FM 8-10-6

MEDICAL EVACUATION IN A THEATER OF OPERATIONS

TACTICS, TECHNIQUES, AND PROCEDURES

HEADQUARTERS, DEPARTMENT OF THE ARMY

DISTRIBUTION RESTRICTION: Approved for public release; distribution is unlimited.

FIELD MANUAL
No. 8-10-6

HEADQUARTERS
DEPARTMENT OF THE ARMY
WASHINGTON, DC, 14 APRIL 2000

MEDICAL EVACUATION IN A THEATER OF OPERATIONS TACTICS, TECHNIQUES, AND PROCEDURES

TABLE OF CONTENTS

			Page
PREFACE			xi
CHAPTER	**1.**	**INTRODUCTION TO THE COMBAT HEALTH SUPPORT SYSTEM AND MEDICAL EVACUATION**	1-1
	1-1.	General	1-1
	1-2.	Threat	1-1
	1-3.	Medical Threat and Medical Intelligence	1-2
	1-4.	Medical Evacuation Versus Casualty Evacuation	1-3
	1-5.	Theater Evacuation Policy	1-4
	1-6.	Factors Determining the Evacuation Policy	1-6
	1-7.	Impact of Evacuation Policy on Combat Health Support Requirements	1-6
	1-8.	Adjustments to the Evacuation Policy	1-7
	1-9.	Planning for Combat Health Support	1-7
	1-10.	Echelons of Medical Care	1-8
	1-11.	Principles of Combat Health Support Operations	1-10
	1-12.	Army Medical Department Battlefield Rules	1-11
	1-13.	Mandated Medical Evacuation Support	1-12
CHAPTER	**2.**	**ECHELONS I AND II MEDICAL EVACUATION**	2-1
	2-1.	General	2-1
	2-2.	Echelon I (Unit Level) Medical Evacuation	2-1
	2-3.	Echelon II Medical Evacuation in the Division	2-4
	2-4.	Echelons I and II Medical Evacuation in the Corps	2-5
CHAPTER	**3.**	**CORPS AND ECHELONS ABOVE CORPS MEDICAL EVACUATION UNITS**	3-1
Section	**I.**	**Medical Evacuation Battalion**	3-1
	3-1.	General	3-1
	3-2.	Assignment	3-1

DISTRIBUTION RESTRICTION: Approved for public release; distribution is unlimited.

*This publication supersedes FM 8-10-6, 31 October 1991.

			Page
	3-3.	Mission and Capabilities	3-1
	3-4.	Organization and Functions	3-2
Section	**II.**	**Medical Company, Ground Ambulance**	3-5
	3-5.	General	3-5
	3-6.	Assignment	3-5
	3-7.	Mission, Capabilities, and Limitations	3-5
	3-8.	Organization and Functions	3-6
Section	**III.**	**Medical Company, Air Ambulance**	3-8
	3-9.	General	3-8
	3-10.	Assignment	3-8
	3-11.	Mission and Capabilities	3-8
	3-12.	Organization and Functions	3-9
CHAPTER	**4.**	**THE MEDICAL EVACUATION SYSTEM**	4-1
	4-1.	General	4-1
	4-2.	Medical Evacuation	4-2
	4-3.	Basic Considerations in Medical Evacuation Operations	4-4
	4-4.	Property Exchange and Patient Movement Items	4-12
	4-5.	Medical Evacuation Tools	4-12
	4-6.	Medical Evacuation Support for Combat Forces in the Offense and Defense	4-15
	4-7.	Medical Evacuation Support for Choices of Maneuver and Enabling Operations	4-20
	4-8.	Medical Evacuation Support in Stability Operations	4-23
	4-9.	Medical Evacuation Support in Support Operations	4-25
	4-10.	Medical Evacuation of Enemy Prisoners of War	4-26
	4-11.	Evacuation and Disposition of Remains	4-27
	4-12.	Aeromedical Evacuation Operations	4-27
	4-13.	Evacuation of Military Working Dogs	4-29
CHAPTER	**5.**	**MEDICAL EVACUATION IN SPECIFIC ENVIRONMENTS**	5-1
	5-1.	General	5-1
	5-2.	Mountain Operations	5-1
	5-3.	Jungle Operations	5-5
	5-4.	Desert Operations	5-7
	5-5.	Extreme Cold Weather Operations	5-15
	5-6.	Medical Evacuation in a Nuclear, Biological, or Chemical Environment	5-17
	5-7.	Naval Operations	5-19
	5-8.	Airborne and Air Assault Operations	5-21
	5-9.	Army Special Operations Forces	5-22

			Page
	5-10.	Military Operations on Urbanized Terrain	5-22
	5-11.	Cross-Forward Line of Own Troops Operations	5-36
	5-12.	Combat Search and Rescue Operations	5-38
	5-13.	Minefield Operations	5-38
CHAPTER	**6.**	**MEDICAL REGULATING**	
	6-1.	General	6-1
	6-2.	Purposes of Medical Regulating	6-1
	6-3.	Medical Regulating Terminology	6-1
	6-4.	Medical Regulating from the Division	6-4
	6-5.	Medical Regulating Within the Combat Zone	6-6
	6-6.	Medical Regulating from the Combat Zone to Echelons Above Corps	6-7
	6-7.	Medical Regulating Within Echelons Above Corps	6-8
	6-8.	Intertheater Medical Regulating	6-8
	6-9.	Mobile Aeromedical Staging Facility	6-9
	6-10.	Limitations of the United States Air Force Theater Aeromedical Evacuation System	6-10
	6-11.	Originating Medical Facility's Responsibilities	6-10
	6-12.	Medical Regulating for Army Special Operations Forces	6-11
CHAPTER	**7.**	**EVACUATION REQUEST PROCEDURES**	
	7-1.	General	7-1
	7-2.	Unit Evacuation Plan	7-1
	7-3.	Determination to Request Medical Evacuation and Assignment of Medical Evacuation Precedence	7-1
	7-4.	Unit Responsibilities in Evacuation	7-2
	7-5.	Types of Medical Evacuation Request Formats and Procedures	7-3
	7-6.	Collection of Medical Evacuation Information	7-3
	7-7.	Preparation of the Medical Evacuation Request	7-4
	7-8.	Transmission of the Request	7-4
	7-9.	Relaying Requests	7-6
CHAPTER	**8.**	**MANUAL EVACUATION**	
	8-1.	General	8-1
	8-2.	Casualty Handling	8-1
	8-3.	General Rules for Bearers	8-2
	8-4.	Manual Carries	8-2
	8-5.	Casualty Positioning	8-3
	8-6.	Categories of Manual Carries	8-4
	8-7.	Special Manual Evacuation Techniques	8-25

			Page
	8-8.	Evacuation from the Bradley Infantry Fighting Vehicle	8-35
	8-9.	Minefield Extraction	8-39
	8-10.	Rules for Surviving Minefields and Acquiring Casualties	8-42
CHAPTER	**9.**	**LITTER EVACUATION**	9-1
	9-1.	General	9-1
	9-2.	Types of Litters	9-1
	9-3.	Dressed Litter	9-9
	9-4.	Using Patient Securing Straps	9-12
	9-5.	General Rules for Litter Bearers	9-12
	9-6.	Use of Spine Boards and the Kendricks Extrication Device	9-13
	9-7.	Travois	9-18
	9-8.	Packsaddle Litter	9-19
	9-9.	Litter Evacuation in Mountain Operations	9-20
	9-10.	Techniques for Litter Evacuation in Mountain Operations	9-20
	9-11.	Types of Litters for Mountain Operations	9-20
	9-12.	Methods of Litter Evacuation in Mountain Operations	9-21
	9-13.	Horizontal Hauling Line	9-25
CHAPTER	**10.**	**EVACUATION PLATFORMS**	10-1
Section	**I.**	**Army Ground Ambulances**	10-1
	10-1.	General	10-1
	10-2.	Ground Ambulances	10-1
	10-3.	Ambulance Driver	10-2
	10-4.	Medical Aidman	10-3
	10-5.	Ambulance Loading and Unloading	10-3
	10-6.	Truck, Ambulances, 4x4, Utility, M996 and M997	10-4
	10-7.	Truck, Ambulance, 1 1/4 Ton, 4x4, M1010	10-15
	10-8.	Truck, Ambulance, 1 1/4 Ton, 6x6, M792	10-15
	10-9.	Buses (Ambulances)	10-17
	10-10.	Carrier, Personnel, Full Tracked, Armored, M113, T113E2	10-19
Section	**II.**	**Nonmedical Vehicles Used for Casualty Evacuation or Medical Evacuation**	10-20
	10-11.	General	10-20
	10-12.	Casualty Transport and Patient Evacuation in a Mass Casualty Situation	10-20
	10-13.	Truck, Cargo/Troop Carrier, 1 1/4, 4x4, M998 (Four-Man Configuration)	10-24
	10-14.	Truck, Cargo/Troop Carrier, 1 1/4 Ton, 4x4, M998 (Two-Man Configuration)	10-25

Page

	10-15.	Truck, Cargo, 5 Ton, 6x6, Wide Bed, and Truck, Cargo, 2 1/2 Ton, 6x6, Wide Bed	10-26
	10-16.	Heavy Expanded, Mobility Tactical Truck, 8x8, Cargo, M977	10-27
	10-17.	Semi-Trailer, Cargo, 22 1/2 Ton, M871	10-28
	10-18.	Truck, Cargo, Medium Tactical Vehicle, Long Wheelbase, 5 Ton, M-1085	10-29
	10-19.	Truck, Cargo, Medium Tactical Vehicle, Light Vehicle Air Drop/ Air Delivery, 5 Ton, M-1093	10-30
	10-20.	Truck Cargo, Light Medium Tactical Vehicle, Light Vehicle Air Drop/Air Delivery, 2 1/2 Ton, M-1081	10-32
Section	**III.**	**Evacuation by Medical Air Ambulances**	10-33
	10-21.	General	10-33
	10-22.	Advantages of Aeromedical Evacuation	10-33
	10-23.	Responsibilities for Loading	10-34
	10-24.	Army Air Ambulances	10-34
	10-25.	Helicopter Landing Sites	10-35
	10-26.	Loading Patients Aboard Rotary-Wing Aircraft	10-41
	10-27.	Loading Patients Aboard the UH-60A Blackhawk	10-41
	10-28.	Loading Patients Aboard the UH-1H/V Iroquois	10-49
Section	**IV.**	**United States Army Nonmedical Aircraft**	10-54
	10-29.	General	10-54
	10-30.	Army Fixed-Wing Aircraft	10-54
	10-31.	U-21/C-12 Aircraft	10-55
	10-32.	Loading Patients Aboard Army Fixed-Wing Aircraft	10-55
	10-33.	The CH-47 (Chinook)	10-56
	10-34.	Loading Patients Aboard the CH-47 (Chinook)	10-56
Section	**V.**	**United States Air Force Aircraft**	10-58
	10-35.	General	10-58
	10-36.	Types of Air Force Transport Aircraft and Units	10-58
	10-37.	Aeromedical Evacuation Civil Reserve Air Fleet Aircraft	10-59
	10-38.	Preparing Aircraft to Receive Patients	10-60
	10-39.	Developing the Loading Plan	10-60
	10-40.	Documentation Required	10-61
	10-41.	Patient Assessment Information	10-62
APPENDIX	**A.**	**EFFECTS OF GENEVA CONVENTIONS ON MEDICAL EVACUATION**	A-1
	A-1.	General	A-1
	A-2.	Distinctive Markings and Camouflage of Medical Facilities and Evacuation Platforms	A-1
	A-3.	Medical Aircraft	A-2
	A-4.	Self-Defense and Defense of Patients	A-2

			Page
	A-5.	Enemy Prisoners of War	A-3
	A-6.	Compliance with the Geneva Conventions	A-3
APPENDIX	**B.**	**MEDICAL EVACUATION ESTIMATE AND PLAN**	B-1
Section	**I.**	**Medical Evacuation Estimate**	B-1
	B-1.	General	B-1
	B-2.	Sample Format for the Medical Evacuation Estimate of the Situation	B-1
Section	**II.**	**Medical Evacuation Annex to the Combat Health Support Plan**	B-12
	B-3.	General	B-12
	B-4.	Sample Format for the Medical Evacuation Annex to the Combat Health Support Plan	B-12
APPENDIX	**C.**	**USE OF DD FORM 1380, US FIELD MEDICAL CARD SAMPLE FORMAT**	C-1
	C-1.	General	C-1
	C-2.	Use of the US Field Medical Card	C-1
	C-3.	Preparation of the Field Medical Card	C-2
	C-4.	Disposition of Field Medical Cards	C-3
	C-5.	Field Medical Record Jacket	C-3
APPENDIX	**D.**	**MEDICAL REENGINEERING INITIATIVE MEDICAL EVACUATION UNITS**	D-1
	D-1.	General	D-1
	D-2.	Headquarters and Headquarters Detachment, Medical Evacuation Battalion	D-1
	D-3.	Medical Company, Air Ambulance	D-2
	D-4.	Medical Company, Ground Ambulance	D-3
APPENDIX	**E.**	**USE OF THE HIGH PERFORMANCE HOIST IN MEDICAL EVACUATION OPERATIONS**	E-1
Section	**I.**	**Crew Responsibilities**	E-1
	E-1.	General	E-1
	E-2.	Primary Crew Responsibilities	E-1
Section	**II.**	**Intercrew Communications**	E-2
	E-3.	General	E-2
	E-4.	Intercrew Communications	E-2
Section	**III.**	**Employment**	E-4
	E-5.	General	E-4
	E-6.	Hoist Rescue Operational Phases	E-4

			Page
Section	**IV.**	**Environmental Factors**	E-5
	E-7.	General	E-5
	E-8.	Water Recovery Operations	E-5
	E-9.	Land Operations	E-7
	E-10.	Night Recovery Operations	E-8
Section	**V.**	**Inert Patient Recoveries**	E-9
	E-11.	General	E-9
	E-12.	Procedural Guidance	E-9
Section	**VI.**	**Meteorological and Terrain Factor**	E-10
	E-13.	General	E-10
	E-14.	Performance Planning	E-10
	E-15.	Mountain Operations	E-10
	E-16.	Jungle Operations	E-11
	E-17.	Extreme Cold Weather Operations	E-12
Section	**VII.**	**Safety and Emergency Procedures for Hoist Missions**	E-14
	E-18.	General	E-14
	E-19.	Safety Factors	E-14
	E-20.	Emergency Procedures	E-20
	E-21.	Tactical Considerations	E-21
Section	**VIII.**	**Forest Penetrator**	E-21
	E-22.	General	E-21
	E-23.	Configuration of the Forest Penetrator	E-22
	E-24.	Application	E-22
	E-25.	Employment of the Forest Penetrator	E-22
Section	**IX.**	**SKED Rescue System**	E-25
	E-26.	General	E-25
	E-27.	Configuration	E-25
	E-28.	Operation of the SKED Litter	E-26
	E-29.	Maintenance of the SKED Litter	E-30
Section	**X.**	**Rescue (Stokes) Litter**	E-31
	E-30.	General	E-31
	E-31.	Configuration	E-31
	E-32.	Function	E-31
	E-33.	Maintenance	E-34
Section	**XI.**	**Poleless Semirigid Litter**	E-34
	E-34.	General	E-34
	E-35.	Employment of the Poleless Semirigid Litter	E-34
	E-36.	Function	E-35
	E-37.	Maintenance	E-36
Section	**XII.**	**Survivor's Sling (Horse Collar) and Cable Weight Cover**	E-36
	E-38.	General	E-36
	E-39.	Configuration	E-36
	E-40.	Function	E-37

			Page
	E-41.	Maintenance	E-37
	E-42.	Modifications	E-38
Section	**XIII.**	**Hoisting Vest**	E-38
	E-43.	General	E-38
	E-44.	Configuration	E-38
	E-45.	Employment of the Hoisting Vest	E-39
	E-46.	Maintenance of the Hoisting Vest	E-41
APPENDIX	**F.**	**THE USE OF SMOKE AND OBSCURANTS IN MEDICAL EVACUATION OPERATIONS**	F-1
	F-1.	General	F-1
	F-2.	Employment of Smoke and Obscurants	F-1
	F-3.	Geneva Conventions and the Use of Smoke and Obscurants in Medical Evacuation Operations	F-2
	F-4.	Use of Smoke in Aeromedical Evacuation and Hoist Rescue Operations	F-3
	F-5.	Employment of Smoke in Ground Medical Evacuation Operations	F-4
APPENDIX	**G.**	**TACTICAL STANDING OPERATING PROCEDURE**	G-1
	G-1.	General	G-1
	G-2.	Purpose of the Tactical Standing Operating Procedure	G-1
	G-3.	Format for the Tactical Standing Operating Procedure	G-1
	G-4.	Sample Tactical Standing Operating Procedure (Sections)	G-2
	G-5.	Sample Tactical Standing Operating Procedure (Annexes)	G-3
APPENDIX	**H.**	**PATIENT REGULATING FORMS SAMPLE FORMAT**	H-1
Section	**I.**	**Use of DD Form 600, Patient's Baggage Tag**	H-1
	H-1.	General	H-1
	H-2.	Preparation of DD Form 600	H-1
	H-3.	Receipt for Checked Baggage	H-1
	H-4.	Disposition of DD Form 600	H-1
Section	**II.**	**Use of DD Form 601, Patient Evacuation Manifest**	H-3
	H-5.	General	H-3
	H-6.	Preparation of DD Form 601	H-3
	H-7.	Disposition of DD Form 601	H-5
Section	**III.**	**Use of DD Form 602, Patient Evacuation Tag**	H-5
	H-8.	General	H-5
	H-9.	Preparation of DD Form 602	H-5
	H-10.	Continued Use of DD Form 602	H-6
	H-11.	Disposition of DD Form 602	H-6

			Page
APPENDIX	**I.**	**SAMPLE FORMAT FOR MEDICAL EVACUATION MISSION COMPLETION RECORD**	I-1
APPENDIX	**J.**	**PROCEDURES FOR LITTER EVACUATION TRAINING**	J-1
	J-1.	General	J-1
	J-2.	Basic Guides for Training Litter Bearers	J-1
	J-3.	Litter Commands	J-1
	J-4.	Formation for Instruction	J-2
	J-5.	Procedures to Procure, Ground, Open, Close, and Return the Litter	J-2
	J-6.	Procedures for Loading a Patient onto a Litter	J-6
	J-7.	Procedures for Carrying a Loaded Litter	J-15
	J-8.	Procedures for Surmounting Obstacles	J-21
APPENDIX	**K.**	**SELECTION OF PATIENTS FOR AEROMEDICAL EVACUATION AND PATIENT CLASSIFICATION CODES AND PRECEDENCE**	K-1
	K-1.	General	K-1
	K-2.	Selection of Patients for Aeromedical Evacuation	K-1
	K-3.	Briefing of Patients Prior to Aeromedical Evacuation	K-3
	K-4.	International Standardization Agreement Codes	K-3
	K-5.	International Standardization Evacuation Precedence	K-3
	K-6.	Patient Classification	K-5
	K-7.	United States Air Force Evacuation Precedence	K-5
APPENDIX	**L.**	**RISK MANAGEMENT**	L-1
	L-1.	General	L-1
	L-2.	Types of Risks	L-1
	L-3.	Hazards	L-1
	L-4.	Risk Management Steps	L-1
	L-5.	Risk Management Principles	L-3
	L-6.	Risk Assessment	L-3
	L-7.	Factors to Consider in Risk Assessment	L-6
APPENDIX	**M.**	**MULTINATIONAL OPERATIONS**	M-1
	M-1.	General	M-1
	M-2.	Alliances and Coalitions	M-1
	M-3.	Command Structure of Multinational Forces	M-1
	M-4.	Rationalization, Standardization, and Interoperability	M-3

			Page
	M-5.	Combat Health Support Issues	M-5
	M-6.	Combat Health Support Considerations	M-5
APPENDIX	**N.**	**LEADER CHECKLISTS**	N-1
	N-1.	Sample Format of a Command Post Operations Checklist	N-1
	N-2.	Site Selection and Establishing Unit Area Checklist	N-3
	N-3.	Precombat Checklists	N-4
APPENDIX	**O.**	**COMBATTING TERRORISM AND FORCE PROTECTION**	O-1
	O-1.	General	O-1
	O-2.	Combatting Terrorism	O-1
	O-3.	Terrorism Considerations	O-1
	O-4.	Antiterrorism Assessment	O-2
APPENDIX	**P.**	**STRATEGIC DEPLOYABILITY DATA**	P-1
	P-1.	General	P-1
	P-2.	Strategic Deployability Data	P-1
APPENDIX	**Q.**	**EVACUATION CAPABILITIES OF UNITED STATES FORCES**	Q-1
	Q-1.	General	Q-1
	Q-2.	Evacuation Capabilities of United States Air Force Aircraft	Q-1
	Q-3.	Evacuation Capabilities of United States Army Vehicles and Aircraft	Q-2
	Q-4.	Railway Car Capabilities	Q-2
	Q-5.	Evacuation Capabilities of United States Navy Ships, Watercraft, and Rotary-Wing Aircraft	Q-2
GLOSSARY			Glossary-1
REFERENCES			References-1
INDEX			Index-1

PREFACE

This field manual (FM) provides the philosophy of and doctrine for medical evacuation in a theater of operations (TO). Tactics, techniques, and procedures for accomplishing the medical evacuation of sick, injured, or wounded soldiers are included. Medical evacuation, with the provision of en route medical care, is a vital link in the continuum of care from the point of injury through the combat health support (CHS) system to medical treatment facilities (MTFs) with the required definitive or restorative medical treatment capabilities. This publication is intended for use by medical and nonmedical unit commanders and their staffs. This publication also discusses the following:

- Coordination requirements for and use of nonmedical transportation assets to accomplish the medical evacuation mission. These nonmedical assets may be used in a mass casualty situation or other circumstances when the available medical evacuation assets are overwhelmed.

- Definitive guidance for the performance of hoist rescue missions.

- Techniques for evacuating casualties from minefields.

The information in this publication on manual and litter carries may be used to instruct personnel in the proper methods of handling and moving casualties.

The use of the term *continental United States (CONUS)* includes the continental United States (US), Hawaii, Alaska, and its territories and possessions.

The proponent of this publication is the US Army Medical Department Center and School (AMEDDC&S). Send comments and recommendations on Department of the Army (DA) Form 2028 directly to the **Commander, AMEDDC&S, ATTN: MCCS-FCD-L, 1400 East Grayson Street, Fort Sam Houston, Texas 78234-6175**.

Unless this publication states otherwise, masculine nouns and pronouns do not refer exclusively to men.

The staffing and organizational structure presented in this publication reflects those established in living tables of organization and equipment (LTOEs) which were current at the time of publication of this manual. However, such staffing is subject to change to comply with manpower requirements criteria outlined in Army Regulation (AR) 71-32 and can be subsequently changed by your modified table of organization and equipment (MTOE).

This publications implements the following North Atlantic Treaty Organization (NATO) Standardization Agreements (STANAGs), American, British, Canadian, and Australian (ABCA) Quadripartite Standardization Agreements (QSTAGs), and Air Standardization Agreements (AIR STDs):

Title	STANAG	QSTAG	AIR STD
Marking of Military Vehicles		512	

Title	STANAG	QSTAG	AIR STD
Stretchers, Bearing Brackets, and Attachment Supports	2040		
Stretchers		519	
Medical Employment of Air Transport in the Forward Area	2087	529	
Medical and Dental Supply Procedures	2128		
Medical Materiel Management During Patient Evacuation		435	
Minimum Labelling Requirements for Medical Materiel		436	
Documentation Relative to Medical Evacuation, Treatment, and Cause of Death of Patients	2132	470	
Morphia Dosage and Casualty Marking	2350	230	
Regulations and Procedures for Road Movement and Identification of Movement Control and Traffic Control Personnel and Agencies	2454		
Orders for the Camouflage of the Red Cross and the Red Crescent on Land in Tactical Operations	2931		
Aeromedical Evacuation	3204		
Aeromedical Evacuation by Helicopter			44/36A
Selection, Priorities, and Classes of Conditions for Aeromedical Evacuation			61/71

When amendment, revision, or cancellation of this publication is proposed which will affect or violate the international agreements concerned, the preparing agency will take appropriate reconciliatory action through international standardization channels. These agreements are available from the Department of Defense (DOD) Single Stock Point, Building 4, Section D, 700 Robbins Avenue, Philadelphia, Pennsylvania 19111-5094.

The use of trade or brand names in this publication does not imply endorsement by the DOD, but is intended only to assist in the identification of a specific product.

CHAPTER 1

INTRODUCTION TO THE COMBAT HEALTH SUPPORT SYSTEM AND MEDICAL EVACUATION

1-1. General

a. The purpose of the CHS system is to conserve the fighting strength. This includes both the deployed force and the sustaining base. Consistent with military and logistical operations, CHS operates in a continuum across strategic, operational, and tactical levels. In a force projection army, the CHS system supports a force which is rapidly deployable, lethal, versatile, and expandable. The Force XXI battle space will be characterized by dispersion, lightning-quick military operations, increased mobility requirements, rapid task organization, and lengthening lines of communication (LOC). The CHS system must be strategically, operationally, and tactically agile in order to be responsible to the broad range of worldwide requirements.

b. Medical commanders must effectively use their resources to treat, evacuate, and, when possible, return to duty (RTD) sick, injured, and wounded soldiers.

1-2. Threat

a. The post-Cold War international environment presents the US with security challenges that are unprecedented in ambiguity, diversity, risk, and opportunity. For many decades, nearly all US intelligence analysis was directed toward one country. The Soviet strategic doctrine and tactics for conducting offensive and defensive operations were well understood and confident estimates of Soviet weapons capabilities existed. Further, during the Cold War, the US National Security Strategy carefully rationed the use of military force to only those conflicts which promoted democracy over communism. The world was a dangerous place, but the superpowers were held in check by the knowledge that each had the capability to destroy the planet.

b. The end of the Cold War signaled the emergence of a "New World Order." Unfortunately, reality has proven that this new order is neither new nor orderly. The old forces of adventurism, nationalism, and separatism have reappeared, often with violent and unpredictable consequences. Coupled with this is a new National Security Strategy, still in its infancy, which allows for US military involvement in complicated scenarios such as peacemaking operations, nation assistance, and humanitarian assistance.

c. With the diminished threat of a large-scale military confrontation, military force size and capabilities are being affected in countries throughout the world. Many of the major military powers are moving toward smaller, better-equipped, and better-trained forces. Developed nations have also improved military capabilities through greater access to military system technologies and the increased availability of a wide range of advanced military equipment on the international market. How well these nations are able to integrate advanced weapons systems for a high technology status may increase their leverage over another regional power. While high technology weapons will be available, either through direct purchase or through third party countries, many hostile forces, especially paramilitary or insurgent forces, will maintain a low technology inventory. This low technology weapons environment does not translate into a low threat environment for US forces. Small hostile forces often demonstrate a creativity and flexibility for

use of low technology weapons that is unexpected, thereby compounding the problems associated with assessing their capabilities. The implication for the US Army is clear. United States forces must be continually prepared to face a variety of threat forces, many with credible military capabilities.

d. The Army Medical Department (AMEDD) views threat from two perspectives. Both viewpoints are rooted in a potential adversary's capability to conduct combat operations. The first of these viewpoints is similar to the way threat is viewed in the Army. This is a potential adversary's capability to disrupt CHS operations on the battlefield. The second is the AMEDD's responsibility to anticipate and prevent the degradation of soldiers' performance by diseases, environmental hazards, and military capabilities. This second perspective is called the *medical threat*. Soldiers are the targets of these threats. Weapons or environmental conditions that will generate casualties beyond the capability of the CHS system are considered to be significant medical threats. (The medical threat is further discussed in paragraph 1-3.)

e. For a discussion of CHS operations in stability operations and support operations, refer to FM 8-42.

1-3. Medical Threat and Medical Intelligence

a. The medical threat is a composite of all ongoing or potential enemy actions and environmental conditions that may render a soldier combat ineffective. The soldier's reduced effectiveness results from sustained wounds, injuries, stress-induced performance deterioration, or diseases. The elements of the medical threat include—

- Diseases endemic to the area of operations (AO).
- Environmental factors (heat, cold, humidity, and high altitude).
- Battle injuries.
- Biological warfare (BW) agents.
- Chemical warfare (CW) agents.
- Directed-energy (DE) sources.
- Blast effect munitions.
- Flame and incendiary weapons.
- Nuclear weapons.
- Toxic industrial materiel/chemicals (to include radioactive material).
- Combat stress and continuous operations.

- Level of compliance with the Law of Land Warfare and the Geneva Conventions (Appendix A) requirements regarding *respect and protection* of medical personnel and their patients, MTFs, and medical vehicles and aircraft.

b. In order to develop the CHS estimate and plan (Appendix B), the CHS planner obtains updated medical intelligence through intelligence and other channels. Medical intelligence is the product resulting from the collection, evaluation, and analysis, integration, and interpretation of all available general health and bioscientific information. Medical intelligence is concerned with one or more aspects of foreign nations or the AO. Until medical information is processed (ordinarily at the national level by the Armed Forces Medical Intelligence Center [AFMIC]), it is not considered to be intelligence.

c. For additional information on medical intelligence, refer to FM 8-10-8.

1-4. Medical Evacuation Versus Casualty Evacuation

a. Medical evacuation is the timely, efficient movement and en route care by medical personnel of the wounded, injured, or ill persons from the battlefield and/or other locations to MTFs. The provision of en route care on medically equipped vehicles or aircraft enhances the patient's potential for recovery and may reduce long-term disability by maintaining the patient's medical condition in a more stable manner.

(1) The gaining MTF is responsible for arranging for the evacuation of patients from the lower echelon of care. For example, Echelon II medical units are responsible for evacuating patients from Echelon I MTFs.

(2) Medical evacuation begins when medical personnel receive the wounded, injured, or ill soldier and continues as far rearward as the patient's medical condition warrants or the military situation requires.

b. Casualty evacuation (CASEVAC) is a term used by nonmedical units to refer to the movement of casualties aboard nonmedical vehicles or aircraft.

CAUTION

Casualties transported in this manner do not receive en route medical care; if the casualty's medical condition deteriorates during transport, an adverse impact on his prognosis and long-term disability may result.

(1) If dedicated medical vehicles or aircraft are available, casualties should be evacuated on these conveyances to ensure they receive en route medical care.

(2) If available medical evacuation resources are overwhelmed (such as in a mass casualty situation), some casualties (usually with minimal or nonlife-threatening injuries) may be required to be transported on nonmedical vehicles. Medical personnel on-site will determine the priority for evacuation by available medical vehicles and aircraft.

NOTE

When possible, nonmedical vehicles/aircraft transporting casualties should be augmented with a combat medic or combat lifesaver. (On nonmedical aircraft, sufficient space may not be available to permit a caregiver to accompany the casualties.) The type of en route surveillance and medical care/first aid provided is limited by the following factors:

- Skill level of the individual providing care.

(The combat medic is military occupational specialty [MOS]-qualified to provide emergency medical treatment [EMT]; the combat lifesaver is trained to provide enhanced first aid.) The combat medic can provide emergency medical intervention, whereas the combat lifesaver can only monitor the casualty and ensure that the basic lifesaving first-aid tasks are accomplished.

- Equipment available.

- Number of casualties being transported.

- Accessibility of the casualties. (If the nonmedical ground vehicle is loaded with the maximum number of casualties, the combat medic/combat lifesaver will not be able to attend to the casualties while the vehicle is moving. At best, if the condition of a casualty deteriorates and emergency measures are required, the vehicle will have to be stopped to permit care to be given.)

1-5. Theater Evacuation Policy

a. The theater evacuation policy is established by the Secretary of Defense, with the advice of the Joint Chiefs of Staff and upon the recommendation of the theater commander. The policy establishes, in number of days, the maximum period of noneffectiveness (hospitalization and convalescence) that patients may be held within the theater for treatment. This policy does not mean that a patient is held in the TO for the entire period of noneffectiveness. A patient who is not expected to be ready for RTD within the number of days established in the theater evacuation policy is evacuated to the CONUS or other safe haven. This is done providing that the treating physician determines that such evacuation will not aggravate the patient's

disabilities or medical condition. For example, a theater evacuation policy of 15 days does not mean that a patient is held in the theater for 14 days and then evacuated. Instead, it means that a patient is evacuated as soon as possible after the determination is made that he cannot be returned to duty within 15 days following admission to an Echelon III or above hospital.

b. To the degree that unplanned for increases in patients occur (due perhaps to an epidemic or heavy combat casualties), a temporary reduction in the policy may be necessary. This reduction is used to adjust the volume of patients being held in the TO hospital system. A reduction in the evacuation policy increases the number of patients requiring evacuation out-of-theater and increases the requirement for evacuation assets. This action is necessary to relieve the congestion caused by the patient increases. A decrease in the theater evacuation policy increases the evacuation asset requirements.

c. The time period established by the theater evacuation policy starts on the date the patient is admitted to the first hospital (combat zone [CZ] or echelons above corps [EAC]). The total time a patient is hospitalized in the theater (including transit time between MTFs) for a single, uninterrupted episode of illness or injury should not exceed the number of days stated in the theater evacuation policy. Though guided by the evacuation policy, the actual selection of a patient for evacuation is based on clinical judgment as to the patient's ability to tolerate and survive the movement to the next echelon of hospitalization. An exception to the theater evacuation policy may be required with respect to special operations forces (SOF) personnel. This exception may be required to retain low density MOS skills within the theater. Retaining these personnel within the theater for an extended period of time is possible if the medical resources are available within the theater to treat their injuries and provide for convalescence and rehabilitation. If retention within the theater would result in a deterioration of their medical condition or would adversely impact on their prognosis for full recovery, they are evacuated from the theater for definitive care.

d. The evacuation policy has different meanings for different personnel. For example, to the—

(1) Physicians and dentists engaged in direct patient treatment and decisions relating to patient disposition, it means that there is a maximum period within which clinical staffs may complete the necessary treatment needed to return the patient to full duty within the theater. If the theater policy is 15 days and full RTD can be predicted within that time, the patient is retained in the theater hospital system. If the patient cannot be returned to full duty within 15 days, the patient is evacuated out-of-theater as early as clinically prudent.

(2) Combat health support planner, it means that he can compute the beds required in theater, if given the theater evacuation policy and other factors. This can be translated into the type, mix, number, and distribution of hospital beds required in the theater.

(3) Nonmedical logistician, it means, in part, that he can estimate his total obligation to support this system.

(4) United States Air Force (USAF) planner, it means that he can accurately plan the USAF aeromedical evacuation (AE) requirements for both intra- and intertheater patient movements.

(5) Combat health support operator, it means that he has a management tool which, when properly adjusted and used, provides the balance between patient care and tactical support requirements. The CHS operator is able to tailor a CHS package specifically designed to handle the patient workloads, with maximum benefit to the patients and with maximum economy of available resources.

1-6. Factors Determining the Evacuation Policy

To fully understand how the theater evacuation policy affects CHS operations, the CHS operator should be aware of the factors that influence the establishment of this policy. The following factors are used in determining the evacuation policy:

a. Nature of Tactical Operations. A major factor is the nature of the combat operations. Will they be operations of short duration and with a low potential for violence? Will they be operations of long duration with significant combat operations? Will weapons of mass destruction (WMD) (to include nuclear, biological, and chemical [NBC] or DE weapons) be employed? Will only conventional weapons be used? Is a static combat situation expected? Is there a significant threat of terrorist activities? Are the majority of patients anticipated to be disease and nonbattle injury (DNBI) patients or those with combat-related trauma?

b. Number/Type of Patients. Another factor is the number and types of patients anticipated and the rate of patient RTD. Admission rates vary widely in different geographical areas of the world and in different types of military operations.

c. Evacuation Means. The means (quantity and type of transportation) available for evacuation of patients from the TO to CONUS is an essential factor impacting on the evacuation policy.

d. Availability of Replacements. The capability of CONUS to furnish replacements to the theater is another consideration. For each patient who is evacuated from the theater to CONUS, a fully trained and equipped replacement must be provided. During a small-scale conflict overseas, the CONUS replacement capability is much greater than when compared to a large-scale conflict such as World War II.

e. Availability of In-Theater Resources. Limitations of all CHS resources (such as insufficient number and types of CHS units in EAC to support the CZ and an insufficient amount of combat health logistics [CHL] and nonmedical logistics) will have an impact on the theater evacuation policy. The availability, type, and timing of engineering support is also a consideration. The more limitations (or shortages), the shorter the theater evacuation policy.

1-7. Impact of Evacuation Policy on Combat Health Support Requirements

a. A short theater evacuation policy—

- Results in fewer hospital beds required in the theater and a greater number of beds required elsewhere.

- Creates a greater demand for intertheater USAF evacuation resources. (A shortened intratheater evacuation policy would likewise increase the number of airframes required in the theater.)

- Increases the requirements for replacements to meet the rapid personnel turnover which could be expected, especially in combat units. (The impact this would have on both intra- and intertheater transportation and other requirements must also be considered.)

b. A longer theater evacuation policy—

- Results in a greater accumulation of patients and a demand for a larger CHS infrastructure in the theater. It decreases bed requirements elsewhere.

- Increases the requirements for CHL (medical supplies and equipment and medical maintenance) and nonmedical logistics support.

- Increases the requirements for hospitals, engineer support, and all aspects of base development for CHS. (It demands the establishment of a larger number of hospitals in EAC.)

- Provides for a greater proportion of patients to RTD within the theater, and thus reduces the loss of experienced manpower.

c. The evacuation policy has no impact on the patient stabilization period for movement. This period is known as the *evacuation delay*. It is the period of time planned for between the time of patient reporting and the time of AE of the patient to the next echelon of care. Evacuation delays normally range from 24 to 72 hours and are designated by the theater surgeon.

1-8. Adjustments to the Evacuation Policy

When patients are received at a rather constant rate, the evacuation policy at a specific echelon may be adjusted to retain or RTD those patients who do not require specialized treatment in EAC hospitals. However, when increased patient loads are anticipated, the intratheater evacuation policy must be adjusted to make additional beds available for current and anticipated needs. As a result, a larger proportion of patients admitted in the CZ are evacuated to EAC facilities much earlier than under normal conditions. The displacement of hospitals temporarily reduces the number of beds available and may result in a greater number of patients being evacuated out of the CZ during the period of relocation.

1-9. Planning for Combat Health Support

a. While the *responsibility* for what is or is not done is the tactical commander's alone, he must rely on his staff and his subordinate commanders to execute his decisions. It is imperative that the CHS planner be involved in the initial stages of the planning process. A thorough understanding of the tactical commander's plan is necessary for CHS commanders to maintain CHS to sustain the tactical commander during the absence of orders and communications. Combat health support planning is an intense and demanding process. The planner must know—

- What each supported element will do.
- When it will be done.
- How it will be done.
- What the organic medical capability is of the supported units.

b. The planner must foresee actions beforehand to be able to plan for positive and responsive support to each element supported. He must be prepared to meet the requirements for all of the CHS functional areas. The functional areas are—patient evacuation and medical regulating; hospitalization; medical treatment (to include area medical support); preventive medicine (PVNTMED) services; CHL to include blood management; medical laboratory services; dental services; veterinary services; combat stress control (CSC); and command, control, communications, computers, and intelligence (C4I).

c. Planning must be proactive rather than reactive. Commanders must be able to allocate CHS resources as tactical situations change.

d. On the integrated battlefield, medical units can anticipate situations in which large numbers of patients are produced in a relatively short period of time. These mass casualty situations will exceed local CHS capabilities. (Refer to FM 8-10-1 for an in-depth discussion on mass casualty operations.)

e. For additional information on CHS planning, refer to FMs 8-42, 8-55, and 101-5 and Appendix B of this manual.

1-10. Echelons of Medical Care

Combat health support is arranged in *echelons of care*. Each echelon reflects an increase in medical capabilities while retaining the capabilities found in the preceding echelon.

a. *Echelon I*. The first medical care a soldier receives is provided at Echelon I (also referred to as unit-level medical care). This echelon of care includes—

- Immediate lifesaving measures.
- Disease and nonbattle injury prevention.
- Combat stress control preventive measures.
- Patient collection.
- Medical evacuation from supported units to supporting MTFs.
- Treatment provided by designated combat medics or treatment squads (battalion aid stations [BASs]) in conventional forces. In Army special operations forces (ARSOF), Echelon I treatment

is provided by special operations combat medics (SOCMs), special forces medical sergeants (SFMSs), or physicians or physician assistants (PAs) at forward operating bases (FOBs), special forces (SF) operating bases (SFOBs), or in joint special operations task force (JSOTF) areas of responsibility (AOR). (Major emphasis is placed on those measures necessary for the patient to RTD, or to stabilize him and allow for his evacuation to the next echelon of care. These measures include maintaining the airway, stopping bleeding, preventing shock, protecting wounds, immobilizing fractures, and performing other emergency measures, as indicated.)

(1) The combat medic is assisted in his duties by nonmedical personnel performing first-aid procedures. First aid is administered by an individual (self-aid, buddy aid) and by the combat lifesaver.

(*a*) *Self-aid and buddy aid.* Each individual soldier is trained to be proficient in a variety of specific first-aid procedures. These procedures include aid for chemical casualties with particular emphasis on lifesaving tasks. This training enables the soldier or a buddy to apply first aid to alleviate a life-threatening situation.

(*b*) *Combat lifesaver*. The combat lifesaver is a member of a nonmedical unit selected by the unit commander for additional training beyond basic first-aid procedures. A minimum of one individual per squad, crew, team, or equivalent-sized element should be trained. The primary duty of this individual does not change. The additional duty of the combat lifesaver is to provide enhanced first aid for injuries (based on his training) before the combat medic arrives. The combat lifesaver's training is normally provided by medical personnel assigned, attached, or in direct support (DS) of the unit. The training program is managed by the senior medical person designated by the commander. Members of SF operational detachment A (ODA) teams receive enhanced first-aid training at the combat lifesaver level.

(2) Echelon I medical treatment is provided by the combat medic or by the physician, PA, or medical specialist in the BAS.

(*a*) Emergency medical treatment (immediate far forward care) consists of those lifesaving steps that do not require the knowledge and skill of a physician. The combat medic is the first individual in the CHS chain who makes medically substantiated decisions based on medical MOS-specific training. (The SFMS receives more advanced training than the conventional force combat medic, as the SFMS may be required to maintain patients for longer periods of time under austere conditions.)

(*b*) The physician and the PA in a treatment squad are trained and equipped to provide advanced trauma management (ATM) to the battlefield casualty. This element also conducts routine sick call when the tactical situation permits. Like elements provide this echelon of medical care to division, corps, and EAC units.

(*c*) Echelon I care is provided by—

- Medical platoons/sections of combat and combat support (CS) battalions/ squadrons.

- Divisional medical companies.

- Corps and EAC area support medical companies (ASMCs).

- Special forces medical sergeants, PAs, and physicians assigned to special forces groups (SFGs), special operations support battalions (SOSBs), and SOCMs, PAs, and physicians assigned to Ranger regiments.

b. Echelon II. At this echelon, care is rendered at the clearing stations (division or corps) which are operated by the treatment platoon of the medical company. Here the casualty is examined and his wounds and general status evaluated to determine his treatment and evacuation precedence, as a single casualty among other casualties. Emergency medical treatment, including beginning resuscitation is continued and, if necessary, additional emergency measures are instituted, but they do not go beyond the measures dictated by immediate necessities. The clearing station has a whole blood capability and limited x-ray, laboratory, and dental support. Echelon II CHS also includes PVNTMED and CSC assets in the division (main support medical company [MSMC]) and in the corps (area support medical battalion [ASMB]). Those patients who can RTD within 1 to 3 days are held for treatment. These functions are performed typically by company-sized medical units organic to brigades, divisions, and ASMBs. Patients who are nontransportable due to their medical condition may receive immediate surgical care from a forward surgical team (FST) collocated with a division or corps medical company. (A discussion of the FST is contained in FM 8-10-25.) (Army special operations forces units do not have organic Echelon II resources and are dependent upon theater assets for this echelon of care. Support is provided on an area support basis by the ASMB.)

c. Echelon III. At this echelon, the patient is treated in an MTF staffed and equipped to provide resuscitation, initial wound surgery, and postoperative treatment. Those patients who are expected to RTD within the theater evacuation policy are regulated to a facility that has the capability for reconditioning and rehabilitation.

d. Echelon IV. At Echelon IV, the patient is treated in a hospital staffed and equipped for general and specialized medical and surgical care to stabilize the patient for further evacuation out of the theater, or for reconditioning and rehabilitation prior to RTD.

e. Echelon V. Echelon V medical care is found in support-base hospitals. Mobilization requires expansion of military hospital capacities and the inclusion of Department of Veterans Affairs (VA) and civilian hospital beds in the CHS system to meet the increased demands created by the evacuation of patients from the TO. The support-base hospitals represent the most definitive medical care available within the CHS system.

1-11. Principles of Combat Health Support Operations

a. Conformity. Conformity with the tactical plan is the most fundamental element for effectively providing CHS. Only by participating in the development of the operation plan (OPLAN) can the CHS planner ensure adequate CHS on the battlefield at the right time and place.

b. Continuity. Combat health support must be continuous since the interruption of treatment may cause an increase in morbidity and mortality. Procedures are standardized at each organizational level to

ensure that all required medical treatment at that echelon is accomplished. *No patient is evacuated any farther to the rear than his physical condition or the military situation requires*.

c. Control. Control of CHS resources must rest with the medical commander. Combat health support staff officers must be proactive and keep their commanders apprised of the impact of future operations on CHS assets. The CHS system must be responsive to a rapidly changing battlefield and must support the tactical plan in an effective manner. The medical commander must be able to tailor medical organizations and direct them to focal points of demand throughout his AO. For this reason, CHS units normally maintain unit integrity for command and control (C2). Treatment performed at each echelon of the CHS system must be commensurate with available CHS resources. Since these resources are limited, it is essential that their control be retained at the highest CHS echelon consistent with the tactical situation.

d. Proximity. The location of CHS assets in support of combat operations is dictated by the tactical situation (mission, enemy, terrain, troops, time available, and civilian considerations [METT-TC]) factors, the time and distance factor, and the availability of evacuation resources. The speed with which medical treatment is initiated is extremely important in reducing morbidity and mortality. Medical evacuation time must be minimized by the efficient allocation of resources and the judicious location of MTFs. The MTF cannot be located so far forward that it interferes with the conduct of combat operations or is subjected to enemy interference. Conversely, it must not be located so far to the rear that medical treatment is delayed due to the lengthened evacuation time.

e. Flexibility. Since a change in tactical plans or operations may require redistribution or relocation of medical resources, the CHS plan must be flexible. The medical commander must be able to shift CHS resources to meet the changing requirements. No more medical resources should be committed nor MTFs established than are required to support expected patient densities. When the patient load exceeds the means available for treatment, it may be necessary to give priority to those patients who can RTD the soonest rather than those who are more seriously injured. This ensures the manning of the tactical commander's weapons systems.

f. Mobility. Since contact with supported units must be maintained, CHS elements must have mobility comparable to that of the units they support. Mobility is measured by the extent to which a unit can move its personnel and equipment with organic transportation. When totally committed to patient care, a CHS unit can regain its mobility only by immediate patient evacuation. When the mobility of the unit is jeopardized by the accumulation of patients, it may be necessary to leave a small holding element with the patient.

1-12. Army Medical Department Battlefield Rules

The AMEDD has developed CHS battlefield rules to aid in establishing priorities and in resolving conflicts between competing priorities within CHS activities.

a. These battlefield rules are (in order of their priority) to—

- Maintain a medical presence with the soldier.

- Maintain the health of the command.
- Save lives.
- Clear the battlefield.
- Provide state-of-the-art care.
- Return soldiers to duty as early as possible.

b. These rules are intended to guide the CHS planner to resolve system conflicts encountered in designing and coordinating CHS operations. Although medical personnel seek always to provide the full scope of CHS in the best possible manner, during every combat operation there are inherent possibilities of conflicting support requirements. The planner or operator applies these rules to ensure that the conflicts are resolved appropriately.

c. The rationale for the battlefield rules is based on the prevention of disease and injury and the evolving clinical concept which demonstrates that with good medical care the trauma victim will probably survive the injury.

(1) Good medical care means that the injured soldier receives prompt medical attention; he is adequately resuscitated and stabilized; and stabilization is maintained during evacuation.

(2) The goal of resuscitation and stabilization is the restoration of vascular volume with adequate oxygen delivery to the cells. This means that the patient's bodily systems have available the amount of oxygen demanded to ensure viability. The patient can then be evacuated over a greater distance to a rearward MTF with time being less of a major concern to save life and limb.

(3) Good medical care and stabilization prior to evacuation are major aspects in determining whether the patient survives, provided stabilization is sustained during evacuation. Early medical care with the ability to adequately stabilize the patient must be available with less delay from the time of injury than it has ever been in the past. An enhanced capability to sustain stabilization during evacuation must also be provided.

1-13. Mandated Medical Evacuation Support

When an aircraft is reported down and has sustained damage, a medical evacuation platform (either ground or air) is required to pick up the crew of the aircraft. Initial EMT is provided, if required, and en route medical care sustains the injured crew members during the evacuation.

CHAPTER 2

ECHELONS I AND II MEDICAL EVACUATION

2-1. General

a. The ground ambulance squad is the basic module for evacuation at the unit and division levels. This squad provides patient evacuation throughout the division, corps, and EAC and ensures the continuity of care en route. Ambulance squads are organic to the medical platoon or section in combat and CS units and to the division support command (DISCOM) medical companies. This squad is also a part of the ASMCs in corps and EAC.

b. Area medical support is provided to those units (which do not have organic medical evacuation resources) operating in the division, corps, or EAC AO. To ensure that adequate medical evacuation support is provided, prior planning and coordination must be accomplished. Medical evacuation support is coordinated with supported units to ensure the timely response to evacuation requests.

2-2. Echelon I (Unit Level) Medical Evacuation

a. The medical platoon organic to the headquarters and headquarters company (HHC) of the combat maneuver battalion provides medical evacuation support for the battalion. Their mission is to provide this support for the subordinate elements of the battalion. They also provide support to other elements (which do not have organic medical evacuation resources) in the sector providing CS to their unit. The medical platoon leader is a physician and also serves as the battalion surgeon. He is assisted by the medical operations officer (field medical assistant) in the operational, administrative, and logistical support aspects of the platoon. The ambulance section of the medical platoon is organized into ambulance squads and is supervised by the platoon sergeant. Each squad contains a noncommissioned officer (NCO) squad leader, three medical specialists/ambulance drivers, and two ambulances (Figure 2-1).

b. The number of ambulance squads in a section varies and is based on the type of parent organization. The infantry, airborne, and air assault battalions' ambulance sections have two ambulance squads equipped with high mobility multipurpose wheeled vehicle (HMMWV) ambulances. The mechanized infantry and armor combat maneuver battalions' ambulance sections have four ambulance squads equipped with M-113 truck ambulances.

c. Each ambulance team consists of one vehicle and two medics (aide/evacuation NCO and medical aidman). Specific duties of the ambulance team are to—

- Operate the vehicle and maintain contact with supported elements.
- Find and collect the wounded.
- Perform triage when necessary.
- Administer EMT as required.
- Initiate or complete the Department of Defense (DD) Form 1380, US Field Medical Card (FMC) (Appendix C).

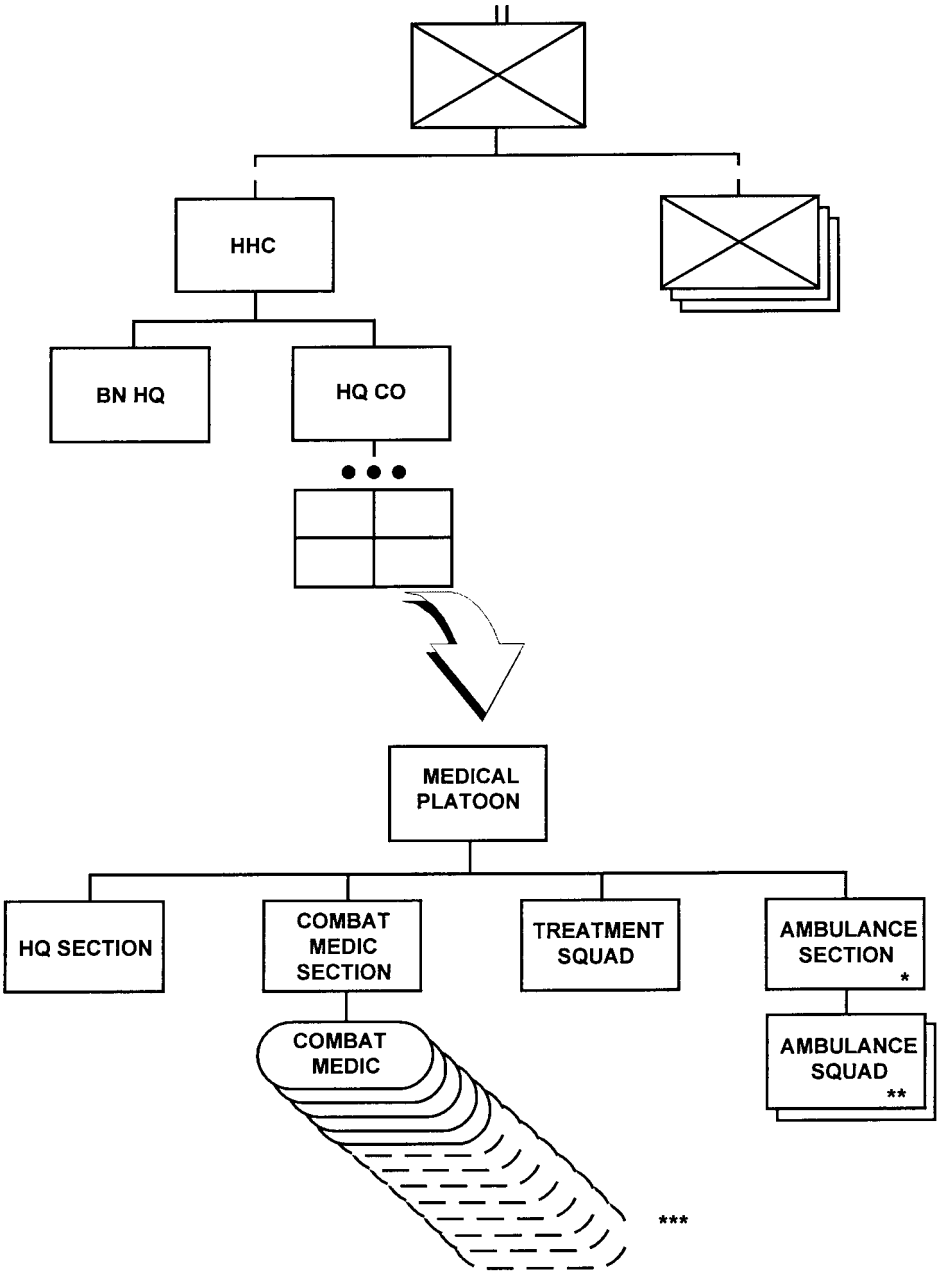

NOTE:

* MECHANIZED INFANTRY AND ARMOR UNITS HAVE 4 AMBULANCE SQUADS.

** TWO AMBULANCE TEAMS.

*** AIRBORNE AND AIR ASSAULT UNITS HAVE 12, LIGHT INFANTRY UNITS HAVE 9, ARMOR UNITS HAVE 5, AND MECHANIZED INFANTRY UNITS HAVE 13.

Figure 2-1. Medical platoon.

- Evacuate litter patients to the BAS.
- Direct or guide ambulatory patients to the BAS.
- Resupply combat medics with Class VIII supplies.
- Serve as messengers within CHS channels.

NOTE

In track ambulances, three medics are required to provide en route medical care.

d. The ambulance squad consists of two ambulance teams.

(1) The aide/evacuation NCO—

- Collects casualties.
- Performs triage and EMT procedures in the care and management of trauma patients.
- Assists in the care and management of combat stress patients.
- Prepares patients for movement.
- Provides en route patient care or acts as vehicle commander and navigator.
- Maintains contact with supported units.
- Performs NBC detection procedures.
- Assists the platoon leader and platoon sergeant in selecting medical evacuation routes.
- Regulates the backhaul of medical supplies for his squad.

(2) The medical specialist/ambulance driver is trained in EMT procedures. He operates and maintains the ambulance and all of its on-board equipment. He also assists the aide/evacuation NCO in the care and handling of patients.

e. The ambulance team is essentially a mobile combat medic team. Its principal function is to collect and treat the sick, injured, and wounded on the battlefield and to rapidly evacuate them. The

patients may be evacuated to the nearest patient collecting point (PCP), ambulance exchange point (AXP), or to the BAS. For communications, the ambulance team employs vehicular-mounted tactical radios on its assigned ambulance. The ambulances are equipped with navigational aids (NAVAIDS) and, when available, the Global Positioning System (GPS). The GPS has the capability of instantly providing ambulance crews with their location by eight-digit grid coordinates. It also provides correct route selection for traveling to a designated point. The team normally operates in the same net as the BASs.

2-3. Echelon II Medical Evacuation in the Division

a. The ambulance platoons of the medical companies organic to the division (Figure 2-2 [Page 2-6] and Figure 2-3 [Page 2-7]) provide—

- Unit-level evacuation support on an area support basis for all units without organic evacuation assets operating within the division AO.

- Division-level medical evacuation support for the entire division.

b. The mission of the ambulance platoon is to—

- Provide ground evacuation and en route medical care for patients from the BAS, from the supported units in the brigade support area (BSA) and division rear, and, when necessary, from the forward support medical company (FSMC) in the BSA to the MSMC in the division rear.

- Reinforce and reconstitute ambulance support forward.

- Provide medical resupply through the backhaul method using returning ground ambulances.

c. The ambulance platoon consists of a platoon headquarters module and multiple ambulance squad modules.

(1) *Platoon leader*. This officer directs, coordinates, and supervises the platoon and plans for its employment. Further, he—

- Establishes and maintains contact with supported treatment squads.

- Makes route reconnaissances.

- Develops and issues strip maps.

- Allocates mission requirements based on priority.

- Designates PCPs and AXPs and develops medical-specific situational overlays.

(2) *Platoon sergeant*. This NCO assists the platoon leader in planning the employment of platoon assets. He provides direct supervision and training of enlisted personnel to include operator maintenance. He assists the platoon leader in conducting route reconnaissance and developing strip maps.

(3) *Aide/evacuation noncommissioned officers*. These NCOs supervise ambulance squads and serve as ambulance team leaders. They perform triage, provide EMT, and assist in evacuating patients.

(4) *Aide/ambulance drivers*. They provide EMT necessary to prepare patients for movement and operate ambulances. They also perform preventive maintenance on their assigned ambulances and associated equipment.

d. The ambulance platoon headquarters normally collocates with the treatment platoon headquarters for mutual support and area support taskings. The ambulance platoon may be totally deployed at one time. The platoon of the MSMC normally places one ambulance team in support of each FSMC and in support of units in the division rear. The remaining teams are used for task force (TF) operations, augmentation, or establishment of an AXP or ambulance shuttle. The FSMC ambulance platoon establishes contact and may locate one or more ambulance teams with the medical platoon of each maneuver battalion.

e. For communications, the ambulance platoon employs vehicular-mounted tactical radios in the platoon headquarters vehicle and each ground ambulance. The platoon operates on the medical evacuation frequency and monitors the company's operations net.

2-4. Echelons I and II Medical Evacuation in the Corps

a. Units located in the corps with organic medical evacuation assets use these assets for Echelon I medical evacuation support.

b. The ASMC (Figure 2-4 [page 2-8]) provide Echelons I and II medical evacuation support to those units (without organic resources) located in the corps. The ASMC is structured like the division medical companies with its ambulance platoon providing evacuation support on an area basis to all corps units in the corps rear.

c. The mission of the ambulance platoon is to—

- Provide ground evacuation and en route medical care for patients from the site of injury to an ASMC.
- Provide medical resupply through the backhaul method using returning ambulances.
- Act as a carrier of medical records and resupply requests.
- Provide transportation of medical personnel and equipment.

d. The organization and staffing of the ASMC ambulance platoon is similar to the ambulance platoon in the division-level medical companies. The platoon has four ambulance squads equipped with HMMWV ambulances. The ambulance platoon collocates with the clearing station. The ambulance teams are collocated with MTFs and hospitals, as required.

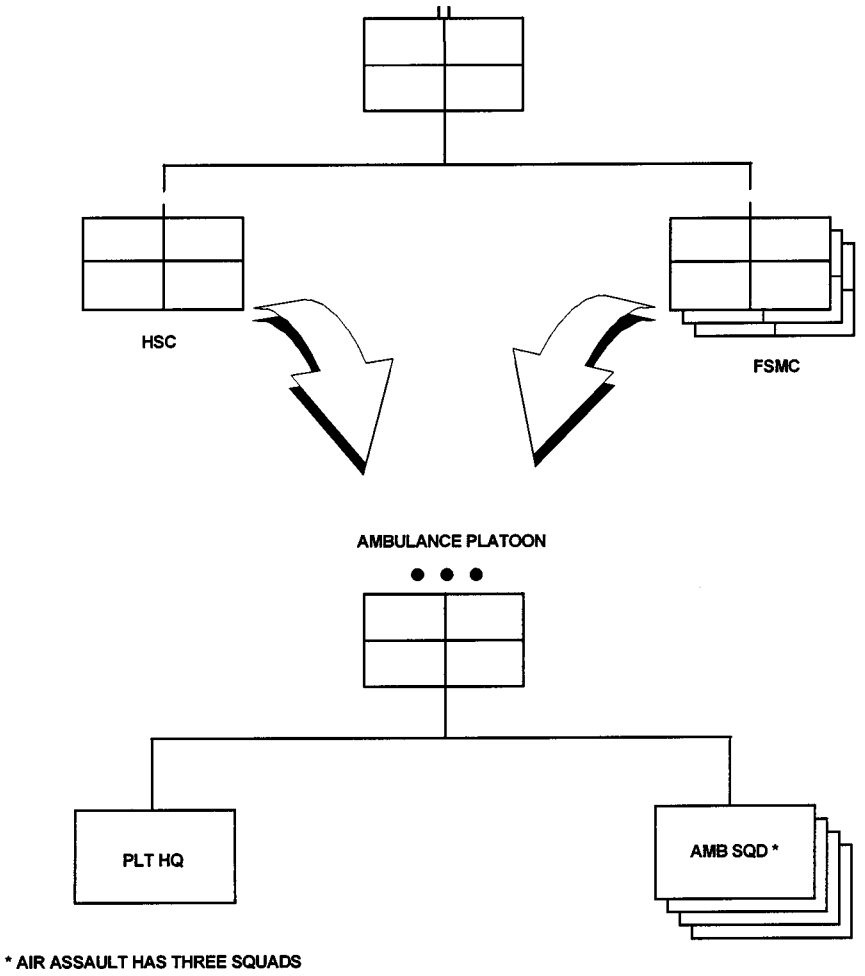

Figure 2-2. Ambulance platoon (airborne, air assault, and light infantry divisions).

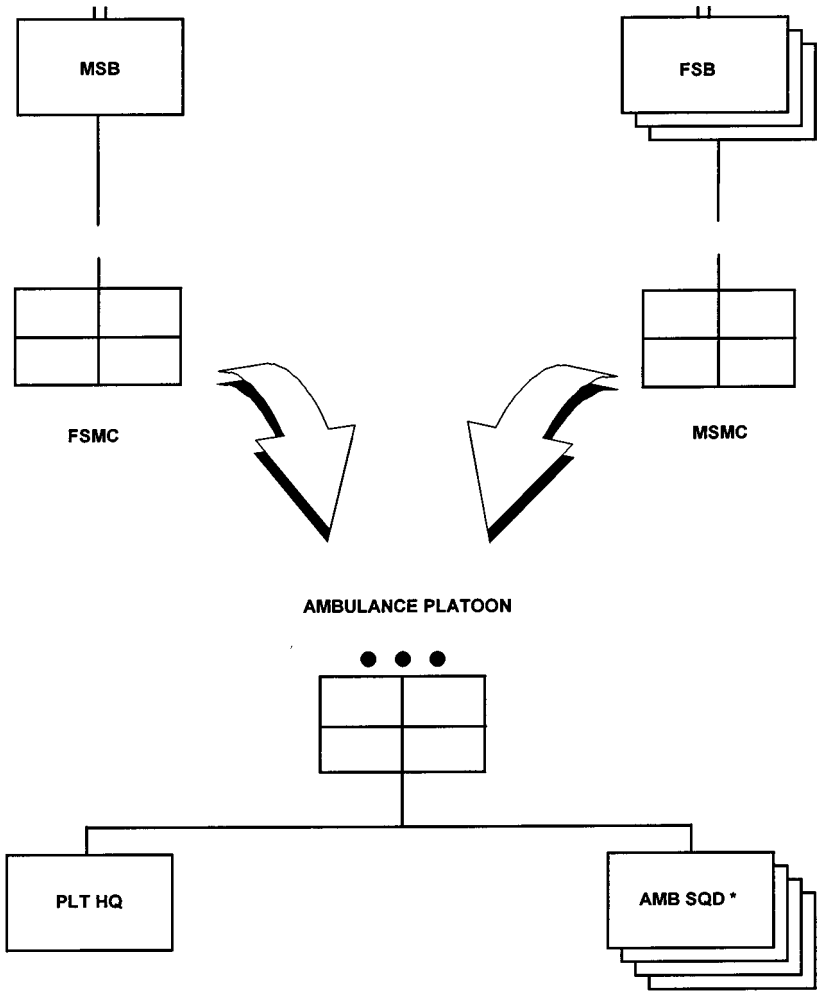

* MAIN SUPPORT BATTALION (MSB) HAS FIVE AMBULANCE SQUADS WITH WHEELED VEHICLES. FORWARD SUPPORT BATTALION (FSB) HAS FIVE AMBULANCE SQUADS WITH TWO SQUADS OF WHEELED VEHICLES AND THREE SQUADS OF TRACK VEHICLES.

Figure 2-3. Ambulance platoon (mechanized infantry and armor divisions).

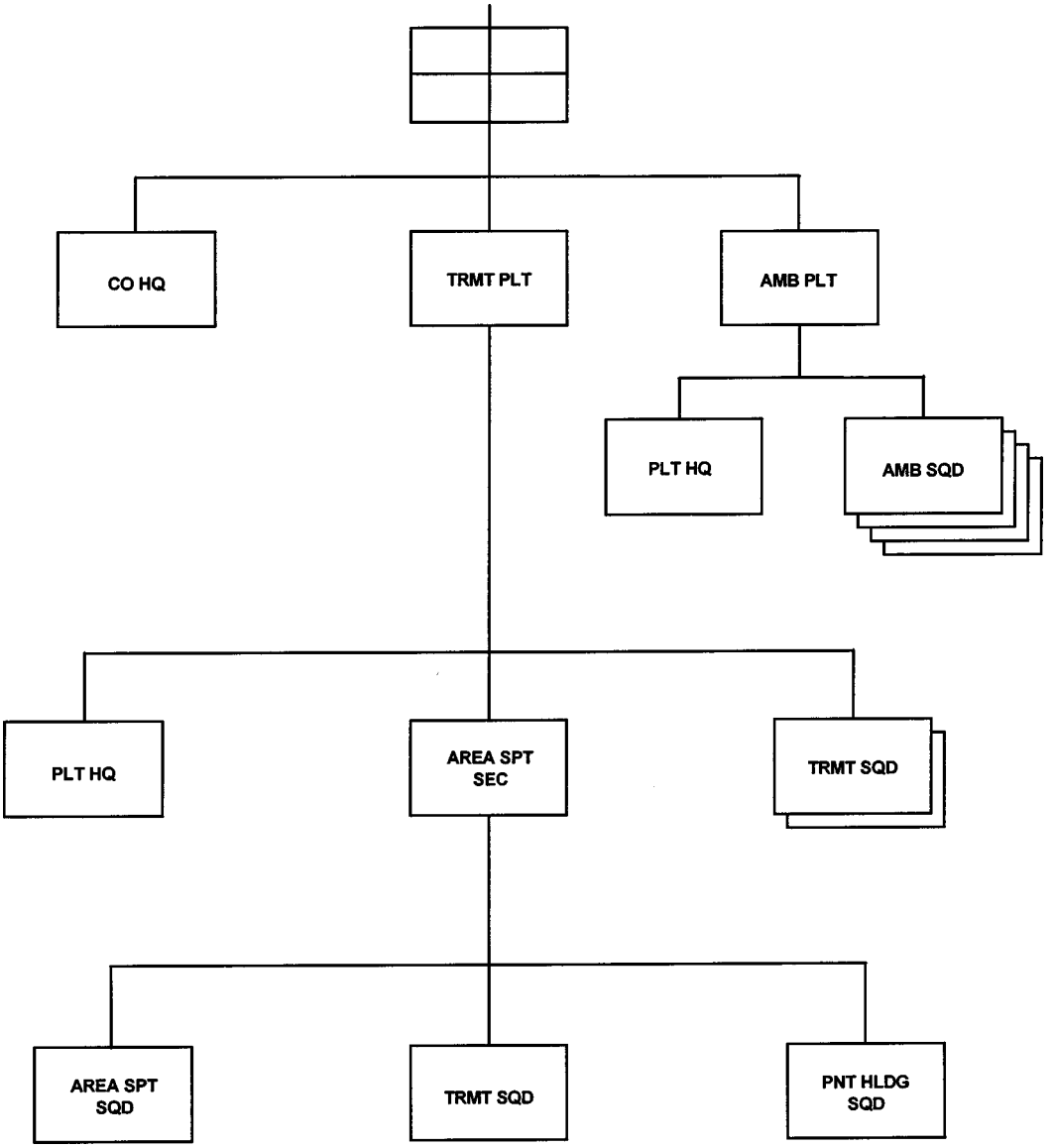

Figure 2-4. Area support medical company.

CHAPTER 3

CORPS AND ECHELONS ABOVE CORPS MEDICAL EVACUATION UNITS

This chapter discusses Medical Force 2000 (MF2K) units. Organizations designed and/or changed under the Medical Reengineering Initiative (MRI) are discussed in Appendix D.

Section I. MEDICAL EVACUATION BATTALION

3-1. General

The headquarters and headquarters detachment (HHD), medical evacuation battalion, serves as the central manager of ground and air evacuation assets within the corps and EAC.

3-2. Assignment

a. The medical evacuation battalion is assigned to the medical command (MEDCOM) in the EAC or to the medical brigade in the corps. It is normally further assigned to a medical group for C2.

NOTE

Under the MRI design, the medical group is replaced by the medical brigade.

b. Air and ground ambulance companies assigned to the MEDCOM or medical brigade are attached to the medical evacuation battalion for C2.

c. The basis of allocation is one medical evacuation battalion per a combination of three to seven of the following units:

- Medical companies, air ambulance.
- Medical companies, ground ambulance.

3-3. Mission and Capabilities

a. The mission of the medical evacuation battalion is to provide C2 of air and ground medical evacuation units within the TO. It tactically locates in the area where it can best control subordinate air and ground ambulance companies.

b. The medical evacuation battalion is designed to focus on C2, planning, patient evacuation, subordinate unit support, and vehicle management. Specific capabilities are—

- Command and control, planning and supervision of operations and training, and administration of a combination of air and ground ambulance companies.
- Staff and technical supervision of aviation operations, safety, standardization, and aviation unit maintenance (AVUM)-level maintenance within the attached air ambulance companies.
- Coordination of medical evacuation operations and communications functions.
- Coordination of logistics and service support to attached units.
- Aviation medicine and unit-level CHS.

c. This unit is dependent upon appropriate elements of the corps or Army Service Component Command (ASCC) for—

- Personnel service support (PSS).
- Combat health support, to include hospitalization.
- Mortuary affairs (MA) support.
- Laundry, shower, and clothing repair.
- Communications security (COMSEC) equipment maintenance.
- Military police support.

3-4. Organization and Functions

a. *Medical Evacuation Battalion* (*Figure 3-1, Page 3-4*). The HHD, medical evacuation battalion, is organized into a—

- Battalion headquarters section.
- S1 (Adjutant [US Army]) section.
- S2/S3 (Intelligence Officer [US Army] and Operations and Training Officer [US Army]) section.
- S4 (Supply Officer [US Army]) section.

- Detachment headquarters.
- Treatment team.

b. Battalion Headquarters Section. This section provides C2 of the assigned and attached air and ground ambulance companies. It also assists the commander on all military intelligence matters (to include the medical threat), organization, training, operations, planning, PSS, and logistics support. Further, it provides information on the health of the command and aviation medicine expertise, as well as providing supervision over technical and flight aspects of administration, training, and safety within subordinate aviation units.

c. S1 Section. This section, under the direction of the S1, is responsible for the operational and technical supervision of personnel and administrative duties to include—

- Strength accounting, casualty reporting, and replacement operations.
- Personnel actions.
- Forms management.
- Other personnel and administrative service functions.
- Legal support (preparation of required documents for nonjudicial, judicial, and administrative procedures).

d. S2/S3 Section. This section assists the S2/S3 officer in the execution of his duties and is capable of sustained 24-hour operations. This section remains abreast of the tactical situation and determines future medical evacuation requirements. It plans for ground and air evacuation operations, coordinates command post (CP) operations, and maintains the status of the air ambulance units and plans for their employment. Further, this section maintains communications systems and nets, determines intelligence requirements, coordinates with movement control elements, and prepares orders and overlays.

e. S4 Section. The S4 section assists the S4 officer in the execution of his duties. This section plans, coordinates, and supervises the requisitioning, receipt, storage, issue, and accounting for all classes of supply. Further, it monitors and keeps the commander informed on all matters pertaining to maintenance on assigned aircraft, ground vehicles, and medical equipment. This section also serves as the interface with the supporting medical battalion, logistics (forward/rear) for medical nonexpendable and durable item supply transactions.

f. Detachment Headquarters Section. The detachment headquarters section provides, C2, administration, and logistics support for assigned personnel. It is also responsible for company supply and armament functions, food service operations, maintenance operations, and unit administration.

g. Treatment Team. The treatment team provides unit-level CHS to assigned and attached elements collocated with the detachment headquarters and to adjacent units on an area support basis.

The physician is a flight surgeon and provides staff assistance to the battalion commander on all matters pertaining to aviation medicine. The flight surgeon provides care and treatment for all assigned and attached aircrew members. This physician is dual-hatted as the battalion surgeon.

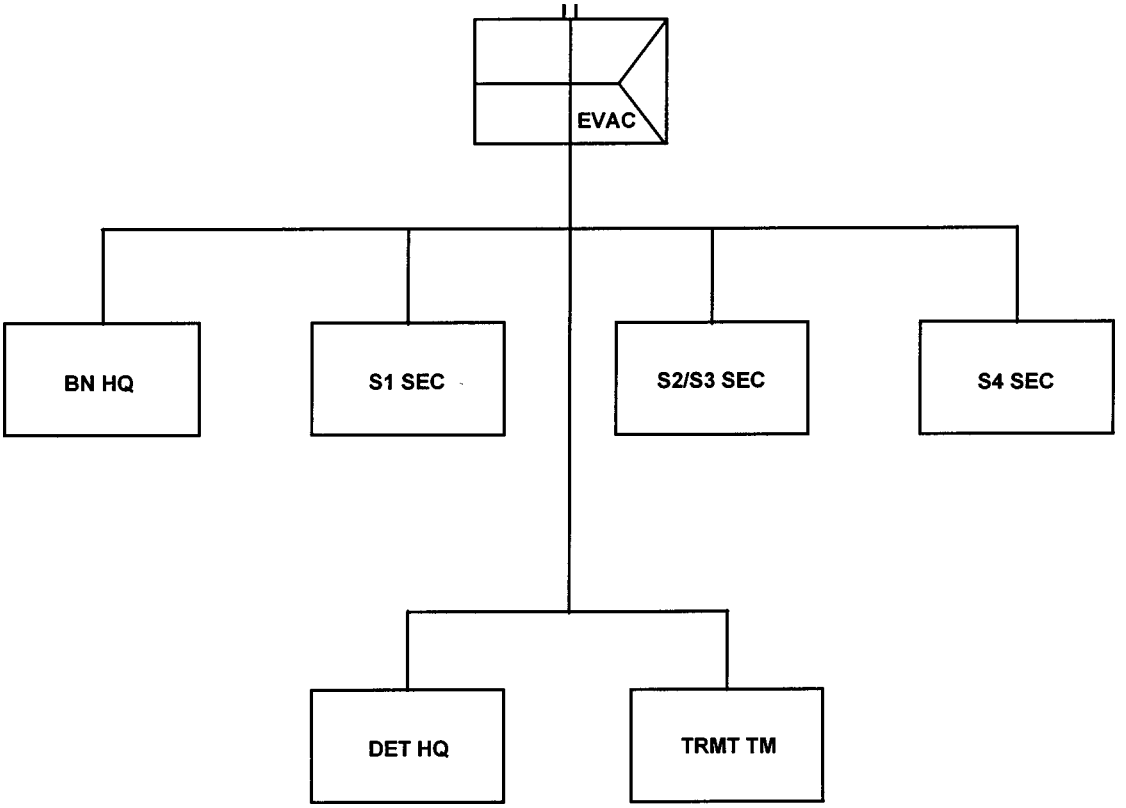

Figure 3-1. Medical evacuation battalion.

Section II. MEDICAL COMPANY, GROUND AMBULANCE

3-5. General

The CHS system to sustain the US Army in war is a continuum of increasing echelons of care extending from the forward line of own troops (FLOT) through the CONUS base. Patients must be moved through the system quickly to maintain their physiology and prevent needless loss of life or function. Ground ambulances serve as one of the primary means of evacuating patients from the battlefield.

3-6. Assignment

a. The medical company, ground ambulance, is normally assigned or attached to a medical evacuation battalion, HHD, for C2.

b. The basis of allocation within the CZ is one per division supported, and within the EAC, one per two divisions within the theater.

3-7. Mission, Capabilities, and Limitations

a. The mission of the medical company, ground ambulance, is to provide ground evacuation within the TO. The medical company, ground ambulance, is employed in both the corps and EAC. It is tactically located where it can best control its assets and execute its patient evacuation mission.

b. The unit is capable of providing—

- A single-lift capability for evacuation of 160 litter patients, or 320 ambulatory patients.
- Medical evacuation from division medical companies to CZ hospitals.
- Medical evacuation from the ASMC to supporting hospitals.
- Augmentation of division medical company evacuation assets.
- Augmentation of covering force and deep operations medical evacuation assets.
- Movement of patients between hospitals or aeromedical staging facilities/aeromedical staging squadrons (ASFs/ASTS), mobile aeromedical staging facilities (MASFs), railheads, seaports, and hospitals in both the corps and EAC.
- Area evacuation support beyond the capabilities of the ASMB.
- Emergency movement of medical personnel and supplies.

c. Effective operation of this unit is dependent upon viable communications systems for C2 and adequate road networks.

NOTE

Employment in severe arctic or primitive jungle conditions seriously impairs the capabilities of the ground ambulance company.

d. This unit is dependent upon the appropriate elements of the corps, EAC, or ASCC for—

- Religious, financial, legal, personnel, and administrative services.
- Laundry, shower, and clothing repair.
- Generator equipment maintenance.
- Combat health support to include hospitalization.

3-8. Organization and Functions

a. *Medical Company, Ground Ambulance*. The medical company, ground ambulance, is organized into a company headquarters section and four ambulance platoons. Each ambulance platoon consists of a platoon headquarters and five ambulance squads of two ambulances each (Figure 3-2).

b. *Company Headquarters*. This element provides C2, communications, administration, food service, and logistical support (to include maintenance) for the subordinate ambulance platoons. It also advises the commander on NBC defensive measures and maintains communications capabilities and equipment.

c. *Ambulance Platoon Headquarters*. Each of the four ambulance platoon headquarters provides C2 for five subordinate ambulance squads (10 ambulances).

d. *Ambulance Squad*. Each ambulance squad consists of two ambulances with a two-man crew. The members of the squad operate the ambulances and provide en route medical care for patients entrusted to their care. Further, they maintain the level of expendable Class VIII supplies in the ambulance medical equipment set (MES) by reconstituting supplies from medical companies or hospitals when they pick up or drop off patients. They are also responsible for performing operator maintenance on assigned vehicles. When employed in the CZ—

- Two ambulance platoons are stationed forward in the division to provide medical evacuation support from the division to the corps and to act as augmentation.

- Two ambulance platoons may be employed in the corps to provide medical evacuation support for interhospital and hospital to MASF (or other embarkation points) transfers.

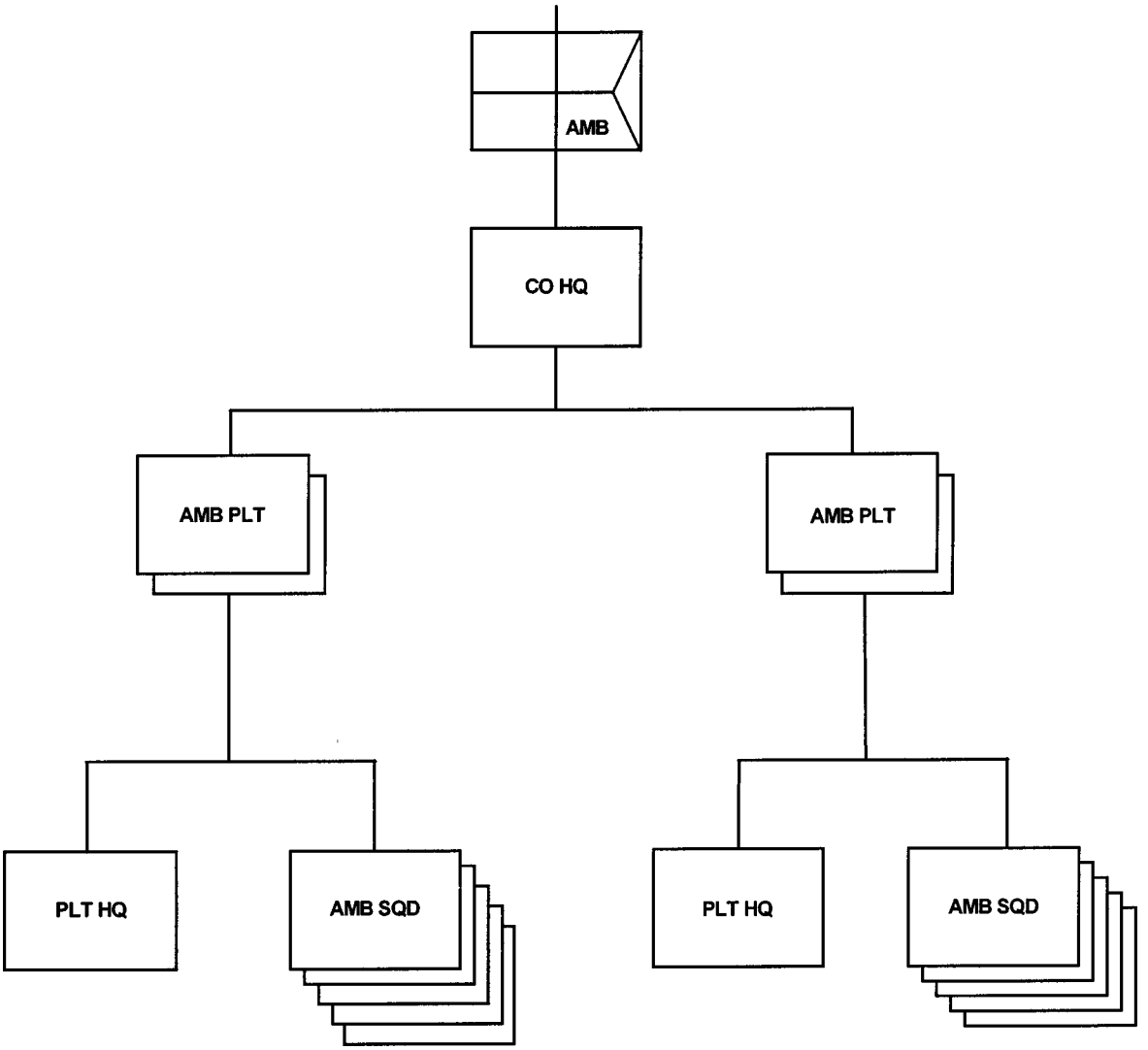

Figure 3-2. Medical company, ground ambulance.

Section III. MEDICAL COMPANY, AIR AMBULANCE

3-9. General

The medical company, air ambulance, provides aeromedical evacuation for all categories of patients consistent with evacuation precedences and other operational considerations. Medical evacuation is effected from as far forward as possible in the tactical AO to division- and corps-level MTFs.

3-10. Assignment

a. The medical company, air ambulance, is normally assigned to the MEDCOM or medical brigade and attached to the medical evacuation battalion for C2.

b. The basis of allocation is one unit in support of each division or equivalent force supported. Further, one unit is in general support (GS) in the corps per two division or fraction thereof; or .333 units per separate brigades or armored cavalry regiments (ACRs).

3-11. Mission and Capabilities

a. The mission of the medical company, air ambulance, is to provide—

- Aeromedical evacuation support within the TO, either DS to the divisions or GS to the corps.

- Emergency movement of medical personnel, equipment, and supplies including whole blood, blood products, and biologicals.

b. Specific capabilities of this unit are to—

- Operate on a 24-hour-a-day basis.

- Evacuate patients based on operational capability (dependent on type of aircraft).

- *Operate fifteen air ambulances* (*UH-60A)*. These ambulances are each capable of carrying six litter patients and one ambulatory patient, or seven ambulatory patients, or some combination thereof. Single patient lift capability is 90 litter patients, or 105 ambulatory patients, or some combination thereof. In-flight medical treatment and surveillance of patients is provided by a flight medic. OR

- *Operate fifteen air ambulances* (*UH-1H/V)*. These ambulances are capable of carrying six litter, or nine ambulatory patients, or some combination thereof. Single patient lift capability is 90 litter, 135 ambulatory, or some combination thereof. In-flight medical treatment and patient surveillance are provided by a flight medic.

- Provide internal/external load capability for the movement of medical personnel and equipment.

- Perform AVUM on all organic aircraft and organizational maintenance on all organic avionics equipment. It also performs unit-level maintenance on all organic equipment less medical.

- Provide air crash rescue support, less fire suppression.

- Provide rescue of downed aircrews. (Refer to paragraph 1-13 for additional information.)

- Operate as an area support medical evacuation (MEDEVAC) section and three forward support MEDEVAC teams (FSMTs) to provide flexibility in supporting division, brigade, or brigade TF equivalent operations.

c. This unit is dependent upon—

(1) Support elements of corps or ASCC for—

- Finance, legal, and religious support.
- Personnel services.
- Logistics.
- Combat health support, to include medical supply and equipment.
- Food service support.
- Communications security equipment maintenance.
- Mortuary affairs support.
- Military police support.
- Laundry, shower, and clothing repair.
- Engineer support for heliport/landing strip construction and maintenance.

(2) The supporting aviation intermediate maintenance (AVIM) organization for AVIM support.

3-12. Organization and Functions

a. The medical company, air ambulance (Figure 3-3), is organized into a/an—

- Company headquarters.

- Flight operations platoon consisting of a platoon headquarters, a flight operations section, and an airfield service section.

- Aircraft maintenance platoon consisting of a platoon headquarters, a component repair section, and a maintenance section.

- Air ambulance platoon consisting of a platoon headquarters, an area support MEDEVAC section, and three FSMTs.

b. For additional information on the organization and functions of the medical company, air ambulance, refer to FM 8-10-26.

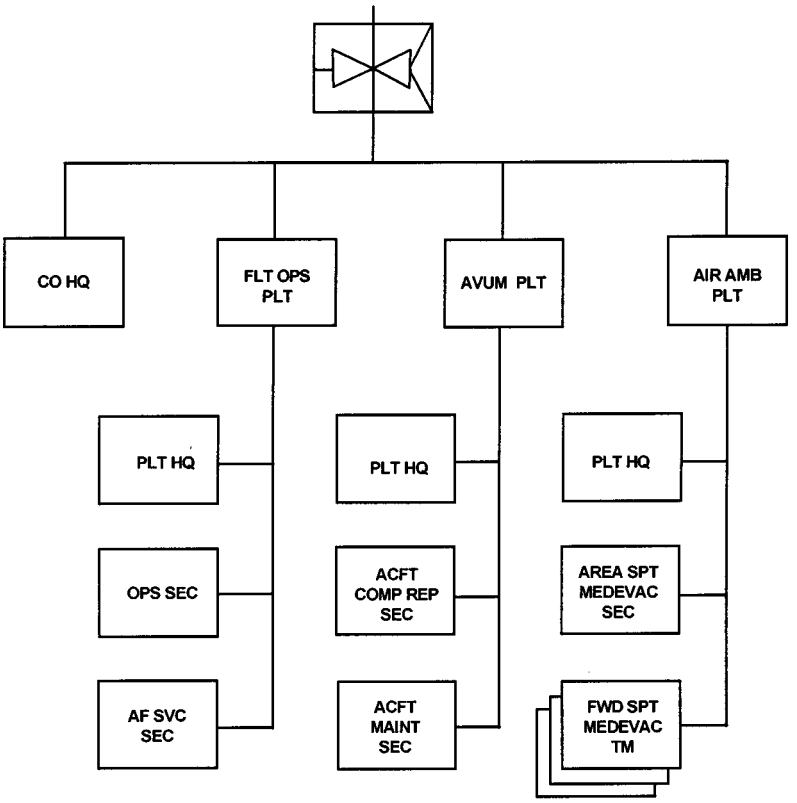

Figure 3-3. Medical company, air ambulance.

CHAPTER 4

THE MEDICAL EVACUATION SYSTEM

4-1. General

a. The current medical evacuation doctrine and organizations are the result of an evolutionary process. This process includes both trial and error and the assimilation of lessons learned on the battlefield and in training environments.

b. Medical evacuation encompasses—

- Collecting the wounded.
- Sorting (triage) and prioritizing.
- Providing an evacuation mode (transportation).
- Providing medical care en route.
- Anticipating complications and being ready to perform emergency medical intervention.

c. The increase in the speed and lethality of combat formations has served to increase the importance of medical evacuation as the key link in the continuum of care. The air and ground evacuation assets currently used to perform battlefield evacuation have both strengths and limitations. To be effective they must be employed in a synchronized system, each complementing the capabilities of the other.

This paragraph implements STANAG 3204 and AIR STD 44/36A.

d. The initial decision of treatment echelon required is made by the treatment element (squad, team, or treatment platoon). Soldiers are evacuated by the most expeditious means of evacuation dependent on their medical condition and assigned evacuation precedence. (Refer to Chapter 7 for an in-depth discussion of the evacuation precedences.)

- Priority I, URGENT.
- Priority IA, URGENT-SURG.
- Priority II, PRIORITY.
- Priority III, ROUTINE.
- Priority IV, CONVENIENCE.

NOTE

The NATO STANAG 3204 has deleted the category of Priority IV, CONVENIENCE; however, it will still be included in the US Army evacuation priorities as there is a requirement for it on the battlefield.

(1) The medical evacuation battalion maximizes the effectiveness of corps ground and air ambulance resources. This unit exercises C2 over assigned and attached ground or air ambulance companies. It also provides the required evacuation out of division areas, between hospitals in the corps and EAC, and from ASMBs in the corps and EAC. The medical evacuation battalion provides the flexibility and capability for task organizing to support close, deep, and rear operations. It can be modified to support all aspects of the operational continuum. The ASMB ambulance platoon and the ambulance squad in the division medical company provide evacuation within their assigned AO. To ensure that patients are evacuated to the appropriate treatment elements, medical regulating officers (MROs) are organic to the medical group and medical brigade.

(2) The patient's medical condition is the overriding factor in determining the evacuation platform and destination facility. The air ambulance operates wherever needed on the battlefield, dependent on risk and METT-TC factors. The crew of the air ambulance, assisted by on-board patient monitoring and diagnostic equipment, is trained in aeromedical procedures to provide optimum en route patient care. It is the platform of choice for most categories of patients. However, insufficient numbers of air ambulances are available to evacuate all patients expected in a corps. To conserve these valuable resources, CHS planners should plan to use air ambulances to primarily move Priority I, URGENT and Priority IA, URGENT-SURG patients with other categories on a space available basis.

e. On the integrated battlefield, commanders must employ their available evacuation resources to accomplish the mission while maximizing survivability. The enemy's ability to fire on exposed elements may be inhibited by the clever use of cover, concealment, and available defilade. It is essential to minimize our vulnerabilities while exploiting those of the enemy. It is also important to be as well trained and knowledgeable of US, allied, coalition, and threat forces capabilities and operational doctrine as possible. (Refer to paragraph 5-6 for additional information.)

f. In stability operations and support operations, the force composition and availability of evacuation resources will be determined by the mission, the anticipated duration of the operation, and the potential for violence. (Refer to paragraphs 4-8 and 4-9 for additional information on these types of operations.)

4-2. Medical Evacuation

An efficient medical evacuation system—

- Minimizes mortality by rapidly and efficiently moving the sick, injured, and wounded to an MTF.

- Clears the battlefield enabling the tactical commander to continue his mission.

- Builds the morale of the soldiers by demonstrating that care is quickly available if they are wounded.

- Provides en route medical care that is essential for improving the prognosis and reducing disability of wounded, injured, or ill soldiers.

a. Evacuation is performed by the higher echelon of medical care going forward and evacuating from the lower echelon.

b. Evacuation assets must have equal or greater mobility as the troops supported.

c. The CHS commander responsible for the medical evacuation mission is the primary manager of the medical evacuation assets. A single, dedicated medical command authority must manage all evacuation assets. The medical manager ensures that the optimum evacuation mode is used based upon the patient's medical condition and the—

- Availability of resources.

- Destination MTF.

- Tactical situation.

d. The evacuation of patients in nonmedical ground and air assets must be considered in mass casualty situations. Nonmedical assets will be augmented, whenever possible, with medical personnel to provide en route medical care. With prior coordination, augmentation medical personnel may be obtained from within the division medical company or the ASMB. When augmentation of medical personnel is not possible, the transportation of casualties can still be accomplished using nonmedical vehicles and aircraft; when possible, combat lifesavers should accompany the casualties. The planning for this requirement is the responsibility of the division medical operations center (DMOC) or battalion S3. (Refer to paragraph 1-4 for a discussion of CASEVAC.)

e. Routinely bypassing echelons of care is detrimental to the wounded soldier and the CHS system. Bypassing echelons of care—

- Negates the effectiveness of medical resources.

- Risks further injury to the patient.

- Removes soldiers unnecessarily from forward locations on the battlefield.

- Causes overevacuation of less critically injured soldiers; thereby, resulting in a delay of potential RTD soldiers.

- Unnecessarily removes the evacuation asset from its supporting position for longer periods of time.

4-3. Basic Considerations in Medical Evacuation Operations

a. General. As METT-TC factors affect the employment of all units, the medical evacuation commander must consider the basic tenets that influence the employment of medical evacuation assets. These factors include the patient's medical condition and the—

- Tactical commander's plan for employment of combat forces.
- Enemy's most likely course of action.
- Anticipated patient load.
- Expected areas of patient density.
- Availability of medical evacuation resources.
- Availability, location, and type of supporting MTFs.
- Protection afforded medical personnel, patients, and medical units, vehicles, and aircraft under the provisions of the Geneva Conventions.
- Army airspace command and control (A2C2) plan.
- Engineer obstacle plans.
- Fire support plan (to ensure medical evacuation assets are not dispatched onto routes and at the times affected by the fire support mission.)
- Road network/dedicated medical evacuation routes (contaminated and clean).
- Weather conditions.

b. Patient Acquisition.

(1) Units with organic medical evacuation assets have the primary responsibility for patient acquisition. Methods of employment and evacuation techniques differ depending upon the nature of the operation.

(2) Units without organic ambulance assets are provided medical evacuation support on an area basis. Units must develop techniques which facilitate the effective employment of their combat medics, enhance the ability to acquire patients in forward areas, and rapidly request medical evacuation

support. The techniques developed should be included in the unit tactical standing operating procedure (TSOP). As a minimum, the TSOP should include the—

- Vehicle assignment for the combat medic.
- Vehicles designated to be used for casualty transport and/or patient evacuation.
- Procedures for requesting medical evacuation support (during routine operations or during mass casualty situations).
- Role of the first sergeant, platoon sergeants, and combat lifesavers in medical evacuation.

c. Medical Platoon, Treatment Squad Forward.

(1) The medical platoon leader (a physician) should be included in all battalion tactical planning. He must keep himself knowledgeable of the concept of operations, commander's intent, and the anticipated CHS requirements. He develops his CHS plan (FM 8-55 and FM 8-42) and provides CHS overlays with preplanned evacuation routes, PCPs, and AXPs to the ambulance squads or teams (Figure 4-1) for inclusion in the battalion OPLAN. He ensures that his squad leaders provide strip maps or other navigational tools to the ambulance drivers, if needed. He requests augmentation support from the supporting medical company in advance of the operation, if required. When elements of a maneuver battalion are attached to a TF, the medical platoon leader ensures that adequate medical elements are included in the support package. He further ensures that orientation and support are provided for his medical personnel. This precludes taxing the medical elements of the receiving unit. These responsibilities are normally delegated to the medical operations officer (field medical assistant).

(2) The ambulance section NCO ensures that his squad leaders have a working knowledge of the terrain features in the AO. Whenever possible, he familiarizes himself with primary and secondary medical evacuation routes through route reconnaissance conducted by his squad leaders. This NCO manages the employment of the ambulance teams and monitors the communications net to remain abreast of the tactical situation.

(3) The following factors should be considered when selecting ambulance routes:

- Tactical mission.
- Coordinating evacuation plans and operations with the unit movement officer.
- Security of routes.
- Availability of routes.
- Physical characteristics of roads and cross-country routes (to include natural obstacles).

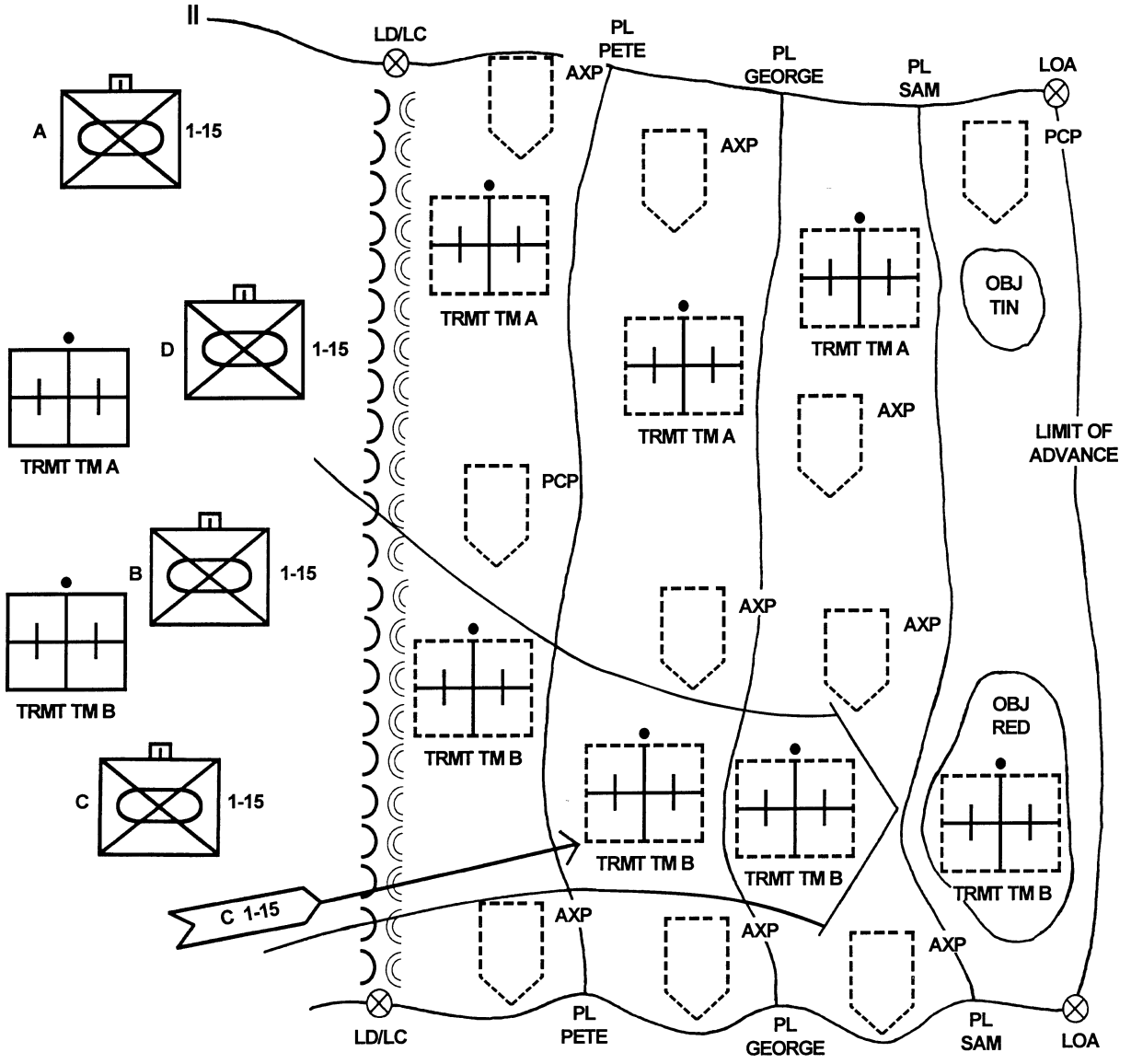

Figure 4-1. Typical evacuation overlay.

- Requirements to traverse roads in built-up areas and potential obstructions from rubble and debris.
- Traffic density.
- Time and distance factors.
- Proximity of possible routes to areas that may be subject to enemy fire.
- Lines of patient drift.
- Cover, concealment, and available defilade for moving and stationary vehicles.
- Engineer obstacle plans.
- Fire support plan (to ensure medical evacuation assets are not dispatched onto routes and at the times affected by the fire support mission).

(4) Depending upon the combat situation, the modes of evacuation may include walking soldiers who are wounded, manual and litter carries, nonmedical transportation assets, or dedicated medical evacuation platforms. Evacuation in the battalion area normally depends on the organic ambulances assigned. Evacuation by air ambulance is dependent upon the patient's medical condition, availability of air assets, tactical situation, and weather conditions.

(*a*) The ambulance team or squad routinely deploys with the company trains (combat trains). It operates, however, as far forward as the tactical situation permits. This team, when operating in a maneuver company AO, is normally under the tactical control of the maneuver company executive officer or first sergeant. The team, however, remains under the technical and operational control (OPCON) of the medical platoon.

(*b*) The medical operations officer ensures that the ambulances are located close to the anticipated patient workload. An ambulance team consists of one ambulance and two medical specialists (on track vehicles, a third medic is required to permit en route medical care). One or two of these teams serve in DS of a maneuver company. To become familiar with the specific terrain and battlefield situation, the team maintains contact with the company during most combat operations. The remaining ambulance assets are positioned strategically throughout the battalion area or are sited at the BAS to—

- Evacuate patients from the company aid posts, PCPs, or AXPs to the BAS.
- Reinforce the forward teams.
- Support the combat forces held in reserve and/or scout and mortar platoons.

(*c*) Another employment option is to forward site the additional ambulance teams at company aid posts or PCPs, as well as at the BASs.

(*d*) Many times the ambulance team finds battlefield casualties who have not been seen by a combat medic. In these cases, the team members dismount and then find, treat, and evacuate the patients.

(*e*) Ambulance teams not specifically dedicated to support combat elements can be used as messengers in medical channels and to provide transport of emergency medical personnel, equipment, and supplies.

(5) During static situations where the maneuver company is not in enemy contact or is in reserve, the ambulance team returns to the BAS to serve as reinforcement to other elements in contact. However, during movement to contact, the ambulance team immediately deploys with its supported unit. In moving patients back to the PCPs point, the team may be assisted by nonmedical personnel. Specific duties of the ambulance team are to—

- Maintain contact with supported elements.
- Find and collect the wounded.
- Administer EMT.
- Initiate or complete the FMC (Appendix C).
- Evacuate patients to the BAS.
- Direct or guide ambulatory patients to the BAS.
- Resupply combat medics.
- Serve as messengers in medical channels.

(6) During the offense, PCPs may be used to avoid hampering the movement of the maneuver elements. In fast-moving situations, preplanned PCPs are included in the CHS plan and activated based on the crossing of phase lines, upon the occurrence of predetermined events, or on the execution of other control measures. It may be necessary to set up multiple PCPs for each phase of an operation. Rotating the use of these points precludes the enemy from using them to pinpoint maneuver elements or from attracting enemy fires. When the situation permits, patient evacuation from PCPs or AXPs may be accomplished by air ambulances.

(7) Ambulance teams move using available terrain features for cover and concealment. They avoid prominent terrain features and likely targets. When stationary, the ambulance crew should conceal the vehicle as much as possible.

(8) When a casualty occurs in a tank or a Bradley infantry fighting vehicle (BIFV), the ambulance team moves as close to the armored vehicle as possible. Assisted by the armored crew, if possible, the casualty is extracted from the vehicle and then administered EMT. The ambulance team

moves the patient to the BAS, or to a PCP point to await further evacuation. The combat medic normally remains with the company combat trains, but may be used anywhere in the company area, even assisting the ambulance teams in some situations. He may be used to direct ambulance teams to locations where vehicle crews need assistance, or where injured or wounded crew members have been left. In some situations, crew members may have to rely on self-aid or buddy aid until the combat lifesaver or the combat medic arrives.

(9) Medical evacuation on an area basis is required at all echelons in the CHS system. Divisional units, without organic evacuation resources such as combat engineers, will require evacuation support on an area basis. To ensure that these elements receive adequate support, the CHS planner must include their requirements into the OPLAN. Prior coordination is essential to ensure that the locations of PCPs, AXPs, and BASs are disseminated to these elements and that any unique support requirements are included.

d. Medical Platoon Treatment Squad or Team to Forward Support Medical Company.

(1) Evacuation from the treatment squad or team is normally provided by the FSMC ambulance platoon and the FSMT of the DS air ambulance company. Further, these ambulance assets provide evacuation support on an area basis to other units in the brigade rear.

(2) The elements of the ambulance platoon are normally collocated with the FSMC treatment platoon for mutual support. They establish contact and locate one ambulance team with the medical platoon of each maneuver battalion. The remaining ambulances are used for brigade TF operations and area support. The ambulances are pre-positioned at AXPs or PCPs, or are field-sited at the FSMC.

(3) An air ambulance team of the corps air ambulance company can be forward deployed to the BSA and collocated with the FSMC depending upon METT-TC. The team may be attached in DS or under the OPCON of the FSMC. (The FSMT may also be attached to the aviation brigade for support less OPCON.) The OPCON relationship provides authority to the FSMC to direct the integrated air and ground evacuation system. Administrative and logistics responsibilities, along with discipline, internal organization, and training, remain the responsibility of the parent unit. The section leader of the FSMT should be included in the brigade tactical planning process. The air ambulance team evacuates Priority I, URGENT patients from as far forward as possible to the FSMC. Further, when a FST is collocated with a division medical company (FSMC or MSMC), air ambulances evacuate Priority IA, URGENT-SURG to this facility. External lift capabilities of aeromedical evacuation helicopters add an important dimension to its role on the battlefield. It provides the FSMC commander flexibility and agility in the movement of treatment teams and equipment to the forward battle area. It also provides the capability to rapidly resupply Class VIII supplies to combat units.

(*a*) Corps air evacuation elements may operate from the division rear and BSAs providing around-the-clock, immediate response, evacuation aircraft. To accomplish this, elements must maintain a close tie with the division A2C2 system.

(*b*) The FSB support operations can provide planning and coordination between air ambulance elements in the BSA and the maneuver brigade S3. Since the support operations section is not

staffed for this mission, the FSMT should plan to provide the FSB support operations cell with a flight operation specialist to assist in A2C2 planning and coordination. Forward support MEDEVAC teams, through the FSB support operations, provide the necessary information to the maneuver brigade S3.

(4) In the FSMC, the executive officer is the principal assistant to the commander for the tactical employment of the company assets. He should be included in all brigade tactical planning. He needs to be prepared to reinforce or reconstitute forward CHS elements and to request augmentation through the DMOC, if required. The FSMT leader keeps the FSMC executive officer appraised of his operational capability. This enables the executive officer to effect timely reinforcement or augmentation. The FSMC executive officer must be familiar with the specific terrain and battlefield situation. Further, he should have a thorough understanding of the division and brigade commanders' ground tactical plan.

e. Forward Support Medical Company to the Medical Company in the Division Rear Area.

(1) In Vietnam, with the virtually unrestricted availability of aeromedical evacuation, it became a common practice to overfly echelons of CHS. Patients were evacuated directly to a corps-level hospital. A return to a more systematic approach to patient evacuation is dictated by the—

- Potentially greater distances involved.
- Necessity of integration into the various levels of A2C2.
- Requirement to treat as far forward as possible.
- Requirement to limit the overevacuation of patients to reduce congestion at corps MTFs.
- Threat.

(2) The FSMC commander is responsible for the brigade medical evacuation plan, to include the use of both ground and air assets. The commander should include the medical company executive officer, brigade S1, brigade executive officer, medical platoon leaders, FSMT leader, and the forward support battalion (FSB) CHS officer in the planning process. Evacuation from the FSMC is normally provided by ground and air assets from the corps medical evacuation battalion. The ambulance platoon of the MSMC does not possess sufficient assets to move the anticipated number of patients from the FSMCs. It usually moves only those patients who will RTD within 72 hours (and are held in the MSMC holding squad) or clear the FSMC prior to the relocation of the unit.

(3) The MSMC ambulance platoon normally collocates with the treatment platoon for mutual support and area taskings. It performs ground evacuation and en route patient care for supported units in the division rear. It may also evacuate patients from the FSMC in the BSA, as necessary. The ambulance platoon is mobile in operations as its assets may be totally deployed at one time. The platoon normally forward stations a portion of its teams in support of those units in the division rear. The remaining teams are used for TF operations, reinforcing support, or ambulance shuttles. Platoons or squads from the corps ground ambulance company will be in DS, or OPCON to, and collocated with the medical company in the division rear or BSA. These assets evacuate patients from the forward medical treatment elements.

(4) A corps air ambulance company designated to support a division may be deployed as OPCON, attached, or in DS of the division. For aeromedical evacuation when OPCON or attached, the air ambulance company is normally under the control of the DISCOM. The air ambulance company may collocate with the MSMC or aviation brigade and forward deploys air ambulance teams or crews to the FSMCs depending upon METT-TC. Air ambulance teams deployed to the FSMC will have the minimum number of aircraft required to accomplish the mission. The remaining aircraft are located with the company headquarters for reinforcement of the FSMC and an area support mission in the division rear.

f. Evacuation from Main Support Medical Company to Echelons III and IV Hospitals.

(1) The mission of the hospital system is twofold. First, it is designed to maximize the RTD of patients. Secondly, it provides the necessary treatment to stabilize patients for further evacuation. Patients are further evacuated when they are not expected to RTD within the limits of the theater evacuation policy.

(2) Hospitalization in the theater is provided at Echelons III and IV of the CHS system.

(*a*) The FST collocates with division medical companies to provide resuscitative surgery. (In some scenarios the FST may be collocated with an ASMC.) Patients are further stabilized and evacuated to Echelons III hospitals. (Field Manual 8-10-25 discusses the operation and employment of FSTs. Although the FST is not an Echelon III resource, its parent unit is the combat support hospital [CSH].)

(*b*) Forward-oriented CSHs (FM 8-10-14) are capable of treating all classes of patients; however, their primary mission is that of providing—

- Resuscitative surgery and trauma treatment.
- Returning patients to duty within prescribed CZ policies.

(*c*) Field hospitals (FHs) (FM 8-10-15) are designed to focus on RTD patients and specialize in reconditioning and rehabilitation. These hospitals are normally located in either EAC, but may be employed in the corps area, if required.

(*d*) General hospitals (GHs) (FM 8-10-15) are oriented toward the trauma patient but have sufficient balance to fulfill their area support role for all classes of patients. They are normally located in the EAC.

NOTE

Under MRI, there is only one basic type of hospital in the theater.

(3) Elements of the medical evacuation battalion are also tasked with corps interhospital transfer responsibilities and the movement of patients to USAF MASFs (this may be accomplished by air or

ground ambulances as determined by the commander). Corps area ground evacuation support is provided by the ASMB with its organic ambulance assets. This allows the medical evacuation battalion to focus its entire ground effort forward on the supported divisions and the movement of patients between corps hospitals.

(4) The organic ground evacuation assets of the MSMC provide evacuation support on an area basis.

4-4. Property Exchange and Patient Movement Items

a. United States Army Medical Evacuation Operations. Whenever a patient is evacuated from one MTF to another or is transferred from one ambulance to another, medical items of equipment (casualty evacuation bags [cold weather-type bags], blankets, litters, and splints) remain with the patient. To prevent rapid and unnecessary depletion of supplies and equipment, the receiving Army element exchanges like property with the transferring element. This reciprocal procedure will be practiced to the fullest extent possible through all phases of evacuation from the most forward element through the most rearward hospital.

b. United States Air Force Aeromedical Evacuation Operations. A major factor in the evacuation of patients is that specific medical equipment and durable supplies designated as patient movement items (PMI) must be available to support the patient during the evacuation. Examples of PMI include ventilators, litters, patient monitors, and pulse oximeters. These items will be available for exchange at the supporting ASFs and MASFs. Refer to Joint Pub 4-02.2 for additional information on PMI.

This subparagraph implements STANAG 2128 and QSTAGs 435 and 436.

c. Medical Property of Allied Nations (*NATO and ABCA armies*). Medical property accompanying patients of allied nations will be returned to the parent nation at once, if possible. If it is not possible, like items will be exchanged as in paragraph *a* above.

d. Medical Property of Coalition Forces or Allied Nations Without Ratified Standardization Agreements. Absent a formal agreement, such as an Acquisition and Cross-Servicing Agreement, medical property accompanying patients of coalition and allied forces without ratified STANAGs will be returned to the parent nation as soon as practicable. Commanders should consult with their Staff Judge Advocate early in the planning process to ensure appropriate policy and procedures are developed and disseminated.

4-5. Medical Evacuation Tools

It is essential that the evacuation plan for all combat operations be well conceived, planned, coordinated, and disseminated. In designing the medical evacuation plan, the CHS planner uses the following tools:

a. Patient Collecting Points. In fast-moving situations, PCPs normally are predesignated along the axis of advance or evacuation routes. Forward of the BAS, combat medics, combat lifesavers, and combat troops take casualties to the PCPs. These points facilitate acquisition by supporting ambulance teams and reduce evacuation time. When used by the BAS, PCPs help preserve BAS mobility, preclude carrying casualties forward, and reduce evacuation time to the rear. Patient collecting points designated by the division level of CHS concentrate patients along evacuation routes, increasing the efficiency of each ambulance mission to the treatment station. They also provide those units lacking organic medical support with a forward area for patient disposition. When designating a PCP, the designating authority makes a decision whether or not to provide medical staff at the location. This decision is based upon the assessment of risk versus the availability of personnel. Normally, the echelon of CHS designating the point is responsible for staffing. Combat health support personnel may not be available to staff these points, and combat lifesavers and ambulatory patients may be required to perform self-aid, buddy aid, or enhanced first aid. Patient collecting points should be identified on operational overlays (Figure 4-1).

NOTE

A PCP staffed by a trauma treatment team is designated as a BAS (minus) rather than as a PCP.

b. Ambulance Exchange Points. A position where patients are exchanged from one evacuation platform to another is designated as an AXP.

(1) These points are normally preplanned and are a part of the CHS annex to the OPLAN. In the forward area, the threat of enemy ground activities, large concentrations of lethal weapons systems, and effective use of antiaircraft weapons may dictate that the AXP be a predetermined rendezvous point for the rapid transfer of patients from one evacuation platform to another. The location of AXPs should be frequently changed to preclude attracting enemy fires.

(2) Ambulance exchange points are established for many different reasons. For example, the ambulance platoon of the heavy FSMCs now possesses a mixture of wheel and track ambulances. The track vehicles are provided so that they may keep up with maneuver elements. These vehicles carry the patients from the BAS to an AXP where the divisional wheel ambulances take over for the relatively longer trip to the rear. Ambulance exchange points are not limited to ground evacuation assets. Another example is a situation where the threat air defense artillery capability is such that air ambulances cannot fly as far forward as the BASs. However, an AXP could be established a few kilometers to the rear, still well forward of the BSA. The divisional track or wheel ambulances could then transfer the patients to the air assets, thereby facilitating the rapid evacuation of patients and realizing a significant timesavings.

(3) By using AXPs, evacuation assets are returned to their supporting positions faster. This facilitates evacuation as the returning crews are familiar with the road network and the supported unit's tactical situation. In the case of air ambulance assets, it is important because of the requirements for integration into the A2C2 system at each level and the enhancement to survivability provided by current threat and friendly air defense information.

c. Ambulance Shuttle System. The ambulance shuttle system (Figure 4-2) is an effective and flexible method of employing ambulances during combat. It consists of one or more ambulance loading points, relay points, and when necessary, ambulance control points, all echeloned forward from the principal group of ambulances, the company location, or basic relay points as tactically required.

(1) *Ambulance loading point.* This is a point in the shuttle system where one or more ambulances are stationed ready to receive patients for evacuation.

(2) *Ambulance relay point.* This is a point in the shuttle system where one or more empty ambulances are stationed. They are ready to advance to a loading point or to the next relay post to replace an ambulance that has moved from it. As a control measure, relay points are generally numbered from front to rear.

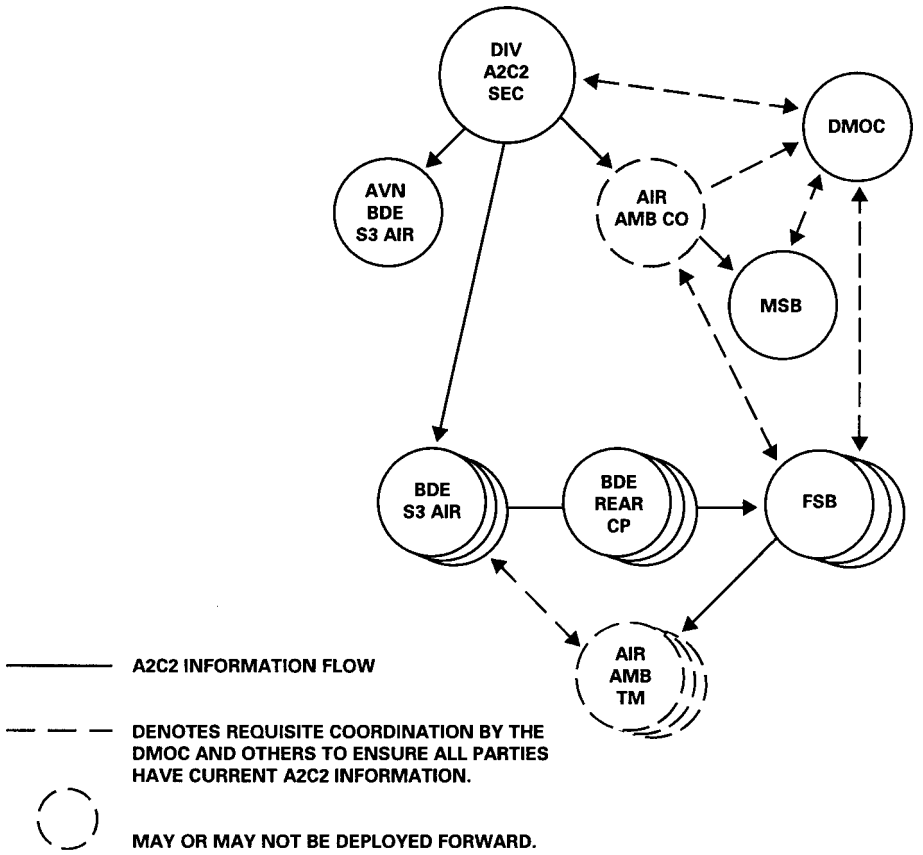

Figure 4-2. Ambulance shuttle system.

(3) *Ambulance control point*. The ambulance control point consists of a soldier (from the ambulance company or platoon) stationed at a crossroad or road junction where ambulances may take one of two or more directions to reach loading points. The soldier, knowing from which location each loaded ambulance has come, directs empty ambulances returning from the rear. The need for control points is dictated by the situation. Generally, they are more necessary in forward areas.

(4) *Establishment of the ambulance shuttle*. Once the relay points are designated, the required number of ambulances are stationed at each point. If the tactical situation permits, the ambulances may be delivered to the relay points by convoy.

(5) *Staffing of relay, loading, and ambulance control points*. Important points may be manned to supervise the blanket, litter, and splint exchange (paragraph 4-4) and to ensure that messages and medical supplies to be forwarded are expedited.

(6) *Advantages of the ambulance shuttle system*. This system—

- Places ambulances at PCPs and BASs as needed.
- Permits a steady flow of patients through the system to MTFs.
- Avoids unnecessary massing of transport in forward areas.
- Minimizes the danger of damage to ambulances by the enemy.
- Permits the commander or platoon leader to control his elements and enables him to extend their activities without advancing the headquarters.
- Facilitates administration and maintenance.
- Maximizes the use of small C2 elements (sections or platoons) to operate the ambulance shuttle without employing the entire parent unit.
- Provides for flexible use of other ambulance assets for specific situations.

d. Obstacles Marking. Ambulance crews must know and recognize the standard land/gap marking patterns. Unit TSOPs on the types of materials used should be available to ambulance crews. Refer to FM 90-13-1 for additional information.

4-6. Medical Evacuation Support for Combat Forces in the Offense and Defense

a. Support to the Offense.

(1) The offense is the decisive form of war, the commander's only means of attaining a positive goal or of completely destroying an enemy force (FM 100-5). The offense is characterized by rapid

movement, deep penetrations, aggressive action, and the ability to sustain momentum regardless of counterfires and countermeasures.

(2) When considering the evacuation plans to support an offensive action, the CHS planner must consider many factors (FM 8-55). The forms of maneuver, as well as the enemy's capabilities, influence the character of the patient workload and its time and space distribution. The analysis of this workload determines the allocation of CHS resources and the location or relocation of MTFs.

(3) Evacuation support of offensive operations must be responsive to several essential characteristics. As operations achieve success, the areas of casualty density move away from the supporting facilities. This causes the routes of medical evacuation to lengthen. Heaviest patient workloads occur during disruption of enemy main defenses, at terrain or tactical barriers, during the assault on final objectives, and during enemy counterattacks. The accurate prediction of these workload points by the CHS planner is essential if medical evacuation operations are to be successful.

(4) In traditional combat operations, the major casualty area of the division is normally the zone of the main attack. As the main attack accomplishes the primary task of the division, it receives first priority in the allocation of combat power. The allocation of combat forces dictates roughly the areas which are likely to have the greatest casualty density. As a general rule, all division MTFs are located initially as far forward as combat operations permit. This allows the maximum use of these facilities before lengthening evacuation lines force their displacement forward.

(5) In operations that feature deep battles with WMD targeted at supporting logistical bases, mass casualty operations may be conducted in rear areas.

(6) As advancing combat formations extend control of the battle area forward, supporting medical elements overtake patients. This facilitates the acquisition of the battle wounded and reduces the vital time elapsed between wounding and treatment. In offensive operations, two basic problems confront the supporting evacuation units. First, contact with the supported unit must be maintained. Responsibility for the contact follows the normal CHS pattern—rear to front. The contact is maintained by forward deployed air and ground evacuation resources. Secondly, the mobility of the MTFs supporting the combat formations must be maintained. Periodically, division medical companies, FSTs, and CSHs are cleared so that they may move forward. This requirement for prompt evacuation of patients from forward MTFs requires available ambulances to be echeloned well forward from the outset. The requirement for periodic movement of large numbers of patients from divisional and corps facilities further stresses the evacuation system.

(7) Types of operations in the offense include—

(*a*) *Movement to contact*. Medical evacuation support in movement to contact is keyed to the tactical plan. Prior deployment of evacuation resources with parent and supported units permits uninterrupted and effective evacuation support. (Refer also to paragraph 4-3*c*[5].)

(*b*) *Exploitation and pursuit*. Evacuation support of exploitation and pursuit operations resembles those discussed for the envelopment (paragraph 4-7*a*[2]). Since exploitation and pursuit operations

can rarely be planned in detail, evacuation operations must adhere to TSOPs and innovative C2. These actions are often characterized by—

- Decentralized operations.
- Unsecured ground evacuation routes.
- Exceptionally long distances for evacuation.
- Increased reliance on convoys and air ambulances.

(*c*) *Attack*. Refer to paragraph 4-6*a*(4) above. A sample overlay of a brigade attack is depicted in Figure 4-3.

b. *Support to the Defense*. There are three forms of the defense: area defense, mobile defense, and retrograde. The area defense concentrates on denying enemy access to designated terrain for a specific period of time, rather than on the outright destruction of the enemy. The mobile defense focuses on denying the enemy force by allowing him to advance to a point where he is exposed to a decisive counterattack by the striking force. The primary defeat mechanism, the counterattack, is supplemented by the fires of the fixing force. The third form of defense is the retrograde. The retrograde is an organized movement to the rear and away from the enemy. The enemy may force these operations or a commander may execute them voluntarily. Within the retrograde operation there are three forms: delay, withdrawal, and retirement.

(1) Support is generally more difficult to provide in the defense. The patient load reflects lower casualty rates, but forward area patient acquisition is complicated by enemy actions and the maneuver of combat forces. Medical personnel are permitted much less time to reach the patient, complete vital EMT, and remove him from the battle site. Increased casualties among exposed medical personnel further reduce the medical treatment and evacuation capabilities. Heaviest patient workloads, including those produced by enemy artillery and NBC weapons, may be expected during the preparation or initial phase of the enemy attack and in the counterattack phase. The enemy attack may disrupt ground and air routes and delay evacuation of patients to and from treatment elements. The depth and dispersion of the defense create significant time and distance problems for evacuation assets. Combat elements may be forced to withdraw while carrying their remaining patients to the rear. The enemy exercises the initiative early in the operation which may preclude accurate prediction of initial areas of casualty density. This makes the effective integration of air assets into the evacuation plan essential. The use of air ambulances must not only be integrated into the CHS annex to the operation order (OPORD), but also into the A2C2 annex. A medical overlay for a defensive operation is depicted in Figure 4-4.

(2) The support requirements for retrogrades may vary widely depending upon the tactical plan, the enemy reaction, and the METT-TC factors. Firm rules that apply equally to all types of retrograde operations are not feasible, but considerations include—

- Requirement for maximum security and secrecy in movement.

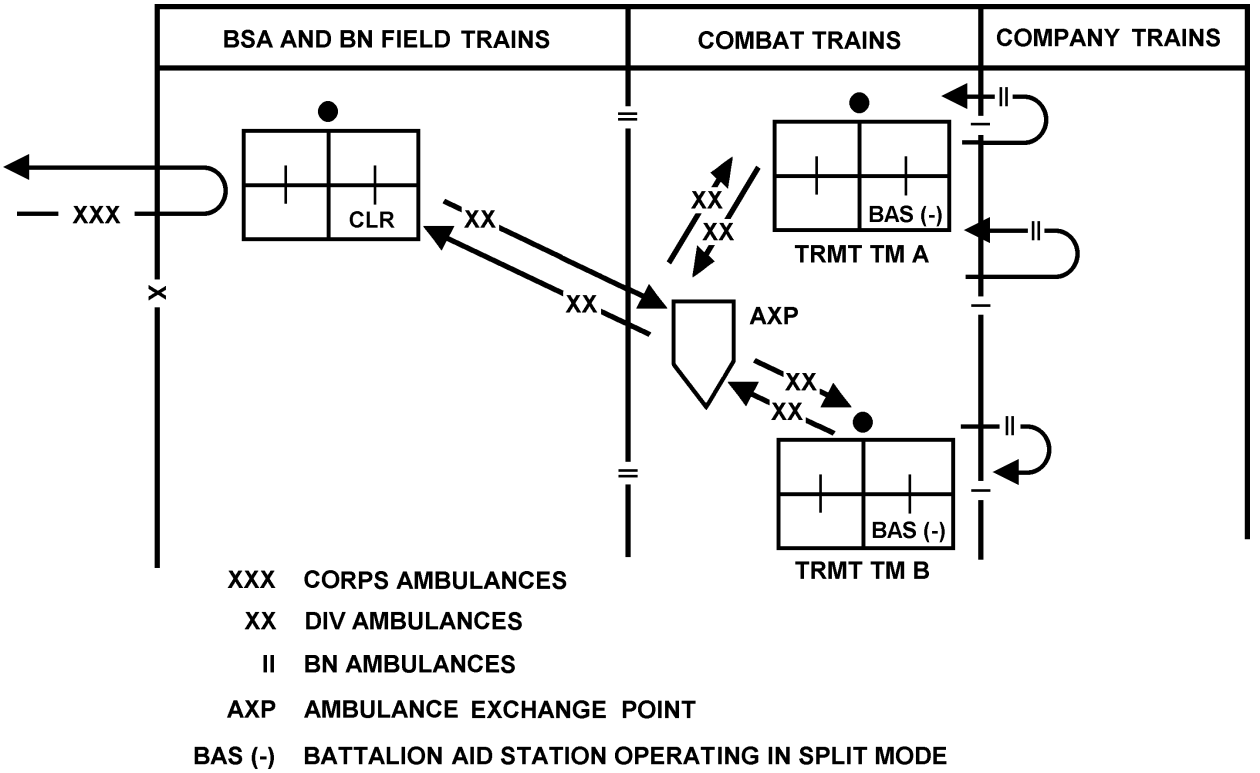

Figure 4-3. Medical overlay to brigade attack.

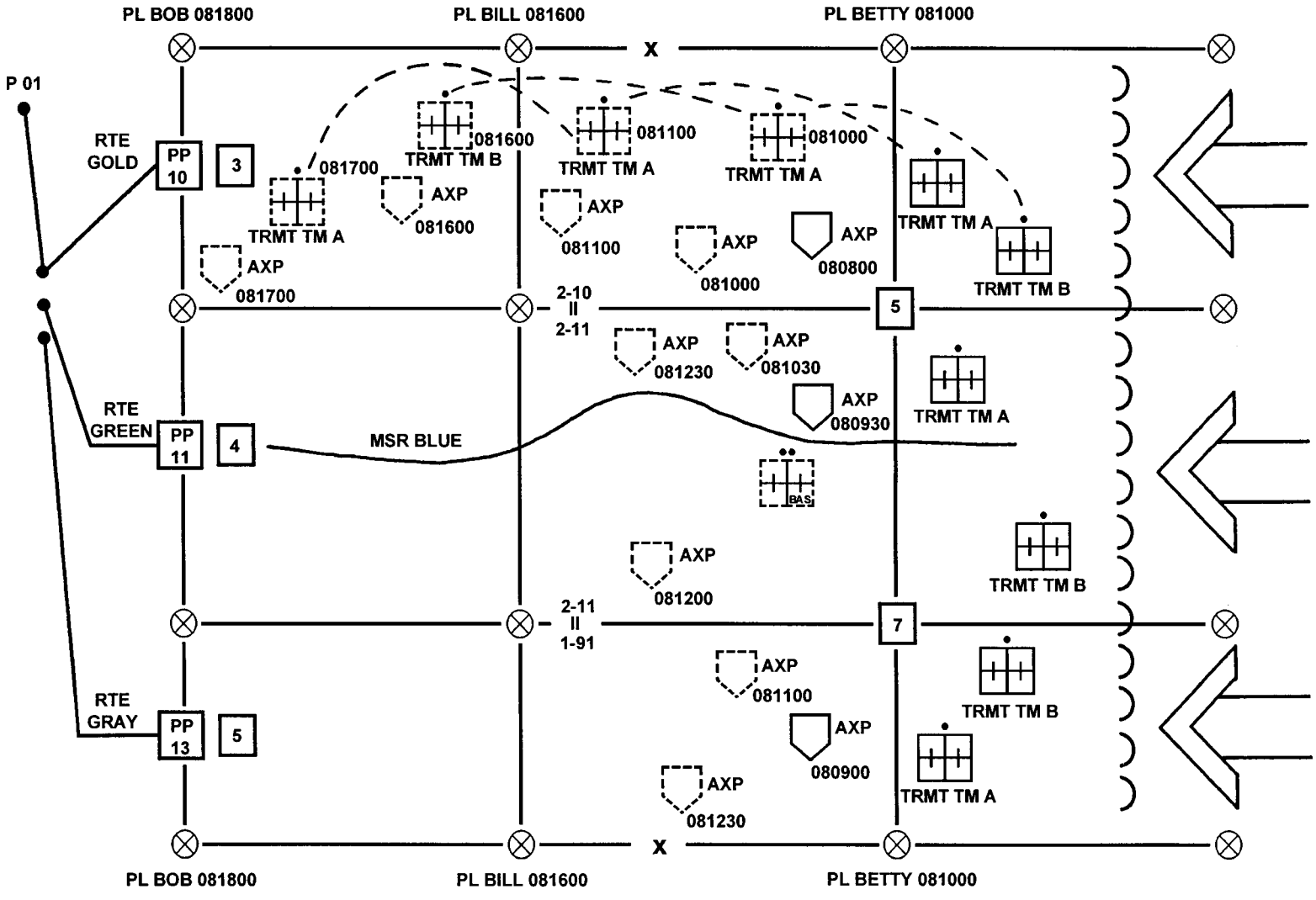

NOTE 1: FOR SIMPLIFICATION, ONLY ONE TASK FORCE (TF 2-10) IS DETAILED.
NOTE 2: AXPs ARE TIME SEQUENCED TO SUPPORT BRIGADE DELAY OPERATIONS.

Figure 4-4. Medical overlay to brigade delay.

- Influence of refugee movement that may impede medical evacuation missions conducted in friendly territory.

- Integration of evacuation routes and obstacle plans should be accomplished.

- Difficulties in controlling and coordinating movements of the force which may produce lucrative targets for the enemy.

- Movements at night or during periods of limited visibility.

- Time and means available to remove patients from the battlefield. In stable situations and in the advance, time is important only as it affects the physical well-being of the wounded. In retrograde operations, time is more important. As available time decreases, CHS managers at all echelons closely evaluate the capability to collect, treat, and evacuate all patients.

- Medical evacuation routes will also be required for the movement of troops and materiel. This causes patient evacuation in retrograde movements to be more difficult than in any other type of operation. Command, control, and communications may be disrupted by the enemy. Successful medical evacuation requires including ambulances on the priority list for movement; providing for the transportation of the slightly wounded in cargo vehicles; and providing guidance to subordinate commanders defining their responsibilities in collecting and evacuating patients. Special emphasis must be placed on the triage of patients and consideration given to the type of transportation assets available for evacuation.

- When the patient load exceeds the means to move them, the tactical commander must make the decision as to whether patients are to be left behind. The medical staff officer keeps the tactical commander informed in order that he may make a timely decision. Medical personnel and supplies must be left with patients who cannot be evacuated. (Refer to FM 8-10 for additional information.)

4-7. Medical Evacuation Support for Choices of Maneuver and Enabling Operations

a. Choices of Maneuver.

(1) *Penetration*. In this tactic, the attack passes through the enemy's principal defensive position, ruptures it, and neutralizes or destroys the enemy forces. Of all forms of offensive maneuver, the penetration of main enemy defenses normally produces the heaviest medical evacuation workload. Patient acquisition starts slowly, but becomes more rapid as the attack progresses. The evacuation routes lengthen as the operation progresses. The penetration maneuver is often preceded by heavy preparatory fires which may evoke heavy return fire. These enemy fires may modify the decision to place evacuation assets as far forward as possible. Patient evacuation may be slow and difficult due to damage to roads or the inaccessibility of patients. Evacuation support problems multiply when some combat units remain near the point of original penetration. This is done to hold or widen the gap in enemy defenses while the bulk of division forces exploit or pursue the enemy. Treatment elements are placed near each shoulder of the penetration; ground evacuation cannot take place across an avenue of heavy combat traffic. Besides the heavy traffic, the area of the penetration is normally a target for both conventional and NBC weapons.

(2) *Envelopment*. In the envelopment, the main or enveloping attack passes around or over the enemy's principal defensive positions. The purpose is to seize objectives which cut his escape routes and subject him to destruction in place from flank to rear. Since the envelopment maneuver involves no direct breach of the enemy's principal defensive positions, the medical evacuation system is not confronted with a heavy workload in the opening phase. Ambulances are echeloned well forward in all echelons of CHS to quickly evacuate the patients generated by suddenly occurring contact. Medical treatment facilities moving with their respective formations overtake patients during evacuation and reduce delays in treatment. After triage and treatment, the patients are evacuated to corps-level facilities by accompanying corps assets. When the isolated nature of the envelopment maneuver precludes prompt evacuation, the patients are carried forward with the treatment element. Again, nonmedical vehicles may be pressed into emergency use for this purpose. When patients must be carried forward with the enveloping forces, CHS commanders use halts at assembly areas and phase lines to arrange combat protection for ground ambulance convoys through unsecured areas. Further, the commander may take advantage of friendly fires and suppression of enemy air defenses to call for prearranged air ambulance support missions, or emergency use of medium-lift helicopter backhaul capabilities.

(3) *Infiltration*.

(*a*) Infiltration is a choice of maneuver used during offensive operations. The division can attack after infiltration or use it as a means of obtaining intelligence and harassing the enemy. Though it is not restricted to small units or dismounted actions, the division employs these techniques with a portion of its units, in conjunction with offensive operations conducted by the remainder of its units.

(*b*) Combat health support of infiltration is restricted by the amount of medical equipment, supplies, and transportation assets that can be introduced into the attack area. No deployment of division-level medical units without their organic transportation should be attempted. Elements of unit-level CHS should be accompanied by their organic vehicles, and ambulances should receive priority for deployment. It may be necessary to man-carry enough BAS equipment into the attack area to provide EMT and ATM; however, this results in degrading mobility. When the element is committed without its ambulances, patients are evacuated to the BAS by litter bearer teams. This requires reinforcement of the medical platoon by division or corps medical personnel or improvisation of litter teams using combat troops (if available and approved by the tactical commander). Patient evacuation from the BAS and medical resupply of the force may be provided by litter bearers, depending upon distances and degree of secrecy required.

(*c*) When airborne and air assault forces are used, infiltrating elements may land at various points within the enemy's rear area and proceed on foot to designated attack positions. As in surface movement, the amount of medical equipment taken may be limited. In airborne operations, the evacuation of patients will be by litter bearers or frontline ambulances to PCPs or the BAS and then by division-level ambulances to the clearing station. In air assault operations, the evacuation is by litter bearers to PCPs or to the BAS and then by air ambulances to a clearing station. Once the combat element begins the assault on the objective, secrecy is no longer important and its isolated location requires CHS characteristic to airborne and air assault operations until ground linkup.

(4) *Turning movement*. The turning movement is a variant to the envelopment in which the attacker attempts to avoid the defense entirely; rather, the attacker seeks to secure key terrain deep in the

enemy's rear and along his LOCs. Faced with a major threat to his rear, the enemy is thus "turned" out of his defensive positions and forced to attack rearward at a disadvantage.

- General MacArthur's invasion at Inchon during the Korean War is an example of a classic turning movement. Casualties were initially light as the main defenses were avoided; however, as the invasion developed, resistance stiffened and higher casualty rates were experienced. Further, as fighting occurred in a populated area (Seoul), significant civilian casualties resulted. The lack of Korean health care providers caused many of these civilians to seek medical aid from US field medical units.

- Medical evacuation support to the turning movement is provided basically in the same manner as to the envelopment. As the operation is conducted in the enemy's rear area, LOCs and evacuation routes may be unsecured resulting in delays in resupply and evacuation. In the Inchon example, a hospital ship was located off the coast to accept patients evacuated from the fighting. However, due to the precarious tides, evacuation and resupply were often delayed for hours and sometimes days since the harbor could not be navigated by small vessels. It was not until Kimpo Airfield fell that timely evacuation could occur. The deployed CHS units must be able to quickly clear the battlefield of patients, evacuate them from the forward areas, and sustain the patients in rear areas until evacuation routes are established.

b. Enabling Operations.

(1) *Passage of lines*. This situation presents a challenge for the CHS planner. There will be a number of medical evacuation units using the same air and road networks. Coordination and synchronization are essential if confusion and overevacuation are to be avoided. The information required to operate in the division AO includes—

- Radio frequencies and call signs.
- Operations plans and TSOPs.
- Location of MTFs.
- Location of PCPs and AXPs.
- Main supply route, forward arming and refueling points (FARP), and A2C2 data.

(2) *Security operations*. The covering forces are dependent upon organic resources found in the maneuver battalion medical platoon for initial support. The level of command for the covering force (division or corps) determines the responsibility for the subsequent evacuation plan. In a corps covering force, for example, the corps CHS structure has the responsibility for establishing and operating the medical evacuation system to support the forward deployed corps forces. This is done to prevent the divisions following the covering forces from becoming overloaded with patients prior to the hand off and passage of lines. The use of PCPs, AXPs, and nonmedical transportation assets (CASEVAC) to move the wounded is essential. The covering force battle may be extremely violent. Patient loads will be high and the distance to MTFs may be much longer than usual. The effectiveness of the medical evacuation system depends upon the forward positioning of a number of ground ambulances and the effective integration of corps air ambulances into the evacuation plan.

(3) *Advance, flank and rear guards*. These forces normally receive medical evacuation support through the attachment of evacuation teams. The teams evacuate patients to predesignated PCPs along a main axis of advance or to the nearest treatment element providing area support. Employment of air ambulances provides a measure of agility and flexibility.

(4) *River crossing operations*. The river barrier itself exerts decisive influence on the use of divisional medical units. Attack across a river line creates a CHS delivery problem comparable to that of the amphibious assault. Combat health support elements cross as soon as combat operations permit. Early crossing of treatment elements reduces turnaround time for all crossing equipment that is used to load patients on the far shore. Maximum use of air ambulance assets is made to prevent excessive patient buildup in far shore treatment facilities. Near shore MTFs are placed as far forward as assault operations and protective considerations permit to reduce ambulance shuttle distances from off-loading points. For detailed information on river crossing operations, refer to FM 90-13.

(5) *Reconnaissance operations*. The reconnaissance in force is an *attack* to discover and test the enemy's position and strength or to develop other intelligence. The division usually probes with multiple combat units of limited size, retaining sufficient reserves to quickly exploit known enemy weaknesses. Combat health support techniques follow those discussed for a movement to contact (paragraph 4-6*a*). Ambulances are positioned well forward at both unit and division levels. Ambulances are moved at night to enhance secrecy. The echeloning of ambulances is an indication to the enemy that an attack is imminent due to the forward placement of CHS. Clearing stations are not established until a significant patient workload develops. Patients received at BASs of reconnoitering units are evacuated to clearing stations as early as practical, or are carried forward with the force until a suitable opportunity for evacuation presents itself. Maximum possible use of air ambulance assets is made to cover extended distances and to overcome potentially unsecured ground evacuation routes.

(6) *Unified action*. The majority of operations occurring at the present time are joint, interagency, or multinational operations. The CHS planner must determine in the initial planning stages of these operations whose responsibility it is to provide medical evacuation support to the force. The CHS planner must also ensure that duplications in support do not exist, guidelines are established as to eligible beneficiaries and when individuals are to be returned to their own nation's health care delivery system, and what mechanisms exist for reimbursement of services. For additional information, refer to FM 8-42.

(7) *Integrated warfare operations*. Medical evacuation in an NBC environment is discussed in paragraph 5-6.

4-8. Medical Evacuation Support in Stability Operations

a. Overview of Stability Operations.

(1) Stability operations apply military power to influence the political environment, facilitate diplomacy, and interrupt specified illegal activities. They include both developmental and coercive actions. *Developmental actions* enhance a government's willingness and ability to care for its people. *Coercive actions* apply carefully prescribed limited force and the threat of force to achieve objectives. The types of activities conducted in stability operations include—

- Peace operations.
- Operations in support of diplomatic efforts.
- Combatting terrorism operations.
- Counterdrug operations.
- Noncombatant evacuation operations (NEO).
- Arms control.
- Nation assistance and foreign internal defense.
- Support to insurgencies.
- Support to counterinsurgencies.
- Shows of force.
- Civil disturbance operations.

(2) While each operation in this environment is unique, there are seven broad imperatives which enhance the deployed forces' ability to develop concepts and schemes for executing stability operations. These imperatives are to—

- Stress force protection.
- Emphasize information operations.
- Maximize interagency, joint, and multinational cooperation.
- Display the capability to apply force without threatening.
- Understand the potential for disproportionate consequences to individual and small unit actions.
- Apply force selectively and discriminantly.
- Act decisively to prevent escalation.

b. Medical Evacuation Support.

(1) Medical evacuation support to forces deployed in stability operations is dependent upon the specific type of operation, anticipated duration of the operation, number of forces deployed, theater

evacuation policy, medical troop ceiling, and anticipated level of violence. In most situations, medical evacuation support follows the traditional support provided to combat forces. If there is a shortened theater evacuation policy, a limited medical troop ceiling, and limited hospitalization assets within the AO, organic and DS ambulance support is provided from the point of injury to the supporting Echelons I or II MTF and, once the patient is stabilized for further evacuation, from the treatment element to an airfield for evacuation out of the theater.

(2) During NEO, those persons who are injured, wounded, or ill are treated and stabilized by the medical element accompanying the NEO force. Once stabilized, they are evacuated by the NEO force. In NEO conducted in a permissive environment (no apparent physical threat to the evacuees), sick, injured, or wounded persons should be evacuated on dedicated medical evacuation platforms, if at all possible. In an uncertain or hostile environment, the transportation assets used to insert and extract the NEO force are normally used to evacuate the patients. The medical personnel accompanying the force provide en route medical care until the NEO force reaches an intermediate staging base (ISB) or safe haven. Those evacuees requiring medical care are then transferred to dedicated medical evacuation platforms for further evacuation to MTFs capable of providing the required care.

(3) During combatting terrorism operations, planning considerations for medical evacuation support include—

- Using medical and nonmedical transportation assets to evacuate casualties in mass casualty situations. If nonmedical assets are used, planning should include augmenting these assets with medical personnel to provide en route medical care.

- Applying techniques for acquiring and evacuating patients under hostile fire or on adverse terrain (from rubble or from above or below ground level. (Refer to paragraph 5-10 for additional information.)

- Ensuring security measures (such as establishing checkpoints, screening personnel and vehicles, and limiting access to the MTF area) are implemented.

(4) In nation assistance, support to insurgencies, and support to counterinsurgencies, medical evacuation personnel may be called upon to assist in the development of a medical evacuation system for the supported nation/group; teach civilian, military, or paramilitary personnel basic evacuation techniques and the treatment protocols for providing provision of en route medical care; or provide the more traditional support from the point of injury to the supporting treatment element.

(5) For additional information, refer to FM 8-42.

4-9. Medical Evacuation Support in Support Operations

a. Support operations provide essential supplies and services to assist designated groups. They are conducted mainly to relieve suffering and help civil authorities respond to crises. In most cases, Army forces achieve success by overcoming conditions created by man-made or natural disasters. The ultimate

goal of support operations is to meet the immediate needs of designated groups and transfer responsibility quickly and efficiently to appropriate civilian authorities. Support operations, which consist of humanitarian assistance and environmental assistance accomplish one or more of the following: save lives; reduce suffering; recover essential infrastructure; improve quality of life; and restore situations to normal. The seven broad support imperatives are to—

- Secure the force.
- Provide essential support to the largest number of people.
- Coordinate actions with other agencies.
- Hand over to civilian agencies as soon as feasible.
- Establish measures of success.
- Conduct robust information operations.
- Ensure operations conform to legal requirements.

b. Humanitarian assistance operations can include a number of activities such as disaster relief, domestic support, refugee assistance, the provision of medical care to isolated populations, and refeeding programs resulting from famines or natural disasters. Medical evacuation assets may be used to evacuate the injured from disaster sites, to provide the emergency transport of critically needed medical supplies and personnel to remote locations, or to perform emergency rescues during times of flooding, wild fires, or other natural disasters.

c. Further, medical evacuation assets may perform community assistance missions such as the Military Assistance to Safety and Traffic (MAST) program, where an air ambulance unit provides evacuation support to the nearby civilian community. (For additional information, refer to Army Regulation AR 500-4 and FM 8-10-26.)

4-10. Medical Evacuation of Enemy Prisoners of War

Sick, injured, and wounded enemy prisoners of war (EPWs) are treated and evacuated in military police (MP) channels when possible. They must be physically segregated from US, allied, and coalition patients. Guards for these prisoners are provided in accordance with the division or corps TSOP and are from other than medical resources. The echelon commander is normally responsible for this support.

a. United States medical personnel decide if EPWs are healthy enough to be escorted within MP channels or if they need to be medically evacuated. Generally, ambulatory prisoners remain within the MP channels and litter patients are evacuated through medical channels.

b. The US provides the same standard of medical care for wounded, sick, and injured EPWs as that given to US, allied, and coalition soldiers. Wounded, sick, or injured EPWs in the CZ may be treated

and returned to MP channels for evacuation; or the EPWs may be stabilized and moved through medical channels to the rear as far and as quickly as possible. Enemy prisoners of war are moved to corps or EAC hospitals for treatment.

c. When EPWs are evacuated through medical channels, medical personnel—

- Report this action through medical channels to the next higher headquarters.
- Request disposition instructions from the corps MRO.

d. The corps MRO is responsible for—

- Coordinating the transportation means.
- Identifying the MTF to which the EPWs will be taken.
- Coordinating, in conjunction with the hospital commander, with the branch Prisoner of War Information Center (PWIC) to account for EPWs within medical channels.

4-11. Evacuation and Disposition of Remains

a. The transportation and disposition of remains is a Quartermaster function. Air and ground ambulance personnel do not clear the battlefield of remains nor do they carry remains in their dedicated medical vehicles or aircraft. Medical units do not accept remains or provide temporary morgues in which to hold remains for other units until they can be transferred to MA sites/personnel.

b. The only remains that a medical unit handles are those of its own unit members or of patients who are dead on arrival (DOA) or who died of wounds (DOW) while in their care. Whenever a medical unit must establish a temporary morgue, it should be established out of sight of the triage and treatment areas. This area can be established behind a natural barrier, such as a stand of trees or it can be set off by using tentage and tarpaulins. This is not an actual morgue, as it has neither the required equipment nor is it staffed; it is only a temporary holding area.

c. For additional information, refer to FMs 8-10 and 8-10-1.

4-12. Aeromedical Evacuation Operations

a. The effectiveness and efficiency of the AMEDD is enhanced by the air ambulance's capabilities to—

- Remove patients from otherwise inaccessible areas.
- Circumvent fixed defenses and natural obstacles.

- Deliver medical supplies and blood products.
- Provide a rapid evacuation means.
- Provide emergency airlift of medical personnel, equipment, and supplies.

b. Individual medical evacuation mission requests are processed through communications channels designated in the CHS annex of the OPLAN or OPORD. Mission control is retained by the appropriate CHS headquarters commander.

c. Medical evacuation missions are based upon requests from units within the CZ requiring CHS. Requests for augmentation or reinforcement of aeromedical evacuation capabilities are made by the controlling CHS headquarters. Since the majority of requests for medical evacuation originate in the division, the basic concept of mission control is oriented on this requirement. Mission requests are processed through the fastest and most reliable means available. A sole-user channel is desirable for the expedient transmission of medical evacuation requests. Within their area of responsibility, surgeons at various levels of command may monitor requests and recommend priorities for patient evacuation.

d. Direct aeromedical evacuation support is normally provided to each division (from the corps) by one air ambulance company. It is the mission of this company to—

- Evacuate selected patients within the division.
- Transport medical elements to areas where they are critically needed.
- Ensure the uninterrupted delivery of blood, blood products, biologicals, and medical supplies.
- Provide for air crash rescue (less fire suppression).
- Rescue downed aircrews (refer to paragraph 1-13 for additional information).

e. In addition to the air ambulance company (DS) operating in the division area, aeromedical evacuation support is provided by one or more air ambulance companies (GS) in the corps. Their primary mission is to augment and reinforce forward deployed air ambulances units. To accomplish this mission, they—

- Evacuate patients from FSMC, MSMC, and FST to corps hospitals.
- Evacuate patients from combat, CS, and combat service support (CSS) units operating between division rear and corps rear boundaries.
- Evacuate patients between corps-level hospitals and intermediate staging points (MASFs, railheads, and seaports).

- Transport medical teams and squads, as required.
- Deliver blood and blood products, medical supplies, and biologicals.
- Rescue downed aircrews.

f. The aeromedical evacuation mission requests are referred to the air ambulance unit or team supporting the particular echelon of health care. Proper flight clearance is obtained as the mission is accepted. If the mission cannot be accepted, the commander will coordinate with either lateral or rear supporting air ambulance units.

g. Aeromedical evacuation support, which exceeds the capabilities of the assets available at division, becomes the responsibility of the medical evacuation battalion commander. He adjusts evacuation capabilities between supported divisions through his unit commanders based on the tactical situation and patient densities. The air evacuation unit commanders coordinate and receive flight missions, as appropriate. The requesting unit is notified, if possible, as to the estimated time of arrival for the support. If evacuation requirements overwhelm available medical evacuation battalion assets, the medical evacuation battalion coordinates for additional corps-level assets. When nonmedical aircraft are used to meet the requirements for peak periods of patient evacuation, every attempt should be made to furnish medical personnel and equipment for en route medical care. The use of nonmedical assets requires intensive preplanning to ensure availability of assets when needed. One source of personnel and equipment may be from the additional treatment teams of the MSMC. In instances when the evacuation system becomes overwhelmed, every available space on general purpose aircraft may be used to transport those less severely injured without provisions for en route medical care. Regardless of the method used, control of nonmedical assets is maintained through medical channels regarding the designation of the point of origin, the casualties to be carried, and the destination.

h. Medical regulating remains the responsibility of the corps medical brigade or group. However, coordination for the medical evacuation of patients to the FST or CSH from the FSMC or MSMC is accomplished by the DMOC. Medical regulating out of the division is accomplished procedurally and must be preplanned to ensure proper pre-mission planning by both ground and air units.

i. For additional information on the medical company, air ambulance, refer to Chapter 3, Section III of this manual and FM 8-10-26.

4-13. Evacuation of Military Working Dogs

Military working dogs (MWDs) when injured or ill may be evacuated on any transportation means available. The using unit is responsible for the evacuation of the animal. Use of dedicated medical evacuation assets (air or ground ambulances) is authorized based on mission priority and availability. When possible, the handler should accompany the animal during the evacuation. Using units should include the location of veterinary support units on operational overlays.

CHAPTER 5

MEDICAL EVACUATION IN SPECIFIC ENVIRONMENTS

5-1. General

This chapter addresses medical evacuation in specific environments or under special circumstances. The medical evacuation effort must be well planned and its execution synchronized to be effective. Further, medical evacuation personnel must be flexible and ready to improvise, if needed, to meet the demands of unique situations.

5-2. Mountain Operations

a. In the past, armies have experienced great difficulty in evacuating patients from mountainous areas. Mountain environments are extremely diverse in nature. Some mountains are dry and barren with temperatures ranging from extreme heat in the summer to extreme cold in the winter. In tropical regions, mountains are frequently covered by lush jungles and heavy seasonal rains occur. Many areas display high rocky crags with glaciated peaks and year-round snow cover. Elevations can also vary from as little as 1,000 feet to over 16,000 feet with drastic and rapidly occurring weather changes.

b. Operations in mountainous terrain require some procedure modifications. This is due to the environmental impact on personnel and equipment. Important physical characteristics and considerations that influence medical evacuation are—

- Rugged peaks, steep ridges, and deep valleys.
- Limited number of trafficable roads.
- Reduced communications ranges.
- Unpredictability of and severe changes in weather.
- Decreased partial pressure of oxygen.
- Limited availability of landing zones (LZs).

c. In order to effectively support the tactical plan, the CHS plan must provide maximum flexibility. The CHS planner should consider using all means of evacuation. Due to the length of evacuation times and the limited means of ground evacuation, it is important to triage and prioritize patients prior to movement.

(1) The availability of improved, hard-surfaced roads is extremely limited, if they exist at all. Usually, improved roads are only found in valley corridors. Such roads are often dependent upon a system of narrow bridges spanning mountain streams and ravines. They may also twist along ridgelines and cling to steep shoulders.

(2) Secondary roads and trails may be primitive and scarce. However, they may provide the only routes capable of vehicular traffic. Cross-compartment travel between adjacent valleys may be impossible by ground vehicle. Off-road travel requires detailed planning, even for short distances.

(3) Because of rough terrain, the FSMC may not be able to reach the BAS by ground vehicle. An ambulance shuttle system is established with an AXP for air and ground evacuation vehicles to meet litter bearers. Litter bearers and beasts of burden may be the only means of evacuation available. Any available personnel may be used as litter bearers (nonmedical personnel from supported units may be required to augment the litter bearer teams). Close coordination between FSMC and BASs in establishing PCPs or AXPs is necessary to—

- Reduce distance traveled by litter bearers.
- Reduce evacuation time.
- Conserve personnel.
- Locate the best potential LZs for air ambulances.

(4) In mountainous areas, evacuation of patients by air is the preferred means. Air ambulances permit the rapid movement of patients over rugged terrain. For example, to travel a distance of only 6 kilometers on foot could take up to 2 hours, while flying time could be less than 2 minutes.

(5) Frequency-modulated (FM) radios are the principal means of communication in this environment. The ability to transmit is hampered by the limitations of line of sight transmissions.

(6) The briefing of ambulance drivers needs to be extensive, including detailed strip maps and overlays. Further, specific instructions on what to do in various situations should be covered (such as if the vehicle breaks down or the unit moves).

d. The mountain environment, with its severe and rapidly changing weather, impacts on aircraft performance capabilities; accelerates crew fatigue; and requires special flying techniques. Having to rely on continuous aviation support for a successful mountain operation is risky.

(1) Flying in mountainous areas requires special training. Both the terrain and the weather influence basic flying techniques and operational planning. Rugged, mountainous terrain complicates flight route selection. Direct routes can seldom be flown without exposing the aircraft to detection and destruction by the enemy.

(2) Important considerations for aeromedical operations in mountainous areas are—

(*a*) *Density altitude*. Density altitude is the most important factor affecting aircraft performance. Density altitude combines temperature, humidity, and pressure altitude, and provides the basis for lift capability. Density altitude can vary significantly between the pickup point and the LZ because of the time of day and changes in elevation. Frequent performance planning updates are essential.

(*b*) *Wind*. Unpredictable winds can produce significant turbulence, wind sheers, updrafts, and downdrafts. This further increases the risk of a catastrophe in a seemingly routine mission. Adverse winds along with high density altitude demand current and accurate performance planning. Pilots must plan for greater margins of safety.

(*c*) *Icing*. Ice can clog intake ports, thus starving the engine of air, or it can collect on rotor blades resulting in a significant loss of lift. Asymmetrical shedding can cause severe out-of-balance rotor conditions.

(*d*) *Visibility*. Low clouds or fog greatly decrease the ability to navigate or to avoid obstacles.

(*e*) *Lack of landing zones*. The characteristics of mountain terrain do not usually afford adequate LZs. The terrain may only allow the aircraft to hover while loading patients on board.

(*f*) *Hoist operations*. Use of the internal or external rescue hoist (Appendix E) can be expected in mountainous terrain. Mounting the rescue hoist on the aircraft as standard equipment in mountain operations may be required. When possible, orientation and training sessions with supported troops should be conducted to help minimize the difficulty of such missions. Depending on the terrain, the forest penetrator may also be needed to accomplish the mission.

(*g*) *Enemy air defenses*. When enemy air defense capabilities preclude using air ambulances in forward areas, they should be used to evacuate patients from AXPs or from division clearing stations.

(*h*) *Ambulatory patients*. Some ambulatory patients may be reported as litter patients in mountainous terrain. These patients may be unable to move unassisted over the rugged terrain. Once placed on the air ambulance, their status may be upgraded.

(*i*) *Crew training*. Ground and air evacuation crews should receive additional training and orientation in mountaineering skills, handling patients, and survival skills; for example—

- Cold weather survival training, including cold injury prevention.
- Mountain (rock) climbing.
- Use of ropes and vertical rescue techniques (paragraphs 9-12 through 9-13).
- Individual and unit movement at high altitudes.
- Care and treatment of patients suffering high altitude illnesses and cold weather injuries.
- Techniques of patient evacuation by litter, emphasizing the use of pack animals (if available from the host country), and the improvised travois (paragraph 9-7) litter.

(*j*) *Patient loading*. Care must be taken when loading patients where there is a great deal of slope to the LZ. Emphasis on approaching and loading the aircraft from the down-slope side of the aircraft must be reinforced.

CAUTION

Approaching the aircraft from the up-slope side is hazardous.

e. Troops operating in mountainous areas are exposed to other injuries and illnesses that frequently occur in this environment. These conditions include—

- An increased rate of fracture, sprain, and dislocation injuries.
- Incidents of acute mountain sickness, high-altitude pulmonary edema, and cerebral edema caused by rapid ascent to heights over 7,500 feet.
- Cold weather injuries.
- Dehydration and heat exhaustion.
- Sunburns and snow blindness.
- Aggravated sickle cell anemia. Although this condition is not considered a mountain illness, personnel with the sickle cell trait can be seriously affected by the decrease in barometric pressure and lower oxygen levels found at higher altitudes.

f. The proportion of litter cases to ambulatory cases is increased in mountainous terrain, for even the slightly wounded may be unable to move unassisted over rough terrain. Litter relay stations may be required along the evacuation route to conserve the energy of litter bearers and to speed evacuation.

g. It is important to be able to predict the number of patients that can be evacuated with available personnel. When the average terrain grade exceeds 20 degrees, the four-man litter team is no longer efficient and should be replaced by a six-man team. The average mountain litter team should be capable of climbing 120 to 150 vertical meters of average mountain terrain and return with a patient in approximately 1 hour.

h. Mountain operations may require medical personnel to carry additional equipment. Items such as ropes, pulleys, pitons, piton hammers, and snap links are all necessary for evacuating patients and establishing BASs. All unnecessary items of equipment including those for which substitutes or improvisations can be made should be left behind. Heavy tentage, bulky chests, extra splint sets, excess litters, and nice-to-have medical supplies should be stored. Such medical supplies, if stored, should be

readily available for airdrop or other means of transport. Medical items that are subject to freezing should be safeguarded; they should not be exposed to the low temperatures experienced in mountainous areas.

i. Evacuation times may be extended when using litter teams with AXPs. Therefore, shelter for patients must be improvised if tentage is not available to prevent undue exposure. In the summer or in warm climates, improvisation may not be necessary; however, since there is a close relationship between extreme cold and shock, medical personnel must be conscious of the need to provide adequate shelter for patients. Satisfactory shelter may be found in caves, under overhanging cliffs, behind clumps of thick bushes, and in ruins. Shelters may be built using a few saplings, evergreen boughs, shelter halves, or similar items. The time a patient is to be held influences the type of shelter used. When patients are to be kept overnight, a weatherproofed shelter should be constructed.

j. For further information on mountain operations, refer to FM 90-6 and Training Circular (TC) 90-6-1. For aviation-specific information, refer to FMs 1-202 and 1-400.

5-3. Jungle Operations

a. Combat health support elements in a jungle environment retain the same basic capabilities as in other environments. Jungle operations, however, subject personnel and equipment to effects not found in other environments. The jungle environment degrades the ability to maneuver. Security problems are also increased and affect medical evacuation operations as much as they do the combat forces.

b. In jungle operations a combination of air and ground evacuation units are used to maximize the patient evacuation potential. Using this dual system of evacuation ensures that the inherent limitations of one system can be compensated for by the other. Jungle variations affect the organizing, positioning, and securing of CHS. Due to the terrain, aerial resupply is usually a common practice. The responsiveness provided by aerial resupply requires fewer supplies to be stockpiled in the combat trains.

c. Jungle combat operations are characterized by ambushes and other guerrilla-type operations. The security threat caused by infiltrators requires that LOCs be patrolled often and that convoys be escorted. It is, therefore, essential that CHS be performed as far forward as the tactical situation permits. Positioning assets forward—

- Improves response time.
- Reduces road movement.
- Allows the CHS elements to take advantage of the security offered by combat units.

d. The thick foliage often makes evacuation by ground more difficult than in other types of terrain. Factors such as the threat, limited road network, and reliance on nonmedical personnel for convoy security make air evacuation the preferred means. By using the ambulance shuttle system, patients can be transferred from forward operating ground ambulances to either ground or air ambulances operating further to the rear. In situations where evacuation assets are delayed by various factors (weather or terrain),

patients are held for longer periods of time at forward locations. This will dictate the need for additional medical supplies. Combat health support planners must try to anticipate these delays whenever possible. The increased disease and infection incidences associated with the jungle environment may worsen the patient's condition; therefore, timely evacuation is essential.

e. In some remote and densely foliaged jungles, the only means of evacuation may be by litter. Ambulances may not be practical on trails, unimproved muddy roads, or in swamps. As in mountain operations, there is a higher proportion of litter cases than usual. In the jungle even a slightly wounded soldier may find it impossible to walk through dense undergrowth. At best, litter teams can carry patients only a few hundred meters over rough jungle terrain before needing rest or relief. Litter carries should be kept as short as possible and medical elements pre-positioned and retained forward.

f. Other special planning considerations in jungle operations include—

(1) *Water*. Water is vital in the jungle and is plentiful. Water from natural sources, however, should be considered contaminated. *Water purification procedures must be taught to all soldiers*. (Refer to FMs 21-10 and 21-10-1 for additional information.)

(2) *Clothing*. Due to the tropical climate, units should pack hot weather clothing when deploying to jungle areas. Jungle fatigues and boots are recommended. Insect (mosquito) nets, insect repellent, and sunscreen should be issued to all soldiers operating in this environment.

(3) *Disease and nonbattle injuries*. The jungle environment is ideal for the transmission of a large number of diseases. The rate of DNBI casualties is potentially the highest in this climate. The heat, humidity, and terrain places the troops at high risk for dehydration, heat injury, skin diseases, endemic diseases, and immersion foot. Small wounds can rapidly become infected and lead to loss of effectiveness and possibly require evacuation. High standards of personal hygiene must be taught, encouraged, and maintained by the command. Mosquitoes and other arthropods that carry disease flourish under jungle conditions. Use of all possible personal protective measures must be ensured. Food- and waterborne diseases leading to diarrhea or other symptoms will abound. Food service sanitation measures must be strictly followed. The potential for contamination of food and water increases with each time they are handled, stored, or transported. Soldiers must be encouraged to consume adequate amounts of water that has been purified and to eat only approved foods. In the jungle it is necessary for the commander to pay meticulous attention to the details of PVNTMED measures to maintain an effective fighting force. For additional information on PVNTMED measures, refer to FM 21-10 and FM 21-10-1.

(4) *Training*. Combat health support personnel should be trained in survival and support techniques in jungle environments. For example, training should be conducted in—

- Hot weather acclimatization and survival.
- Prevention, early detection, and treatment of arthropod-, food-, and waterborne diseases.
- Land navigation in a jungle environment.

- Field sanitation and other PVNTMED measures.
- Care and maintenance of equipment and supplies.

(5) *Equipment*. Due to the increased heat and humidity, vehicles and equipment require additional maintenance. Equipment tends to rust quickly and must be cleaned and oiled more frequently. Canvas items rot and rubber deteriorates much faster than in more temperate climates.

(6) *Communications*. The range of FM communications in the jungle is significantly reduced due to the dense undergrowth, heavy rains, and hilly terrain. The range of a radio set operated in the jungle may be reduced by 10 to 25 percent. The heavy rain and high humidity of the tropics also reduce the range (about 20 percent) and reliability of wire communications. The transmission range can be extended by using additional radio relays and field expedient antennas.

(7) *Aircraft performance*. Utility helicopters are not able to lift the same size loads that can be lifted in more temperate areas. This results in a reduced patient load in some evacuation aircraft. Again, frequent and accurate performance planning is essential for mission accomplishment.

(8) *Landing zones*. There may be few suitable LZs. Many LZs will only be large enough to support one or two helicopters at a time.

(9) *Hoist operations*. Hoist operations may be required more frequently in the thick jungle vegetation where LZs are not available. The forest penetrator should be carried on all operations.

g. For aviation-specific information, refer to FMs 1-202 and 1-400.

5-4. Desert Operations

a. *The Environment*.

(1) Deserts are arid, barren regions of the earth incapable of supporting normal life due to a lack of fresh water. Although deserts are often thought of as hot climates, it is important to note that temperatures range from over 136 degrees Fahrenheit (F) in some deserts, to bitter cold in others. Day to night fluctuations in temperature can exceed 70° F. Desert terrain can have mountains, rocky plateaus, or sandy dunes; some desert areas may contain all of these characteristics. Rain, when it falls, often causes flooding in low-lying areas. Winds can have a devastating effect upon CHS operations by destroying equipment and supplies and causing dust storms. Dust storms make navigation and patient treatment difficult. Since deserts vary considerably in the type of terrain and temperature, and in their cultural makeup, current medical intelligence should be obtained prior to deployment on operations conducted on desert terrain.

(2) People have lived and fought in desert areas for thousands of years. However, the environmental effects on personnel can be extreme, especially for soldiers not prepared for these operations.

- *Acclimatization*. To be effective, soldiers must be properly acclimatized to the desert. Two weeks are usually required to satisfactorily acclimatize troops to hot environments, using progressive degrees of heat exposure and physical exertion. Other potential acclimatization problems that may be encountered are the effects of dry air and altitude on the respiratory system. Since many desert areas are located in mountainous terrain, soldiers must be acclimatized for both the altitude and the temperature. In some areas of the world, such as the Gobi Desert in East Asia, people must be acclimatized to the cold, in addition to the dryness. (For additional information, refer to FM 21-10, FM 8-250, and TB MED 507.)

- *Discipline*. Units deployed in desert areas typically have long LOCs and are widely dispersed. As unit elements become more dispersed, commanders must rely more heavily on junior officers to ensure that C2 is maintained and that discipline and PVNTMED programs are enforced. For a unit to be effective, a high level of discipline must exist at all levels of the organization.

- *Water*. Water is the most basic need in a desert. Without it, soldiers cannot function effectively for more than a few hours.

  - Thirst is not an adequate indicator of the need for water. *It is necessary for each commander to establish and enforce a supervised drinking program.* Experience has shown many times that soldiers do not drink enough fluids unless forced to do so. It is important to cool the water, if at all possible, to make it more appealing. Water supplies should be carefully guarded against accidental loss, sabotage, or contamination.

  - Extra water must be carried by CHS vehicles for patients to drink and to cool heat casualties.

- *Endemic disease and environmental injuries*. Soldiers deployed in the desert are susceptible to endemic diseases and environmental injuries.

  - Proper water discipline, vaccines, prophylactic measures, field sanitation measures, personal hygiene, and other PVNTMED measures can reduce these risks.

  - Cold weather injuries, heat injuries, and respiratory disease can also be prevalent. Proper clothing, equipment, and a water discipline program must have command emphasis in desert operations.

- *Winds*. Winds may very easily damage materiel such as aircraft, antennas, and tents. Equipment is protected by using covers, tie-downs, and shelters. Terrain helps shield equipment from the wind if site selection is done carefully. In some cases, special tools, such as extra long metal tent stakes, are necessary.

- *Wind and sand*. The effects of wind and sand are interrelated. Desert sand starts to become airborne when the wind reaches about 20 knots. Sandstorms—

  - Restrict visibility.

- Pose a hazard to eyes (especially for soldiers wearing contact lenses).
- Can contaminate water supplies (if they are not protected).
- Make navigation difficult.

- *Sun*. The sun may cause sunburn of the skin and eyes (if protection is not used).

(3) Eight characteristics of the desert environment that may adversely effect equipment are—

- *Terrain*. Trafficability varies with the type of terrain covered. Open, flat, and rocky terrain affords higher trafficability than do mountainous areas, lava beds, or salt marshes. Drivers must be well trained in judging the terrain over which they are driving to select the best alternative routes.

- Tracked vehicles are best suited for desert operations. However, they can throw tracks when traversing a rocky area. Their use is also limited in rough terrain with steep slopes.

- Wheeled vehicles may be used in desert operations; however, they normally have a lower average speed than tracked vehicles and a higher incidence of damage and malfunction. Wheeled vehicles often bog down in sandy areas and cannot traverse many of the rougher areas.

- In planning for desert operations, vehicles should carry extra repair parts (fan belts, tires, and other items apt to malfunction).

- *Heat*.

- Excessive heat causes vehicles to overheat, leading to greater than normal wear. The frequency of leaks on vehicles and aircraft is greater than in some other environments. Engine and transmission seals tend to dry out and crack; fuel lines wear out quickly; and water requirements for cooling vehicle engines are greater. Loss of water, through evaporation, must be included in logistical planning. Aircraft temperature limitations may be reached quickly, resulting in limited use during the hotter parts of the day. Aircraft performance is greatly reduced by the heat when combined with the effects of ground elevation. This may result in the limited use of some LZs, reduced patient carrying capacity, and reduced fuel load. There may not be sufficient out-of-ground-effect hover power available for landing in confined areas or on pinnacles, for using the hoist, or for nap-of-the-earth (NOE) flights. Using vehicle and aircraft covers reduce the effects of heat while vehicles and aircraft are not in use.

- Batteries do not hold their charge efficiently in intense heat. Dry battery supplies should be increased to compensate for a higher usage rate.

- Communications equipment must be protected from the heat in the desert. Dust covers are used on this type of equipment. If the equipment has ventilating ports, these should be cleaned regularly to avoid clogging.

- Medical supplies must be protected from the heat to prevent deterioration. The shelf life of some medical supplies decreases when stored in hot climates.

- Medical equipment must be protected from the effects of heat. It may be protected using the same techniques as those used to protect communications equipment.

- *Radiant light*.

- The sun burns unprotected skin and it may damage unprotected eyes. Soldiers should dress in loosely fitting clothing, use sunburn cream or oils to protect exposed skin, and wear sunglasses or goggles to protect their eyes. Soldiers should remain fully clothed. Removing clothing increases direct exposure of the skin to the sun and eliminates the beneficial cooling effects of the moisture trapped in clothing.

- Radiant light or its heat effects may be detrimental to plastics, lubricants, pressurized gasses, rubber, and other fluids. All vehicles and aircraft should be kept well ventilated, and windshields should be covered to reduce heat buildup inside. Supplies of all types should be stored in a well ventilated, shady area. Placing supplies in covered holes in the ground may reduce adverse heat effects.

- *Dust and sand*.

- Dust and sand present one of the greatest dangers to the proper functioning of equipment. Sand mixed with lubricants forms an abrasive paste. Lubrication fittings, bearings, and filters should be inspected frequently and changed when required.

- Aircraft should not be exposed to dust and sand any more than is absolutely necessary. Ground handling instead of hovering reduces sand ingestion. Dust and sand increase failure of microphone switches, signal distribution panels, and circuit breakers, and cause electrical motors and generators to burn out. Wheel and flight control bearings require more frequent cleaning; engines should be flushed frequently.

- Medical and communications equipment may be adversely affected by dust and sand. Over a period of time, electrical insulation is damaged by windblown sand. When combined with the effects of lubricants on the insulation, dust and sand can become a major communications problem. Special care should be taken to brush dust off radio equipment and to keep ventilating ports and channels clear.

- Sand can accumulate in airframes, on the bottom of armored vehicles, and in bearings on all types of equipment. This accumulation, combined with oil and condensation, adds extra weight to aircraft and vehicles as well as jamming their control linkages. Sand and grease buildups must be removed from bearings to ensure safe operation and control of aircraft and vehicles.

- Dust trails created by hovering aircraft or ground vehicles can be seen in excess of 10 miles on a relatively flat desert. This exposes these assets to direct and indirect enemy fires. Ground vehicles should reduce their speed to the point that they do not create a dust signature.

- *Humidity*. Humidity is a factor in some desert areas of the world, especially in the Middle East. Humidity can become a problem for short periods of time in other desert areas. Light coats of lubrication can help prevent rust; however, these benefits should be weighed against the dust-gathering qualities of oil. Demisting equipment is used on optics and night vision equipment to combat the effects of humidity.

- *Temperature variation*. Temperature variation can cause condensation in humid desert areas affecting optics, fuel lines, air tanks, and weapons. Expansion and contraction of air and fluids cause tires to overinflate during the day and underinflate at night. Fuel tanks may overflow during the day causing a fire hazard. Oil fluid levels become overfull and cause leaks during the day, or insufficient lubrication occurs when the oil cools. Vehicle operators and crew chiefs must ensure that the effects of temperature variations do not become a significant problem.

- *Static electricity*. Static electricity is prevalent in the desert. This is important to remember during refueling operations and when oxygen is being used on board vehicles or aircraft. Proper refueling procedures must be followed. Static electricity also causes severe shock to ground personnel in sling load and hoist operations.

NOTE

The load must touch the ground before the ground crew can handle it.

b. Preparation for Desert Operations.

(1) To ensure success in desert operations, detailed planning is required. Factors to consider include—

- *Water*. Additional quantities of water are required for CHS operations for the survival of both medical personnel and their patients. Load plans for all vehicles and aircraft must include water. *Water is as mission essential as any piece of unit equipment*. It should be a priority item when loading plans are developed.

- *Prescribed load lists*. These lists are expanded to carry sufficient quantities of repair parts easily degraded by the environmental factors. For example, rubber and plastic fittings and tubes, or spare parts for communications equipment.

- *Wind, sand, and sun*. Plan for the effects of wind, sand, and sun. All plastic and glass surfaces on vehicles, aircraft, and other equipment should be covered when not in use. Covers should be ordered or made prior to deployment.

- *Fuel*. Fuel planning is critical due to power limitations, extended range requirements, and increased vulnerability of refueling sites in the relatively open desert terrain. Careful planning of FARPs is essential for mission accomplishment.

- *Clothing*. Units should plan to pack both hot and cold weather clothing when deploying.

- *Petroleum, oils, and lubricants*. Petroleum, oils, and lubricants (POL) products should be of the proper viscosity for desert operations. Maintenance services are also performed more frequently on ground vehicles and aircraft, thus requiring a larger amount of POL than normal.

- *Filters*. Extra filters of all types are planned for due to a higher consumption rate.

(2) Training for desert operations is not significantly different than training for operations in other areas except for the following:

- *Mountain training*. Because many desert areas are in mountainous terrain and because high temperatures increase density altitude, aeromedical evacuation units should conduct mountain training to prepare for contingencies in desert areas. Further, procedures and techniques for evacuation in mountainous terrain must be practiced by all CHS personnel. Special equipment requirements (paragraph 5-2*h*) must also be considered.

- *Navigation*. Navigation in desert terrain varies from simple to extremely difficult. Factors affecting navigation are the type of desert and the scale and quality of the available navigational charts. At times, aircraft may have to use dead-reckoning navigational techniques (time, distance, and heading). Ground vehicles must have compasses available, as they have to rely on compass headings and odometer readings to navigate. Ground and air ambulance crews should be able to interpret navigational charts and maps of all types and scales. Use of convoys is a viable technique to improve security and to ensure that ground vehicles do not get lost. Aircraft may be used to assist in navigation by convoys in those areas in which there are poor road networks and the terrain offers no distinctive features by which to navigate.

c. *Medical Evacuation Operations in the Desert*. In principle, medical evacuation operations in the desert do not differ greatly from these operations in other environments. However, techniques exist which may increase the effective use of medical resources.

(1) Helicopter landing sites should be chosen with care. Common mistakes made by many units when establishing the LZ are—

- Locating the pad relative to the patient and tents, vehicles, and other obstacles. A common tendency is to locate the helipad downwind of MTFs so that approaches may be made into the wind towards the facility. In high winds, the helicopter must make its take-off over the facility or go around it. This not only endangers personnel on the ground, but also the crew of the aircraft. It forces the pilot to take off with a strong crosswind or tailwind if he does not have the power to clear the obstacles in front of him. At times, crosswind take-offs are not possible because of higher terrain on either side of the landing area. In mountainous deserts, winds normally channel down the valleys and are more predictable along valley floors. A better site selection for a LZ is with the MTF along side the approach and take off zone. Thus, the landing direction is up or down the valley, depending on the airflow, and the MTF is not overflown.

- Situating landing sites in washes, small confined areas between large rocks, or close to moving tracked vehicles. Map coordinates are rarely accurate unless the site is beside a major terrain feature. Therefore, LZs should be located next to major terrain features or on higher ground where they can be seen from the air at a distance of 2 to 3 kilometers, if possible. Lack of distinctive features in the open desert and on large-scale maps makes pinpoint navigation difficult, especially at night.

- Marking of helicopter LZs is done so that the pad can be seen from the air, but the markings should not be a hazard in themselves. If engineer tape is used, it should be firmly secured to prevent it from blowing loose. Panel markers are not a good tool to use as they are difficult to see. If panel markers are used, they need to be secured. If used, flares or marker smoke should not be deployed on or directly upwind from the pad. Smoke grenades or flares should not be thrown under the aircraft as it lands. Avoid using white smoke to mark the LZ. Colored smoke is probably the best daylight marking method. It is difficult to detect a smoke grenade more than 2 to 3 kilometers away, but an aircraft in the general vicinity can normally see it. Radios are used to guide aircraft to the LZs, but this creates an electronic signature. Units requesting medical evacuation must be prepared to signal the evacuation aircraft upon its arrival. Normally, map coordinates will guide the aircraft to within 2 to 3 kilometers of the LZ. Even from NOE altitudes, the aircrew may be able to see several units in the area. The requesting unit must signal the aircraft to ensure the designated LZ is used.

(2) Considerations for night flight include the following:

(*a*) Moonlight aids the medical evacuation pilot by providing him with the light to see with either unaided vision or night vision goggles (NVG). When adequate ambient light exists, medical evacuation crews function almost as effectively at night as they do during daylight. The small arms threat is somewhat reduced at night, although it still exists from radar-guided weapons, infrared-sited weapons, and passive night vision device-equipped weapons systems. Flying into a bright moon with NVG on can be compared to flying into the sun during the day. The goggles darken and visibility becomes extremely poor. Flight routes should not be planned to fly directly into a bright moon if NVG are to be used.

(*b*) The lack of visual cues over sand is similar to that over water. It is very easy for pilots to become disoriented and fly into the ground. Reliance on radar altimeters is a must over flat sandy areas of the desert.

(*c*) Frequently, desert areas do not have sufficient ambient light to allow adequate night vision, even with the aid of NVG. A pilot wearing NVG is often unable to see the ground at an altitude of 100 feet using a landing light equipped with a pink light filter. Under these conditions, dead reckoning is the only effective navigation method unless Doppler equipment or NAVAIDS are available. Unfiltered light can be used with or without NVG; however, this increases the risk of exposing the aircraft's position to the enemy.

(3) Desert warfare is usually characterized by extended battle zones which increase evacuation distance and time. Combat health support units are located further to the rear in the desert. Establishing an ambulance shuttle system or PCPs is useful. Combat health support units require a greater number of vehicles for operating in deserts than in other environments. Air evacuation by fixed- and rotary-wing aircraft is the preferred method due to their speed and range. Further, using aircraft reduces

the load on ground vehicles. Augmentation from higher echelon CHS may also be required to meet the extended evacuation needs.

(4) Smoke is used extensively on the modern battlefield by both sides. It can be effectively used to mask friendly actions to include medical evacuation. (Refer to Appendix F for further information.)

- Smoke can be a major hazard, especially to medical evacuation helicopters. Smoke reduces visibility and forces an aircraft higher where it can be acquired by threat weapons systems. The phenomenon of inversion occurs often in the desert. When this happens, medical evacuation vehicles and aircraft may be able to work underneath the smoke using the smoke layer for overhead concealment.

- Medical units must coordinate closely with supported organizations on smoke operations. Smoke can either help or hinder the evacuation mission, depending upon how it is used.

(5) Communications in the desert are affected by a number of factors. Atmospheric interference and the skip of signals occur frequently. Mineral deposits in the desert may unexpectedly disrupt communications. Many of these problems can be overcome by using additional radio relays, preestablished control measures, and visual signals.

(6) Artificial lights may be used at times in the desert. They are very easily detected. Even with blackout lights, vehicles using lights can be detected for miles with NVG. Serious consideration should be given to driving without using lights when the tactical situation dictates. Ground guides are used to help vehicles navigate through areas that are not clearly marked or through area where troops are present.

(7) Wind is one of the most significant environmental factors affecting medical evacuation in the desert. Wind can be destructive to both structures and equipment; tents, antennas, and aircraft can be easily damaged. Wind direction and speed vary greatly within the space of a few miles. Velocity is substantially increased when wind channels between hills and direction changes due to interference of terrain features. The wind frequently makes aeromedical evacuation impossible by exceeding the operating limitations of the aircraft. At other times, it may limit the use of some potential LZs. Blowing sand and dust can slow down the evacuation system by making navigation by either ground or air ambulance difficult, if not impossible. High winds are predictable to a certain extent. For example, at certain times of the year in the Mojave Desert high winds occur every day at dusk and last for 3 to 4 hours. At other times, high winds, based on frontal weather patterns, can remain for several days at a time. These factors should be considered by CHS planners, and medical evacuation assets should be massed or relocated accordingly.

(8) The desert provides little or no protection from enemy air defenses except in mountainous terrain. Aircraft may have to be flown above NOE altitudes to prevent a dust signature. These factors cause increased exposure and vulnerability of air ambulances to enemy air defenses and may limit their employment.

d. Further Information. Refer to FM 90-3 for additional information on desert operations. For aviation-specific information, refer to FMs 1-202 and 1-400.

5-5. Extreme Cold Weather Operations

a. Operations in the extreme cold have many of the limiting factors found in desert operations. The tundra and glacial areas are harsh, arid, and barren. Temperatures may reach lows of -80° F to -100° F which, combined with gale force winds, make exposure unsurvivable.

b. The greatest environmental detriment to operations is blowing snow. This results in a loss of depth perception from total white conditions. Blowing snow is caused by the wind or by the rotorwash of helicopters; its effect reduces visibility to zero.

c. Other environmental considerations are as extreme but easier to circumvent. Solid footing is suspect in both the dead of winter and in the summer. Snow and ice cover crevasses, holes, and otherwise unstable ground. In traversing suspect ground situations, consider linking soldiers by rope. During the summer, ground transportation is more restricted than in any other environment due to the marsh and muskeg composition of the arctic tundra. Patients must be sustained for a longer duration due to terrain delays and the lack of direct lines of evacuation.

d. Greater responsibility has to be placed on each soldier, especially for maintenance of nutrition and water consumption. It is imperative to stress that leadership and training are important in the prevention of cold weather injury. Strict adherence to the guidelines found in FMs 21-10 and 31-70 assures an effective fighting force. Water conservation is essential; however, adequate consumption by the individual should be enforced.

e. Factors to consider for conducting evacuation in arctic operations include the following:

- Arctic warfare is usually characterized by extended battle zones that increase evacuation distance and time. Establishing an ambulance shuttle system or PCPs is useful. Augmentation from higher echelon CHS may also be required to meet the extended evacuation needs.

- Additional supplies of water should be carried by ambulances and maintained at PCPs, if possible.

- Due to the decreased temperature and frozen environment, ambulance maintenance requirements are increased. Lubricants must be of the correct viscosity for the temperature. In extreme cold, batteries perform less efficiently. Consult the specific aircraft maintenance manual for the recommended battery and procedures for extreme cold weather operations.

NOTE

All ambulances are considered deadlined without a functional heater for the patient compartment.

- The proper storage of medical supplies is essential to prevent loss from freezing.

- There are few terrain features or road networks; therefore, evacuation routes must be surveyed and marked over open terrain. At extreme latitudes, operations during the winter months are conducted in extended hours of darkness. The use of NVG may be required. Compass accuracy is inconsistent due to a geomagnetic phenomenon. Beacons and homing devices are essential for air navigation.

- Weather is extremely unpredictable. There are too few observers to allow for accurate assessment of weather patterns. Unfavorable weather conditions cause unexpected delays; therefore, medical personnel must be prepared to provide survival measures for their patients and themselves.

- Landing zones must be chosen with extreme care in both winter and summer. Blowing snow mandates instrument-assisted takeoffs and running landings. Landing areas must be correspondingly larger. The full weight of the aircraft cannot be allowed to settle on the skis until after firm ground conditions are established. Movement of patients to and from the aircraft is difficult. Where an aircraft lands is where it stays. A rocking motion, to free the skis prior to lift off, is performed using the cyclic and antitorque controls.

f. Thorough planning and strict preparation are the keys to survival. Factors to consider include the following:

- Mud obstacles at noon may become an avenue of approach at midnight.

- Snow complicates all work. Snow-covered terrain hampers reinforcements, muffles noise, makes cross-country driving hazardous, and creates different camouflage requirements.

- Because of thermal sights, a complete reappraisal of concealment is required.

- Tracks in the snow destroy concealment.

- No soldier is assigned to any job alone. The buddy system is used at all times.

- Anticipate that all maintenance tasks will take twice as long.

- Bare metal can stick to skin or wet garments in subfreezing temperatures.

- Fuel spilled on skin or garments increases the freezing factor; it is one of the greatest causes of injury in winter operations.

- When operating in the cold, anticipate increased POL needs. Fuel consumption can rise as much as 25 percent for vehicles operating in deep snow, slush, or mud.

- The recommended fuel for Yukon stoves is diesel.

- Make every effort to warm gearboxes and engines before starting.

- A higher paraffin content is contained in jet petroleum (JP)-5 fuel. At extremely cold temperatures, the aircraft fuel controls are likely not to work even with preheating.

- The first consideration in the AO is heat; followed by shelter for sustained work.

- Soldiers need to stand clear of taut cables; steel tends to be brittle and breaks in extremely cold temperature.

- Fire extinguishers are winterized by adding 15 percent nitrogen to the carbon dioxide.

- Degradation of battery life requires changes as much as six times more frequently than in a more temperate environment.

- Radio sets are warmed up prior to transmission. The sets may be turned on but should not transmit for at least one-half hour.

NOTE

Single-channel ground and airborne radio system (SINCGARS) radios do not require a warm up period.

- Frost shields (such as using the plastic bag in which the batteries are packed) should be placed over microphones.

- Grounding rods have to be buried horizontally instead of pounded in vertically. Recovery of stakes and rods placed in the ground is significantly more difficult.

- Flooring is needed in heated areas because of the thawing of the tundra.

- Soldiers must take breaks for water and warmth.

- Static electricity presents a serious safety hazard especially around flammable materials.

g. For additional information, refer to FM 31-70. For aviation-specific information, refer to FMs 1-202 and 1-400.

5-6. Medical Evacuation in a Nuclear, Biological, or Chemical Environment

a. Medical evacuation and treatment operations are conducted continuously throughout operations conducted in an NBC environment. The CHS commander must have a comprehensive plan which is rehearsed on a periodic basis to ensure the timely evacuation and treatment of casualties in an NBC environment. Techniques and procedures which are essential for operating in a contaminated environment should be contained in the unit TSOP. The number of casualties and their medical condition, type of contaminant, the size of the land area contaminated, the expected duration of operation, risk assessment and acceptable level of risk, and the number of CHS assets (medical personnel, medical units, and evacuation

vehicles and aircraft) initially contaminated will determine the quantity and type of uncontaminated CHS resources, if any, which will be introduced into the contaminated environment to ensure timely medical treatment and evacuation occur.

b. Evacuation of patients in an NBC environment forces the commander to consider to what extent he will commit evacuation assets to actually enter the contaminated area. Since the combinations of evacuation methods are nearly endless, the commander has greater flexibility in tailoring an evacuation system to meet his particular tactical situation and to deal with the NBC environment.

c. On the modern battlefield there are three basic modes of evacuating patients (personnel, ground vehicles, and aircraft).

(1) In using personnel to physically carry the casualties, the commander must realize the inherent stress involved. Cumbersome mission-oriented protective posture (MOPP) gear needed in a contaminated environment (added to climate, increased workloads, and the fatigue of battle) greatly reduces the effectiveness of unit personnel.

(2) If the commander must send evacuation personnel into a radiologically contaminated area, he must establish operational exposure guidance (OEG) for the medical evacuation operation. Radiation exposure records are maintained by the unit NBC NCO and are made available to the commander, staff, and surgeon. Based on OEG, the commander decides which medical evacuation assets to send into the contaminated environment.

d. Commanders should make every effort to limit the number of evacuation assets which are contaminated while still maintaining a timely and effective medical treatment and evacuation operation.

(1) It is expected that a certain number of both ground and air ambulances will become contaminated in the course of battle. The commander can, therefore, segregate the contaminated ones. This results in the smallest impact on his available assets and the greatest possibility for continuing the patient evacuation mission. *Optimize the use of resources, medical or nonmedical, which are already contaminated before employing uncontaminated resources*.

(2) Once a vehicle or aircraft has entered a contaminated area, it is highly unlikely that it will be able to be spared long enough to undergo a complete decontamination. This depends upon the contaminant, the tempo of the battle, and the resources available. Normally, contaminated vehicles (air and ground) have restricted use and are confined to dirty environments.

(3) Introducing uncontaminated aircraft into a contaminated area should be avoided, whenever possible. Ground ambulances should be used instead of air ambulances as long as their use does not adversely affect the patient's medical condition. Ground ambulances are more plentiful and are easier to decontaminate. This does not, however, preclude using aircraft in a contaminated environment or in the evacuation of contaminated patients.

(4) The relative positions of the contaminated area, FLOT, and threat air defense systems determine if and where helicopters are to be used. The commander may choose to restrict one or more

helicopters to the contaminated areas and use ground vehicles to cross the line separating contaminated and clean areas. The ground ambulance can proceed to the receiving MTF with a patient decontamination station. The patient can then be transferred to a clean ground or air ambulance if further evacuation is required. The routes used by ground vehicles to cross between contaminated and clean areas are considered dirty routes and should not be crossed by clean vehicles. The effects of wind and time upon the contaminants must also be considered.

(5) The rotorwash of the helicopters must always be kept in mind when evacuating contaminated casualties. The intense winds disturb the contaminants in the area and further aggravate the condition by additionally spreading the contaminants. Ideally, the aircraft must be allowed to land and reduce to a flat pitch prior to bringing any patients near. This will be dictated by the tactical situation, but allows some reduction in the effects of the downwash. A helicopter must not land too close to a decontamination station (especially upwind) because any trace of contaminants in the rotorwash will compromise the decontamination procedure.

e. Immediate decontamination of aircraft and ground vehicles should be accomplished to minimize crew exposure. Units should develop their own procedures for thorough decontamination and document them in their TSOPs. A sample aircraft decontamination station that may be tailored to a particular unit's needs is provided in FM 3-5.

f. Evacuation of patients must continue even in a contaminated environment. The commander must recognize the constraints placed upon him by resources and plan and train to overcome deficiencies.

g. Refer to FM 8-10-7 for additional information on CHS operations in an NBC environment.

5-7. Naval Operations

a. It is imperative that Army aeromedical evacuation units be able to interface on the first day of battle with US Navy (USN) air-capable ships. Lessons learned from past operations, such as Vietnam and Grenada, have shown that US Army helicopters should be able to operate to and from USN air-capable ships. An interservice agreement between the Army and the Navy allows for deck-landing qualification of Army pilots. (Refer to FM 1-564 for additional information.)

(1) It is important that units having contingency missions requiring Navy support establish training requirements to obtain naval-operations orientation, water egress training, water survival, and deck-landing qualification. This enhances the successful accomplishment of the aeromedical evacuation mission to naval vessels.

(2) In past joint operations, communications have been burdensome for both Army and Navy elements. Commonality of communication requirements should be established during training exercises. Communication equipment and frequencies for medical evacuation to Navy vessels must be established. This will provide smooth integration of Army helicopters into the Navy airspace management system during actual operations.

(3) As the Navy vessels may operate relatively long distances from the ground combat operations, Army aeromedical evacuation units need to be proficient in over-water navigation. The use of NAVAIDS from the Navy element in support of the operation is the first priority for over-water navigation. Basic dead-reckoning remains a secondary measure.

b. An important aspect of joint operations is the medical capabilities of Navy vessels servicing the CZ. Knowledge of ship's medical capabilities assists the MRO to direct patients to proper treatment sites. There are many classes of ships which can meet the medical needs of ground forces. Destroyer tenders and aircraft carriers have helicopter landing areas, one operating room and, at a minimum, one medical officer. Amphibious ships have the most extensive medical facilities of any Navy combat ship. The Navy has fifty-nine amphibious ships in active commission plus two tank landing ships (LST), which are operated by the Navy Reserve Force. The primary mission of the amphibious ships is to transport and support the Fleet Marine Force. The ships have the additional duty of casualty receiving and treatment ships (CRTS). During normal operations, the medical staff is kept to a minimum. The medical staff is augmented when expanded capabilities are needed. Current information regarding landing requirements and medical capabilities should be obtained during training periods with the Navy. Casualty care is secondary to the combat mission of all US combat ships.

(1) Amphibious assault ships "WASP" class are designated by the Navy as LHD (followed by a number) and have the largest patient care facilities on any US combat ship. The WASP class ships have six main operating rooms, four dental operating rooms, bed capacity that can be expanded to 600, and it carries 1,500 pints of frozen blood. This ship can receive casualties from helicopters or landing craft.

(2) Amphibious assault ships "TARAWA" class are designated by the Navy as LHA (followed by a number). The TARAWA class ships have three main operating rooms, two dental operating rooms, an overflow bed capacity of 300, and carries 1,500 pints of frozen blood. The ship can receive casualties from helicopters or landing craft.

(3) Amphibious assault ships "IWO JIMA" class are designated by the Navy as LPH (followed by a number). These ships were specifically designed to operate helicopters. The IWO JIMA class ships have two operating rooms and an overflow bed capacity of 200.

(4) The amphibious transport dock is designated LPD (followed by a number) and has less medical capabilities than the LHD, LHA, or LPH ships. It can be designated as secondary casualty receiving ship.

(5) The older dock landing ship is designated LSD (followed by a number). It can be used as a secondary CRTS when augmented. The newer class of LSD currently under construction can be used as a casualty receiving ship with a capacity for 50 wounded.

(6) The tank landing ship is designated LST (followed by a number). It is another type of ship used in amphibious operations. It is designed with a helicopter platform and a stern ramp. Patients can be delivered by air or boat when required by tactical or mass casualty situations. When the LST is augmented with medical personnel and materiel, it can be used for the emergency treatment and evacuation of patients.

(7) The troop transport, designated AP (followed by a number), is not in active service. When available, the troop transport can be outfitted with special medical facilities and carry sick, injured, and wounded personnel.

c. The Military Sealift Command operates two hospital ships. The United States Navy Ship (USNS) *MERCY* T-AH 19 and the USNS *COMFORT* T-AH 20. One ship is based on each coast and, when needed, will be assigned medical staffs from military hospitals, getting underway within 5 days. The hospital ships MTFs were designed for a total capacity of 1,000 casualties, including 500 acute care beds and 500 recuperation beds. The hospital ships have 50 trauma stations in the casualty receiving area; 12 operating rooms; a 20-bed recovery room; 80 intensive care beds; and 16 intermediate, light, limited care wards. The maximum patient flow rate, for which the helicopter facility and the casualty reception area were designed, is 300 patients per 24 hours. There is a limited capability to receive casualties from boats.

d. The US Army has the shore-to-ship medical evacuation mission on an area support basis for Marine forces deployed on land.

5-8. Airborne and Air Assault Operations

a. The airborne and air assault operational forces are specialized forces employed to maximize their design characteristics. Airborne units are a flexible force that can be strategically or tactically deployed. They can be inserted rapidly anywhere in the world as either a deterrent or strike force. Air assault units are flexible and lethal fighting organizations. They are ideally suited for rapid employment to critical areas beyond the reach of ground forces.

b. After airborne forces have landed in the objective area, they reorganize and maneuver to seize objectives. When it is necessary for assault aircraft to land in the drop zone, they are parked and unloaded rapidly. Then, they may be used to transport soldiers injured during the parachute assault. It must be understood that organic medical units may experience an overload of patients during the early phases of an airborne assault. These units have to hold the patients until either ground link-up is made or evacuation can be established at airheads. Aeromedical evacuation from the airhead is accomplished using tactical and strategic USAF aircraft.

c. The air assault division's organic aircraft have the ability to attack from any direction, overfly obstacles, and bypass enemy positions. Evacuation of patients in the assault phase is accomplished by division air ambulances. Air ambulances may accompany the air assault task force (AATF) or respond from laager sites once the initial assault has taken place. If air ambulances are providing on-call support, it will be necessary to fly secure air avenues of approach.

d. When both airborne and air assault divisions have been employed and become a part of other conventional forces, their operations are similar to that of light infantry forces. During initial deployment, division medical evacuation assets may be used to evacuate patients to the airhead for air evacuation directly to corps hospitals.

5-9. Army Special Operations Forces

a. The ARSOF often operate far removed from conventional CHS and must be more self-reliant and sustaining than conventional forces. Accordingly, SOF medical personnel receive enhanced medical training above that provided for a combat medic. The SOF medic is trained as an independent care practitioner and is qualified to provide ATM to combat casualties. When deployed on independent operations, the two SOF medics are the sole source of medical care for their operational detachment and the indigenous forces (and their families) that the detachment supports. They can train the indigenous populace in basic medical skills and establish an austere CHS system. Nonmedical ARSOF personnel receive medical training at the combat lifesaver level.

b. Although the ARSOF health care provider receives enhanced medical training exceeding the level and scope found in conventional forces, he depends heavily on the conventional CHS system to conserve the combat strength of the ARSOF (particularly in the area of medical evacuation where the ARSOF does not have a dedicated system). Ideally, medical evacuation for ARSOF personnel should follow the doctrinal flow sequence. The ARSOF CHS planner must be innovative and follow the tenets of immediate far forward stabilization. He directs evacuation to the appropriate MTF when the condition of the patient warrants it, with whatever means of transportation are available. Medical evacuation of ARSOF casualties is an operational matter. That is, it must reflect the commander's concept of the operation. It can only succeed when the CHS planner integrates the medical evacuation plan with the tactical plan and logistics airflow.

c. Conventional medical evacuation assets are not normally used when operations are conducted in hostile and denied areas. The conventional medical evacuation system is used once the casualty is extracted from the hostile or denied area. For additional information on CHS to ARSOF, refer to FM 8-10-1 and FM 8-42.

5-10. Military Operations on Urbanized Terrain

a. Throughout history, battles have been fought on urbanized terrain. Some recent examples include Hue, Beirut, and Panama City. Military operations on urbanized terrain (MOUT) are those military actions planned and conducted on a terrain where man-made structures impact on the tactical options available to the commander. This terrain is characterized by a three-dimensional battlefield, having considerable rubble, ready-made fortified fighting positions, and an isolating effect on all combat, CS, and CSS units. In this environment, the requirement for a sound and understandable evacuation plan cannot be overstated. Of concern to CHS and tactical planners is the need to plan, train, prepare, and equip for evacuation from under, above, and at ground level

b. Conducting medical evacuation operations in the MOUT environment challenges the CHS planner. He must ensure that the CHS plan includes special or unique materiel requirements or improvised use of standard equipment. The plan must be sufficiently flexible to support unanticipated situations.

(1) Special equipment requirements include, but are not be limited to—

- Axes, crowbars, and other tools used to break through barriers.

- Special harnesses; portable block and tackle equipment; grappling hooks; collapsible litters; lightweight collapsible ladders; heavy gloves; and casualty blankets with shielding. This equipment, using pulleys, is for lowering casualties from buildings or moving them from one building to another at some distance above the ground.

- Equipment for the safe and quick retrieval from craters, basements, sewers, and subways. Casualties may have to be extracted from beneath rubble and debris.

(2) Air ambulances equipped with a rescue hoist may be able to evacuate casualties from the roofs of buildings or may be able to insert needed medical personnel and supplies.

(3) Effective communications will be degraded in the MOUT environment. Line of sight radios will be ineffective and individual soldiers will not have access to radio equipment. The task-organized medical evacuation teams will have difficulty in locating injured or wounded soldiers due to their isolation within buildings, or by being hidden by rubble and debris. Alternate forms of communications, such as markers, panels, or field expedients (fatigue jackets or T-shirts) can be displayed by the wounded or injured soldiers indicating where they may be found.

c. Patient collecting points must be preplanned and established at relatively secure areas accessible to both ground and air ambulances. The location of these points should be indicated on the CHS overlay to the OPLAN. Patient collecting points should—

- Offer cover from enemy fires.
- Be located as far forward as the tactical situation permits.
- Be identified by an unmistakable feature (natural or man-made).
- Allow rapid turnaround of ambulances.

d. Route markings to the MTF and display of the Geneva Red Cross at the facility must be approved by the tactical commander. (Camouflaging or not displaying the Geneva Red Cross can forfeit the protections, for both medical personnel and their patients, afforded under the Geneva Conventions. Refer to Appendix A and FM 8-10 for additional information.) The location of the MTF must be as accessible as possible, but well separated from fuel and ammunition depots, motor pools, reserve forces, or other lucrative enemy targets, as well as civilian hazards such as gas stations or chemical factories.

e. Medical evacuation in the MOUT environment is a labor-intensive effort. Due to rubble, debris, barricades, and destroyed roadways, much of the evacuation effort must be accomplished by manual litter teams. When this occurs, an ambulance shuttle system or litter shuttle should be established. The shuttle system reduces the distance that the wounded or injured soldiers have to be carried by the litter teams. This enhances the litter teams effectiveness by providing brief respites and reducing fatigue. Further, the litter teams are retained in the forward areas. They are familiar with the geography of the AO and what areas have or have not been searched for casualties. In moving patients by litter, you should—

- Use covered evacuation routes such as subways, whenever possible.

- Use easily identifiable points for navigation and PCPs.

- Rest frequently by alternating litter teams.

(1) When using ground evacuation assets in support of MOUT, the CHS planner must be aware that built-up areas may have significant obstacles to vehicular movement. Factors requiring consideration include the following:

- Transportation operations within the urban terrain are complicated and highly canalized by rubble and other battle damage.

- Bypassed pockets of resistance and ambushes pose a constant threat along evacuation routes.

- Land navigation with most tactical maps proves to be difficult. Using commercial city maps when available can aid in establishing evacuation routes.

- Ambulance teams must dismount from the ambulance, search for, and rescue casualties.

- Movement of patients becomes a personnel intensive effort. There are insufficient medical personnel to search for, collect, and treat the wounded. Assistance in the form of litter bearers and search teams is required from supported units, as the tactical situation permits.

- Refugees may hamper movement into and around urban areas.

- Dislocated civilians and EPWs are provided medical treatment in accordance with the command policy and the Geneva Conventions.

(2) When using aeromedical evacuation assets in support of MOUT, the CHS planner must consider enemy air defense capabilities and terrain features, both natural and man-made, within and adjacent to the built-up areas. Aeromedical evacuation (helicopters) is the preferred means of evacuation in MOUT. Considerations in the use of air ambulances include the following:

- Movement is highly restricted and is canalized over secured areas, down wide roads, and open areas.

- Telephone and electrical wire and communications antennas hinder aircraft movement.

- Secure LZs must be available.

- Landing zones may include buildings with helipads on their roofs or sturdy buildings, such as parking garages.

- Snipers with air defense capabilities may occupy upper stories of the urban area's taller buildings.

f. Medical personnel require special training in the tactics, techniques, and procedures required to operate in a MOUT environment. If they are to survive in this environment, they must know how to—

- Cross open areas safely.
- Avoid barricades and mines.
- Enter and depart safely from buildings.
- Recognize situations where booby traps or ambushes are likely and would be advantageous to the enemy.

Detailed information on the conduct of combat operations in the urban environment is contained in FM 90-10-1.

NOTE

Combat health support personnel do not engage in offensive-type actions. They must rely on the supported unit to provide covering fires and to clear rooms and buildings prior to entry.

(1) Many of the techniques used in a mountainous terrain for the extraction and evacuation of patients can be modified and applied to medical evacuation in an urbanized terrain (paragraphs 9-11 through 9-13).

(2) Combat health support personnel must practice and become proficient in using a grappling hook, scaling walls, and rappelling. Rappelling techniques can be used to gain entry into upper levels of buildings as well as accompanying the patient during vertical extraction and evacuation. By using the SKED litter, the patient can be secured inside the litter for ease in vertical extractions and evacuations.

(*a*) When using a grappling hook, care must be taken to select a suitable grappling hook and rope. The grappling hook should be sturdy, portable, and easily thrown, and be equipped with hooks that can hold inside a window. The scaling rope should be 5/8 to 1 inch in diameter and long enough to reach the objective window. Knots are tied in the rope at 1-foot intervals to make climbing easier.

- When throwing the grappling hook, stand as close to the building as possible (Figure 5-1). The closer you stand, the less the exposure to enemy fires. The closer the range, the less horizontal distance the hook must be thrown.

- Allow the rope to play (pay) out freely. Make sure you have enough rope to reach the target. Hold the hook and a few coils of rope in your throwing hand. The remainder of the rope,

in loose coils, should be in your other hand. The throw should be a gentle, even, upward lob of the hook, with the other hand releasing the rope as it plays (pays) out.

- Ensure that the grappling hook has a solid hold before beginning to climb. Once the grappling hook is inside the window (or on the roof), pull on the rope to obtain a good hold. When using a window, pull the hook into one corner to ensure the chances of a good "bite" and to reduce exposure to lower windows during the climb.

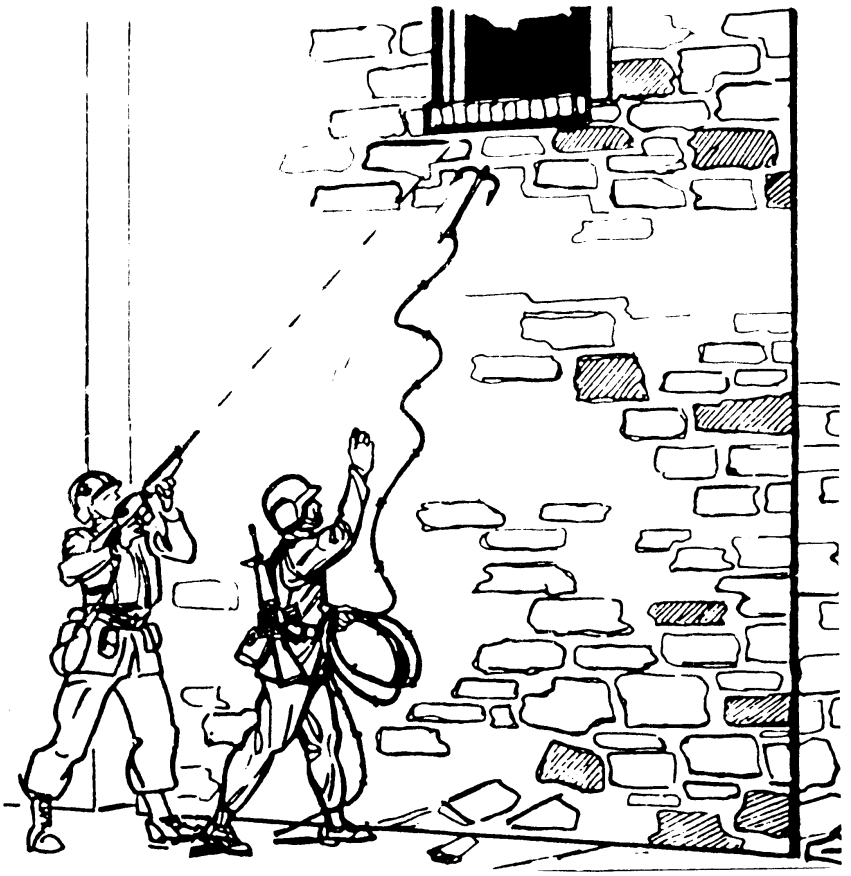

Figure 5-1. Hook thrown at close range.

(*b*) When forced to scale a wall during exposure to enemy fire, all available concealment must be used. The employment of smoke and diversionary measures improve the chances of a successful exposed movement. When using smoke for concealment, soldiers must plan for wind direction and the tactical use of smoke (Appendix F).

- A soldier scaling a wall with a rope should avoid silhouetting himself in windows of uncleared rooms and avoid exposing himself to enemy fires from lower windows. Combat medics will require support from the combat elements to provide covering fires and precede the medic to clear rooms which must be bypassed to reach the casualty.

- The soldier enters the objective window with a low silhouette (Figure 5-2). Entry can be head first; however, the preferred method is to hook a leg over the windowsill and enter sideways, straddling the ledge.

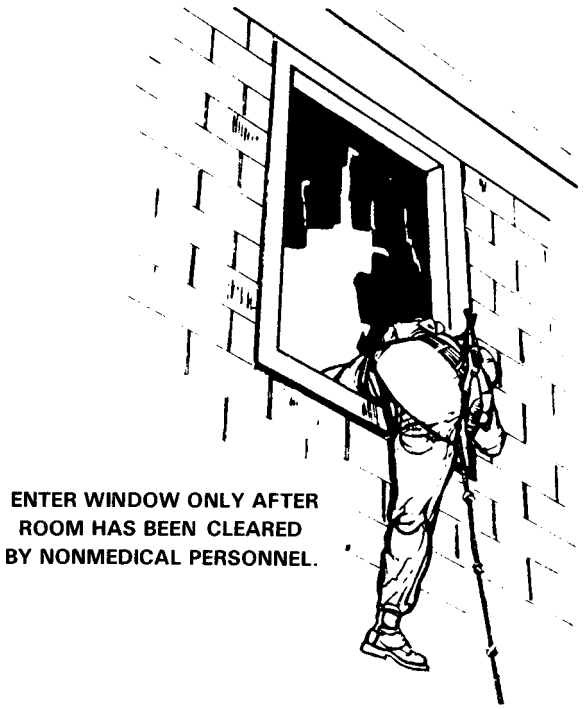

Figure 5-2. Medic entering the objective window.

(*c*) Rappelling is a combat technique soldiers can use to descend from the rooftop of a tall building into a window. Soldiers conducting operations on urbanized terrain should learn the basic seat-hip rappel. When using this technique to lower a litter, one or two soldiers rappel down along the sides of the litter patient. By escorting the litter, the soldiers can ensure that the patient is not further injured by slamming into the wall as he is lowered. When the patient is safely on the ground, the individual who lowered the patient, rappels down.

g. The scenario presented in this subparagraph is provided to illustrate a way in which evacuation operations can be conducted in MOUT.

(1) The following information is provided as a basis for this scenario:

(*a*) In preparation for the upcoming battle, the tactical planners determine that the battlefield will include combat within the confines of a city with a population of approximately 750,000. The CHS planners are involved early-on in the planning process. The medical evacuation mission is complicated by the terrain features and will require special equipment to satisfactorily accomplish the mission.

(*b*) The enemy has already entered the city and is preparing defensive positions.

(*c*) Preparatory fires and bombing runs made on key industrial targets within the city have disrupted sanitation efforts by destroying sewer lines, breaking water mains, and canceling garbage pick up and disposal.

(*d*) The downtown area of the city has numerous multistoried buildings. Further, a number of parking garages are within the downtown area. Residential housing consists of apartment complexes and low-cost housing projects. There are a few small parks; however, the downtown area is considered to be quite crowded.

(*e*) Residential and small business suburbs spread out from the downtown area.

- North of the city is an industrial park and most of the city's heavy industry is located in this area. The major heavy industries are fertilizer, ammunition, and plastic manufacturing.

- East of the downtown area is comprised of some larger residential estates, track housing, parks, golf courses, small businesses, and some multifamily dwellings. A river flows along the eastern border of the city that has commercial interests in transportation of commodities and fishing.

- West of the downtown area is the largest residential population with middle income housing, duplexes, and large apartment complexes. Small businesses which support the population density are also found here. Numerous schools, parks, and churches are contained in this sector. There is also some light industry, such as clothing manufacturers, located here. The western limits of the city are bordered by high mountains. This eliminates access to the northern section of the city from this direction.

- South of the downtown area is mainly residential with a gradual shift from single family homes and apartment complexes to small farms, landfills, and junkyards.

(*f*) The friendly forces are approaching the city from the southwest. Intelligence reports indicate that enemy concentrations are within the downtown area and to the north. Due to the natural terrain features of the city, friendly forces will be required to fight through residential and the downtown areas to reach the mission objective of neutralizing the ammunition plants in the northern sector.

(2) Prior to actual deployment of combat forces, the evacuation elements—

- Train nonmedical personnel on litter-carrying techniques.
- Obtain necessary nonmedical equipment for extraction and evacuation.
- Provide instructions on alternate forms of communications for indicating where wounded soldiers are located.
- Predesignate PCPs and AXPs and include these positions on the CHS overlay.
- Prepare strip maps of evacuation routes, if applicable.

(3) The medical evacuation mission is undertaken by—

- Establishing the initial BAS in an elementary school playground and gymnasium. The playground area provides sufficient space to establish an LZ for aeromedical evacuation assets and turnaround for ground ambulances. Site selection for the BAS is important as it must be easily accessible by both ground and air and not close to lucrative enemy targets or civilian hazards, such as gas stations.
- Echeloning the medical treatment element. This enables the CHS to maintain contact with and be accessible to the combat forces. A portion of the evacuation resources are deployed with the medical treatment element to assist in quickly clearing the battlefield of wounded.

(4) Fighting is light through the residential area; however, caution must be used as the combat elements bypass pockets of resistance and pose a threat to medical treatment elements and evacuation assets.

(5) Entering the downtown area, the fighting intensifies. As the downtown area has not been secured, the threat to air ambulances is too great during the initial phase of the battle. When the roads become impassable due to rubble, debris, barricades, or artillery damage, the ambulance crews dismount from their vehicles, search for, and administer EMT to the wounded. During the heat of the battle, combat soldiers will be unable to serve as litter bearers. Ambulance crews, therefore, are responsible for evacuating litter patients, directing ambulatory patients to PCPs, and administering EMT if the casualty has not already been treated by the combat medic.

(6) A shuttle system is established to enable litter teams to carry the wounded to the fringes of the downtown area. Ground ambulances can evacuate the wounded to the BAS site where air ambulances can evacuate those patients requiring further evacuation to the rear. As the tactical mission evolves and control of the various sectors is gained by friendly forces, aeromedical evacuation resources can be

deployed farther forward. However, caution must be exercised because bypassed and isolated pockets of resistance still remain a threat to evacuation assets.

- Combat medics maintain contact with the combat elements and employ techniques necessary to operate in this environment, such as using doorways, moving parallel to buildings, selecting his next position, and crossing open areas (Figures 5-3 through 5-5).

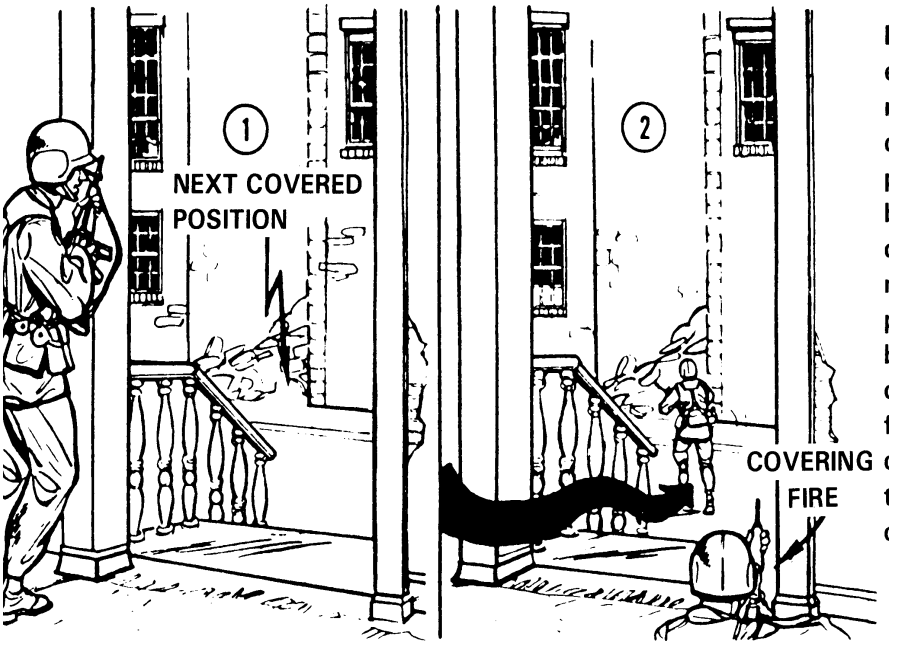

Doorways should not routinely be used as entrances and exits since they are normally covered by enemy fire. If a medic must use a doorway as an exit, he should move quickly through it to his next position, staying as low as possible to avoid silhouetting himself. Before exiting the building, the soldier selects his next covered position. He quickly exits the doorway, keeping as low as possible, and moves quickly to his next position. Preselection of positions, speed, a low silhouette, and use of covering fires by nonmedical personnel must be emphasized in exiting doorways. If possible, litters should be vertically lowered from windows, rather than attempting to exit through a doorway. However, if it becomes necessary to exit through a doorway, the supported unit should provide covering fire for the litter team.

Figure 5-3. Use of doorways.

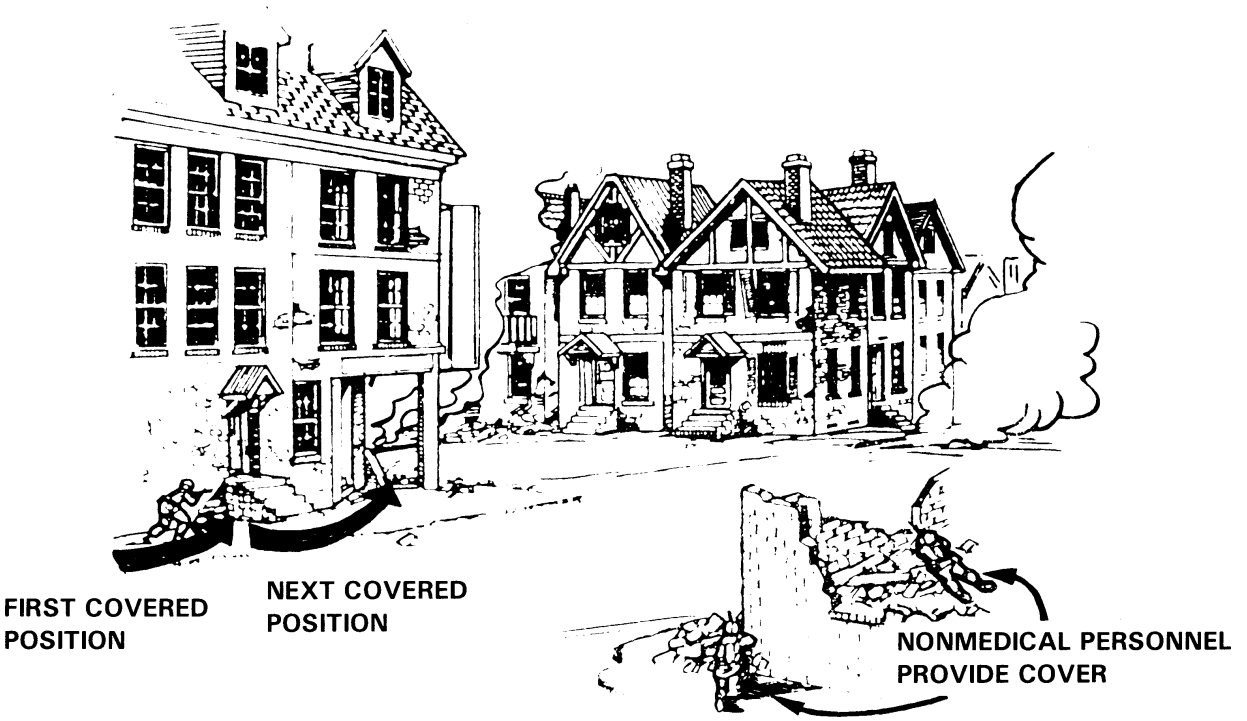

Medics may not always be able to use the inside of buildings for an evacuation route. Therefore, they may have to move on the outside of the buildings. Smoke and covering fires provided by the supported unit should be used to hide movement. In correctly moving on the outside of a building, the medic hugs the side of the building, stays in the shade, presents a low silhouette, and moves rapidly to his next position.

Figure 5-4. Moving outside of building.

Open areas, such as streets, alleys, and parks, should be avoided whenever possible. They are natural kill zones for enemy crew-served weapons. This does not mean, however, that they cannot be crossed. They can be crossed safely if certain fundamentals are applied by the individual or small-unit leader. The most common mistake in crossing an open area is crossing diagonally from one point to another. In so doing, the soldier exposes himself to enemy fire for too long. In using the correct procedure for crossing an open area, the soldier employs smoke between buildings to conceal his movement (or movement of a litter team). Also, he does not cross diagonally from point A to point B. Instead he runs the shortest distance between the buildings, then moves along the far building to point B. By so doing, he reduces the time he is exposed to enemy fire.

Figure 5-5. Crossing of open area.

- Combat medics and ambulance crews will encounter obstructions, barricades, and booby traps which will detract from the accomplishment of the evacuation mission. Medics must be familiar with these antipersonnel obstacles (Figure 5-6) and know how to circumvent or neutralize them.

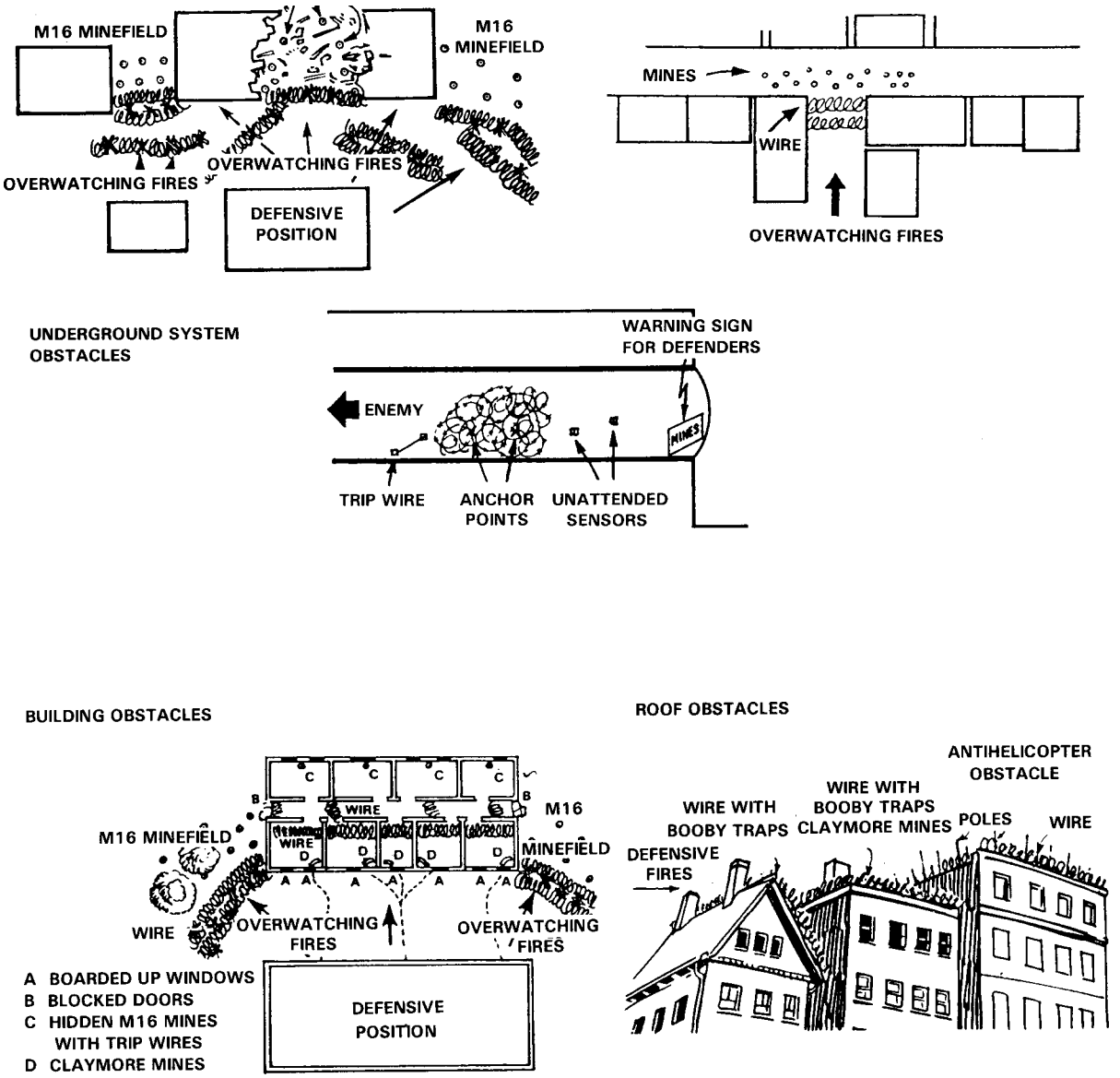

Figure 5-6. Antipersonnel obstacles.

- Combat medics and ambulance crews will also need to be familiar with lower-level entry techniques (Figure 5-7) to gain access to areas where casualties have occurred.

- Once the main battle pushes through the downtown area and friendly forces gain control of this terrain, air ambulances can be employed to hasten the evacuation effort. Air ambulances can be used to rescue wounded personnel from on top of buildings or downtown parking garages.

- As control over the terrain is gained, the BAS can be echeloned further forward, thereby reducing the distance required for evacuation. If possible, the medical treatment element should be housed in a structure, as parks within the city area may not be secure from sniper fire.

- On those roads that remain passable, a control problem may be encountered as refugees will be using these roads to escape the battle. Evacuation vehicles and crews should be prepared for these delays and have sufficient supplies to care for the patient being evacuated.

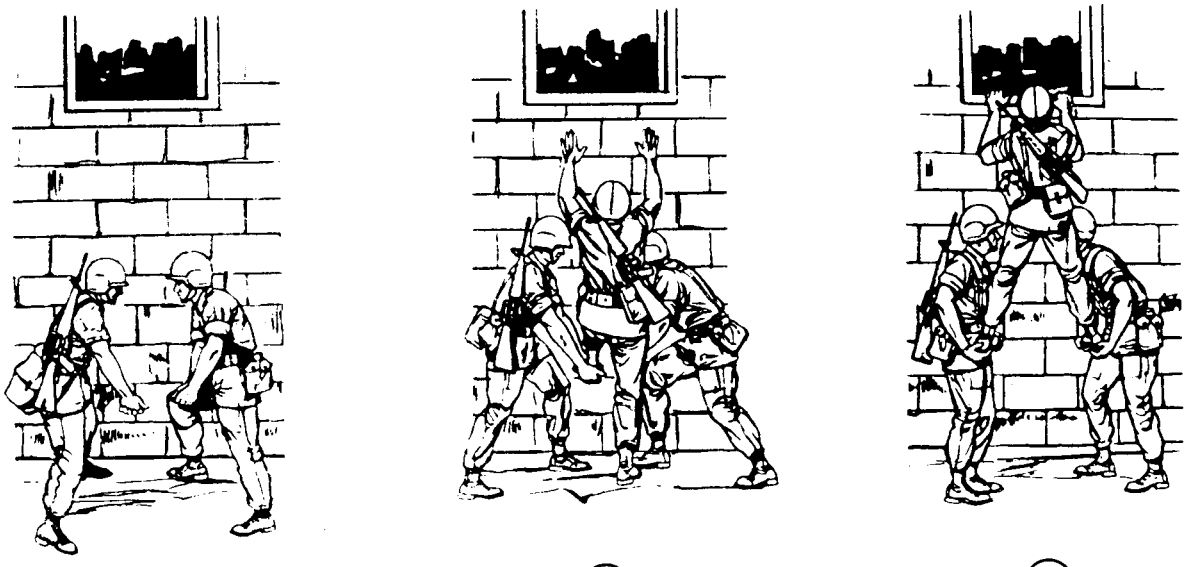

1 TWO SOLDIERS BEND OVER FACING ONE ANOTHER WITH THEIR HANDS CUPPED TOGETHER.

2 A THIRD SOLDIER RAISES HIS FEET INTO THE CUPPED HANDS OF THE TWO OTHERS.

3 ONCE BOTH FEET ARE IN THE CUPPED HANDS, THE TWO SOLDIERS PUSH UP ON THE THIRD SOLDIER'S FEET, LIFTING HIM UPWARD AND INTO THE ENTRANCE.

Figure 5-7. Lower-level entry techniques.

THE ONE-MAN LIFT

ONE SOLDIER, WITH HIS BACK OR SIDE BRACED AGAINST THE BUILDING AND WITH HIS HANDS CUPPED, ALLOWS ANOTHER SOLDIER TO RAISE ONE FOOT UP INTO HIS CUPPED HANDS, AND THEN LIFTS HIM UP AND INTO THE ENTRANCE.

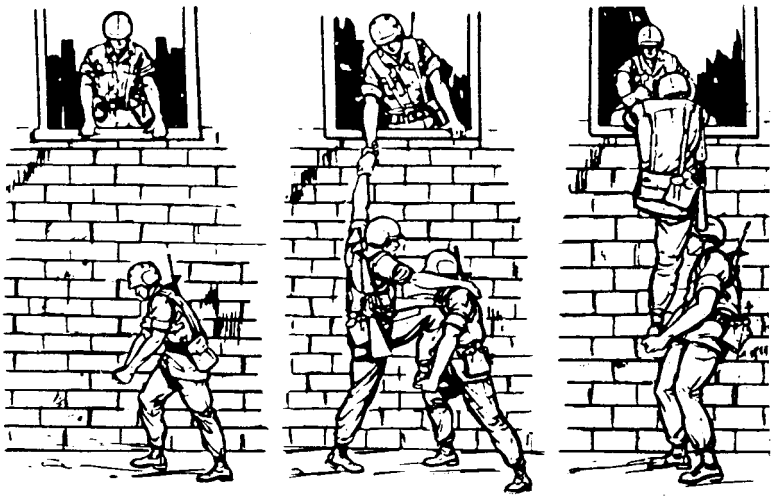

1 2 3

THE TWO-MAN LIFT

WHEN THE FIRST TWO SOLDIERS ARE INSIDE THE BUILDING AND ANOTHER SOLDIER SEEKS ENTRANCE, THE TWO ALREADY INSIDE MAY ASSIST THE OTHER BY PULLING HIM UP INTO THE BUILDING.

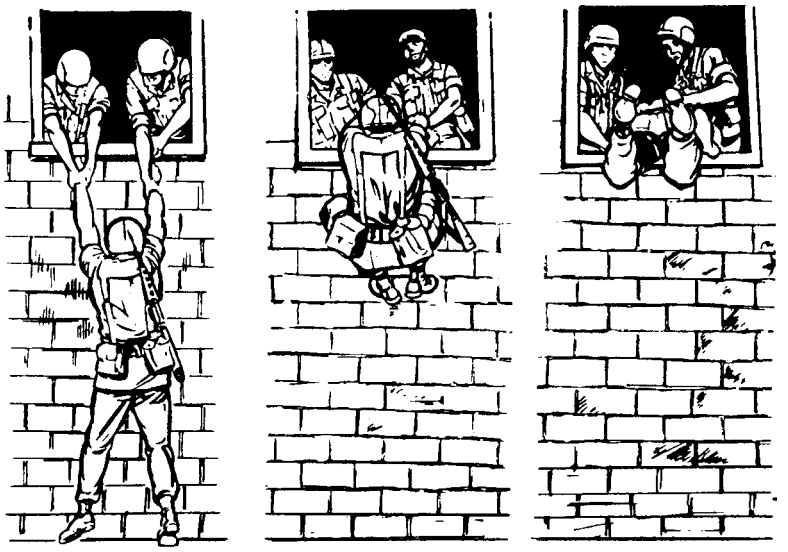

1 2 3

Figure 5-7. Lower-level entry techniques (continued).

- As troops are relieved of their combat, CS, and CSS duties, they can be used as litter bearers. The distance that the patients are required to be moved by litter teams will determine the number of relay points established in the litter shuttle. The relay points should be spaced so that the litter bearers are not overly fatigued nor taken too far away from the terrain in which they are familiar.

- Medical evacuation teams will need to systematically search the battle area for casualties. Those casualties who can provide a signal for their location (paragraph *b*(3) above) will hasten their rescue and evacuation. The special equipment needs for the extraction and evacuation of casualties become evident during this phase of the evacuation effort. Some casualties will need to be evacuated from upper floors of buildings where access from ground level is not possible. Entry to some locations will be from the roof going down to lower floors, or from neighboring buildings across the intervening space. Techniques and procedures for these extractions must be practiced before the actual operation.

- The initiation of intravenous (IV) fluids by combat lifesavers, combat medics, and evacuation crews will enhance the casualties chances of survival with the delayed evacuation process existing on urbanized terrain.

- As the main battle enters the industrialized sector of the city, the number of multifloored buildings decreases. However, many of the same obstacles face the medical personnel responsible for evacuation. Added to the types of injuries incurred during MOUT, the increased chance of fire, explosion, and toxic fumes or vapors are present in the industrial sector. Combat health support resources and evacuation assets must be positioned to decrease the vulnerability to these types of hazards.

- Combat health support personnel must be familiar with their responsibilities in regards to the Geneva Conventions and civilian refugees, detained persons, and EPWs (Appendix A). Procedures should be established in the unit TSOP (Appendix G).

5-11. Cross-Forward Line of Own Troops Operations

Medical evacuation support of cross-FLOT operations is a difficult mission requiring detailed planning. Although there are a number of different types of cross-FLOT operations, only two will be discussed in this paragraph. Medical evacuation support for these operations is normally provided by a corps air ambulance company (GS) working in concert with the corps aviation brigade. A medical evacuation team will be tasked-organized to provide this support.

a. Deep Attack/Raid. This operation is normally the responsibility of an attack helicopter battalion in the corps aviation brigade. While it is feasible that air ambulances could accompany the attack helicopters to the objective, it is more likely that the evacuation team will be field sited in a laager site. The laager site (hide position) is located in the vicinity of the FLOT. By forward stationing the air ambulances, the risk and possible compromise of the operation is lessened. The medical evacuation team provides downed aircrew rescue, EMT, and evacuation support. The air ambulances should be equipped with the rescue hoist, extraction equipment, personnel locator system (PLS), and enhanced position location and reporting system (EPLRS). The air ambulances remain in the hide position, with only passive systems turned on, tracking the process of the raid via limited secure communications. The attack team should

report, in the blind, only at prearranged communications checkpoints, or upon the downing of an aircraft. If the wingman is able to retrieve the downed crew, they are taken to a preplanned PCP for transfer to an air ambulance. If there are injured crew members or the terrain precludes landing, the wingman requests medical evacuation support. The wingman should provide cover and armed escort for the air ambulances during the rescue and back across the FLOT. The patients are evacuated to the nearest Echelon II treatment facility in the brigade sector.

b. Brigade Task Force Cross-Forward Line of Own Troops Operations. This type of operation employs airborne or air assault insertions into the objective, followed by a penetration and linkup. Medical evacuation teams are normally attached directly to the TF to provide medical treatment and evacuation support, both en route and at the objective. Air ambulances accompany the assault aircraft, carrying the treatment teams and medical supplies and equipment; this enables the assault aircraft to carry more combat troops. Following the assault aircraft into the LZ, the medical evacuation team provides immediate evacuation support during the insertion and consolidation. Ground ambulances normally do not accompany the assault forces, thereby limiting the medical evacuation assets to air ambulances. The tactical commander may determine that casualties will be held until linkup rather than being evacuated out. The commander's decision is influenced by the expected duration of the operation, casualty density, METT-TC, and acceptable risk in evacuating URGENT or URGENT-SURG patients from the objective area. Once linkup is achieved, ground evacuation assets will become available.

c. Planning Considerations and Factors. The planning considerations and factors for cross-FLOT operations include—

- Expected duration of the operation.
- Casualty estimates.
- Evacuation distances and time factors.
- Location of preplanned PCPs.
- Location of AXPs.
- Requirements for Class VIII supply/resupply.
- Requirements for medical equipment.
- Aircraft operational readiness (maintenance support will not be available; aircraft, therefore, must have sufficient bank time available to support the entire mission).
- Aircraft configuration requirements.
- Evacuation routes/air corridors.
- Signal operating instructions.

- Equipment (less medical) destruction procedures and policies.
- Nuclear, biological, and chemical decontamination procedures.

5-12. Combat Search and Rescue Operations

Air ambulances do not routinely participate in combat search and rescue (CSAR) operations, and are not protected from attack while engaged in a CSAR mission over contested or denied territory. If the involvement in these operations consists solely of evacuating wounded crew members from a crash site in friendly territory, air ambulances retain the protection accorded to them under the provisions of the Geneva Conventions. (Air ambulances flying in contested or denied areas are not protected from attack and may be summoned to land. Air ambulances must obey a summons to land. Personnel retain their protections under the Conventions.) However, if air ambulances participate in the actual search and rescue phases of the operation, they are not solely engaged in the provision of CHS and are, therefore, not afforded the protections. Further, because the mission does not fall within the protected activities, the air ambulances participating in the CSAR operation must remove the Geneva Conventions emblem from the aircraft. Refer to FM 1-300 and FM 8-10-26 for additional information on CSAR operations.

5-13. Minefield Operations

Medical personnel are often confronted with medical evacuation operations involving casualties extracted from minefields. Medical evacuation assets operating in areas with known minefields or with a high potential for discovering minefields, should ensure they have sufficient medical supplies and equipment aboard the evacuation platform to sustain severe trauma patients during evacuation. Local additions to the authorized MES may be approved by the command surgeon. Techniques for extracting casualties from minefields and minefield survival rules are provided in paragraphs 8-9 and 8-10.

CHAPTER 6

MEDICAL REGULATING

6-1. General

Medical regulating is the coordination and control of moving patients to MTFs which are best able to provide the required specialty care. This system is designed to ensure the efficient and safe movement of patients.

6-2. Purposes of Medical Regulating

a. Medical regulating entails identifying the patients awaiting evacuation, locating the available beds, and coordinating the transportation means for movement. Careful control of patient evacuation to appropriate hospitals is necessary to—

- Effect an even distribution of cases.
- Ensure adequate beds are available for current and anticipated needs.
- Route patients requiring specialized treatment to the appropriate MTF.

b. The factors that influence the scheduling of patient movement include the following:

- Patient's medical condition (stabilized to withstand evacuation).
- Tactical situation.
- Availability of evacuation means.
- Locations of MTFs with special capabilities or resources.
- Current bed status of MTFs.
- Surgical backlogs.
- Number and location of patients by diagnostic category.
- Location of airfields, seaports, and other transportation hubs.
- Communications capabilities (to include radio silence procedures).

6-3. Medical Regulating Terminology

As medical regulating may include coordination with other Services, it is necessary to use the correct terminology. These terms include—

a. Intracorps Medical Regulating. This is the system by which patients are transferred or evacuated from an FSB or main support battalion (MSB) to a corps hospital (CSH).

b. Intratheater Medical Regulating. This is the system by which patients are transferred or evacuated from one hospital to another within the TO. This includes evacuations between CZ hospitals, between EAC hospitals, or from CZ hospitals to EAC hospitals.

c. Intertheater Medical Regulating. This is the system by which patients are evacuated from hospitals located in the TO to hospitals located in the support base.

d. Patient Administrator. The patient administrator (PAD) accomplishes the medical regulating function at the hospital level in addition to his normal duties. His medical regulating functions include consolidating all evacuation requests within the hospital and forwarding an evacuation request to his next higher headquarters for action. The PAD is also responsible for keeping his next higher MRO apprised of the current beds available and the operating room (OR) status.

e. Medical Regulating Officer. The MRO functions as the responsible individual at C2 headquarters for receiving and consolidating evacuation requests. These requests are initiated by the DMOCs or subordinate hospitals. The MRO also maintains the current patient status, bed status, and the surgical backlog at subordinate hospitals. His duties include—

- Managing what patient classes are regulated into his facility.
- Determining what resources are available to move the patients and coordinating for the use of these assets.
- Maintaining accountability of patients within the MTFs.
- Preparing reports as required.

f. Theater Patient Movement Requirements Center. The Theater Patient Movement Requirements Center (TPMRC) is a joint agency normally located at or near the unified theater headquarters. The theater surgeon supervises the functions of this office. These functions include—

- Maintaining direct liaison with the Global Patient Movement Requirements Center (GPMRC), the MROs of component Services, and the transportation agencies which furnish the means for evacuation.
- Obtaining periodic reports of available beds from the Services MROs providing hospitalization.
- Selecting hospitals based on the reported bed availability to receive patients within EAC.

g. Global Patient Movement Requirements Center. The GPMRC is a joint agency located in CONUS and established by the US Transportation Command (USTRANSCOM). The GPMRC receives

requests from the TPMRCs. The primary role of the GPMRC is to apportion intertheater assets to the TPMRCs, collaborate and integrate proposed TPMRC intertheater plans and schedules, and communicate lift and bed requirements. The destination hospital is determined based on the patient's medical needs, the available transportation resources, and MTF capabilities.

h. Theater Aeromedical Evacuation System. The Theater Aeromedical Evacuation System (TAES) is a functional organization which is provided by the USAF and performs the mission of theater AE. It is composed of the following:

- Aeromedical evacuation control center (AECC).
- Mobile aeromedical staging facility.
- Aeromedical staging facility/aeromedical staging squadron.
- Aeromedical evacuation liaison team (AELT).
- Aeromedical evacuation operations team (AEOT).
- Aeromedical evacuation crews.
- Critical care air transport (CCAT) teams.

i. Aeromedical Evacuation Control Center. The AECC is a USAF element and is responsible for the USAF AE mission within the TO. The AECC also coordinates for evacuation from EAC to the support base. The AECC is the core component of the TAES and is normally collocated with the theater air operations center (AOC) for intratheater and the tanker airlift control center (TACC) for intertheater coordination of AE operations using USAF aircraft. The CONUS and strategic AOC for the USAF is the TACC located at Scott Air Force Base (AFB), Illinois. All AE elements (AEOT, AELT, or MASF) within the TO operationally report to the AECC.

j. Mobile Aeromedical Staging Facility. The MASF is a USAF staging facility employed at forward airfields in the CZ to provide a temporary staging capability for preparation of patients being evacuated from corps to EAC hospitals. The MASF is employed to ensure patients are prepared for aircraft loading with the main focus of reducing AE aircraft ground time.

k. Aeromedical Staging Facility or Aeromedical Staging Squadron. The ASF/ASTS is a USAF staging facility employed at or near airfields in EAC and CZ. It also provides a temporary staging capability for patients being evacuated from EAC or another theater to CONUS. The ASF/ASTS is employed to ensure patients are prepared for aircraft loading with the main focus of reducing AE aircraft ground time.

l. Military Sealift Command. The Military Sealift Command (MSC) is the USN element responsible for coordinating movement of supplies, equipment, and personnel into the TO by Navy ships. Further, it coordinates, through the TPMRC, the medical evacuation of patients by ship from the TO to the support base, as required.

m. *Corps Movement Control Center*. The corps movement control center (CMCC) is the corps movement control organization. It provides centralized movement control and highway regulation for movement of personnel and material into, within, and out of the corps area. When USAF capabilities are exceeded, the CMCC coordinates requests for additional air and ground resources. It also obtains the necessary clearances to support the medical evacuation mission from the CZ.

n. *Theater Army Movement Control Agency*. The Theater Army Movement Control Agency (TAMCA) mission is to provide movement management services and highway traffic regulations and to coordinate for personnel and material movements into, within, and out of the theater. The TAMCA coordinates with allied and host-nation (HN) movement control agencies. It also coordinates with the USTRANSCOM and its subordinate units (such as the Air Mobility Command [AMC] and MSC) and prepares movement and port clearance plans and programs.

o. *Joint Military Transportation Board*. The Joint Military Transportation Board (JMTB) is a joint staff composed of members of the Army, USAF, and USN that coordinates transportation requirements for patients requiring intertheater evacuation.

p. *Defense Medical Regulating Information System*. The Defense Medical Regulating Information System (DMRIS) is an on-line interactive computer system for reporting patients requiring evacuation.

q. *Automated Patient Evacuation System*. The Automated Patient Evacuation System (APES) is the system that automates the patient movement portion of medical evacuation.

6-4. Medical Regulating from the Division

a. Medical regulating in and from the division is the responsibility of the DMOC (the patient disposition and reports branch). Medical regulating in the division is not as formalized as the rest of the medical regulating system. It is usually operated procedurally so as not to depend solely on communications to effect rapid evacuation. The medical regulating function in the DMOC is concerned primarily with—

- Tracking the movement of patients throughout the division MTFs and into the corps facilities.

- Monitoring the use of ambulance assets.

- Coordinating with the corps medical evacuation battalion when additional assets are needed.

- Coordinating with the USAF through the AELT to initiate preplanned high capacity air ambulance (HCAA) operations, when required. High capacity air ambulance operations are conducted when the evacuation distance between Echelon II MTFs and corps hospitals exceeds the capability and range of US Army air ambulances.

b. Corps air and ground ambulances placed in GS of the division are usually field sited in the division rear and tasked by the DMOC. When these assets go forward to the FSMC or the MSMC to

evacuate patients to corps MTFs, they have corps MTF destinations predetermined (blocks of beds). The DMOC, in coordination with the medical group/brigade MRO, establishes the number of patients a supporting corps hospital can accept during a particular period of time. These blocks of available beds are then provided to the GS ambulances prior to the call for missions.

NOTE

Under the MRI force structure, the medical group functions were absorbed by the medical brigade.

(1) Once an evacuation mission is completed, the originating division MTF contacts the patient disposition section of the DMOC and provides—

- Patient numbers by category and precedence.
- Departure times.
- Modes of transportation.
- Destination MTFs.
- Any other information required by TSOP.

(2) The DMOC, in turn, notifies the medical group/brigade MRO via the patient administration net, which is monitored by the corps MTFs. Since corps ground ambulances have no on-board communications ability and air ambulances have no amplitude-modulated-high-frequency (AM-HF) capability at present, all patient information is passed to the gaining MTFs via the patient administration nets. To reduce the turnaround time for ground ambulances and to move more serious patients to the CSHs in the corps rear—

- Air ambulances are given blocks of beds in the corps hospitals farther to the rear.
- Ground ambulances are normally given blocks of beds in the more forward deployed CSHs.

c. Medical evacuation can be effected immediately, procedurally, and under conditions of communications silence without interrupting the continuum of care by—

- Preparing patient estimates.
- Prioritizing and task-organizing ambulance support.
- Assigning blocks of hospital bed designations prior to the start of the mission.

6-5. Medical Regulating Within the Combat Zone

a. The requirement to transfer patients from one hospital to another within the CZ occurs. This results from—

- Surgical backlogs.
- Mass casualty situations.
- Specialty care requirements.
- Planned movement of an MTF.

b. When it is necessary to transfer a patient, the attending physician notifies the hospital PAD. The PAD consolidates all such requests from the hospital and requests movement authority from the medical group/brigade MRO.

c. If the medical group/brigade MRO can transfer the patient or patients to its subordinate hospitals, he designates the hospitals to receive the patients and notifies both the requesting and receiving hospitals of the transfer. The medical group/brigade MRO also tasks subordinate medical evacuation units for the assets to transfer the patients.

NOTE

Under the MRI force structure, the functions of the medical group are absorbed by the medical brigade. If all C2 headquarters are deployed, the medical brigade forwards medical evacuation requests to the corps MEDCOM. If the MEDCOM is not deployed, the medical brigade forwards the medical evacuation requests to the TPMRC.

d. If the medical group/brigade cannot provide the needed hospitalization within its own resources, the MRO forwards the request to the medical brigade/MEDCOM MRO for action. The medical brigade/MEDCOM MRO then designates the receiving hospitals and notifies the subordinate MROs. The medical group/brigade MROs disseminate the information to the hospital PADs and coordinate the evacuation resources for the transfer. The MRO also coordinates the regulation of patients to—

- Other US military service hospitals and naval hospital ships.
- Allied nations' military hospitals.
- Other authorized supporting facilities.

6-6. Medical Regulating from the Combat Zone to Echelons Above Corps

a. Hospital attending physicians and oral and maxillofacial surgeons submit daily reports to the hospital PAD listing the patients requiring evacuation. The PAD assembles this information and transmits the report to the medical group/brigade headquarters. This report is a request for transportation, as well as a notification of the number of patients requiring evacuation. The report classifies the patients according to—

- Diagnostic category.
- Desired on-load points.
- When the patients will be available for evacuation.

b. The medical group/brigade MRO consolidates these reports from each hospital attached to the medical group/brigade and forwards his report to the medical brigade/MEDCOM MRO. The medical brigade MRO consolidates the reports and transmits the data to the MEDCOM MRO.

c. If a TPMRC has been activated within the theater, the MEDCOM MRO consolidates all reports from the CZ medical brigades and forwards them to the TPMRC. The TPMRC designates hospitals in the EAC to receive the patients. The designation is based on the previously received bed status reports from all Service components and available means of evacuation. The TPMRC then notifies the MEDCOM MRO of designated hospitals. The MEDCOM MRO accomplishes this task if the TPMRC is not activated.

d. The primary means of moving patients from the CZ to the EAC is USAF aircraft. With the elements of the TAES deployed, it is possible to find AELTs at each echelon and as far forward as the corps hospitals. The AELT monitors the MRO patient evacuation requests. At the same time they use their organic communications capabilities to pass the requirements through the TAES to the airlift control center (ALCC), seeking an aircraft to perform the evacuation mission. The AELT, through the MRO patient movement request, requests the TPMRC/AECC to move patients. Included in the request are the originating medical facility (OMF) and the destination airfields. The airfields selected are those serving the hospitals designated to receive patients.

e. The AECC is a component of the TAES and performs the mission of coordinating the movement of and providing in-flight medical care to patients while under the USAF control. The AECC receives patient movement requirements from the TPMRC, then works with the AOC to meet the evacuation requirements.

f. The AOC coordinates the forward movement of cargo and personnel aboard USAF aircraft with other USAF units, Army transportation representatives, and USN agencies. Certain of these aircraft are scheduled to evacuate patients on their return trips. These aircraft seldom go forward solely to evacuate patients; however, these missions may be used for retrograde movement of patients. Dedicated or designated (scheduled) aeromedical airlift is the primary means of AE because of the reduced impact assigned AE has on cargo airlift capability.

g. After the schedules have been arranged, the AECC returns the detailed flight schedule to the MEDCOM MRO/AELT and the parent AE element.

h. The MEDCOM MRO, in coordination with the AELT, issues these instructions to the medical brigade MROs (with the authority to move patients in Army CZ facilities) and the receiving hospitals. The hospitals must prepare to receive the patients at the destination airfields. (This may be accomplished by collocating an ASMC at the airfield to receive the incoming patients.) The patients are sorted by destination hospital and moved by Army medical evacuation means. The instructions mentioned above include, as a minimum, the—

- Number of patients to be moved.
- On-load airfield.
- Destination airfield.
- United States Air Force aircraft mission number.
- Estimated time of arrival at the destination airfield.

i. The medical brigade/MEDCOM MRO issues the flight and movement instructions to its subordinate medical group/brigade MROs. The medical group/brigade MROs then direct the evacuation units and hospitals within their AOs to move the patients to the on-load airfield according to the arrival time of the aircraft. This movement must be closely controlled, as a MASF can accommodate up to 50 patients. The patients cannot be delivered to the MASF earlier than 6 hours prior to arrival of the aircraft and no later than 1 hour prior to arrival.

6-7. Medical Regulating Within Echelons Above Corps

a. Medical regulating within the EAC is similar to the system used within the CZ. Attending physicians or oral and maxillofacial surgeons within the Echelon III hospitals notify the hospital PAD of patients requiring evacuation to GHs. The PAD then consolidates the requests from the hospital and forwards the consolidated request to the medical group/brigade MRO. The MRO, in turn, consolidates the requests and forwards them to the MEDCOM MRO.

b. The MEDCOM MRO, based on periodic bed status and availability reports from subordinate hospitals, designates specific hospitals to receive the patients. The hospitals are designated based on bed availability, to include specialty beds, to support the specific patient. The MEDCOM MRO then notifies the requesting medical group/brigade MRO of the designated hospitals and, in turn, notifies the designated hospitals.

6-8. Intertheater Medical Regulating

a. The patients who are evacuated to EAC are treated there and then further evacuated to the support base. The attending physicians or oral and maxillofacial surgeons at the hospital notify the PAD. The PAD then consolidates these requests and forwards them to the MRO at the medical group/brigade.

This MRO forwards the consolidated request to the MEDCOM MRO who, in turn, consolidates and forwards a request to the TPMRC (if established).

b. Upon request of the TPMRC for authority to evacuate patients to the support base, the GPMRC directs the distribution of these patients into hospitals throughout the CONUS; advises the TPMRC of the destination hospital; and provides the authority for such movement. As a rule, the destination hospitals are military facilities. Civilian national disaster medical system member hospitals and other federal hospitals may also receive patients. The VA hospitals, for example, may receive patients who are expected to be discharged from service. The GPMRC validates the TPMRC patient movement requirements and, if moving by air, tasks the TACC to plan, schedule, and execute the intertheater evacuation.

c. When the TPMRC receives the authorization to move patients, it notifies the MEDCOM MRO of destination hospitals in CONUS. The MEDCOM MRO coordinates with the JMTB to arrange movement of CONUS-bound patients. The MEDCOM MRO then authorizes the movement to ASFs/ASTSs that are located on or near air bases or airstrips capable of handling long-range aircraft. Transportation is arranged, within Army channels, to move patients from the hospitals to the staging facilities. The medical brigade, in coordination with the AELT, then notifies the subordinate GHs of the flight schedule and the evacuation arrangements for movement to strategic airheads. At strategic airheads, there is an established ASF/ASTS. When the patients are delivered to the USAF, the responsibility for those patients is transferred from the Army hospital to the TAES. Upon arrival in CONUS further movement is the responsibility of the GPMRC.

d. All patients may not be able to be moved by air from the theater to CONUS. In that event, the MSC is used to move them by surface means. The movement authority also comes from the GPMRC or MEDCOM MRO which has arranged with the Navy Service Component Command (NSCC) for the movement of patients by hospital ships. When the patients are moved by ships, the MEDCOM has to provide holding facilities at the port (collocating an ASMC can provide this support). Patients are delivered to these holding facilities and held there until loaded aboard the ships.

6-9. Mobile Aeromedical Staging Facility

a. The MASF is a 39-person, mobile, tented, temporary staging facility deployed to provide supportive patient care and administration. Each MASF is capable of routinely holding and processing 50 patients at any given time and is not intended to hold patients overnight or for an extended period.

b. This theater system is used to evacuate patients from—

- United States Air Force operational locations within the CZ to hospital facilities outside the CZ.

- Airhead or airborne objective areas where airborne operations include USAF forward logistics support.

c. Bases used for aeromedical staging are designated by the Director of Aeromedical Evacuation Forces (DIRAEFOR). The MASFs—

- Provide supportive medical care when not augmented by CCAT teams. (When augmented by CCAT teams, continued stabilization of patients can be accomplished. Aeromedical evacuation crews and CCAT teams fly airlift missions to provide in-flight patient care.)

- Confirm sending facility has prepared patients for evacuation.

- In coordination with the OMF, ensure patient evacuation manifests are completed. (If the OMF is an Echelon II facility [such as an FSMC augmented with an FST], the forms required to complete the manifest may not be available and the MASF will be required to complete the appropriate forms.)

- Identify patient baggage tags.

d. Upon deployment, the OMF provides an adequate quantity of medications for patients transit time to the regulated destinations.

e. The MASF staff also establishes liaison with the OMF. The AELT is composed of two air evacuation liaison officers, a flight nurse, and three communications specialists. The team provides the initial interface between the user service and the TAES. The AELT is located at any level of the combat forces' joint medical regulating chain that is required to ensure a smooth patient flow into the TAES.

6-10. Limitations of the United States Air Force Theater Aeromedical Evacuation System

There are a number of limitations that are inherent in the current system. These include the following:

a. Absence of BW and CW agent decontamination ability.

b. The MASF cannot hold patients in excess of 6 hours.

c. The MASF does not have the capability to provide patient meals.

d. The AECC ensures the initial 30-days medical resupply package arrives at the MASF. The MASF/AELT/AEOT rely on the user service for all other logistical support.

e. It is the Army's responsibility to provide food and other logistical support required including moving patients back to Army facilities should USAF AE support be delayed.

6-11. Originating Medical Facility's Responsibilities

Once the authorization to move the patient has been given, the OMF must complete the following administrative procedures prior to entering the patient into the TAES:

a. The patient's baggage tag, patient evacuation manifest, and patient evacuation tag are the specified evacuation forms for all Services and are completed as required by triservice regulation. (Refer to Appendix H for instructions on completing these forms.)

NOTE

If the OMF is an Echelon II facility (such as the FSMC or MSMC), the forms may not be available; in which case, the forms will need to be completed by the MASF.

b. All of the patient's medical records must be collected together and packaged. The dental records are forwarded separately in the event they are needed for identification.

c. At the appropriate time, the OMF provides transportation to the MASF and assists in the off-load.

d. The OMF must provide the necessary medications, medical supplies, and equipment to support the patients' travel time to the regulated destination.

e. Any requirements for armed guards must be met by the echelon commander.

NOTE

Medical units do not provide guards for prisoners or EPWs in their care. When guards are required, they are provided by the echelon commander. The OMF will coordinate for this support when needed.

f. A limited amount of personal baggage is authorized if each piece is properly tagged and delivered to the MASF with the patient. Patients will always be evacuated with NBC-protective equipment, less the protective overgarment.

g. Each patient must be clearly identified with a wristband or equivalent identification and properly classified as to his medical condition.

h. The OMF must ensure that each patient is properly briefed and prepared for his evacuation prior to his arrival at the MASF.

6-12. Medical Regulating for Army Special Operations Forces

a. As in medical evacuation, the medical regulating plan must be integrated with the ARSOF operational and logistic plan. Maximum use of opportune (operational and logistics) aircraft and command and logistics communications nets must be coordinated to expedite mission requests and ensure success.

b. The ARSOF medical planner must constantly coordinate with the battalion or group operations and logistics sections to obtain up-to-date information of opportune transportation assets to be used for evacuation. In a deep operation, or when the theater is not sufficiently developed to allow the TAES to be used effectively, the primary means of air evacuation will be those Special Operations Aviation (SOA) or USAF SOF airframes conducting the clandestine mission. It is essential that coordination is made through the theater special operations command (SOC) or the highest C2 element for flight medics or pararescuemen (PJs) to accompany the flight when backhauling the casualties. Otherwise, a medic from the SOF unit being supported may have to accompany the patient, leaving the mission without proper medical support, or the casualty may have to be transported without en route care.

c. For all other special operations, the supporting medical evacuation unit provides air and ground ambulances in accordance with standard doctrinal procedures. United States Air Force MASFs or AELTs may be collocated at SOF support bases, or C2 bases, particularly during contingency operations where the build-up phase allows for pre-positioning of assets.

d. During sustained special operations missions, the theater SOC cannot afford to lose the services of ARSOF soldiers who become casualties, but who can be treated and returned to duty at hospitals within the EAC. As an exception to the theater evacuation policy, the Commander in Chief (CINC) retains these soldiers in the theater where they can be returned to their units for limited duty. There they can assume the support duties performed by other ARSOF soldiers, freeing the latter for operational duties.

CHAPTER 7

EVACUATION REQUEST PROCEDURES

7-1. General

Procedures for requesting medical evacuation support must be institutionalized down to the unit level. Procedural guidance and standardization of request procedures are provided in this chapter. *The same format used to request aeromedical evacuation is also used for requesting ground evacuation.*

7-2. Unit Evacuation Plan

Before initiating any operation, a unit must have an evacuation plan in effect. The plan may be a standard TSOP or it may be designed for a particular operation. It can be published in various ways depending on the level of headquarters and the amount of detail required. For example, it may be in the form of verbal instructions at the squad or platoon level, a comment in the signal operation instructions (SOI), or a paragraph in the unit OPORD. The unit evacuation plan is essential to requesting evacuation because it identifies—

- Primary and alternate channels to be used in submitting the medical evacuation request.
- Primary and alternate evacuation routes to be used.
- Means of evacuation (type of transport such as litter, ground ambulance, or air ambulance) to be used.
- Location of the destination MTF, if predesignated.

This paragraph implements STANAGs 2087 and 3204, QSTAG 529, and Air STDs 44/36A and 61/71.

7-3. Determination to Request Medical Evacuation and Assignment of Medical Evacuation Precedence

The determination to request medical evacuation and assignment of a precedence is made by the senior military person present. This decision is based on the advice of the senior medical person at the scene, the patient's condition, and the tactical situation. Assignment of a medical evacuation precedence is necessary. The precedence provides the supporting medical unit and controlling headquarters with information that is used in determining priorities for committing their evacuation assets. For this reason, correct assignment of a precedence cannot be overemphasized; *overclassification remains a continuing problem*. Patients will be picked up as soon as possible, consistent with available resources and pending missions. The following are categories of precedence and the criteria used in their assignment:

a. *Priority I—URGENT* is assigned to emergency cases that should be evacuated as soon as possible and within a maximum of 2 hours in order to save life, limb, or eyesight, to prevent complications of serious illness, or to avoid permanent disability.

b. *Priority IA—URGENT-SURG* is assigned to patients who must receive far forward surgical intervention to save life and to stabilize them for further evacuation.

c. *Priority II—PRIORITY* is assigned to sick and wounded personnel requiring prompt medical care. This precedence is used when the individual should be evacuated within 4 hours or his medical condition could deteriorate to such a degree that he will become an URGENT precedence, or whose requirements for special treatment are not available locally, or who will suffer unnecessary pain or disability.

d. *Priority III—ROUTINE* is assigned to sick and wounded personnel requiring evacuation but whose condition is not expected to deteriorate significantly. The sick and wounded in this category should be evacuated within 24 hours.

e. *Priority IV—CONVENIENCE* is assigned to patients for whom evacuation by medical vehicle is a matter of medical convenience rather than necessity.

NOTE

The NATO STANAG 3204 has deleted the category of Priority IV—CONVENIENCE; however, it will still be included in the US Army evacuation priorities as there is a requirement for it on the battlefield.

7-4. Unit Responsibilities in Evacuation

A decision to request medical evacuation places certain responsibilities on the requesting unit in the overall evacuation effort. To prepare for and assist during evacuation, the unit must—

a. Ensure that the tactical situation permits successful evacuation.

b. Have an English-speaking representative at the pickup site when evacuation is requested for non-US personnel.

c. Ensure that patients are ready for pickup when the request is submitted and provide patient information, as required.

d. Receive backhauled medical supplies and report the type, quantity, and where they are delivered.

e. Move patients to the safest aircraft approach and departure point or AXP if they are to be evacuated by air. Ensure that ground personnel are familiar with the principles of helicopter operations. The ground crew—

- Selects and prepares the landing site.
- Loads and unloads the helicopter according to the pilot's instructions.
- Briefs the pilot on the position of enemy troops and directs him to other units in the area, if asked.
- Guides the helicopter using hand signals during landing and takeoff when the tactical situation permits.
- Marks friendly positions when armed helicopter escort is provided.

7-5. Types of Medical Evacuation Request Formats and Procedures

a. The medical evacuation request is used for requesting evacuation support for both air and ground ambulances.

b. There are two established medical evacuation formats and procedures—one for wartime use and one used in peacetime.

c. Several differences exist between the wartime and the peacetime medical evacuation request formats and procedures. The wartime request format is shown in Table 7-1. The peacetime request form differs in two line item areas.

(1) Line 6—changed to number and type of wound, injury, or illness (two gunshot wounds and one compound fracture). If serious bleeding is reported, the patient's blood type should be given, if known.

(2) Line 9—changed to description of terrain (flat, open, sloping, wooded). If possible, include relationship of landing area to prominent terrain features.

d. Security is another basic difference between wartime and peacetime requesting procedures. Under all nonwar conditions, the safety of US military and civilian personnel outweighs the need for security, and clear text transmissions of medical evacuation requests are authorized. During wartime, the rapid evacuation of patients must be weighed against the importance of unit survivability. Accordingly, wartime medical evacuation requests are transmitted by secure means only.

e. A medical evacuation request and mission completion record format is provided in Appendix I.

7-6. Collection of Medical Evacuation Information

The medical evacuation information collected for the wartime medical evacuation request, line numbers 3 through 9, is subject to brevity codes. This information is limited to the specific remarks provided in

Table 7-1 (Page 7-7). For example: The information to be collected for Line 4 pertains to special equipment to be placed on board the evacuation vehicle or aircraft. The limiting remarks restrict identification to none required, hoist, extraction equipment, and ventilator. No other remarks are authorized for Line 4.

7-7. Preparation of the Medical Evacuation Request

Table 7-1 provides the procedures for preparation of the medical evacuation request, to include information requirements and sources.

a. During wartime, brevity codes must be used in preparing all medical evacuation requests. The authorized codes are provided in Table 7-1; they are also provided in the SOI. Use of locally devised brevity codes is not authorized. If the unit preparing the request does not have access to secure communications, the medical evacuation request must be prepared in encrypted form. Encrypting is required for all information on the request with the exception of—

(1) The medical evacuation line number identifier. This information is always transmitted in clear text.

(2) The call sign and suffix (Line 2) which can be transmitted in clear text.

b. During peacetime, two line number items (Lines 6 and 9) will change. Details for the collection of information and request preparation are shown in Table 7-1. More detailed procedures for use of the peacetime request format must be developed by each local command to meet specific requirements.

7-8. Transmission of the Request

The medical evacuation request should be made by the most direct communications means to the medical unit that controls evacuation assets. The communications means and channels used depend on the situation (organization, communication means available, location on the battlefield, and distance between units). The primary and alternate channels to be used are specified in the unit evacuation plan.

a. *Secure Transmissions*. Under all wartime conditions, these requests are transmitted by *SECURE MEANS* only. Therefore, the use of nonsecure communications dictates that the request be transmitted in *ENCRYPTED FORM*. Regardless of the type (secure or nonsecure) of communications equipment used in transmission, it is necessary to—

- Make proper contact with the intended receiver.
- Use the effective call sign and frequency assignments from the SOI.
- Use the proper radio procedure.

- Ensure that transmission time is kept to a minimum (20 to 25 seconds maximum).
- Provide the opening statement: "I HAVE A MEDEVAC REQUEST."

b. Receiver Acknowledgment. After the appropriate opening statement is made, the transmitting operator breaks for acknowledgment. Authentication by the receiving or transmitting unit should be done in accordance with the TSOP.

c. Clear Text and Encrypted Transmissions. If secure communications equipment is used in transmission, the request will be transmitted in *CLEAR TEXT*. However, if the communications equipment used in transmission is not secure, the request must be transmitted in encrypted form with the exception of the following:

(1) The medical evacuation line number identifier (Line 1, Line 2, Line 3, and so forth). This information is always transmitted in clear text.

(2) The call sign and suffix (Line 2) which can be transmitted in clear text.

NOTE

When using DRYAD Numeral Cipher, the same "SET" line is used to encrypt both the grid zone letters and the coordinates (Line 1 of the request). To avoid misunderstanding, a statement should be made that the grid zone letters are included in the message. This must be accomplished unless the TSOP specifies that the DRYAD Numeral Cipher is to be used at all times.

(3) The automated net control device (ANCD) (AN/CYZ-10) is associated equipment for the SINCGARS radios. It is capable of receiving, storing, and transferring data to SINCGARS radios, and from the ANCD to other compatible communications-electronic equipment. The ANCD (AN/CYZ-10) is used primarily for handling COMSEC keys, frequency hopping, and SOI information. (For information concerning the operation of the ANCD [AN/CYZ-10], refer to Technical Manual [TM] 11-5820-890-10-8 .)

d. Letter and Numeral Pronunciation. The letters and numerals that make up the request are pronounced according to standard radio procedures. In transmission of the request, the medical evacuation request line number identifier will be given followed by the applicable evacuation information (example: Line One. TANGO PAPA FOUR SIX FIVE THREE SEVEN NINER).

e. Medical Evacuation Request Line Numbers 1 through 5. The medical evacuation request line numbers 1 through 5 must always be transmitted first. The information enables the evacuation unit to begin the mission and avoids unnecessary delay if the remaining information is not immediately available. The information for Lines 6 through 9 should be transmitted as soon as it is available.

f. Monitoring Requirement. After transmission and acknowledgment are accomplished, the transmitting operator must monitor the frequency (Line 2 of the request) to wait for additional instructions or contact from the evacuation vehicle.

7-9. Relaying Requests

If the unit receiving the request does not control the evacuation means, it must relay the request to the headquarters or unit that has control, or to another relaying unit. When the relaying unit does not have access to secure communications equipment, the request must be transmitted in encrypted form. The method of transmission and specific units involved depends on the situation. Regardless of the method of transmission, the unit relaying the request must ensure that it relays the exact information originally received and that it is transmitted by secure means only. The radio call sign and frequency relayed (Line 2 of the request) should be that of the requesting unit and not that of the relaying unit. If possible, intermediate headquarters or units relaying requests will monitor the frequency specified in Line 2. This is necessary in the event contact is not established by the medical evacuation unit, vehicle, or aircraft with the requesting unit.

Table 7-1. Procedures for Information Collection and Medical Evacuation Request Preparation

LINE	ITEM	EXPLANATION	WHERE/HOW OBTAINED	WHO NORMALLY PROVIDES	REASON
1	Location of Pickup Site	Encrypt the grid coordinates of the pickup site. When using the DRYAD Numeral Cipher, the same "SET" line will be used to encrypt the grid zone letters and the coordinates. To preclude misunderstanding, a statement is made that grid zone letters are included in the message (unless unit SOP specifies its use at all times).	From Map	Unit Leader(s)	Required so evacuation vehicle knows where to pickup patient. Also, so that the unit coordinating the evacuation mission can plan the route for the evacuation vehicle (if the evacuation vehicle must pick up from more than one location).
2	Radio Frequency, Call Sign, and Suffix	Encrypt the frequency of the radio at the pickup site, not a relay frequency. The call sign (and suffix if used) of person to be contacted at the pickup site may be transmitted in the clear.	From SOI	RTO	Required so that evacuation vehicle can contact requesting unit while en route (obtain additional information or change in situation or directions).
3	Number of Patients by Precedence	Report only applicable information and encrypt the brevity codes. A—URGENT B—URGENT-SURG C—PRIORITY D—ROUTINE E—CONVENIENCE If two or more categories must be reported in the same re-quest, insert the word "BREAK" between each category.	From Evaluation of Patient(s)	Medic or Senior Person Present	Required by unit controlling the evacuation vehicles to assist in prioritizing missions.
4	Special Equipment Required	Encrypt the applicable brevity codes. A—None B—Hoist C—Extraction equipment D—Ventilator	From Evaluation of Patient/ Situation	Medic or Senior Person Present	Required so that the equipment can be placed on board the evacuation vehicle prior to the start of the mission.

Table 7-1. Procedures for Information Collection and Medical Evacuation Request Preparation (Continued)

LINE	ITEM	EXPLANATION	WHERE/HOW OBTAINED	WHO NORMALLY PROVIDES	REASON
5	Number of Patients by Type	Report only applicable information and encrypt the brevity code. If requesting MEDEVAC for both types, insert the word "BREAK" between the litter entry and ambulatory entry. L + # of PNT – Litter A + # of PNT – Ambulatory (sitting)	From Evaluation of Patient(s)	Medic or Senior Person Present	Required so that the appropriate number of evacuation vehicles may be dispatched to the pickup site. They should be configured to carry the patients requiring evacuation.
6	Security of Pickup Site (Wartime)	N—No enemy troops in area. P—Possibly enemy troops in area (approach with caution). E—Enemy troops in area (approach with caution). X—Enemy troops in area (armed escort required).	From Evaluation of Situation	Unit Leader	Required to assist the evacuation crew in assessing the situation and determining if assistance is required. More definitive guidance can be furnished the evacuation vehicle while it is en route (specific location of enemy to assist an aircraft in planning its approach).
6	Number and Type of Wound, Injury, or Illness (Peacetime)	Specific information regarding patient wounds by type (gunshot or shrapnel). Report serious bleeding, along with patient blood type, if known.	From Evaluation of Patient	Medic or Senior Person Present	Required to assist evacuation personnel in determining treatment and special equipment needed.
7	Method of Marking Pickup Site	Encrypt the brevity codes. A—Panels B—Pyrotechnic signal C—Smoke signal D—None E—Other	Based on Situation and Availability of Materials	Medic or Senior Person Present	Required to assist the evacuation crew in identifying the specific location of the pick up. Note that the color of the panels or smoke should not be transmitted until the evacuation vehicle contacts the unit (just prior to its arrival). For security, the crew should identify the color and the unit verify it.

Table 7-1. Procedures for Information Collection and Medical Evacuation Request Preparation (Continued)

LINE	ITEM	EXPLANATION	WHERE/HOW OBTAINED	WHO NORMALLY PROVIDES	REASON
8	Patient Nationality and Status	The number of patients in each category need not be transmitted. Encrypt only the applicable brevity codes. A—US military B—US civilian C—Non-US military D—Non-US civilian E—EPW	From Evaluation of Patient	Medic or Senior Person Present	Required to assist in planning for destination facilities and need for guards. Unit requesting support should ensure that there is an English-speaking representative at the pickup site.
9	NBC Contamination (Wartime)	Include this line only when applicable. Encrypt the applicable brevity codes. N—Nuclear B—Biological C—Chemical	From Situation	Medic or Senior Person Present	Required to assist in planning for the mission. (Determine which evacuation vehicle will accomplish the mission and when it will be accomplished.)
9	Terrain Description (Peacetime)	Includes details of terrain features in and around proposed landing site. If possible, describe relationship of site to prominent terrain feature (lake, mountain, tower).	From Area Survey	Personnel at Site	Required to allow evacuation personnel to assess route/avenue of approach into area. Of particular importance if hoist operation is required.

CHAPTER 8

MANUAL EVACUATION

8-1. General

Manual evacuation is the process of transporting casualties by manual carries. It is accomplished without the aid of a litter or other forms of transport. It is intended to end at the point where a more sophisticated means of evacuation becomes available. For example, manual evacuation ends when a litter, vehicle, or other form of conveyance is available.

8-2. Casualty Handling

a. Casualties evacuated by manual means must be carefully handled. Rough or improper handling may cause further injury to the casualty. The evacuation effort should be organized and performed methodically. Each movement made in lifting or moving casualties should be performed as deliberately and as gently as possible. Casualties should not be moved before the type and extent of their injuries are evaluated and the required first aid (self-aid, buddy aid, or combat lifesaver) or EMT (combat medic or ambulance crew) is administered.

NOTE

The exception to this occurs when the situation dictates immediate movement for safety reasons. For example, if a casualty is on the ground near a burning vehicle, it may be necessary to move him a safe distance away from the vehicle. This situation dictates that the urgency of casualty movement outweighs the need to administer first aid or EMT. Even when immediate movement of casualties is required, they should be moved only far enough to be out of danger.

b. Many lifesaving and life-preserving measures are carried out before evacuating injured or wounded soldiers. Except in extreme emergencies, the type and extent of injuries must be evaluated before any movement of the casualty is attempted. Measures are taken, as needed, to—

- Open the airway and restore breathing and heartbeat.
- Stop bleeding.
- Prevent or control shock.
- Protect the wound from further contamination.

c. When a fracture is evident or suspected, the injured part must be immobilized. Every precaution must be taken to prevent broken ends of bone from cutting through muscle, blood vessels, nerves, and skin.

d. When a casualty has a serious wound, the dressing over the wound should be reinforced to provide additional protection during manual evacuation.

8-3. General Rules for Bearers

a. In manual evacuation, individuals performing the evacuation are referred to as bearers. Improper handling of a casualty can result in injury to the bearers as well as to the casualty. To minimize disabling injuries (muscle strain, sprains, or other injuries) that could hamper the evacuation effort, the following rules should be followed:

- Use the body's natural system of levers when lifting and moving a casualty.
- Know your physical capabilities and limitations.
- Maintain solid footing when lifting and transporting a casualty.
- Use the leg muscles (not the back muscles) when lifting or lowering a casualty.
- Use the shoulder and leg muscles (not the back muscles) when carrying or standing with a casualty.
- Keep the back straight; use arms and shoulders when pulling a casualty.
- Work in unison with other bearers, using deliberate, gradual movements.
- Slide or roll, rather than lift, heavy objects that must be moved.
- Rest frequently, or whenever possible, while transporting a casualty.

b. Normally, a casualty's individual weapon is not moved through the evacuation chain with him. Weapons are turned in at the first available MTF (BAS or division clearing station) to be returned to the parent unit through supply channels. Individual equipment, to include protective clothing and mask, remains with the casualty and is evacuated with him.

8-4. Manual Carries

Manual carriers are tiring for the bearers and involve the risk of increasing the severity of the casualty's injuries. In some instances, however, they are essential to save the casualty's life. When a litter is not available or when the terrain or the tactical situation makes other forms of casualty transport impractical, a manual carry may be the only means to transport a casualty to where a combat medic can treat him. The distance a casualty can be transported by a manual carry depends upon many factors, such as—

- Strength and endurance of the bearers.

- Weight of the casualty.
- Nature of the injuries.
- Obstacles encountered during transport.

8-5. Casualty Positioning

The first step in any manual carry is to position the casualty to be lifted. If he is conscious, he should be told how he is to be positioned and transported. This helps to lessen his fear of movement and to gain his cooperation. It may be necessary to roll the casualty onto his abdomen, or his back, depending upon the position in which he is lying and the particular carry to be used.

a. To roll a casualty onto his abdomen, kneel at the casualty's uninjured side.

(1) Place his arms above his head; cross his ankle which is farther from you over the one that is closer to you.

(2) Place one of your hands on the shoulder which is farther from you; place your other hand in the area of his hip or thigh.

(3) Roll him gently toward you onto his abdomen (Figure 8-1).

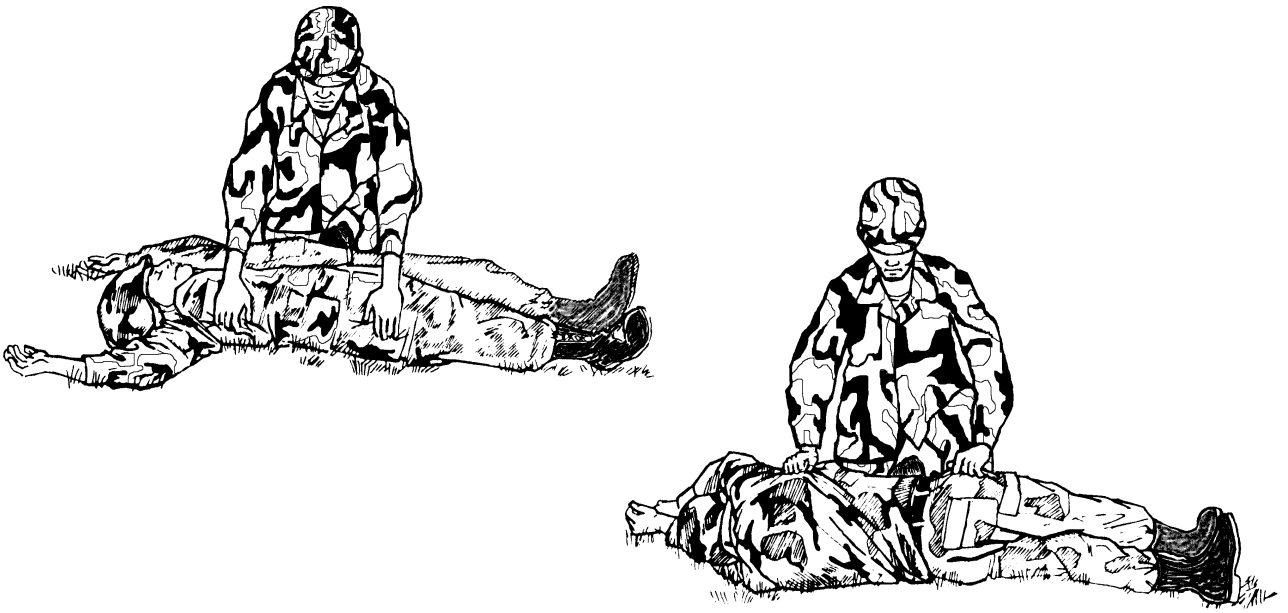

Figure 8-1. Positioning the casualty (on his abdomen).

b. To roll a casualty onto his back, follow the same procedure described in *a* above, except gently roll the casualty onto his back, rather than onto his abdomen (Figure 8-2).

Figure 8-2. Positioning the casualty on his back.

8-6. Categories of Manual Carries

a. *One-Man Carries*. These carries should be used when only one bearer is available to transport the casualty.

(1) The *fireman's carry* (Figure 8-3) is one of the easiest ways for one individual to carry another. After an unconscious or disabled casualty has been properly positioned (Figure 8-1), he is raised from the ground, then supported and placed in the carrying position.

(*a*) After rolling the casualty onto his abdomen, straddle him. Extend your hands under his chest and lock them together.

(*b*) Lift the patient to his knees as you move backward

(*c*) Continue to move backward, thus straightening the casualty's legs and locking his knees.

(*d*) Walk forward, bringing the casualty to a standing position; tilt him slightly backward to prevent his knees from bucking.

(*e*) As you maintain constant support of the casualty with one arm, free your other arm, quickly grasp his wrist, and raise his arm high. Instantly pass your head under his raised arm, releasing it as you pass under it.

(*f*) Move swiftly to face the casualty and secure your arms around his waist. Immediately place your foot between his feet and spread them apart (approximately 6 to 8 inches).

(*g*) Grasp the casualty's wrist and raise his arm high over your head.

(*h*) Bend down and pull the casualty's arm over and down on your shoulder, bringing his body across your shoulders. At the same time, pass your arm between his legs.

(*i*) Grasp the casualty's wrist with one hand, and place your other hand on your knee for support.

(*j*) Rise with the casualty positioned correctly. Your other hand is free for use.

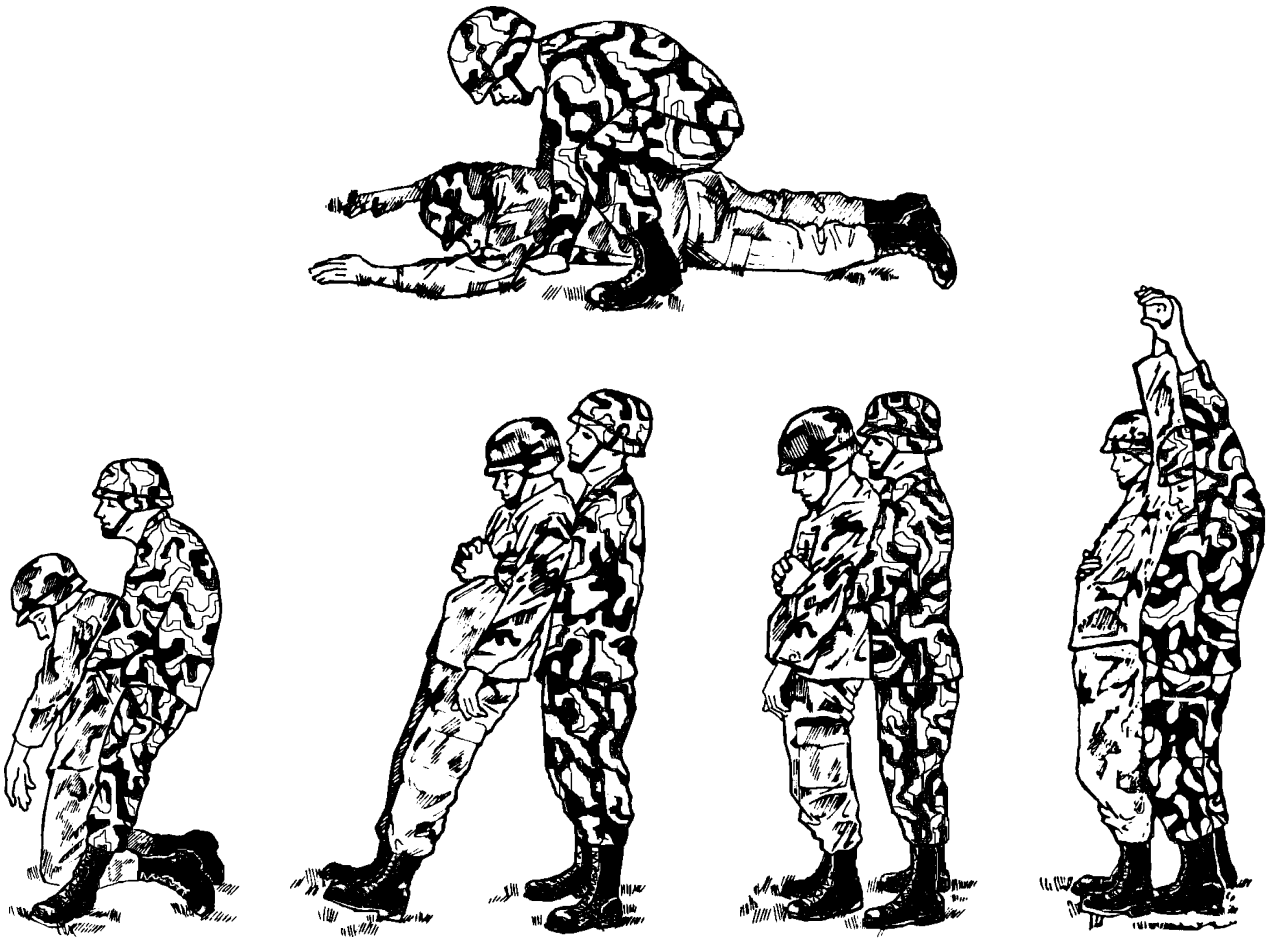

Figure 8-3. Fireman's carry.

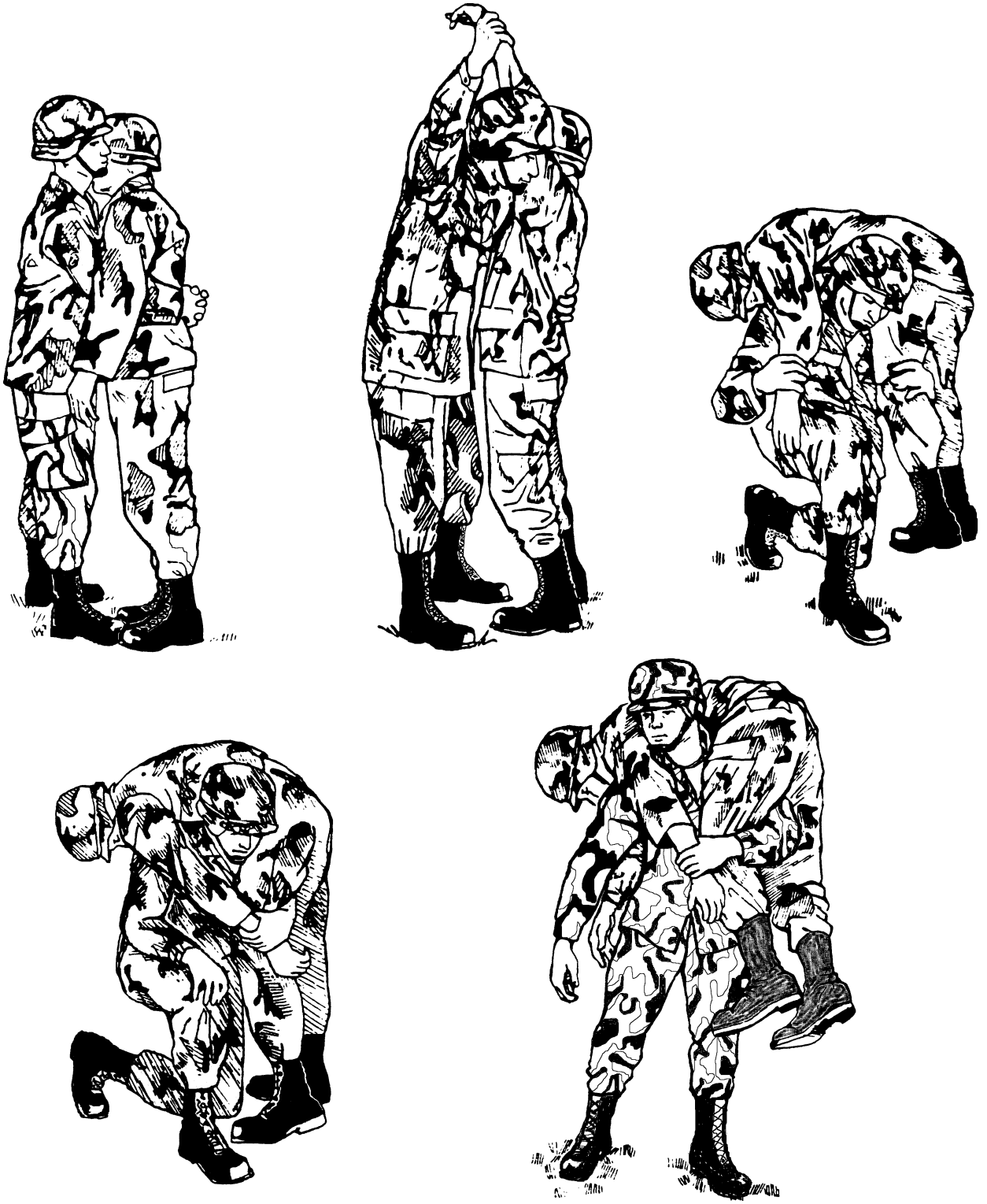

Figure 8-3. Fireman's carry (continued).

(2) The alternate method of the *fireman's carry* for raising a casualty from the ground is illustrated in Figure 8-4; however, it should be used only when the bearer believes it to be safer for the casualty because of the location of his wounds. When the alternate method is used, care must be taken to prevent the casualty's head from snapping back and causing a neck injury. The steps for raising a casualty from the ground for the fireman's carry are also used in other one-man carries.

(*a*) Kneel on one knee at the casualty's head and face his feet. Extend your hands under his armpits, down his sides, and across his back.

(*b*) As you rise, lift the casualty to his knees. Then secure a lower hold and raise him to a standing position with his knees locked.

(3) In the *supporting carry* (Figure 8-5), the casualty must be able to walk, or at least hop, on one leg, using the bearer as a crutch. This carry can be used to transport a casualty as far as he is able to walk or hop.

(*a*) Raise the casualty from the ground to a standing position by using the fireman's carry.

Figure 8-4. Fireman's carry (*alternate method for lifting the patient to a standing position*).

(*b*) Grasp the casualty's wrist and draw his arm around your neck.

(*c*) Place your arm around his wrist. The casualty is now able to walk or hop, using you as a support.

(4) The *arms carry* (Figure 8-6) is useful in carrying a casualty for a short distance (up to 50 meters) and for placing a casualty on a litter.

(*a*) Raise or lift the casualty from the ground to a standing position, as in the fireman's carry.

(*b*) Place one arm under the casualty's knees and your other arm around his back.

(*c*) Lift the casualty.

(*d*) Carry the casualty high to lessen fatigue.

Figure 8-5. Supporting carry.

Figure 8-6. Arms carry.

(5) Only a conscious casualty can be transported by the *saddleback carry* (Figure 8-7) because he must be able to hold onto the bearer's neck. To use this technique—

(*a*) Raise the casualty to an upright position, as in the fireman's carry.

(*b*) Support the casualty by placing an arm around his waist. Move to the casualty's side. Have the casualty put his arm around your neck and move in front of him with your back to him.

(*c*) Have the casualty encircle his arms around your neck.

(*d*) Stoop, raise him on your back, and clasp your hands together beneath his thighs, if possible.

Figure 8-7. Saddleback carry.

(6) In the *pack-strap carry* (Figure 8-8), the casualty's weight rests high on your back. This makes it easier for you to carry the casualty a moderate distance (50 to 300 meters). To eliminate the possibility of injury to the casualty's arms, you must hold the casualty's arms in a palms-down position.

(*a*) Lift the casualty from the ground to a standing position, as in the fireman's carry.

(*b*) Support the casualty with your arms around him and grasp his wrist closer to you.

(*c*) Place his arm over your head and across your shoulders.

(*d*) Move in front of him while still supporting his weight against your back.

(*e*) Grasp his other wrist and place this arm over your shoulder.

(*f*) Bend forward and raise or hoist the casualty as high on your back as possible so that his weight is resting on your back.

NOTE

Once the casualty is positioned on the bearer's back, the bearer remains as erect as possible to prevent straining or injuring his back.

Figure 8-8. Pack-strap carry.

(7) The *pistol-belt carry* (Figure 8-9) is the best one-man carry for a long distance (over 300 meters). The casualty is securely supported upon your shoulders by a belt. Both your hands and the casualty's (if conscious) are free for carrying a weapon or equipment, or for climbing obstacles. With your hands free and the casualty secured in place, you are also able to creep through shrubs and under low-hanging branches.

(*a*) Link two pistol belts (or three, if necessary) together to form a sling. Place the sling under the casualty's thighs and lower back so that a loop extends from each side.

NOTE

If pistol belts are not available for use, other items such as rifle slings, two cravat bandages, two litter straps, or any other suitable material which will not cut or bind the casualty may be used.

(*b*) Lie face up between the casualty's outstretched legs. Thrust your arms through the loops and grasp his hands and trouser leg on his injured side.

(*c*) Roll toward the casualty's uninjured side onto your abdomen, bringing him onto your back. Adjust the sling, if necessary.

(*d*) Rise to a kneeling position. The belt holds the casualty in place.

(*e*) Place one hand on your knee for support and rise to an upright position. (The casualty is supported on your shoulders.)

(*f*) Carry the casualty with your hands free for use in rifle firing, climbing, or surmounting obstacles.

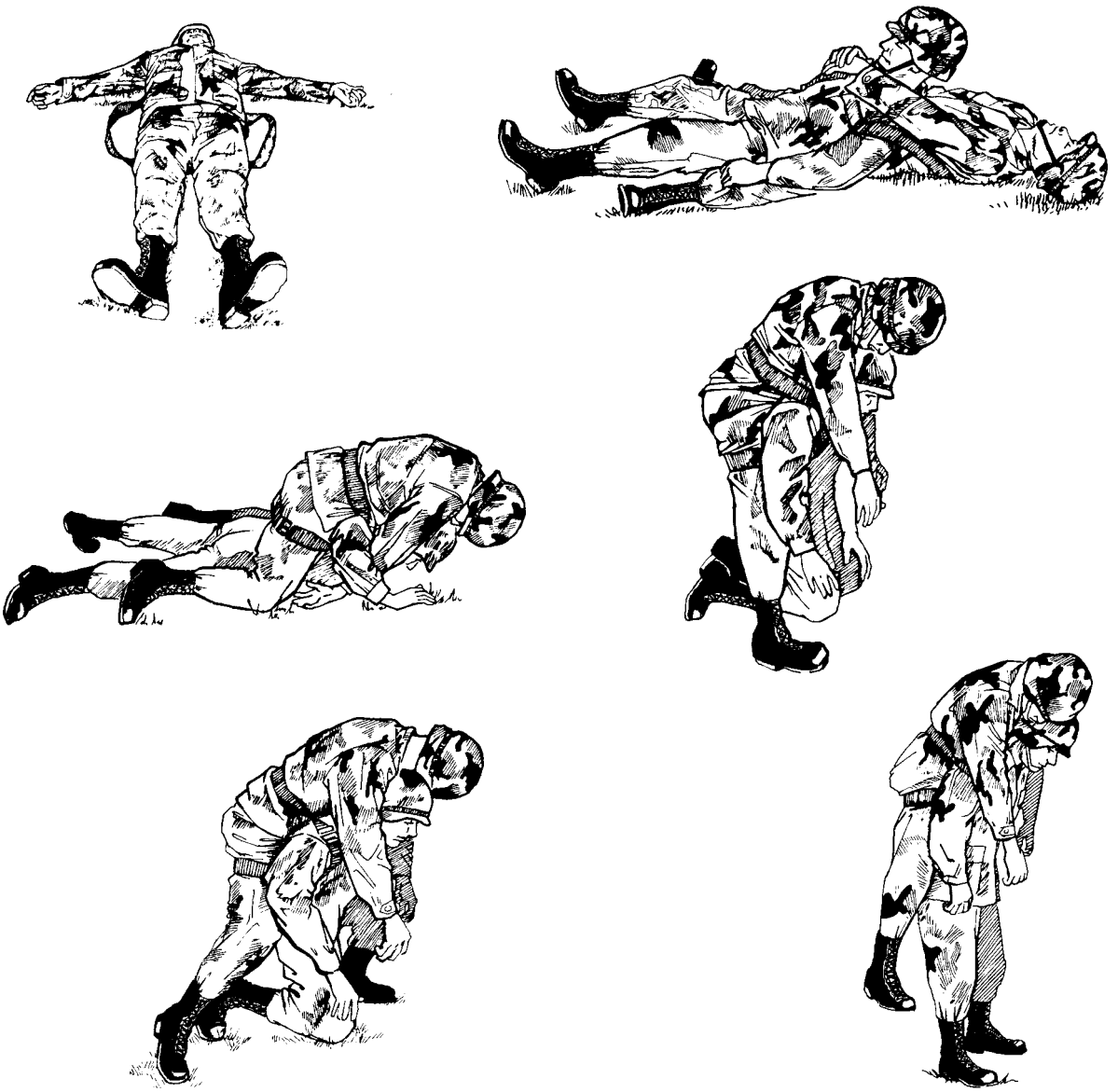

Figure 8-9. Pistol-belt carry.

(8) The *pistol-belt drag* (Figure 8-10), as well as other drags, is generally used for short distances (up to 50 meters). This drag is useful in combat, since both the bearer and the casualty can remain closer to the ground than in other drags.

(*a*) Extend two pistol belts or similar objects to their full length and join them together to make a continuous loop.

(*b*) Roll the casualty onto his back, as in the fireman's carry.

(*c*) Pass the loop over the casualty's head, and position it across his chest and under his armpits. Then cross the remaining portion of the loop, thus forming a figure eight.

(*d*) Lie on your side facing the casualty.

(*e*) Slip the loop over your head and turn onto your abdomen. This enables you to drag the casualty as you crawl.

(9) The *neck drag* (Figure 8-11) is useful in combat because the bearer can transport the casualty as he creeps behind a low wall or shrubbery, under a vehicle, or through a culvert. If the casualty is unconscious, his head must be protected from the ground. The neck drag cannot be used if the casualty has a broken arm.

NOTE

If the casualty is conscious, he may clasp his hands together around your neck.

(*a*) Tie the casualty's hands together at the wrists.

(*b*) Straddle the casualty in a kneeling face-to-face position.

(*c*) Loop the casualty's tied hands over and around your neck.

(*d*) Crawl forward dragging the casualty with you.

NOTE

If the casualty is unconscious, protect his head from the ground.

Figure 8-10. Pistol-belt drag.

Figure 8-11. Neck drag.

(10) The *cradle-drop drag* (Figure 8-12) is effective in moving a casualty up or down steps.

(*a*) Kneel at the casualty's head (with him lying on his back). Slide your hands, with palms up, under the casualty's shoulders and get a firm hold under his armpits.

(*b*) Rise (partially), supporting the casualty's head on one of your forearms. (You may bring your elbows together and let the casualty's head rest on both of your forearms.)

(*c*) Rise and drag the casualty backward. (The casualty is in a semisitting position.)

(*d*) Back down the steps, supporting the casualty's head and body and letting his hips and legs drop from step to step.

NOTE

If the casualty needs to be moved up the steps, you should back up the steps, using the same procedure.

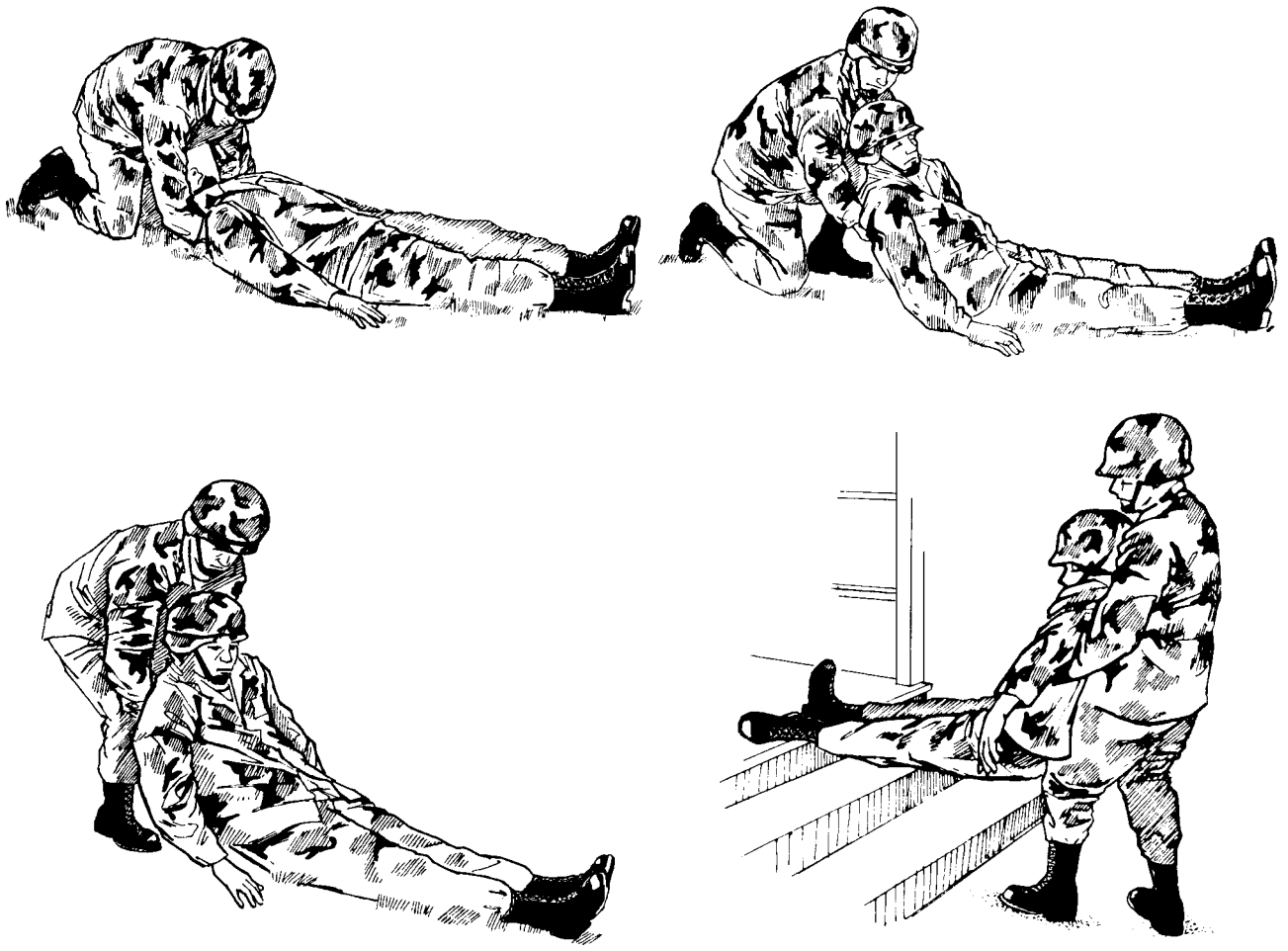

Figure 8-12. Cradle-drop drag.

(11) *The load-bearing equipment* (*LBE*) *carry using the bearer's LBE* can be used with a conscious casualty (Figure 8-13).

(*a*) Loosen all suspenders on your LBE.

(*b*) Have the casualty place one leg into the loop formed by your suspenders and pistol belt.

(*c*) Squat in front of the standing casualty. Have him place his other leg into the loop, also.

(*d*) Have the casualty place his arms over your shoulders, lean forward onto your back, and lock his hands together.

(*e*) Stand up and lean forward into a comfortable position.

(*f*) Continue mission.

Figure 8-13. LBE carry using bearer's LBE (*conscious casualty*).

Figure 8-13. LBE carry using bearer's LBE (conscious casualty) (continued).

(12) The *LBE carry using the bearer's LBE* can be used with an unconscious casualty or one who cannot stand (Figure 8-14).

(*a*) Position the casualty on the flat of his back.

(*b*) Remove your LBE and loosen all suspender straps.

(*c*) Lift the casualty's leg and place it through the loop formed by your suspenders and pistol belt. Then place the other leg. The LBE is moved up until the pistol belt is behind the casualty's thighs.

(*d*) Lay between the casualty's legs; work his arms through his LBE suspenders.

(*e*) Grasp the casualty's hand (on the injured side), and roll the casualty (on his uninjured side) onto his back.

(*f*) Rise to one knee and then push into a standing position.

(*g*) Bring the casualty's arms over your shoulders. Grasp his hands and secure them if the casualty in unconscious. If the casualty is conscious and he is able to assist, have him lock his hands in front of you.

(*h*) Lean forward into a comfortable position and continue the mission.

Figure 8-14. LBE carry using bearer's LBE
(*unconscious casualty or one that cannot stand*).

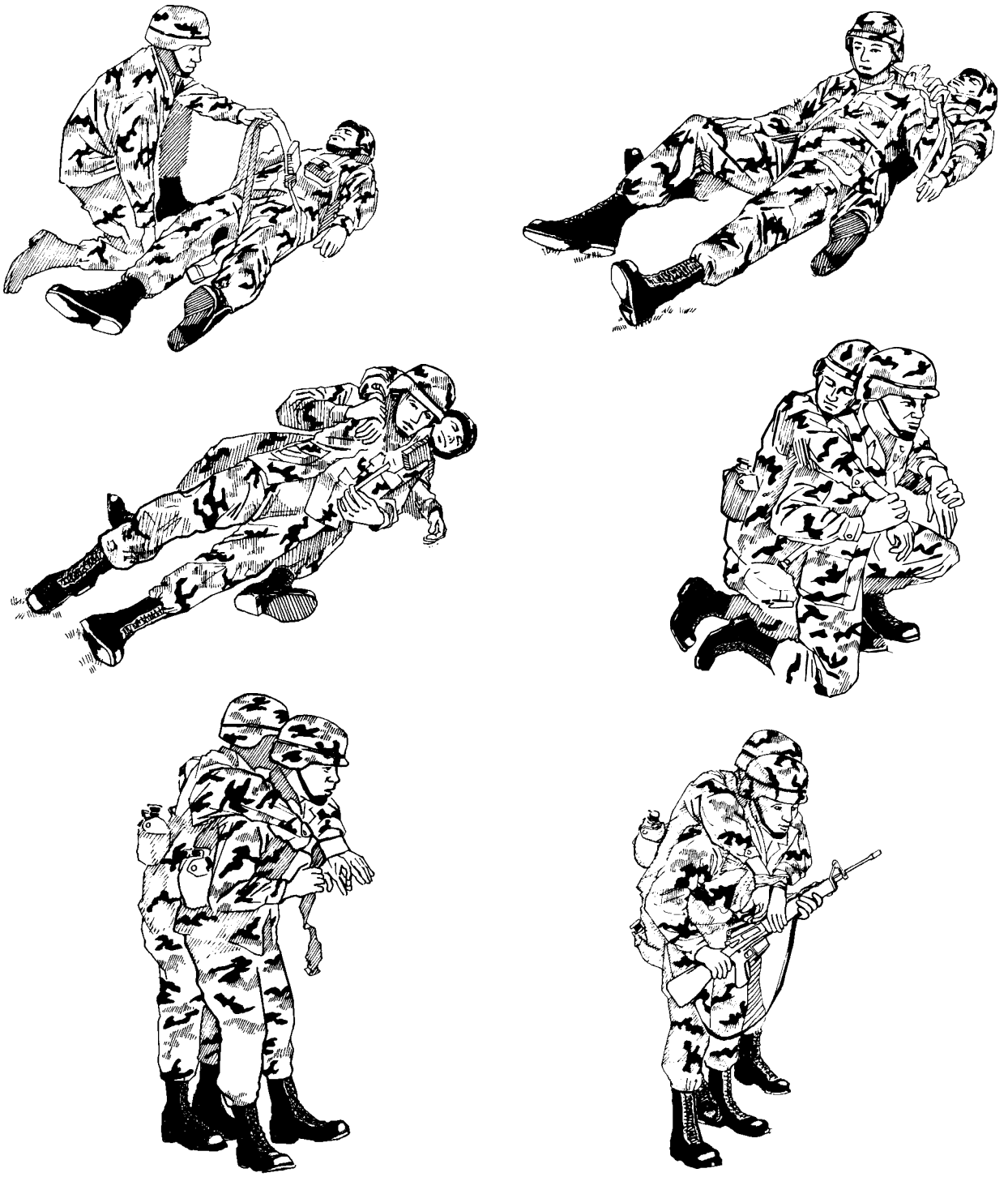

Figure 8-14. LBE carry using bearer's LBE (unconscious casualty or one that cannot stand) (continued).

(13) The *LBE carry using the casualty's LBE* (Figure 8-15) can be used with a conscious or unconscious casualty.

(*a*) Position the casualty on his back with his LBE on.

(*b*) Loosen the casualty's two front suspenders.

(*c*) Position yourself between the casualty's legs, and slip your arms into the casualty's two front suspenders (up to his shoulders).

(*d*) Work his arms out of his LBE suspenders.

(*e*) Grasp the casualty's hand (on the injured side), and roll him (on his uninjured side) onto his stomach.

(*f*) Rise to one knee, then into a standing position.

(*g*) Grasp the casualty's hands and secure them, if the casualty is unconscious. If he is conscious, have the casualty lock his hands in front of you.

(*h*) Lean forward into a comfortable position and continue the mission.

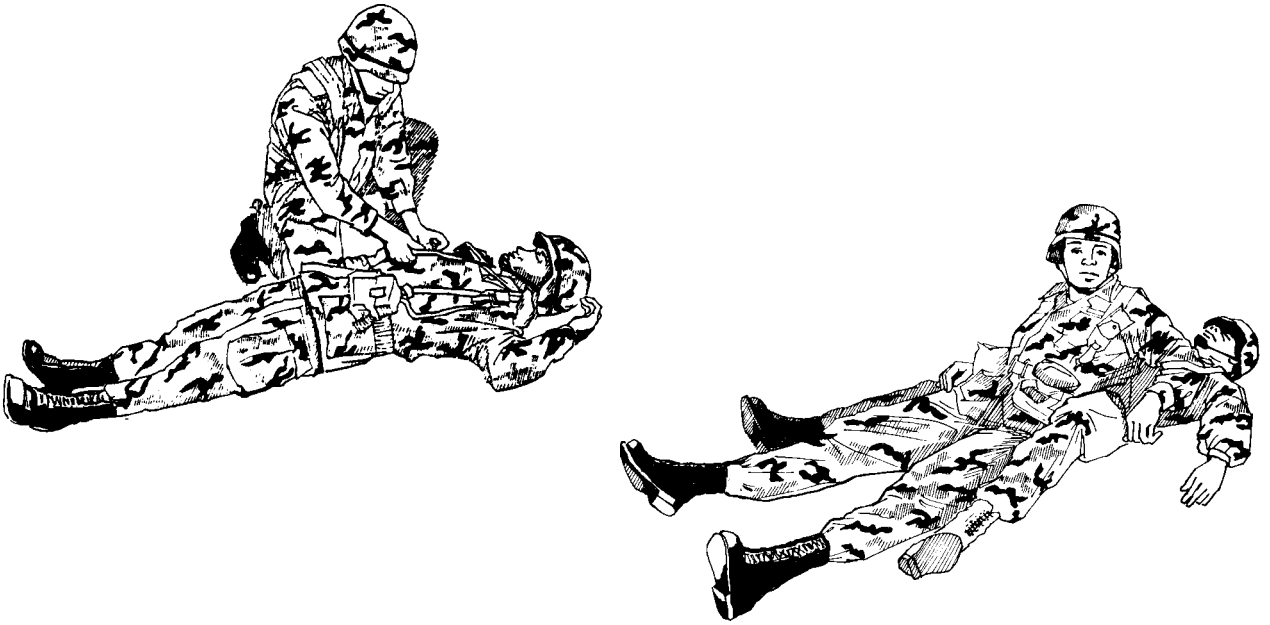

Figure 8-15. LBE carry using casualty's LBE.

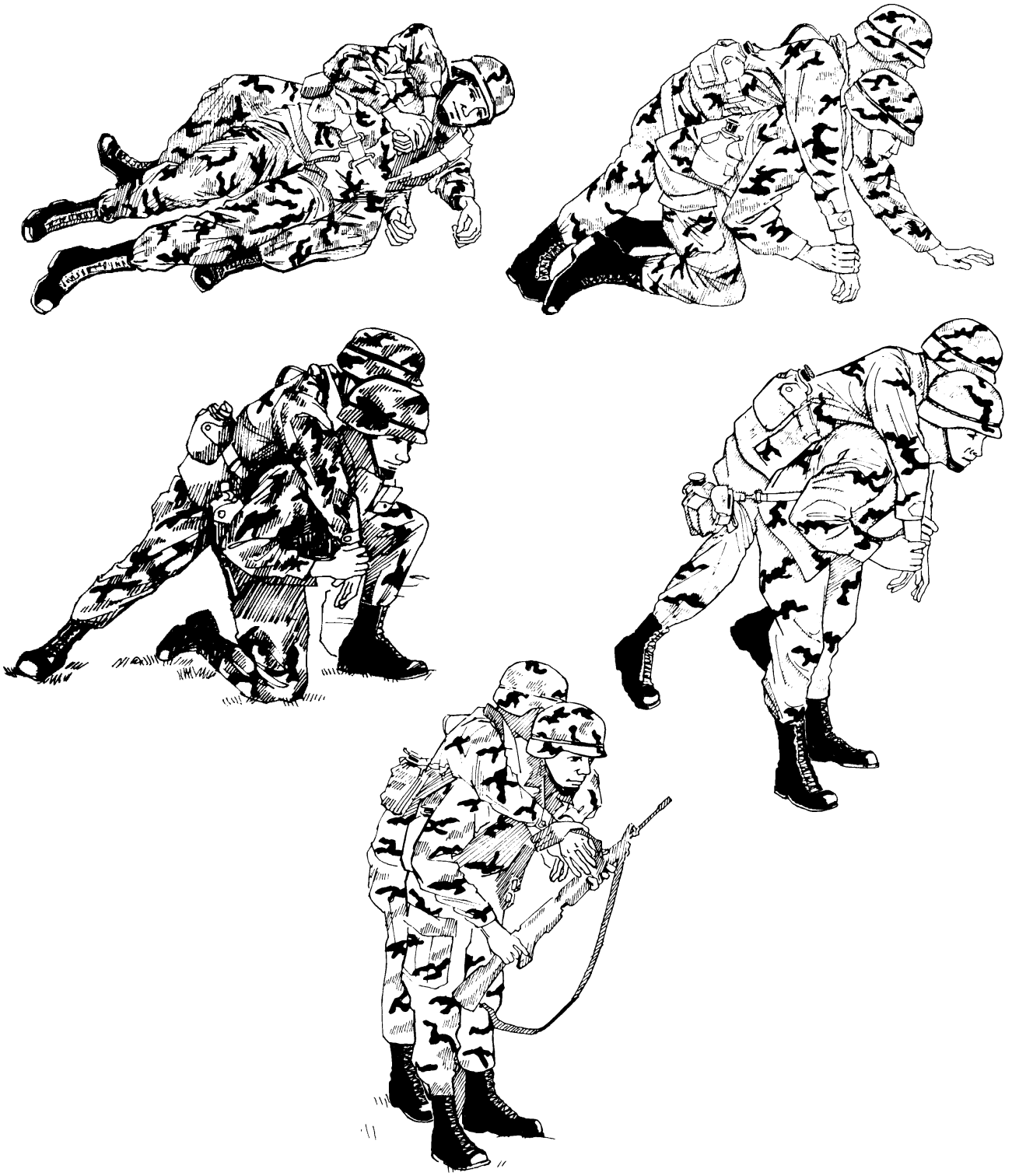

Figure 8-15. LBE carry using casualty's LBE (continued).

b. Two-Man Carries. These carries should be used whenever possible. They provide more comfort for the casualty, are less likely to aggravate injuries, and are less tiring for the bearers. Five different two-man carries can be used.

(1) The *two-man supporting carry* (Figure 8-16) can be used in transporting both conscious and unconscious casualties. If the casualty is taller than the bearers, it may be necessary for the bearers to lift the casualty's legs and let them rest on their forearms. The bearers—

(*a*) Help the casualty to his feet and support him with their arms around his waist.

(*b*) Grasp the casualty's wrists and draw his arms around their necks.

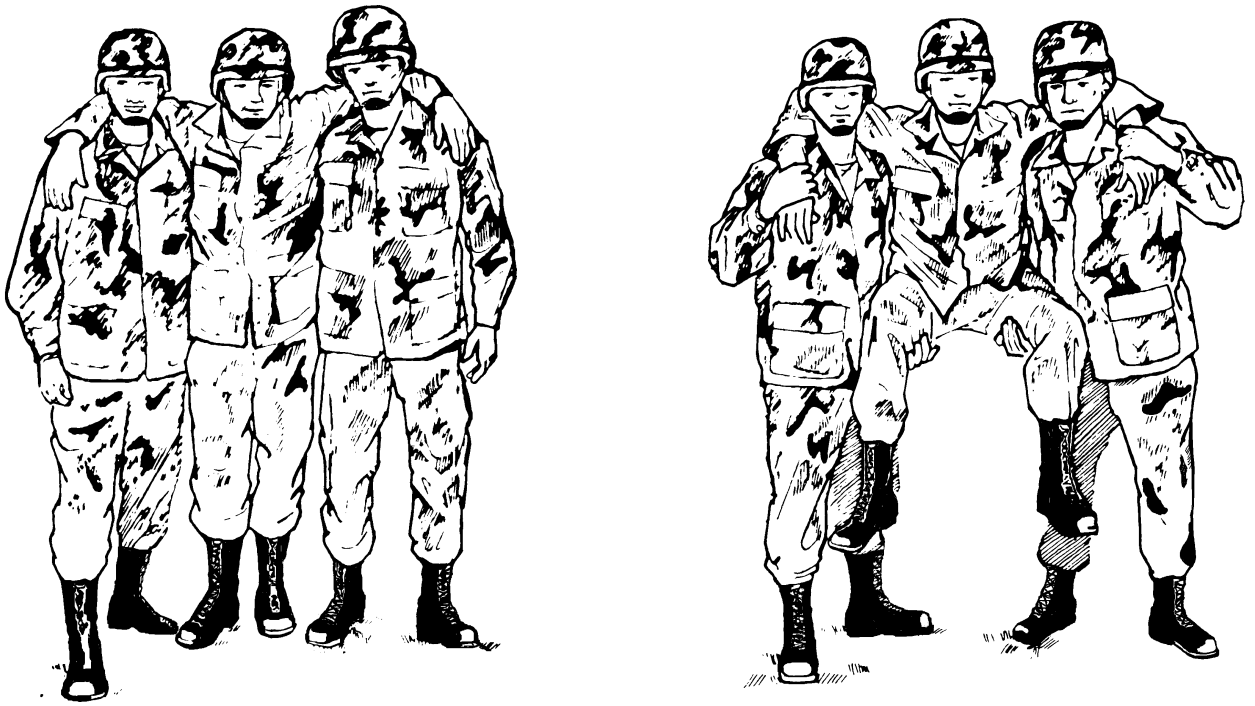

Figure 8-16. Two-man supporting carry.

(2) The *two-man arms carry* (Figure 8-17) is useful in carrying a casualty for a moderate distance (50 to 300 meters) and placing him on a litter. To lessen fatigue, the bearers should carry the casualty high and as close to their chests as possible. In extreme emergencies when there is not time to obtain a spine board, this carry is the safest one for transporting a casualty with a back injury. If possible, two additional bearers should be used to keep the casualty's head and legs in alignment with his body. The bearers—

(*a*) Kneel at one side of the casualty and place their arms beneath the casualty's back, waist, hips, and knees.

(*b*) Lift the casualty while rising to their knees.

(*c*) Turn the casualty toward their chests, while rising to a standing position. Carry the casualty high to lessen fatigue.

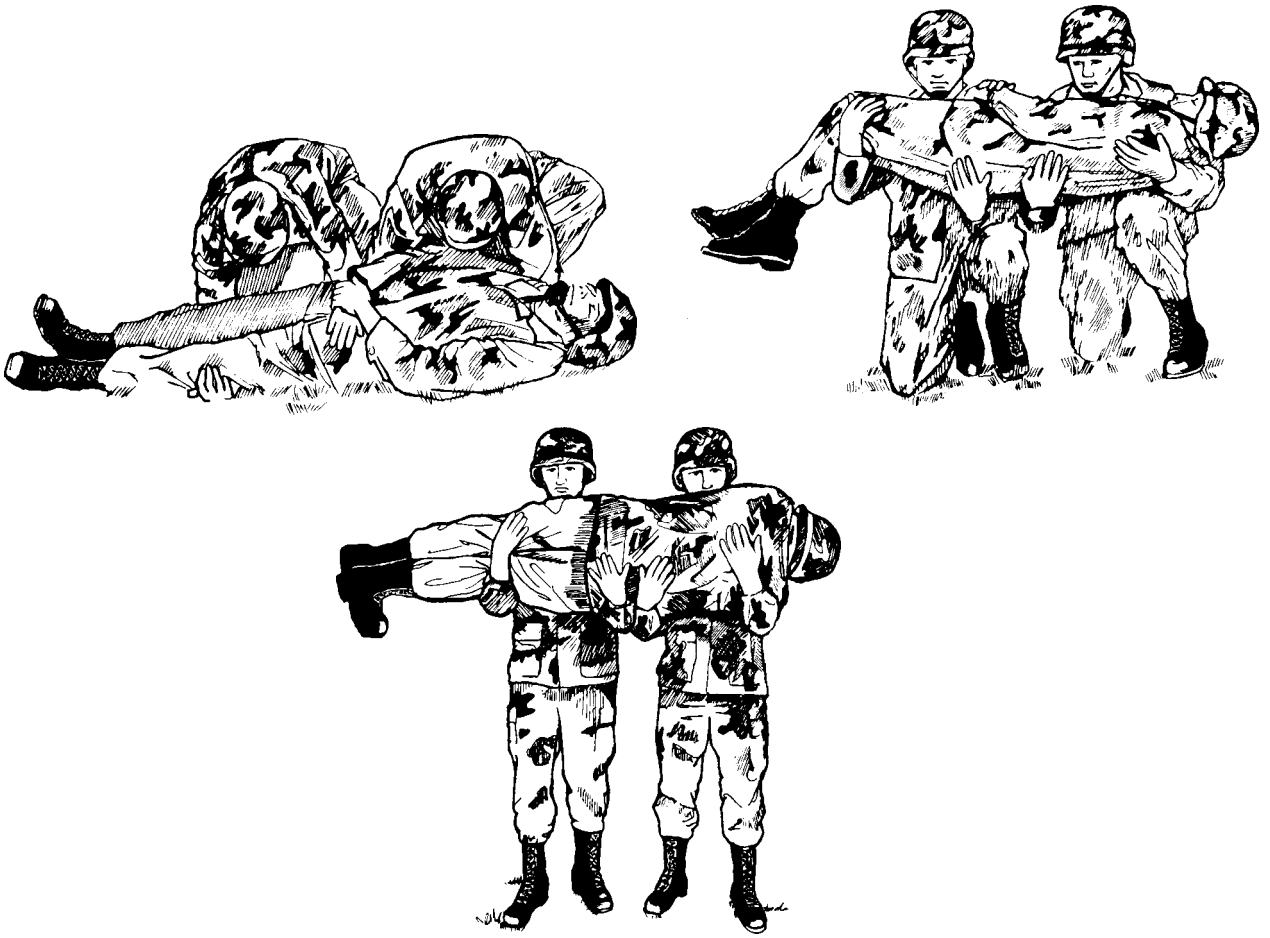

Figure 8-17. Two-man arms carry.

(3) The *two-man fore-and-aft carry* (Figure 8-18) is a useful two-man carry for transporting the casualty over a long distance (over 300 meters). The taller of the two bearers should position himself at the casualty's head. By altering this carry so that both bearers face the casualty, it is useful for placing a casualty on a litter.

(*a*) One bearer spreads the casualty's legs and kneels between them with his back to the casualty. He positions his hands behind the casualty's knees. The other bearer kneels at the casualty's head, slides his hands under the arms, across the chest, and locks his hands together.

(*b*) The two bearers rise together, lifting the casualty.

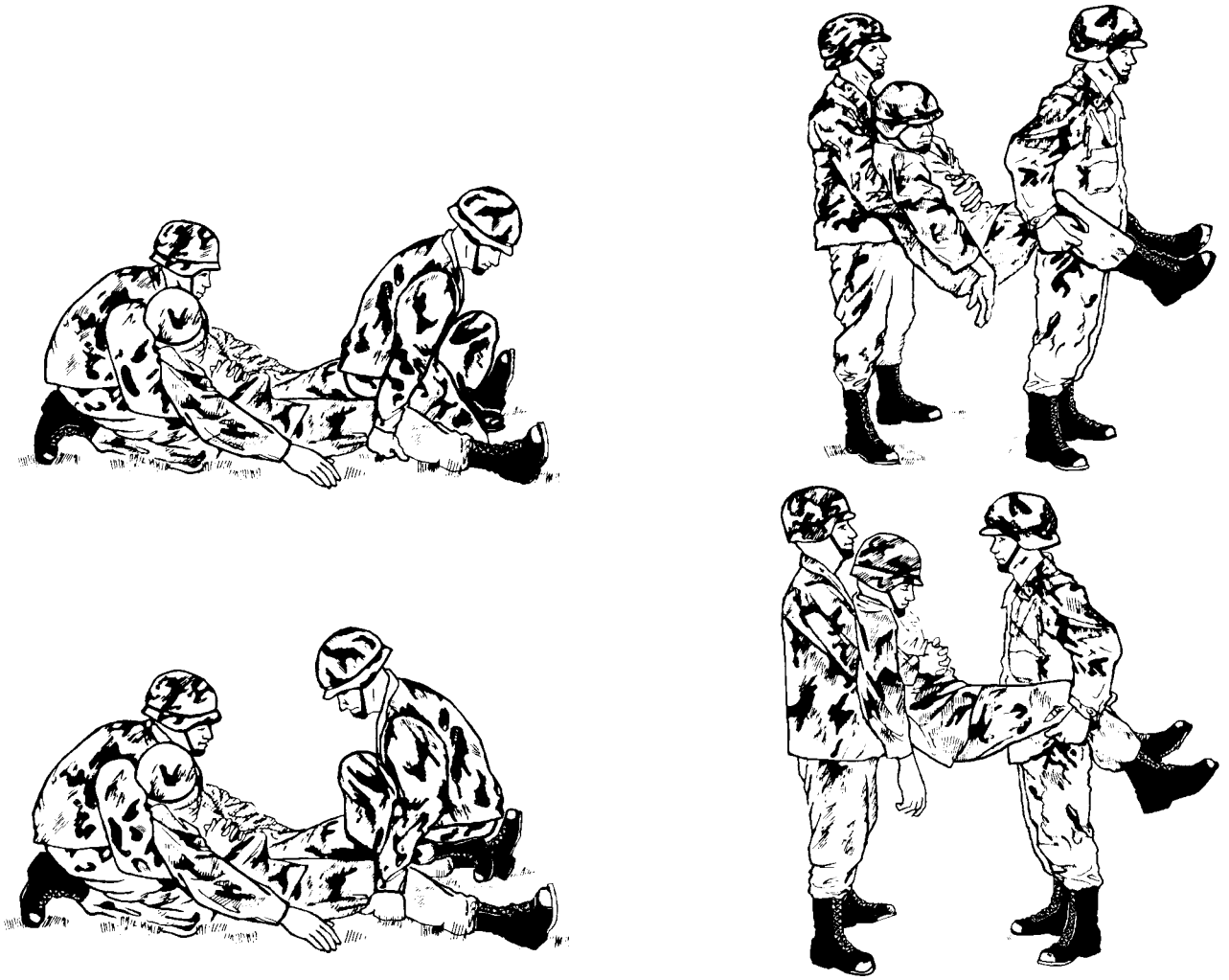

Figure 8-18. Two-man fore-and-aft carry.

(4) Only a conscious casualty can be transported with the *four-hand seat carry* (Figure 8-19) since he must help support himself by placing his arms around the bearers' shoulders. This carry is especially useful in transporting a casualty with a head or foot injury for a moderate distance (50 to 300 meters). It is also useful in placing a casualty on a litter.

(*a*) Each bearer grasps one of his wrists and one of the other bearer's wrists, thus forming a packsaddle.

(*b*) The two bearers lower themselves sufficiently for the casualty to sit on the packsaddle; then, they have the casualty place his arms around their shoulders for support. The bearers then rise to an upright position.

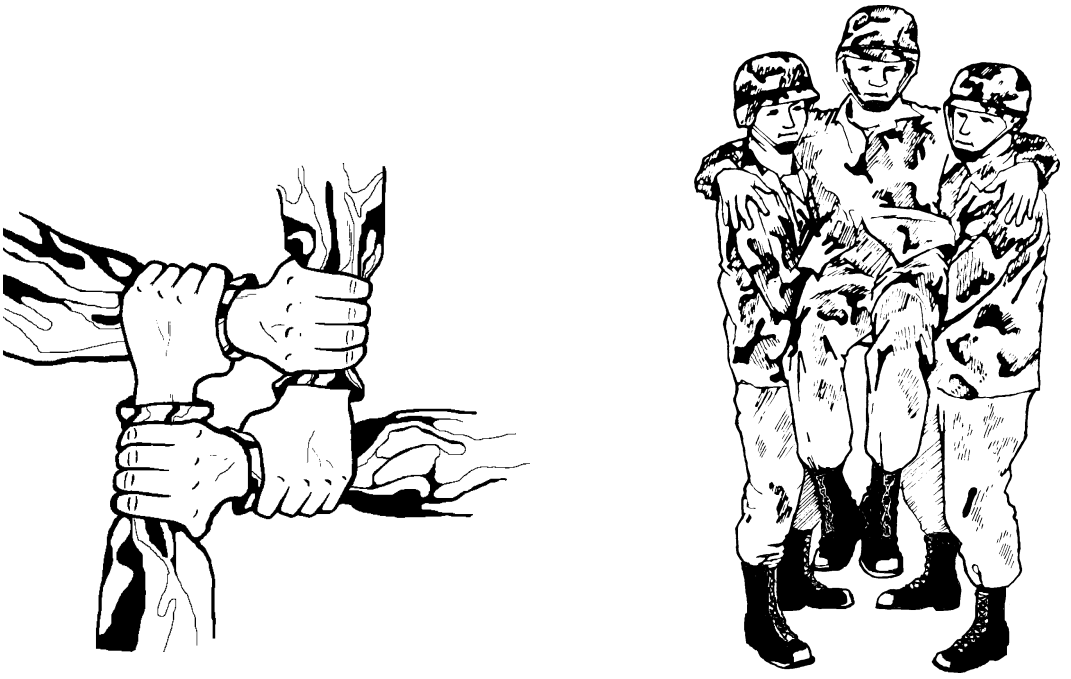

Figure 8-19. Four-hand seat carry.

(5) The *two-hand seat carry* (Figure 8-20) is used when carrying a casualty for a short distance (up to 50 meters) and in placing a casualty on a litter. With the casualty lying on his back, a bearer kneels on each side of the casualty at his hips. Each bearer passes his arms under the casualty's thighs and back, and grasps the other bearer's wrists. The bearers rise lifting the casualty.

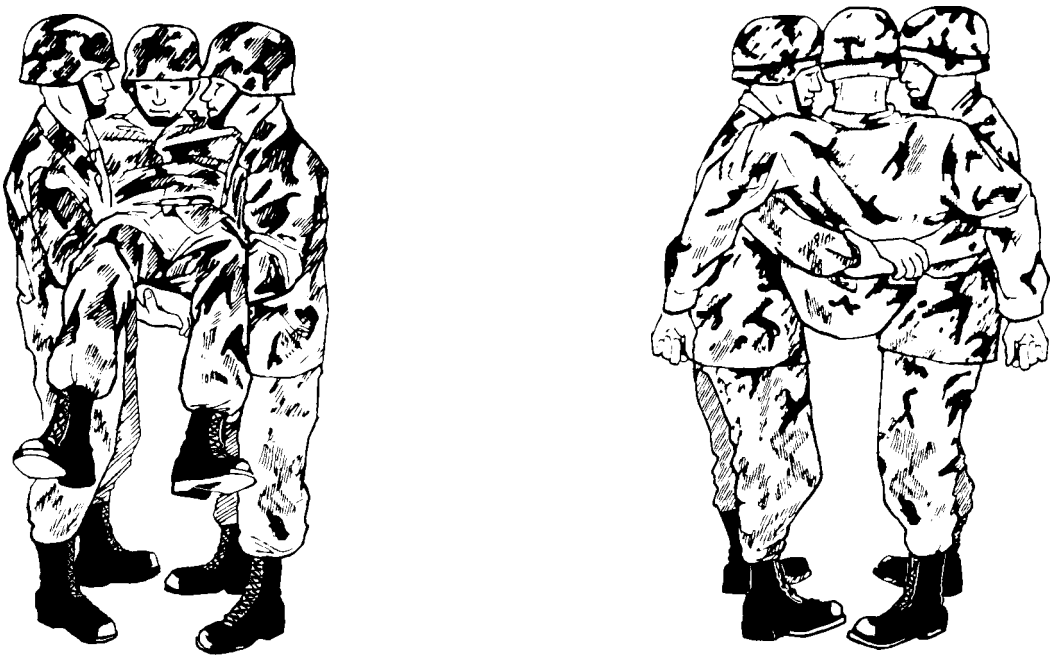

Figure 8-20. Two-hand seat carry.

8-7. Special Manual Evacuation Techniques

The use of special techniques is required to remove injured soldiers from tanks, other armored vehicles, motor vehicles, or from other limited-access positions. The procedures for extracting a casualty include—

CAUTION

- Parking next to a battle damaged tank can draw antitank fire to the ambulance.
- If there is the potential for enemy fire approach from the opposite side of the vehicle, using all available cover and concealment.
- Ambulance teams should park the vehicle behind protective terrain and dismount with the necessary equipment to provide emergency medical treatment to include stabilizaton of the head and spine, when required.

- Observing the vehicle for fire.

WARNING

Exercise extreme caution when approaching a burning vehicle. Use fire suppression equipment and any protective measures available. In some cases, attempting to save the crew of a burning vehicle may only result in the injury or death of the rescuer. This must be a rescuer's decision based on the specific circumstances.

- Gaining access to the casualty.
- Administering lifesaving measures.
- Freeing the casualty from the vehicle or other limited-access positions.
- Preparing the casualty for removal.
- Transporting the casualty from the site.

NOTE

Removing a wounded soldier from the interior of a tank is difficult and requires speed (as there is the potential that a damaged tank may explode or the tank may be more easily acquired/targeted by the enemy). Whenever possible, crew members should be used to extract casualties from tanks because of their experience with these vehicles.

a. Removing an Injured Driver from a Tank Through Driver's Hatch.

DANGER

Before traversing the turret, ensure the driver's body is clear of the turret or you could kill him.

NOTE

Three soldiers are required to remove the injured driver through the driver's hatch.

(1) The crew member in the turret traverses the turret so that the driver's hatch (1) is under the rear of the turret (2) and the main gun is over the rear deck (Figure 8-21).

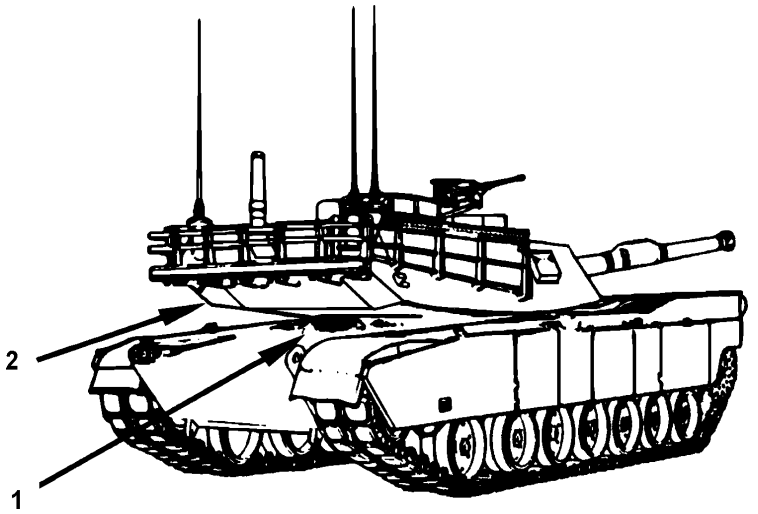

Figure 8-21. The driver's hatch and rear turret of an M1 tank.

(2) Lock the turret.

(3) The crew member in the turret opens the driver's hatch (Figure 8-22) as follows:

(*a*) Swing the loader's safety guard open.

(*b*) Reach into the driver's compartment and grasp the handle (1).

(*c*) Press button (2) and push up on handle (1).

(*d*) Turn crank (3) clockwise (4) to open the driver's hatch.

(*e*) Swing loader's safety guard closed.

(4) The crew member in the turret unlocks the turret.

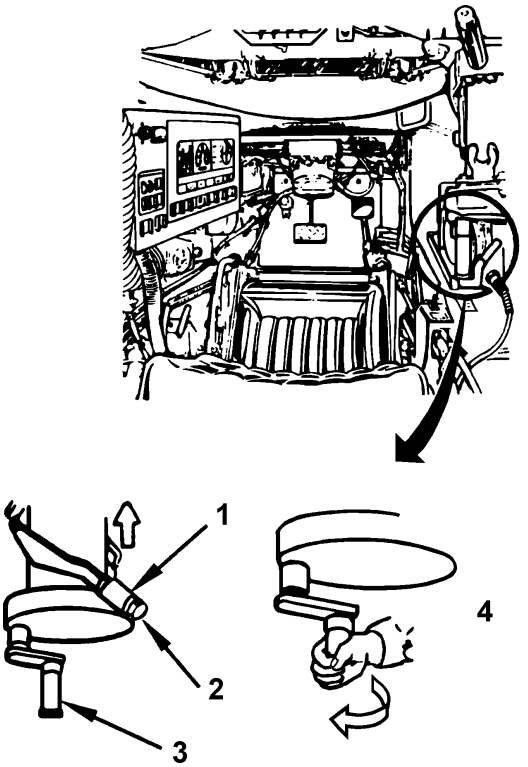

Figure 8-22. The crew member in the turret opening driver's hatch.

(5) The crew member in the turret, traverses the turret so that the rear of the turret (Figure 8-23) is over the right or the left side of the tank.

(6) The crew member in the turret locks the turret.

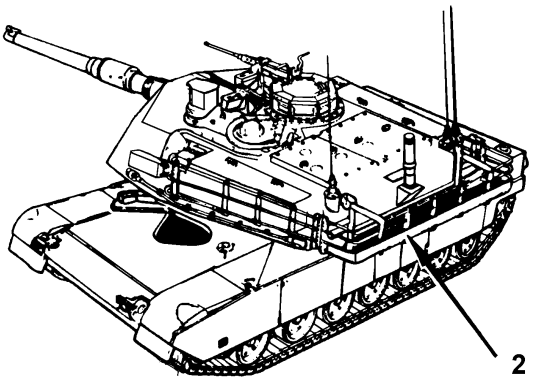

Figure 8-23. The rear of the turret in position.

(7) Three crew members (Figure 8-24) stand on the hull (1) around the drivers hatch opening (2).

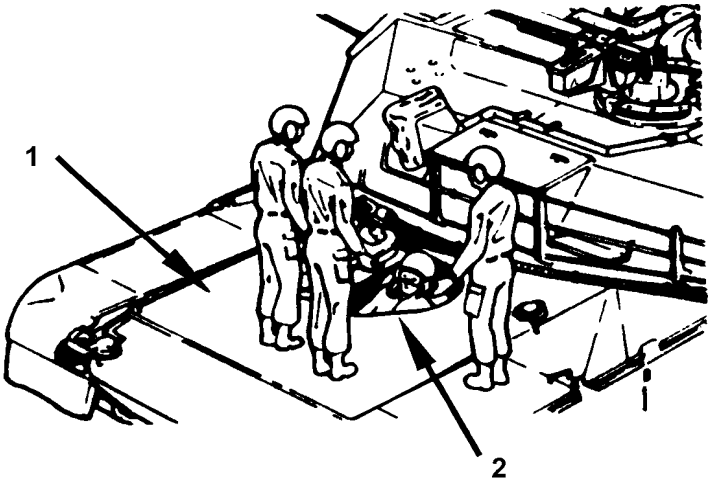

Figure 8-24. The crew members stand on the hull of the tank to extract the injured driver through the driver's hatch.

(8) One crew member on the hull reaches into the driver's hatch opening and disconnects the leads to the driver's helmet at the quick-disconnect plug (Figure 8-25).

NOTE

If a combat medic or an ambulance team member is available and a head or spine injury is possible or suspected, medical personnel will stabilize the neck as much as possible prior to attempting to extract the casualty. The neck may be stabilized using a cervical collar, Kendricks Extrication Device (KED), manual stabilization (using forearms of the rescuer, as appropriate when no equipment is available). Depending upon the tactical situation, these procedures may be abbreviated if the vehicle and its crew are in imminent danger.

(9) Stow the driver's steer-throttle control.

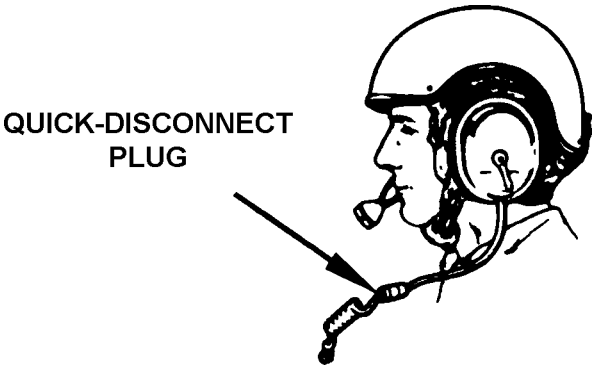

Figure 8-25. Disconnect driver's helmet.

(10) Raise headrest to stowed position and gently lower the driver's head.

(11) Rescuers should attempt to keep the casualty's head and neck as still as possible.

(12) The crew member (Figure 8-26) on the right side of the driver's hatch opening grasps the injured driver's left leg (1) and lays it on the hull.

(13) While supporting the injured soldier's torso, the crew member (Figure 8-26) on the left side of the driver's hatch opening grasps the injured driver's right leg (2) and lays it on the hull.

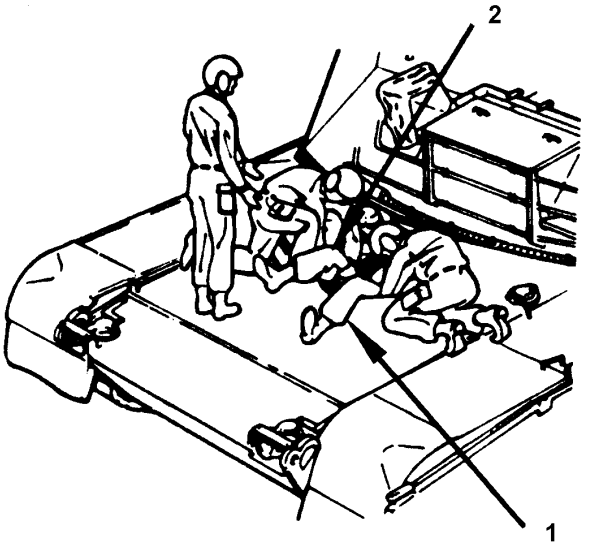

Figure 8-26. The crew members on the right and left sides of the driver's hatch.

(14) The remaining crew member grasps the injured driver by both ankles (Figure 8-27).

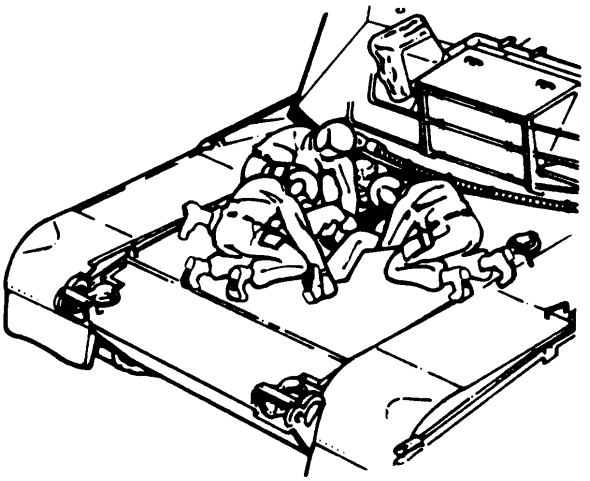

Figure 8-27. Third crew member grasps both ankles of the injured driver.

(15) While stablilizing the injured soldier's head and neck as much as possible, all three crew members pull and change grips as necessary to remove the injured driver from the driver's hatch opening (Figure 8-28).

(16) Lay the injured driver on the hull and administer first aid (buddy aid or combat lifesaver aid) or EMT (combat medic and/or ambulance team member), as appropriate.

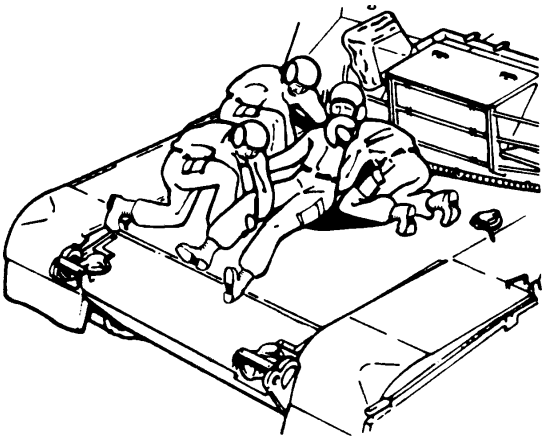

Figure 8-28. The crew members place the injured driver on the hull of the tank.

b. Removing an Injured Crew Member from a Tank Through the Loader's Hatch.

DANGER

Before traversing the turret, make sure the driver's body is clear of the turret or you could kill him.

NOTE

Three crew members are needed to remove an injured crew member through the loader's hatch. To remove—

- An injured driver through the loader's hatch, begin at Step (1).

- Another injured crew member through the loader's hatch, execute Steps (4), (13), (14), (15), and (16).

(1) The crew member in the turret traverses the turret so that the driver's hatch (1) (Figure 8-21) is under the rear turret (2) and the main gun is over the rear deck.

(2) Lock turret in place.

(3) Open loader's hatch.

(4) Prepare loader's machine gun for travel.

(5) Stow loader's guards.

(6) Stow loader's seat.

(7) Swing knee switch (Figure 8-29) up to the safe position.

(8) Swing loader's safety guard open.

(9) The crew member in the turret reaches into the driver's station (1) and adjusts the seat as follows (Figure 8-30):

(*a*) Grasp the upper seat adjustment lever (2) with left hand.

(*b*) Push the adjustment lever (2) all the way in and hold.

(*c*) Grasp the right top corner of the seat back cushion (3) with the right hand; pull it all the way down.

(*d*) Let go of the adjustment lever (2).

(*e*) Make sure the driver's seat is in the down position. If not, grasp the seat lever (4) with the left hand and push in toward the driver. When the seat starts to go down, let go of the lever (4). Gently lower the seat.

(*f*) Let go of the back seat cushion (2).

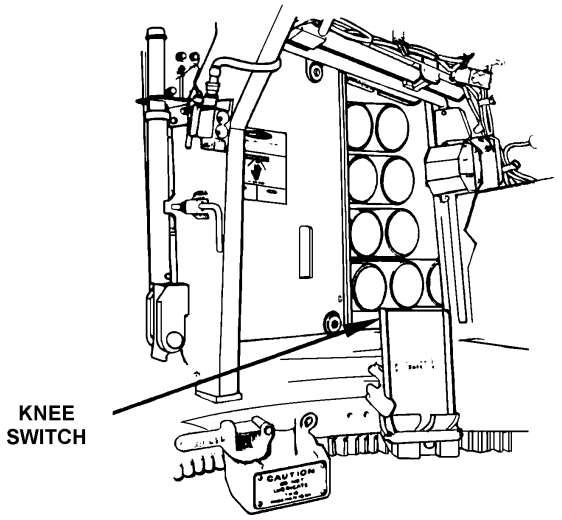

Figure 8-29. Knee switch.

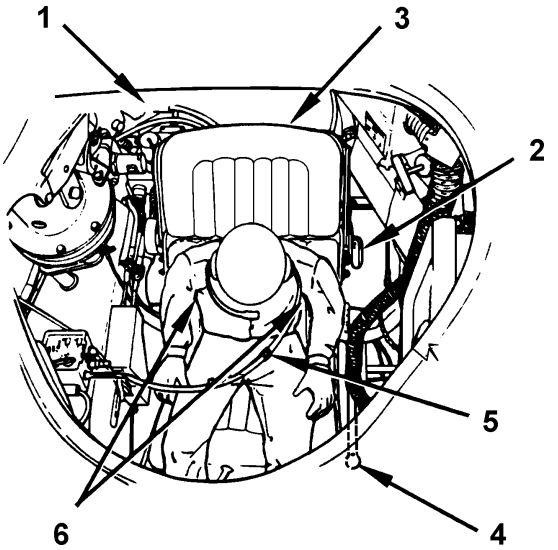

Figure 8-30. The driver's station.

(10) The crew member in the turret reaches into the driver's station and disconnects the leads to the driver's helmet at the quick-disconnect plug.

(11) Raise the headrest to the stowed position and gently lower the driver's head.

(12) One crew member in the turret grasps the injured driver under the arms (6) (Figure 8-30) and pulls him into the turret. Another crew member in the turret grasps the injured driver and helps to pull him into the turret.

NOTE

Rescuers should always attempt to stabilize the injured soldier's head and neck prior to moving him.

(13) If the gunner is being removed, pull the pins (1) (Figure 8-31) from the seat back posts (2) and pull the seat back (3) by grabbing the strap (4).

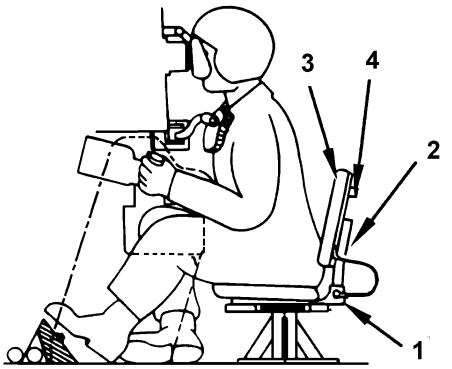

Figure 8-31. Seat assemblage.

(14) Two crew members in the turret move the injured crew member to the area under the loader's hatch opening (Figure 8-32).

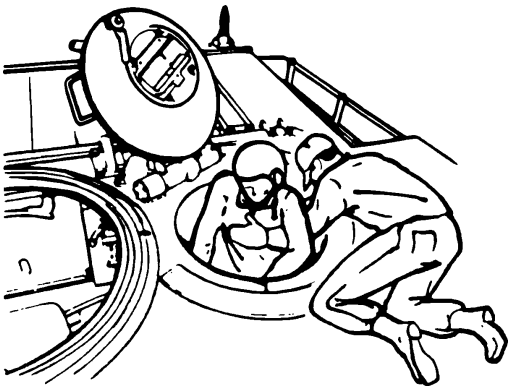

Figure 8-32. Loader's hatch opening.

(15) One crew member gets on the turret next to the loader's hatch opening.

(16) The two other crew members in the turret lift the injured crew member up so that the crew member on the turret can grasp the injured crew member.

(17) Close the loader's knee guard.

(18) Lay the injured driver on the turret and administer first aid (buddy aid or combat lifesaver aid) or EMT (combat medic and/or ambulance team member), as appropriate.

8-8. Evacuation from the Bradley Infantry Fighting Vehicle

a. Steps in Casualty Evacuation.

(1) Observe the vehicle for fire.

(2) Extract the casualty from the vehicle.

NOTE

As discussed in paragraph 8-7 and within the limits of specific situation (tactical situation, time available, and equipment availability) the injured soldiers head and neck should be stabilized prior to extractation.

(3) Check and treat the casualty.

(4) Evacuate the casualty.

b. Vehicle Exit Procedures.

(1) The M2 BIFV is equipped with six exits (Figure 8-33). Some of these exits are used to evacuate specific crew members while others are used to evacuate any of the crew. The exits are—

- Commander's hatch.
- Gunner's hatch.
- Driver's hatch.
- Cargo hatch.
- Ramp door.
- Ramp.

(2) When possible, the commander's, gunner's, and driver's hatches are the evacuation exits for personnel from each of these three positions. If any or all of these exits are blocked, or if the tactical

situation prevents their use, casualties from these three positions are evacuated through the troop compartment and out the ramp door or the ramp.

(3) The ramp is the main exit used to evacuate casualties from the troop compartment. The ramp door is used if the ramp is inoperative and cannot be opened. Because of the difficulty in evacuating casualties through the cargo hatch, it should be used only as a last resort.

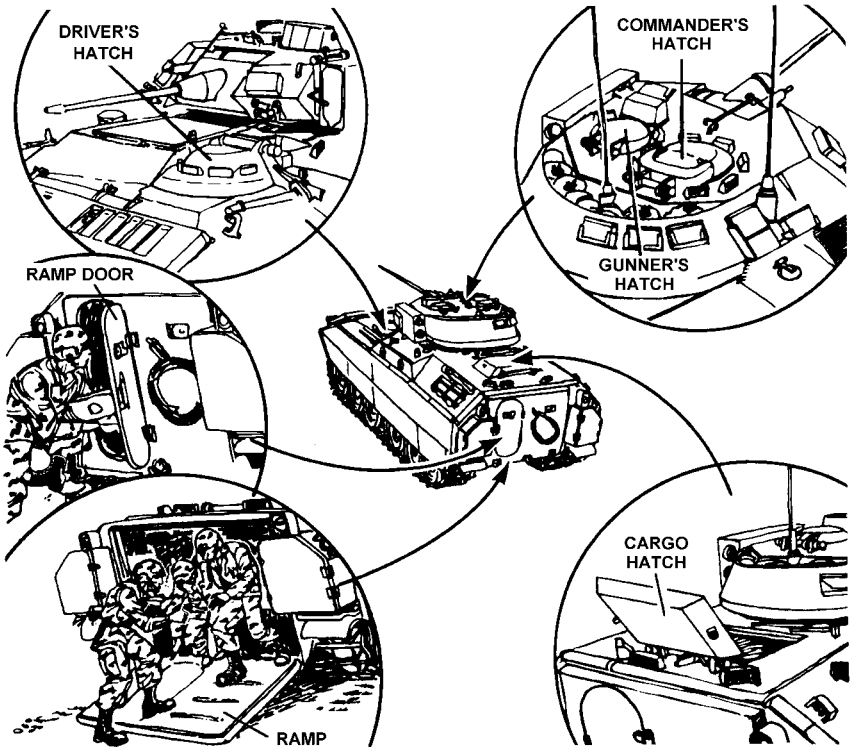

Figure 8-33. BIFV exit points.

c. Casualty Evacuation Procedures.

(1) *Driver.* When possible, the driver is evacuated through the driver's hatch. After the hatch is unlocked and opened from the outside, one member of the evacuation squad leans, head first, into the hatch to ensure that the engine is off, range selector is in gear, and hand brake is set. The squad member raises the driver's seat to the full upright position, unbuckles the driver's seat belt, and removes his helmet. Depending on the driver's injuries, he is lifted out of the vehicle by two individuals (helped by another from inside the vehicle when possible). A pistol belt placed around the driver's chest can be used to help pull him from the vehicle (Figure 8-34).

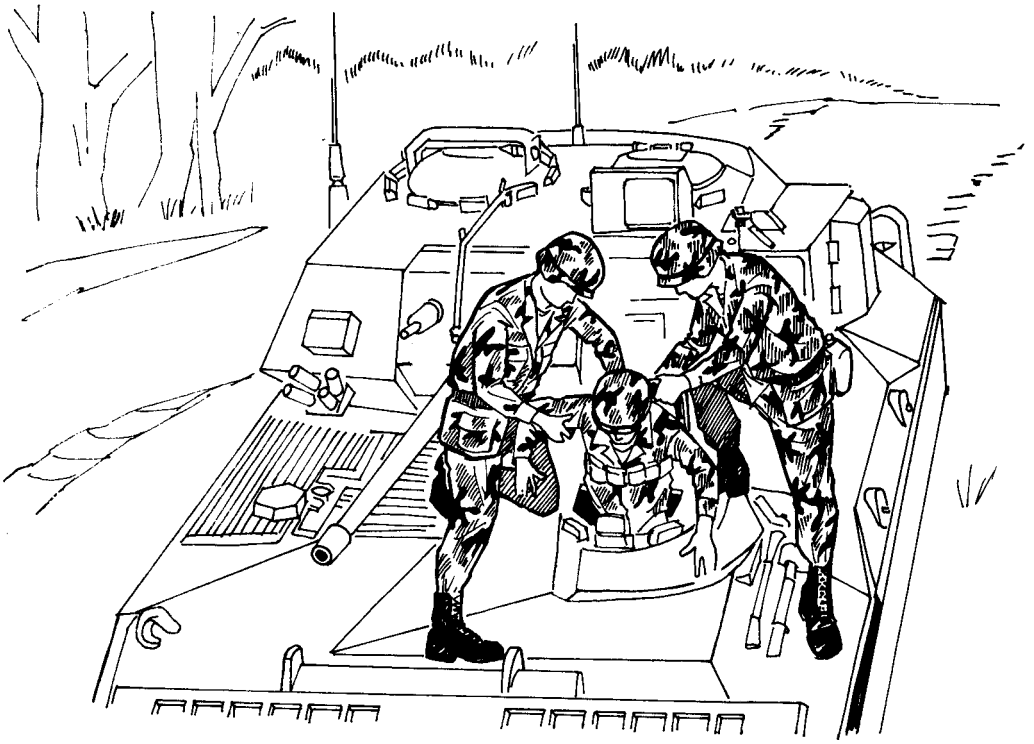

Figure 8-34. Evacuating BIFV driver.

(*a*) If the driver's hatch is inoperable or the vehicle is receiving enemy fire, it may be necessary to evacuate the driver through the troop compartment and out the ramp. The driver's seat back is lowered, his seat belt is unbuckled, and his helmet removed. The evacuation team then pulls him over the vehicle seats taking care not to further injure the driver.

(*b*) If the vehicle is on its side, the driver must also be supported during the evacuation process to prevent further injury. If the vehicle is on its left side, it requires two people to remove the driver because the hatch opening will be next to the ground. If the vehicle is on its right side, four people will be required to remove the driver and pass him down from the vehicle to the ground (Figure 8-35).

(2) *Vehicle commander and gunner.* The methods of evacuating the vehicle commander and the gunner depend upon whether one or both are casualties and whether or not the turret is operational.

(*a*) If the turret is operational and only one soldier is injured, the uninjured soldier rotates the turret to the 6400 mil position. This action aligns the turret opening with the turret shield door. **The turret power drive should then be turned off to prevent the turret from moving during the evacuation.** The injured soldier is rotated to the center of the turret and pulled from his seat. He is guided through the turret shield opening and moved into the troop compartment and out the ramp. If the turret cannot be rotated, the evacuation must be accomplished through the turret hatches.

(*b*) If the turret hatch cover does not function, the hatch will have to be opened from the top of the vehicle. A crowbar and mattock head are used to pry open the gunner's hatch, using the mattock head as a pivot for the crowbar. The hatch can be opened by prying between the gunner's right periscope and the vehicle commander's left periscope (Figure 8-36).

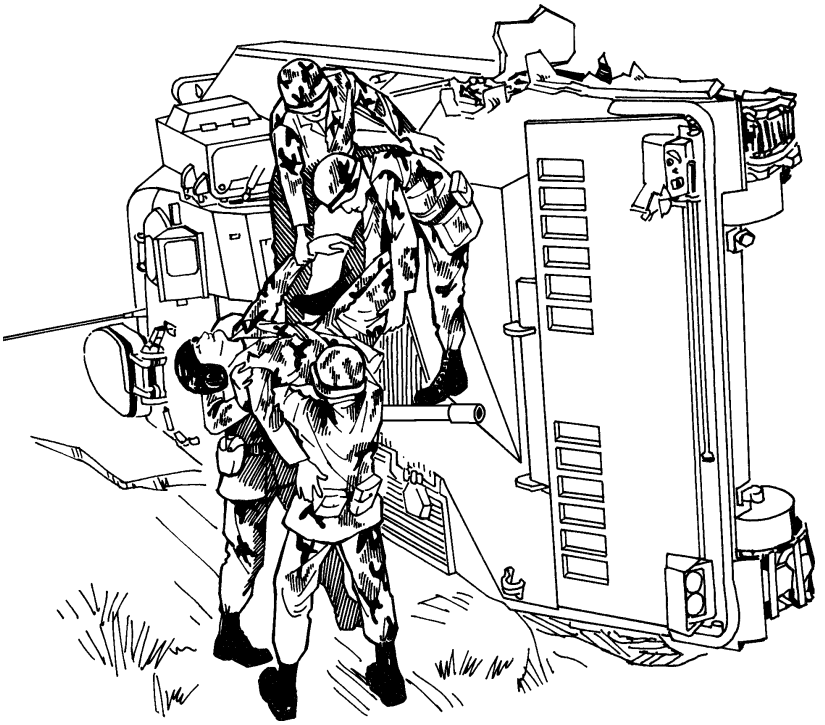

Figure 8-35. BIFV driver evacuation, vehicle on side.

(3) *Soldiers in the troop compartment*. Injured soldiers in the troop compartment will be evacuated through the ramp, ramp door, or cargo hatch. The casualties' seat belts must be unbuckled and their helmets disconnected or headsets removed. They will then be evacuated through the most convenient exit.

NOTE

During peacetime training and whenever possible, the KED can be used to remove a casualty from a tank to more effectively stabilize the spine. Stabilizing the spine should be accomplished with the equipment on hand in all but the most dangerous circumstances.

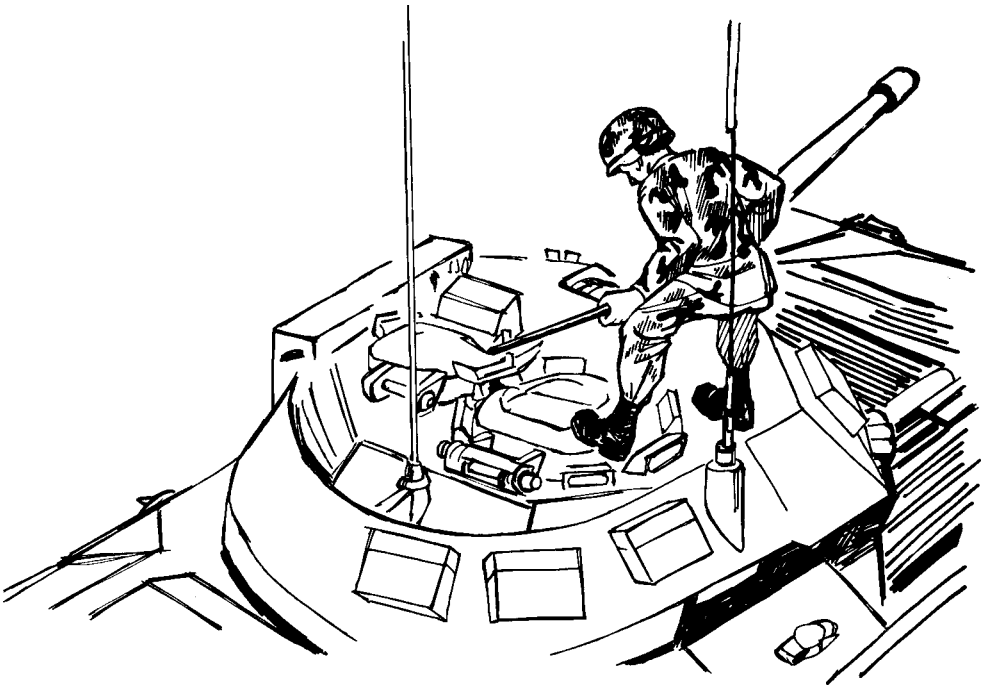

Figure 8-36. Opening gunner's hatch from outside vehicle.

8-9. Minefield Extraction

In modern warfare and stability operations and support operations, it is a common occurrence for soldiers to come upon minefields. Often times the minefield hazard is not recognized until a mine has detonated and a portion of the unit is already in the minefield. A well-developed, well-rehearsed evacuation drill is necessary to extract an individual or a unit from a mined area. Units should develop evacuation drills for both dismounted and mounted operations. It is helpful for units/personnel to observe the local residents to determine if there is an area that they avoid. Often this is an indication of where a minefield may be located. Units encountering minefields should seek assistance from their higher headquarters for engineer or explosive ordnance disposal (EOD) personnel to clear the minefield. However, all soldiers should be trained on minefield extraction techniques and minefield survival rules (paragraph 8-10). Refer to FM 20-32 for additional information on mine awareness.

a. Dismounted Extraction.

(1) All personnel freeze and crouch into a low, silhouetted position. Be cautious when making this movement to ensure that soldiers do not detonate another mine. If a protective mask is worn on the hip, do not allow it to come in contact with the ground because contact may detonate a mine. Individuals must overcome the urge to rush to the help of casualties; this will prevent them from also becoming casualties.

(2) The leader designates a security element and a soldier to assist in casualty evacuation.

(3) Soldiers extract along the path they entered. They step in the same places as before if possible; if impossible to do so, they probe their way out.

(4) The security element sets up in a security position. This element should consist of individuals who are not in the minefield.

(5) The soldier extracting the casualty performs the following steps:

NOTE

Whenever possible, a two-man team should be used to remove an injured soldier from a minefield. A single soldier carrying a casualty has a higher potential to stagger under the weight of his burden and/or to lose his balance and fall.

(*a*) Probes a 1-meter path to the casualty. (Refer to the Soldier's Manual of Common Tasks [SMCT] [Soldier Training Publication (STP) 21-1-SMCT] for additional information.

(*b*) Marks the cleared path with foot powder or marking tape as it is probed.

(*c*) Probes around the casualty to clear the area.

(*d*) Performs first aid (nonmedical soldier) or EMT (medic).

(*e*) Carry casualty out of the minefield along the cleared path. (Litter teams do not enter the area unless a 2-meter path has been cleared to the casualty.)

(6) Once clear of the minefield, the unit marks the threat and assembles back at the rally point.

(7) Report the incident to higher headquarters once you have cleared the minefield. If no personnel remain in the minefield, you should be 50 to 100 meters away from the minefield before using the radio. However, if personnel remain in the minefield, you must be at least 300 meters away from it before transmitting.

CAUTION

DO NOT use the radio in the minefield. If soldiers are in the minefield and radio transmission is required, move the transmitter at least 300 meters from the minefield to transmit. This will prevent accidental mine detonation from the radio signal.

(8) Evacuate the casualties. It is preferable that dedicated medical evacuation assets be used due to the severity of trauma wounds sustained from mine detonations. If medical personnel are not available, the combat lifesaver should provide enhanced first aid and initiate an IV. The combat lifesaver should accompany the casualties until medical personnel become available.

b. Mounted Extraction.

(1) The convoy commander halts the convoy and reports to higher headquarters.

(2) No vehicles move and no troops dismount unless directed to do so.

(3) Elements provide 360 degree security from vehicles.

(4) Check the disabled/damaged vehicle for casualties. Uninjured passengers should move to an undamaged vehicle if possible. Troops thrown from vehicles should not move if possible; extract by using dismounted evacuation procedures, as required. If necessary, casualties will require assistance to move to another vehicle.

(5) If engineers are not available, the senior leader assesses the situation and directs vehicles to back up along the entry-route tracks. If an immediate threat exists, occupants of damaged vehicles evacuate out the rear of the vehicle and along the vehicle-entry tracks. If no immediate threat exists, occupants of damaged vehicles remain in the vehicle until it is extracted.

(6) If engineers are available, they sweep the area and provide a cleared path for movement. Vehicles are recovered from the minefield using the following procedures:

(*a*) Engineers clear a lane that is wide enough for towing the vehicle.

(*b*) If an M88 is unavailable, use all available tow cables to increase the distance before towing.

NOTE

The M88 has a wider track base than other tracked vehicles. The actual scenario, availability of vehicles, and the placement pattern of the mines will determine if a vehicle other than the M88 may be used.

(*c*) Ensure that all towing shackle sets are complete and mounted.

(*d*) The towing vehicle should have tow cables on the front and the rear if possible.

(*e*) Rear cables should be attached to the lower mounts; this allows the crew to recover the vehicle without touching the ground.

(*f*) Pull the vehicle out at least two-vehicle lengths before switching to a tow bar.

(*g*) When towing a vehicle after a mine strike, the chance of fire is greater because of possible damage to the vehicle.

(7) Evacuate the casualties. It is preferable that dedicated medical evacuation assets be used due to the severity of trauma wounds sustained from mine detonations. If medical personnel are not available, the combat lifesaver should provide enhanced first aid and initiate an IV. The combat lifesaver should accompany the casualties until medical personnel become available.

(8) Road guards guide vehicles through the safe area.

(9) Mark, record, and report the threat if not accomplished by this time.

8-10. Rules for Surviving Minefields and Acquiring Casualties

a. As the number of minefields encountered in stability operations and support operations increases, it is important that each soldier be trained in and aware of rules for surviving minefields. Soldiers should consider that all terrain and structures are potentially mined or booby-trapped. The rules for surviving minefields are—

- If you did not drop it, do not pick it up.
- Beware of areas associated with basic human needs. They could be mined or booby-trapped.
- Leave mine disposal to the EOD personnel and combat engineers.
- All terrain and structures are potentially mined or booby-trapped.
- Avoid touching or removing foreign objects, no matter how attractive. They could be mined or booby-trapped.
- Stay on the traveled road. Adjacent areas may be mined.
- Do not use the radio while in the minefield (paragraph 8-9a[7]).
- Immediately report all confirmed or suspected mines.
- Mark and avoid unexploded ordnance (UXO) if possible. Consider them unstable.
- Develop and rehearse effective evacuation drills.

b. In convoy movement, some rules of thumb should be considered. The lead vehicle should be one of the heaviest vehicles in the unit and be hardened against a mine threat. They provide better protection against mine and UXO threat. If possible, do not lead a convoy with a HMMWV. This type of vehicle is extremely vulnerable to mine and UXO threat and is difficult to harden without commercial products.

c. Procedures for removing casualties from minefields must be included in the unit TSOP. Medical personnel and units may become involved with minefield extraction operations should they encounter a minefield, or if they are assisting a supported unit.

NOTE

It must be strongly emphasized to all soldiers that rushing to help a mine victim can lead to the rescuer becoming a casualty.

d. Medical personnel should—

- Reassure the casualty that help is coming. Assess the conscious casualty's medical condition. Direct self-aid measures, as appropriate. Advise the casualty not to attempt to move.
- Do not panic and create another casualty.
- Notify the higher headquarters of the situation and request engineer support.
- Extract yourself (if located in the minefield), marking the path as you go.
- Reenter along the marked path if one exists.
- Clear a path to the casualty (paragraphs 8-9 and 8-10).
- Provide EMT.
- Once the area is clear, mark it, record it on the map, and report to higher headquarters.

e. Medical personnel should anticipate and train for mine explosion injuries. Ground and air medical evacuation personnel should refine their skills for the care of these patients while en route from the point of injury to the supporting MTF. Unit medics should also train combat lifesavers to more effectively provide enhanced first aid for these injuries. Mine explosion injuries include—

- Blast injuries with fragments embedded.
- Burns.
- Traumatic amputations.
- Blunt trauma.
- Psychological anxiety reaction.

CHAPTER 9

LITTER EVACUATION

9-1. General

After patients are picked up in a forward area by litter bearers, they may be moved by surface or air assets to points as far to the rear as required by their medical condition and the tactical situation. The patient who must be transported on a litter is referred to as a *litter patient*.

This paragraph implements STANAG 2040 and QSTAG 519.

9-2. Types of Litters

A litter may be prefabricated or may be improvised from available materials. The Armed Forces use several types of standard litters. This standardization allows a patient to travel in various vehicles on the same litter; thereby, minimizing the possibility of further injury and saving valuable time.

a. *Standard Litters*. Standard litters are prefabricated and may have accessories to be used with them.

(1) The standard collapsible litter is the most widely used (Figure 9-1). It folds along the long axis only.

(*a*) The basic components of the litter are—

- Two straight, rigid, lightweight aluminum poles.
- A cover (bed) of cotton duck.
- Four wooden handles attached to the poles.
- Four stirrups (one bolted near the end of each pole). The stirrups support the litter when it is placed on the ground.
- Two spreader bars (one near each end of the litter). These bars are extended crosswise at the stirrups to hold the cover taut when the litter is open.
- Two litter securing straps (one attached to each pole at the stirrup bolts). These straps are used to secure the litter when it is closed.
- Accessories such as patient securing straps.

(*b*) Dimensions of the standard collapsible litters are as follows:

- Overall length is 90 inches.

- Overall width is 22 7/8 inches.
- Bed length is 72 inches.
- Bed width is 22 7/8 inches.
- Weight is 15 pounds.

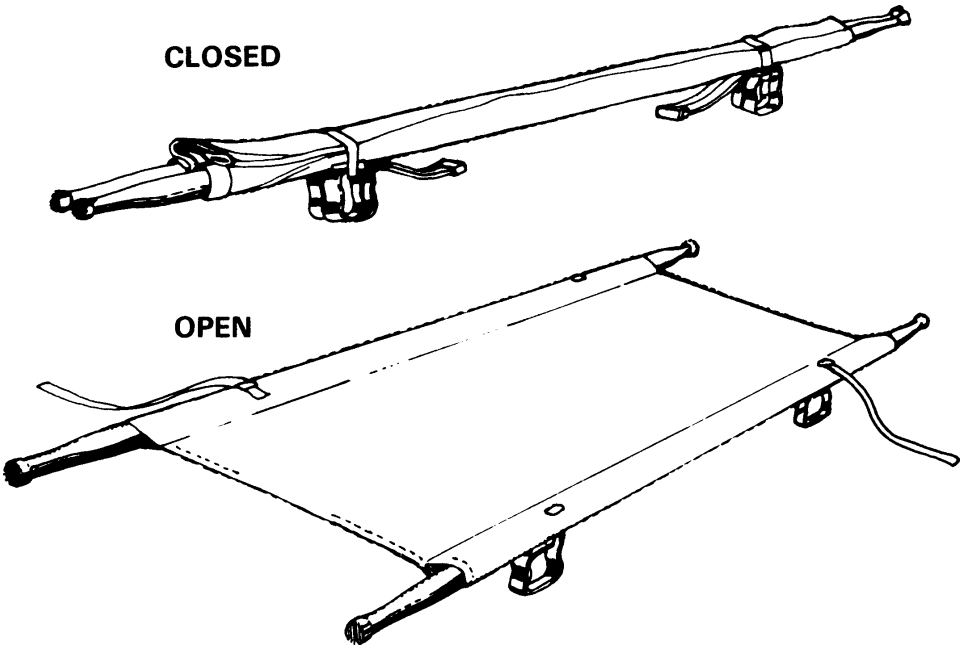

Figure 9-1. Standard collapsible litter.

NOTE

The standard collapsible litter is being replaced by the litter, folding, rigid pole and will be phased in as the standard collapsible litters are replaced. The new litter is 91.6 inches long with nominal adjustable handles (from 90 inches to 94.4 inches). It has a spreader bar and stirrup assemblies with interlocking securing buckles. It has aluminum poles, nylon handles, and a plastic polypropylene cover. This litter can be decontaminated and is painted with a chemical agent resistant material. It is assembled in the folded position and weighs 25 pounds.

(2) The patient securing strap (Figure 9-2) is used to hold the patient in position on the litter. It is designed to fit the straight and folding aluminum litters as well as other standard litters. It is available in quantities of four per litter. This strap can also be used with an improvised litter and as a patient restraint, if required. It is made from a 6-foot length of 2-inch webbing and a buckle with a locking device and spring.

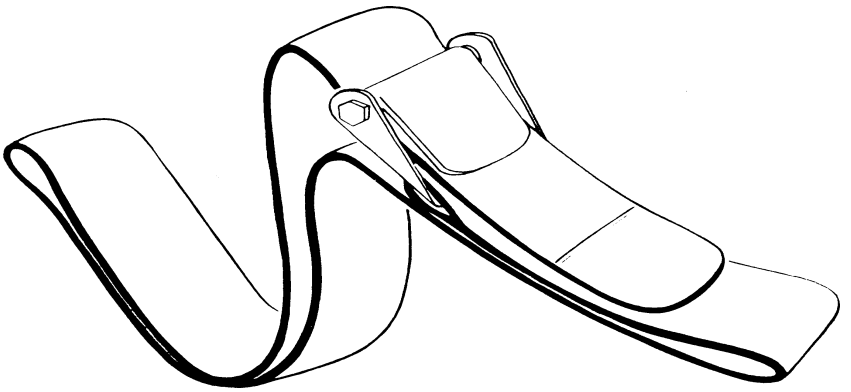

Figure 9-2. Patient securing strap.

(3) Another standard litter, with the same general dimensions when open, is the folding aluminum litter. It has folding lightweight aluminum poles (Figure 9-3). The poles can be folded to one-half their length when the litter is not in use.

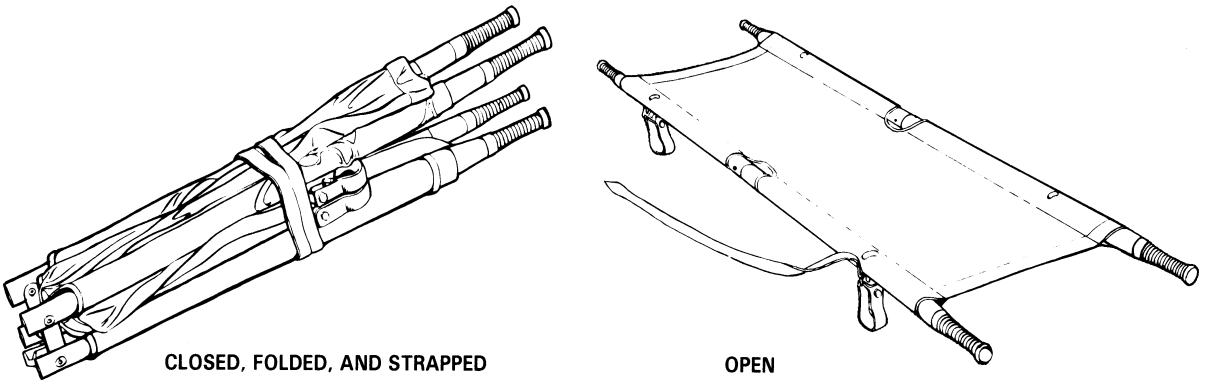

Figure 9-3. Folding aluminum litter.

(4) The poleless semirigid litter (Figure 9-4) is useful in evacuating patients from ships and in mountainous areas. It holds the patient securely in position and facilitates the movement of the patient in a vertical position. The dimensions of this litter are overall length, 83 3/4 inches; overall width, 22 3/4 inches; and it weighs 18 3/4 pounds. The basic components are—

- Semirigid cotton duck with wooden supports.
- Four webbing handles (two at each end). These straps can be used when the litter is carried by four bearers.
- Four loops. These loops are used to insert the poles for carrying.
- Headpiece. This is used to support the patient's head.
- Seven patient securing straps. These straps are used to secure the patient to the litter.

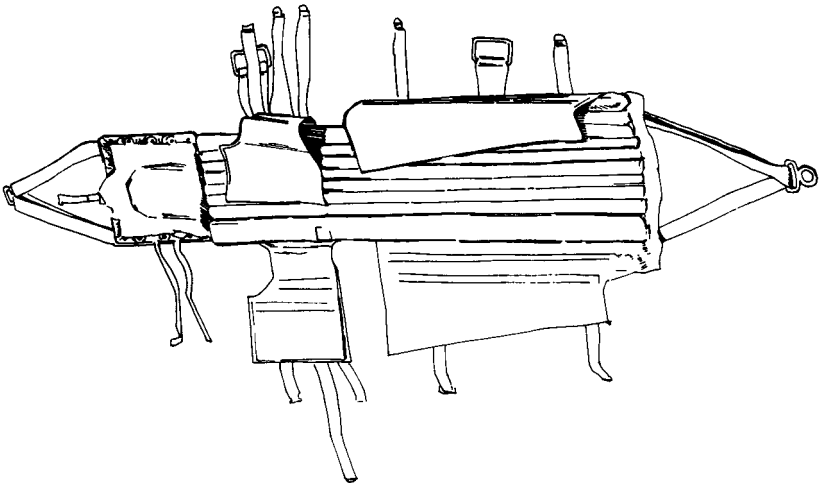

Figure 9-4. Poleless semirigid litter.

(5) The poleless nonrigid litter (Figure 9-5) can be folded and carried by the combat medic. It has folds into which improvised poles can be inserted for evacuation over long distances. It also has slings for hoisting, lowering, and carrying, and patient securing straps to secure the patient to the litter. (Refer to paragraphs E-34 through E-37 for additional information.)

(6) The Stokes litter (Figure 9-6) affords maximum security for the patient when the litter is tilted. (For additional information, refer to paragraphs E-30 through E-33.) The dimensions and basic components and their functions of the litter are provided below.

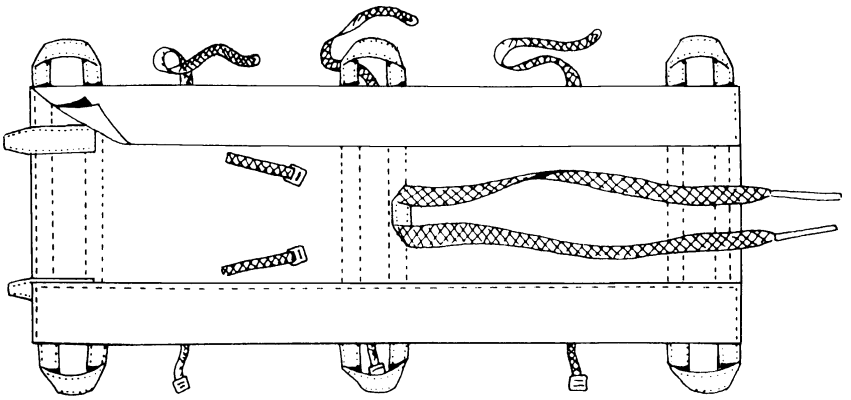

Figure 9-5. Poleless nonrigid litter.

- It is composed of a steel or aluminum tubular frame supporting a bed of wire mesh netting. It also has wooden support slats to support the patient's back.

- The lower half is divided into two compartments to accommodate the patient's legs.

- It has four webbed patient securing straps for use in securing the patient.

- It has ropes, cables, or steel rings that can be attached to the litter as required for vertical recoveries.

- Its dimensions are length, 84 inches; width, 23 inches; and weight, 31 1/2 pounds.

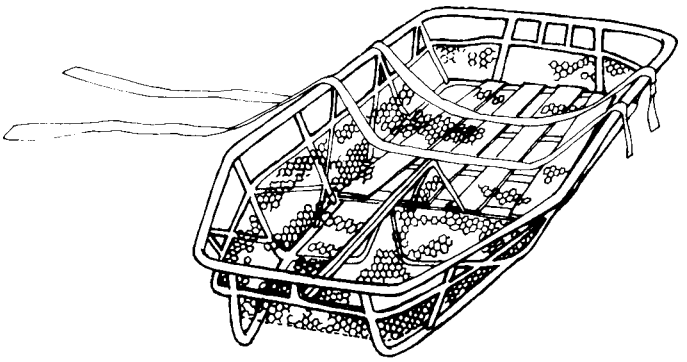

Figure 9-6. Stokes litter.

(7) The SKED litter (Figure 9-7) is a compact and lightweight transport system used to evacuate a patient over land. It may also be used to rescue a patient in the water. Detailed information on this system is contained in paragraphs E-26 through E-29.

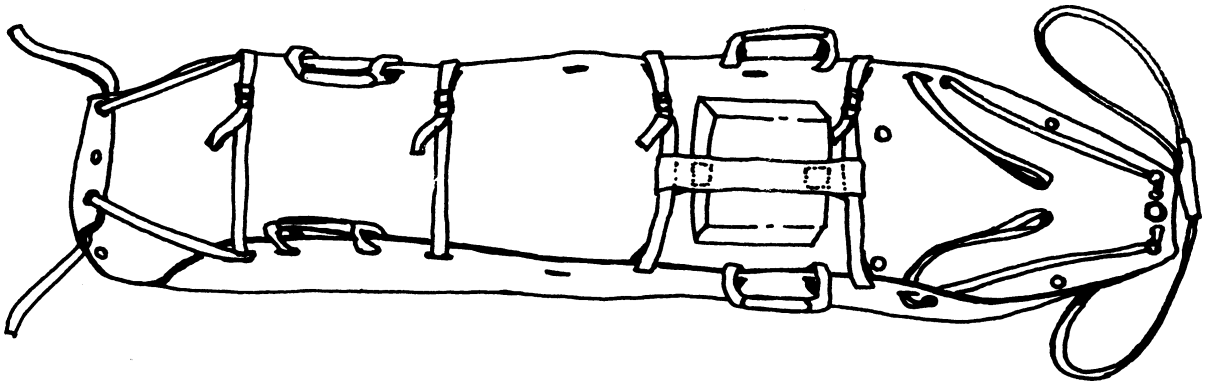

Figure 9-7. SKED litter.

b. Improvised Litters. Improvised litters are those made from various materials normally available in the forward area.

(1) There are times when a patient may have to be moved and a standard litter is not available. The distance may be too great for manual carries (Chapter 8) or the patient may have an injury (such as a fractured neck, back, hip, or thigh) that would be aggravated by manual transportation. In these situations, litters can be improvised from materials at hand. Improvised litters must be as well constructed as possible to avoid the risk of dropping or further injuring the patient. Improvised litters are emergency measures and must be replaced by standard litters at the first opportunity.

(2) Many different types of litters can be improvised, depending upon the materials available. A satisfactory litter can be made by securing poles inside such items as a blanket (Figure 9-8), poncho, shelter half, tarpaulin, mattress cover, jackets, shirts (Figure 9-9), or bedticks, bags, and sacks (Figure 9-10). Poles can be improvised from strong branches, tent poles, skis, lengths of pipe, and other objects. If objects for improvising poles are not available, a blanket, poncho, or similar item can be rolled from both sides toward the center so the rolls can be gripped for carrying a patient (Figure 9-11). Most flat-surface objects of suitable size can be used as litters. Such objects include doors, boards, window shutters, benches, ladders, cots, and chairs. If possible, these objects should be padded for patient comfort.

(*a*) To improvise a litter using a blanket and poles, the following steps should be used:

- Open the blanket and lay one pole lengthwise across the center; then fold the blanket over the pole

- Place the second pole across the center of the folded blanket.

- Fold the free edges of the blanket over the second pole and across to the first pole.

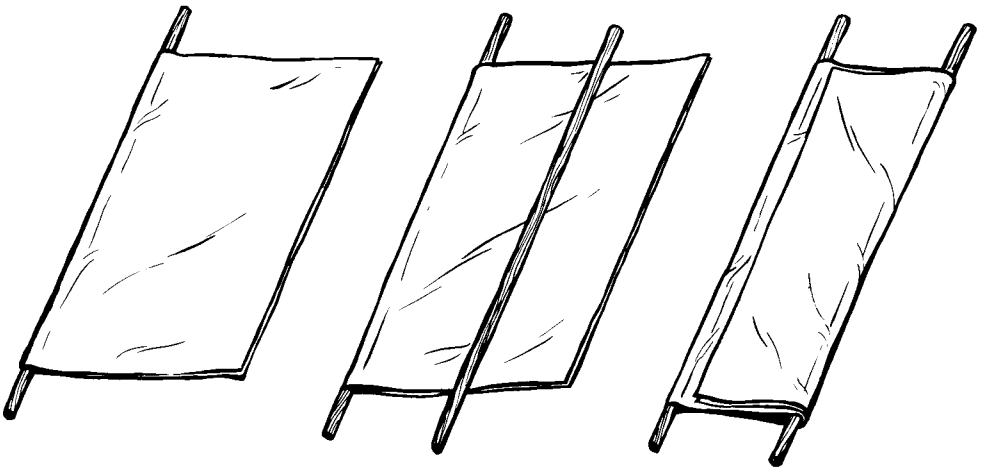

Figure 9-8. Litter made with blanket and poles.

(*b*) To improvise a litter using shirts or jackets, button the shirt or jacket and turn it inside out, leaving the sleeves inside, then pass pole through the sleeves.

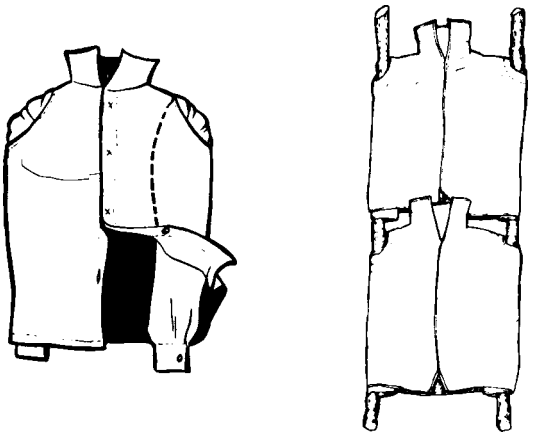

Figure 9-9. Litter improvised from jackets and poles.

(*c*) To improvise a litter from bedticks, bags, and sacks and poles, rip open the corners of bedticks, bags, or sacks; then pass the poles through them.

(*d*) If no poles are available, roll a blanket, shelter half, tarpaulin, or similar item from both sides toward the center. Grip the rolls to carry the patient.

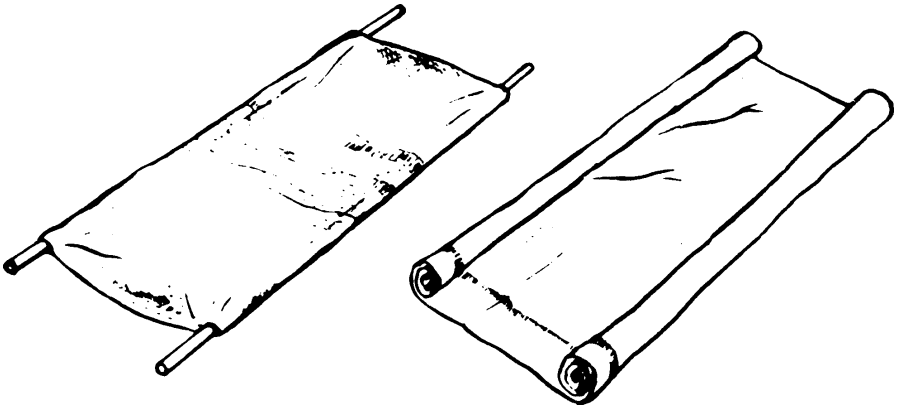

Figure 9-10. Litter improvised from bed sacks and poles.

Figure 9-11. Rolled blanket used as litter.

9-3. Dressed Litter

A litter is dressed with one, two, or three blankets (Figures 9-12 through 9-14) to reduce the danger of shock and to afford warmth and comfort during transport. In an NBC environment, the litter should be dressed with an impermeable cover (rubber poncho or similar material). This cover is folded over the patient to prevent additional exposure to contaminants. If an impermeable cover is not available, a blanket can be used.

a. To dress a litter with one blanket (Figure 9-12), place the blanket diagonally over the litter. After the patient is placed on the litter, bring the sides of the blanket over the patient and tuck in the edges at his head and feet.

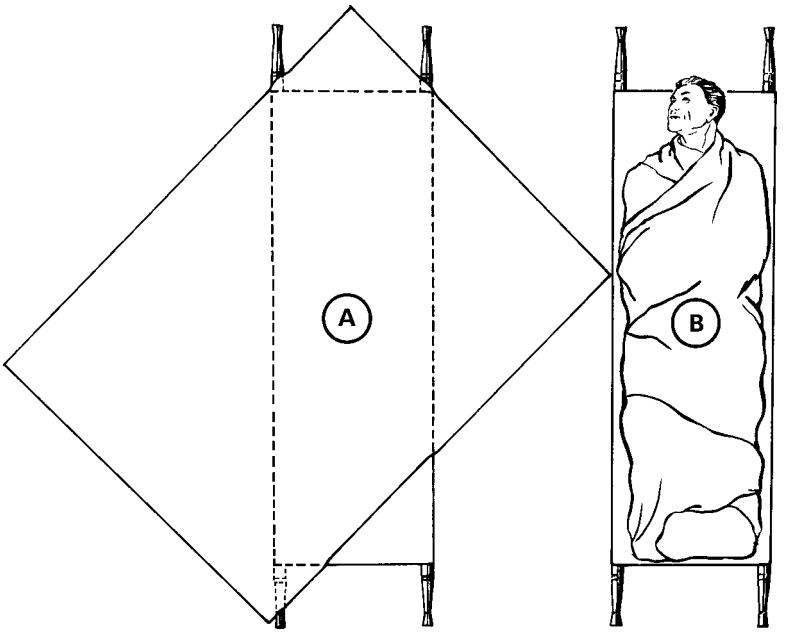

Figure 9-12. Dressing the litter with one blanket.

b. To dress a litter with two blankets (Figure 9-13), place the first blanket lengthwise across the litter with the blanket edge just beyond the head end of the litter. The second blanket is folded in thirds, lengthwise, and placed over the first blanket. Let the upper edge of the second blanket drop about 10 inches below the upper edge of the first one. Open the folds on the second blanket about 2 feet from the foot end. After the patient is placed on the litter, bring the bottom of the blanket up and over the patient's feet. Leave a small fold between his feet. Tuck the two folds closely over and around his feet and ankles. Open the folds on the second blanket about 2 feet from the foot end. After the patient is placed on the litter, bring the bottom of the blanket up and over the patient's feet. Leave a small fold between his feet. Tuck the two folds closely over and around his feet and ankles. Finally, wrap the patient with one side and then the opposite side of the first blanket.

NOTE

If the patient to be placed on the litter is tall, the blanket should be placed lower on the litter.

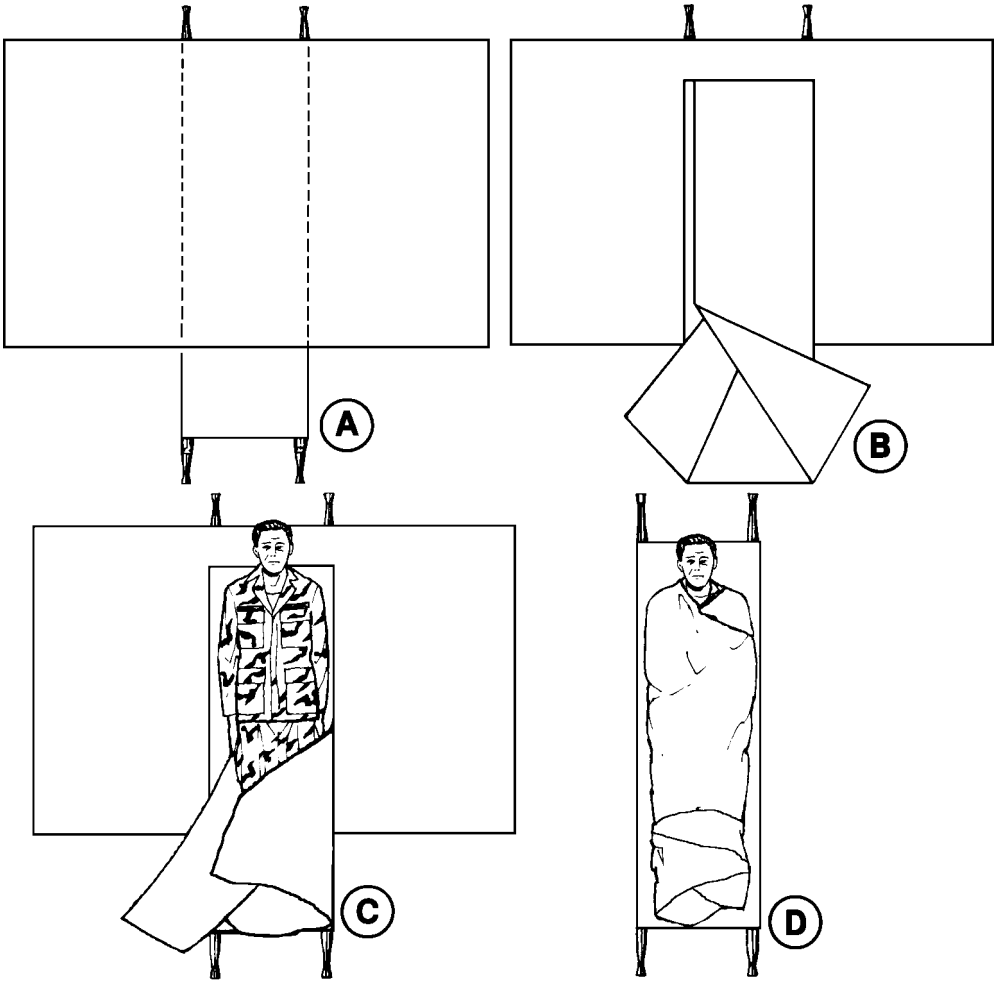

Figure 9-13. Dressing the litter with two blankets.

c. To dress a litter with three blankets (Figure 9-14), place the first blanket on the litter lengthwise so that one edge is even with the litter pole farthest from you. The upper end of the blanket is even with the head of the canvas. Fold the blanket back upon itself once, so that the folded edge is along the litter pole

nearer you and the outer edge of the blanket overhangs the other pole. Place the second blanket lengthwise over the first one as described above, except start with the opposite litter pole so that the blanket overhang is on the opposite side of the first blanket. After the patient is placed on the litter, fold the third blanket once lengthwise and place it over the patient with one end under his chin. Fold the overhanging edges of the first two blankets over the third blanket and secure them in place with safety pins, if available, or patient securing straps.

NOTE

This method of dressing the litter gives four thicknesses of blanket over and under the patient. This provides additional warmth and will help in preventing shock.

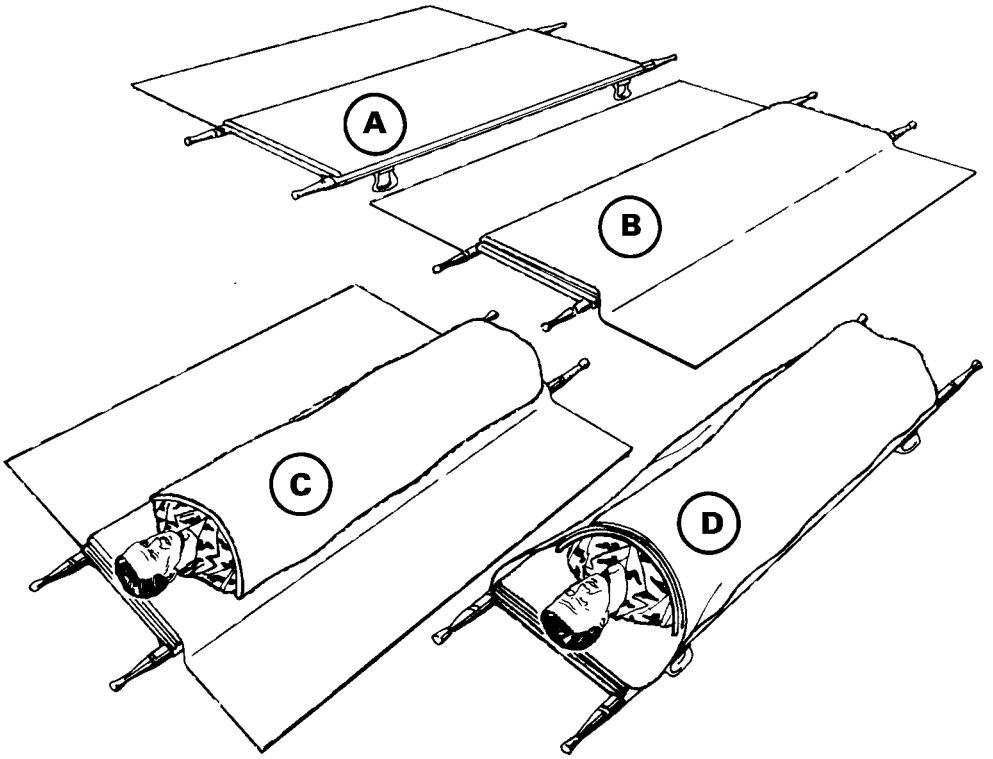

Figure 9-14. Dressing the litter with three blankets

9-4. Using Patient Securing Straps

After the patient is placed on the dressed litter and covered, the patient securing straps are used to hold him in position. The number of straps and the body parts over which they should be placed depend upon the type of terrain over which the patient is to be carried (Figure 9-15).

- If only two straps are necessary, put one strap across the chest and one across the legs, just below the knees. Extend the straps under the litter and buckle them against the litter pole.

- If the terrain is rough, apply two additional straps. One is placed across the waist and the other across the thighs. Again, extend them under the litter and buckle them against the litter pole.

- If the patient is being carried either up or down steep slopes, use the two additional straps to secure each thigh to the litter separately. Take one strap over one thigh, under the other thigh, then under the litter, and buckle it against the litter pole. Take the remaining strap and secure the opposite thigh in the same manner.

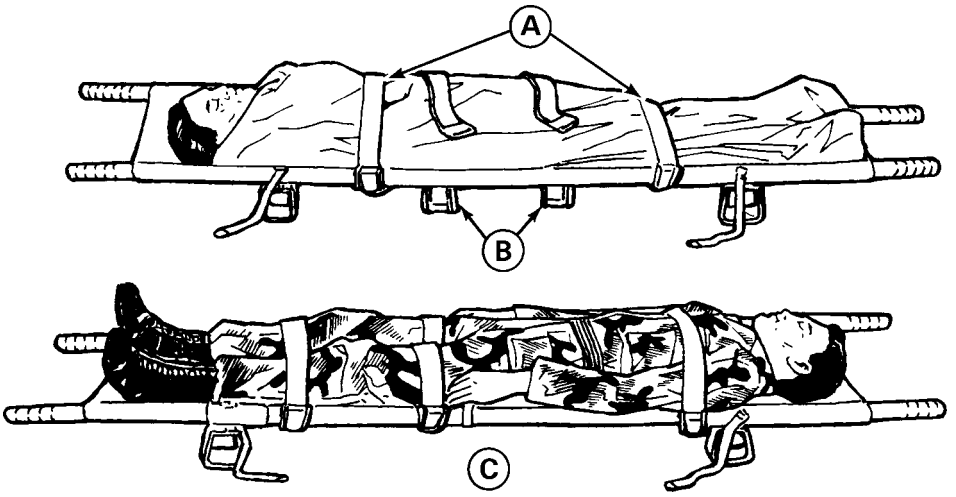

Figure 9-15. Using patient securing straps.

9-5. General Rules for Litter Bearers

a. In addition to the bearer rules addressed in paragraph 8-3, the following rules also apply:

(1) In moving a patient, the litter bearers must make every movement deliberately and as gently as possible. The command STEADY should be used to prevent undue haste.

(2) The rear bearers should watch the movements of the front bearers and time their movements accordingly to ensure a smooth and steady action.

(3) The litter must be kept as level as possible at all times, particularly when crossing obstacles, such as ditches.

(4) Normally, the patient should be carried on the litter feet first, except when going uphill or upstairs; his head should then be forward. If the patient has a fracture of a lower extremity, he should be carried uphill or upstairs feet first and downhill or downstairs head first to prevent the weight of the body from pressing upon the injured part.

(5) When the patient is loaded on a litter, his individual equipment is carried by two of the bearers or placed on the litter.

b. Procedures for litter evacuation training and techniques are provided in Appendix J.

9-6. Use of Spine Boards and the Kendricks Extrication Device

Spine boards and the KED aid in rescuing and immobilizing patients with known or suspected spinal fractures. Spine boards can be prefabricated from plywood or any suitable material (Figure 9-16).

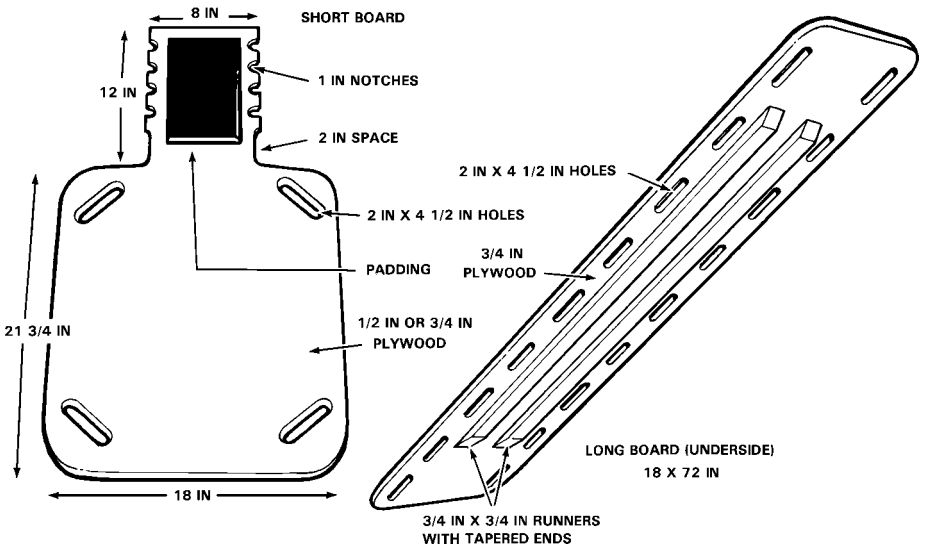

Figure 9-16. Prefabricated spine boards (short and long).

a. Short Spine Board. When a patient has a fracture or suspected fracture of the neck, the short spine board is applied from the waist up to immobilize the upper spine before moving him (Figure 9-17). The patient is then lifted onto a long spine board (*c* below). To apply the short spine board, the bearers assemble the required items: a short spine board, a cervical collar, two 6-foot patient securing straps, and a cravat. If an item is not available, the bearers should improvise it from any available material.

(1) Bearer number 1 places his hands on each side of the patient's head and jaws. He then applies slight upward traction to the neck while bearer number 2 inserts a cervical collar around the patient's neck.

(2) Bearer number 1 maintains a slight upward traction while bearer number 2 inserts the short spine board behind the patient's back. He then applies the cravat and the two patient securing straps (Figure 9-17) in the following order:

(*a*) *Cravat*. The center of the cravat is placed across the patient's forehead with the middle of the cravat covering the hairline. The ends are inserted into the bottom notches of the board and are tied in the back.

(*b*) *First strap*. The buckle of the first patient securing strap is placed in the patient's lap and the other end is passed through the lower hole in the board. It is brought up the back of the board, through the top hole, under the armpit, over the shoulder, and across the back of the board at the neck. The end is then attached to the second strap.

(*c*) *Second strap*. The second patient securing strap is buckled to the first one, letting the buckle rest on the side of the board at the neck. The other end of the second strap is passed over the shoulder, under the armpit, through the top hole in the board, down the back of the board, and through the lower hole. It is then taken across the patient's lap, where it is secured in place by buckling it to the first strap.

NOTE

If available, bearer number 2 will apply a rigid cervical collar.

Figure 9-17. Application of short spine board.

b. Kendricks Extrication Device. The KED (Figure 9-18) is a prefabricated flexible type of short spine board. It is useful in extricating a patient suspected of having spinal injuries, especially if the patient is in the sitting position.

(1) Bearer number 1 maintains cervical traction until KED has been completely applied.

(2) Bearer number 2 applies a rigid cervical collar, places the KED behind the patient, puts a cushion behind the patient's head to align the KED, fastens the trunk straps, then the leg/hip straps, and then the forehead strap and chin strap.

(3) Bearer number 3 ties the hands of the patient together and places the patient on the long board.

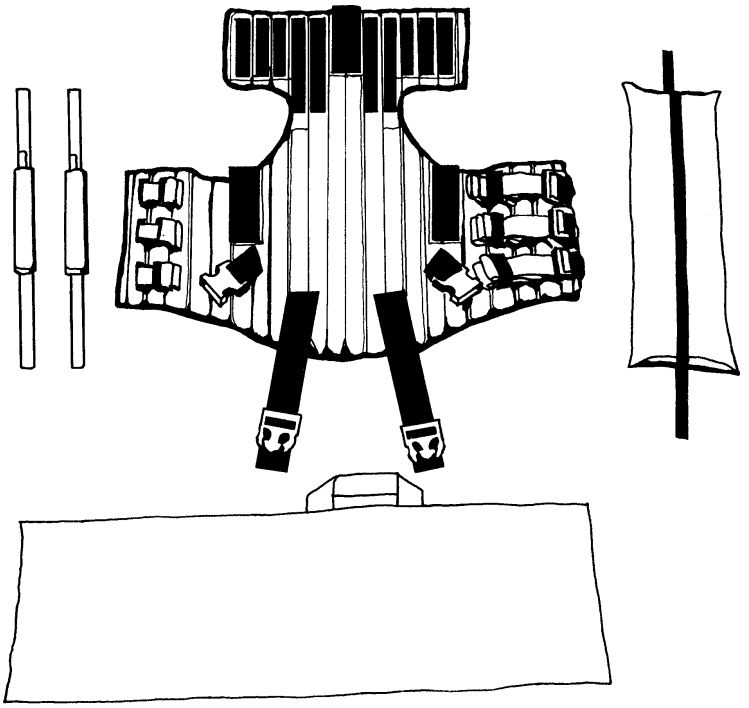

Figure 9-18. Kendricks extraction device.

c. Long Spine Board. When a patient has a fracture or suspected fracture of the back as well as the neck (*a* above), he is placed on a long spine board (Figures 9-19 and 9-21). To apply the long spine board, the bearers assemble the required items: a long spine board, four 6-foot patient securing straps, a cravat, and four pieces of padding. If an item is not available, the bearers should improvise it from any available material.

(1) The bearers place the spine board beside the patient. They align it with his body. They then place padding on the board at the points where the patient's neck, small of the back, knees, and ankles will rest.

(2) Bearer number 1 kneels at the patient's head. He places his hands on each side of the patient's head and jaws, immobilizing the head and neck and applying slight traction (Figure 9-19). Bearers numbers 2, 3, and 4 kneel on one side of the patient and place their hands on the opposite side at the patient's shoulder and waist, hip and thigh, knee and ankle (Figure 9-20).

Figure 9-19. Positioning of hands.

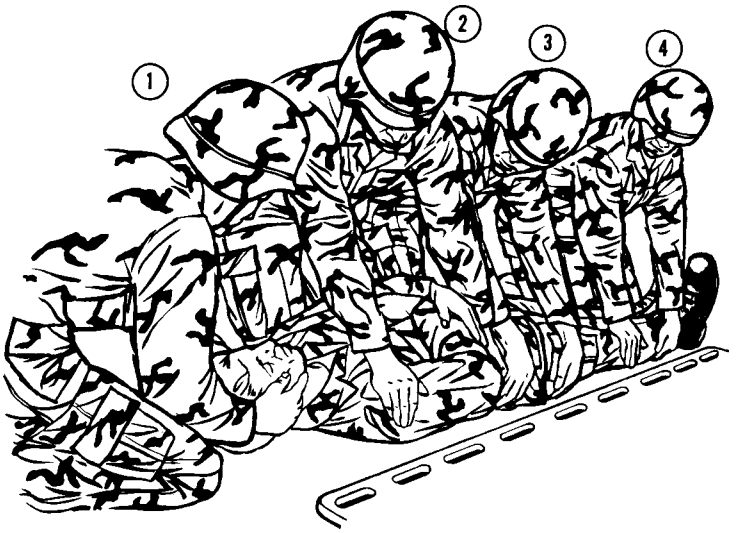

Figure 9-20. Positioning of litter bearers

(3) Bearers numbers 2, 3, and 4 roll the patient's body slightly toward them as bearer number 1 turns the patient's head, keeping it in a straight line with the spine.

(4) Bearer number 3 reaches across the patient's body with one hand, grasps the board at the nearer edge and slides it against the patient. Bearer number 3, with the same hand, reaches across the board to the farther edge and holds the board in place. All the bearers then slowly roll the patient backward onto the board, keeping the head and spine in a straight line.

(5) While bearer number 1 continues to apply slight traction to the neck, bearers numbers 2, 3, and 4 immobilize the patient by applying the cravat and four patient securing straps (Figure 9-21) in the following order:

(*a*) *Cravat*. The center of the cravat is placed over the patient's forehead with the middle of the cravat covering the hairline. The ends are then extended straight across and inserted through the nearest holes on each side of the board.

(*b*) *First strap*. One end of the first patient securing strap is inserted through the board hole near the chest, across the chest, and through the hole on the opposite side. It is then brought back across the arms and buckled to the other end of the strap. The buckle rests on the top of the board, not against the patient.

(*c*) *Remaining straps*. The three remaining straps are applied: one across the hips, one above the knees (not over the kneecaps), and one above the ankles. One end of each strap is inserted through the board hole near the body part and buckled to the other end of the strap. The buckle rests on the top of the board, not against the patient.

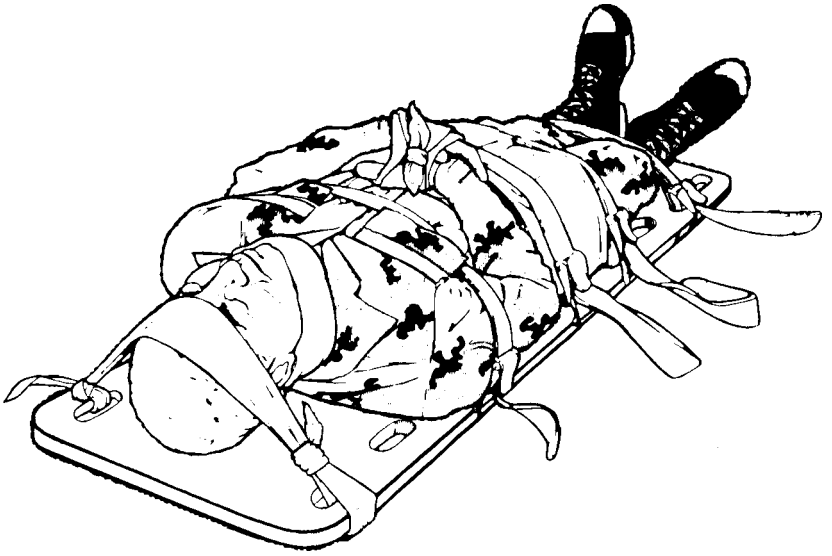

Figure 9-21. Patient secured on a long spine board.

9-7. Travois

A travois is a crude sled lashed to a horse or similar animal and dragged along the ground. It can also be lashed between two animals in single file and carried level. The sled is made from two long poles fastened together by two crossbars and a litter bed fastened to the poles and crossbars. The patient is secured on the litter bed. If the sled is pulled by only one animal, the bearers lift the dragging end from the ground when going uphill, fording streams, or crossing obstacles. To make a travois—

a. Cut two poles about 16-feet long (one pole should be 8- to 10-inches longer than the other). Ensure that the small ends are at least 2 inches in diameter. Then cut two crossbars which are about 3-feet long.

b. Lay the poles parallel to each other. They should be placed about 2½ feet apart with the larger ends to the front. If only one animal is used, let the smaller ends spread apart about 3 feet and have one of the small ends project 8 to 10 inches beyond the other one. This results in a rocking motion, rather than a jolting motion to the patient.

c. Notch the poles and the crossbars so that the poles can be connected with one crossbar about 6 feet from the front end and the other crossbar about 6 feet to the rear of the first one. Fit the notches in the crossbars and poles together and lace them securely in place.

d. Make a litter bed 6-feet long between the crossbars. This is done by fastening a blanket, canvas, or similar material securely to the poles and crossbars.

NOTE

A rope or strap may be stretched diagonally from pole-to-pole, letting it cross many times to form a base for an improvised bed. A litter or cot may also be fastened between the poles for the same purpose.

e. If only one animal is used, securely fasten the front ends of the poles to the saddle of the animal. Leave the other ends of the poles on the ground (Figure 9-22).

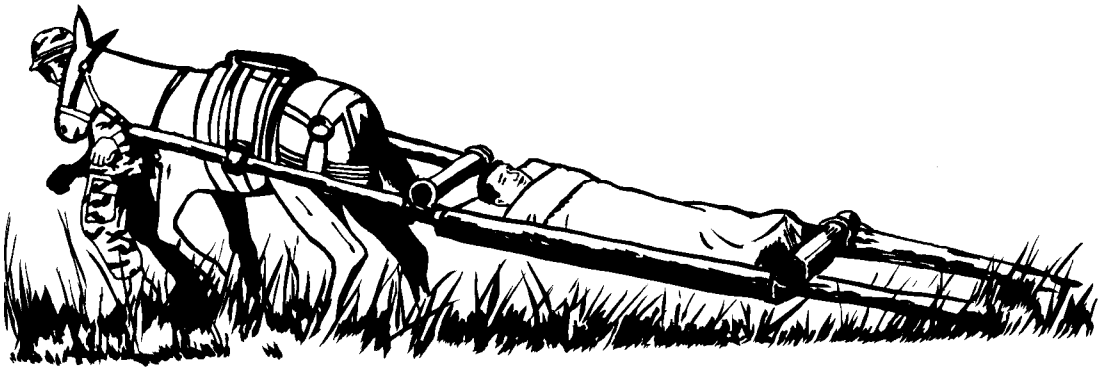

Figure 9-22. Travois used with only one animal.

f. If two animals are used, securely fasten the front ends of the poles to the saddle of the lead animal and the other end of the poles to the saddle of the animal which follows (Figure 9-23).

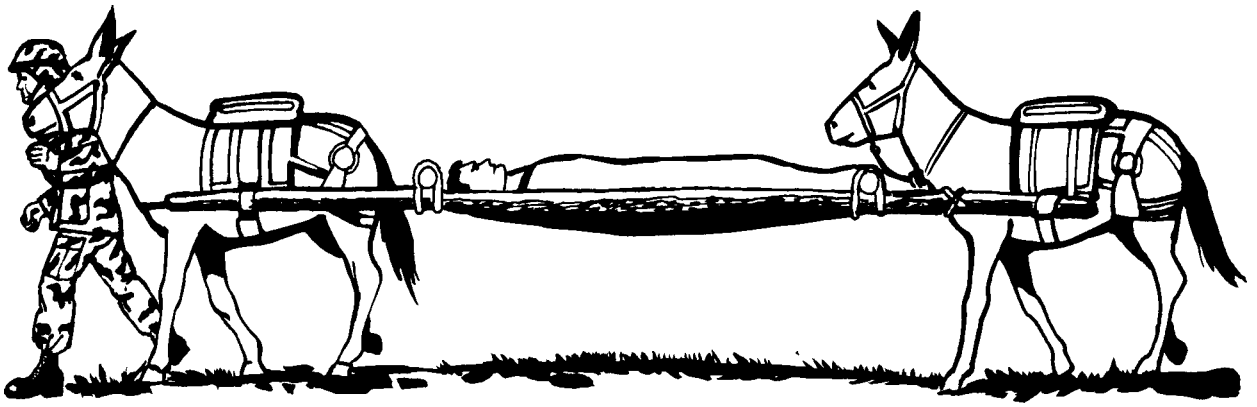

Figure 9-23. Travois used with two animals

9-8. Packsaddle Litter

A packsaddle litter can be improvised by fitting a suitable litter onto the packsaddle of a mule or other animal (Figure 9-24). This technique is particularly useful in jungle and mountain areas where it may be necessary to carry a litter patient for a long distance.

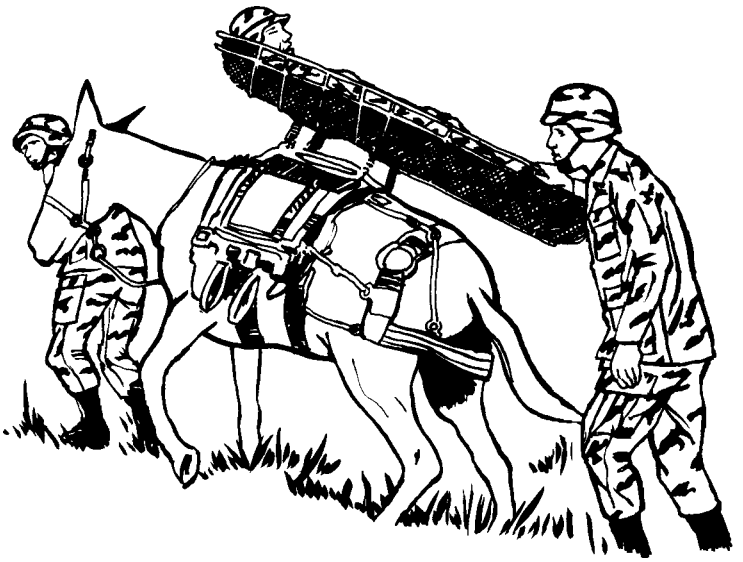

Figure 9-24. Packsaddle litter.

9-9. Litter Evacuation in Mountain Operations

a. Personnel assigned to litter squads for mountain service must be trained in—

- Rock climbing.
- Use of ropes.
- Individual and unit movements at high altitudes.

b. Because of the conditions in mountain operations, a litter squad is normally increased from four to six men.

c. For additional information on medical evacuation over mountainous terrain, refer to paragraphs 5-2, 9-12 through 9-13, and E-15.

9-10. Techniques for Litter Evacuation in Mountain Operations

The evacuation techniques used in mountain operations are well proven. They are, however, subject to improvement and should be modified as better methods of patient handling are developed. When evacuating a patient from mountainous areas—

a. Select the smoothest available route.

b. Keep the patient as warm as possible and avoid unnecessary handling.

c. Place the patient's helmet on his head for protection from falling rocks.

d. If the evacuation route is long and difficult to travel, a series of litter relay points or warming stations should be established. Warming stations, if established, should be staffed with medical personnel to permit proper treatment of shock, hemorrhage, or other emergency conditions.

e. If a patient develops new or increased signs of shock while being evacuated, he should be treated and retained at one of the warming stations until his condition stabilizes and permits further evacuation.

9-11. Types of Litters for Mountain Operations

There are four types of litters available for evacuation of casualties over rough mountain terrain. They are the standard collapsible litter (Figure 9-1); the poleless semirigid litter (Figure 9-4); the Stokes litter (Figure 9-6); and the SKED litter (Figure 9-7). When using the standard collapsible litter and patient securing straps are not available, it is necessary to secure a patient to the litter with a rope.

9-12. Methods of Litter Evacuation in Mountain Operations

Several litter evacuation methods that are adaptable to mountain terrain and climatic conditions are discussed.

a. Modified Travois (*Descending*) (*Figure 9-25*). This method is used when descending relatively smooth slopes. Considerable speed can be made on slopes and cliff faces which are 4- to 6-feet high. These areas can be passed without much difficulty.

(1) Two poles about 18 feet long and about 3 inches in diameter at the large end are cut. These poles are fastened to the litter stirrups. About 5 to 10 feet of these poles should extend beyond the litter to serve as runners.

(2) One bearer supports the foot of the litter by a rope sling and guides the litter downhill. Another bearer uses a rope to lower the patient and the litter. A third bearer assists the soldier holding the rope and relieves him at frequent intervals.

Figure 9-25. Modified travois (*descending*).

b. Modified Travois (*Ascending Steep Slope*) (*Figure 9-26*). The litter is prepared as a modified travois.

(1) A thin sapling is passed through the litter stirrups at the head of the litter. The poles should extend about 18 inches on each side of the litter. The use of poles affords a more secure grip for the bearers at the head of the litter.

(2) Two bearers take their places at the head of the litter. A third bearer, using an improvised rope sling, takes his place at the foot of the litter.

(3) The fourth and fifth bearers take their positions along the rope extending from the head of the litter. The sixth bearer handles the end of the rope.

Figure 9-26. Modified travois (*ascending steep slope*).

(4) At the command UP ROPE, the fourth, fifth, and sixth bearers pull on the rope while the first, second, and third bearers lift the litter and climb slowly. The bearers carrying the litter should not try to do all the work. They should allow themselves to be pulled up the slope as they hold the litter off the ground and climb. The position of the bearers should be rotated at each halt to lessen fatigue.

c. Modified Travois (*Descending Steep Slope*) (*Figure 9-27*). In making a descent, the most direct passage should be taken. The litter is prepared is a modified travois.

(1) Two bearers hold the rope to assist in lowering the litter.

(2) Three bearers take positions at the litter: two at the head and one at the foot.

Figure 9-27. Modified travois (*descending steep slope*).

(3) The sixth bearer may assist with the foot of the litter or he may precede the team to—

- Pick out a trail, thus preventing the squad from having to retrace its steps should there be a cliff ahead.

- Make the passage more negotiable by clearing away shrubs and vines.

d. Modified Travois (*Lowered from Cliff*) (*Figure 9-28*). If a cliff is too extensive to bypass, the portion with the smoothest face is selected for descending. The litter is prepared as a modified travois. (If using a SKED litter, follow manufacturer's instructions for lacing the litter.)

(1) Notches are cut in the poles to provide an indentation for tying the ropes, thus preventing them from becoming frayed by the stone cliff.

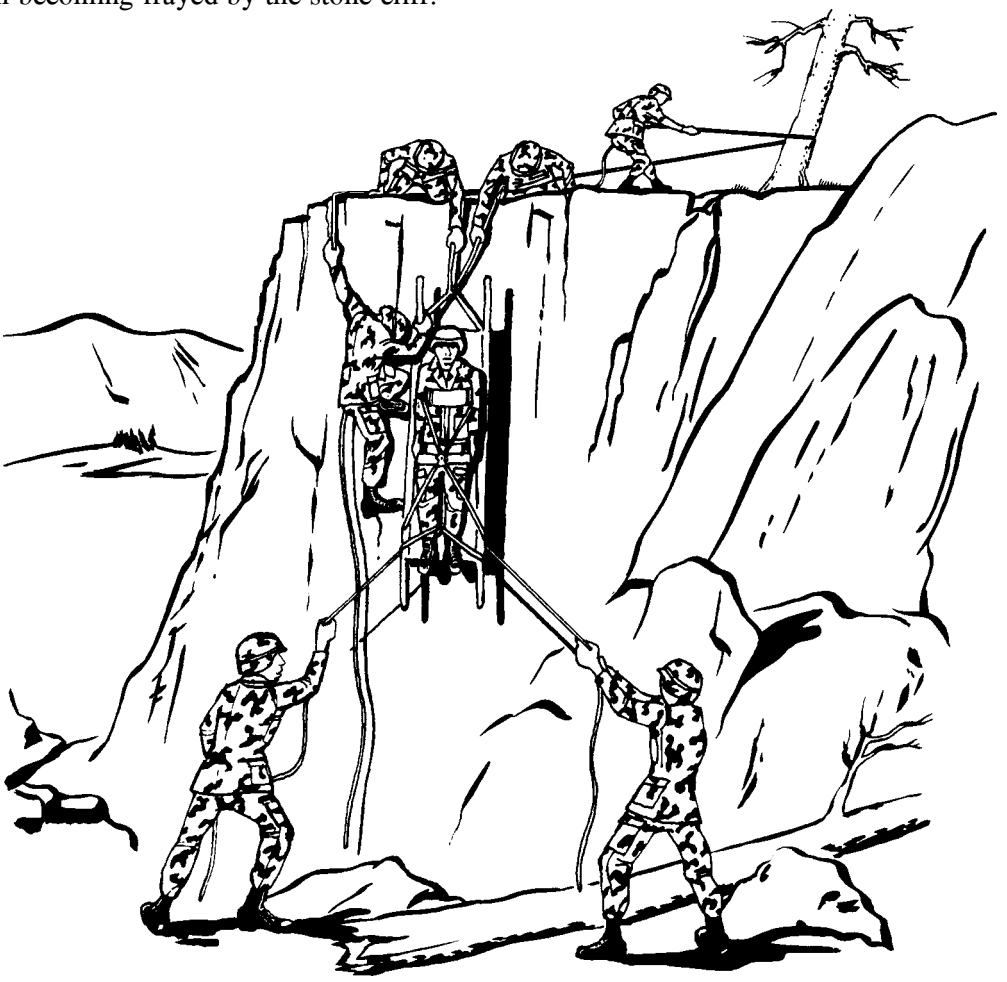

Figure 9-28. Modified travois (*lowered from cliff*).

(2) Ropes are lashed to the stirrups at the foot of the litter to serve as guys in keeping the litter from revolving.

(3) After one bearer secures the rope around a tree or large boulder, two bearers lower the litter over the cliff's edge.

(4) One bearer descends the cliff's face on a rope, moving parallel to the litter and assisting the litter over any projections.

(5) The two remaining bearers hold the guy ropes and guide the litter from the foot of the cliff. When the litter has almost reached the base of the cliff, they ease it to the ground.

9-13. Horizontal Hauling Line

The horizontal hauling line (Figure 9-29) is also a method of evacuation. It is addressed in a separate paragraph because of its complexity. The horizontal hauling line is used in those cases where a steep slope or cliff must be scaled and where, at the same time, there is an intervening obstacle such as a swiftly running mountain stream. It can also be used to span a chasm when a bridge has been demolished. This method should be used only where there will be a considerable number of patients (a warming station or collecting point) and should not be installed for the evacuation of only one or two patients. It can also be used to lower or to raise patients over obstacles. The installation and operation of the hauling line is addressed below.

- This apparatus is a continuous rope cableway secured by a system of snaplinks spanning a maximum of 1,000 feet between terminals. A slope of at least 10 degrees is required for proper operation.

- A Stokes litter containing the patient is suspended from the top of the cable at the upper terminal and an empty litter is suspended from the bottom of the cable at the lower terminal.

- The litter patient at the upper terminal is lowered by gravity to the lower terminal. A relay line attached to the litter prevents it from rapidly and uncontrollably descending. At the same time, the empty litter at the lower terminal is raised to the upper terminal ready to receive the next patient.

- One bearer stands at the upper terminal to control the relay line and another bearer stands at the lower terminal ready to receive the patient.

a. Installation. The horizontal hauling line is installed in four steps:

(1) By means of a bowline, secure a 10-centimeter manila rope to a tree far enough from the edge of the cliff (2 to 3 meters) to permit freedom of movement by the medical personnel.

(2) On the opposite side, pass the other end of the rope around another fixed point (tree, boulder, or vehicle) and make a transport knot to pull the rope as taut as necessary. All traverse ropes should have a certain amount of slack. When manila or sisal rope is used, a 5-percent sag should be allowed to avoid undue fatigue in the rope.

(3) To suspend the litter, place two snaplinks on the traverse rope and attach one long litter carrying strap to each. Attach an upper and lower retrieving rope to either the litter stirrup or to the respective snaplinks. In the latter case, the loose ends of each rope are tied together above the center of the litter so that, when drawn up or down, both snaplinks move simultaneously.

(4) After the patient has been secured to the litter, the litter is raised, and the litter carrying straps or suspension ropes are passed through the stirrups and fastened together or else secured to the opposite stirrup.

b. *Operation*. The horizontal hauling line is operated as follows:

(1) For the ascent, three men can easily raise the litter along the traverse by pulling on the upper retrieving rope. The pull should be steady and smooth in order to prevent jolting and swaying.

(2) For the descent, a gentle pull on the lower retrieving rope is enough to break the inertia and let gravity do the rest. During the descent, the men on the upper side should control the speed of the descent through their retrieving rope. It may be necessary to pull the patient the last few meters when the litter nears the low point of the slack in the traverse rope.

c. Refer to TC 90-6-1 for additional information on the construction of a horizontal hauling system.

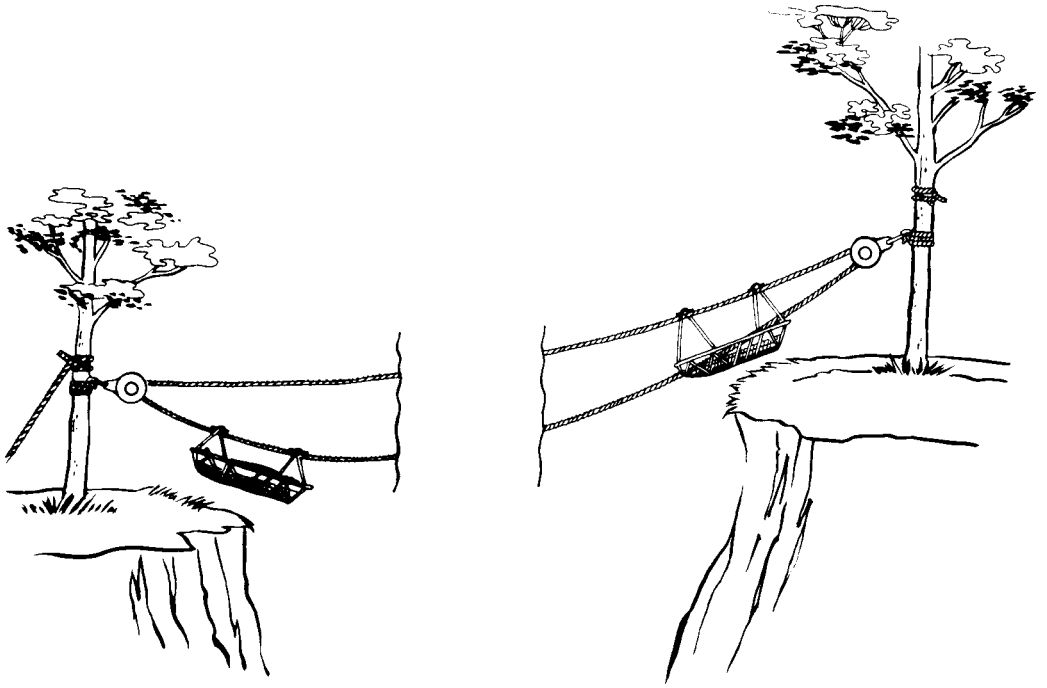

Figure 9-29. Evacuation by horizontal hauling line.

CHAPTER 10

EVACUATION PLATFORMS

Section I. ARMY GROUND AMBULANCES

10-1. General

a. Ground ambulances are vehicles designed for or converted to carrying patients. They are dedicated assets to be used solely for the medical mission. They are organic to CHS units that evacuate sick, injured, and wounded soldiers by ground ambulance. These vehicles are equipped with an MES designed for use in these ambulances.

b. They are staffed with a driver/medical aidman and an additional medical aidman who are both qualified in basic EMT procedures. Track ambulances are staffed with three medical personnel (ambulance driver, track commander, and medical aidman).

NOTE

The third medic may not be present on the MTOE. This position may be staffed by US Army Reserve personnel.

This paragraph implements STANAG 2931.

c. The Geneva Conventions stipulate that ground ambulances be clearly marked with the distinctive emblem (red cross on a white background). To camouflage or not display this emblem will result in the loss of the protections afforded under these conventions. Guidance on the camouflage of medical units, vehicles, and aircraft on the ground is contained in STANAG 2931.

10-2. Ground Ambulances

Vehicles designed or modified as ambulances include field (wheel) ambulances, the bus ambulance, and the M113 (track) armored personnel carrier.

a. Military field ambulances, designed for use by field units, operate on paved and secondary roads, trails, and cross-country terrain. Field ambulances operating in the forward areas of the CZ must possess mobility and survivability comparable to the units being supported. Current field ambulance variations include the M1010, HMMWV (M996 and M997), and M113. These ambulances are normally used to evacuate patients from frontline units to BASs.

b. The bus ambulances are useful in transporting large numbers of patients within EAC.

c. The M113, when configured with a litter kit, an NBC kit, and an MES, is classified as a standard evacuation vehicle and is therefore included in this section on ground ambulances.

10-3. Ambulance Driver

The ambulance driver/medical aidman is responsible for the ambulance at all times. He performs driver maintenance on the vehicle and is responsible for reporting major deficiencies to his section chief or supervisor. The ambulance driver/medical aidman is an MOS-qualified medic; if required, he can perform emergency medical intervention and provide EMT. The driver's responsibilities include—

- Providing maximum safety and welfare for the patients entrusted to his care. This includes ensuring that the patient is secured to the litter prior to loading.

- Ensuring operational readiness and responsiveness. This is accomplished by maintaining and being able to use the authorized equipment aboard the ambulance. This equipment includes—

  - Litters.
  - Blankets.
  - Splints.
  - Medical expendables.
  - Oxygen canisters.
  - Flashlights.
  - Auxiliary fuel.
  - Decontamination equipment.
  - Special medical materials and equipment.

- Ensuring he has the required information, tools, and equipment to navigate to the pick-up location. (This includes a map, tactical overlays, map coordinates, compass, and when available, position locator equipment.)

NOTE

When traversing open terrain (such as in a desert) with few distinguishable landmarks, strip maps are ineffective.

- Preparing the ambulance for loading and unloading.
- Assisting the litter bearers in the loading and unloading of patients.
- Performing property exchange when patients are loaded or unloaded.
- Providing emergency transport of medical personnel, medical supplies, and blood and blood products.
- Acting as a messenger in medical channels.

10-4. Medical Aidman

The medical aidman acts as the assistant driver and his duties include—

- Becoming familiar with the condition of each patient being evacuated and reviewing the information on the FMC.
- Coordinating with the individual in charge for any special instructions in the care and treatment of the patients en route.
- Providing EMT as required.
- Making periodic checks of patients while en route.
- Supervising and assisting in the proper loading and unloading of the ambulance.
- Assisting the driver with land navigation and guiding the driver when backing or moving off roads, or when under blackout conditions.

10-5. Ambulance Loading and Unloading

In loading and unloading ambulances, litter patients are moved carefully. Details of the loading and unloading procedures vary slightly depending on the number of bearers, the presence or absence of a medical aidman, and the type of vehicle used.

a. General Procedures.

- Patients are normally loaded head first. The exception is if the nature of the patients' injuries make this inadvisable. They are less likely to experience motion sickness or nausea with the head in the direction of travel. They also experience less noise from the opening and closing of rear doors. Further, there is less danger of injury to the patients if a rear-end collision occurs.

- When a patient requires en route care for an injury to one side of his body, it may be necessary to load him feet first to make the injured side readily accessible from the aisle. Patients with wounds of the chest or abdomen, or those receiving IV fluids are loaded in lower berths to provide gravity flow. For ease of loading and patient comfort, those patients wearing bulky splints should be placed on lower berths, if possible.

b. Instructional Procedures. For loading and unloading the ambulances, the litter bearers are numbered and formal commands are given so that each individual can learn his particular job and work as a team.

(1) *Loading procedures*. The sequence for loading four litter patients in the berths is *upper right, lower right, upper left,* and *lower left*. The most seriously injured are loaded last so they will be the first to be off-loaded. A three-man squad is required to load and unload the ambulance.

(2) *Unloading procedures*. The sequence for unloading the ambulance is the reverse of the loading procedures: *lower left, upper left, lower right*, and *upper right*. A three-man squad is needed to unload the ambulance.

10-6. Truck, Ambulances, 4x4, Utility, M996 and M997

The M996 and M997 ambulances are tactical vehicles designed for use over all types of roads, as well as cross-country terrain. It can also operate in all weather conditions (Figure 10-1). These ambulances are diesel-powered and equipped with four-wheel hydraulic service brakes. The ambulances can be heated and ventilated. Only the M997 can be air-conditioned. Supplemental electrical power to operate the life support equipment is also available. For operations in an NBC environment, the M996 and M997 ambulances are equipped with a gas-particulate filter unit (GPFU).

a. Patient Carrying Capacities. Refer to Table 10-1 for the various patient carrying capacities.

b. Two-Litter Configuration, M996. The sequence for loading patients in the berths is *right* first, then *left*. The most seriously injured patient is loaded last so that he is the first to be taken out of the ambulance. The sequence for unloading is the reverse of loading.

NOTE

The numbers used in the explanation of the figures correspond to the parts/equipment represented in the graphic.

(1) *Assembling litter rail extension* (*Figures 10-2 and 10-3*).

(*a*) Turn latch (1) counterclockwise and open stowage compartment door (2).

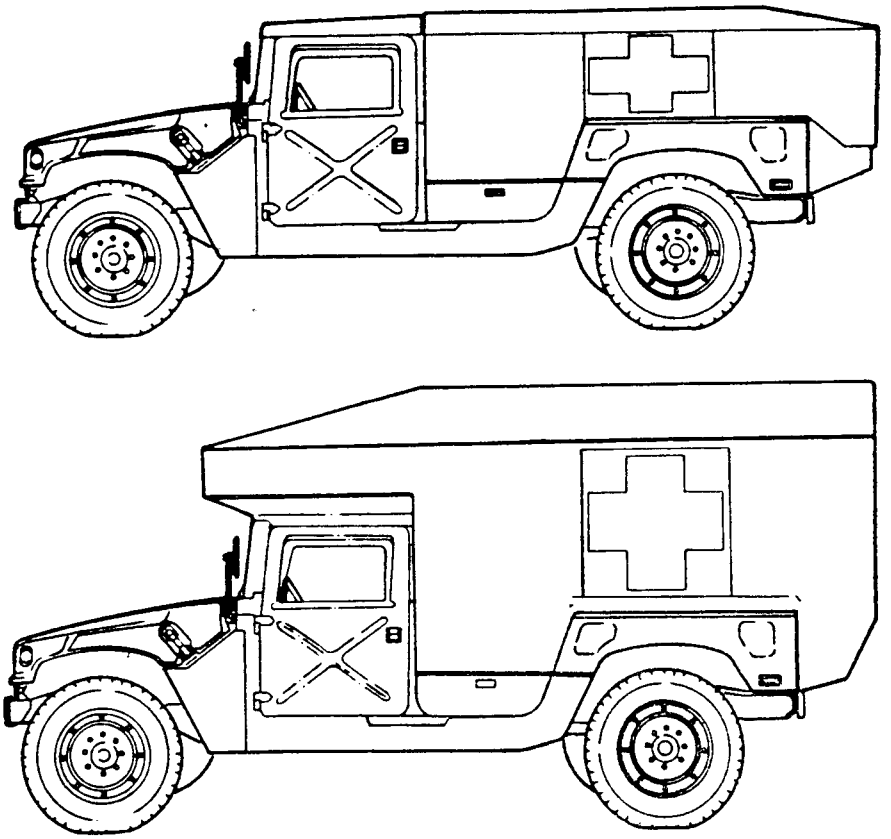

Figure 10-1. Truck, ambulances, 4x4, utility (M996 and M997).

Table 10-1. Patient Carrying Capacities

TRUCK, AMBULANCE, 4X4, 2 LITTER, UTILITY (M996)	TRUCK, AMBULANCE, 4X4, 4 LITTER, UTILITY (M997)
2 LITTER PATIENTS	4 LITTER PATIENTS
6 AMBULATORY PATIENTS	8 AMBULATORY PATIENTS
1 LITTER AND 3 AMBULATORY PATIENTS	2 LITTER AND 4 AMBULATORY PATIENTS

(*b*) Loosen and disconnect securing strap (3) and remove folded litter rail extension (4) from stowage compartment (5).

(*c*) Pull left and right rails (6) apart and let legs (11) drop down. Ensure feet (12) are flat on ground.

(*d*) Lock support braces (13) and adjust straps (14) as necessary.

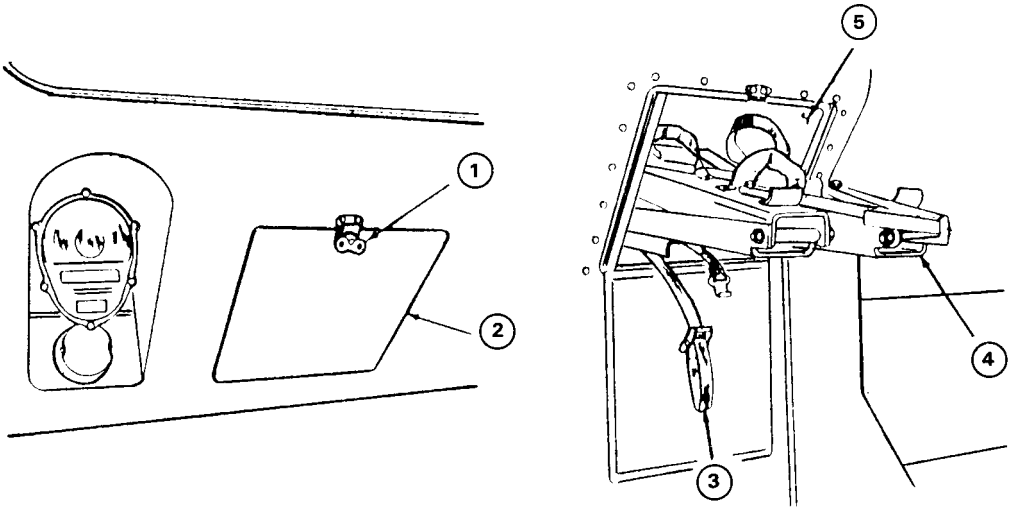

Figure 10-2. Litter rail extension stowage compartment, M996.

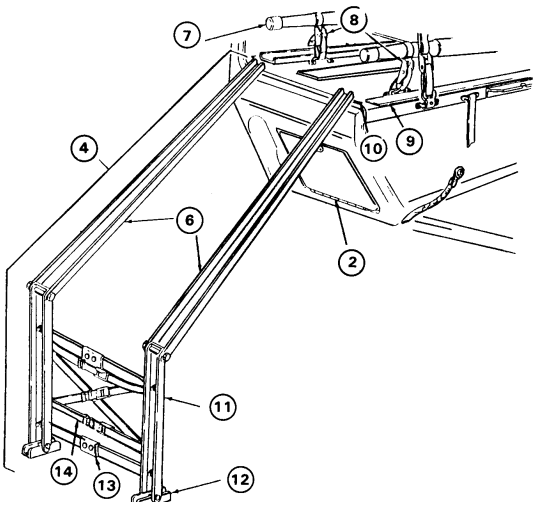

Figure 10-3. Litter rail extension.

(2) *Loading litters on litter rack* (*Figure 10-3*).

(*a*) Secure both rails (6) of litter rail extension (4) into slots (10) on litter rack (9).

(*b*) Place litter (7) on litter rail extension (4).

WARNING

Ensure straps and equipment do not inhibit litter loading operations. Load litters carefully to prevent patient injury.

(*c*) Slide litter (7) onto litter rack (9).

(*d*) Secure litter (7) to litter rack (9) with front and rear litter handle straps (8).

(3) *Unloading litters from the litter rack* (*Figure 10-3*).

(*a*) Release front and rear litter handle straps (8) securing litter (7) to litter rack (9).

(*b*) Secure both rails (6) of litter rail extension (4) into slots (10) on lower litter rack (9).

(*c*) Slide litter (7) from lower litter rack (9) onto litter rail extension (4). Lift up and remove litter (7) from litter rail extension (4).

(4) *Fold and stow litter rail extension* (*Figures 10-2 and 10-3*).

(*a*) Unlock support braces (13).

(*b*) Fold left and right rails (6) together.

(*c*) Fold left and right litter rail legs (11) and feet (12) against rails (6).

(*d*) Place folded litter rail extension (4) into stowage compartment (5) and secure with strap (3).

(*e*) Close door (2) and turn latch (1) clockwise to secure door (2).

(5) *Opening patient seat to accommodate ambulatory patients* (*Figures 10-4 and 10-5*).

(*a*) Ensure litters are in stowed position.

(*b*) Pull out and up on seat latch handle (5) and remove latch (7) from catch (6).

(*c*) Lift seat back (4) to open position and fold seat back support (2) into recesses between seat cushions (9).

(*d*) Ensure that seat braces (8) are fully extended and locked in position.

(6) *Closing the patient seat to accommodate litter patients* (*Figures 10-4 and 10-5*).

(*a*) Press lock buttons (12) on seat braces (8) and fold braces (8) toward seat back (4).

(*b*) Fold seat back support (2) outward and fold seat back (4) into closed position. Ensure that guide pins (11) on seat back support engage holes (10) in seat base (3).

(*c*) Install seat back (4) to seat base (3) with seat latch (7) and secure with latch handle (5). If necessary to ensure security of seat back (4), adjust seat latch (7) to proper length by turning clockwise or counterclockwise.

c. Four-Litter Configuration, M997. The sequence for loading four litter patients in the berths is *upper right, lower right, upper left*, and *lower left*. The most seriously injured patients are loaded last so they are the first to be taken out of the ambulance.

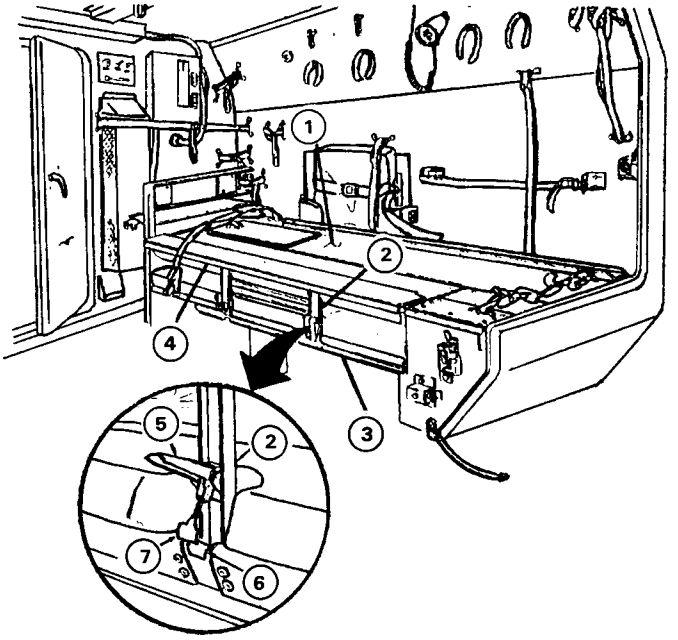

Figure 10-4. Litter rack (*ambulatory patient seat down position*).

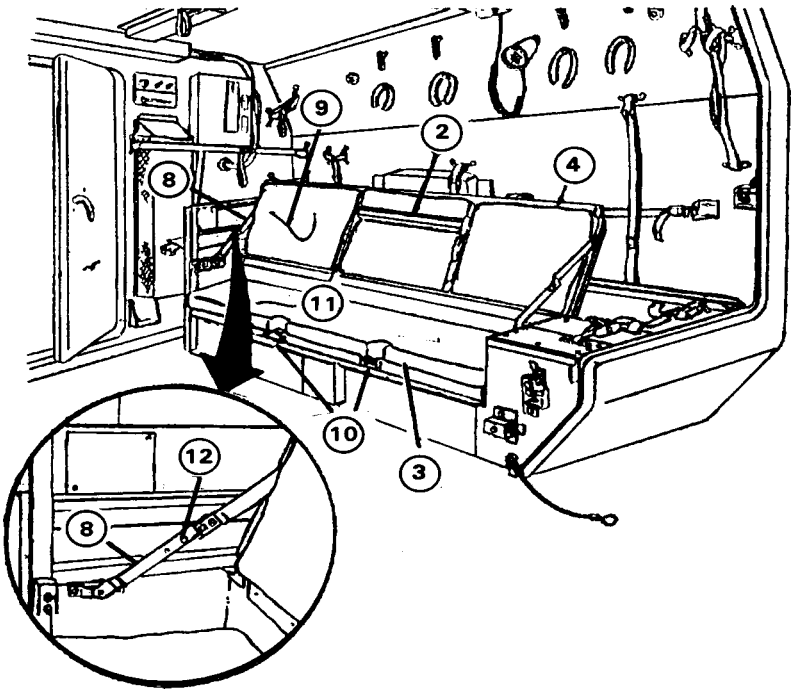

Figure 10-5. Litter rack (ambulatory patient seat open position).

The sequence for unloading is the reverse of the loading procedure: *lower left, upper left, lower right, and upper right. When only two litter patients are to be loaded, the upper and lower right side berths are used.* Using the two right side berths leaves the left side unoccupied for use in transporting ambulatory or *additional litter patients*.

NOTE

When patients are picked up from several locations, the loading sequence of least seriously injured patient to most seriously injured patient cannot always be applied. *A previously loaded patient should not be unloaded in order to maintain the loading sequence.* The receiving MTF must be made aware of the most seriously injured patients.

WARNING

When loading more than two litter patients, the upper litter rack patients must be loaded first. Injury may result if litter patients are loaded in lower rack first.

(1) *Preparing the upper litter rack* (*Figure 10-6*).

(*a*) Unhook tension strap (23) from footman loop (30) on lower litter rack (9).

(*b*) Pull out upper litter rack handle (17) and support weight of upper litter rack (21).

WARNING

The rear end of the upper litter must be supported before releasing the suspension strap hook. Injury to personnel may result if rear end of upper litter is not supported.

(*c*) Unhook rear suspension strap hook (27) from loop (22) on upper litter rack (21). Clip suspension strap hook (27) to eye (26).

(*d*) Release litter support latch stop (25), push latch (24) in, and lower upper litter rack (21) onto lower litter rack (9).

(*e*) Slide litter rack handle (17) into upper litter rack (21).

(2) *Assembling litter rail extension* (*Figures 10-3 and 10-7*).

(*a*) Turn latch (1) counterclockwise and open stowage compartment door (2).

(*b*) Loosen and disconnect securing strap (3) and remove folded litter rail extension (4) from stowage compartment (5).

(*c*) Lift tray (15) slightly and push in tray supports (16) to lower tray (15) for access to stowed litters.

(*d*) Pull left and right rails (6) apart and let legs (11) drop down. Ensure feet (12) are flat on ground.

(*e*) Lock support braces (13) and adjust straps (14) as necessary.

(3) *Loading litters on upper litter racks* (*Figures 10-6 and 10-8*).

(*a*) Secure both rails of litter extension (4) into slots in upper litter rack (21).

(*b*) Place litter (18) on litter rail extension (4).

(*c*) Slide litter (18) up rails (4) until litter (18) is clear of litter rail extension (4).

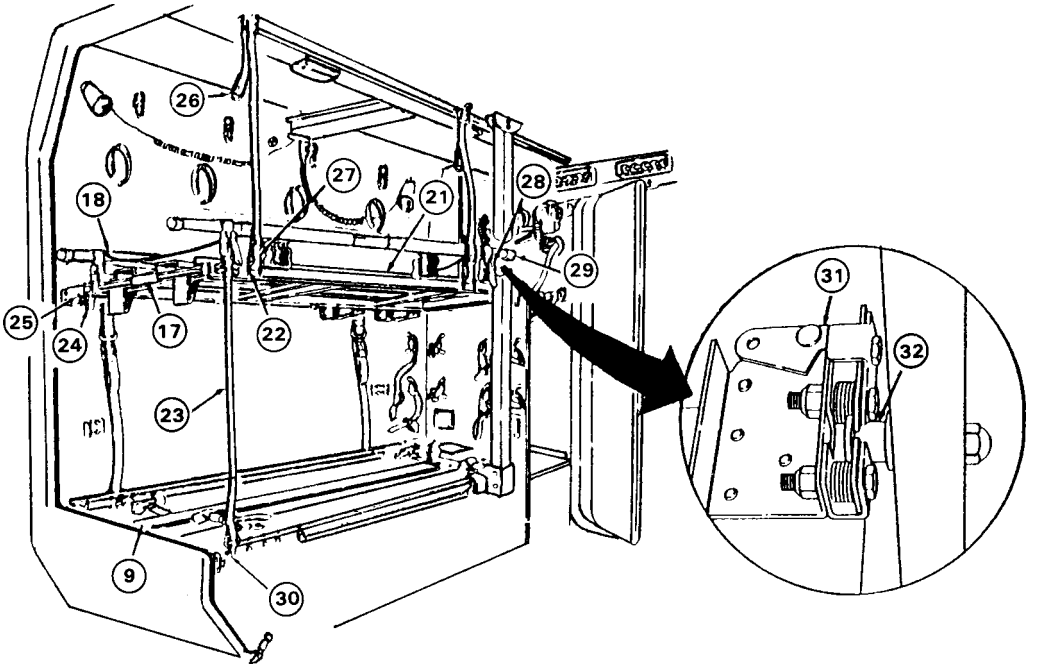

Figure 10-6. Interior, M997.

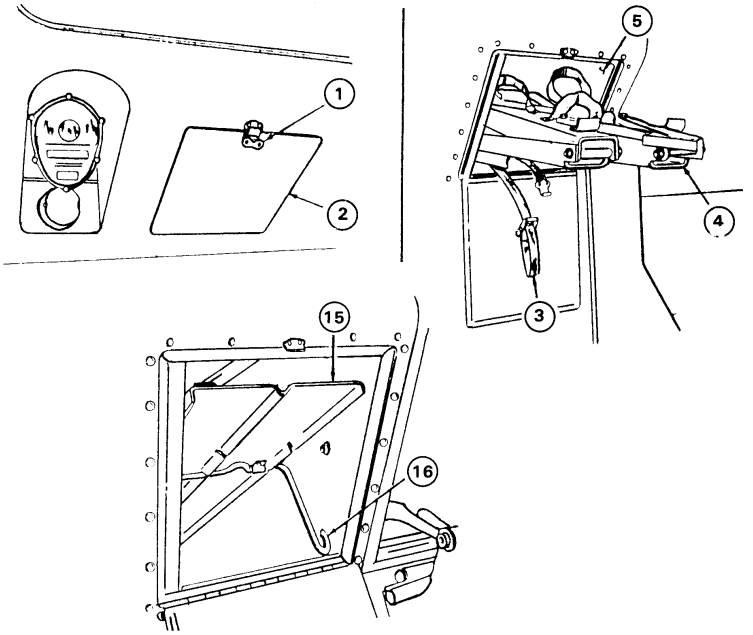

Figure 10-7. Litter rail extension stowage compartment, M997.

(*d*) Secure rear litter handles (19) to upper litter rack (21) with rear litter handle straps (20).

(*e*) Remove litter rail extension (4) from upper litter rack (21).

(*f*) Unhook suspension strap hook (27) from eye (26).

(*g*) Pull out upper litter rack handle (17).

(*h*) Raise upper litter rack (21), push into litter support latch (24), and secure with latch stop (25).

(*i*) Attach suspension strap hook (27) to loop (22) on upper litter rack (21).

(*j*) Secure front litter handles (29) to litter rack (21) with front litter handle straps (28).

(*k*) Hook tension strap (23) to footman loop (30) on lower litter rack (9) and adjust strap.

(*l*) Slide litter rack handle (17) into upper litter rack (21).

(4) *Loading litters on lower litter rack* (*Figure 10-3*).

(*a*) Secure both rails (6) of litter rail extension (4) into slots (10) on lower litter rack (9).

(*b*) Place litter (7) on litter rail extension (4).

(*c*) Slide litter (7) onto lower litter rack (9).

(*d*) Secure litter (7) to lower litter rack (9) with front and rear litter handle straps (8).

(5) *Unloading litters from the lower litter rack* (*Figure 10-3*).

WARNING

1. When unloading more than two litter patients, lower litter rack patients must be unloaded first.

2. Ensure that straps and equipment do not inhibit unloading operations. Unload litters carefully to prevent patient injury.

(*a*) Release front and real litter handle straps (8) securing litter (7) to lower litter rack (9).

(*b*) Secure both rails (6) of litter rail extension (4) into slots (10) on lower litter rack (9).

(*c*) Slide litter (7) from lower litter rack (9) onto litter rail extension (4). Lift up and remove litter (7) from litter rail extension (4).

(6) *Unloading litters from upper litter racks* (*Figure 10-6 and 10-8*).

(*a*) Release front litter handle straps (28) from litter handles (29).

(*b*) Unhook tension strap (23) from footman loop (30) on lower litter rack (9).

(*c*) Pull out upper litter rack handle (17) and support weight of upper litter rack (21).

(*d*) Unhook rear suspension strap hook (27) from loop (22) on upper litter rack (21). Clip suspension strap hook (27) to eye (26).

(*e*) Release litter support latch stop (25), push latch (24) in, and lower upper litter rack (21) onto lower litter rack (9).

(*f*) Slide litter rack handle (17) into upper litter rack (21).

(*g*) Secure rails of litter rail extension (4) into slots in upper litter rack (21).

(*h*) Release rear litter handle straps (20) from litter handles (19).

(*i*) Slide litter (18) down litter rail extension (4) until litter (18) is clear of upper litter rack (21).

(*j*) Lift and remove litter (18) from litter rail extension (4).

(*k*) Remove litter rail extension (4) from upper litter rack (21).

(7) *Fold and stow litter rail extension* (*Figure 10-3 and 10-7*).

(*a*) Unlock support braces (13).

(*b*) Fold left and right rails (6) together.

(*c*) Fold left and right litter rail legs (11) and feet (12) against rail (6).

(*d*) Lift tray (15) and push tray supports (16) in, and lower tray (15).

(*e*) Slide litters into stowage compartment (5) on top of lift tray (15). Pull out supports (16) to place lift tray (15) in raised position.

(*f*) Place folded litter rail extension (4) into stowage compartment (5) and secure with strap (3).

(*g*) Close door (2) and turn latch (1) clockwise to secure door (2).

(8) *Folding upper litter rack to the backrest position* (*Figure 10-6*).

(*a*) Unhook litter rack tension strap (23) from lower litter rack footman loop (30).

(*b*) Unhook two upper litter rack suspension straps hooks (27) from loops (22) on upper litter rack (21) and reattach strap hooks (27) to eyes (26).

(*c*) Release upper litter rack latch (31) and disengage rack striker (32) from latch (31).

(*d*) Lower upper litter rack (21) onto the lower litter rack (9), forming a backrest.

(9) *Converting backrest to upper litter rack* (*Figure 10-6*).

(*a*) Raise upper litter rack (21) and engage rack striker (32) into upper litter rack latch (31). Ensure striker (32) is locked in latch (31).

(*b*) Unhook two upper litter rack suspension strap hooks (27) from eyes (26) and hook to loops (22) on upper litter rack (21).

(*c*) Hook upper litter rack tension strap (23) to footman loop (30) on lower litter rack (9).

(*d*) Adjust straps (23 and 27) for proper tension.

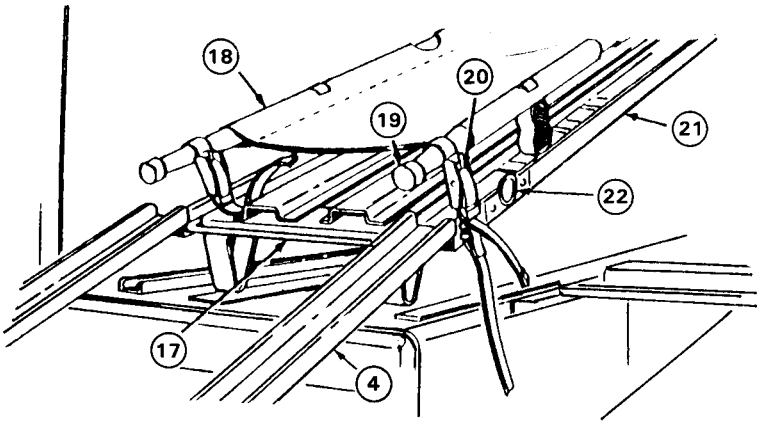

Figure 10-8. Upper litter rack.

10-7. Truck, Ambulance, 1 1/4 Ton, 4x4, M1010

The M1010 truck, ambulance (Figure 10-9), is a diesel-powered vehicle equipped with power steering and brakes and automatic transmission. It can accommodate up to four litter or eight ambulatory patients, or a combination of each. The vehicle has a patient assist boom, and block and tackle for loading. An improved patient life support capability is provided by four additional focus-type lights, air-conditioning, optional GPFU for NBC protection, and supplemental electrical power to operate the life support equipment. The M1010 also has additional storage space between the litter berths and vehicle cab. The loading sequence is *upper right, lower right, upper left,* and *lower left*. In an emergency or mass casualty situation, one additional litter can be placed in the center aisle.

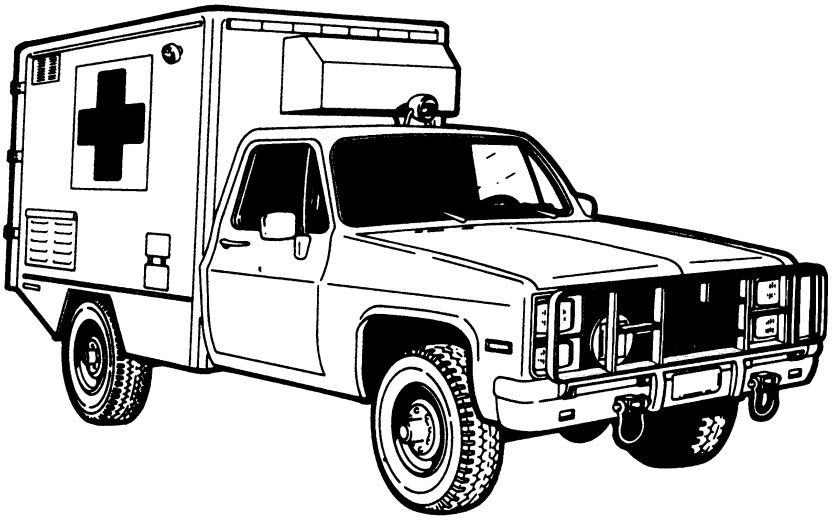

Figure 10-9. Truck, ambulance, 1 1/4 ton, 4x4, M1010.

10-8. Truck, Ambulance, 1 1/4 Ton, 6x6, M792

The M792 truck, ambulance, can accommodate three litter patients and a medical attendant (Figure 10-10), two litter patients, three ambulatory patients, and a medical attendant (Figure 10-11), or six ambulatory patients. Due to the ride characteristics of the vehicle, all litter patients must be securely strapped in place. The sequence for loading the berths is *upper right, upper left*, and *lower*, with the unloading sequence accomplished in reverse order. A two-man squad is required for loading and unloading the vehicle.

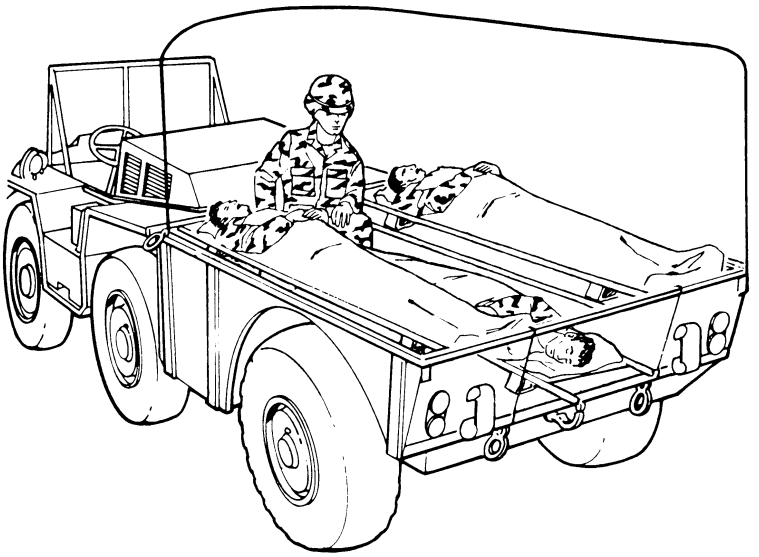

Figure 10-10. Truck, ambulance, 1 1/4 ton, 6x6, M792, with three litter patients and a medical attendant.

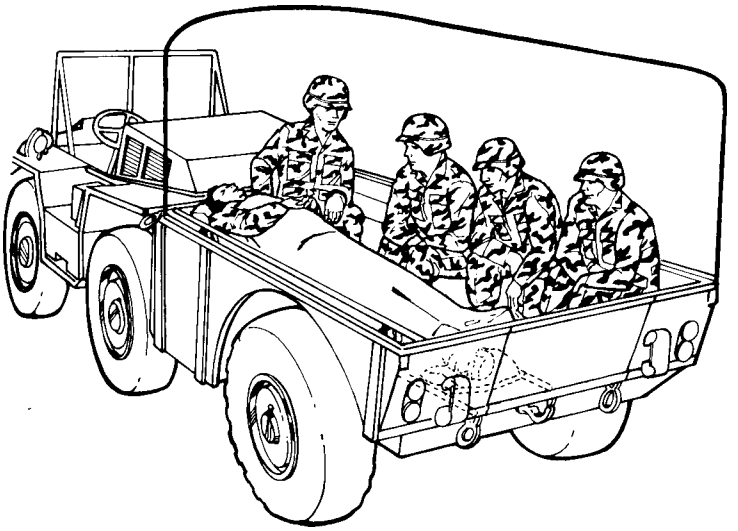

Figure 10-11. Truck, ambulance, 1 1/4 ton, 6x6, M792, with two litter patients, three ambulatory patients, and a medical attendant.

10-9. Buses (Ambulances)

These vehicles can be rapidly converted into ambulances (Figures 10-12 and 10-13). They can be used in support of the Army in the field as far forward as the road network and tactical situation permit. They are most useful in situations where a large number of patients are to be transported for relatively short distances over improved roads, such as transferring patients from hospitals to airheads and ports of embarkation.

a. Patient Carrying Capacity. Ambulance buses have various patient carrying capacities. Total capacity for litter and ambulatory patients depends on the size of the available bus. A kit containing the necessary accessories for conversion is located in the compartment on the right outside of the bus body.

b. Vehicle Conversion. To convert the bus to an ambulance, it may be necessary to remove all seats except those immediately behind the driver. The seats behind the driver are used for medical attendants or ambulatory patients. Litter support hooks are inserted in brackets located at the top and bottom on the interior of the body side. Litter support hangers are then suspended from the hooks in the ceiling rails. To return the vehicle to passenger operation, the procedure is reversed. In some buses, conversion can be done by folding down the seat backs.

c. Loading Procedures. Normally, two 3-man litter squads are required to load and unload the bus ambulance. The vehicle is loaded from front to rear and from top to bottom. All patients are loaded into the bus with their heads toward the front of the vehicle unless the injury dictates using a different loading technique.

(1) *Loading from ramps or platforms*. Two litter teams are required to load the bus. One litter team enters the rear of the bus with a litter patient, loads the patient on the berth, and exits through the front as the second team enters through the rear with a litter patient. The second team loads its patient and exits through the front as the first team enters the rear with its second patient. Only one of the teams is in the bus at a time, thereby avoiding interference.

(2) *Loading without ramps or platforms*. Two litter teams are used to load the bus from the ground. One litter team remains in the bus. A second litter team loads patients onto the bus floor at the rear of the bus where they are picked up by the team in the bus and loaded onto berths.

d. Unloading Procedures. Patients are unloaded (in reverse order of loading procedure) *from rear to front* and *from bottom to top*. Two litter teams are also required to unload the bus.

(1) When the vehicle is to be unloaded from loading ramps or platforms, the two litter teams alternate in unloading.

(2) When the vehicle is to be unloaded without ramps, one litter team removes the litter patients from the berths in the bus and places them on the floor at the rear of the bus where they are picked up and unloaded by the second litter team.

Figure 10-12. Bus ambulance, exterior view.

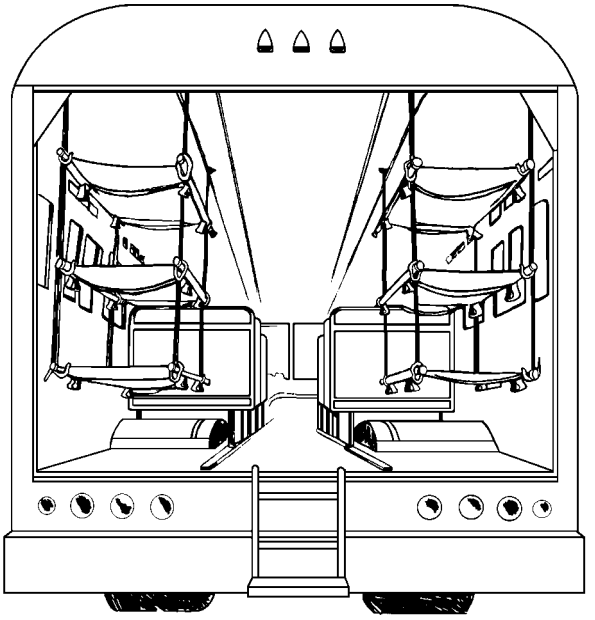

Figure 10-13. Bus ambulance, interior view, seats removed and litters installed.

10-10. Carrier, Personnel, Full Tracked, Armored, M113, T113E2

The M113 armored personnel carrier (Figure 10-14) is a standard evacuation vehicle. It is lightly armored to afford patient protection against small arms. Wearing the helmet inside the vehicle provides added protection, especially over rough terrain, due to the low silhouette. Movement of the tracks propels and steers the vehicle. It is highly maneuverable and capable of—

- Amphibious operations on inland lakes and streams.
- Extended cross-country travel over rough terrain.
- High-speed operations on improved roads and highways.

a. The vehicle can carry ten ambulatory patients and has a conversion kit which, when installed, gives a normal capacity of four litter patients.

b. A squad of four men is needed to load and unload the vehicle. The sequence for loading four litter patients is *upper right, lower right, upper left*, and *lower left*.

> **CAUTION**
>
> To install the litter suspension kit in the M113 ambulance, the spall liner must be removed. Litter patients cannot be safely moved if the litter suspension kit is not installed.

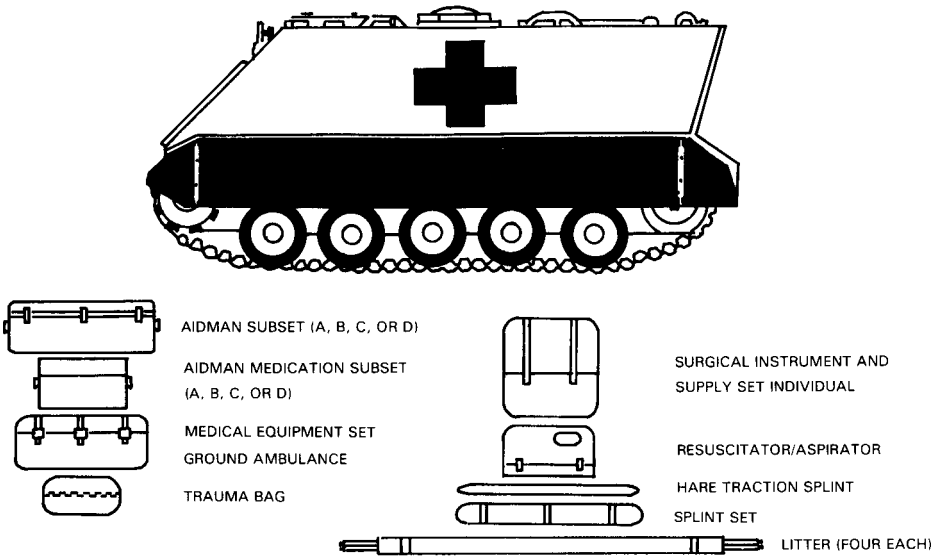

Figure 10-14. Carrier, personnel, full tracked, armored, M113.

Section II. NONMEDICAL VEHICLES USED FOR CASUALTY EVACUATION OR MEDICAL EVACUATION

10-11. General

a. In combat areas, ambulances are often not available, are too few in number, or are incapable of evacuating patients over certain types of terrain. In these instances, many vehicles available to most units can be used to transport casualties with little or no change in their configuration.

NOTE

Units should consider emplacing litter racks on nonmedical vehicles designated to transport casualties. Refer to TM 9-2320-280-24P-1 and -2 for information on the installation of litter racks.

b. Some amphibious cargo and personnel vessels can be used for this purpose; however, their patient-carrying capacity varies.

c. When casualties have entered the CHS system, they are classified as patients. Patient evacuation includes providing *en route medical care* to the patient being evacuated. However, if a casualty is moved on a nonmedical vehicle without en route medical care, he is considered to be *transported,* not *evacuated* (refer to paragraph 1-4). Units should consider emplacing litter racks on these designated vehicles.

10-12. Casualty Transport and Patient Evacuation in a Mass Casualty Situation

To provide timely and responsive evacuation or casualty transport, CHS planners develop proactive OPLANs to meet the challenges of a mass casualty situation.

- Contingency plans should identify—
  - Nonmedical transportation resources.
  - Nonmedical personnel for litter teams.
  - Evacuation routes.
  - Ambulance exchange points.
  - Medical personnel resources to provide en route medical care on nonmedical vehicles.

- Capabilities and locations of MTFs.
- Communications frequencies and call signs for C2.
- Procedures for medical equipment exchanges.

- Key players in coordinating the use of nonmedical vehicles for medical evacuation or casualty transportation are contained in Table 10-2 (Page 10-23).

a. Ground nonmedical assets can be used for casualty transport when the medical evacuation system is overwhelmed. All available ground vehicles should be considered for augmenting medical evacuation assets in an emergency. The key to success is identifying the vehicles, drivers, and medical personnel or combat lifesavers who will accompany the casualties. Coordinating for the release of these assets upon demand rather than waiting for a mass casualty situation to occur is also crucial to the success of the operation. Vehicle types will differ depending upon the type of unit supported; however, some of the more common vehicles which may be used are the—

- Bradley infantry fighting vehicle, M2/3.
- Truck, cargo, medium tactical vehicle (MTV), long wheelbase (LWB), 5 ton, M1085.
- Truck, cargo, $2^1/_2$ ton, M35.
- Truck, cargo, heavy expanded, mobility tactical truck (HEMTT), 8x8, cargo, M977.
- Truck, cargo, MTV, light vehicle air drop/air delivery (LVAD/AD), 5 ton, M1093.
- Truck cargo, light medium tactical vehicle (LMTV), air drop/air delivery, $2^1/_2$ ton, M1081.
- Semitrailer, cargo, $22^1/_2$ ton, M871.
- Armored personnel carrier, M113.
- Tractor, 5 ton, with stake and platform trailer.
- High-mobility, multipurpose wheeled vehicle, M998.

b. Depending on the TO, HN support agreements may provide evacuation assets ranging from austere to extensive support. Coordination with the Assistant Chief of Staff, (Civil-Military Operations) (G5) can provide information on the availability of assets. This information should be included in the OPLANs. Some of the types of assets which might be available for support are—

- Buses.
- Ambulance railcars.

- Barges and other watercraft.
- Civilian cargo vehicles.

c. The staffing of nonmedical vehicles with medical personnel to provide en route medical care requires considerable planning and coordination. Since nonmedical vehicles are normally ones of opportunity, medical personnel and equipment and transportation platforms must be carefully tracked if they are to be used. The modular medical system lends itself well to this form of task organizing by providing four-man trauma treatment teams with equipment organic to the FSMCs and MSMCs. These same treatment modules are also found in the corps ASMCs. Combat health support managers should plan to use these assets in this temporary role. Also available within the CS and CSS units of the division are trained combat lifesavers. These personnel can be used, if available, to provide en route surveillance of less seriously injured patients.

d. The management of patient evacuation using nonmedical evacuation assets is difficult to control. Overevacuation occurs routinely unless controls are implemented to manage the evacuees by patient category. Responsive evacuation in extremely important; however, if en route patient care and management by patient category are ignored, the end result will be an increase in the mortality rate and an overevacuation of RTD soldiers. URGENT and URGENT-SURG precedence patients should be evacuated before PRIORITY or ROUTINE precedence patients. Care must be taken to ensure lower precedence patients are evacuated before their medical condition begins to deteriorate resulting in upgrading their precedence to URGENT or URGENT-SURG. The primary means of evacuating URGENT and URGENT-SURG precedence patients is by air ambulance. If ground ambulance is used for URGENT and URGENT-SURG patients, the patients must be checked frequently to ensure that their medical condition is not deteriorating and rendering them nontransportable. Planners should consider and incorporate into the OPLAN the use of nonmedical air assets and dedicated ground ambulances to move the PRIORITY patient, and nonmedical ground vehicles to move the ROUTINE precedence patients when dedicated medical vehicles are not available. Every effort should be made to staff and equip nonmedical vehicles used for patient evacuation with medical personnel, even if only to move the ROUTINE patient precedence category.

Table 10-2. Coordination Requirements for Nonmedical Transportation and Medical Augmentation to Provide En Route Medical Care

ELEMENT REQUIRING SUPPORT	TYPE OF TRANSPORTATION	COORDINATE TRANSPORTATION WITH	MEDICAL AUGMENTATION FOR EN ROUTE MEDICAL CARE COORDINATION WITH
COMPANY AID POST	GROUND	COMPANY	BATTALION AID STATION
BATTALION AID STATION	GROUND	MANEUVER BATTALION S4	*FSMC
CLEARING STATION (BSA)	GROUND	DMOC-MCO	*MSMC
		FSB SPO	*MSMC
	AIR	BDE S3 AIR	
CLEARING STATION (DIVISION REAR)	GROUND	DMOC-MCO	*CORPS MED BDE
		DMOC	ASMB UNIT
	AIR	G3 AIR	*CORPS MED BDE ASMB UNIT
ENGINEER BATTALION COMPANY	GROUND	FSB SPT OPS	*FSMC/*MSMC
		FSB SPT OPS	*FSMC/*MSMC
	AIR	BDE S3 AIR	
FIELD ARTILLERY BATTALION/ BATTERY	GROUND	FSB/MSB SPT OPS	*FSMC/*MSMC
		FSB/MSB SPT OPS	
	AIR	BDE S3 AIR	*FSMC/*MSMC
OTHER UNITS WITHOUT ORGANIC MEDICAL SUPPORT OPERATING IN DIVISION AREA	GROUND	DMOC-MOC	*FSMC/*MSMC
		CORPS MCT	
		DMOC	*FSMC/*MSMC
	AIR	G3 AIR	

*IN COORDINATION WITH DMOC, IF APPLICABLE.

LEGEND:

ASMB	AREA SUPPORT MEDICAL BATTALION	MCO	MOVEMENT CONTROL OFFICER
BSA	BRIGADE SUPPORT AREA	MCT	MOVEMENT CONTROL TEAM
DMOC	DIVISION MEDICAL OPERATIONS CENTER	MSB	MAIN SUPPORT BATTALION
DTO	DISTRICT TRANSPORTATION OFFICE	MSMC	MAIN SUPPORT MEDICAL COMPANY
FSB	FORWARD SUPPORT BATTALION	SPO	SECURITY, PLANS, AND OPERATIONS
FSMC	FORWARD SUPPORT MEDICAL COMPANY		

10-13. Truck, Cargo/Troop Carrier, 1 1/4 Ton, 4x4, M998 (Four-Man Configuration)

The 1 1/4-ton cargo truck, four-man configuration (Figure 10-15) can be easily adapted for transporting three litters. To convert this vehicle for carrying litters, follow the procedures listed below.

a. Remove the cargo cover and metal bows. Secure them in place. Lower the tailgate.

b. Place two litters side-by-side across the back of the truck with the litter handles resting on the sides of the truck.

NOTE

When the route of evacuation is along narrow roads or trails, care must be taken to prevent the litter handles from catching on trees or bushes.

c. Secure the litters to the vehicle.

d. Place one litter lengthwise, head first, in the bed of the truck. Secure it in place.

e. Leave tailgate open. It is supported by the two tailgate chain books.

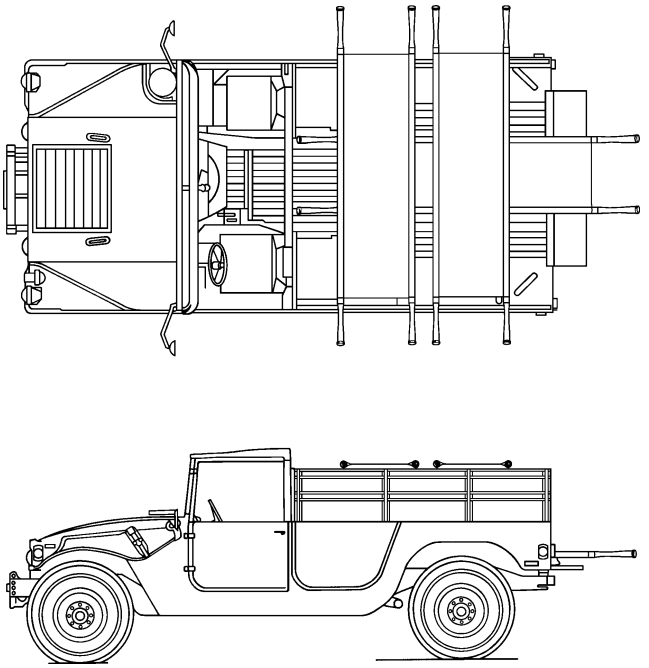

Figure 10-15. Truck, cargo/troop carrier 1 1/4 ton, 4x4, M998 (four-man configuration), with three litters.

10-14. Truck, Cargo/Troop Carrier, 1 1/4 Ton, 4x4, M998 (Two-Man Configuration)

The 1 1/4-ton cargo truck, two-man configuration (Figure 10-16), can be easily adapted for transporting five litters. To convert this vehicle to carry patients, the procedures listed below should be followed:

a. Fold the fabric cover and metal bows forward and together as an assembly. Secure them in place. Lower the tailgate.

b. Place three litters side-by-side across the sideboards. Secure them in place.

c. Place two litters lengthwise, head first, in the bed of the truck. Secure them in place.

d. Leave tailgate open. It is supported by the two tailgate chain hooks.

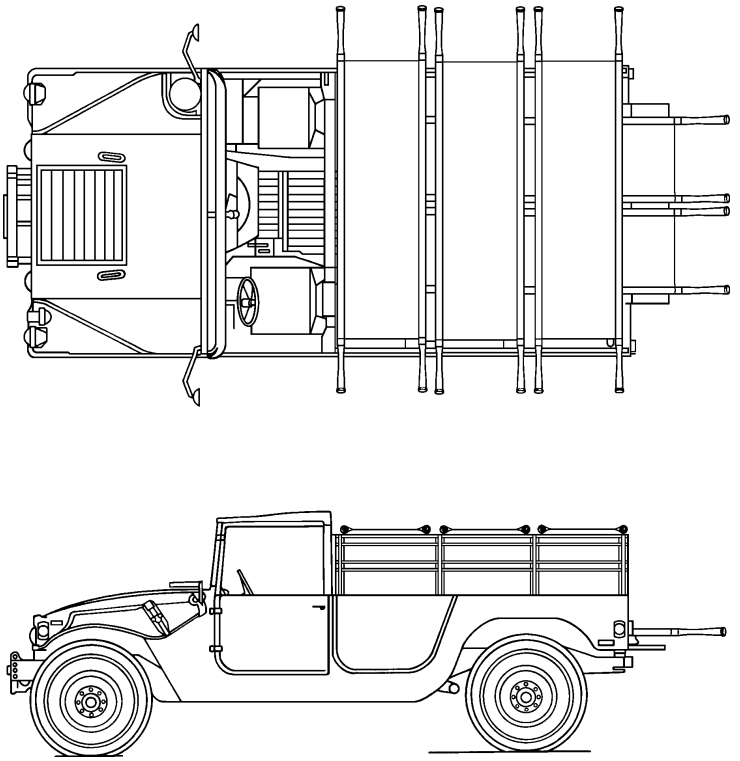

Figure 10-16. Truck, cargo/troop carrier, 1 1/4 ton, 4x4, M998 (two-man configuration), with five litters.

10-15. Truck, Cargo, 5 Ton, 6x6, Wide Bed, and Truck, Cargo, 2 1/2 Ton, 6x6, Wide Bed

These trucks (Figure 10-17) are normally used to transport general cargo as well as personnel. They have canvas-covered cabs and removable tarpaulin braces and sideboards. Both vehicles have a maximum capacity of 12 litters. These vehicles can be used for casualty transportation by—

a. Removing the canvas cover. (The cover can be rolled toward the front of the truck and secured.)

b. Lowering the seats.

c. Placing three litters crosswise on the seats as far forward as possible and three litters lengthwise in the bed of the truck as far forward as possible.

d. Securing the litters individually to the seats.

e. Placing three additional litters crosswise on the seats and three additional litters lengthwise in the bed of the truck.

f. Securing these litters individually to the seats.

g. Raising and securing the tailgate as high as possible to help secure the litters in place.

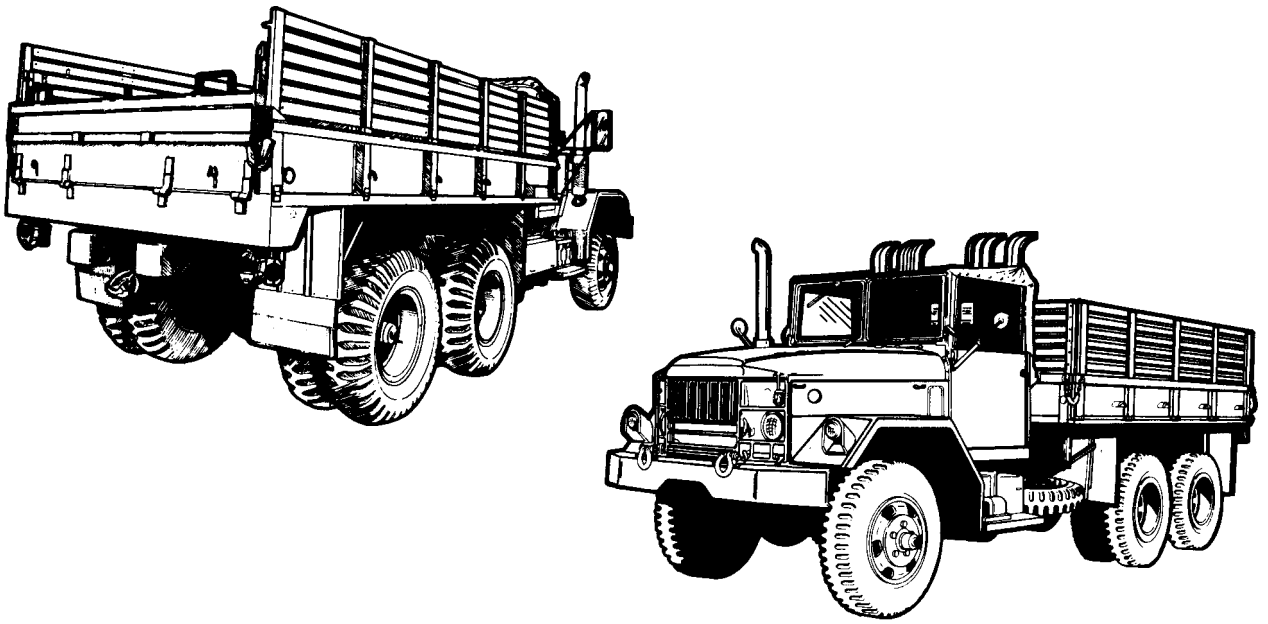

Figure 10-17. Truck, cargo, 5 ton, 6x6, wide bed, and truck, cargo, 2 1/2 ton, 6x6, wide bed.

10-16. Heavy Expanded, Mobility Tactical Truck, 8x8, Cargo, M977

The HEMTT is normally used to transport heavy cargo. It may or may not have the cargo cover kit consisting of the cover, stakes, and bows. The HEMTT has collapsible sides and can be used to transport the wounded in a mass casualty situation. It can be adapted to carry a maximum of nine litter patients in one lift. Instructions for the loading of this vehicle are to—

a. Start at the rear of the vehicle. Roll the cargo cover (if it is on the vehicle) toward the front of the vehicle. Remove the corner lockpins and raise the panel latches to lower the rear section of the cargo body. Remove the first two bows and drop one side of the cargo bed. This will be the side used for casualty loading.

WARNING

Side panels can slide off of the hinge pins when the vehicle is parked on a grade. This can cause injury.

b. Place one litter team in the back of the cargo bed to arrange and secure the litters. The second litter team will carry and place the litters into the cargo bed.

c. Load the litters from front to back, head to toe, and the less serious to the most serious based on casualty triage. The litters will be placed horizontally on the cargo bed (Figure 10-18).

d. Raise and secure the side panel to ensure litter stability and casualty safety. Replace the bows and re-roll the canvas cover, if necessary, to provide protection from the elements.

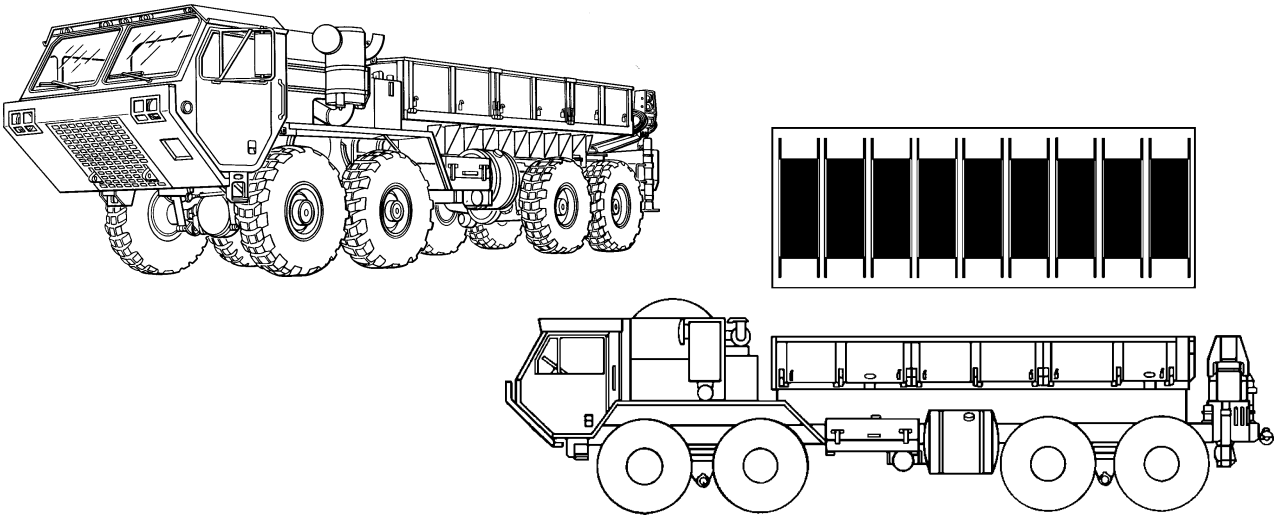

Figure 10-18. Heavy expanded, mobility tactical truck, 8x8, cargo, M977.

10-17. SemiTrailer, Cargo, 22 1/2 Ton, M871

The 22 1/2-ton cargo trailer (M871) (Figure 10-19) is attached to a prime mover such as a M800- or M900-series tractor for the transport of general cargo. (There are no major differences between the M871 and the M871A1 semitrailers.) It has 4 1/3-foot high wooden sides with a canvas trailer cover. This trailer can be used to transport wounded in a mass casualty situation. It can be adapted to carry 16 litters in a single lift. Instructions for the loading of this trailer are to—

a. Remove the tie-downs that secure the canvas cover and roll it forward toward the front of the trailer.

b. Remove the rear panels exposing the trailer bed.

c. Use one litter team in the cargo bed to arrange and secure the litters in the cargo area, while another litter team lifts the casualties to the bed of the trailer.

d. Load litters from *right* to *left, front to back*, based on casualty triage. The more seriously injured are loaded last so that they are unloaded first.

e. Place litters lengthwise, with casualties in a head-to-toe configuration.

f. Replace the rear doors to ensure the security of the litters.

g. Re-roll the cargo cover 3/4 of the way down, then secure the cover to protect the casualties.

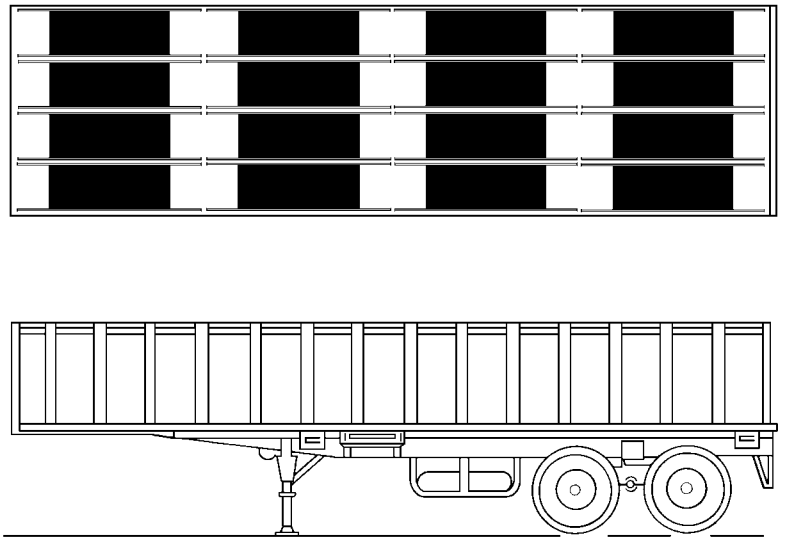

Figure 10-19. Semitrailer, cargo, 22 1/2 ton, M871, loaded with litter.

10-18. Truck, Cargo, Medium Tactical Vehicle, Long Wheelbase, 5 Ton, M-1085

The 5-ton truck is normally used to transport general cargo as well as personnel. It has a canvas cover, removable tarpaulin braces, and hinged sideboards. The canvas cover and braces need not be removed for patient loading and unloading. This vehicle has a maximum capacity of 12 litter or 22 ambulatory patients.

a. Use the following steps to load patients (Figure 10-20) into this vehicle.

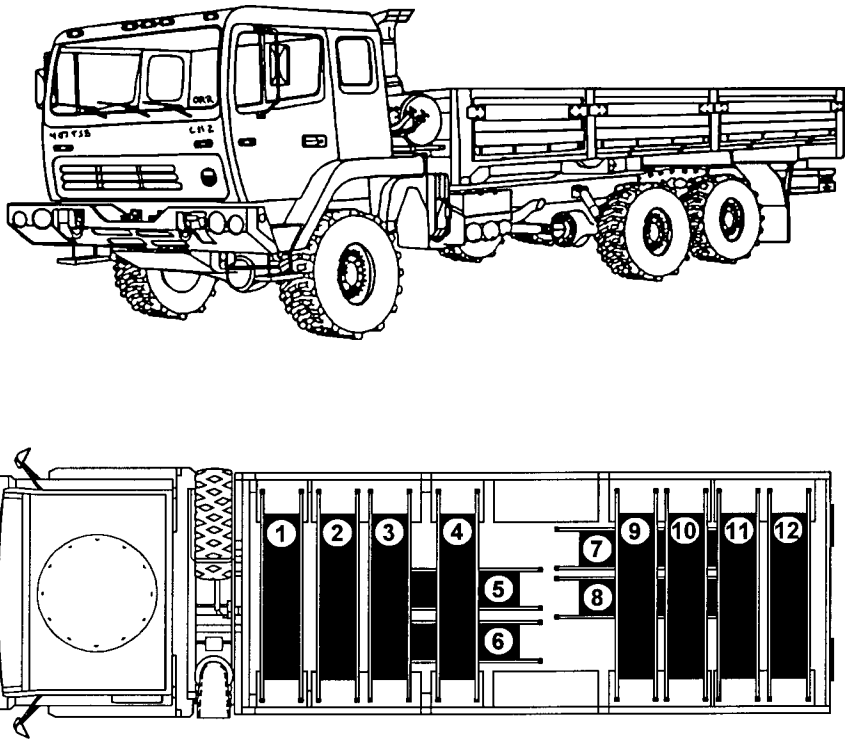

Figure 10-20. Loading the truck, MTV, LWB, 5 ton, M-1085.

(1) Lower the seats and secure the vertical support brackets in place.

(2) Place four litters (litter numbers 1 through 4) crosswise on the seats, forward, next to the cab. Secure the litters individually to the seats.

(3) Place two litters (litter numbers 5 and 6) lengthwise on the floor, forward toward the cab, feet first, ensuring that patients' heads are exposed from under the upper litters. Secure the litters together and to the vertical seat supports.

(4) Place litter number 7 crosswise on the seats near the rear of the vehicle. Slide the litter as far forward as possible. Do not secure the litter at this time.

(5) Follow the same procedures in step (4) above for litter numbers 8 and 9.

(6) Place litter number 10 crosswise on the furthest seat rearward. Secure the litter to the seat.

(7) Slide litters (litter numbers 7, 8, and 9) rearward next to litter number 10. Secure the litters to the seats individually.

(8) Place two litters lengthwise on the floor, head first, ensuring that the patient's head is exposed to the center opening, between the upper litters. Secure the litters together and to the vertical seat supports.

(9) Raise and secure the tailgate.

b. The combat medic or combat lifesaver rides in the center of the vehicle to monitor the patients.

NOTE

If the nonmedical ground vehicle is loaded with the maximum number of casualties, the combat medic/combat lifesaver will not be able to attend to the casualties while the vehicle is moving. At best, if the condition of a casualty deteriorates and emergency measures are required, the vehicle will have to be stopped to permit care to be given.

10-19. Truck, Cargo, Medium Tactical Vehicle, Light Vehicle Air Drop/Air Delivery, 5 Ton, M-1093

The 5-ton truck is normally used to transport general cargo as well as personnel. It has a canvas cover, removable tarpaulin braces, and hinged sideboards. The canvas cover and braces need not be removed for patient loading and unloading. This vehicle has a maximum capacity of 8 litter and 14 ambulatory patients.

a. Use the following steps to load patients (Figure 10-21a) into this vehicle.

(1) Lower the seats and secure the vertical support bracket into place.

(2) Place three litters (litter numbers 1 through 3) crosswise on the seats, forward, next to the cab. Secure the litters individually to the seats.

(3) Place two litters (litter numbers 4 and 5) lengthwise on the floor, forward toward the cab, feet first. Secure the litters together and to the vertical seat support.

(4) Place litter number 6 crosswise on the seats near the rear of the vehicle. Slide the litter as far forward as possible. Do not secure the litter at this time.

(5) Place litter number 7 crosswise on the seats near the rear of the vehicle and slide it forward as in step (4) above. Secure the litter to the seats.

(6) Place litter number 8 crosswise on the seats as far rearward as possible. Secure the litter to the seats.

(7) Glide litter numbers 6 and 7 rearward next to litter number 8. Secure the litters to the seats.

(8) Raise and secure the tailgate.

b. The combat medic/combat lifesaver rides in the center of the vehicle to monitor the patients.

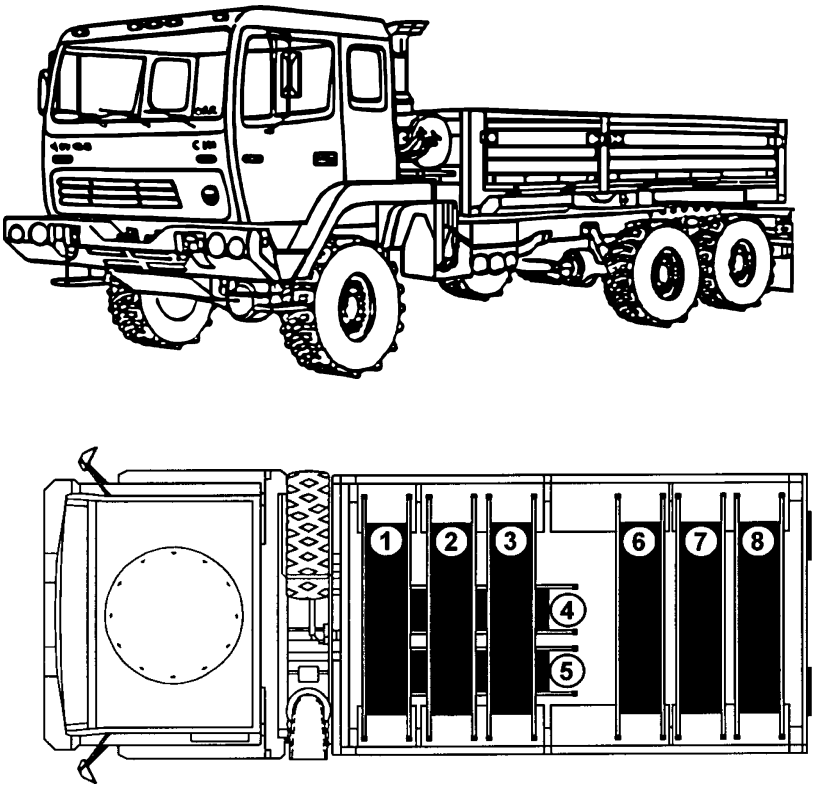

Figure 10-21a. Loading the truck, cargo, MTV, LVAD/AD, 5 ton, M-1093.

10-20. Truck, Cargo, Light Medium Tactical Vehicle, Light Vehicle Air Drop/Air Delivery, 2 1/2 Ton, M-1081

The 2 1/2-ton truck is normally used to transport general cargo and personnel. It has a canvas cover, removable tarpaulin braces, and hinged sideboards. The canvas cover and braces need not be removed for patient loading and unloading. This vehicle has a maximum capacity of 7 litter and 12 ambulatory patients.

a. Use the following steps to load patients (Figure 10-21b) into this vehicle.

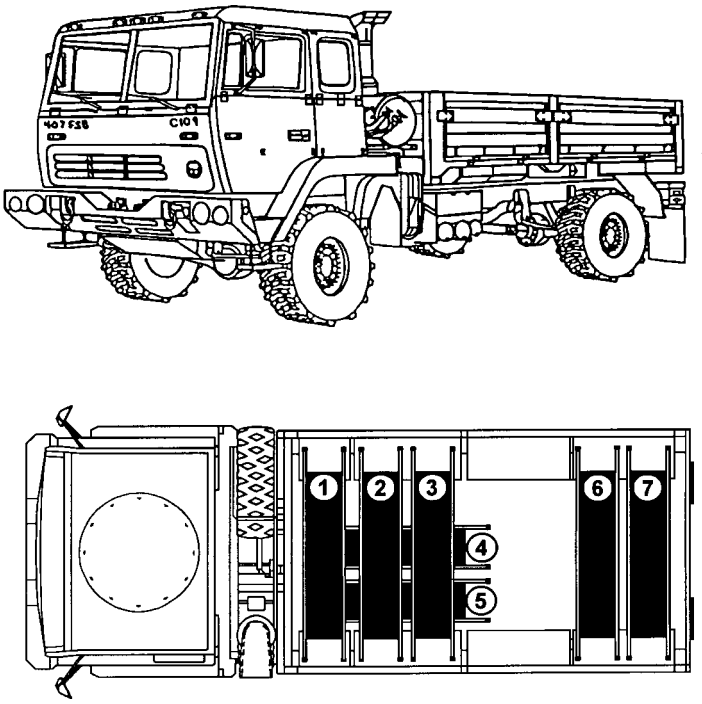

Figure 10-21b. Loading the truck, cargo, LMTV, LVAD/AD, 2 1/2 ton, M-1081.

(1) Lower the seats and secure the vertical support bracket into place.

(2) Place three litters (litter numbers 1 through 3) crosswise on the seats, forward, next to the cab. Secure the litters individually to the seats.

(3) Place two litters (litter numbers 4 and 5) lengthwise on the floor, forward toward the cab, feet first. Secure the litters together and to the vertical seat support.

(4) Place litter number 6 crosswise on the seats near the rear of the vehicle. Slide the litter as far foward as possible. Do not secure the litter at this time.

(5) Place litter number 7 crosswise on the seats as far rearward as possible. Secure the litter to the seats.

(6) Slide litter number 6 rearward next to litter number 7. Secure the litter to the seats.

(7) Raise and secure the tailgate.

(8) The aidman rides in the center of the vehicle to monitor the casualties.

b. The combat medic/combat lifesaver rides in the center of the vehicle to monitor the patients.

Section III. EVACUATION BY MEDICAL AIR AMBULANCES

10-21. General

Aeromedical evacuation is accomplished by both helicopter and fixed-wing aircraft. Dedicated aeromedical evacuation assets permit en route patient care. This care minimizes further injury to the patient and decreases mortality.

10-22. Advantages of Aeromedical Evacuation

Evacuation by aircraft is considered advantageous for a variety of reasons.

a. The speed with which the patient can be evacuated by air to an MTF ensures the timeliness of treatment, thus contributing to—

- Saving lives.
- Reducing permanent disability.
- Increasing the number of patients returned to duty.

b. The range and speed of aircraft make it possible to evacuate patients by air over relatively long distances in short periods of time. This requires the less frequent displacement of MTFs.

c. Helicopters can move patients quickly over terrain where evacuation by other means would be difficult and perhaps impossible to accomplish. The minimum landing area required for helicopters permits patients to be picked up well forward and delivered to the supporting MTFs.

d. Because of the speed, range, flexibility, and versatility of aeromedical evacuation, patients can be moved directly to the MTF best equipped to deal with their condition.

e. The selectivity in the use of MTFs made possible by aeromedical evacuation procedures permits economy in the use of these facilities. Fewer specialty treatment teams are required because of the capability to rapidly evacuate patients to hospitals with the required specialties. Hospitals are required to move less often, thereby reducing periods of noneffectiveness during movement and reestablishment.

10-23. Responsibilities for Loading

The commander who originates the patient evacuation request is responsible for delivering the patient to the landing site and for loading him aboard the aircraft. The actual loading is supervised by aeromedical evacuation personnel. In airhead operations, patients are normally transported by vehicle or litter bearers to designated points within the perimeter of the airhead where evacuation aircraft may be available.

10-24. Army Air Ambulances

Helicopters are rotary-wing aircraft capable of horizontal, vertical, lateral, and hovering flight. Their ability to circumvent terrain and obstacles, and the minimum requirements for takeoff and landing enable them to operate from areas inaccessible to fixed-wing aircraft or surface vehicles. The helicopter's capability of flight at relatively slow speeds permits operations during periods of reduced ceiling and visibility. Helicopters are organic to the air ambulance units and aviation units of the division and corps. Military helicopters are designated by a combination of letters and numbers which are used to identify the basic mission and type: observation helicopter (OH), utility helicopter (UH), and cargo/transport helicopter (CH). The last two classes of helicopters can be used for the air evacuation of litter patients.

a. *The UH-60A Blackhawk* (*Figure 10-22*). This helicopter is used as the primary dedicated air ambulance. The normal configuration for aeromedical evacuation provides for four litter patients and one ambulatory patient. The maximum configuration provides for six litter patients and one ambulatory patient, or seven ambulatory patients.

b. *The UH-1H/V Iroquois* (*Figure 10-23*). This aircraft also is used as a dedicated air ambulance. The normal evacuation configuration provides for three litter and four ambulatory patients. The maximum patient configuration provides for six litter patients or nine ambulatory patients.

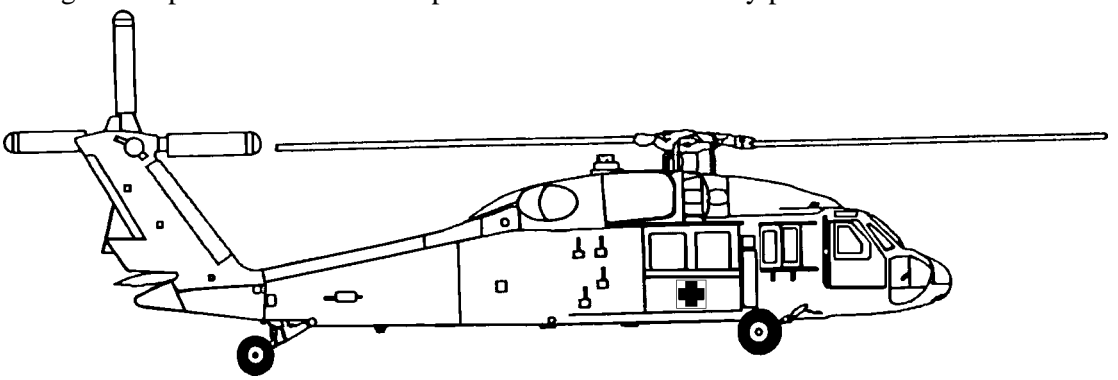

Figure 10-22. UH-60A Blackhawk.

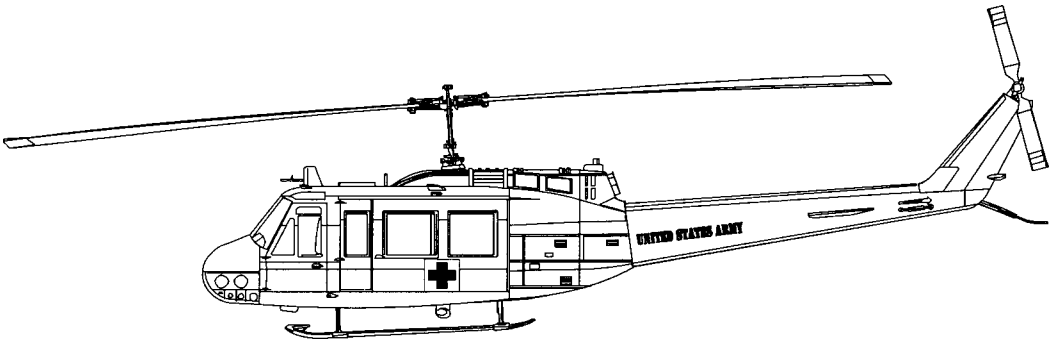

Figure 10-23. UH-1H/V Iroquois.

10-25. Helicopter Landing Sites

a. Responsibility. The unit requesting aeromedical evacuation support is responsible for selecting and properly marking the helicopter LZ.

b. Criteria for Landing Sites.

- The helicopter LZ and the approach zones to the area should be free of obstructions. Sufficient space must be provided for the hovering and maneuvering of the helicopter during landing and takeoff. The approach zones should permit the helicopter to land and take off into the prevailing wind whenever possible. It is desirable that landing sites afford helicopter pilots the opportunity to make shallow approaches.

- Definite measurements for LZs cannot be prescribed since they vary with temperature, altitude, wind, terrain, loading conditions, and individual helicopter characteristics. The minimum requirement for light helicopters is a cleared area of 30 meters in diameter with an approach and departure zone clear of obstructions.

c. Removing or Marking Obstructions. Any object (paper, cartons, ponchos, blankets, tentage, or parachutes) likely to be blown about by the wind from the rotor should be removed from the landing area. Obstacles, such as cables, wires, or antennas at or near LZs, which cannot be removed and may not be readily seen by a pilot, must be clearly marked. Red lights are normally used at night to mark all obstacles that cannot be easily eliminated within a LZ. In most combat situations, it is impractical for security reasons to mark the tops of obstacles at the approach and departure ends of a LZ. If obstacles or other hazards cannot be marked, pilots should be advised of existing conditions by radio.

NOTE

In a training situation or at a rear area LZ, red lights should be used whenever possible to mark obstructions.

d. Identifying the Landing Site (*Figures 10-24 through 10-28*).

(1) When the tactical situation permits, a landing site should be marked with the letter "H" or an inverted "Y," using identification panels or other appropriate marking material. Special care must be taken to secure panels to the ground to prevent them from being blown about by the rotor wash. Firmly driven stakes will secure the panels tautly; rocks piled on the corners are not adequate.

(2) If the tactical situation permits, the wind direction may be indicated by a—

- Small wind sock or rag tied to the end of a stick in the vicinity of the LZ.

- Man standing at the upwind edge of the site with his back to the wind and his arm extended forward.

- Smoke grenades that emit colored smoke as soon as the helicopter is sighted. Smoke color should be identified by the aircrew and confirmed by ground personnel.

(3) In night operations, the following factors should be considered:

(*a*) One of the preferred methods to mark a landing site for aircrews using NVGs is to place a light, such as an infrared chemical light, at each of the four corners of the usable LZ. These lights should be colored to distinguish them from other lights which may appear in the vicinity. A particular color can also serve as one element in identifying the LZ. Flare pots or other types of open lights should only be used as a last resort. They usually are blown out by the rotor downwash. Further, they often create a hazardous glare or reflection on the aircraft's windshield. The site can be further identified using a coded signal flash to the pilot from a ground operator. This signal can be given with the directed beam of a signal lamp, flashlight, vehicle lights, or other means. When using open flames, ground personnel should advise the pilot before he lands. Burning material must be secured in such a way that it will not blow over and start a fire in the LZ. Precautions should be taken to ensure that open flames are not placed in a position where the pilot must hover over or be within 3 meters of them. The coded signal is continuously flashed to the pilot until recognition is assured. After recognition, the signal operator, from his position on the upwind side of the LZ, directs the beam of light downwind along the ground to bisect the landing area. The pilot makes his approach for landing in line with the beam of light and toward its source, landing at the center of the marked area. All lights are displayed for only a minimum time before arrival of the helicopter. The lights are turned off immediately after the aircraft lands. Blue and green light sources should only be used as a last resort; the filter on the NVGs may make them difficult to detect.

(*b*) When standard lighting methods are not possible, pocket-sized white (for day) or amber (for night) strobe lights are excellent means to aid the pilot in identifying the LZ.

(*c*) During takeoff, only those lights requested by the pilot are displayed; they are turned off immediately after the aircraft's departure.

(4) When the helicopter approaches the LZ, the ground contact team can ask the pilot to turn on his rotating beacon briefly. This enables the ground personnel to identify the aircraft and confirm its

position in relation to the LZ (north, south, east, or west). The rotating beacon can be turned off as soon as the ground contact team has located and identified the aircraft. The ground contact team helps the pilot by informing him of his location in relation to the LZ, observing the aircraft's silhouette, and guiding the aircraft toward the LZ. While the aircraft is maneuvering toward the LZ, two-way radio contact is maintained and the type of lighting or signal being displayed is described by the pilot and verified by ground personnel via radio. The signal should be continued until the aircraft touches down in the LZ.

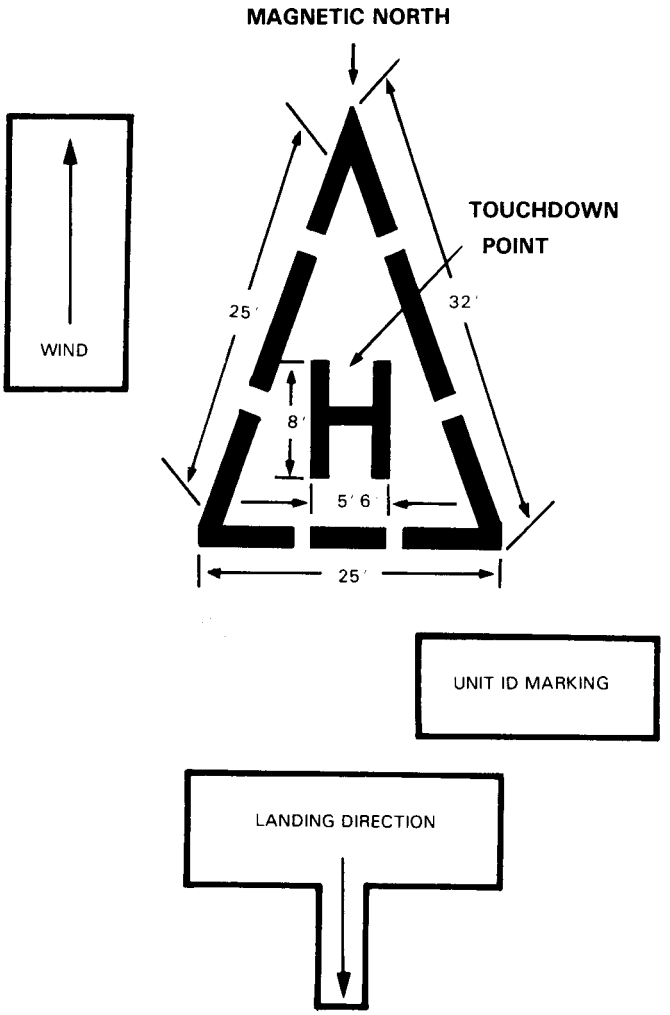

Figure 10-24. Semifixed base operations (day).

(5) The use of FM homing procedures can prove to be a valuable asset, especially to troops in the field under adverse conditions. Through the use of FM homing, the pilot can more accurately locate the ground personnel. The success of a homing operation depends upon the actions of the ground personnel. First, ground personnel must be operating an FM radio which is capable of transmitting within the frequency range of 30.0 to 69.95 megahertz; then they must be able to gain maximum performance from the radio (refer to appropriate technical manual for procedure). The range of FM radio communications is limited to line of sight; therefore, personnel should remain as clear as possible of obstructions and obstacles which could interfere with or totally block the radio signals. Ground personnel must have knowledge of the FM homing procedures. For example, when the pilot asks the radio operator to "key the microphone," he is simply asking that the transmit button be depressed for a period of 10 to 15 seconds. This gives the pilot an opportunity to determine the direction to the person using the radio.

NOTE

When using FM homing electronic countermeasures, the possible site detection of LZs by means of electronic triangulation presents a serious threat and must be considered.

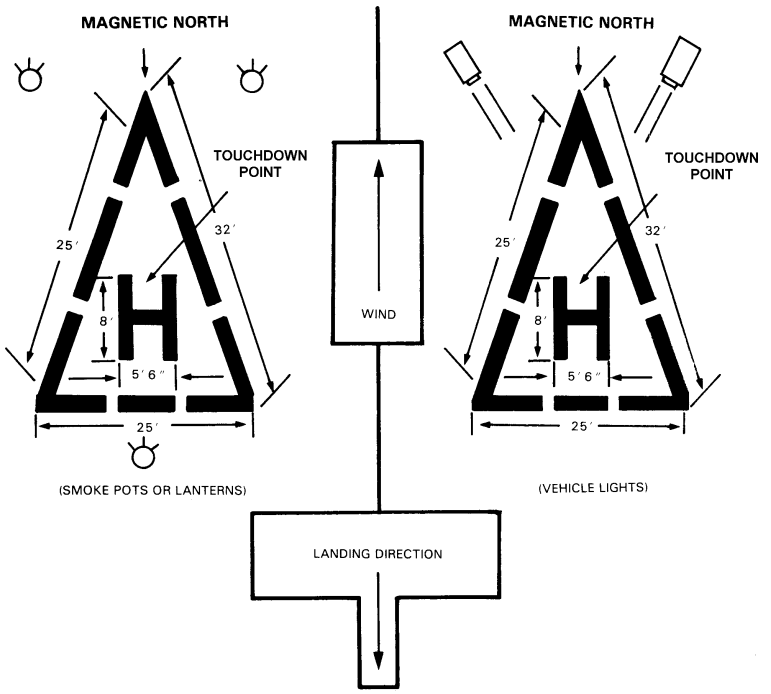

Figure 10-25. Semifixed base operations (night).

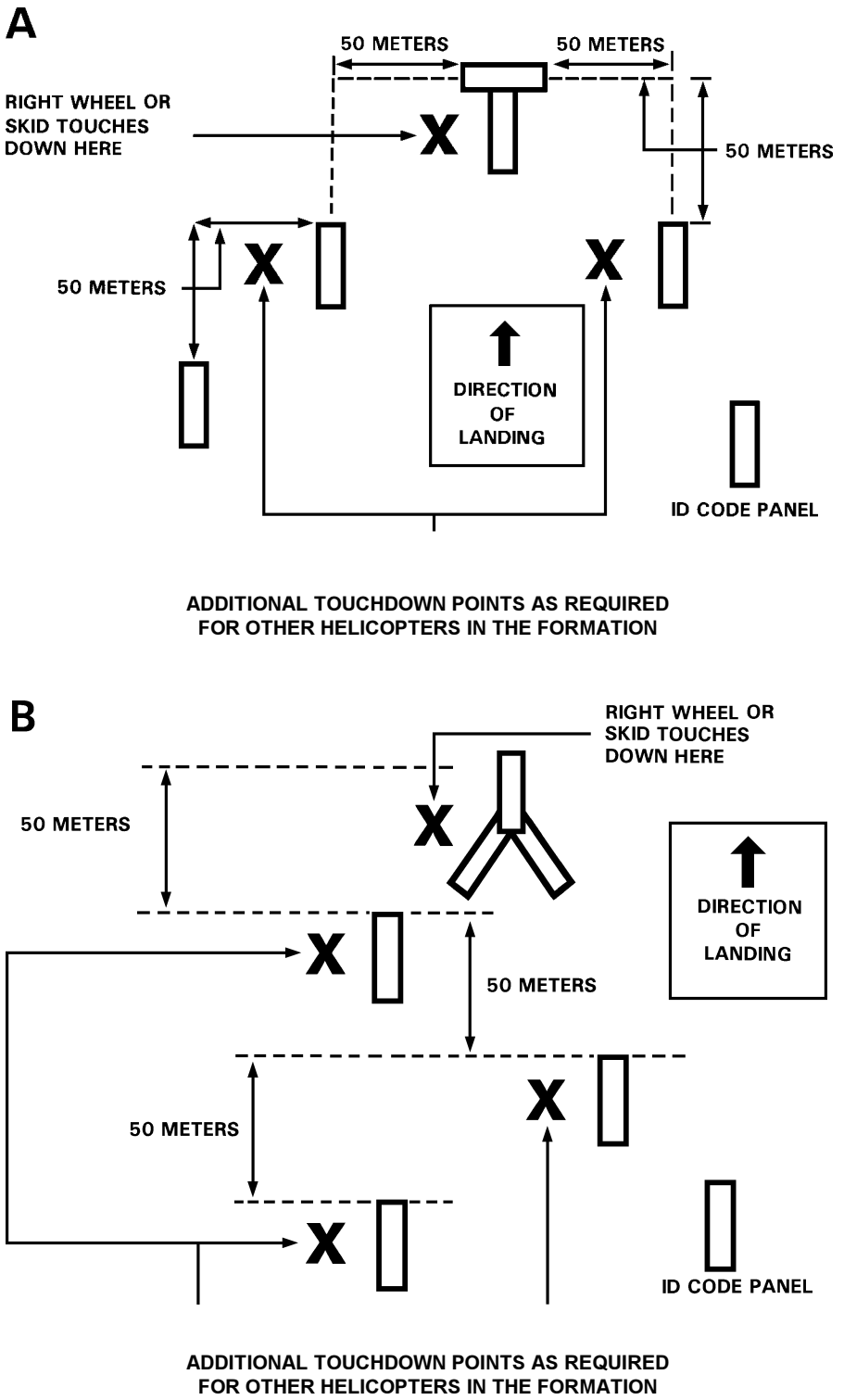

Figure 10-26. Field expedient landing zone (day).

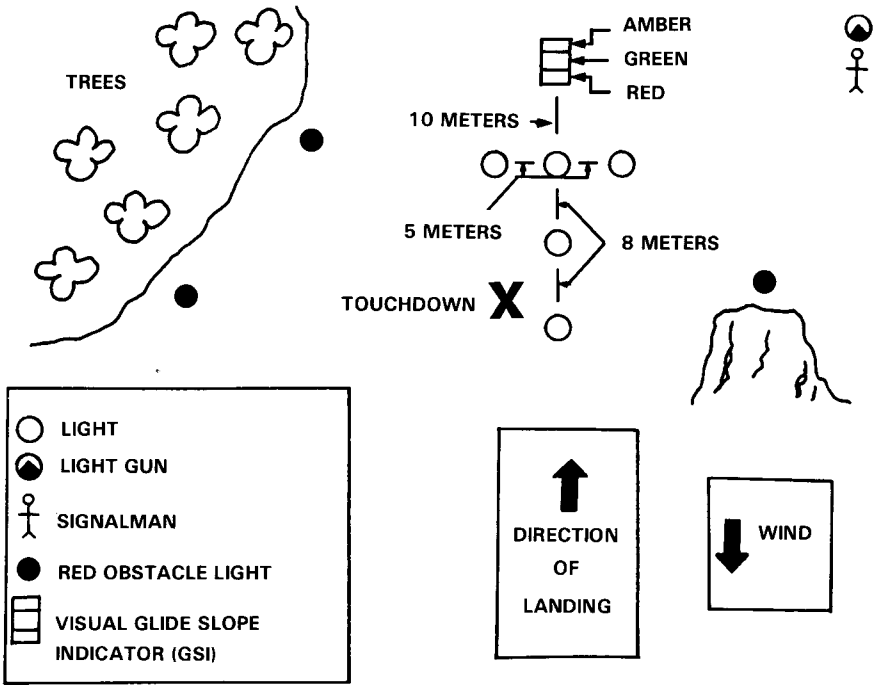

Figure 10-27. Field expedient landing zone (night).

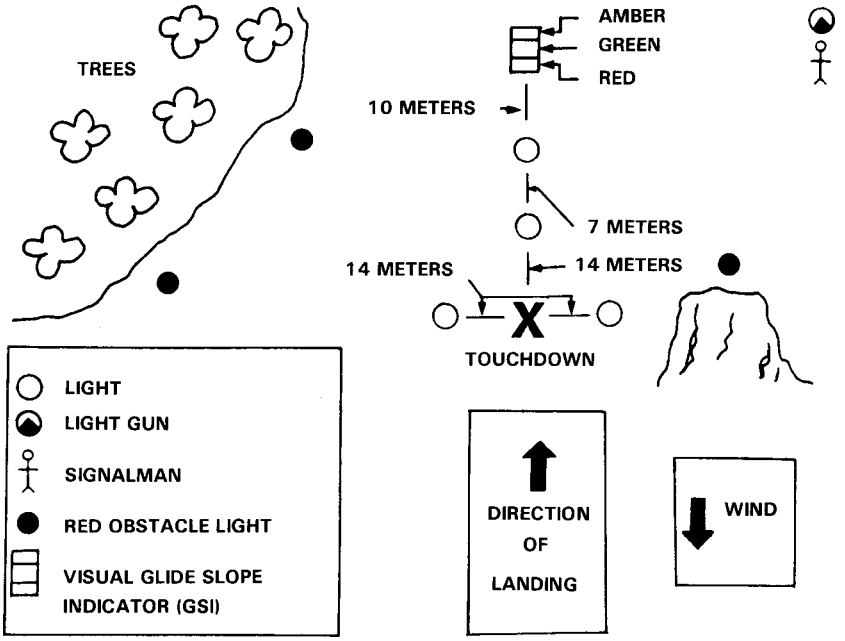

Figure 10-28. Field expedient inverted landing zone (night).

10-26. Loading Patients Aboard Rotary-Wing Aircraft

a. Responsibility for Loading and Securing. The pilot is responsible for ensuring that the litter squad follows the prescribed methods for loading and securing litters and related equipment. The final decision regarding how many patients may be safely loaded rests with the pilot.

b. Safety Measures. When loading and unloading a rotary-wing aircraft, certain precautionary measures must be observed. Litter bearers must present as low a silhouette as possible and must keep clear of the rotors at all times. The helicopter must not be approached until a crew member signals to do so. The litter bearers should approach the aircraft at a 45-degree angle from the front of the helicopter. If the helicopter is on a slope and conditions permit, loading personnel should approach the aircraft from the downhill side. Directions given by the crew *must* be followed, and litters *must* be carried parallel to the ground. Smoking is not permitted within 50 feet of the aircraft.

10-27. Loading Patients Aboard the UH-60A Blackhawk

a. Interior of the UH-60A Blackhawk. This helicopter, as with the UH-1H/V, has a number of possible seating or cargo configurations. A major difference in preparing the UH-60A to carry litters is that a medical evacuation kit must be installed. This kit consists of a seat/converter assembly unit and a litter support unit. The seat/converter assembly provides for three rear-facing seats which allows the medical attendant and crew chief to monitor patients. The litter support unit consists of a center pedestal which can be rotated 90 degrees about the vertical axis for the loading and unloading of patients. The litter support unit has a capacity of four to six litter patients. The patients can be loaded from either side of the aircraft. Only the upper litter supports in the four-litter configuration can be tilted for loading and unloading patients.

NOTE

When the six-litter modification kit is installed, the center pedestal can no longer be rotated.

If litter patients are not being evacuated, a maximum of six ambulatory patients can be seated on the litter support unit (three on each side). A seventh ambulatory patient can be seated on a troop seat.

NOTE

Only three litters can be loaded when using the internal rescue hoist.

When the medical evacuation kit is installed, a number of cabin configurations are possible. (See Tables 10-3 and 10-4.)

Table 10-3. Patient Configurations, UH-60A Medical Evacuation Kit

4-LITTER (COMBAT) CONFIGURATION	6-LITTER (HIGH CAPACITY) CONFIGURATION
4 LITTER PATIENTS 1 AMBULATORY PATIENT	6 LITTER PATIENTS 1 AMBULATORY PATIENT
2 LITTER PATIENTS 4 AMBULATORY PATIENTS	3 LITTER PATIENTS 4 AMBULATORY PATIENTS
NO LITTER PATIENTS 7 AMBULATORY PATIENTS	NO LITTER PATIENTS 7 AMBULATORY PATIENTS

NOTE: With each configuration, there is sufficient room to carry a crew chief and a medical aidman.

Table 10-4. Patient Configurations, UH-60A Medical Evacuation Kit with Internal Rescue Hoist Installed

4-LITTER (COMBAT) CONFIGURATION WITH INTERNAL RESCUE HOIST INSTALLED	6-LITTER (HIGH CAPACITY) CONFIGURATION WITH INTERNAL RESCUE HOIST INSTALLED
3 LITTER PATIENTS 1 AMBULATORY PATIENT	6 LITTER PATIENTS 1 AMBULATORY PATIENT
NO LITTER PATIENTS 4 AMBULATORY PATIENTS	NO LITTER PATIENTS 4 AMBULATORY PATIENTS

NOTE: With each configuration, there is sufficient room to carry a crew chief and a medical aidman.

b. Guides for Loading Patients.

(1) Litter patients should be positioned in the helicopter according to the nature of their injuries or condition. Personnel aboard the aircraft supervise the loading and positioning of the patients. Normally, the helicopter has a crew of four. The crew consists of a pilot in command (PC), copilot (PI), crew chief, and flight medic.

(2) The most seriously injured patients are loaded last on the bottom pans of the litter support unit. However, if it is anticipated that a patient's medical condition may require in-flight emergency medical care (such as cardiopulmonary resuscitation), he should be loaded onto either of the top pans to facilitate access to him.

(3) The structuring of the litter support unit allows patients to receive IV fluids and oxygen in flight. Patients receiving IV fluids can be placed on any of the litter pans, depending on their injuries or condition.

(4) Patients in traction splits should be loaded last and on a bottom pan.

(5) The UH-60A has the capability to be loaded on both sides simultaneously. Patients should be loaded so that upon rotating the litter support, the patient's head will be forward in the cabin. To accomplish this, patients loaded on the left side of the aircraft should be loaded head first and patients loaded on the right side of the aircraft should be loaded feet first (left and right sides are determined from the position of the PC's seat, looking forward). When the six-litter configuration is used, the fifth and sixth litter patients are loaded with the carousel in the fly position. The patients' heads should face toward the front of the aircraft.

c. Installing Litter Pan Supports. Each litter support is attached to the center pedestal by two end pivot shafts and by two T-shaped fittings. These fittings and shafts allow for the removal, interchange, or re-positioning of the supports. There are five pivot shaft support holes at both ends on the right and left side of the center console. Behind the holes are support rollers for the pivot shafts. From top to bottom, the top hole is provided for the upper litter in the six-litter configuration. The second hole is for the upper litter support of a four-litter configuration. These end holes line up with a central pivot hole, which accommodates a central pivot shaft on the litter support. Only this litter position allows midposition pivoting for loading or unloading. The third hole is for the center litter of the six-litter configuration. The fourth hole is used when installing the litter support as a seat for evacuating ambulatory patients. The fifth hole is used for the lower litter support in the four-litter configuration. The third, fourth, and fifth positions do not provide a tilt function.

(1) Lower litter support installation. Before installing, each center pivot shaft must be retracted and unlocked. The center pivot shaft handle must be secured in the handle retainer. End pivot handles must be in the tilt position.

(*a*) Engage T-bars on litter support with split retention fittings at the bottom of the pedestal.

(*b*) Line up the end pivot shafts with holes. Disengage the pivot shaft lever locks and move the end pivot shaft lever toward the pedestal. The pivot shaft is, then, fully inserted into the pivot shaft holes on the pedestal and the handle lock is engaged.

(*c*) Repeat step (*b*) for the other end of litter support.

(2) Upper litter support installation. Before installing, each center pivot pin must be unlocked and retracted. The handle is then disengaged from its retainer. The end pivot handles must be in the tilt position.

(*a*) Tilt the outer edge of litter support slightly down and engage the T-bars into split retention fittings at the second support hole from the top of the pedestal.

(*b*) Raise the outer edge of the litter support until the support is level.

(*c*) Insert the end pivot shaft into the pedestal by pulling on the pivot shaft lever lock and moving the lever toward the pedestal until the end pivot shaft engages partway in end pivot support hole.

(*d*) Turn the center pivot shaft lock handle counterclockwise until it is horizontal.

(*e*) Push the center pivot shaft toward the pedestal until the shaft is fully inserted into the center pivot shaft hole. The opposite end of the litter support should be raised or lowered to align the center shaft on the support with the center hole on the pedestal.

(*f*) Turn the center pivot lock lever clockwise to the horizontal position.

(*g*) Repeat step (*c*) above for the other end of the litter support. Now slide both end pivot shafts in fully by moving the pivot lever lock handle to the engaged position.

(3) Upper litter support relocation for six-litter configuration.

(*a*) Remove the litter support from the second support hole from the top of the pedestal. The removal of the litter support is the reverse of its installation. Before relocation, each center pivot pin must be locked and the handles must be secured in the handle retainer.

(*b*) Line up the end pivot shafts with the top support holes. Then fully insert and engage the handle lock.

(*c*) Repeat steps (*a*) and (*b*) above for other end of litter support.

(4) Middle litter support installation for six-litter configuration.

(*a*) Remove the litter support from the fifth (bottom) support hole. The removal of the litter support is the reverse of its installation.

(*b*) Align the end pivot shafts with third support hole from the top of the pedestal to relocate it. Then fully insert and engage handle lock.

(*c*) Repeat steps (*a*) and (*b*) above for other end of litter support.

(5) Bottom litter support installation for six-litter configuration. To complete the six-litter configuration, the modification kit is required. The kit consists of a tube assembly and a restraint assembly for each side.

(*a*) Insert the restraint assembly using the plate quick disconnect fittings into the proper quick attachment fittings on the cargo floor. Pull up on the restraint assembly to check for secure installation.

(*b*) Attach tube assembly longitudinally to the proper tie down restraint rings on the cargo floor. Ensure that the restraint rings are properly secured to the bracket tube support with the attached pin (Figure 10-29).

(*c*) Repeat steps (*a*) and (*b*) above for the other end of the litter support.

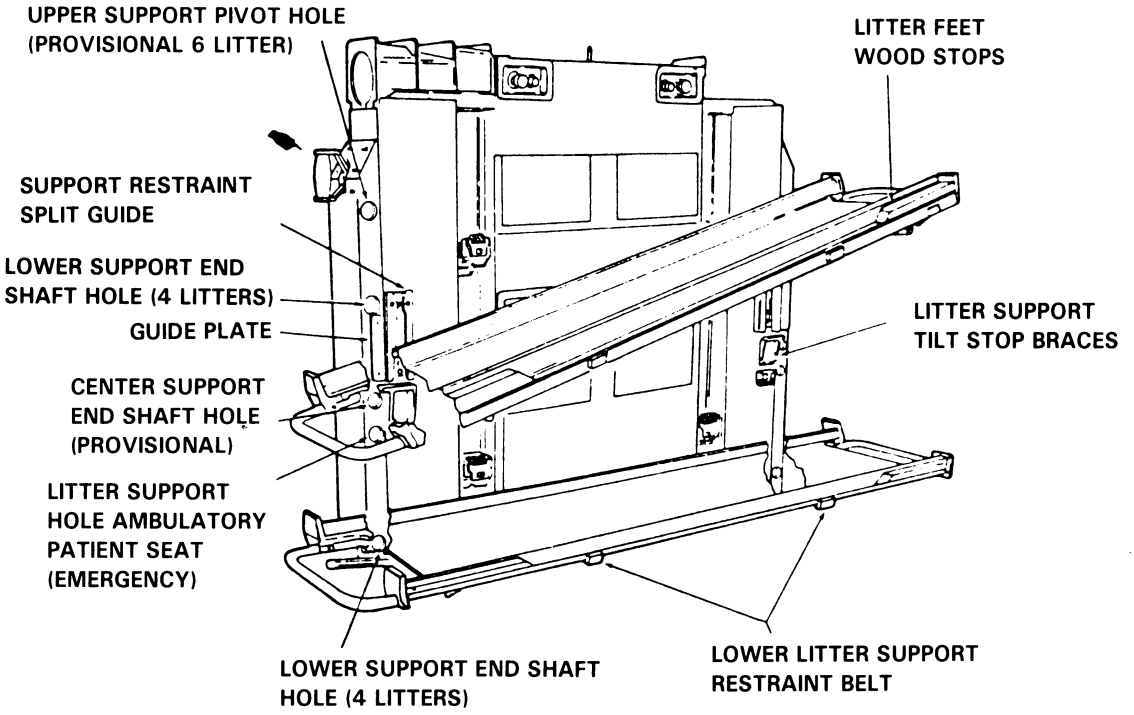

Figure 10-29. Litter pan in the load and unload (tilt) position (same at other side of pedestal).

(6) Litter support installation for ambulatory patient seating.

(*a*) Prepare supports as in *c*(1) above.

(*b*) Engage the T-bar on the litter pan with the split retention brackets below the support tilt stop brackets.

(*c*) Position the litter support at the second from the bottom litter support end pivot hole on the pedestal.

(*d*) Line up the end pivot shafts with the holes. Disengage pivot shaft lever lock and move pivot shaft lever toward the pedestal. Fully insert the pivot shaft into pivot shaft hole on the pedestal and engage handle lock.

(*e*) Repeat step (*c*) for the other end of litter support.

(7) Storage of litter pans.

(*a*) Lower stowage brackets to the horizontal position and insert the retaining pin through stowage bracket into pedestal.

WARNING

Improper positioning of the stowage bracket retaining pin reduces the holding capability of the stowage bracket and may cause it to shear the pivot bolt during a crash sequence.

(*b*) Place the litter pan in the stowed position against the center pedestal.

(*c*) Secure the litter pan to the center pedestal by routing the opposite web strap around the upper portion of the litter pan handle. Secure the metal clasp to the metal ring.

NOTE

The use of the opposite strap reduces excess movement of litter pan.

(*d*) Use opposite web strap to secure the upper side of the litter pan handle as described in step (*c*) above, while the same side web strap is used to secure the bottom side of the stored litter pan handle.

(*e*) Remove the stowed litter pans by reversing steps (*a*)—(*d*) above.

d. Loading of Upper Litters. For ease of loading, the upper litter pans may be tilted. Upper litter pans are supported by a center pivot shaft and two end pivot shafts, one at each end of the litter pan. To tilt the upper support for the loading and unloading of litter patients, the center shaft remains locked to the pedestal and the end shafts are disengaged for support pivoting.

NOTE

This system was designed to pivot about the center shaft allowing either end to be tilted downward. Although the supports may be pivoted at either end, more effort is required when a loaded litter is installed.

e. Loading and Securing Patients.

(1) In loading four litter patients with a four-man litter squad, the litters are loaded from the top to bottom. The sequence for loading litters from one side of the aircraft with the carousel turned is *upper right, upper left, lower right*, and then *lower left*. To load litters from both sides of the aircraft simultaneously, the sequence is upper then lower (Figure 10-30).

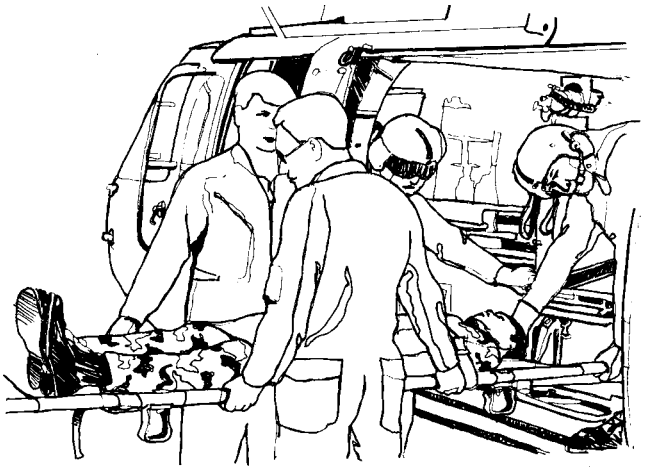

Figure 10-30. Loading litter into UH-60A.

(*a*) The litter support unit is rotated 90 degrees clockwise to receive the litter patients. The flight crew lowers the top pan to accept the litter and stands by to assist. This is accomplished as the litter squad approaches the aircraft.

(*b*) The litter squad moves into the semioverhead carry, lifting the litter just high enough for the litter stirrups of one end to slide onto the litter pan. The litter squad slides the litter forward. The flight crew member guides and assists the litter squad, until the litter stirrups of both ends are secured on the pan. The litter squad departs as the flight crew member raises the pan back to its upright position and secures it. The flight crew member fastens the litter straps attached to the litter support assembly.

(*c*) After the first litter is loaded, the squad leaves the aircraft as a team to obtain another litter patient. The second, third, and fourth litters are loaded in the same manner, except that the bottom pans are not tilted to receive patients.

(*d*) After having loaded four litter patients, the litter support unit is rotated 90 degrees counterclockwise and locked in the in-flight position. The cargo doors must be closed for flight.

(2) The loading of six litter patients requires the repositioning of the litter support prior to loading. The loading procedure remains the same as the four-litter configuration except for the following:

(*a*) The top litter support no longer tilts. This necessitates overhead loading and may require additional assistance.

(*b*) After four litters are loaded, the pedestal must be rotated back to the locked position. The restraint and tube assembly modification kit is then installed. The last two litters are side loaded between the restraints, with the patients' heads toward the front of the aircraft. They are secured.

(3) When the aircraft is to receive a mixed load of litter and ambulatory patients, one top pan of the litter support is removed and repositioned just above the bottom pan on the same side. The aircraft can now accommodate two or three litter and four ambulatory patients (Figure 10-31).

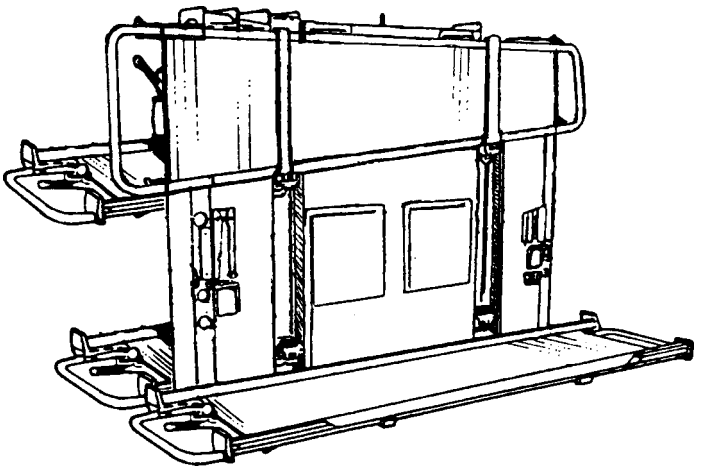

Figure 10-31. Litter support.

(*a*) The litter support unit is rotated clockwise to receive the litter patients, except for the third litter in the six-litter configuration. The litters are loaded as described in paragraph *e*(1) above. Upon loading and securing the litter patients, the litter support unit is rotated counterclockwise to the in-flight position. The third litter is then loaded when the six-litter configuration is used.

(*b*) Ambulatory patients are escorted to the aircraft by ground personnel. They are assisted into their seats and secured with the seat belts attached to the litter support unit.

(*c*) The cargo doors are now closed for flight.

WARNING

To prevent further injury to patients, all end support pins of the installed litter pans must be in the locked position for flight.

f. Unloading Patients. The aircraft is unloaded in the reverse order of the loading procedure. The pans are normally unloaded bottom pan first, then top, to ensure that the most seriously injured patients are unloaded first.

10-28. Loading Patients Aboard the UH-1H/V Iroquois

a. Interior of the UH-1H/V Iroquois. This helicopter has several litter and seating configurations. A change, to meet operational requirements, can be made from one configuration to another within a few minutes. Facilities for carrying a tier of three litters loaded lengthwise in the aircraft are located on each side of the helicopter cargo compartment (Figure 10-32). This gives the helicopter a maximum litter capacity of six or a total of nine ambulatory patients. This configuration is normally used in rear areas to move large numbers of stable patients. The normal configuration for the aircraft is three litter patients loaded crosswise and four ambulatory patients. The maximum load the helicopter can lift must be considered. This load capacity varies with the altitude and temperature. The pilot advises the personnel on the ground of his load capacity.

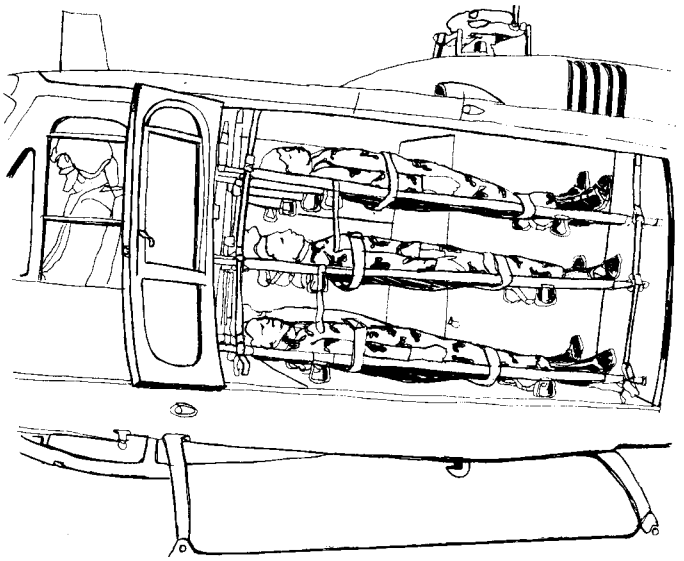

Figure 10-32. Interior view of UH-1H/V Iroquois six-litter configuration.

b. Guides for Loading Patients. Patients are normally loaded from the top tier down to the bottom tier, with the most seriously injured loaded last.

(1) Litter patients should be positioned in the helicopter according to the nature of their injuries or condition. Personnel aboard the helicopter supervise the loading of the aircraft.

(2) The most seriously injured patients are placed in the bottom litter tiers to permit in-flight care.

(3) Litter patients receiving IV fluids should not be positioned on the top row of litter tiers but should be placed as low as possible in the litter rack.

(4) Patients in Hare traction splints with splint supports and footrests must be loaded last and placed directly on the floor of the helicopter.

c. Loading and Securing Patients.

(1) In loading six litter patients with a four-man litter squad, the litters are loaded from both sides of the aircraft and from top to bottom. Figures 10-33 and 10-34 illustrate procedures for loading the right side. Figure 10-35 illustrates procedures for loading the left side.

(2) When the helicopter is equipped for mixed loading (Figures 10-36 through 10-38), three litters are loaded crosswise and four ambulatory patients are loaded in the side seats.

(*a*) When loading from the left, the litter squad moves to the side of the helicopter with the litter perpendicular to the cargo compartment; then the squad moves into a litter post carry. Bearers numbers 1 and 3 give their litter handles to the crew members who place the handles in the litter support brackets on the far side of the aircraft. Bearers numbers 2 and 4 secure the foot of the litter.

(*b*) After the first litter is loaded, the squad leaves the helicopter to obtain another litter patient. The second and third litters are loaded in the same way as the first one. After the three litter patients are loaded, the ambulatory patients are taken to the aircraft and directed to their seats.

d. Unloading Patients. The aircraft is unloaded in the reverse order of loading. The tiers are unloaded from bottom to top on one side and then on the other side. At the unloading command, the litter squad moves to the helicopter and the bearers take their proper places at the litter. The squad then performs its duties in the reverse order of loading.

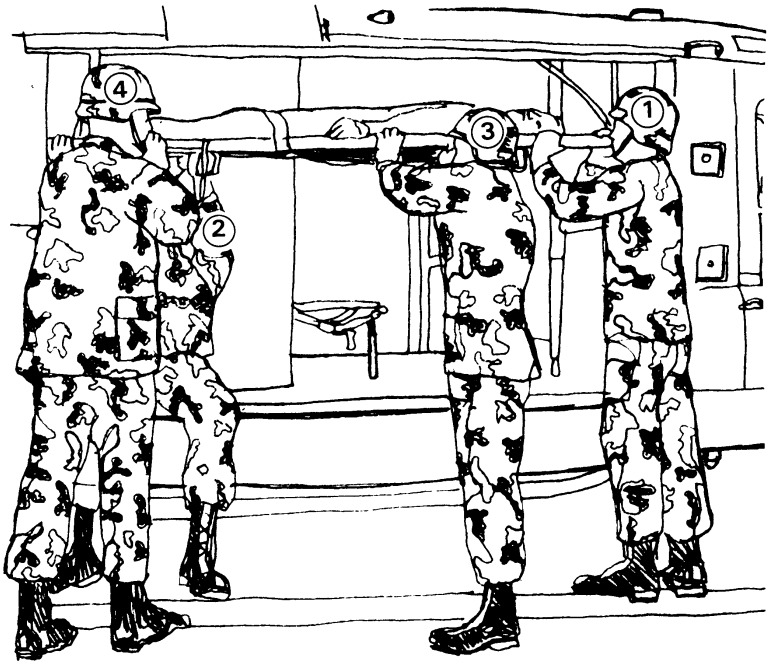

Figure 10-33. Loading air ambulance (UH-1H/V) from right side (step one).

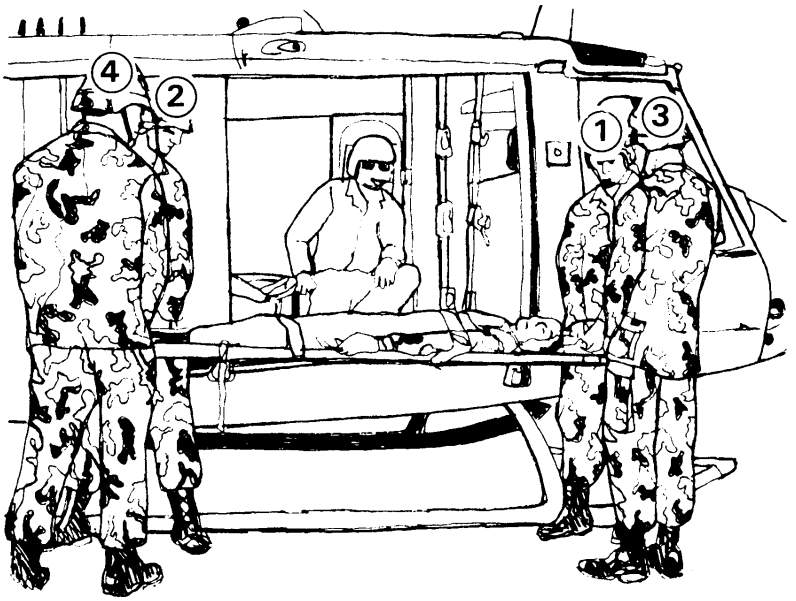

Figure 10-34. Loading air ambulance (UH-1H/V) from right side (step two).

Figure 10-35. Loading air ambulance (UH-1H/V) from left side.

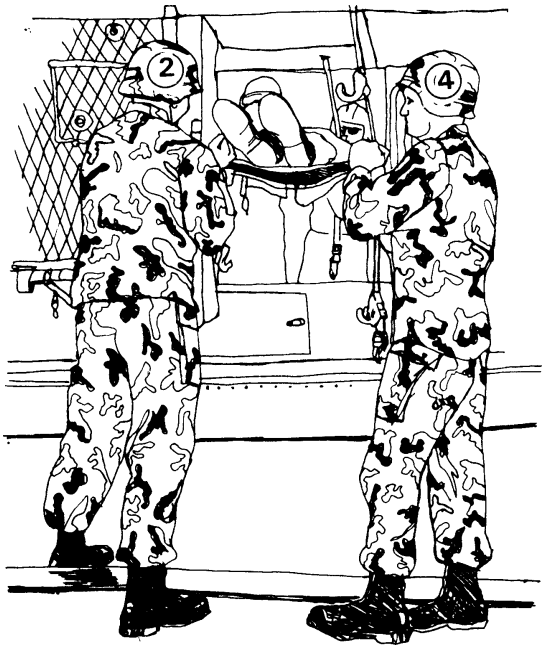

Figures 10-36. Loading litter crosswise in air ambulance (UH-1H/V).

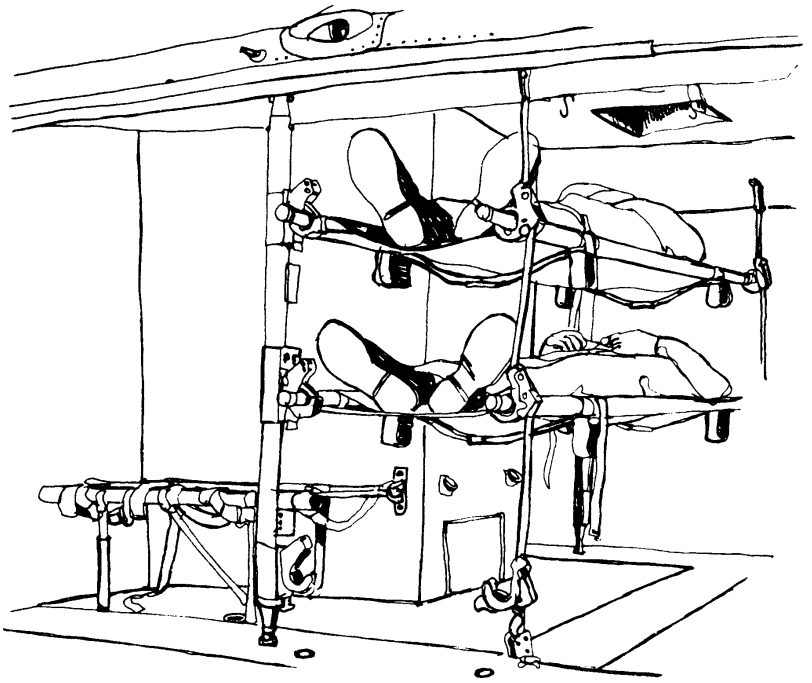

Figure 10-37. Air ambulance (UH-1H/V) with two litters loaded crosswise.

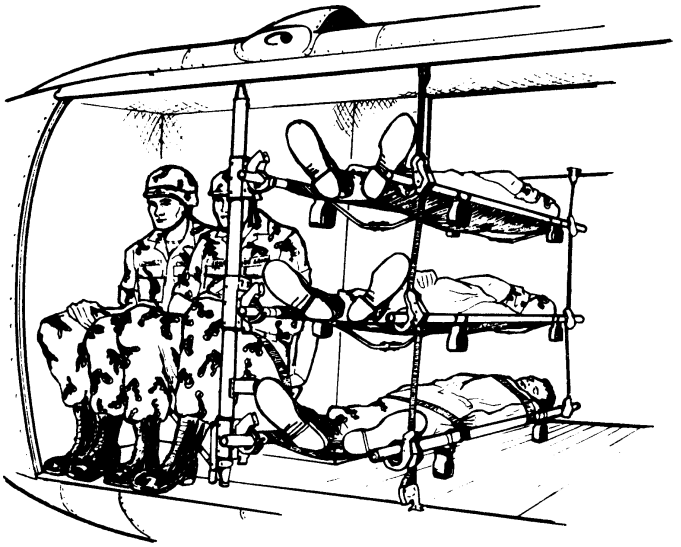

Figure 10-38. Air ambulance (UH-1H/V) with mixed load of litter and ambulatory patients.

Section IV. UNITED STATES ARMY NONMEDICAL AIRCRAFT

10-29. General

The US Army has both fixed-wing and rotary-wing aircraft. These aircraft are employed in both the CZ and EAC.

10-30. Army Fixed-Wing Aircraft

The capability of Army fixed-wing aircraft to land on and take off from selected small, unprepared areas permits the evacuation of patients from AOs which would be inaccessible to larger aircraft. These aircraft can fly slowly and maintain a high degree of maneuverability. This capability further enhances their value in forward areas under combat conditions. Army fixed-wing aircraft are limited in speed and range as compared with larger transport-type aircraft. When adequate airfields are available (Figures 10-39 and 10-40), fixed-wing aircraft may be used in forward areas for patient evacuation. This is a secondary mission for these aircraft which will be used only to augment dedicated air ambulance capabilities. (Field Manual1-300 discusses airfield operations.)

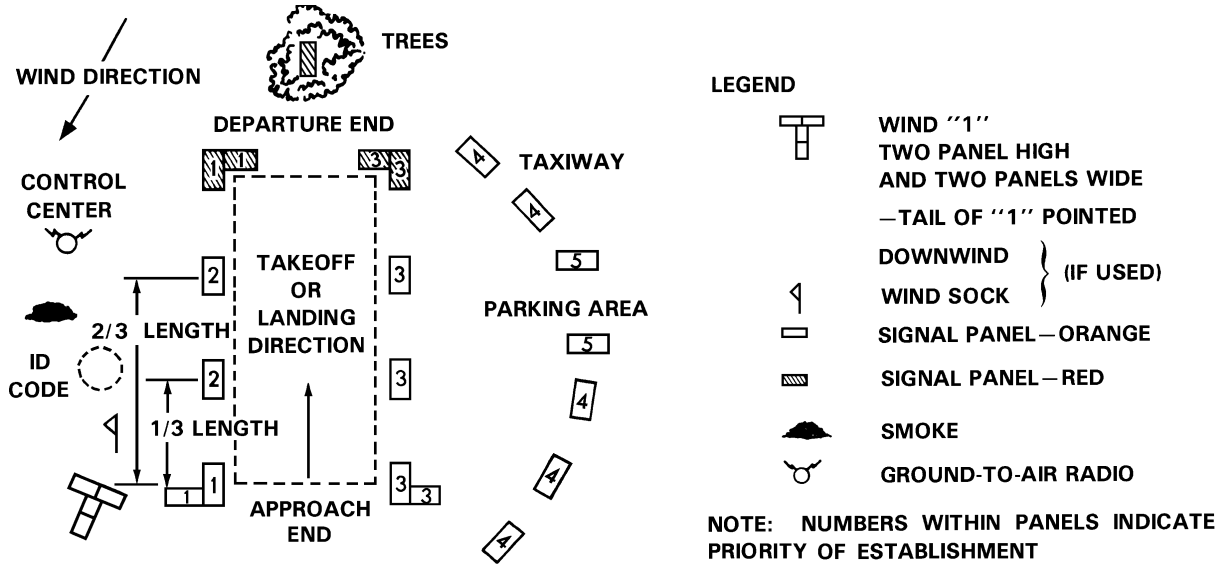

Figure 10-39. Marking and lighting of airplane LZ (day).

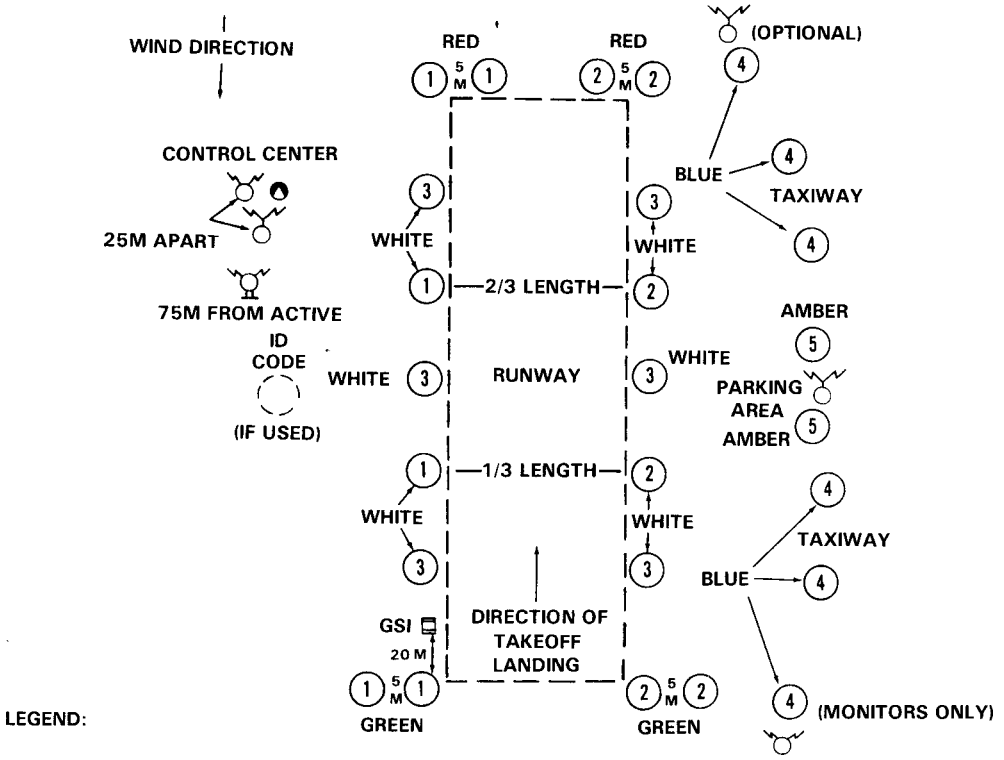

Figure 10-40. Marking and lighting of airplane LZ (night).

10-31. U-21/C-12 Aircraft

The U-21 Ute and C-12 Huron are used as utility (U-21) and passenger/cargo (C-12) aircraft. These aircraft are not normally employed as evacuation aircraft. In emergency situations, both of these aircraft can be configured to evacuate litter and ambulatory patients.

a. The *U-21 Ute* is a twin turbine, propeller-driven utility aircraft with a normal cruise speed of 210 knots and an endurance of over 5 hours flying time. It is capable of accommodating ten ambulatory patients, or three litter patients plus three ambulatory patients and a medic.

b. The *C-12 Huron* is the newest addition to the Army's fixed-wing aircraft inventory. Depending on the model, its normal cruise speed ranges from 240 to 260 knots with 5 to 6 hours endurance. It is capable of carrying eight ambulatory patients, or two litter and four ambulatory.

10-32. Loading Patients Aboard Army Fixed-Wing Aircraft

The personnel who transport patients to the landing strip load the patients aboard the aircraft. They may be required to assist in configuring the aircraft for litters. Litters are generally loaded from the top downward and from the front to the rear. The four-man litter squad plus the crew chief normally load these aircraft.

The crew chief or another member of the aircraft crew supervises the loading of all patients. Bearer number 2 normally enters the aircraft to assist the crew chief in loading the litters.

10-33. The CH-47 (Chinook)

a. The CH-47 (Chinook) helicopter (Figure 10-41), has a capacity of 24 litter patients, or 31 ambulatory patients, or a combination of litter and ambulatory patients. The aircraft's overall size and rotor blade diameter make it unsuitable for use in smaller or more confined areas.

b. The CH-47 helicopter should not be brought into a LZ that is smaller than 40 meters in diameter.

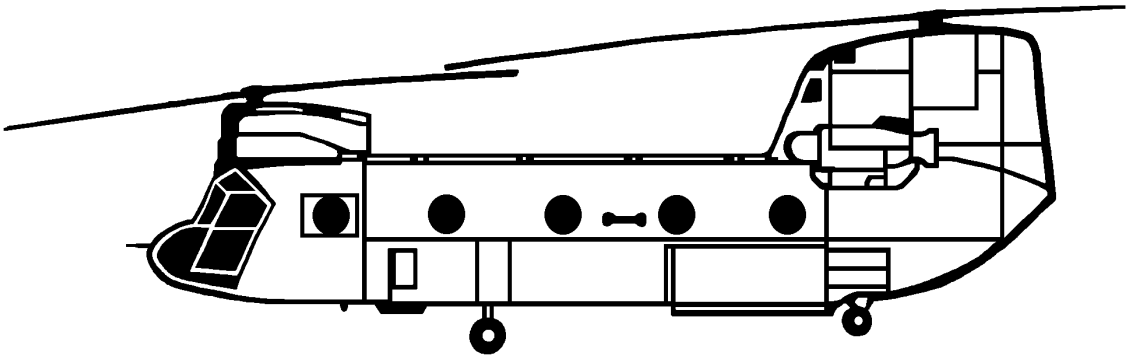

Figure 10-41. CH-47 (Chinook) helicopter.

10-34. Loading Patients Aboard the CH-47 (Chinook)

a. Interior of the CH-47 (Chinook).

(1) This helicopter's maximum capacity is 24 litter patients or 31 ambulatory patients. The 31 ambulatory patients are seated in the ten 3-man seats and the 1-man seat as shown in Figure 10-42. The two 1-man seats are used by crew members.

(2) When carrying 24 litter patients, the seats are replaced with six tiers of litters, four litters high. The two 1-man seats in the rear section should remain in place for the crew members. The 1-man seat at the left front may also be left in place provided it is needed.

(3) The combinations of litter and ambulatory patients the CH-47 is capable of accommodating are provided in Table 10-5.

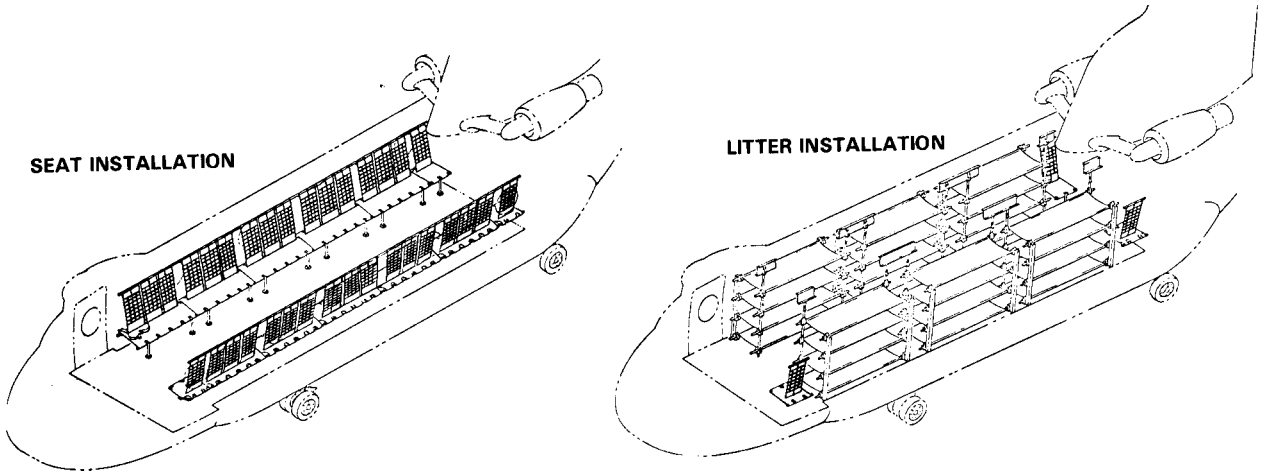

Figure 10-42. Interior view of CH-47 (Chinook).

Table 10-5. Litter and Ambulatory Configuration of the CH-47 (Chinook)

AMBULATORY PATIENTS	LITTER PATIENTS
31	0
25	4
19	8
16	12
10	16
4	20
1	24

b. Litter Support Kits. These kits are available for use in adapting the helicopter's interior to evacuate litter patients. These kits contain 12 litter poles, stored in the front of the cargo compartment and 12 litter straps, stored in overhead recesses. The poles contain safety attachments for securing them along the side walls of the compartment. The pull-down straps on the aisle side are secured to floor studs. Permanently attached to each litter pole and each strap are four litter support brackets with locking devices for securing litter handles in place. It is not necessary to remove the seats before adapting the compartment for litter patients. The seats can be folded against the wall and strapped in place.

c. Loading of Litter Patients. The loading of litter patients aboard the CH-47 helicopter is similar to loading patients aboard the UH-1H/V air ambulance except the litter squad is not assisted by the crew members. In a 2-man carry, the litter squad carries each litter patient through the lowered rear door and ramp to the litter rack where he is to be placed. The squad then moves into a 4-man carry and places the litter patient into the appropriate tier. The litter racks should be loaded from front to rear and from top to bottom. Litter patients requiring in-flight medical care should be positioned to facilitate this care. If the helicopter is to be loaded with a combination of litter and ambulatory patients, the litter patients should be positioned to the rear of the ambulatory patients whenever possible.

Section V. UNITED STATES AIR FORCE AIRCRAFT

10-35. General

Most USAF cargo aircraft can be used for AE. The aircraft used for forward airlift movement of troops and supplies may be reconfigured for the AE mission on the return flight (provided proper equipment is available). However, more likely USAF AE will be accomplished by dedicated (aircraft identified for AE only) or designated (mission scheduled specifically for AE) AE aircraft. The flexibility and responsiveness provided to AE by designated or dedicated AE missions also improves cargo and passenger airlift throughput by not pulling scheduled cargo missions from their scheduled routes to support AE.

10-36. Types of Air Force Transport Aircraft and Units

a. The C-130 Hercules Transport. This aircraft is a four-engine, turbo-propeller driven aircraft with a pressurized, air-conditioned cabin and a self-contained loading ramp. In the normal patient configuration, this aircraft can accommodate 50 litter and 27 ambulatory patients. This can be varied for as many as 70 litters with no ambulatory patients, or 85 ambulatory patients with no litters. These figures represent maximum patient capacity and would not be used routinely. The medical crew is normally provided by the USAF. It consist of two flight nurses and three AE technicians. These crews can be augmented by CCAT teams or personnel to care for the stabilized patients. The C-130 can land on and take off from short, austere runways. It can also be used on landing strips such as those found in forward base operations. Its normal use is within a TO for tactical and assault airlift. The ambulance bus maybe backed up to the ramp at the tail of the aircraft for easy enplaning of litter patients. The C-130 can also be used for intertheater airlift missions, if required. This aircraft is also used for HCAA operations.

b. The C-9A Nightingale. This aircraft is a T-tailed aeromedical airlift with two jet engines and a pressurized, air-conditioned cabin. The Nightingale is the military version of the DC-9 airliner with an interior specifically designed for in-flight patient care. It is the only aircraft in the USAF inventory that is dedicated to the medical evacuation mission. It has a self-contained patient enplaning ramp and can accommodate 40 litter patients, 40 ambulatory patients, or a combination of both. The ambulance bus maybe backed up to the ramp at the tail of the aircraft for easy enplaning of litter patients. This aircraft can operate from and between CZ, EAC, or CONUS from improved mile long runways. The medical crew normally consists of two flight nurses and three AE technicians. These crews can be augmented by CCAT teams or personnel to care for the stabilized patients.

c. The C-141 Starlifter. This aircraft is a four-engine, jet cargo transport aircraft. The cabin is pressurized, heated, or cooled, as required. The ambulance bus may be backed to the ramp at the tail of the aircraft for easy enplaning of litter patients. The C-141 can accommodate 103 litter patients, 147 ambulatory patients, or a combination of both. Normally, the aircraft will be configured to accommodate 48 litters and 38 seats. Maximum capacity is not routinely used, as crowding detracts from patient care. The usual medical crew is two flight nurses and three AE technicians. These crews can be augmented by CCAT teams or personnel to care for the stabilized patients. The C-141 is used for all missions of the AMC intertheater AE system. With the backhaul capacity, these intercontinental cargo aircraft provide AE from a TO to CONUS.

d. The C-5 Galaxy. The C-5 is the US's largest aircraft. The aircraft is normally a cargo mover, with a payload of over 200,000 pounds. If required, it could carry up to 70 ambulatory patients in its upper-aft passenger compartment in addition to its cargo load. This aircraft is considered an aircraft of opportunity and is only used if absolutely necessary.

e. The C-17A. This aircraft is a four-engine, jet driven aircraft with a pressurized, air-conditioned cabin and a self-contained loading ramp. In the normal patient configuration, this aircraft can accommodate 36 litter and 54 ambulatory patients. These figures represent maximum patient capacity. The medical crew is provided by the USAF. It consists of two flight nurses and three AE technicians. These crews can be augmented by CCAT teams or personnel to care for the stabilized patients. The C-17A can land and take off from short, austere runways. It can also be used on landing strips such as those found in forward base operations. Its normal use is within a TO for tactical and assault airlift. When available, the ambulance bus may be backed to the ramp at the tail of the aircraft for easy enplaning of litter patients. The C-17A can also be used for both intratheater and intertheater airlift missions, and will normally be maintained under AMC control.

f. The KC-135 and KC-10. These aircraft are four-engine, jet driven aircraft with a pressurized, air-conditioned cabin. In the normal patient configuration, this aircraft can accommodate 8 litters and 24 ambulatory patients. The litter patients would be loaded and secured to the floor of the aircraft for transport. Because these aircraft do not have loading ramps, either a ramp or cargo loader must be used to load and unload patients. The MASF or ASF/ASTS coordinate with the aerial port functions to arrange for loading equipment. The medical crews are provided by the USAF. These crews can be augmented by CCAT teams or personnel to care for the stabilized patients. The KC-135 and KC-10 operate from rear, fixed, improved runways. The benefits of these aircraft are their speed and range that exceeds the capability of any previously mentioned aircraft.

g. United States Air Force. The USAF has functionally organized units specifically designed to perform AE. There are two basic types of units. Either type of organization can provide for the operation of the AECC, AEOT, MASF, ASF/ASTS, in-flight medical crews, and AELT personnel.

(1) Aeromedical aircraft units (flights, squadrons, groups, or wings) combine personnel for operation of the aircraft and medical personnel in the same organization.

(2) Aeromedical evacuation units (flights, squadrons, or groups) are strictly medical organizations. These units possess no organic aircraft; they rely on the capability of cargo, passenger, and AE aircraft.

10-37. Aeromedical Evacuation Civil Reserve Air Fleet Aircraft

The AE Civil Reserve Air Fleet (CRAF) aircraft is the Boeing 767. The B-767 is a wide-body, long-range, twin-engine aircraft. In times of national conflict and on the National Command Authorities (NCA) activation, the second stage of AE CRAF, a large portion of the aircraft contracted, can be modified with predesigned ship sets to accommodate up to 87 litters. Once configured, the aircraft will be flown in a strategic role, evacuating patients from the TO to CONUS. The medical crew composition will consist of

two standard crews (four flight nurses and six aeromedical technicians). These crews can be augmented by CCAT teams or personnel to care for the stabilized patients.

10-38. Preparing Aircraft to Receive Patients

The aircraft crew is responsible for preparations to receive litter patients. Before the patients are loaded, the medical crew director inspects the aircraft to ensure that the required supplies and equipment are available and in operating order. The items inspected include—

- Accessories, such as litter straps, clamps, and stanchions.
- Rigging to ensure security.
- Medical equipment and other movable items to ensure that they are properly fastened to withstand flying conditions and that they constitute no hazard to occupants of the aircraft.
- Cabin-to-cockpit communications system to ensure that it is operative. This is accomplished by making a communications check with the pilot.
- Patients' survival and other equipment as it is loaded on the aircraft to ensure conformity with the existing instructions for the particular aircraft.

10-39. Developing the Loading Plan

a. The plan for loading patients aboard a large transport aircraft depends upon the capacity of the aircraft, the length of the flight, the severity of the patient's medical condition, and the number of litter and ambulatory patients to be transported. Transport aircraft carry the litters in tiers, normally three or four litters high. In developing a loading plan, the objective is to place each litter patient in the space that provides the most comfort for him without detracting from the ability to provide care. It is necessary to consider—

- Diagnosis.
- Preflight preparation or medication to be given the patient.
- Point where he is to be unloaded.
- Amount of care required during flight.

b. The following factors should be considered when developing the loading plan:

- Patients in plaster casts or splints must be placed on the side of the aircraft which would make the injured limb accessible for treatment.

- Litter patients with certain conditions requiring travel in a sitting or semiprone position require the same amount of space as two litters.

- Patients requiring bedpans, IV infusions, special treatment, or dressings during flight should be placed in the middle tier where they are more accessible for care.

- Patients who are unable to help themselves should, if possible, be located near the crew to facilitate visibility and observation.

- Patients suffering mental disturbances should be located in positions that afford maximum observation.

- Patients with communicable diseases should be loaded in the lower levels of the rear litter tiers to reduce airborne pathogens and to limit blood/body fluid distribution.

- Patients who are restless, such as those with head injuries, or those who are unconscious should be placed on the bottom tiers.

- Patients with coughs and those subject to airsickness should be placed on the bottom tier and positioned at the downwind end of the normal ventilation flow.

- After the patients are loaded, their personal effects should be stowed in the baggage compartment or the rear portion of the cabin.

- A preflight briefing is given to all patients. The medical crew director is responsible for ensuring that this briefing is conducted before each flight. The briefing should be complete and conducted in such a way as not to alarm patients who are flying for the first time.

10-40. Documentation Required

a. When a patient enters the USAF AE system, specific documentation is required to accompany the patient (Appendix H). The OMF is normally responsible for completing this documentation. In the Army CHS chain, this is normally accomplished at Echelon III facilities or higher.

b. Patients treated at Echelon II facilities will have a FMC, completed and it will be forwarded with the patient when evacuated. The DD Form 1380 provides a record of treatment the patient received. (Refer to Appendix C for information required for completing this form.)

c. The DD Form 600, *Patient's Baggage Tag*, is completed by the OMF. If the Echelon II facility does not have access to this form, all personal items and personal protective equipment accompanying the patient should be labeled with the patient's name and social security number (SSN).

d. The DD Form 601, *Patient Evacuation Manifest*, will be completed by the MASF if the Echelon II facility does not have access to this form.

e. The DD Form 602, *Patient Evacuation Tag*, is a record of the patient's medical treatment. When evacuating a patient aboard during HCAA operations, the DD Form 1380 will suffice as a treatment record if the DD Form 602 is not available.

f. Patient classification codes used in completion of these forms are contained in Appendix K.

10-41. Patient Assessment Information

Medical assessment considerations for medically evacuating a patient by air (in a pressurized aircraft) are provided in Appendix K.

APPENDIX A

EFFECTS OF GENEVA CONVENTIONS ON MEDICAL EVACUATION

A-1. General

a. The conduct of armed hostilities on land is regulated by customary international law and lawmaking treaties such as the Hague and Geneva Conventions. The rights and duties set forth in the Conventions are part of the supreme law of the land. The United States is obligated to adhere to these obligations even when an opponent does not. It is a DOD and Army policy to conduct operations in a manner consistent with these obligations.

b. An in-depth discussion of the provisions applicable to medical units and personnel is provided in FM 8-10. This appendix discusses only those articles or actions which affect medical evacuation operations. Questions regarding the implementation and interpretation of applicable treaties should be directed to the servicing Staff Judge Advocate.

A-2. Distinctive Markings and Camouflage of Medical Facilities and Evacuation Platforms

This paragraph implements STANAG 2454 and QSTAG 512.

a. All US medical facilities and units, except veterinary, display the distinctive flag of the Geneva Conventions. This flag consists of a red cross on a white background. It is displayed over the unit or facility and in other places as necessary to adequately identify the unit or facility as a medical facility.

NOTE

The Geneva Conventions authorizes the use of the following distinctive emblems on a white background: Red Cross; Red Crescent; and Red Lion and Sun. In operations conducted in countries using an emblem other than the Red Cross on a white background, US soldiers must be made aware of the different official emblems. United States forces are legally entitled to only display the Red Cross. However, commanders have authorized the display of both the Red Cross and the Red Crescent to accommodate HN concerns and to ensure that confusion of emblems would not occur. Such use of the Red Crescent must be in a smaller size than the Red Cross.

This paragraph implements STANAG 2931.

b. Camouflage of medical facilities (medical units, medical vehicles, and medical aircraft on the ground) is authorized when the lack of camouflage might compromise tactical operations. The marking of facilities and the use of camouflage are incompatible and should not be undertaken concurrently.

- If the failure to camouflage endangers or compromises tactical operations, the camouflage of medical facilities may be ordered by a NATO commander of at least brigade level or equivalent. Such an order is to be temporary and local in nature and is rescinded as soon as circumstances permit.

- It is not envisioned that fixed, large medical facilities will be camouflaged.

A-3. Medical Aircraft

a. Medical aircraft exclusively employed for the removal of wounded and sick and for the transport of medical personnel and equipment shall not be attacked, but shall be respected by the belligerents, while flying at heights, times, and on routes specifically agreed upon between the belligerents concerned.

b. The medical aircraft shall bear, clearly marked, the distinctive emblem together with their national colors on their lower, upper, and lateral surfaces.

c. Unless agreed otherwise, flights over enemy or enemy-occupied territory are prohibited.

d. Medical aircraft shall obey every summons to land. In the event that a landing is thus imposed, the aircraft with its occupants may continue its flight after examination, if any.

e. In the event of involuntary landing in enemy or enemy-occupied territory, the wounded and sick, as well as the crew of the aircraft, shall be prisoners of war; medical personnel will be treated as prescribed in these conventions.

A-4. Self-Defense and Defense of Patients

When engaging in medical evacuation operations, medical personnel are entitled to defend themselves and their patients. They are only permitted to use individual small arms.

a. The mounting or use of offensive weapons on dedicated medical evacuation vehicles and aircraft jeopardizes the protections afforded by the Geneva Conventions. These offensive weapons can include, but are not limited to—

- Machine guns.

- Grenade launchers.

- Hand grenades.
- Light antitank weapons.

b. Medical personnel are only permitted to fire in their personal defense and for the protection of the wounded and sick in their charge against marauders and other persons violating the law of war.

A-5. Enemy Prisoners of War

a. Sick, injured, or wounded EPWs are treated and evacuated through normal medical channels, but are physically segregated from US, allied, or coalition patients. The EPW patient is evacuated from the CZ as soon as his medical condition permits.

b. Personnel resources to guard EPW patients are provided by the echelon commander. Medical personnel do not guard EPW patients.

A-6. Compliance with the Geneva Conventions

a. The US is a party to the 1949 Geneva Conventions. Two of these Conventions afford protection for medical personnel, facilities, and evacuation platforms (to include aircraft on the ground). All CHS personnel should thoroughly understand the provisions of the Geneva Conventions that apply to medical activities. Violation of these Conventions can result in the loss of the protection afforded by them. Medical personnel should inform the tactical commander of the consequences of violating the provisions of these Conventions. The consequences can include the following:

- Medical evacuation assets subjected to attack and destruction by the enemy.
- Combat health support capability degraded.
- Captured medical personnel becoming prisoners of war rather than retained persons. They may not be permitted to treat fellow prisoners.
- Loss of protected status for medical unit, personnel, or evacuation platforms (to include aircraft on the ground).

b. Because even the perception of impropriety can be detrimental to the mission and US interests, CHS commanders must ensure that they do not give the impression of impropriety in the conduct of medical evacuation operations. For example, if a medical evacuation commander included in the TSOP rules governing the use of automatic or crew-served weapons, it would give the impression that the unit possessed and intended to use these types of weapons. Under the provisions of the Geneva Conventions, medical units are only authorized individual small arms for use in the defense of the patients under their care and for themselves. Even though the unit did not possess these types of weapons, the entry in the TSOP could be misinterpreted and a case made that the commander intended to use these weapons in violation of the Geneva Conventions.

APPENDIX B

MEDICAL EVACUATION ESTIMATE AND PLAN

Section I. MEDICAL EVACUATION ESTIMATE

B-1. General

a. The CHS estimate and plan considers all AMEDD functional areas during the planning process. The medical evacuation portion of the CHS plan is an integral part of providing a seamless health care delivery system from the point of injury or wounding through successive echelons of care to the definitive treatment in CONUS, if required. Depending upon what level of command the medical evacuation estimate and plan is developed will determine whether it is written out in detail, overlays developed, or is provided verbally. Regardless of the mode of dissemination, the same planning steps and considerations should be used.

b. Refer to FM 8-42 and FM 8-55 for additional information on CHS planning.

B-2. Sample Format for the Medical Evacuation Estimate of the Situation

(Classification)

References: *Maps, overlays, charts, or other documents required to understand the plan. Reference to a map will include the map series number and country or geographical area, if required; sheet number and name, if required; edition; and scale.*

1. **MISSION:** (*Statement of the medical evacuation mission.*)

2. **SITUATION AND CONSIDERATIONS:**

a. Enemy Situation. (*In a traditional military operation, this paragraph discusses the capabilities and weakness of the enemy. However, in stability operations and support operations, a true* ***enemy*** *may not exist. This paragraph can be modified to discuss issues such as the terrorist threat, insurgents, and opposition groups. In some situations, such as disaster relief operations, this paragraph can discuss negative factors impacting on the mission. These negative factors can include looters and lawlessness, continued destruction from natural or man-made causes [such as continued flooding, aftershocks, and explosions], or an increase in the medical threat as arthropod and rodent vectors increase.*)

(1) Strength and disposition. (*The size of the opposition force and its placement on the battlefield is important during the planning process for medical evacuation operations. When evacuation routes are selected, caution must be exercised to ensure medical evacuation assets are not compromised by going through enemy-held territory or by being ambushed by isolated pockets of resistance. Further, this information is vital in determining if medical evacuation assets [both ground and air] will require a security escort provided by CS forces before entering areas of the battlefield.*)

(Classification)

(Classification)

(2) Combat efficiency. (*Information on actual combat units or other forces, their training status, and their level of expertise and experience can be identified here. The level of CHS training and the development of a health care delivery system can also be included.*)

(3) Capabilities. (*This paragraph should discuss the potential capability to interfere with or disrupt medical evacuation operations.*)

(4) Logistics situation. (*This can include information on how well supplied the enemy/opposition force is with food, clothing, or other vital logistics factors. It may also include the financial backing and availability of future support from outside individuals/groups/nations.*)

(5) State of health. (*The state of health of the enemy is an important factor. An army that is not healthy or that is fatigued, undernourished, and stressed from continuous operations may not have the will to continue the battle. In stability operations and support operations, the health of the population and the ability to care for them may be a factor in the political unrest in a nation.*)

(6) Weapons. (*This should include a discussion of the enemy's weapons that present the greatest threat to air and ground evacuation personnel and vehicles. Ground assets are more likely to face a small arms threat while performing their mission; air assets are vulnerable to surface-to-air weapons and when on the ground to small-arms fire.*)

b. Friendly Situation.

(1) Strength and disposition. (*This should include all forces [US, allied, coalition, and HN] and should be maintained on overlays. It may also include liaison officers, interpreter support, and coordination requirements.*)

(2) Combat efficiency. (*The health of the command has a significant impact on this factor. Additionally, when there are significant numbers of DNBI casualties, the medical evacuation workload will increase.*)

(3) Present and projected operations. (*Medical evacuation planners must be familiar with plans for current and projected operations. A risk management assessment of current and projected operations is conducted [Appendix L]. Patient collecting points and AXPs must be designated during the planning process. Medical evacuation planners must also be able to anticipate changing requirements to ensure continuous medical evacuation is available to the supported force.*)

(4) Logistics situation. (*Since medical evacuation vehicles conduct CHL backhaul, the medical evacuation planner must maintain visibility of the current CHL situation.*)

(Classification)

(Classification)

(5) Rear area protection plan. (*Medical units play an important role in the rear area protection plan and should be included in the planning process.*)

(6) Weapons. (*Medical units only have small arms for self-defense and defense of their patients. Medical vehicles and aircraft should not carry any automatic or crew-served weapons; to do so would result in the loss of the protections afforded under the Geneva Conventions for the unit, medical personnel, and patients under its care.*)

c. Characteristics of the Area of Operations.

(1) Terrain. (*This paragraph should discuss any aspects of the terrain that will either hinder or enhance the execution of the evacuation mission. It should discuss both natural and man-made terrain, as medical evacuation in built-up areas can pose significant challenges not found on a natural battlefield. Medical personnel must be able to recover injured and wounded soldiers from below ground and from upper levels of man-made structures. If the plan requires combat within urbanized terrain, armor ambulances provide added protection for medical personnel and their patients; augmentation should be requested if armor ambulances are not organic to the unit. If additional resources will be required to accomplish evacuation due to impassable or difficult terrain [such as in mountain operations where additional litter bearers and medical personnel are required], it should also be addressed here. Further, the type of terrain to be traversed, such as rugged mountain or jungle swamps may require a patient [who would otherwise be ambulatory] to be transported on a litter until easier terrain is encountered.*)

(2) Weather and climate. (*This should include a discussion of current weather conditions and seasonal variants. Weather conditions impact both ground and air evacuation operations; however, the most significant impact may be on aeromedical evacuation as severely inclement weather can ground all aircraft. It should also discuss the impact that the weather has on the terrain [such as rivers being frozen in winter or tundra becoming impassable in spring]. The climate may pose problems with acclimation as well as place additional requirements to sustain personnel during evacuation on evacuation assets [litter evacuation in the mountains in extreme cold weather operations may require warming tents and the capability to sustain the patient during nighttime when evacuation is difficult].*)

(3) Dislocated civilian population and enemy prisoners of war. (*Dislocated civilians fleeing an area of hostilities can clog roadways leading away from the conflict area. This congestion on road networks may make evacuation along these routes almost impossible. The establishment of camps to sustain these categories of personnel may interrupt the road network requiring detours and lengthened evacuation times. Injured, ill, or wounded EPW are evacuated using the same evacuation means but are segregated from US, allied, or coalition patients. Coordination for nonmedical guards for EPW patients being evacuated through medical channels must be accomplished.*)

(4) Flora and fauna. (*This should include a discussion of indigenous plants and wildlife that pose a threat to evacuation crews.*)

(Classification)

(Classification)

(5) Disease. (*Medical evacuation crews must be aware of the endemic and epidemic diseases in the AO. They should be taking any prescribed chemoprophylaxis and practicing individual PVNTMED measures [PMM].*)

(6) Local resources. (*Medical evacuation crews should be aware of any potential services available in the civilian community and appropriate policy guidance on how to obtain these services in an emergency [such as fuel, repair parts, or water]. The medical evacuation planner should consider the availability of HN commercial transportation assets to augment medical evacuation assets, if required by a mass casualty situation.*)

(7) Other. (*This may include language capabilities and liaison or interpreter requirements due to a multinational force environment or interaction with HN personnel; customs, ethnic issues, or religious beliefs of the population or participating forces; the role and support requirements for interagency operations; or the relationship and interaction with private volunteer organizations [PVOs] and nongovernmental organizations [NGOs].*)

d. Strengths to be Supported. (*A determination of eligible beneficiaries outside of the traditionally supported personnel is required in multinational operations [refer to Appendix M for information on multinational operations], stability operations, and support operations.*)

(1) United States uniformed services.

(a) Army.

(b) Navy.

(c) Air Force.

(d) Marines.

(e) Coast Guard.

(2) Department of Defense civilians.

(3) Other United States Government employees.

(4) Allied forces.

(5) Coalition forces.

(6) Host-nation forces.

(Classification)

(Classification)

(7) Enemy prisoners of war.

(8) United States Government contract personnel.

(9) Indigenous civilians.

(10) Refugees.

(11) Detainees.

(12) Internees.

(13) Nongovernmental organization personnel.

(14) Private volunteer organizations personnel.

(15) Others.

e. Health of the Command.

(1) Acclimation of troops. (*Medical evacuation crews require acclimation when introduced into an AO where the temperature range and elevation are different from their home station. Medical evacuation operations involve heavy lifting and may require extended periods of time to complete. To reduce the risk of injury to litter bearers and to facilitate the evacuation effort, medical and nonmedical personnel engaged in these operations should be acclimated to the AO and a work/rest schedule should be developed and implemented.*)

(2) Presence of disease. (*The presence of disease impacts medical evacuation operations in two areas. The presence of disease in the AO [usually at subclinical levels in the native population] contributes to the incidence of disease manifesting itself within the supported force. As DNBI rates increase, so do the requirements for medical evacuation. Medical evacuation personnel are also susceptible to the endemic and epidemic diseases within the AO and/or multinational force. High rates of DNBI for medical personnel will adversely impact the medical evacuation capability.*)

(3) Status of immunizations and/or chemoprophylaxis. (*Commanders must ensure appropriate measures are taken to protect their soldiers from DNBI. The records of replacement personnel need to be screened to ensure all required immunizations have been received and appropriate chemoprophylaxis/barrier creams for the AO initiated/provided.*)

(4) Status of nutrition. (*The nutrition status of the troops involved impacts on the susceptibility to disease and environmental injuries, morale, and fatigue. The medical evacuation commander must also ensure that his evacuation crews carry sufficient supplies of meals, ready to eat [MREs] to sustain themselves*

(Classification)

and their patients should delays in evacuation be experienced [such as delays resulting from shifts in the battle or inclement weather].)

(5) Clothing and equipment. (*Special requirements for clothing and equipment to support a particular operation should be obtained prior to the beginning of the operation [for example, cold weather clothing for extreme cold weather operations; additional blankets for patients being transported* (*either to adding padding or warmth*)*; or block and tackle equipment for medical evacuation operations conducted in mountainous terrain or in built-up areas].*)

(6) Fatigue. (*Mandatory work/rest schedules and sleep plans for air crews and ground evacuation personnel must be developed and implemented.*)

(7) Morale.

(8) Status of training. (*This can include any specialized training required for the conduct of a specific operation [for example: helicopter crews require deck-landing qualifications to perform shore-to-ship evacuation with US Navy ships or orientation to the social, political, economic, religious, and ethnic issues of a HN or supported population or training nonmedical personnel in the proper techniques for carrying litters].*)

(9) Other as appropriate.

f. Assumptions. (*Assumptions may be required as a basis for initiating, planning, or preparing the estimate. Assumptions are modified to factual data when specific planning guidance becomes available.*)

g. Special Factors.

3. **MEDICAL EVACUATION MISSION ANALYSIS:**

a. Patient Estimates. (*Indicate rates and numbers by type unit/division/corps/EAC.*)

(1) Number of patients anticipated. (*The anticipated number of patients affects the number and type of medical evacuation resources required.*)

(2) Distribution within the area of operations. (*Distribution within the AO is an important consideration because varying types of terrain will generate different requirements for support. Operations conducted in mountainous terrain rely heavily on manual and litter evacuation techniques, are labor intensive, and require more time to complete. Differences in road composition, traffic density, and abundance/absence of paved roads will impact differently on the type of support required. Further, if the*

(Classification)

distance between Echelon II and Echelon III MTFs exceeds the capability of US Army air ambulances, the use of the HCAA should be anticipated and preplanned. Coordination with the USAF is required to implement this procedure [see paragraph c(10) below].)

(3) Distribution in time during the operation (evacuation time). (*As the battle progresses over time and space, medical evacuation assets may be reallocated to support the units in contact. The medical evacuation plan must be sufficiently flexible to enable the commander to shift resources as required.*)

(4) Areas of patient density. (*Areas with a high patient density may require augmentation of the medical evacuation assets supporting that location.*)

(5) Possible mass casualties. (*Mass casualty situations should be anticipated when possible. Evaluation of the general threat and medical threat in the AO can facilitate the medical evacuation planner in forecasting evacuation requirements. When dealing with mass casualty situations, the use of nonmedical transportation platforms should be included. Augmentation of these vehicles by medical personnel to provide en route care will assist in reducing the deterioration of the* ***patient's medical condition*** *until arrival at an MTF.*)

(6) Lines of patient drift. (*This indicates what routes injured soldiers are most likely to take from the battlefield. It is usually the most direct route over the least demanding terrain, such as at the base of the hill rather than over the hill where climbing would be required.*)

(7) Evacuation routes/corridors. (*Evacuation routes should be preplanned, indicated on the medical evacuation overlay, and reconnaissance accomplished. Routes that provide lucrative targets, have significant obstacles to circumvent, or will be unduly congested due to fleeing refugees or other displaced persons should only be used if no other routes are available.*)

b. Support Requirements. (*This paragraph discusses the type of support required for the operation and its command relationship. Specific guidance on trigger points and release points from a particular category of support should be included.*)

(1) Direct support.

(2) General support.

(3) Operational control.

c. Medical Evacuation Procedures.

(1) Evacuation overlays. (*Evacuation overlays must be developed to facilitate the evacuation effort. Both supporting and supported units must maintain and update [as required] overlays throughout the operation.*)

(Classification)

(Classification)

(2) Communications. (*Medical evacuation frequencies must be designated at the outset of the operation. Requirements for liaison officers, A2C2, and interpreters must be anticipated.*)

(3) Patient collecting points. (*Location, staffing, and activation trigger [such as crossing a phase line] must be known to supported and supporting units*.)

(4) Ambulance exchange points. (*Location, staffing, and activation trigger [such as crossing a phase line] must be known to supported and supporting units*).

NOTE

If an AXP is staffed with a treatment element, it is no longer considered to be an AXP but rather it becomes the forward element of a BAS or clearing station. The AXP is only a location on the ground where the patient is transferred from one evacuation platform to another. If it is staffed, it is usually staffed by one member of the evacuation platoon to direct returning ambulances to the area where the last ambulance departed from. The element designating the AXP is responsible for staffing it. Ambulance exchange points may be rendezvous points to be used only once during the operation.

NOTE

Ambulance exchange points should not be used as resupply points for Class VIII. Planning on pushing Class VIII to these points may result in the loss of the Class VIII materiel, as there may not be anyone at the point to receive the supplies.)

(5) Ambulance shuttle system. (*The ambulance [or litter] shuttle system is a management tool to facilitate the medical evacuation of forward areas. It is discussed in depth in Chapter 4.*)

(6) Manual evacuation. (*Requirements for manual evacuation should be anticipated. Manual evacuation should only be used for short distances as it is both time-consuming and difficult for the bearers to sustain.*)

(7) Litter evacuation. (*In some terrain, litter evacuation may be the only means available to move the patient from the point of injury. This technique is used quite frequently in jungle, swamp, or*

(Classification)

(Classification)

mountainous terrain. As soon as it is possible, the patient should be transferred to another means of evacuation such as a pack animal, vehicle, aircraft, or watercraft. Litter evacuation is time-consuming and the personnel acting as litter bearers require frequent rest breaks. If the distance to be covered by litter teams is excessive, a litter shuttle system should be implemented. When possible, a medic should be part of the litter team to provide continuous evaluation and en route care if required.)

(8) Mass casualty situation. (*Specific guidance should be provided for procedures to be used during these situations; for example, only MINIMAL category personnel should be evacuated using nonmedical evacuation assets without augmentation of medical personnel.*)

(9) Shore-to-ship evacuation. (*As mentioned earlier under training, requirements for deck-landing qualifications, designated frequencies, or other operationally specific information should be included.*)

(10) High capacity air ambulance operations. (*This paragraph needs to address the coordination required with the USAF and DMOC to implement this type of operation, the trigger mechanism, the length of time between the preplanned flights, documentation required for evacuation aboard a USAF aircraft and who will complete it [OMF or MASF], location of the MASF, and what unit will receive the incoming patients at the corps airfield [if known].*)

d. Casualty Evacuation (Transportation).

(1) Medical augmentation. (*Units and/or facilities capable of providing medical augmentation support should be identified and tasked as appropriate.*)

(2) Manual evacuation.

(3) Litter evacuation. (*A medic should be included as a member of the litter team when there is a significant distance to be covered.*)

(4) Pack animals. (*In some remote locations, the use of pack animals may be the most feasible form of transportation from the point of injury to a place where vehicles, aircraft, or watercraft become accessible. Whenever possible, medical personnel should accompany patients evacuated in this manner.*)

(5) Nonmedical vehicle. (*Nonmedical vehicles which could be preplanned for use for casualty transport should be identified. Further, guidance on the use of vehicles of opportunity should also be discussed.*)

(6) Nonmedical aircraft. (*Nonmedical aircraft which could be preplanned for use for casualty transport should be identified. Guidance on the use of aircraft of opportunity should also be discussed.*)

(Classification)

(Classification)

(7) Nonmedical watercraft. (*Nonmedical boats, ships, or other watercraft which could be preplanned for use for casualty transport should be identified. Further, guidance on the use of these platforms of opportunity should also be discussed.*)

e. Resources Available.

(1) Organic.

(2) Assigned.

(3) Attached.

(4) Air Force.

(5) Navy.

(6) Marines.

(7) Coast Guard.

(8) Allied.

(9) Coalition.

(10) Host nation.

(11) Other governmental agencies

(12) Nongovernmental agencies.

(13) Other.

f. Use of Smoke and Obscurants. (*In most cases, medical units will not have a high priority for the use of smoke and obscurants [Appendix F]; however, if the supported combat or CS units have it planned, medical evacuation units can take advantage of the situation to clear the battlefield of patients. Guidance on the use of colored smoke to identify the pickup location for patients can also be provided.*)

g. Courses of Action. (*As a result of the above considerations and analysis, determine and list all logical courses of action [COAs] which will support the commander's OPLAN and accomplish the medical evacuation mission. Consider all TSOPs, policies, and procedures that are in effect. Courses of action are expressed in terms of WHAT, WHEN, WHERE, HOW, and WHY.*)

(Classification)

(Classification)

4. **EVALUATION AND COMPARISON OF COURSES OF ACTION:**

a. *Compare the probable outcome of each COA to determine which one offers the best chance of success. This may be done in two steps:*

(1) *Determine and state those anticipated difficulties which will have a different effect on the COAs listed.*

(2) *Evaluate each COA against each significant difficulty to determine the strengths and weaknesses inherent to each.*

b. *Compare all COAs listed in terms of significant advantages and disadvantages, or in terms of the major considerations that emerged during the above evaluation.*

5. **CONCLUSIONS:**

a. *Indicate whether the mission set forth in paragraph 1 can* (*cannot*) *be supported.*

b. *Indicate which COA can best be supported from the medical evacuation standpoint.*

c. *List the limitations and deficiencies in the preferred COA that must be brought to the commander's attention.*

d. *List factors adversely affecting the completion of the mission.*

/s/

Medical Evacuation Unit Commander

Annexes (*as required*)
DISTRIBUTION:

(Classification)

Section II. MEDICAL EVACUATION ANNEX TO THE COMBAT HEALTH SUPPORT PLAN

B-3. General

Once the estimate is completed, the medical evacuation annex to the CHS plan can be developed. A discussion of the CHS plan is provided in FM 8-42 and FM 8-55.

B-4. Sample Format for the Medical Evacuation Annex to the Combat Health Support Plan

(Classification)

MEDICAL EVACUATION

1. **CONCEPT OF SUPPORT:** (*Discusses the type of support [organic, DS, GS, or OPCON].*)

2. **ASSIGNMENTS, ATTACHMENTS, AND OPERATIONAL CONTROL:** (*Discusses the types of units/teams available and their relationship to the C2 headquarters.*)

3. **ASSIGNMENT OF RESPONSIBILITIES:**

a. Mission. (*Delineates the mission and responsibilities of medical evacuation teams and units.*)

b. Location. (*Delineates the area of responsibilities for forward-sited evacuation assets. This information can be depicted on overlays.*)

c. Trigger Mechanisms. (*Discusses the activation of PCPs, AXPs, and HCAA operations based on predetermined events.*)

d. Coordination Requirements. (*Discusses liaison requirements, interpreter requirements, and coordination requirements with allied, coalition, and HN forces, PVOs, and NGOs, as well as coordination requirements with the sister Services and other governmental agencies.*)

(Classification)

APPENDIX C

USE OF DD FORM 1380, US FIELD MEDICAL CARD SAMPLE FORMAT

C-1. General

The FMC (DD Form 1380) (AR 40-66) is used to record basic patient identification data and to describe the problem requiring medical attention and the medical care provided. The FMC is made so that it can be attached to the casualty.

This paragraph implements STANAGs 2132 and 2350 and QSTAGs 230 and 470.

C-2. Use of the US Field Medical Card

a. The combat medic first attending battle casualties will initiate DD Form 1380 by completing blocks 1, 3, 4, 7, and 9 and by entering as much information in the remaining blocks as time permits. The combat medic enters his initials in the far side of the signature block (Block 11).

NOTE

1. The ambulance crew must be familiar with completing this form and should maintain a stock of them in the ambulance. The ambulance crew may be the first medical personnel to attend to a casualty.

2. When morphine is administered to a casualty in the field environment the dose, ZULU time, date, route or entry, and name of the drug must be entered onto the DD Form 1380. Additionally, the combat medic (or other health care provider) must mark the casualty with the letter "M" and the hour of injection (such as "M 0830") on the forehead with a skin pencil or another semipermanent marking substance. The empty syrette, injection device, or its envelope should be attached to the casualty's clothing.

b. Aid stations record medical care provided on the DD Form 1380 any time that the aid station is operational and does not have access to the patient's health record (HREC) or outpatient treatment record (OTR).

c. Treatment teams providing Echelon II medical care use the DD Form 1380 any time that care is provided and the patient's HREC is not readily available. If a patient is treated in a holding section or is expected to return for additional treatment or evaluation, an OTR may be initiated using standard medical record forms. The OTR need not be filed in a DA Form 3444-series record. When the patient is returned

to duty or when treatment and evaluation are completed, the medical officer summarizes care provided on DD Form 1380 and this form is disposed of according to the procedures outlined in AR 40-66. When the patient is evacuated, treatment will be summarized on DD Form 1380 and it (along with all forms and records initiated) will accompany the patient during evacuation.

d. Medical treatment facilities providing Echelons III and IV care will use DD Form 1380 to record outpatient care provided when the patient's HREC is not readily available (as stated in *a, b,* and *c* above.)

C-3. Preparation of the Field Medical Card

a. A medical officer will complete DD Form 1380 or supervise its completion. When DD Form 1380 has been initiated by a medic, the supervising AMEDD officer will complete, review, and sign the DD Form 1380.

b. In the TO, DD Form 1380 will be prepared for any patient treated at BASs, clearing stations, and MTFs and may also be used for *carded for record only* (CRO) cases. When evacuated, the DD Form 1380 will be attached to the patient's clothing, where it will remain until the patient arrives at a hospital or RTDs. If the patient dies, DD Form 1380 will remain attached to the body until internment, when it is removed. If the body cannot be identified, the registration number given the remains by the Mortuary Affairs element will be noted on DD Form 1380.

c. Under combat conditions, DD Form 1380 for patients being evacuated may be only partially completed. Otherwise, all entries should be completed as fully as possible.

d. All abbreviations authorized for use on DA Form 3647 may also be used on DD Form 1380. However, except for those listed below, abbreviations may not be used for diagnostic terminology.

- Abr W — abraded wound.
- Cont W — contused wound.
- FC — fracture (compound) open.
- FCC — fracture (compound) open comminuted.
- FS — fracture simple (closed).
- LW — lacerated wound.
- MW — multiple wounds.
- Pen W — penetrating wound.
- Perf W — perforating wound.

- SL — slight.
- SV — severe.

e. The FMC may also be used for CRO cases. Certain cases not admitted to an MTF are CRO. For CRO cases, DA Form 3647 or the FMC is prepared and a register number assigned. When DA Form 3647 is used, Items 7, 10, 14, 24, 27, 30, and the name of the admitting officer need not be completed. When the FMC is used, Item 11 need not be completed.

f. Figure C-1 provides a sample DD Form 1380 completed by the combat medic. Figure C-2 is a sample of reassessment accomplished at the BAS.

g. Instructions for the completion of DD Form 1380 are contained in Table C-1. Officer and enlisted grade structure to be used in completing this form are contained in Table C-2.

C-4. Disposition of Field Medical Cards

a. In a CZ, if the DD Form 1380 is generated but the patient is not admitted to a hospital, the form will be sent to the medical C2 headquarters or the command surgeon for statistical coding as specified in the TSOP. Once the DD Form 1380 is coded, it is forwarded for inclusion in the individuals records. (Specific addresses and disposition instructions are provided in AR 40-66 and AR 25-400-2).

b. When a patient is evacuated and upon his arrival at a hospital, the DD Form 1380 will be used to prepare the inpatient treatment record (ITR). The DD Form 1380 will then become part of the ITR.

c. The original DD Form 1380 used to record outpatient treatment in peacetime operations or during training exercises will be forwarded to the custodian of the patient's HREC or OTR for inclusion in the record.

C-5. Field Medical Record Jacket

The Field Medical Record Jacket (DA Form 4006) may be used as an envelope for the DD Form 1380. To keep the jacket from being opened while the patient is in transit, pertinent personnel and medical data on the patient may be recorded on the outside. The movement of the patient may also be recorded. When the jacket has been so used, it becomes a part of the ITR.

Table C-1. Instructions for Completing DD Form 1380

BLOCK NUMBER	INSTRUCTIONS
1	ENTER PATIENT'S NAME, RANK, AND COMPLETE SOCIAL SECURITY NUMBER (SSN). FOR FOREIGN MILITARY PERSONNEL (INCLUDING PRISONERS OF WAR), ENTER MILITARY SERVICE NUMBER. ENTER MOS OR AOC FOR SPECIALTY CODE. ENTER RELIGION. CHECK APPROPRIATE BOX FOR GENDER (SEX).
2	ENTER PATIENT'S UNIT OF ASSIGNMENT AND THE COUNTRY OF WHOSE ARMED FORCES THE PATIENT IS A MEMBER. CHECK ARMED SERVICE OF THE PATIENT, THAT IS A/T—ARMY; AF/A—AIR FORCE; N/M—NAVY; AND MC/M—MARINE.
3	USE FIGURES TO SHOW LOCATION OF INJURY OR INJURIES. CHECK APPROPRIATE BOX(ES) TO DESCRIBE PATIENT INJURY OR INJURIES.
4	CHECK APPROPRIATE BOX.
5	WRITE IN THE PULSE RATE AND TIME THAT THE PULSE WAS MEASURED.
6	CHECK YES OR NO BOX. WRITE IN DATE AND TIME THAT TOURNIQUET WAS APPLIED.
7	CHECK YES OR NO BOX. WRITE IN DOSE ADMINISTERED. WRITE IN DATE AND TIME ADMINISTERED. **NOTE: SEE PARAGRAPH C-2 ABOVE.**
8	WRITE IN TYPE OF SOLUTION. WRITE IN TIME AND LOCATION GIVEN. IF ADDITIONAL SPACE IS NEEDED, USE BLOCK 9.
9	WRITE IN INFORMATION REQUESTED. IF ADDITIONAL SPACE IS NEEDED, USE BLOCK 14.
10	CHECK APPROPRIATE BOX. WRITE IN DATE AND TIME OF DISPOSITION.
11	SIGNATURE AND UNIT OF MEDICAL OFFICER COMPLETING FORM. COMBAT MEDICS INITIATING FORM PLACE INITIALS ON THE RIGHT SIDE OF BLOCK.
12	WRITE IN DATE AND TIME OF ARRIVAL. RECORD BLOOD PRESSURE, PULSE, AND RESPIRATION IN SPACE PROVIDED.
13	DOCUMENT APPROPRIATE COMMENTS BY DATE AND TIME OF OBSERVATION.
14	DOCUMENT PROVIDER'S ORDERS BY DATE AND TIME. RECORD DOSE OF TETANUS ADMINISTERED AND TIME ADMINISTERED. RECORD TYPE AND DOSE OF ANTIBIOTIC ADMINISTERED AND TIME ADMINISTERED.
15	WRITE IN SIGNATURE OF PROVIDER OR MEDICAL OFFICER.
16	CHECK APPROPRIATE BOX. ENTER DATE AND TIME.
17	THIS BLOCK IS COMPLETED BY THE UNIT MINISTRY TEAM AND SIGNED BY THE CHAPLAIN PROVIDING THE SERVICE. CHECK APPROPRIATE BOX OF SERVICE PROVIDED.

Table C-2. Officer and Enlisted Grade Structure

ARMY	MARINES	NAVY/ COAST GUARD	AIR FORCE	DATA CODES
GENERAL OF THE ARMY (GA)	--	FLEET ADMIRAL (FADM)	GENERAL OF THE AIR FORCE (GenAF)	G5
GENERAL (GEN)	GENERAL (GEN)	ADMIRAL (ADM)	GENERAL (GEN)	G4
LIEUTENANT GENERAL (LTG)	LIEUTENANT GENERAL (LtGen)	VICE ADMIRAL (VADM)	LIEUTENANT GENERAL (LtGen)	G3
MAJOR GENERAL (MG)	MAJOR GENERAL (MajGen)	REAR ADMIRAL (RADM)	MAJOR GENERAL (MajGen)	G2
BRIGADIER GENERAL (BG)	BRIGADIER GENERAL (BGen)	COMMODORE (COMO) (War time) REAR ADMIRAL lower half	BRIGADIER GENERAL (Brig Gen)	G1
COLONEL (COL)	COLONEL (Col)	CAPTAIN (CAPT)	COLONEL (Col)	O6
LIEUTENANT COLONEL (LTC)	LIEUTENANT COLONEL (LtCol)	COMMANDER (CDR)	LIEUTENANT COLONEL (LtCol)	O5
MAJOR (MAJ)	MAJOR (Maj)	LIEUTENANT COMMANDER (LCDR)	MAJOR (MAJ)	O4
CAPTAIN (CPT)	CAPTAIN (Capt)	LIEUTENANT (LT)	CAPTAIN (Capt)	O3
FIRST LIEUTENANT (1LT)	FIRST LIEUTENANT (1stLt)	LIEUTENANT, JUNIOR GRADE (LTJG)	FIRST LIEUTENANT (1Lt)	O2
SECOND LIEUTENANT (2LT)	SECOND LIEUTENANT (2ndLt)	ENSIGN (ENS)	SECOND LIEUTENANT (2Lt)	O1
CHIEF WARRANT OFFICER (CW5)	CHIEF WARRANT OFFICER (CWO5)			W5
CHIEF WARRANT OFFICER (CW4)	CHIEF WARRANT OFFICER (CWO4)	CHIEF WARRANT OFFICER (CWO-4)		W4
CHIEF WARRANT OFFICER (CW3)	CHIEF WARRANT OFFICER (CWO3)	CHIEF WARRANT OFFICER (CWO-3)		W3
CHIEF WARRANT OFFICER (CW2)	CHIEF WARRANT OFFICER (CWO2)	CHIEF WARRANT OFFICER (CWO-2)		W2
WARRANT OFFICER (WO1)	WARRANT OFFICER (WO)			W1

Table C-2. Officer and Enlisted Grade Structure (Continued)

ARMY	MARINES	NAVY/ COAST GUARD	AIR FORCE	DATA CODES
SERGEANT MAJOR OF THE ARMY (SMA)	SERGEANT MAJOR OF THE MARINE CORPS (SgtMajMC)	MASTER CHIEF PETTY OFFICER OF THE NAVY (MCPON)	CHIEF MASTER SERGEANT OF THE AIR FORCE (CMSAF)	E9
COMMAND SERGEANT MAJOR (CSM)	SERGEANT MAJOR (Sgt Maj)	FLEET/COMMAND MASTER CHIEF PETTY OFFICER (MCPO)	CHIEF MASTER SERGEANT (MSgt)	E9
SERGEANT MAJOR (SGM)	MASTER GUNNERY SERGEANT (MGySgt)	--	FIRST SERGEANT (E-9)	E9
FIRST SERGEANT (1SG)	FIRST SERGEANT (1stSgt)	SENIOR CHIEF PETTY OFFICER (SCPO)	SENIOR MASTER SERGEANT (SMSgt)	E8
MASTER SERGEANT (MSG)	MASTER SERGEANT (MSgt)	--	FIRST SERGEANT (E-8)	E8
PLATOON SERGEANT (PSG) OR SERGEANT FIRST CLASS (SFC)	GUNNERY SERGEANT (GySgt)	CHIEF PETTY OFFICER (CPO)	MASTER SERGEANT (MSgt)	E7
STAFF SERGEANT (SSG)	STAFF SERGEANT (SSgt)	PETTY OFFICER FIRST CLASS (PO1)	TECHNICAL SERGEANT (TSgt)	E6
SERGEANT (SGT)	SERGEANT (Sgt)	PETTY OFFICER SECOND CLASS (PO2)	STAFF SERGEANT (SSgt)	E5
CORPORAL (CPL)	CORPORAL (Cpl)	PETTY OFFICER THIRD CLASS (PO3)	SERGEANT (Sgt)	E4
SPECIALIST	--	--	--	E4
PRIVATE FIRST CLASS (PFC)	LANCE CORPORAL (LCpl)	SEAMAN (Seaman)	AIRMAN FIRST CLASS (ALC)	E3
PRIVATE (PVT)	PRIVATE FIRST CLASS (PFC)	SEAMAN APPRENTICE (SA)	AIRMAN (Amn)	E2
PRIVATE (PVT)	PRIVATE (Pvt)	SEAMAN RECRUIT (SR)	AIRMAN BASIC (AB)	E1

1. LAST NAME, FIRST NAME/NOM ET PRÉNOM: DOE, JOHN P
RANK/GRADE: SGT
[X] MALE/HOMME
[ ] FEMALE/FEMME
SSN/NUMÉRO MATRICULE: 123-45-6789
SPECIALTY CODE/GPM: 118
RELIGION/RELIGION: CATHOLIC
2. UNIT/UNITÉ:
FORCE/ÉLÉMENT: A/T [ ] AF/A [ ] N/M [ ] MC/M [ ]
NATIONALITY/NATIONALITÉ: USA
[X] BC/BC [ ] NBI/BNC [ ] DISEASE/MALADIE [ ] PSYCH/PSYCH
3. INJURY/BLESSURE

FRONT/DEVANT BACK/ARRIÉRE

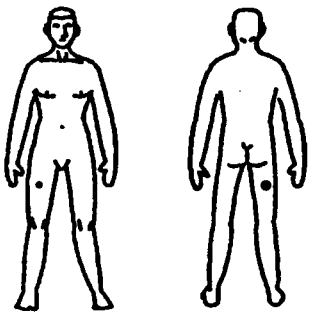

[ ] AIRWAY/TRACHÉE
[ ] HEAD/TÊTE
[X] WOUND/BLESSURE
[ ] NECK/BACK INJURY/ BLESSURE AU COU/AU DOS
[ ] BURN/BRÛLURE
[ ] AMPUTATION/AMPUTATION
[ ] STRESS/TENSION
[ ] OTHER (*SPECIFY*)/AUTRE (*SPÉCIFIER*)

4. LEVEL OF CONSCIOUSNESS/NIVEAU DE CONSCIENCE
[ ] ALERT/ALERTE
[X] VERBAL RESPONSE/RÉPONSE VERBALE
[ ] PAIN RESPONSE/RÉPONSE À LA DOULEUR
[ ] UNRESPONSIVE/SANS RÉPONSE
5. PULSE/POULS
TIME/HEURE
6. TOURNIQUET/GARROT [X] NO/NON [ ] YES/OUI
TIME/HEURE
7. MORPHINE/MORPHINE [X] NO/NON [ ] YES/OUI
DOSE/DOSE
TIME/HEURE
8. IV/IV: RINGERS
TIME/HEURE: 1925
9. TREATMENT/OBSERVATIONS/CURRENT MEDICATION/ALLERGIES/NBC (ANTIDOTE)
TRAITEMENT/OBSERVATIONS/PRESENTE MEDICATION/ALLERGIES/ANTIDOTES

PRESSURE BANDAGE

10. DISPOSITION/ DISPOSITION
[ ] RETURNED TO DUTY (RETOUR À L'UNITÉ
[X] EVACUATED/EVACUÉ
[ ] DECEASED/DÉCÉDÉ
TIME/HEURE: 2030
11. PROVIDER/UNIT/OFFICIER MÉDICALÉ/UNITÉ: CPB
DATE/DATE (*YYMMDD*): 971212

DD FORM 1380, DEC 91 — *This form replaces previous editions of DD Form 1380 and DD Form 1380 (TEST), which are obsolete.*

U.S. FIELD MEDICAL CARD
FICHE MÉDICALE DE L'AVANT ÉTATS-UNIS

Figure C-1. Information on DD Form 1380 completed by the combat medic.

12. REASSESSMENT/RÉASSESSMENT
GUNSHOT WOUND TO RIGHT THIGH

DATE/DATE (YYMMDD)	TIME OF ARRIVAL/HEURE D'ARRIVÉE
971212	2100

TIME/HEURE				
2110				
BP/PS 140/85				
PULSE/POULS 95				
RESP/RESP 90				

DATE/TIME
DATE/HEURE
971212
2115

13. CLINICAL COMMENTS/DIAGNOSIS
INFORMATION MÉDICALE/DIAGNOSTIQUES
FLESH WOUND NO BONE INVOLVEMENT
SMALL ENTRY, ENLARGED EXIT WOUND

14. ORDERS/ANTIBIOTICS (Specify)/TETANUS/IV FLUIDS
DIRECTIVES MÉDICALES/ANTIBIOTIQUES (Spécifier) TÉTANOS/IV FLUIDE
CONTINUE RINGERS
ADMINISTERED MORPHINE 5mg 2120
PRESSURE BANDAGE REPLACED

15. PROVIDER/OFFICER MÉDICALE
JAMES B. SMITH, CPT, SP
DATE/DATE (YYMMDD) 971212

16. DISPOSITION/DISPOSITION
- [ ] RETURNED TO DUTY/RETOUR À L'UNITÉ
- [X] EVACUATED/EVACUÉ
- [ ] DECEASED/DÉCÉDÉ

TIME/HEURE 2210

17. RELIGIOUS SERVICES
SERVICES RELIGIEUX
- [ ] BAPTISM/BAPTISÉ
- [ ] ANOINTING/ONCTION
- [ ] CONFESSION/CONFESSION
- [ ] PRAYER/PRIÉRE
- [ ] COMMUNION/COMMUNION
- [ ] OTHER/AUTRE

CHAPLAIN/CHAPELAIN

DD Form 1380, DEC 91 (Back)

Figure C-2. Reassessment completed by the battalion aid station and annotated on the DD Form 1380.

APPENDIX D

MEDICAL REENGINEERING INITIATIVE MEDICAL EVACUATION UNITS

D-1. General

The MRI reorganized medical units to alleviate deficiencies apparent in the MF2K units. In the medical evacuation arena, changes to the medical evacuation battalion and the medical company, air ambulance were minor; these units are not classified as MRI units. More significant structural changes in the medical company, ground ambulance were made.

D-2. Headquarters and Headquarters Detachment, Medical Evacuation Battalion

a. The mission of the medical evacuation battalion (Figure D-1) is to provide C2 and logistical support of assigned and attached air and ground ambulance medical evacuation within the TO. This unit is normally assigned to the medical brigade and provides—

- Command, control, and supervision of operations, training, and administration of combinations of medical companies (air and ground ambulance).

- Staff and technical supervision of aviation operations, safety, and AVUM-level maintenance within attached air ambulance companies.

- Coordination of medical evacuation operations and communications functions on a continuous two-shift basis.

- Unit-level CHS and aviation medicine support for units within the battalion.

- Battalion-level maintenance support for wheeled vehicles, to include vehicle recovery operations support to assigned or attached units.

- Combat health logistics support to attached units.

- One cook to augment the food service capabilities of the supporting unit.

b. The medical evacuation battalion is capable of performing unit-level maintenance on vehicles, generators, and communications equipment.

c. This unit is dependent upon the corps/ASCC for religious, finance, legal, personnel and administrative services, GRREG, bath and clothing exchange, COMSEC equipment maintenance, and military police support.

d. Additional resources were included in the headquarters to enhance the operations capability and maintenance functions.

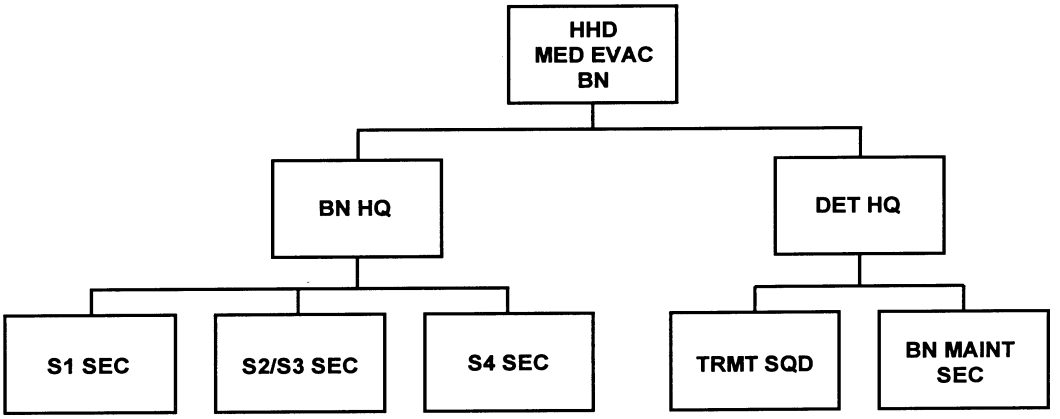

Figure D-1. Headquarters and headquarters detachment, medical evacuation battalion.

D-3. Medical Company, Air Ambulance

a. The mission of the medical company, air ambulance is to provide aeromedical evacuation and support within the TO. This unit is assigned to the medical brigade and further attached to a medical evacuation battalion. This unit provides—

- Fifteen helicopter ambulances to evacuate critically wounded or other patients consistent with evacuation priorities and operational considerations, from points as far forward as possible, to divisional MTFs and corps-level hospitals. Single patient lift capability for the UH-1 is 90 litter patients or 135 ambulatory patients, or some combination thereof; UH-60 is 60 litter patients or 105 ambulatory patients, or some combination thereof.

- Three forward support teams (three helicopters each) that can be individually or group deployed in support of unique or emergency operations worldwide.

- Air crash rescue support.

- Expeditious delivery of whole blood, biologicals, and medical supplies to meet critical requirements.

- Rapid movement of medical personnel and accompanying equipment/supplies to meet the requirements for mass casualty, reinforcement/reconstitution, or emergency situations.

- Movement of patients between hospitals, ASFs, hospital ships, and casualty receiving and treatment ships, and seaports and railheads in both the corps and EAC.

- Fuel handling and transport (to include hot refuel operations) for all organic aircraft that operate in four different geographic locations.

- Food service support to the HHD, medical evacuation battalion when collocated.

b. The basis of allocation is—

- One unit in DS of each division or equivalent force supported. Further, one unit is in general support in the corps per two divisions or fraction thereof; or .333 units per separate brigade or ACR.

- One unit per theater for the purpose of evacuating patients to and from hospital ships.

Other basis of allocation will be determined by CHS planners based on METT-TC or major theater war.

c. The medical company, air ambulance performs AVUM on all organic aircraft and unit maintenance on all equipment (less medical).

d. This unit is dependent upon—

- Appropriate elements of the corps or ASCC for CHS, religious, legal, finance, and personnel and administrative services.

- The HHD, medical evacuation battalion for unit-level (Echelon I) CHS and aviation medicine support.

- The supporting AVIM organization for aviation intermediate support.

e. For additional information on this unit, refer to FM 8-10-26.

D-4. Medical Company, Ground Ambulance

a. The mission of the medical company, ground ambulance (Figure D-2) is to provide ground evacuation of patients within the TO. It is assigned to the medical evacuation battalion or medical brigade. This unit provides—

- Single lift capability for the evacuation of 96 litter patients or 192 ambulatory patients.

- Evacuation of patients from division medical companies to CZ hospitals.

- Evacuation of patients from ASMCs to supporting hospitals.

- Reinforcement of division medical company evacuation assets, when required.

- Reinforcement of covering force and deep battle operations, when required.

- Movement of patients between hospitals and ASFs, seaports, or railroads in both the corps and EAC.

- Area evacuation support beyond the capability of the ASMB.
- Emergency movement of medical supplies.
- Food service and vehicle refueling support for the HHD, medical evacuation battalion.

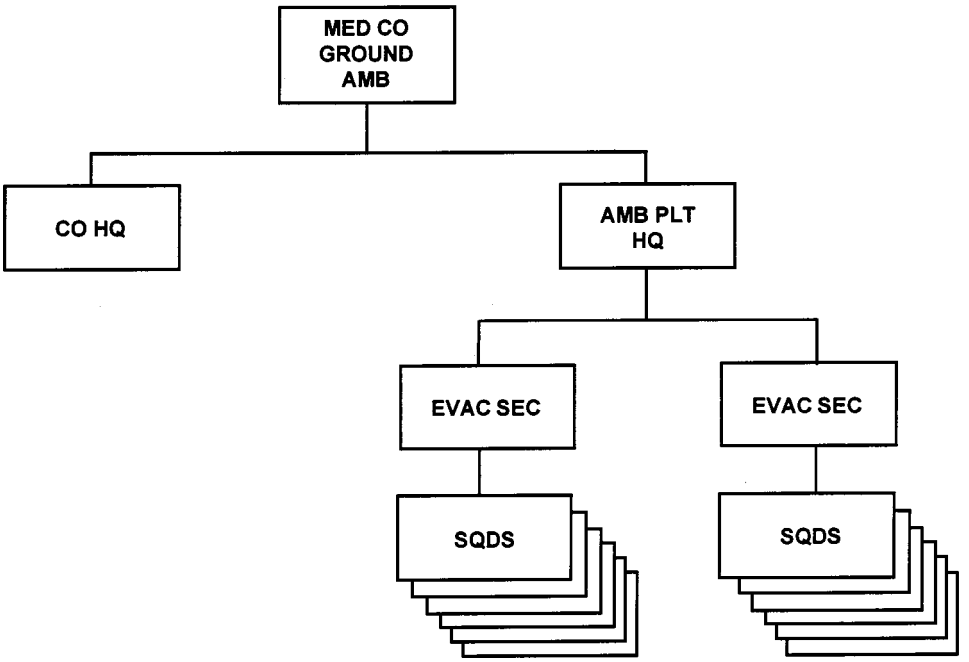

Figure D-2. Medical company, ground ambulance.

b. The medical company, ground ambulance performs unit maintenance on communications-electronics equipment and wheeled vehicles.

c. This unit is dependent upon—

- Appropriate elements of the corps/ASCC for CHS, religious, finance, legal, personnel and administrative services, laundry and bath, generator equipment maintenance, and military police support.
- The HHD, medical evacuation battalion for unit-level CHS and treatment teams to provide CHS.

d. The MRI process has resulted in an update to reflect current standards of grade, manpower requirements criteria, and basis of issue plans.

(1) The major changes include—

- The number of ambulances decreased from 40 to 24. This resulted in the following changes:
  - Platoon headquarters reduced from four to two.
  - Ambulance platoon headquarters reduced from four to two.
  - Ambulance sections reduced from four to two and redesignated as evacuation sections.
  - Ambulance squads reduced from 20 to 12.
  - Ambulance drivers (medical specialists) reduced from 90 to 48.
- Revision of the capabilities as discussed above.

(2) The redesign of this unit permits more responsive medical evacuation support through the reduction of the span of control for the C2 element; split-based capability with the addition of the executive officer; and a more flexible and modular design.

APPENDIX E

USE OF THE HIGH PERFORMANCE HOIST IN MEDICAL EVACUATION OPERATIONS

Section I. CREW RESPONSIBILITIES

E-1. General

a. The minimum number of crew members needed to execute a hoist rescue operation is four. This includes the PC, PI, crew chief (hoist operator), and flight-qualified medic. As crew coordination is the key to successful hoist operations, each crew member must thoroughly understand the duties of all persons involved in the effort. If the patient is disabled, the PC designates a crew member to descend on the hoist to assist the patient.

b. Throughout this chapter the term *patient* denotes a medical patient, casualty, or survivor.

E-2. Primary Crew Responsibilities

a. The PC has overall C2 of the operation. He supervises planning and preflight procedures as well as briefing the crew on all mission details. He coordinates crew activities and is responsible for their proficiency and performance. Although his primary duty is to fly the helicopter, the situation may require him to operate the hoist by using the cockpit controls.

NOTE

For simplicity, the paragraphs relating to flight techniques are written assuming the PC is the pilot at the controls. However, the PC often directs who flies the aircraft.

b. The PI has the responsibility throughout the operation to remain oriented with the horizon and to assist both the PC and the hoist operator, if needed. If an emergency situation arises he will be directed by the PC to employ the hoist cable cutter. He must be familiar with all crew member tasks and be able to perform them. If the hoist operator is directed to leave the helicopter to aid a patient, the PI may be required to operate the hoist.

c. The hoist operator inspects the hoist and all other mission-essential equipment prior to takeoff. His most crucial task is to guide the PC over the patient. The hoist operator is responsible for deploying smoke and flare devices. He operates the hoist and assists in lifting the patient into the helicopter.

d. The flight medic provides EMT to the patient. He may be required to leave the helicopter to assist the patient. The flight medic should also be proficient in operating the hoist.

Section II. INTERCREW COMMUNICATIONS

E-3. General

To successfully accomplish hoist rescue operations, all members of the rescue team must be able to communicate accurately and concisely. All crew members must be able to communicate the necessary information even if voice communications are impossible or impractical.

E-4. Intercrew Communications

The primary means of communicating throughout the hoist operations is voice communications over the helicopter interphone system (hot mike); however, the PC or PI may elect to remain on the command radio and depress the interphone switch. If the interphone fails, hand signals are used.

a. Operational terminology. During the operation, communications between the PC and hoist operator should be clear and concise. To avoid confusion, no more than one direction should be given at a time. The PC acknowledges each direction. The following terminology is recommended for use by the hoist operator and should be standardized in the unit TSOP.

(1) Area is in sight.

(2) Patient is in sight ___ feet ahead—correct right (or left, as applicable).

(3) On course, patient is straight ahead—on course.

(4) Back ___ feet

(5) Forward ___ feet.

(6) Up ___ feet.

(7) Down ___ feet.

(8) Left ___ feet.

(9) Right ___ feet.

NOTE

The commands listed in E-4*a*(2) and (4) through (9) refer to relative distance. The distance may, in fact, be greater or lesser than feet. The flight crew should rehearse hoist operations so that they are synchronized in their execution and confident that they understand all the commands given.

(10) Hold. (Used when in position and centered over patient.)

NOTE

The word *STOP* should never be used.

(11) Hoist begins initial descent.

(12) Hoist is halfway down.

(13) Hoist is on the ground (in the water, as applicable).

(14) Aircraft is clear of all obstacles.

(15) Patient is on the hoist, ready for pickup.

(16) Ground personnel are clear.

(17) Cable is tight/slack is out.

(18) Pilot, lift the load.

(19) Load is off the ground.

(20) Give load height in 1-foot increments until the load is stabilized and at 10 feet.

(21) Load is clear of barriers.

(22) Load is 20 feet below the aircraft.

(23) Give load height in 5-foot increments until the load is stabilized 5 feet below the aircraft.

(24) Load is even with the skid tubes or wheels.

(25) Load is secure in the aircraft.

(26) Rear is ready and secure.

b. Hand signals.

(1) Hand signals should be preplanned and practiced before the operation. It is important that the hand signals not impair the crew's ability to fly the aircraft. When using hand signals, the PC and hoist operator should be positioned on opposite sides of the helicopter, or the PI can relay these signals to the PC.

(2) The following are examples of hand signals used during hoist operations to direct the PC:

(*a*) Movement of the helicopter can be indicated by moving the open hand in the desired direction with the palm facing in that direction.

(*b*) Hold in present position is indicated by a clenched fist.

(*c*) Movement of the hoist is indicated by extending the thumb either up or down from a clenched fist.

(*d*) Fingers are used to indicate numbers of feet.

Section III. EMPLOYMENT

E-5. General

Hoist rescue operations must be conducted in a systematic manner to ensure that the operation is handled in the safest possible way. All crew members must be aware of what phase the operation is in at any given time.

E-6. Hoist Rescue Operational Phases

Once the patient has been located, hoist rescue operations can be divided into four distinct phases. These phases are—

a. Visual Preparation. Upon sighting the patient, smoke is dropped to mark his position and to determine wind direction. If radio communications with the patient have been established, position marking may not be necessary. If the wind direction is known, other marking devices, such as lights and panel markers, may be used.

b. Pattern Phase. A flight pattern is established during the second phase of the operation to bring the helicopter into position. The type of pattern to be flown is determined by the PC and is influenced by the PC's position in the cockpit. The left seat provides a greater field of vision. However, control of the hoist in the UH-1 cockpit is available in the right seat only. The unit TSOP designates the seat for the PC.

c. Recovery Phase. This is the most critical phase of the operation and requires the highest degree of crew coordination. Recovery techniques vary depending upon the environmental factors in the AO.

d. Departure Phase. In this phase, the patient is secured in the aircraft and the equipment is positioned for departure from the hoist site. The aircraft is then prepared for departure.

Section IV. ENVIRONMENTAL FACTORS

E-7. General

Hoist operations are conducted over both water and land and in varying degrees of illumination such as daylight, overcast conditions, and at night. The crew must train in all types of environmental conditions to ensure they are able to accomplish their stated mission.

NOTE

For safety reasons, crew members performing water recovery operations must be swimmers. They should also be helicopter emergency egress device (HEED) trained and equipped.

E-8. Water Recovery Operations

a. Visual Preparation.

(1) Upon the initial sighting of the patient, a marine locator marker is deployed in the immediate vicinity to mark the position and to determine the wind direction. The patient must be kept in sight until the initial smoke is dropped. The PC flies into the wind maneuvering over the patient so that the hoist operator can drop the smoke in the vicinity of the patient. If a marine locator marker is not available, fluorescein sea markers from the water survival kit are effective.

(2) Once the wind direction is determined, additional smoke may be employed to aid in spatial orientation. Smoke should be dropped at the lowest possible altitude and airspeed. The smoke must land in a spot close enough to the patient to provide adequate wind information, but should not obscure his position when approaching into the wind. The PC must keep the hoist operator continuously informed of their position in the pattern during the approach (on the downwind leg, on the base leg, and on the final approach). The hoist operator advises the PC when the smoke has been released.

b. Pattern Phase. Once the smoke is employed, the PC plans and establishes a flight pattern that places the helicopter in position for the recovery.

(1) If the PC is in the right seat, a right-hand pattern should be flown so that the PC can keep the patient in sight.

(2) The final approach should permit the helicopter to arrive at a hover far enough from the patient so that the—

- Waves and rotor wash are not a hazard to the patient.

- Rescue device can be lowered into the water at a safe distance from the patient.

(3) The PC advises the hoist operator of their position throughout the approach and advises when he has the patient in sight.

(4) The hoist operator acknowledges all calls and informs the PC when he has the patient in sight on the final approach.

(5) The PC and PI maintain the proper altitude and position once the final approach has been completed.

c. Recovery Phase.

(1) Once the hover has been established, the PI makes a *power-available* check to ensure that the helicopter has sufficient power to continue the operation. The check should be performed at the lowest altitude possible. When the PC is ready to continue with the recovery, he advises the hoist operator to lower the rescue device and directs the helicopter to the patient. The hoist operator then lowers the rescue device and gives directional instructions to the PC to move the helicopter on a straight course to the patient. Before he loses sight of the patient, the PC should transfer his hover reference to the smoke markers that have been placed upwind. He should not attempt to watch the pickup, as spatial disorientation may result. As the helicopter moves slowly toward the patient, the rescue device should be lowered. He ensures that the rescue device enters the water at least 20 to 30 feet before reaching the patient. This assures that the device does not strike and injure the patient. Flotation gear is provided for the patient at this time.

CAUTION

Static electricity built up on the hoist cable and the rescue device must be discharged by touching the device to the water before attempting the pickup.

(2) When the rescue device is in the water and easily accessible to the patient, the hoist operator directs the PC to hover to that position. When the patient is observed to be secured on the device and ready for hoisting, the—

- Hoist operator takes up any slack in the cable and notifies the PC that the pickup is ready to proceed.

- Copilot makes a final power check to ensure that sufficient power is available for recovery.

- Pilot-in-command applies sufficient power to lift the patient clear of the water (approximately 10 feet) or the PC may also direct the hoist operator to lift the patient with the hoist.

- Hoist operator begins hoisting until the patient is in the helicopter cabin.

(3) During the pickup, the PC devotes his full attention to maintaining a steady hover using all available reference points and the hoist operator's instructions. The PI monitors the instruments and remains oriented with the horizon throughout the operation to assist the PC. The hoist operator's instructions to the PC must be clear and concise (refer to paragraph E-4).

(4) The hoist operator advises the PC when the patient is safely inside the helicopter and secured in the cabin. The PC then transitions from a hover to forward flight.

CAUTION

The lateral center of gravity (CG) limits may be exceeded if all crew members and passengers are positioned on the same side of the helicopter.

E-9. Land Operations

a. Visual Preparation. Determining wind velocity and approximate distance is important to successful hoist operations. Although smoke may be used as a means for determining the approximate wind velocity and direction, observing vegetation in the area may be easily employed as an alternate means. If smoke is used, it should be deployed in an area that is open enough to be seen from anywhere in the hoist pattern. Care should be taken to select a nonflammable target area.

b. Pattern Phase.

(1) As in water operations, the pattern flown should allow the PC to maintain visual contact with the patient. Terrain factors and conditions encountered at the rescue site must be evaluated to determine the best approach to be used. The PC must keep the hoist operator informed at all times as to the type of pattern to be flown and the position of the helicopter in the pattern.

(2) The PC devotes his full attention to maintaining a steady hover by using all available references and the hoist operator's instructions. The PI monitors the engine instruments and remains oriented with the horizon. The presence of trees, wires, or other obstacles requires extreme caution in approaching the patient. Since all crew members must aid the PC in rotor-tip clearance, all doors and ramps are open for maximum visibility. The hoist operator must give clear and concise instructions to the PC. He must also supply continual commentary on the progress of the pickup throughout the pattern phase.

CAUTION

Static electricity built up on the hoist cable and rescue device must be discharged by touching the device to the ground before attempting the pickup.

c. Recovery Phase. Prior to hoisting the patient, the hoist operator takes up any slack in the cable and notifies the PC that the patient is ready for pickup. The PC then makes a final determination that sufficient power is available to safely accomplish the recovery. The PC applies sufficient power to lift the patient clear of the ground (approximately 10 feet) or if the tactical situation requires, the hoist operator raises the patient while the helicopter remains in a stationary hover. Both techniques have proven acceptable; however, the aircraft lift is preferred. The PC decides which technique to apply depending on the given situation. The first procedure provides the PC better control of the aircraft as the patient is lifted off the ground which may be needed in confined areas. In tactical situations, however, the second method may be used to avoid unmasking the aircraft. The hoist operator advises the PC when the patient is safely inside the helicopter and secured in the cabin. The PC then transitions from a hover to forward flight.

E-10. Night Recovery Operations

Flying, especially hovering, at night is difficult because visual ground references are not easily distinguishable. When hovering over water or dense vegetation, ground contrast and reference points are virtually nonexistent. Without visual clues, the PC's ability to judge movement is severely impaired. Constant head movement and scanning are essential throughout the maneuver to maintain altitude and position. Because of this increased workload, it is recommended that the crew chief (hoist operator) operate the hoist rather than the PC.

a. Illumination.

(1) Chemical lights may be attached to rescue equipment to provide illumination. The lights aid the hoist operator, as well as the personnel on the surface, to determine the position of the equipment during the operation.

NOTE

To activate the chemical light, remove it from the foil package and bend the light stick until a pop is heard. Shake the chemical light stick vigorously to facilitate the chemical reaction.

(2) Due to spatial disorientation at night while flying or hovering over water, continuous flare illumination should be used whenever possible. Flares improve depth perception and reference to the water. Multiple smoke or marking devices deployed on the water during water recoveries assist in determining wind direction and provide a visual reference for hovering. Caution must be used to prevent smoke from restricting visibility in the immediate recovery area.

(3) As in night water recoveries, flare illumination provides the best possible conditions for conducting land pickups at night. Flare illumination, however, is not absolutely necessary. Helicopter lights normally provide adequate lighting to safely accomplish the recovery.

b. Night Vision Goggles.

(1) In a tactical environment, the amount of illumination which can be used during the recovery operation should be considered. It may be necessary to use NVG in order to maintain adequate concealment.

(2) Infrared (IR) chemical lights, designed for use with the NVG, may be attached to rescue equipment to provide the hoist operator with visual clues during hoisting procedures. (A 30-minute high-intensity light stick and a 12-hour low intensity light stick are also available.)

Section V. INERT PATIENT RECOVERIES

E-11. General

If it is determined that the patient is unconscious or unable to board the rescue device, the PC directs one of the crew members to prepare to exit the helicopter and another to act as the hoist operator. If the hoist operator is directed to leave the helicopter, the PI moves to operate the hoist. If a medic is available, he may exit the helicopter while the other crew members maintain their positions.

E-12. Procedural Guidance

a. The crew member performing the duties of hoist operator dons the safety harness over the hoist operator vest. He ensures that the crew member preparing to leave the helicopter is secured in the rescue device or hoisting vest. Flotation gear must be worn during all water recoveries, and if necessary, be provided to the patient. The PC is notified when the preparations are completed.

CAUTION

Static electricity built up on the hoist cable and rescue device must be discharged by touching the device to the ground before attempting the pickup.

b. Once the crew member is ready to exit the helicopter, he is lowered to the surface where he leaves the rescue device and secures the patient for hoisting. The hoist operator then notifies the PC when ready to begin hoisting. The PC determines if adequate power is available to accomplish the recovery.

c. The PC applies sufficient power to lift the patient off the ground (approximately 10 feet) or the hoist operator raises the patient while the helicopter remains at a stationary hover. The hoist operator then hoists the patient, pulls him into the cabin, and removes the patient from the device. The crew member is then retrieved from the surface. The hoist operator must keep the PC informed of the progress of

the recovery. When all personnel are safely inside the cabin, the PC is notified. The PC then transitions from a hover to forward flight. If the PI has served as hoist operator, he returns to his position in the cockpit.

Section VI. METEOROLOGICAL AND TERRAIN FACTORS

E-13. General

Hoist rescue operations are conducted over various types of terrain and in a number of weather conditions. The aircraft crew must be familiar with the unique requirements within their mission area and must train in these conditions to ensure the safety of the hoist operation.

E-14. Performance Planning

a. Prior to hoist operations, the PC must consult the appropriate operator's manual, specifically the performance charts. These charts correlate the effects of altitude, temperature, and gross weight on aircraft performance. Data is available for virtually all environmental conditions.

b. The performance planning card (PPC) enables the PC to determine if the aircraft can perform the mission under the current meteorological conditions. It is critical that the PC assess environmental conditions which can be expected at the rescue site, especially if they differ from those at the departure point. During high altitude missions, it is recommended that the PI continually update the PPC to compensate for gross weight changes and CG shifts.

(1) Under adverse conditions, the amount of weight that can be carried may be limited and the aircraft may be unable to sustain the high hover necessary for hoist operations. Wind direction and velocity must also be considered. For maximum control of the aircraft, the PC should avoid excessive tailwinds and right crosswinds. (Refer to the aircraft operator's manual for wind limitations.)

(2) The PC must manage fuel consumption to ensure sufficient fuel is available to complete the mission. Aircraft can be equipped to carry auxiliary fuel tanks to extend the range. However, these tanks reduce the cabin area and the added weight will limit the size of the load. The auxiliary tanks also effect the aircraft's CG.

E-15. Mountain Operations

The rugged terrain and dense forest characteristics of mountain environments often necessitate the use of hoists to extract personnel. Variable weather, winds, icing, and altitude adversely affect aircraft performance. These factors require precise aircraft control and detailed flight planning to prevent interruptions and delays.

a. Altitude.

(1) Density altitude is the most important meteorological factor affecting aircraft performance over mountainous terrain. Density altitude is dependent upon temperature, relative humidity, and pressure altitude. It provides the basis for determining lift capability. An increase in any of the three basic elements increases density altitude and decreases lift capability. As density altitude increases, increased torque or power is required.

(2) In the mountains, density altitude can vary significantly depending upon the time of day. Furthermore, the density altitude at the point of departure may be quite different from that at the pickup site. For example, density altitude normally peaks in the late afternoon and reaches its low point at dawn. The power available/power required margin must be large enough to absorb transient power requirements caused by turbulence, wind shifts, and patient weight. In a high density altitude environment, power checks are critical. *Maintaining a minimum of 10 percent above required power is recommended.*

b. Wind. Wind is the principal weather hazard experienced in the mountains. Even moderate winds (11 to 20 knots) can produce significant turbulence as they pass over mountain ridges. Predicting wind conditions can be difficult due to the multitude of terrain variations. Each type has an effect on the flow of air. On the windward side of mountains, the direction of airflow is normally steady even though its strength may vary. On the leeward side of crests, wind is turbulent with strong vertical currents. The effects of turbulence may be alleviated by flying above terrain features and avoiding the lee side of all peaks and ridges. Ridges and saddles should be approached at the highest altitude possible and crossed at a 45 degree angle. Training and experience flying in these conditions minimize the hazards produced by wind and turbulence.

c. Icing. Icing can occur on aircraft in weather conditions such as low clouds and fog. In mountainous terrain, icing occurs when moist air is lifted over high peaks. Ice producing areas are usually on the windward side of peaks to about 4,000 feet above the peak, and possibly higher when the air is unstable. Army helicopters are not capable of flight in severe icing conditions. As ice forms on rotor blades, it results in a significant decrease in lift and autorotational capabilities. Asymmetrical shedding can occur which causes a severe rotor blade imbalance.

d. Additional Information. For additional information on medical evacuation operations in mountainous terrain, refer to paragraphs 5-2 and 9-12 through 9-13.

E-16. Jungle Operations

Jungle terrain is often rugged and swampy with dense towering trees. Some jungles are composed of several canopies with trees more than 100-feet tall. There are few suitable LZs and thick jungle foliage complicates communications between ground and air resources.

a. Density Altitude. Jungle weather is generally hot, humid, and very unstable. In this environment, density altitude becomes an overriding consideration. As density altitude increases, engine efficiency decreases and the power required can become critical under high gross weight conditions.

b. Signals. Signals are difficult to see or hear from under dense tropical growth. In order to locate personnel on the ground, it may be necessary to use emergency signaling devices. A wide streambed is a good place to signal from, especially where there are sandbars. Other open areas may also be used; however, caution must be exercised due to the increased vulnerability to sniper and small arms fire.

c. Additional information. For additional information on medical evacuation operations in jungle environments, refer to paragraph 5-3.

E-17. Extreme Cold Weather Operations

Cold weather flying conditions may be encountered in many parts of the world and the severity varies with latitude and season. In this harsh environment, rapidly changing weather poses the greatest hazard to the flight crew. Terrain in the arctic and antarctic regions ranges from mountain peaks and glaciers, to flat plains. Although open areas are available, the surface may not be desirable for landing. It may be necessary to use the high performance hoist to extract the patient.

a. Environmental Considerations.

- Navigation in arctic regions may be hampered by the rapidly shifting landscape, snow-covered landmarks, and the lack of NAVAIDS. In addition, magnetic compasses become unreliable in the northern- and southernmost latitudes. Under these conditions, a combination of radio navigation, dead reckoning, and pilotage may have to be used to locate the patient.

- Radio communications are generally good, but may be temporarily disrupted by electrical disturbances (auroras). Some frequencies may be blocked for weeks.

- Static electricity creates a serious problem in cold weather. It can be generated by the movement of an aircraft through the air, by brushing snow or ice from the aircraft, or by dragging the steel cables over the ground. During hoist operations, pilots should key the mike immediately before load pickup. However, the charge will buildup again rapidly.

CAUTION

Before touching rescue equipment, ground personnel must either allow the equipment to hit the ground or use a grounding device to avoid an electrical shock.

b. Ambient Light Conditions.

- Summer in the polar regions produces almost continuous daylight. Conversely, during winter there are only 3 to 4 hours of daylight. During night operations, a solid snow cover reflects available light, making it much brighter than without snow. It may still be necessary to use aircraft lighting, NVG, or emergency lighting in order to complete a hoist mission.

- Lighting conditions in mountainous terrain can create hazards. Flight through mountain passes during overcast conditions, combined with a solid snow cover, can be difficult. Visual references are easily lost and can result in vertigo. The PC should constantly check visual references with the aircraft altitude instruments.

c. Temperature. In polar regions, summer temperatures above 65° F are common except on glaciers and frozen seas. Winter temperatures sometimes drop to -70° F. Similar temperature extremes are experienced in subpolar regions.

d. Structural Icing. Aircraft performance is highly dependent upon temperature. Generally it improves as the temperature drops; that is, until icing becomes a factor. The most hazardous condition associated with the cold is aircraft structural icing. Army Regulation 95-1 prohibits Army aircraft from flying into known or forecasted severe icing conditions. Icing is most common when the temperature is between 32° F (0° Celsius [C]) and -4° F (-20° C) and when visible moisture such as clouds, drizzle, rain, or wet snow are present. Icing is rarely experienced in those areas which maintain temperatures of below -20° C.

e. Safety Considerations.

- Fly at altitudes below the freezing level or clear of any visible moisture. Remain in visual meteorological conditions and stay clear of clouds.

- Rotor-blade icing begins near the blade root. Ice buildup can cause loss of lift, resulting in an increase in power to maintain lift, and ultimately, an increase in engine temperature.

- Ice on the wire windscreen prevention device or wipers of the aircraft is the first sign of icing. The windows in the aircraft, even in the worst icing conditions, normally will not ice over.

- Asymmetrical ice shedding occurs when one rotor blade sheds ice, leaving the rotor out of balance. This condition of disequilibrium can lead to severe vibration. Ice shedding can also cause foreign object damage from ice ingested into the engine. When icing is encountered, descend to an altitude clear of clouds. Autorotational capability can be lost in a matter of minutes if ice is allowed to form on the rotor blades.

CAUTION

Shedding ice can be a hazard to ground personnel during start-up, hover, and shutdown.

f. Additional information. For additional information on medical evacuation operations in extreme cold conditions, refer to paragraph 5-5.

Section VII. SAFETY AND EMERGENCY PROCEDURES FOR HOIST MISSIONS

E-18. General

a. The information contained in this section is intended to supplement unit TSOPs and operator manuals. The primary importance of this section is to ensure that rescue equipment can be safely used for the tasks for which it was developed.

b. Safety officers are responsible for—

- Ensuring that safety and rescue equipment is periodically tested.
- Determining the serviceability of the equipment in accordance with applicable technical manuals.

c. All unit-level maintenance will be completed including required testing, inspection, and maintenance.

E-19. Safety Factors

Only equipment tested and approved for use in military aircraft will be used during hoist rescue operations.

a. *Hoist Cable*.

- The hoist operator must ensure that the cable does not become tangled in objects on the ground or in the water. The entire length of the cable should be kept in view at all times. If the cable does become tangled, an attempt should be made to free it by letting out more slack and manipulating it.
- Extreme care should be used when applying tension to the cable.

WARNING

If the cable should break, the whiplash action could cause injury to personnel or damage the helicopter.

b. *Pendulum Action*. Extreme care should be taken when hoisting the patient. If the pendulum action and rotation of the patient are not stopped immediately, the movement may become uncontrollable. Pendulum action may be dampened by moving the cable in a 1- or 2-foot circle in the opposite direction of the patient's movement.

WARNING

If the pendulum action is not stopped, do not continue to raise the patient. Continuing to raise the patient while experiencing pendulum action will only worsen the effect.

c. Protective Gloves. These gloves should be worn by the hoist operator over the Nomex flight gloves. The gloves should be made of heavy-duty leather and should prevent injury to the operator when manipulating the cable.

d. Vest, Hoist Operator, and Lifeline. The hoist operator vest, connected to the aircraft with a lifeline, is used both by the hoist operator and the medic during rescue operations. The vest and lifeline must be inspected regularly to ensure serviceability. While wearing the vest, avoid contact with moisture, hydraulic fluid, oil, grease, fuel, or acidic material.

WARNING

Always wear the safety harness on top of the hoist operator vest. This allows the crew member to quickly release the safety harness and exit the aircraft during an emergency egress.

The hoist operator vest (Figure E-1) consists of a Rachel knit vest with straps which crisscross the shoulders, waist, and hips. A D-ring, located at the center back of the vest, attaches the lifeline to the vest.

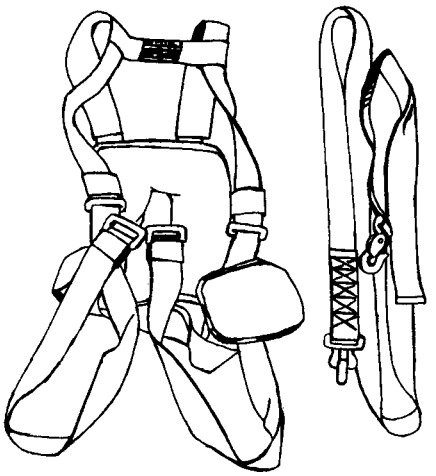

Figure E-1. Vest, hoist operator, and lifeline.

e. Tag Line and Weight Bag.

- The use of a tag line is mandatory when hoisting patients in a horizontal or vertical position under noncombat conditions. If used properly, the tag line keeps the litter from spinning or swinging and provides positive control over the litter during hoisting operations. The tag line should be at least 250 feet in length and made of 3/8-inch diameter kernmantle style nylon rope with a polypropylene core or nylon sheath. (Both ends will have a snap link attached with one attached to a weak link and the other to a weight or weight bag. The weak link is then attached with a second snap link to the litter's V-strap). (For proper connection of the tag line, refer to Figure E-2.) It is important that the tag line be equipped with a weight at the loose end. This weight prevents the tag line from being blown back up into the helicopter rotor system and provides a weight for lowering the rope back to the ground if necessary. A locally fabricated weight bag may be used to store the rope when not in use. The weight of a separate weight or weight and bag together should be at least 5 pounds. The weight bag may be manufactured of canvas or nylon and should have a weight securely fastened into the bottom of the bag. The use of tag lines under combat conditions is dependent upon the tactical situation.

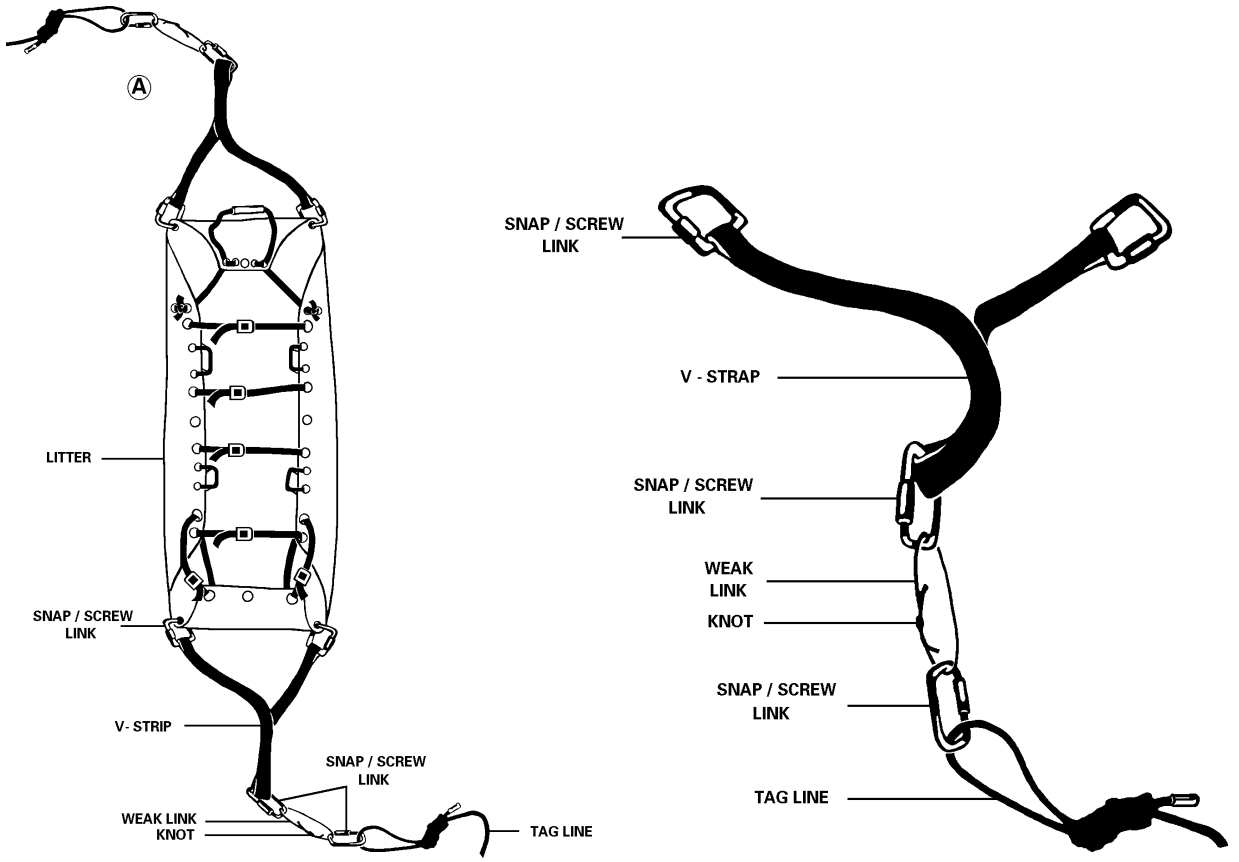

Figure E-2. Connection of the weak link to SKED litter and the tag line.
*(**A**—Method using V-strap.)*

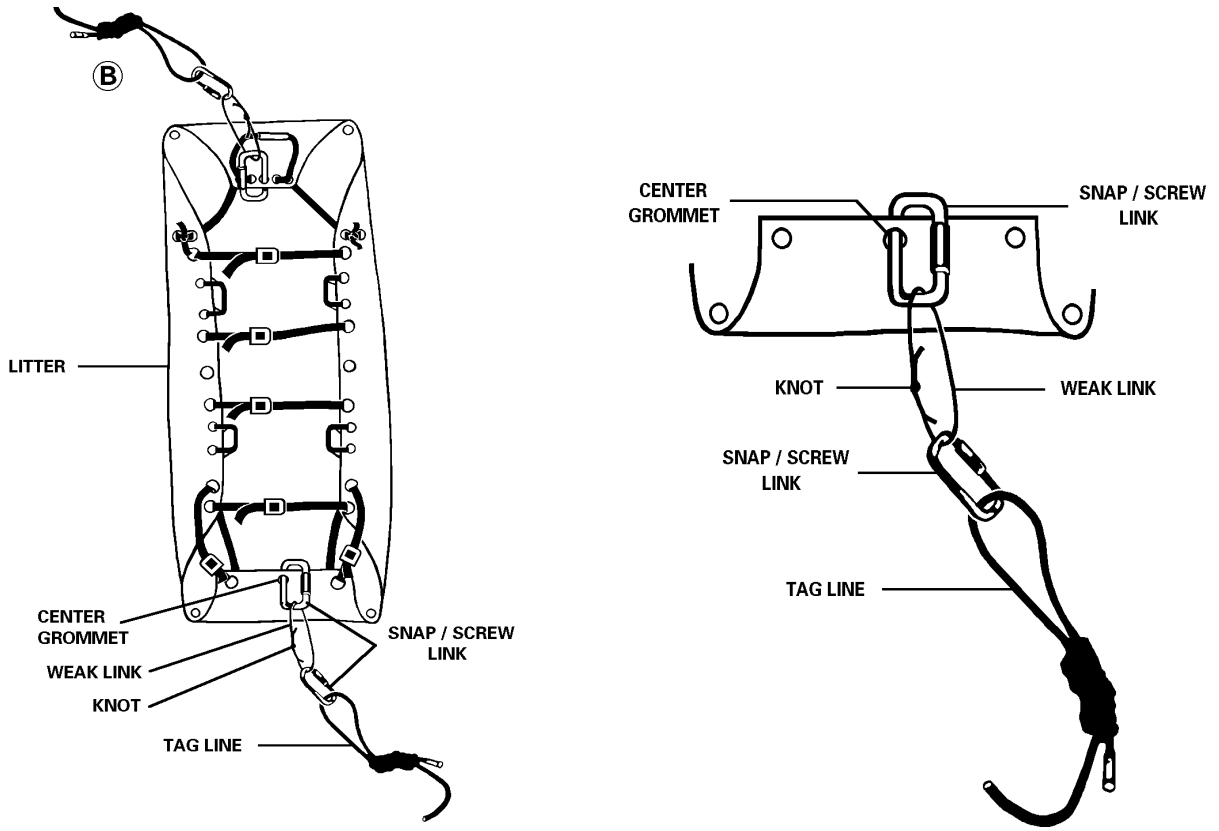

*Figure E-2. Connection of the weak line to SKED litter and tag line (continued). (**B**—Alternate method of using center grommet.)*

WARNING

1. The tag line should never be secured to an object on the ground or in the water while a hoist mission is in progress. The soldier holding the tag line should wear leather gloves to prevent injury to his hands. Injury can result from friction while handling the rope.

2. Do not allow a spin to start when using any flat surface litter system.

- The weak link is a device used to quickly detach the tag line from the litter being hoisted. If the tag line becomes entangled with an object, it will break away at the weak link when enough pull is asserted by ground personnel or by the helicopter.

- To use the weak link, attach the tag line with a snap link or screw link to one end of the weak link an inch or more away from the weak link knot. Attach the other end of the weak link one inch away from the knot to another snap link or skew link attached to the V-strap which is attached to the litter (Figure E-2**A**). An alternate method is to connect the weak link to a snap link or screw link which is attached to the center grommet of the SKED litter (Figure E-2**B**).

WARNING

A new weak link must be used for each live hoist mission.

NOTE

During hoist training, multiple unmanned lifts may be made using the same weak link. The used weak link should be disposed of properly.

- Proper placement of personnel during hoisting operation with any flat surface litter system is essential to prevention of litter spin. Refer to Figure E-3 for proper placement of tag line personnel.

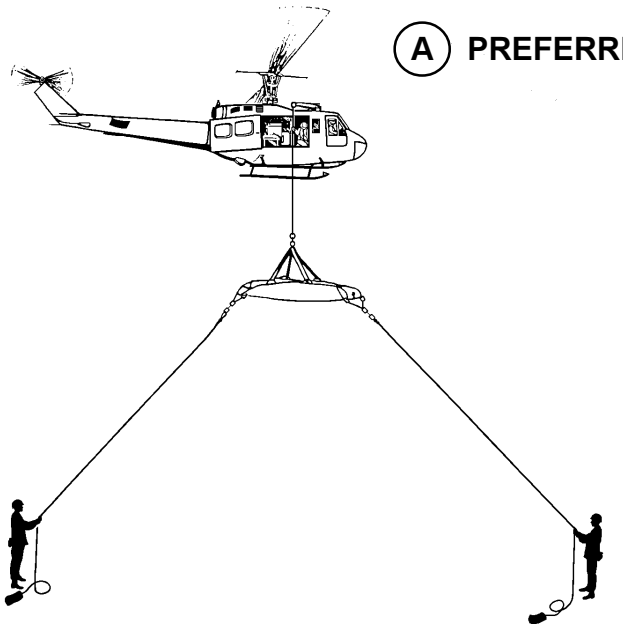

(A) PREFERRED PLACEMENT

USE OF TWO TAG LINES IS THE SAFEST WAY TO PREVENT A LITTER FROM SPINNING. TWO TAG LINES SHOULD ALWAYS BE USED IN TRAINING AND NONHOSTILE SITUATIONS FOR BETTER CONTROL OF THE LITTER. THIS POSITIONING AFFORDS MAXIMUM VISIBILITY FOR THE PILOT AND BOTH AIR AND GROUND CREWS.

NOTE: THE POSITIONING OF THE GROUND CREW AS SHOWN IS AN IMPORTANT FACTOR IN MAINTAINING CONTROL OF THE LITTER. THIS POSITIONING PROVIDES THE PILOT AND AIRCREW MAXIMUM VISIBILITY AND THE ANGLE OF THE TAG LINE AFFORDS MAXIMUM CONTROL OF THE LITTER.

Figure E-3. Placement of personnel for hoisting flat surface litter systems.

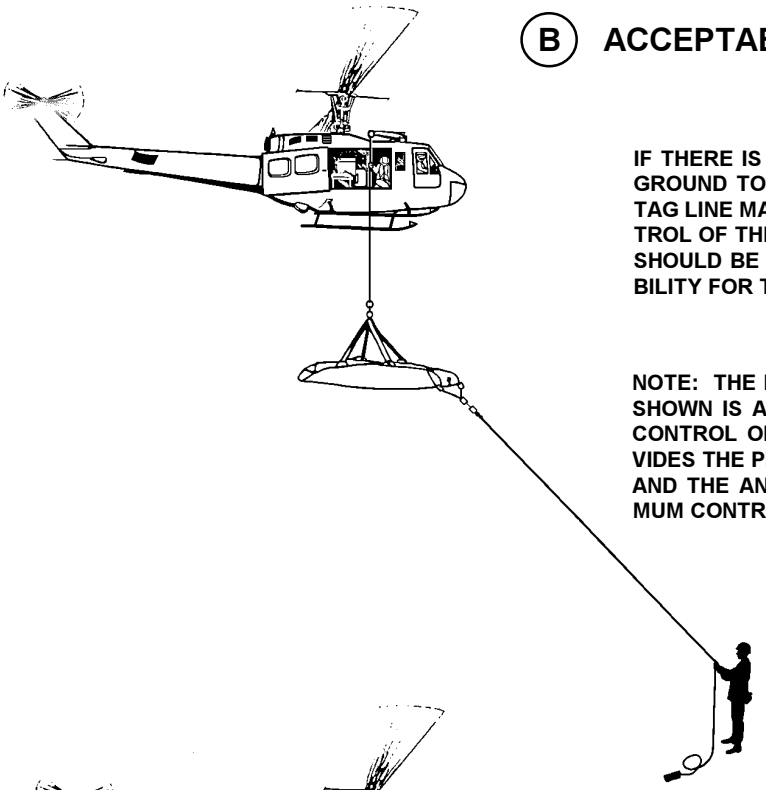

(B) ACCEPTABLE PLACEMENT

IF THERE IS ONLY ONE SOLDIER AVAILABLE ON THE GROUND TO ASSIST IN THE HOIST OPERATION, ONE TAG LINE MAY BE USED. TO OBTAIN ADEQUATE CONTROL OF THE LITTER, THE SOLDIER ON THE GROUND SHOULD BE POSITIONED TO AFFORD MAXIMUM VISIBILITY FOR THE PILOT AND AIRCREW.

NOTE: THE POSITIONING OF THE GROUND CREW AS SHOWN IS AN IMPORTANT FACTOR IN MAINTAINING CONTROL OF THE LITTER. THIS POSITIONING PROVIDES THE PILOT AND AIRCREW MAXIMUM VISIBILITY AND THE ANGLE OF THE TAG LINE AFFORDS MAXIMUM CONTROL OF THE LITTER.

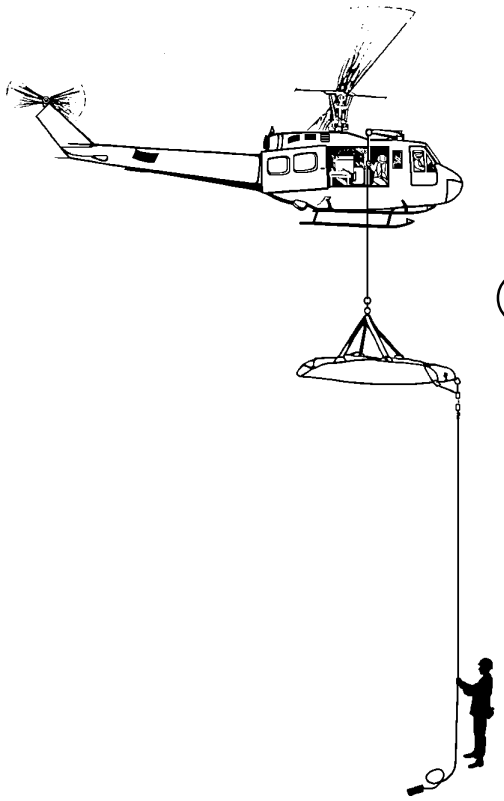

(C) LEAST DESIRABLE PLACEMENT

WHEN THE TAG LINE MUST BE HANDLED AT THE LEAST DESIRABLE ANGLE DUE TO TERRAIN, VEGETATION, OR OTHER OBSTACLES, THERE IS AN INCREASED RISK OF SPIN AND/OR WEAK LINK SEPARATION.

Figure E-3. Placement of personnel for hoisting flat surface litter systems (continued).

E-20. Emergency Procedures

If a partial loss of power occurs while hoisting and the altitude cannot be maintained, the patient should be immediately lowered to the surface to lighten the helicopter. If the situation deteriorates to the point where further action is required to prevent settling to the surface, the following action must be taken:

a. If hoisting overland, the patient should first be lowered to the ground and freed from the hoist. It may be necessary to cut the cables as soon as the survivor is safely on the ground. Initiate the emergency procedures described in the applicable operator's manual. Should inadvertent landing occur, the PC attempts to maneuver away from ground personnel. The preflight briefing should cover the direction that ground personnel and crew members move in the event of such an emergency. All nonessential personnel on the ground should remain a safe distance from the operation.

b. If hoisting over water, the patient should be lowered into the water and the cable cut to avoid dragging him in the water as described above. Emergency actions are initiated according to the applicable technical manual. Should an inadvertent landing occur, the aircraft should be maneuvered clear of the patient in the water, if at all possible.

c. In the event of a sudden and complete loss of power, the PC performs an emergency autorotation maneuvering away from the patient, if possible.

d. A recovery may be continued if the hoist mechanism fails to raise or lower from the cable extended position. The patient should be advised of the problem by hand and arm signals and instructed to remain firmly attached to the recovery device. Before transitioning to forward flight, the helicopter should climb to an altitude that affords the patient clearance from all obstacles. With the patient suspended from the helicopter, the PC proceeds at a slow speed to a safe landing area.

WARNING

As pendulum action and rotation may become uncontrollable if airspeed is too great, care must be used when attempting forward flight with the hoist cable extended and a patient attached.

e. During landings, with the patient still suspended, care is exercised to prevent dragging the patient and tangling the cable in the tail rotor. The hoist operator or PC must maintain light tension on the cable during landing. After the patient has been gently lowered to the ground, the emergency cable cutter may be used to free the cable from the helicopter to permit landing. The helicopter may be hovered to the side of the patient and landed with the cable attached. After landing, the cable is detached from the patient and stored in the helicopter.

E-21. Tactical Considerations

a. The focus of a hoist operation must change drastically in a combat rescue mission as opposed to a peacetime recovery. In a peacetime recovery, emphasis is on slow, decisive movements. The flight crew takes as much time as is necessary to effect the hoist operation giving priority to the safety of all concerned and patient comfort. Under combat conditions, the speed of the operation must be the primary focus to reduce exposure time. The following should be considered:

- Do not overfly pickup site.
- Look for the best hover location that offers cover and concealment.
- Prepare the aircraft for hoist operations prior to reaching the pickup site.
- Do not put aircrew members on the ground unless absolutely necessary for patient survival.
- Do not loiter near or circle the pickup site while awaiting patient preparation.
- Keep all aircraft active emitters turned off while on station, if possible.
- Use the forest penetrator or hoisting vest to hoist patients whenever conditions permit.
- Keep time on station to a minimum.
- Use all available aircraft survivability equipment (ASE).

b. The success of a combat hoist operation is dependent on—

- Undetected entry into the pickup area.
- Rapid completion of the hoist operation.
- Protected departure from the rescue site.

c. Combat hoist rescue operations are high-risk missions. Actions which support the safety and principles of hoist operations will reduce the risk and enhance the success of these missions.

Section VIII. FOREST PENETRATOR

E-22. General

The forest penetrator is a folding rescue seat designed for both land and water rescue operations. The forest penetrator is designed to penetrate thick foliage when lowered to the ground. This piece of equipment can accommodate up to three patients in a single lift. The flotation collar, when fastened around the forest penetrator, allows flotation of the complete assembly during water rescue operations.

E-23. Configuration of the Forest Penetrator

a. The forest penetrator is a compact device weighing about 21 1/2 pounds. The forest penetrator is 34-inches long and 8 inches in diameter when extended. Each seat is 4 3/4-inches wide and 11 1/2-inches long. The seats on the forest penetrator are spring-loaded in the retracted position (flush against the shaft of the penetrator). A spring-loaded retaining latch is provided under each seat to secure the seat in the extended position. To release the seat, push down on the seat and pull down on the latch. The seat will snap back into the retracted position.

b. Three webbed safety straps are provided to secure patients. Each strap extends 4 feet 9 1/4 inches, with an adjustable quick ejection snap hook attached to the upper section of the penetrator. The straps terminate with a yellow fabric, marked *TIGHTENED*. Yellow webbing tabs (with hook tape) marked *PULL OUT* are sewn to the safety straps for attachment to the fabric cover storage openings. The yellow fabric cover has a 17-inch slide fastener and three storage openings (with pile tape) for securing safety straps.

c. The flotation collar is made of bright orange foam rubber for high visibility and weighs 2.6 pounds. It is 20 1/4-inches long, with 7 3/4 inches in diameter at the top and a 4-inch diameter at the bottom. The flotation collar is 9 inches in diameter when installed on the forest penetrator and the seats are in the stowed position. In this configuration, the penetrator will float with its top approximately 6 inches above the water.

E-24. Application

When an LZ is unavailable, the forest penetrator can be attached to the rescue hoist to lift patients not requiring a hoisting litter. As many as three patients can be lifted at one time when conditions permit. The PC decides the number of patients to be lifted. The forest penetrator can be used with a hoist on the UH-1H/V, UH-60, or the CH-47.

CAUTION

Patients with spinal, pelvic, or neck injuries, or who are unconscious will not be hoisted on the forest penetrator.

E-25. Employment of the Forest Penetrator

a. The hoist operator connects the forest penetrator to the hoist hook. He coordinates with the PC and proceeds to lower the assembly to ground personnel.

b. Before handling the device, ground personnel allow the forest penetrator to touch the ground to discharge any static electricity.

c. The necessary number of wing seats is extended.

d. Safety straps are removed from their protective cover. The straps are placed under the patient's arms, around his back, and fastened to the hook of the penetrator.

e. Once the hoist operator has been signaled that the patient is secure, the PC is notified and the patient is lifted into the helicopter.

f. Once the hoist has reached the fully raised position, the crew member, placing an arm around the patient and the forest penetrator, rotates the patient so he is facing away from the aircraft.

g. The crew member simultaneously pulls the patient into the aircraft and lowers him onto the deck (Figure E-4).

h. The crew member continues to lower the penetrator until the edge of the support fluke is resting on the aircraft deck (Figure E-5).

i. The crew member continues to lower the penetrator until the patient is lying on his back on the aircraft deck.

j. Once the patient is lying on his back with the penetrator on top of him, the crew member releases the safety straps and raises the penetrator off the patient (Figure E-6), secures the patient, and reports to the PC when ready for forward flight.

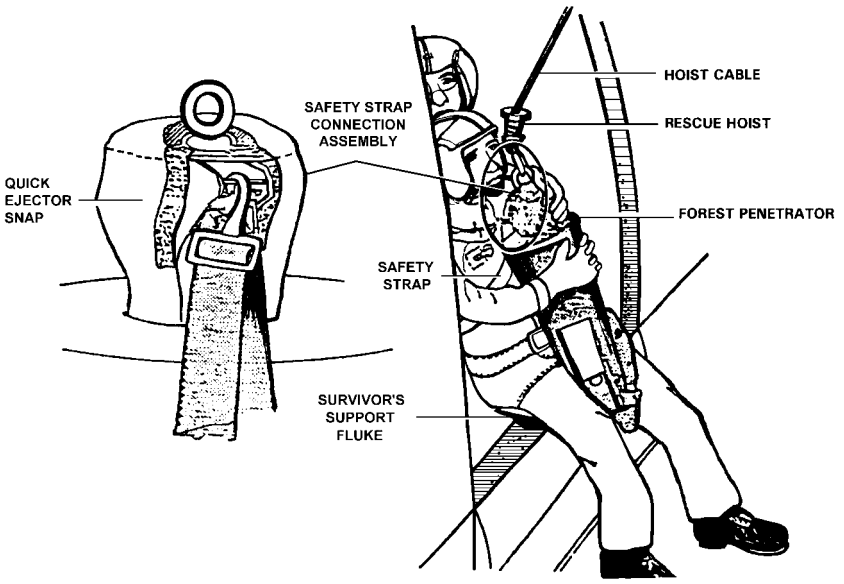

Figure E-4. Crew member lowers forest penetrator.

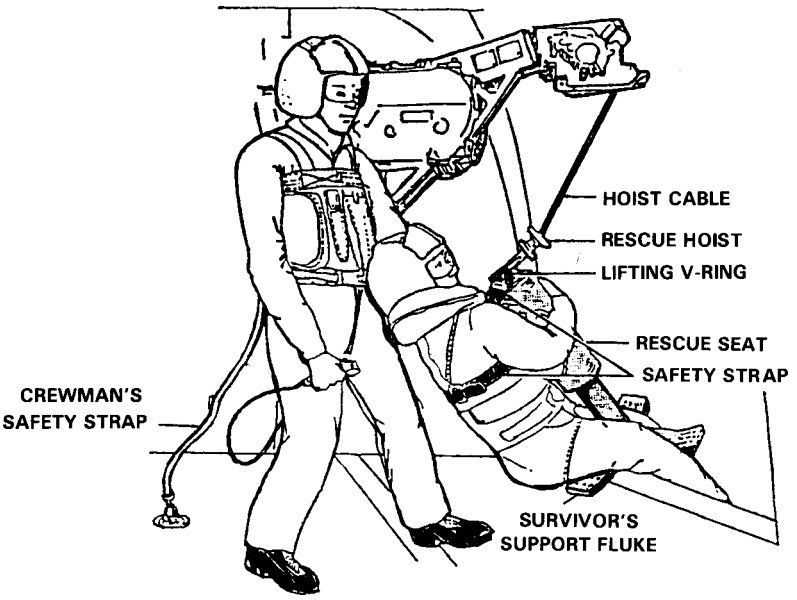

Figure E-5. Crew member lowers the rescue seat until the edge of the patient's support fluke is resting on the aircraft deck.

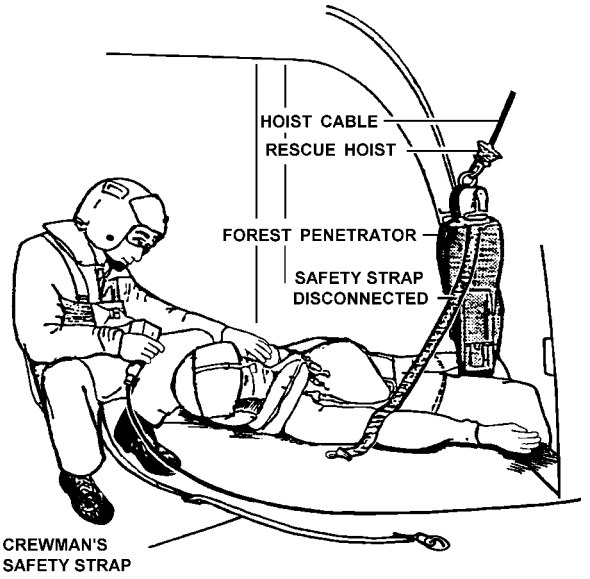

Figure E-6. Crew member raises the forest penetrator off of the patient with the hoist.

Section IX. SKED RESCUE SYSTEM

E-26. General

The SKED litter is a compact and lightweight patient transport system designed to evacuate one patient at a time. It is used for both land and water rescue. The SKED litter provides the patient with support and protection, but it is not designed as a spinal immobilization device. If a spinal injury is suspected, the patient is to be secured using a spinal backboard prior to being placed on the litter (paragraph 9-6). A backboard must be used in conjunction with the SKED litter on patients who have sustained shoulder injuries. When the SKED litter is used with the hoist operator vest, the medic can be hoisted simultaneously with the patient. This allows the medic to continue resuscitation or oxygen therapy during the hoist rescue operation.

E-27. Configuration

a. The SKED litter (Figure 9-7) is olive drab green and weighs approximately 16 pounds with accessories. It consists of a 3-foot by 8-foot sheet of low-density polyethylene plastic with rows of grommets along its edges. The patient is secured by enveloping him in the litter and securing him with lashing straps threaded through the grommets. Four nylon straps are used in hand-carrying the litter.

b. The SKED carrying case is used to transport the litter, spinal immobilizer device, lift slings, tow straps, and the vertical lift rope.

c. For high-angle operations, the litter is used in a vertical configuration with two lift slings and a $^{3}/_{8}$-inch static kernmantle rope as a bridle.

d. The SKED basic rescue system includes the following:

- Litter.
- Backpack.
- Towing harness.
- Horizontal lift sling.
- Vertical lift sling.
- Large carabiner.
- Tow strap.

e. For water operations, the SKED litter can also be used with a flotation kit. The flotation system enables the SKED litter to float vertically in the water providing enough positive flotation to support

the patient and two rescuers. The inflatable logs are made of a nylon outer shell. They are equipped with a carbon dioxide (CO_2) rapid inflator, an oral inflator, and a quick dump valve which allows the float logs to deflate in seconds for rapid breakdown and storage. The quick dump valve also acts as an overpressure valve to prevent overinflation.

E-28. Operation of the SKED Litter

a. Preparing the SKED Litter.

(1) Remove the litter from the carrying case and place it on the ground.

(2) Unfasten the chest strap, place one foot on the SKED, and unroll it completely.

(3) Bend the SKED litter in half (opposite way of curl) and back roll. Repeat with the opposite end of the litter. This will allow the SKED litter to lay flat.

b. Placing the Patient on the SKED Litter Using the Log Roll Method.

(1) Place the SKED litter next to the patient. Ensure that the head end of the litter is adjacent to the head of the patient. Place cross straps under SKED.

(2) Log roll the patient away from the litter and slide the SKED litter as far under the patient as possible. Gently roll patient down onto the SKED litter.

(3) Slide the patient to the center of the litter. Be sure to keep the patient's spinal column as straight as possible.

(4) Pull straps out from under the SKED litter and fasten to the buckles.

c. Placing the Patient on the Litter Using the Slide Method.

(1) Position the foot end of the SKED litter at the head of the patient.

(2) Straddle the litter and support the patient's head, neck, and shoulders.

(3) Grasp the foot straps of the SKED litter and slide it under the patient.

(4) Center the patient on the SKED litter and fasten the straps with the buckles.

d. Positioning and Fastening the Straps with the Buckles.

(1) Lift the sides of the SKED litter and fasten the four cross straps with the buckles directly opposite the straps.

(2) Feed the foot straps through the unused grommets at the foot end of the SKED litter and fasten with the buckles.

e. Lifting and Descending (*Horizontal*).

(1) Insert one end of the head strap through the lift slot at the head end of the litter.

NOTE

Two nylon webbing straps rated at 3,800 pounds each are used for horizontal lift or descent. The head strap is 4-inches shorter than the foot strap and is used at the head end of the litter only.

(2) Bring the strap under the SKED litter and through the lift slot on the opposite side.

(3) Equalize the strap and repeat the procedure with the other strap at the foot end of the litter.

(4) Equalize all four straps and secure them to the large steel locking carabiner.

(5) Before hoisting, hoist operator ensures that ground personnel have a tag line attached to the foot end of the litter and are ready for hoisting.

(6) While the litter is being lowered, or hoisted back up into the aircraft, ground personnel use the tag line to prevent the litter from swinging or spinning. The tag line is also used to keep the litter parallel to the aircraft and the patient's head toward the tail rotor.

f. Lifting or Descending (*Vertical*).

(1) Pass each end of the rope through the grommets at the head end of the litter. Leave approximately 1 to 2 feet between the knot and the litter.

NOTE

A 30-foot length of $^{3}/_{8}$-inch static kernmantle rope with a figure eight knot tied in the center is used to configure the SKED litter for a vertical lift or descent.

(2) Continue feeding the rope through all available grommets and carrying handles all the way to the foot end of the SKED litter. Ensure both ends of the rope are even.

(3) Pass the ends of the rope through the grommets at the foot end of the SKED litter. Tie the ends of the rope together with a square knot.

(4) Bring the ends of the rope up and over the end of the SKED. Pass the rope through the carrying handles and secure it with a square knot. For safety, add a half-hitch knot.

g. Conducting Water Operations (*Figure E-7*).

(1) Unroll the SKED litter and lay it flat.

(2) Fasten the two lower cross straps and tighten them enough to pull the sides up and prevent the SKED litter from bending. Fasten the two foot straps bringing the foot end up to form a toboggan-like shape.

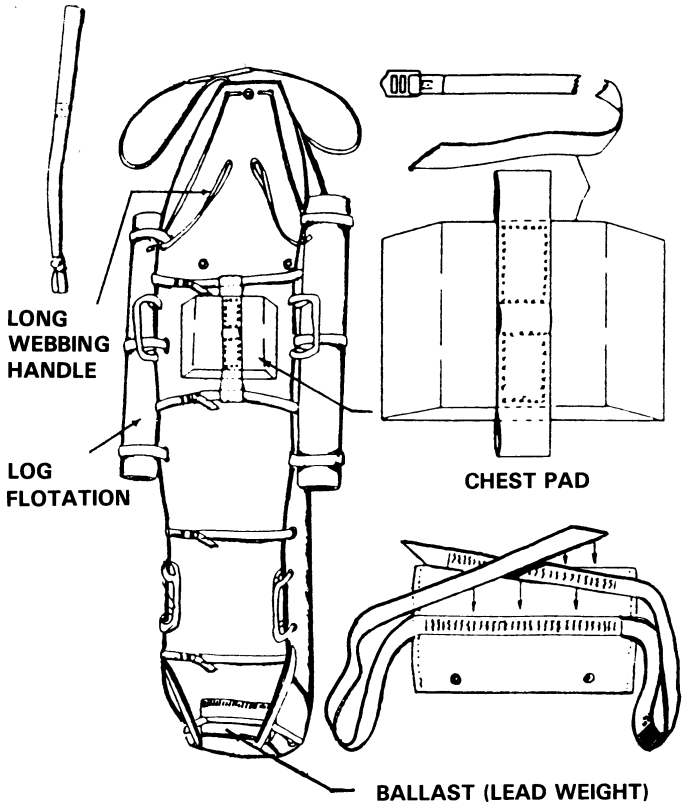

Figure E-7. SKED litter configured for water operations.

(3) Attach the ballast (lead weight) inside the foot end of the SKED litter by placing it between the two grommets at the foot end. Pass the straps through the grommets from the inside out, and lay them across the Velcro on the ballast bag.

(4) Attach the two long webbing handles by passing them, from the outside in, through the unused grommets in the shoulder area.

(5) Attach the flotation logs to the SKED litter by passing one end of the retaining straps through the proper slots in the SKED litter and fasten them to their opposite ends using the buckles. It is critical that the straps go all the way around the logs and through the slots on the SKED litter.

(6) The SKED logs can be inflated either before or after attachment.

(7) Upper cross straps pass through the loops on the chest pad. Cross straps should then be fastened and left in a loose position.

h. Inflating the Flotation Log (Figure E-8).

(1) Pull on the inflator tab to activate the CO_2. Do not remove the CO_2 cylinder from the detonator until you have a replacement cylinder. Removing the CO_2 cylinder allows the float to deflate.

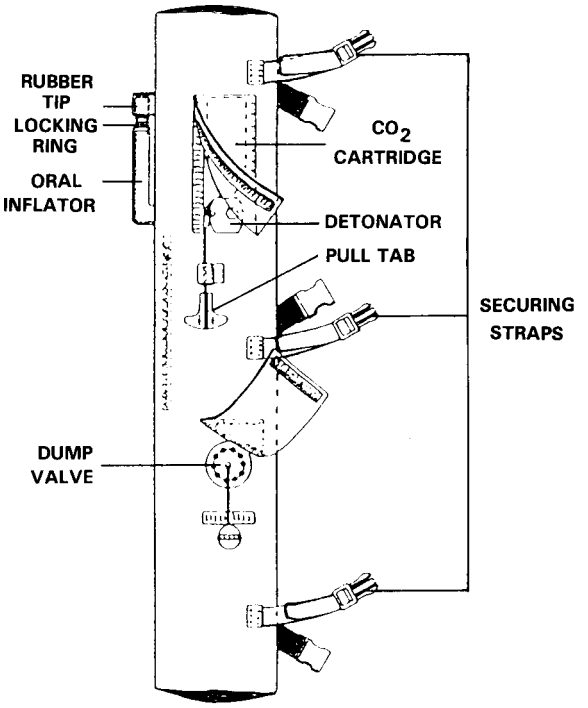

Figure E-8. Inflating the flotation log.

(2) To use the oral inflator, turn the locking ring to allow the end to be depressed. Press the rubber tip against your teeth to open the valve and blow into it. When the desired amount of air is inside the float, release the inflator and secure the locking ring. The oral inflator has a spring-loaded safety valve which must be depressed to add or release air. The locking ring prevents the accidental release of air.

(3) To deflate the flotation log, pull the ball attached to the dump valve and squeeze the float until deflated.

E-29. Maintenance of the SKED Litter

a. All cleaning and preventive maintenance performed on the SKED litter and its components takes place at the unit level.

b. All SKED litters and accessories are subject to an inspection upon issue and a calendar inspection in each subsequent year. The SKED litter should also be inspected after every vertical or horizontal ascent or descent. All components used in salt water rescue operations must be rinsed in fresh water as soon as possible.

(1) To perform a serviceability inspection on the SKED litter, complete the following steps:

(*a*) Remove all equipment from carrying case.

(*b*) Unroll the SKED litter and remove all ropes and straps.

(*c*) Inspect all ropes and straps for cuts, tears, and abrasions.

(*d*) Check all hardware for security of attachment, condition, and ease of operation.

(*e*) Check the litter for cuts, tears, and holes.

(*f*) Examine the carrying case for stains, dirt, and general condition.

(2) To repack the SKED litter, complete the following steps:

NOTE

When not in use, the SKED litter is stored in the carrying case.

(*a*) Lay the litter out and place the chest strap, buckle side down, under the foot end of the SKED.

(*b*) Starting at the head end, roll the SKED up as tight as possible.

(*c*) Continue to roll the SKED up using the knee to keep the litter from unrolling.

(*d*) Fasten the chest strap to the buckle and place the SKED litter in the back pack.

Section X. RESCUE (STOKES) LITTER

E-30. General

The Stokes litter and flotation kit are designed to perform helicopter rescue operations in areas not suitable for landing and where other evacuation means are not available or practical.

a. The Stokes litter carries one patient and can be used with the high performance hoist overland or overwater. The Stokes litter, when fitted with a backboard, can be used to immobilize a patient who has suffered a back injury.

b. For use overwater, a flotation kit must be installed in order to keep the litter upright and stable. This kit consists of flotation logs, lift inserts, ballast bar, and a two-piece rescue litter hoisting sling.

E-31. Configuration

The Stokes litter is a metal litter with wire mesh netting for the bed (paragraph 9-2(*a*)(6)). The flotation kit for the Stokes litter is designed to support the upper half of the litter, keeping that portion of the litter high in the water while the chest pad keeps the patient's face out of the water and prevents the litter from overturning. A ballast bar is placed on the foot of the litter to assist in keeping the litter floating at the proper angle. Retaining straps are used to secure the patient to the litter. Once secured to the Stokes litter, the patient requires no additional flotation devices.

E-32. Function

a. Once the aircraft has arrived at the rescue site, the hoist operator prepares the litter for hoisting and notifies the PC when ready to lower the litter. The PC then directs the hoist operator to begin lowering the litter, along with the tag line. Figure E-9 depicts the proper attachment of the tag line. Before hoisting, the hoist operator ensures that ground personnel have the tag line and are ready for the litter to be raised.

b. While the litter is being lowered, or hoisted back up into the aircraft, the ground personnel use the tag line to prevent the litter from swinging. The tag line is also used to keep the litter parallel to the skids of the aircraft and the patient's head toward the tail rotor.

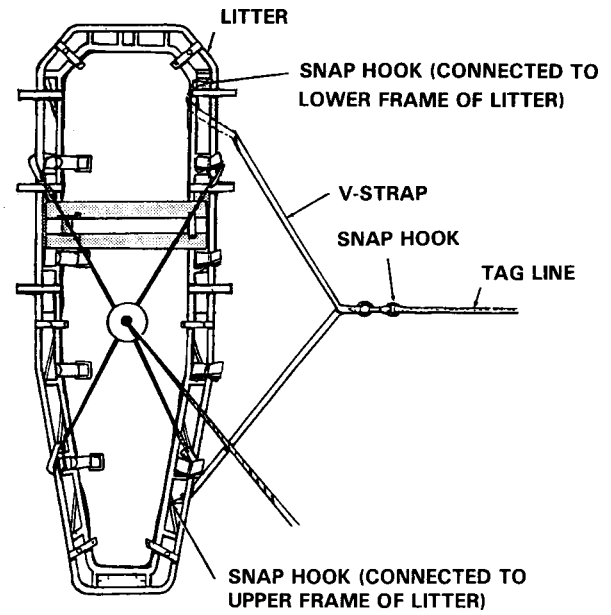

Figure E-9. Tag line attached to Stokes litter.

WARNING

Do not touch the litter until it contacts the ground and discharges the built-up static electricity.

c. The ground personnel disconnect the litter and signal to the hoist operator.

d. The hoist operator notifies the PC that the litter has been disconnected. Once the litter is disconnected, the PC repositions his aircraft to a tactically safe area to await instructions. Aircrews should never loiter in or circle around the pickup area while waiting.

CAUTION

Rifles, grenades, or other weapons and munitions and radios must be removed from the patient before placing him in the litter.

e. Once the ground personnel have the patient secured in the litter, they signal for the helicopter to move into position and lower the rescue hook.

f. The ground personnel then connect the hoisting sling to the rescue hook and signal to the hoist operator that the litter is ready to be hoisted (Figure E-10).

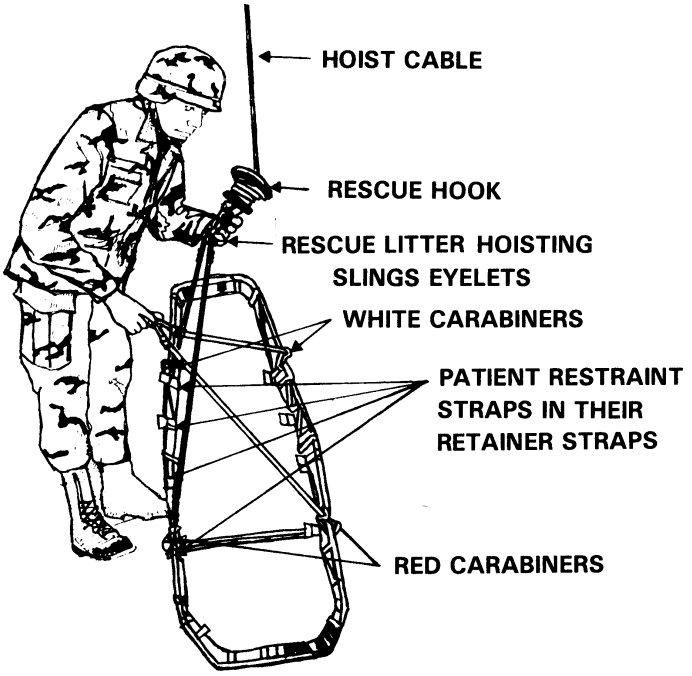

Figure E-10. Attaching hoisting slings to the rescue hooks.

NOTE

Red carabiners and white carabiners can be used to distinguish the head and foot ends of the Stokes litter for attaching the hoisting cables. The Stokes litter should be marked with colored paint corresponding to the carabiners.

g. In water rescues, a device must be employed to keep the litter afloat and to keep the head of the patient out of the water. The flotation device for the Stokes litter is similar to the US Coast Guard collar and is designed to support a patient in water. It is recommended that units having an AO that includes bodies of water have flotation devices on hand for use with this litter.

E-33. Maintenance

All serviceability inspections and cleaning of the Stokes litter are accomplished at the unit level.

a. Calendar Inspection. The calendar inspection includes a visual inspection for cracked welds and tubes, pinholes, security of mesh, and evidence of wear at the hoisting cable attaching points. The cables, carabiners, and hardware are visually inspected for wear and corrosion, and for signs of breakage, slippage, and fatigue.

b. Preflight Inspection. A preflight check is completed prior to each deployment of the Stokes litter to ensure safety. This visual inspection is done as a part of the overall preflight checks.

Section XI. POLELESS SEMIRIGID LITTER

E-34. General

a. The poleless semirigid litter is constructed of canvas reinforced by wood. It can easily be stored aboard the aircraft because it is lightweight. It can also be folded longitudinally into a manageable size.

b. The patient is secured on the litter by canvas flaps that are laid over the patient from either side with his arms outside. The flaps and, subsequently, the patient are secured by five seat belt-like straps. The patient's head is secured by a heavy canvas hood immobilizer. The hood holds the head in place with two straps: one across the forehead, and one across the chin.

c. This litter is also discussed in paragraph 9-2(*a*)(4).

E-35. Employment of the Poleless Semirigid Litter

To use the poleless semirigid litter, the following steps should be followed:

a. The patient is placed on the litter using the log roll method, if necessary.

b. The patient is secured to the litter using the straps across the body and head. The flaps are folded over the patient with arms on the outside, and the straps are firmly tightened, except in areas where serious injuries exist. The top four straps are routed over the body, and the bottom strap is routed under the feet for added support of the body weight.

c. Avoid strapping over or around injured extremities. For example, in the case of a fractured leg, the bottom strap would be routed under the foot of the uninjured leg to avoid worsening the injury.

d. The patient's head is secured by two straps (one under the chin and one over the forehead). The chin strap must be routed over the chin to avoid choking should the patient slide down in the litter

slightly during hoisting. In the event of a serious head injury, the hood assembly is easily removed from the litter. This allows the medic to attend to the injury even after the patient has been secured to the litter. The hood can then be reattached to the litter and to the patient prior to hoisting.

e. The litter is hoisted in the upright position using the large ring at the head of the litter. The ring at the bottom of the litter is used for the tag line. The litter has a carrying handle at each corner of the litter for maneuvering the litter on the ground.

E-36. Function

a. Once the aircraft has arrived at the rescue site, the hoist operator prepares the litter for hoisting and notifies the PC when he is ready to lower the litter. The PC then directs the hoist operator to begin lowering the litter, along with the tag line. Before hoisting, the hoist operator ensures that ground personnel have the tag line and are ready for the litter to be lowered.

b. As the litter is being lowered, or hoisted back to the aircraft, the ground personnel use the tag line to keep the litter from swinging.

WARNING

To avoid serious shock, do not touch the litter until the hoist hook touches the ground and discharges the static electricity.

c. The ground personnel disconnect the litter and signal to the hoist operator.

d. Once the hoist operator has notified the PC that the litter has been disconnected, the PC then repositions the aircraft to a tactically safe area to await instructions to return to complete the hoist operation. Aircrews should never loiter in or circle the pickup area.

e. All equipment, such as weapons, grenades, or radios, must be removed from the patient prior to placing him on the litter.

f. Once the ground personnel have the patient secured in the litter, they signal the helicopter to move into position and lower the rescue hook.

g. The ground personnel then hook the ring at the head of the litter.

h. The hoist operator guides the litter into the door.

i. Once the patient is secure in the aircraft, the hoist operator recovers the tag line.

j. The hoist operator readies the cabin for forward flight and reports to the PC.

E-37. Maintenance

Cleaning and serviceability inspections are to be accomplished at the unit level.

a. Inspection. The litter is inspected in a systematic method starting at the top lifting ring, moving downward and finishing with the bottom lifting ring.

(1) The top lifting ring is carefully inspected for any sign of corrosion, cracks, wear, or burrs. If any of these conditions are found, the litter is unserviceable until repaired.

(2) The lifting ring attachment straps are inspected for signs of any rips, tears, rotting, or loose stitching.

(3) On the head harness assembly, the inspection includes determining if all attachment clips are present and serviceable. The fabric portion of the harness is inspected for rips, tears, and rotting.

(4) The main body of the litter is inspected for tears, runs, or rips in the canvas. Ensure that the belt buckles fasten securely and have no rips or tears in the material. There should be no loose stitching or torn seams.

(5) The wood slats on the litter should be removed and visually inspected for cracked, broken, or splintered pieces.

b. Repairs and Modifications. Any repairs or modifications to the poleless semirigid litter are to be performed at echelons above the unit level.

Section XII. SURVIVOR'S SLING (HORSE COLLAR) AND CABLE WEIGHT COVER

E-38. General

The survivor's sling (horse collar) and cable weight cover are used in performing helicopter rescue operations where landing is impossible, either overland or overwater. It can be used to lower a rescuer as well as raise a patient to the helicopter. The cable weight cover is a cushioned cover device that envelopes the metal in the hoist cylinder.

E-39. Configuration

a. The horse collar is a buoyant device consisting of a kapok filling encased in a bright yellow, waterproof cover. Webbing, woven through the cover with both ends terminating in two V-rings, is used to attach the sling to the helicopter rescue hook. Two retainer straps, one long with a quick-ejector snap and one short with a V-ring, are fastened to the webbing of the sling and are enclosed in slide fastener-secured envelopes.

b. The cable weight cover has four snap fasteners and a cord tie that keeps the cover secure around the cable weight. The cable weight cover protects the patient from injury that could result from accidental contact with the metal cable weight.

E-40. Function

a. A webbing strap running through the cover has a V-ring at both ends and is used for attaching to the double rescue hook on the cable. Two red retainer straps marked PULL, one with a quick ejector snap and the other with a V-ring, are provided with the sling and are enclosed in zippered pockets.

b. Once the aircraft is over the patient, the hoist operator readies the survivor's sling for use and advises the PC when the sling is ready to be lowered. The PC then directs the hoist operator to lower the sling to the patient or ground personnel.

WARNING

Do not grab the webbing handle on the survivor's sling. This may raise the patient's arms which could cause the patient to fall from the sling before entry into the aircraft.

c. The medic or ground personnel signal to the hoist operator once they have placed the patient in the survivor's sling and are ready for hoisting.

d. Once the patient has been hoisted to the aircraft door, the hoist operator lowers the patient while simultaneously pulling him into the aircraft.

e. Once inside the aircraft, the hoist operator—

(1) Releases the safety strap.

(2) Secures the patient in the aircraft.

(3) Disconnects the survivor's sling from the hoist.

(4) Reports to the PC when ready for forward flight.

E-41. Maintenance

Cleaning of the survivor's sling and cable weight cover is performed at the unit level. Component repairs or other maintenance actions required are performed at the intermediate level or higher.

a. Calendar Inspection.

(1) All survivor's slings and cable weight covers are inspected upon issue and then again each subsequent year.

(2) This inspection consists of a visual inspection, marking inspection, and proof-loading testing.

b. Visual Inspection.

(1) Inspect the fabric for cuts, deterioration, and abrasions.

(2) Inspect the seams for proper adhesion and stitching.

(3) Inspect the retainer straps for security of attachment and wear.

(4) Inspect all hardware for security of attachment and wear.

c. Marking Inspection. Ensure markings are correct and legible. Restore faded markings.

E-42. Modifications

The only authorized modification at the unit level of maintenance is the fabrication of the assist handle.

Section XIII. HOISTING VEST

E-43. General

The hoisting vest is sometimes referred to as a *full body fishnet*. It is designed to evacuate one patient at a time. It is used for overland rescues and shipboard transfers of uninjured or ambulatory patients. If overwater hoisting is expected, a flotation device shall be worn over the hoisting vest.

E-44. Configuration

The hoisting vest is constructed of green lightweight nylon mesh material and is designed to accommodate one person. To facilitate donning and size adjustments of the vest, two rings are provided for each of the four snap hooks. Two adjustable chest straps shall be attached to the lifting V-ring for hoisting (Figure E-11).

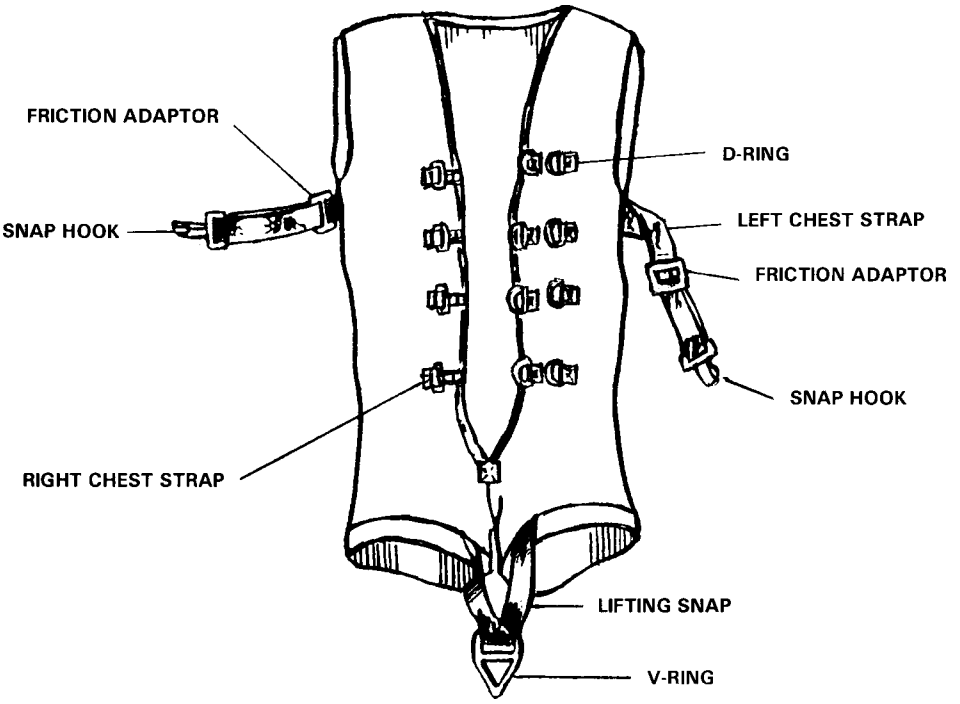

Figure E-11. Hoisting vest.

E-45. Employment of the Hoisting Vest

a. Should the aircrew elect to use the hoisting vest for a personnel transfer from the aircraft to the ground, the following procedures should be followed:

(1) The crew member helps the transferee don the hoisting vest.

(2) The transferee steps through the leg openings and draws up the vest. He then places his arms through the openings (coat fashion) and pulls the vest over the shoulders with the opening in front.

(3) The crew member connects the snap hooks to the rings. He then attaches the back support straps with the snap hooks to the lifting V-ring (Figure E-12). The crew member then connects the lifting V-ring to the rescue hook and signals the hoist operator to transfer the patient.

.

NOTE

The tag line procedures are used to increase the safety factor of the transfer.

b. When performing the single-man hoist recovery (Figure E-13), place the patient in the hoisting vest and fasten the torso snaps. Attach the adjustable chest lifting straps to the lower portion of the V-ring

on the leg lifting strap. Attach the rescue hook to the lifting V-ring of the hoisting vest. Adjust the hoisting vest chest straps as necessary to ensure a level or upright position. Ensure the knurled fitting on the locking carabiner is down and locked.

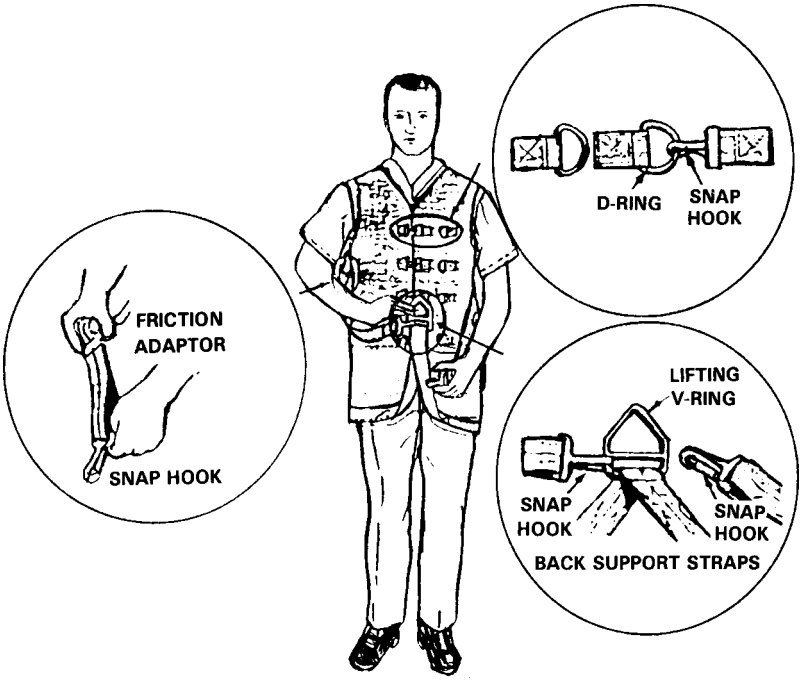

Figure E-12. Hoisting vest donning procedures

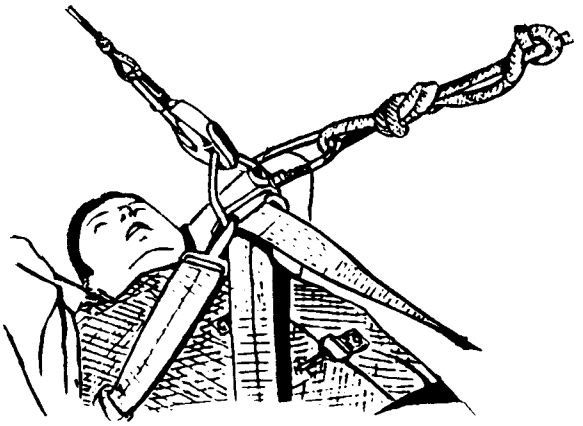

Figure E-13. Single-man hoist to vest.

c. When performing the dual-man hoist recovery (Figure E-14), attach the rescue hook to the locking carabiner of the crewman hoisting vest. Attach the locking carabiner of the belay line through the lifting V-ring of the hoisting vest. Route a locking carabiner between the lifting V-ring of the hoisting vest and attach to both locking carabiners. Connect the locking carabiner to the hoisting vest lifting the V-ring of the survivor's vest. Ensure the knurled fittings on the locking carabiners are down and locked.

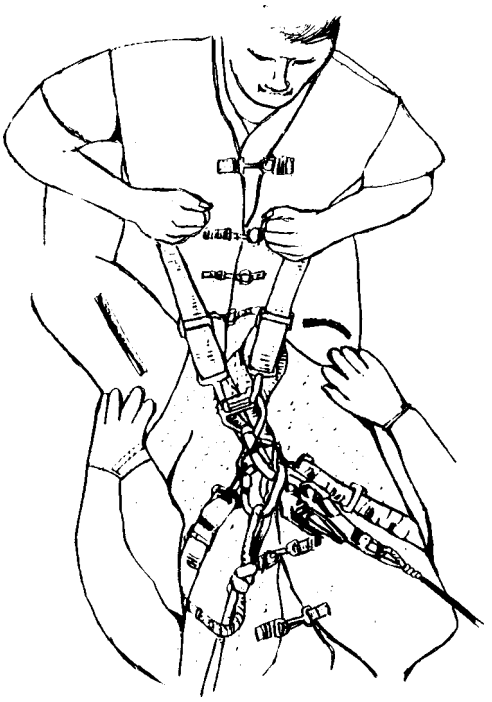

Figure E-14. Dual-man hoist to vest.

E-46. Maintenance of the Hoisting Vest

a. All cleaning and preventive maintenance performed on the hoisting vest is done at the organizational level.

b. The hoisting vest should also be inspected after every ascent and descent. If the hoisting vest is used during salt water rescue operations, the vest must be rinsed in fresh water as soon as possible after its use.

(1) A serviceability inspection on the hoisting vest is accomplished by—

- Inspecting the seams for broken stitching.
- Inspecting all straps for cuts, tears, and abrasions.

- Inspecting the nylon mesh material for cuts, tears, dirt, and general condition.
- Checking all hooks, rings, and friction adaptors for the security of attachment, corrosion, damage, wear, and ease of operation.

(2) If faults are found, do not use the hoisting vest until repairs are made.

(3) Any repairs to the hoisting vest are performed at echelons above the organizational level.

APPENDIX F

THE USE OF SMOKE AND OBSCURANTS IN MEDICAL EVACUATION OPERATIONS

F-1. General

a. This appendix provides guidance for AMEDD personnel in the use of smoke and obscurants in medical evacuation operations.

b. The modern battlefield extends from the rear area of friendly units, across the main battle area, deep into the enemy's territory. Throughout the battlefield, forces acquire and engage targets based on visual, laser, and microwave technologies. Friendly and enemy units use smoke and obscurants across the battlefield as a combat multiplier. The use of smoke and obscurants to mask combat operations is dictated by the tactical commander. He normally provides the operational guidance for units or elements operating in an area requiring obscuration. Permission to employ smoke and obscurants solely to mask medical evacuation operations may not be approved. However, if the tactical commander's plan indicates that smoke operations are to be employed in a given AO, the CHS planner should consider both the advantages and disadvantages posed by their employment. Factors to consider are the—

- Phase of the tactical operation in which smoke and obscurants will be employed.
- Effect on ground and air evacuation routes when operating in an obscured environment (such as limited hours of use, checkpoints or convoy requirements, or the elimination of NOE approaches).
- Potential for exploiting the use of the cover and concealment provided for clearing the battlefield of casualties, especially in the defense.
- Potential requirements for smoke generation to perform the medical evacuation mission which would not detract from the tactical capability and requirements.

c. Smoke can also be used to identify unit areas or LZs for which a medical evacuation request has been received. Further, smoke can indicate wind direction at a landing site for air ambulance operations.

d. For specific information on the employment of smoke and smoke generation equipment, refer to FM 3-50.

F-2. Employment of Smoke and Obscurants

Smoke and obscurants are employed to protect friendly forces from attack during the offense or defense.

a. Smoke and obscurants disrupt enemy combat operations throughout the depth of the battlefield and across the operational continuum. They—

- Disrupt the ability to communicate.
- Conceal friendly forces.

- Deceive the enemy.
- Identify and signal.
- Degrade the effect of DE weapons.

b. The benefit to CHS forces is derived through the tactical commander's use of smoke to obscure friendly tactical maneuvers. This obscuration—

- Prohibits the enemy from knowing how many casualties have been inflicted.
- Aids the movement of CHS units and equipment.
- Enhances the ability to resupply forward deployed CHS elements.
- Aids in the tactical deception plan.

F-3. Geneva Conventions and the Use of Smoke and Obscurants in Medical Evacuation Operations

a. The 1949 Geneva Conventions for the Amelioration of the Condition of the Wounded and Sick in Armed Forces in the Field (GWS) provides protection of medical personnel and units from intentional attack so long as they carry out no duties harmful to the enemy (Article 21, GWS). In order to facilitate their identification so as to prevent their intentional attack, medical units, equipment, and personnel are authorized to display the distinctive emblem of the Red Cross (Article 42, GWS). Under tactical conditions, when requirements for concealment outweigh those for recognition, all distinctive emblems may be obscured or removed from medical equipment if ordered by competent military authority and authorized by Army regulations. Display of the distinctive emblem is not required to afford the right against intentional attack; attack of medical units, equipment, and personnel not displaying the distinctive emblem is prohibited if opposing forces realize that the forces about to be attacked are medical units performing humanitarian duties.

b. The use of smoke or obscurants in medical evacuation operations does not differ from the use of camouflage techniques and is not prohibited by the GWS. Its only effect will be to obscure the identity of units as they perform their humanitarian mission. Given the lethality of the modern battlefield, however, it would be difficult, if not impossible, to say that such obscuration of these units, equipment, and personnel would necessarily increase their risk from unintentional attack.

c. It is recognized that, with the advent of precision-guided munitions and electro-optical or laser target acquisition devices, there will be a substantial use of smoke and other obscurants on the modern battlefield as a result of normal combat operations. The legitimate use of obscurants by combatants to thwart the accuracy of precision guided munitions may increase the risk to units and equipment not employing obscurants. This may possibly place medical units and equipment at greater risk if they fail to employ them. Further, medical evacuation operations will have to be carried out on the battlefield as medical personnel find it, which will include obscurants employed for normal combat operations.

d. For additional information on the protections afforded by the Geneva Conventions, refer to Appendix A and FM 8-10.

F-4. Use of Smoke in Aeromedical Evacuation and Hoist Rescue Operations

a. Smoke can be used effectively in aeromedical evacuation and overland hoist rescue operations to—

- Identify the landing site.
- Ensure the LZ is controlled by friendly forces.
- Determine surface wind direction.
- Provide cover and concealment.

(1) Colored smoke is an excellent daytime marking method. The smoke generated from a smoke grenade is difficult to detect more than 2 to 3 miles away, but an aircraft in the area should have little difficulty in noting its location. As more than one unit may be operating in a given area, it is important that the unit requesting an aeromedical evacuation mission be able to signal the aircraft as to the correct landing site to use. Radio communications produce an electronic signature. The electronic signature created from a prolonged transmission to guide an air ambulance to the landing site may not be an acceptable tactical risk.

(2) When a unit employs colored smoke to mark a landing site, the aircrew should identify the color and confirm it with the ground personnel. The transmission time required for this procedure is limited, thereby reducing the electronic signature.

(3) The employment of smoke at the landing site also enables the aircrew to determine the wind direction.

(4) In some environmental conditions (such as desert operations), the phenomenon of inversion occurs. When this occurs, the smoke and obscurants used in normal combat operations may provide an upper layer of smoke under which the air ambulance can operate.

b. The use of smoke on aeromedical evacuation operations can be a disadvantage if incorrectly employed or if the smoke generated in the tactical operation interferes with the medical evacuation mission. Smoke can obscure the landing site and make NOE approaches unusable. Further, smoke on the battlefield can force aircraft to fly at higher than planned heights. This increases the risk of being acquired by the enemy.

c. In overwater hoist rescue operations, the employment of smoke for marking the patient pickup area, for determining surface wind conditions, and for spatial orientation is essential. The smoke employed by the aircrew must not interfere with the conduct of the operation or mask the location of the individual to be rescued.

F-5. Employment of Smoke in Ground Medical Evacuation Operations

The employment of smoke during ground evacuation operations must be in consonance with the tactical commander's plan. Smoke can mask medical evacuation operations on the battlefield, but must not interfere with the tactical mission. In all combat operations, but especially in MOUT, smoke can be employed to cover and conceal—

- Movement across open areas.
- Extraction of casualties from vehicles.
- Entry and exit into/out of structures.

APPENDIX G

TACTICAL STANDING OPERATING PROCEDURE

G-1. General

This appendix provides a sample TSOP for a medical evacuation battalion. It should not be considered as all-inclusive. It may be supplemented with the information and procedures required for operating within a specific command or special operation.

G-2. Purpose of the Tactical Standing Operating Procedure

The TSOP prescribes policy, guidance, and procedures for routine support of tactical operations of a specific unit. It should cover broad areas of unit operations, but be sufficiently detailed to provide newly assigned personnel with the guidance required for them to perform their mission. A TSOP may be modified by the TSOP and OPLANs/OPORDs of higher headquarters. It applies to a specific unit and all subordinate units assigned and attached. Should a TSOP not be in conformity with the TSOP of the higher headquarters, the higher headquarters' TSOP governs. The TSOP is periodically reviewed and updated as required.

G-3. Format for the Tactical Standing Operating Procedure

a. There is not a standard format for all TSOPs; however, it is recommended that a unit TSOP follow the format used by its higher headquarters. The TSOP can be divided into sections (specific functional areas or major operational areas) and further subdivided into annexes. An annex can be further subdivided into appendixes and then into tabs. Appendixes can be used to provide detailed information on major subdivisions of the annex, and tabs can be used to provide additional information (such as report formats or area layouts) addressed in the appendix.

b. Regardless of the format used, the TSOP follows a logical sequence in the presentation of material. It should discuss the chain of command, major functions and staff sections of the unit, operational requirements, required reports, necessary coordination with higher and subordinate elements for mission accomplishment, programs (such as command information, PMM, and combat stress control) and other relevant topics.

c. Pagination of the TSOP can be accomplished by starting with page 1 and numbering the remaining pages sequentially. If the TSOP is subdivided into sections, annexes, appendixes, and tabs, a numbering system that clearly identifies the location of the page within the document can be used. Annexes are identified by letter and are listed alphabetically. Appendixes are identified by numbers and arranged sequentially within a specific annex. Tabs are identified by a letter and are listed alphabetically within a specific appendix. After numbering the initial sections using the standard numbering system (sequentially starting with page 1 through to the end of the sections), number the annexes and their subdivisions. They are numbered as the letter of the annex, the number of the appendix, the letter of the tab, and the page number. For example, page 4 of Annex D is written as "D-4"; page 2 of Appendix 3 to Annex D is written as "D-3-2"; page 5 of Tab A to Appendix 3 of Annex D is written as "D-3-A-5." This system of numbering makes the pages readily identifiable as to their place within the document as a whole.

d. In addition to using a numbering system to identify specific pages within the TSOP, descriptive headings should be used on all pages to identify the subordinate elements of the TSOP.

(1) The first page of the TSOP should be prepared on the unit's letterhead. The remaining pages of the major sections should include the unit identification in the upper right hand corner of the page (for example: "XXX Medical Evacuation Battalion").

(2) A sample heading for an Annex is: "ANNEX B (Command Post) to XXX Medical Evacuation Battalion."

(3) A sample heading for an Appendix to Annex B is: "APPENDIX 3 (Command Post Security) to ANNEX B (Command Post) to XXX Medical Evacuation Battalion."

(4) A sample heading for a Tab to Appendix 3 to Annex B is: "Tab A (Tactical Operations Center [TOC] Security) to APPENDIX 3 (Command Post Security) to ANNEX B (Command Post) to XXX Medical Evacuation Battalion."

e. As the TSOP is developed there may be an overlap of material from one annex to another. This is due in part to similar functions that are common to two or more staff sections. Where overlaps occur, the material presented should not be contradictory. All discrepancies will be resolved prior to the authentication and publication of the TSOP. The TSOP is authenticated by the unit commander.

G-4. Sample Tactical Standing Operating Procedure (Sections)

The information contained in this paragraph can be supplemented. It is not intended to be an all-inclusive listing. Different commands will have unique requirements that need to be included.

a. The first section of the TSOP identifies the specific unit/headquarters that developed it.

(1) *Scope*. This document establishes and prescribes procedures to be followed by the unit identified and its assigned, attached, or OPCON units/elements.

(2) *Purpose*. This document provides policy and guidance for routine tactical operations of this headquarters and its assigned, attached, or OPCON units.

(3) *Applicability*. Except when modified by policy guidance, TSOP, or OPLANs/OPORDs of the higher headquarters, this document applies to this unit and to all units assigned, attached, or under OPCON for combat operations. These orders, however, do not replace judgment and common sense. In cases of nonconformity, the document of the higher headquarters governs. Each subordinate element will prepare a unit TSOP, conforming to the guidance herein.

(4) *References*. This paragraph can include any pertinent regulations, policy letters, higher headquarters TSOP, or any other appropriate documents.

(5) *General information*. This paragraph discusses the required state of readiness of the unit; primary, secondary, and contingency missions; procedures for operating within another command's AO; and procedures for resolution of conflicts with governing regulations, policies, and procedures.

b. The second section of the TSOP discusses the specific organization.

(1) *Organization*. This paragraph furnishes specific information concerning the authority for establishing the unit, such as applicable MTOE or other staffing documentation.

(2) *Succession of command*. The guidance for determining the succession of command is discussed.

(3) *Task organization*. Task organization is contingent on the mission and will be approved by the headquarters ordering deployment.

(4) *Joint, multinational, and interagency operations*. This paragraph provides guidance on any issues concerning C2 and TF organization in joint, multinational (Appendix M), and interagency operations. It also provides guidance on liaison officer requirements.

(5) *Organizational charts*. Contained in Annex A.

c. The third section of the TSOP discusses the unit functions.

(1) *Battalion headquarters*. This paragraph discusses the C2 of the assigned, attached, and OPCON units.

(2) *Headquarters detachment*. This paragraph discusses the functions of the headquarters detachment element, such as supervising movements, internal arrangements, area layout, physical security, and operation of the headquarters and staff.

(3) *Attached, assigned, and OPCON units*. This paragraph discusses the missions and functions of these units (such as providing medical evacuation of patients, emergency movement of blood and blood products, biologicals, CHL, and transportation of medical personnel and equipment).

(4) *Staff responsibilities*. This paragraph lists the unit's key personnel and their duties as prescribed in FM 101-5 and any command specific duties.

d. The fourth section of the TSOP pertains to staff operations and is subdivided into annexes.

G-5. Sample Tactical Standing Operating Procedure (Annexes)

Annexes are used to provide detailed information on a particular function or area of responsibility. The commander determines the level of specificity required for the TSOP. Depending upon the complexity of the material to be presented, the annex may be further subdivided into appendixes and tabs. If the annex

contains broad guidance or does not provide formats for required reports, paragraphs may be used. The annex should not require further subdivision. However, as the material presented becomes more complex, prescribes formats, or contains graphic materials, the annex may require additional subdivision. This paragraph discusses the subdivision of the annex by appendixes. It does not contain examples of subdividing the information presented in the appendixes into tabs. Applicable references such as ARs, FMs, and technical manuals should be provided in each annex. The number of annexes and their subdivisions presented below are not to be considered as an all-inclusive listing. Different commands will have unique requirements; therefore, supplementation of the information presented is permitted.

a. *Annex A*. (*Organizational Charts*).

b. *Annex B*. (*Command Post*).

(1) *General*. The battalion may operate main and/or forward CPs depending on the mission and tactical situation. Characteristics of the CPs include—

- Main CP. Normally located in the corps rear area. Personnel staffing is tailored to provide planning, coordinating, and C2 of assigned/attached/OPCON units. The area location for the main CP is selected by the battalion S3; the exact site is designated by the commander in coordination with the executive officer and battalion S3. The executive officer designates work areas within the main CP. The commander, HHD, serves as the headquarters commandant. His duties include coordinating for and obtaining construction, maintenance, and logistical services and support for the CP.

- Forward CP. Normally established in the objective area or at an ISB. The ISB is the forward designated staging base at which final preparation for assault operations are controlled and is generally a safe area for support operations. The forward CP is tailored to extend the commander's span of control and to better assess the situation on the ground and coordinate the arrival and subsequent activities of CHS organizations within the AO.

(2) *Battalion tactical operations center*.

- Definition. The TOC is the command element of the battalion containing communications and personnel required to command, control, and coordinate CHS operations. The TOC is located within a secure, controlled area whether at a main CP or forward CP.

- Purpose. The purpose of the TOC is to provide the commander, in a secure environment, current evaluated information and recommendations concerning CHS operations.

- Responsibilities. The battalion commander has overall supervision and control over the TOC. The battalion executive officer operates the TOC and has primary staff responsibility in the absence of the commander.

- Operations. The TOC will operate on a 24-hour basis. It is principally staffed by each primary staff section furnishing necessary manpower as required. Secure and nonsecure telephone communications connect the TOC to other staff sections within the CP area. Access to the TOC is strictly

controlled by means of an access roster, and if available, security badges. Only essential personnel and authorized visitors are allowed to enter. Each staff section will maintain a standing operating procedure (SOP) on the organization and operation of its element. All elements within the TOC will, when appropriate, maintain a current situational map of their specific operations. Discussion and portrayal of tactical plans outside of the security area is prohibited.

- Composition of the TOC. This is a listing of those personnel comprising the TOC. It normally includes the commander, executive officer, command sergeant major, principal staff members, and other specific staff members such as the S3 (air) or the battalion aviation maintenance officer.

- Tactical operations center configuration. This is a schematic representation of the physical layout of the TOC.

(3) *Responsibilities for the main CP services*. The HHD commander's main mission is to support the headquarters, medical evacuation battalion. He has the personnel and resources assigned to facilitate this mission. He plans and coordinates for providing shower, laundry, transportation, maintenance, and other required services. He is also responsible for establishing and maintaining security; supplying fuel and other POL products; establishing the support area for the main CP (orderly room, supply room, motor pool, billets, and dining facilities); providing and operating generators to meet electrical requirements.

(4) *Camouflage*. This appendix discusses what camouflage procedures are required, to include type and amount of required camouflage materials (such as nets and shrubs); display of the Geneva Conventions distinctive emblem on facilities, vehicles, and aircraft on the ground (STANAG 2931); and other pertinent policies, guidance, or procedures.

(5) *Message center*. This establishes procedures for the handling of classified messages; provides delivery and service of IMMEDIATE and FLASH messages to the appropriate staff section; establishes procedures for preparing outgoing messages; and establishes a delivery service to the servicing message center for transmission of outgoing messages.

c. *Annex C.* (*Administration and Personnel*). This annex outlines procedures relating to administrative and personnel matters and associated activities.

(1) *Personnel accountability*.

- Personnel Daily Summary (PDS). This provides the procedures for filling out and submitting a daily personnel status report. The instructions may include requirements for encrypting the report prior to transmission, and specific guidance on time of submission, corrections, or other administrative requirements.

- Casualty Feeder Report. This report is submitted on DA Form 1156. Instructions on the completion of the form and submission requirements are included.

- Witness statements on individuals. These statements are completed only when the recovery of a body is not possible or cannot be identified. It is submitted to the S1 within 24 hours of the incident.

(2) *Personnel management*.

- Replacements. Individual replacements will not be readily available during the initial phases of operations. The S1 will automatically initiate replacement requests for personnel who are reported on the PDS report as wounded in action (WIA), missing in action (MIA), or killed in action (KIA).

- Personnel actions. All personnel actions will be channeled through the S1. Company executive officers and first sergeants will be the company points of contact. Actions will be handled expeditiously and meet suspense dates (tactical situation permitting).

- Efficiency reports. This paragraph provides pertinent information on the completion and submission of these reports.

- Award recommendations. This paragraph delineates the responsibilities for and guidance concerning submitting recommendations for awards and for scheduling and conducting award ceremonies.

- Promotions. This paragraph discusses the procedures for submitting recommendations for promotion and scheduling and conducting promotion ceremonies.

- Correspondence. All correspondence addressed to higher headquarters will be submitted through the S1. Requirements for submission, preparation, and approval are also provided.

- Personnel records. This paragraph discusses requirements for coordination for this support and the procedures for having correspondence included in the official military personnel records of personnel assigned and attached.

(3) *Personnel services*. Personnel services are those activities pertaining to soldiers as individuals. Unless prohibited by the tactical situation, the services listed below will be available to all assigned and attached units.

- Sporting activities and morale and welfare activities.

- American Red Cross.

- Finance. This service includes disbursements and currency control, payday activities, currency conversion, check cashing, and the appointment of Class A agents.

- Legal services. Information and specific guidance on administrative boards, courts-martial authority and jurisdiction, legal assistance, and general services should be provided.

- Religious activities. Religious activities include chaplain support, services available from different faiths, schedule of services, and hospital visitations.

- Postal services. This includes hours of operation and services available.

- Post exchange services. This includes hours of operation and availability.

- Distribution. Pick up and delivery schedules and any command-specific issues/ procedures are provided.

(4) *Graves registration*. Commanders at all levels are responsible for the recovery, identification, and evacuation of US dead. This section discusses the responsibilities and procedures for unit-level GRREG activities for assigned and attached personnel.

NOTE

This activity is for unit members only. Medical evacuation units do not accept nor transport the remains of nonunit members. Remains will not be transported in ambulances under any circumstances.

- Responsibilities. This paragraph discusses both unit and battalion requirements.

- Disposition. Specific guidance on procedures, GRREG collection points, transportation requirements, and the handling of remains are provided.

- Hasty burials. Specific requirements for conducting hasty burials, marking, and reporting of grave sites are included.

- Personal effects. Guidance on accounting for personal effects and requirements for burial should a hasty burial be required is contained in this paragraph.

- Disposition of civilian and EPWs remains. The local civilian government is responsible for the burial of remains of its citizens. The remains of EPWs should be accomplished in separate cemeteries from US and allied personnel. If this is not possible, separate sections of the same cemetery should be used.

- Contaminated remains. This paragraph discusses handling and disposition requirements (to include protective clothing), procedures, and marking and reporting of burial site.

(5) *Public information*. This annex contains procedures for obtaining approval on the public release of information to include the hometown news release program. In overseas locations, specific guidance on the interaction of unit members with the news media should be provided.

(6) *Maintenance of law, order, and discipline*. This appendix should provide applicable regulations, policy, and command guidance on topics such as serious incident reports, notifications, and submission formats, straggler control, confinement of military prisoners, and EPWs (also discussed in (7) below).

(7) *Enemy prisoners of war*. This appendix discusses the unit responsibilities of EPWs surrendered to the medical unit. These procedures do not pertain to EPW patients captured by other units. **Medical personnel do not guard, search, or interrogate EPWs while in the CHS system; guards are provided by nonmedical personnel designated by the tactical commander for these duties**. Until EPW personnel can be evacuated to an EPW collection point, medical personnel should remember and enforce the basic skills: segregate, safeguard, silence, secure, and speed. (The speed portion of evacuating EPWs to designated collection points is of paramount importance to medical units.)

NOTE

The treatment of EPWs is governed by international and US law and the provisions of the Geneva Conventions. Personnel should be aware of these requirements and have ready access to the applicable regulations and policy guidance.

(8) *Allied, coalition, and interagency personnel*. This paragraph should provide guidance on the eligibility of allied, coalition, and interagency personnel for evacuation by Army ambulance and destination locations.

d. *Annex D*. (*Intelligence and Security*). This annex pertains to intelligence requirements and procedures and operations security (OPSEC) considerations.

(1) *Intelligence*. The S2 has the responsibility of collecting information to assist the commander in reaching logical decisions as to the best COAs to pursue. Priority information requirement (PIR) may include the location, type, and strength of the air defense threat; location, type, and strength of enemy air defense radars; known or suspected NBC activity; the medical threat; and issues which the commander considers to be PIR. In addition to PIR, the commander's critical information requirements (CCIR) are also considered.

(2) *Intelligence reports*. The S2 is responsible for disseminating all applicable estimates, analyses, periodic intelligence reports, and intelligence summaries generated within the battalion or received from higher headquarters. Information on submission of reports and suspenses on intelligence products and reports should also be addressed in this appendix.

(3) *Weather data*. As the battalion has air ambulance companies assigned or attached, weather data has significant impact. Weather conditions can also disrupt ground evacuation efforts.

(4) *Reports*. These include information acquired during the routine performance of duty by pilots, ambulance drivers, and medics.

(5) *Counterintelligence*.

- Camouflage. When ordered or directed by the tactical commander, all units will initiate and continually strive to improve camouflage operations of positions, vehicles, and equipment. Noise and light discipline is emphasized at all times.

- Communications security. These measures will be enforced at all times. The specific requirements and considerations are included.

- Signs and countersigns. This paragraph lists the signs and countersigns to be used during hours of darkness. It also includes reporting requirements and procedures if the sign/countersign is lost or compromised.

- Signal operating instructions.

- Document security. This paragraph discusses the procedures for marking and safeguarding classified material, both work documents and completed documents. (Reporting requirements in the event of compromise are also included.)

(6) *Captured or surrendered personnel, equipment, supplies, and documents*. This appendix provides specific guidance on the handling of captured personnel, equipment, supplies, and documents. The disposition of captured medical equipment and supplies is governed by the Geneva Conventions and is protected against intentional destruction.

(7) *Security*. This appendix discusses weapons security and checks, safeguarding of patient weapons, aircraft security, SOI (communications) security, TOC security, Sensitive Item Status Report, and escape and evasion.

e. *Annex E.* (*Operations*). This annex establishes procedures for S3 operations within the medical evacuation battalion, and provides a basis for standardization of medical evacuation operations in a tactical environment. It is essential that these procedures be standardized to ensure common understanding, facilitate control and responsiveness, and enhance mission accomplishment. Information on readiness levels, threat levels, warning levels, camouflage, security, area damage control, operations, and leader checklists (Appendix N) is also included.

(1) *Operational Situation Report*. Requirements for preparation, format, and submission of this report are discussed in this appendix.

(2) *Operations security*. This appendix provides the guidance and procedures for secure planning and conduct of combat operations.

- Priority intelligence requirements and security classification.

- Responsibilities. The commander is ultimately responsible for denying information to the enemy. The S3 is responsible to the commander for the overall planning and execution of operations. The S2 has the principle staff interest in assuming the required degree of OPSEC and has the primary staff responsibility for coordinating the efforts of all other staff elements in this regards. The OPSEC officer is

responsible for the preparation of the PIR and providing classification guidance. Additionally, the OPSEC officer identifies the priorities for OPSEC analysis and develops OPSEC countermeasures. The S2 coordinates with the S3 in planning OPSEC.

- Hostile intelligence threat. The different sources of intelligence (human intelligence, signal intelligence, and so forth) are discussed.

- Operational security program. This includes physical security, information security, and signal security.

- Document downgrading/declassification and classification authority.

(3) *Terrorist threat and countermeasures*. This appendix provides guidance on security measures to counter the terrorist threat, both on an individual and unit level (Appendix O).

(4) *Minefield threat*. This appendix provides guidance on the potential of minefields being established in the AO and delineates reporting requirements. (Specific minefield extraction techniques are contained in Annex L of this TSOP.)

(5) *Operations security and countermeasures*. This appendix discusses camouflage, light discipline, noise discipline, physical security, information security, and signal security.

(6) *Unit location update*. This appendix provides timely information on the location of main and forward CPs, location of subordinate unit CPs, location of helipads, and location of POL points.

(7) *Flight operations*. This appendix provides information concerning Army aviation LZs throughout the corps area and division areas; required reports; airdrop information; and mission debriefing.

(8) *Communications-electronics*. This appendix establishes communications policies, procedures, and responsibilities for the installation, operation, and maintenance of communications-electronics equipment.

- Responsibilities of the battalion communications-electronics NCOIC.

- Concept of operations.

- Command and control.

- Radio communications.

- Radio teletypewriter communications.

- Message/communications center service.

- Message handling procedures.

- Wire communications.
- Switchboard operations.
- Communications security and operations.
- Intelligence security.
- Meaconing, intrusion, jamming, and interference (MIJI) reporting and electronic communications countermeasures.
- Security violations. This prescribes procedures for reporting any event of action which may have jeopardized the security of communications.
- Destruction of material.
- Daily shift inventory.
- Physical security.
- Transmission security.
- Security areas. This discusses access procedures and rosters, access approval requirements, and prohibited items.
- Inventory of classified materials.
- Communications security officers and custodians. The appointment procedures, orders requirements, and duties of personnel are described.
- Safety. This discusses requirements for grounding, handling, and storing COMSEC equipment.
- Power units.

(8) *Rear battle responsibilities*. This appendix discusses rear battle responsibilities, task organization, and support for reaction forces.

f. Annex F. (*Nuclear, Biological, and Chemical Defense*). This annex prescribes the policy, guidance, and procedures for NBC defensive operations.

(1) Responsibilities.

(2) Nuclear, biological, and chemical reporting requirements and procedures.

- *Contamination avoidance*.

- *Protection*. Protection pertains to those measures each soldier must take before, during, and after an NBC attack to survive and continue the mission.

- *Decontamination*. This discusses equipment requirements, procedures, and types of decontamination (such as hasty). This paragraph also provides guidance on deploying clean ambulances into a contaminated area.

- *Mission-oriented protection posture*. This appendix provides guidance on the garments required for the different MOPP levels and identification procedures for personnel in MOPP.

- *Radiation exposure guidance*. Establishes OEG. Discussion in this appendix includes determining what constitutes a radiologic hazard, prescribing acceptable limits of potential casualty-producing doses of radiation, minimizing exposure, and protecting against electromagnetic pulses.

- *Masking and unmasking procedures*.

- *Radiological monitoring and survey operations*.

g. *Annex G*. (*Logistics*). This annex establishes logistics procedures for subordinate units when operating in a field environment.

(1) *Nonmedical supply and services*. A discussion of applicability, responsibilities, policy, classes of supply, requisition and delivery procedures, hours of operation, and other supply-relevant topics and available services (such as laundry and bath) can be addressed in this section.

(2) *Combat health logistics*. This paragraph discusses supply and resupply procedures for Class VIII; policies and procedures for the backhaul of emergency Class VIII on medical vehicles; and hours of operation for the supporting CHL facility.

(3) *Food service*. This appendix discusses responsibilities, hours of operation, Class I supplies, sanitation requirements, layout of field kitchen, fuel storage, maintenance, safety precautions, and administration, such as headcounts, required reports, shift schedules, MREs, and inspections/visits of subordinate unit kitchens.

(4) *Transportation/movement requirements*. This appendix may cover the following areas: deployability data (Appendix P), applicability; responsibilities; policies on speed, vehicle markings, transporting flammable materials, transporting ammunition and weapons, and so on; convoy procedures; safety; and accident reporting.

(5) *Fire prevention and protection*. Guidance on the use of the tent stoves, flammable materials, use of cigarettes, matches, and lighters, electrical wiring and appliances, safety of tents and occupants, spacing of tents, stoves and ranges, installation of British thermal unit (BTU) heaters, and fire-fighting equipment are presented in this appendix.

(6) *Field hygiene and sanitation*. This appendix provides uniform guidance and procedures for the performance of functions related to field hygiene and sanitation. It includes policies, communicable disease control, field water supply, water containers and cans, water purification bags, food sanitation, latrines, liquid waste disposal, and garbage and rubbish disposal.

(7) *Conventional ammunition down/upload procedures*. This appendix delineates responsibilities and provides guidance and procedures for the requisition, storage, and distribution of ammunition and weapons, reporting requirements, and safety.

(8) *Petroleum, oils, and lubricants accounting*.

(9) *Combat health logistics support*. The CHL concept of operations, requisition and distribution procedures, accountability, and reports are provided in this appendix.

(10) *Maintenance*. This appendix includes information on the maintenance requirements of the battalion and the location and hours of operation of maintenance units and collection points. Maintenance for medical equipment, vehicles, aircraft, and communications and other categories of equipment are discussed.

h. *Annex H*. (*Safety*). This annex establishes minimum essential safety guidance for commanders and units. It includes risk assessment (Appendix L), accident reporting, safety measures, emergency procedures, vehicle safety, ground guide procedures, fire prevention and protection, antennas, climate, survival training, animal and arthropods hazards, personal protective measures, hearing conservation, carbon monoxide poison, helicopter safety, and refueling operations.

i. *Annex I*. (*Civil-Military Operations*). This annex discusses the participation in civil-military operations (CMO). Medical elements are often involved in CMO, humanitarian assistance, and disaster relief operations. The activities which may be covered include providing—

- Direct support medical evacuation for the operation.
- Guidance on developing a medical evacuation system in a HN.
- Training to a HN's medical infrastructure.

j. *Annex J*. (*Mass Casualty Situations*). This annex discusses the procedures for providing medical evacuation support to mass casualty situations, to include coordination for nonmedical transportation assets and the augmentation of these assets with medical personnel to provide en route patient care. It discusses evacuation capabilities of US forces (Appendix Q).

k. *Annex K*. (*High-Capacity Air Ambulance Operations*). This annex discusses change of mission considerations and required procedures when the high capacity air ambulance is called into service.

l. *Annex L*. (*Minefield Operations*). This annex discusses notification procedures, training requirements, and techniques for clearing pathways to casualties, marking mines, and extracting personnel and equipment. (Extraction techniques are provided in paragraphs 8-9 and 8-10 of this manual.)

APPENDIX H

PATIENT REGULATING FORMS SAMPLE FORMAT

Section I. USE OF DD FORM 600, PATIENT'S BAGGAGE TAG

H-1. General

a. A DD Form 600, Patient's Baggage Tag, is prepared for and firmly affixed to each piece of baggage accompanying patients traveling by military common carrier. When a patient's journey is to be made in several stages, one tag serves throughout the entire trip, even though the patient may be moved by more than one common carrier. A copy of the patient's travel orders should also be placed inside each piece of baggage to ensure the prompt return of misdirected items. *Do not use DD Form 600 for baggage not moving aboard the train, aircraft, or vessel with the patient.* Such items are moved as ordinary unaccompanied baggage, in accordance with applicable Service directives.

b. The classification for patients being aeromedically evacuated is contained in Appendix K.

H-2. Preparation of DD Form 600

The OMF completes DD Form 600 (Figure H-1) and firmly attaches it to each piece of baggage accompanying the patient. All items except the *thru* block (which is en route staging facilities should be completed, prior to arriving at the MASF.

NOTE

For HCAA operations, if the OMF (a FSMC or MSMC) does not have this form available, the form will be completed by the MASF.

H-3. Receipt for Checked Baggage

Detach the patient's stub from the DD Form 600 and give it to the patient as his receipt for checked baggage. If the patient is unable to safeguard the stub, give it to the senior medical attendant accompanying the patient. As accompanying medical personnel are relieved, the patient's stub is turned over to the succeeding senior medical attendant. At the destination terminal, the accompanying medical attendant delivers the stub to the representative of the destination hospital accepting the delivery of the patient.

H-4. Disposition of DD Form 600

The Patient's Baggage Tag and accompanying stub may be destroyed when baggage is returned to the patient or the DD Form 600 is replaced by a local baggage tag and stub at the destination hospital.

U.S. GOV'T PRINTING OFF. 1983-416-719

DD FORM 600
1 JUL 73

REPLACES EDITION OF 1 OCT 51 WHICH MAY BE USED

PATIENT'S BAGGAGE TAG (DO NOT DETACH)	NO Q 754698
ORIGINATING CARRIER 123rd MED Co. (AIR AMB)	
PATIENT (Last name-First name-Middle initial) DOE, JOHN J.	
GRADE CPL	SSN 080-80-0088
FROM	
ORIGINATING MEDICAL FACILITY C/504th Sup BN	ORIGINATING TERMINAL FL 12314562
THRU	
SAMPLE	
TO	
DESTINATION HOSPITAL 138th CSH	TERMINAL GL 11508133

PATIENT'S STUB	NO Q754698
ORIGINATING CARRIER 123rd MED CO. (AIR AMB)	
PATIENT (Last name-First name-Middle initial) DOE, JOHN J.	
GRADE CPL	SSN 080-80-0088

Figure E-1. Sample DD Form 600.

Figure H-1. Sample DD Form 600.

Section II. USE OF DD FORM 601, PATIENT EVACUATION MANIFEST

H-5. General

A DD Form 601 is prepared for each patient to be transferred. All patients destined for the same off-load terminal may be listed on the same manifest form. The off-load terminal may not be the patient's final destination. For example, the patient is evacuated by ground to a CSH. However, due to the seriousness of his condition, he is evacuated by air from the CSH to a GH in the EAC. Medical treatment facilities must maintain close liaison with local support elements or medical evacuation battalions to ensure proper coordination with corps is affected. Support elements may waive the requirements for preparation of DD Form 601 providing the support element prepares an adequate patient manifest and furnishes copies to the originating and destination MTFs.

H-6. Preparation of DD Form 601

The OMF prepares DD Form 601. The required number of copies is determined locally and should be included in the unit SOP. Complete this form in accordance with the directions contained on the form and the following instructions:

NOTE

For HCAA operations, if the OMF (a FSMC or MSMC) does not have this form available, the form will be completed by the MASF.

a. Number manifests by Julian date with a number consisting of the last digit of the calendar year and the serial number of the manifest on that day and separated by a hyphen. For example, the tenth manifest issued on 19 December 1989 is numbered "9353-10" with the "9" being the last digit of the calendar year, the "353" being the Julian date for that day, and the "10" representing the number of manifests prepared so far on that day.

b. All attendants (medical and nonmedical) are identified on the DD Form 601 directly following the information on the patient they are attending. If the en route medical care and surveillance is being done by only one individual, his name and information should be included after the last patient entry. Do not list the patient's attendant as an emergency addressee.

c. Enter the term "Prisoner" below the name of the OMF for patients in a prisoner status.

d. Enter the words "Under Investigation" to identify patients who are under investigation, but not formally charged with a serious crime.

e. Enter the term "DA" to identify patients with a history of drug abuse.

f. When necessary, deletions and changes should be initialed by the individual who signed the manifest. If a patient is listed on the manifest who cannot be moved, line out all entries pertaining to that patient and initial the change. See Figure H-2 for a sample DD Form 601.

SAMPLE FORMAT

PATIENT EVACUATION MANIFEST	MANIFEST NO. 9353-10	ESTIMATED TIME OF DEPARTURE AND DATE 1500 19 Dec 89	PAGE 1 OF 1 PAGES
MEDICAL FACILITY PREPARING MANIFEST C Co. 504th FSB		ORIGINATING TERMINAL C Co. 504th FSB	
In this column list for each patient the following items in the order indicated: NAME—GRADE—SERVICE—SERVICE NUMBER DIAGNOSIS—CLASS OF PATIENT FROM (*Medical facility*)—TO (*Hospital*)		In this column list for each patient the following items in the order indicated: EMERGENCY ADDRESSEE—RELATIONSHIP ADDRESS—TOWN AND STATE DESTINATION TERMINAL—BAGGAGE TAG NUMBERS	
DOUBLE SPACE BETWEEN PATIENTS' ENTRIES		DOUBLE SPACE BETWEEN PATIENTS' ENTRIES	
Doe, John J. CPL, USA 080-80-0088 GSW to head 2A FROM: C/504th Sup Bn TO: 138th CSH		NOK Mrs. Linda Doe (Wife) 4030 Commercial Ave. San Antonio, Texas DEST: 138th CSH TAG# Q754698	
Doeski, Herman A. SGT 01234-03 GSW to lower abdomen 2A FROM: C/504th Sup Bn "PRISONER" TO: 138th CSH		NOK Mr. Henry H. Doeski (Father) 123 Ramblewood Dr. Corpus Christi, Texas DEST: 138th CSH TAG# Q754697	
Jones, John R. PFC, USA 173-24-5621 5B FROM: C/504th Sup Bn "DA" TO: 138th CSH		NOK Ms. Susan L. Jones (Sister) 333 Main Street Athens, Georgia DEST: 138th CSH TAG# Q754699	
Lopez, Jasinto P. SPC, USA 002-00-8800 6B FROM: C/504th Sup Bn TO: 138th CSH		NOK Mrs. Celia Hernandez (Mother) 261 Castle Drive San Diego, California DEST: 138th CSH TAG# Q754696	

CARRIER	FLIGHT NO.	TRIP	TRIP NO.	VOYAGE NO.	SIGNATURE

DD FORM 1 OCT 51 601

16—68670—1 U.S. GOVERNMENT PRINTING OFFICE

Figure H-2. Sample DD Form 601.

H-7. Disposition of DD Form 601

At the loading point give the DD Form 601 to the senior medical person present. He will check all patients and baggage listed on the manifest. He will note any changes and return a signed copy acknowledging receipt for all manifested patients and baggage. The OMF retains the signed copy of the form for 12 months, after which it may be destroyed.

Section III. USE OF DD FORM 602, PATIENT EVACUATION TAG

This paragraph implements NATO STANAG 2132.

H-8. General

a. Department of Defense Form 602 is the patient's in-transit medical record. The attending physician prescribes en route medical care requirements on this form before the patient departs the OMF, and all en route treatments are noted on the form during the patient's journey. The tag consists of the "Ship's Record Office Tab," the "Embarkation Tab," and the "Debarkation Tab." Only the basic tag is normally required. The "Embarkation Tab" and "Debarkation Tab" may be completed and used locally.

b. All patients must wear a patient identification band while in the USAF AE system. This is not required by the Army evacuation system.

H-9. Preparation of DD Form 602

The OMF prepares DD Form 602 (Figures H-3 and H-4), entering all pertinent information except "Cabin or Compartment No." and "Bunk No." This information, when required, is entered by the medical attendant. If a battle casualty does not have a DD Form 1380 attached when picked up, the medical attendant will initiate a DD Form 602 and attach it to the patient. If a patient's journey is in several stages, en route ASFs use the original tag for recording pertinent medical data and forward it with the patient when he departs for the next leg of his journey.

a. Enter all diagnoses, including only such detail as is useful in caring for the patient during his journey.

b. In the "Diagnosis" section, enter in red pencil the terms:

(1) "Prisoner" for patients in a prisoner status.

(2) "Under Investigation" for patients who are under investigation (but not formally charged) for a serious crime.

(3) "DA" for patients with a history of drug abuse.

c. Check the space "Battle Casualty" only if the patient actually falls into this category as defined in governing regulations of his Service. Patients who are not battle casualties, but under treatment primarily for nonbattle wounds or other injuries are classed as "Injury."

d. Enter the same baggage tag numbers as shown on DD Form 600.

e. Enter treatment recommended en route in the space provided. En route medication, with dosage as prescribed by the attending physician, must be recorded in this section. If a patient requires tube feeding, a copy of the tube feeding formula must be attached to DD Form 602 to ensure that he receives the same tube feeding throughout his journey.

H-10. Continued Use of DD Form 602

a. While in the AE system, the medical personnel providing en route medical care use the reverse side of the form to note patient examinations and treatments, where such information is not sufficient to justify opening the patient's clinical record. Further, treatments administered at en route MTFs or ASFs are also annotated. All treatment entries include the time that the actual treatment was administered. This entry must be recorded in Greenwich mean time and indicated by use of the suffix "Z."

b. At all intermediate stops prior to arrival at the destination MTF, the name of the facility and the dates of the patient's arrival and departure are annotated, such as Letterman Army Medical Center, 7 Feb—9 Feb 89.

H-11. Disposition of DD Form 602

The destination hospital staples the basic tag of DD Form 602 to the Standard Form (SF) 602 in the patient's health record. The "Embarkation Tab" and "Debarkation Tab" may be retained by the AE unit or disposed of locally.

DD FORM 1 FEB 63 602

REPLACES DD FORM 602, 1 OCT 51
PREVIOUS EDITIONS ARE OBSOLETE
REMPLACE DD FORM 602, 1er OCTOBRE 1951
LES EDITIONS PRECEDENTS SONT CADUQUES

SAMPLE FORMAT

PATIENT EVACUATION TAG—FICHE D'ÉVACUATION DE PATIENT
(Tie this tag to patient – Attacher cette fiche au patient)

FROM (Medical treatment facility)
ORIGINE (Installation de traitement médical)
C/504th SUP BN

NAME (Last–first–middle initial)
NOM (Nom de famille–premier prénom–initiale deuxième prénom)
DOE, JOHN J

SERVICE NUMBER NUMÉRO MATRICULE	RANK/RATING/GRADE GRADE	CATEGORY OF PERSONNEL (Service or employer and nationality) CATÉGORIE DE PERSONNEL (Service ou employeur et nationalité)
080-80-0088	CPL	USA

DIAGNOSIS
DIAGNOSTIC 8739 GSW to head

CLASS—CLASSE		DISEASE MALADIE	BATTLE CASUALTY BLESSÉ AU COMBAT	INJURY BLESSURE
1A	2A X		XX	
1B	2B			
1C		CABIN OR COMPARTMENT NO. NO. CABINE OU COMPARTIMENT		BUNK NUMBER NUMÉRO COUCHETTE
3	4			

VSI
TRÈS GRAV. MAL.
☐ Yes Oui ☐ No Non

BAGGAGE TAG NUMBER(S)
NUMÉROS ÉTIQUETTES BAGAGE Q754698

DESTINATION
DESTINATION 138th CSH

SHIP/AC (Number/type)
NAVIRE/AVION (Matricule/type)

TREATMENT RECOMMENDED EN ROUTE (If no treatment is required a notation to this effect is made)
TRAITEMENT RECOMMANDÉ EN ROUTE (Indiquer si aucun traitement n'est nécessaire)
MONITOR CASUALTY, START IV ONLY IF BLOOD PRESSURE IS DECREASING, RINGER'S LACTATE AT A TKO RATE.

SIGNATURE OF MEDICAL OFFICER
SIGNATURE DU MÉDECIN
s/ CHARLTON HESTON, MAJ, MC

DATE
DATE
19 DEC 89

REGULAR DIET RÉGIME NORMAL	SPECIAL DIET (Describe) RÉGIME SPÉCIAL (Description)
	NPO

SHIP'S RECORD OFFICE TAB—FICHE POUR ARCHIVES TRANSPORTS

FROM (Medical treatment facility)
ORIGINE (Installation de traitement médical) C/504th SUP BN

NAME (Last–first–middle initial)
NOM (Nom de famille–premier prénom–initiale deuxième prénom)
DOE, JOHN J.

SERVICE NUMBER NUMÉRO MATRICULE	RANK/RATING/GRADE GRADE	CATEGORY OF PERSONNEL CATÉGORIE DE PERSONNEL
080-80-0088	CPL	USA

BAGGAGE TAG NUMBER(S) NUMEROS ÉTIQUETTES BAGAGES	DATE OF SHIPMENT DATE DÉPART
Q754698	19 DECEMBER 1989
DESTINATION DESTINATION 138th CSH	ARRIVAL DATE DATE ARRIVÉE

EMBARKATION TAB—FICHE D'EMBARQUEMENT

Figure H-3. Sample DD Form 602 (front side).

SAMPLE FORMAT

TREATMENT AND PROGRESS REPORT
TRAITEMENT ET EVOLUTION DE LA CONDITION.

VITAL SIGNS:
T 96.2°F (A)
P 104
R 10
BP 88/60

SIGNATURE SIGNATURE	DATE DATE
D. Jones, SSG, 91B	19 DEC 89

(DO NOT WRITE BELOW PERFORATION)
(NE PAS ECRIRE AU-DESSOUS DE LA PERFORATION)

Figure H-4. Sample DD Form 602 (back side).

APPENDIX I

SAMPLE FORMAT FOR MEDICAL EVACUATION MISSION COMPLETION RECORD

Once the medical evacuation mission is completed, an after-action record of this mission should be maintained. The information contained in this sample record provides historical data and lessons-learned information. This information can be used as a management tool for ensuring that medical evacuation missions are properly equipped and performed in a timely manner. Further, the record provides information on the patient's condition and procedures accomplished which may have a bearing on either administrative or legal proceedings. The sample format depicted in Table I-1 may be revised to meet the needs of the command and included in the unit TSOP.

Table I-1. Medical Evacuation Request and Mission Completion Record

SAMPLE FORMAT

MEDICAL EVACUATION REQUEST/AFTER-ACTION RECORD				
DTG RECEIVED	CALL SIGN	AIR/GROUND	UNIT MISSION/MISSION NUMBER	
ITEM	CLEAR/DECRYPTED	ENCRYPTED	BREVITY CODE	ACTUAL INFORMATION
1 LOCATION OF PICKUP SITE				
2 FREQUENCY/ CALL SIGN SUFFIX AT PICKUP SITE				
3 NUMBER OF PATIENTS BY PRECEDENCE			A—URGENT B—URGENT-SURG C—PRIORITY D—ROUTINE E—CONVENIENCE	
4 SPECIAL EQUIPMENT			A—NONE B—HOIST C—EXTRACTION EQUIPMENT D—VENTILATOR	
5 NUMBER OF PATIENTS BY TYPE			L + # OF PNT—LITTER A + # OF PNT—AMBULATORY (SITTING)	
6 SECURITY OF PICKUP SITE*			N—NO ENEMY TROOPS P—POSSIBLE ENEMY TROOPS (CAUTION) E—ENEMY TROOPS IN AREA (CAUTION) X—ENEMY TROOPS IN AREA (ARMED ESCORT REQUIRED)	
7 METHOD OF MARKING PICKUP SITE			A—PANELS B—PYROTECHNIC SIGNAL C—SMOKE SIGNAL D—NONE E—OTHER	
8 PATIENT NATIONALITY AND STATUS			A—US MILITARY B—US CIVILIAN C—NON-US MILITARY D—NON-US CIVILIAN E—EPW	
9 NBC CONTAMINATION*			N—NUCLEAR B—BIOLOGICAL C—CHEMICAL	
NEAREST AXP	DESTINATION MTF		DEST FREQ/CALL SIGN	ETE

NOTES:
(EXPLAIN DELAYS)
(LIST MSRs OR AIR CORRIDORS)
(LIST EXCHANGE REQUIREMENTS)
*WARTIME

Table I-1. Medical Evacuation Request amd Mission Completion Record (Continued)

SAMPLE FORMAT

DTG REQUEST RECEIVED BY EVACUATION UNIT	DTG REQUEST RECEIVED BY EVACUATION CREW	EVAC VEHICLE/AIRCRAFT DESIGNATION (BUMPER NUMBER/AIRCRAFT NUMBER)
DTG ARRIVED AT PICKUP SITE	DTG DEPARTED PICKUP SITE	EVACUATION ORGANIZATION
DTG ARRIVED AT MTF 1	DESIGNATION OF MTF 1	LOCATION OF MTF 1
DTG ARRIVED AT MTF 2	DESIGNATION OF MTF 2	LOCATION OF MTF 2
DTG ARRIVED AT MTF 3	DESIGNATION OF MTF 3	LOCATION OF MTF 3
DTG ARRIVED AT MTF 4	DESIGNATION OF MTF 4	LOCATION OF MTF 4

PATIENT DATA NAME	RANK	SSN/ID NUMBER	UNIT	MTF EVACUATED TO

MISSION NARRATIVE: CHRONOLOGICALLY COVER AS MUCH INFORMATION AS IS AVAILABLE.

EVACUATION CREW: INDIVIDUAL IN CHARGE:	SIGNATURE OF INDIVIDUAL IN CHARGE:
PILOT/DRIVER:	
MEDIC:	
CREW CHIEF:	

CONTINUATION OF INFORMATION:

APPENDIX J

PROCEDURES FOR LITTER EVACUATION TRAINING

J-1. General

To safely transport a patient by litter and to ensure litter bearers are not injured by using incorrect lifting procedures, training is required for litter bearers. This appendix provides the techniques and procedures necessary to accomplish litter evacuation.

J-2. Basic Guides for Training Litter Bearers

Litter bearers are normally grouped into squads of four to carry patients. For this reason, litter procedures for squads of four are effective in training individuals to be litter bearers. The following guidelines promote uniformity and accuracy in training methods:

- Several squads may be trained at the same time by one individual, or each squad may be instructed separately by an instructor or trained squad leader.

- For the initial training procedures, a litter without a patient on it can be used to simulate a loaded litter.

- For later training, some personnel can be designated as *patients*. These individuals should be frequently rotated with the ones carrying the litters so that all may participate in each phase of instruction.

- For more realistic training in the handling of the different types of injuries, *patients* may wear moulages, bandages, and splints to simulate actual wounds or injuries.

- The persons designated as *patients* may be positioned on the ground at suitable intervals near a line of litters, first with the head and later with the feet toward the litters. As the instruction progresses, their positions may be varied. Lastly, they may be dispersed or concealed to simulate positions that the wounded might occupy on a battlefield.

J-3. Litter Commands

Litter procedures are not to be considered precision drills; however, certain preparatory commands and commands of execution are used to facilitate instruction. A *preparatory command* states the movement or formation to be carried out and mentally prepares the individual for its execution. A *command of execution* tells when the command is to be carried out. For purposes of identification in the discussion of the different types of procedures, preparatory commands will be in lower case with initial capital letters and commands of execution will be in capital letters.

NOTE

The use of formal commands is for training and their use is not anticipated during combat operations.

J-4. Formation for Instruction

First, align the trainees into four ranks; then give the commands to form litter squads. This is accomplished as follows:

a. The trainees count off from front to rear, one through four, thus forming the litter squads and designating each trainee's position in the litter squad by number. Each number carries with it specific responsibilities in the litter squad. The trainee designated number 1 is the squad leader.

b. The squad leaders count off from right to left, designating a number for each litter squad.

c. The formation is then opened to provide each squad adequate space for performance.

d. Since exceptional circumstances may make it necessary to use two-bearer litter squads, the instruction should include procedures for these reduced squads, using bearers 2 and 3 of the four-bearer squad.

J-5. Procedures to Procure, Ground, Open, Close, and Return the Litter

a. *To Procure Litter*. Upon the command of Procure, LITTER, the squad leader (bearer number 1) steps forward, goes to the source of supply, picks up the litter, and returns to his original position covered by bearers numbers 2, 3, and 4.

(1) The closed litter is carried at high port except near helicopters where it is kept level with the ground to avoid contacting the rotor blades. At high port, the litter is carried diagonally across the body with the left wrist in front of the left shoulder and the right wrist near the right hip (Figure J-1).

(2) After bearer number 1 returns to his original position in the squad, he holds the litter in an upright position on his left side with the metal stirrups away from his body (Figure J-2).

b. *To Ground Litter*. Upon command of Ground, LITTER, bearer number 1 lowers the litter to the ground. With the litter squad in formation, bearer number 1 places his left foot beside the litter handles, steps forward with his right foot, and lowers the litter to the ground so that it rests on the stirrups (Figure J-3). Then upon command of Litter, POSTS, the other three bearers move into their positions at the sides of the litter. Bearer number 2 moves to the right front, bearer number 3 moves to the left rear, and bearer number 4 moves to the left front (Figure J-4).

c. *To Open Litter*. Upon command of Open, LITTER, all bearers face the litter and execute the command. With all bearers facing the litter, bearers numbers 2 and 3 pick up the litter from the ground and support it, while bearers numbers 1 and 4 unfasten the litter straps. (Figure J-5). Bearers numbers 2 and 3 extend the litter by pulling the handles apart with the canvas up. Then bearer number 2 lowers his end of the litter to the ground and bearer number 3 raises his end of the litter until it is in a vertical position. Using his foot, bearer number 3 extends the lower spreader bar into a locked position, reverses the litter, and extends the other spreader bar. Bearer number 3 then lowers the litter to the ground with the canvas in the up position (Figure J-6).

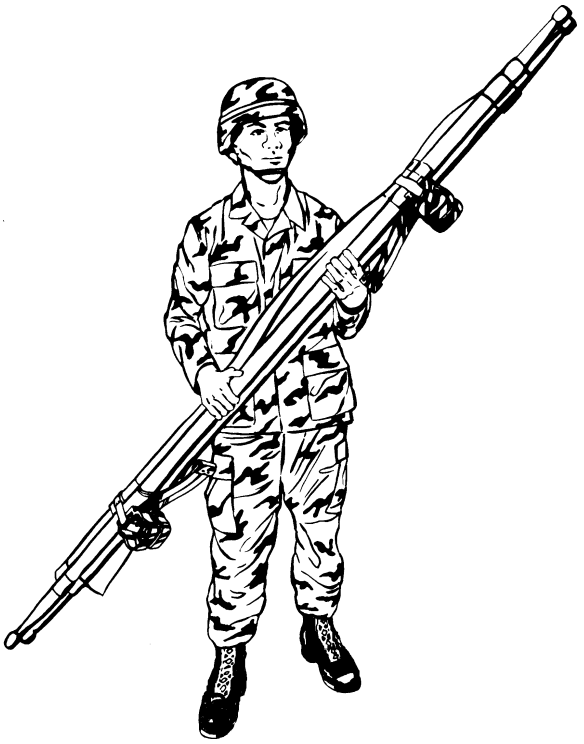

Figure J-1. Carrying litter at high port.

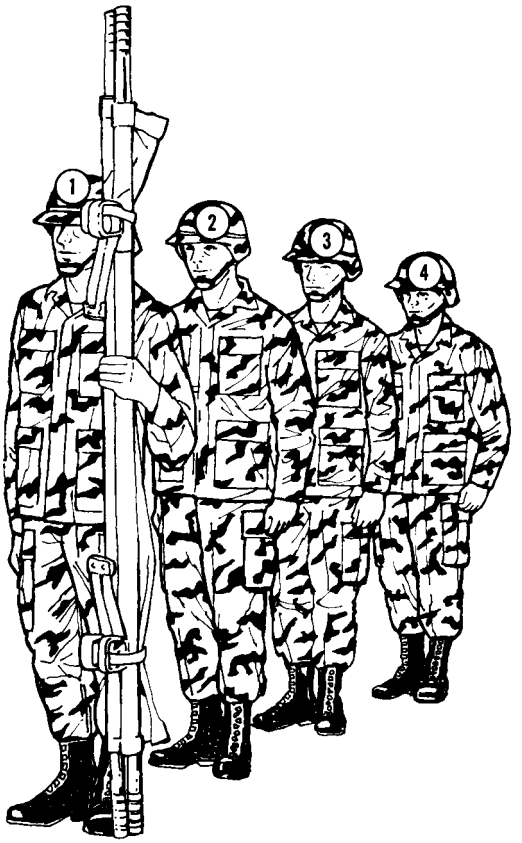

Figure J-2. Litter squad with litter.

Figure J-3. Grounding litter (step one).

Figure J-4. Grounding litter (step two) (position of Litter, POSTS).

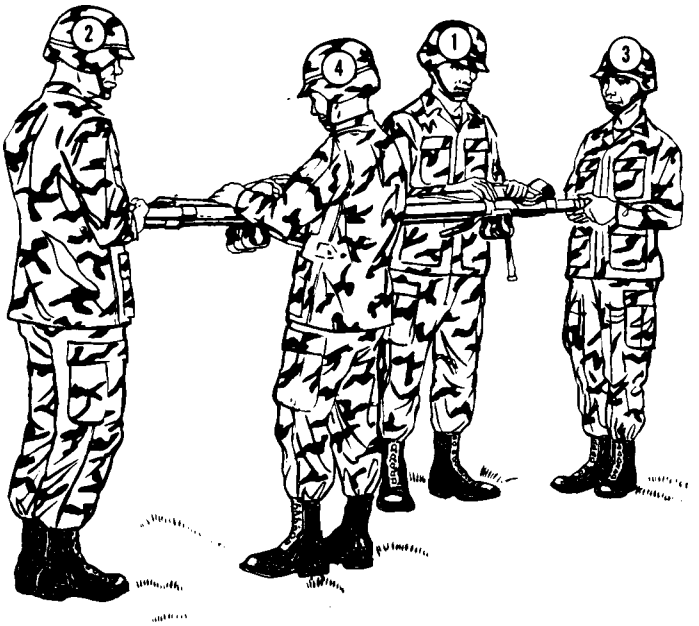

Figure J-5. Opening litter (step one).

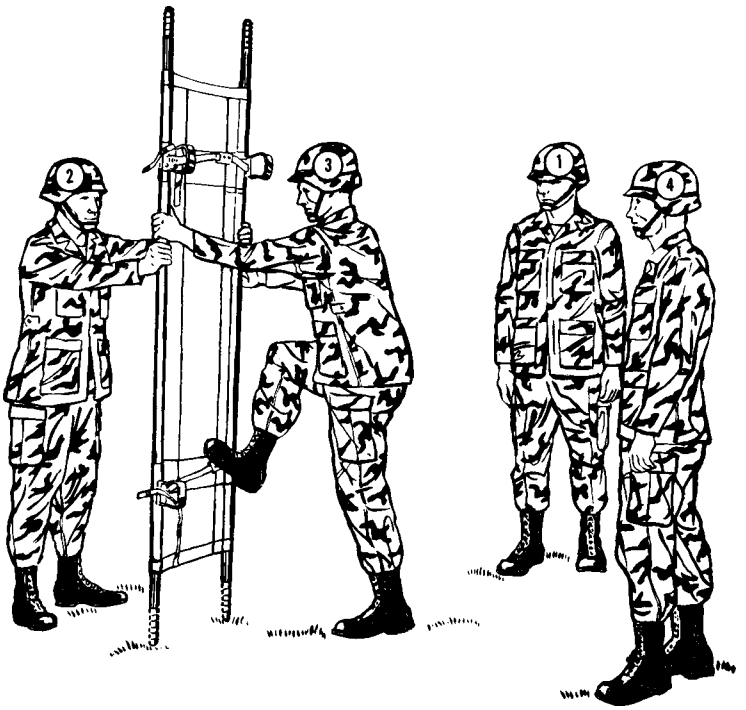

Figure J-6. Opening litter (step two).

d. To Close Litter. Upon command of Close, LITTER, bearer number 2 supports the litter while bearer number 3 releases the spreader bars and turns the bars against the litter poles. Bearers numbers 2 and 3 then lift the litter, move the poles together, and support the litter. Bearers numbers 1 and 4 fold the canvas smoothly on top of the poles and secure the canvas and the poles in place with the litter straps.

e. To Return Litter. At the completion of the instruction and upon command of Return, LITTER, bearer number 1 returns the litter to supply.

J-6. Procedures for Loading a Patient onto a Litter

After the patient has been located, the general nature of his wounds determined, emergency treatment given, and the litter opened and positioned, the bearers load the patient onto the litter.

a. To Load a Litter (*Four Bearers*). Upon the following commands, the bearers position themselves, lift the patient, position the litter, and lower the patient onto the litter:

(1) At the command, Right (Left) Side, POSTS, the bearers take the following positions facing the patient: bearer number 2 at the right (left) ankle; bearer number 3 at the right (left) shoulder; bearers numbers 4 and 1 at the right and left hips, respectively (Figure J-7).

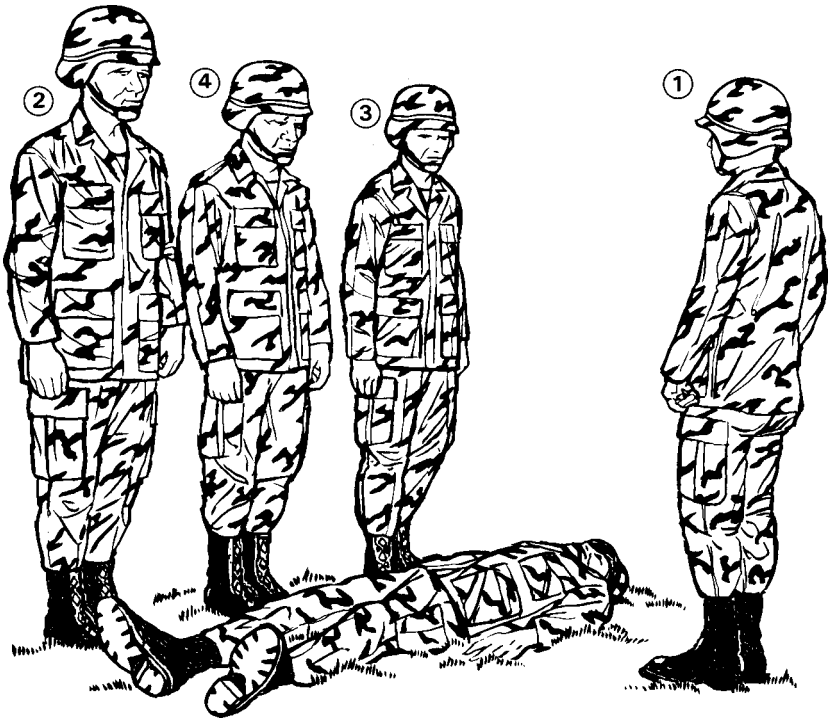

Figure J-7. Squad at right side, POSTS.

(2) At the command, Lift, PATIENT, each bearer kneels on his knee that is nearest the patient's feet. Bearer number 2 passes his forearms under the patient's legs, carefully supporting any fracture, if required. Bearers numbers 1 and 4 place their arms under the small of the patient's back and thighs without locking hands. Bearer number 3 passes one hand under the patient's neck to the farther armpit and uses the other hand to support the nearer shoulder. All bearers lift the patient slowly and carefully and place him upon the knees of the three bearers who are on the same side (Figure J-8).

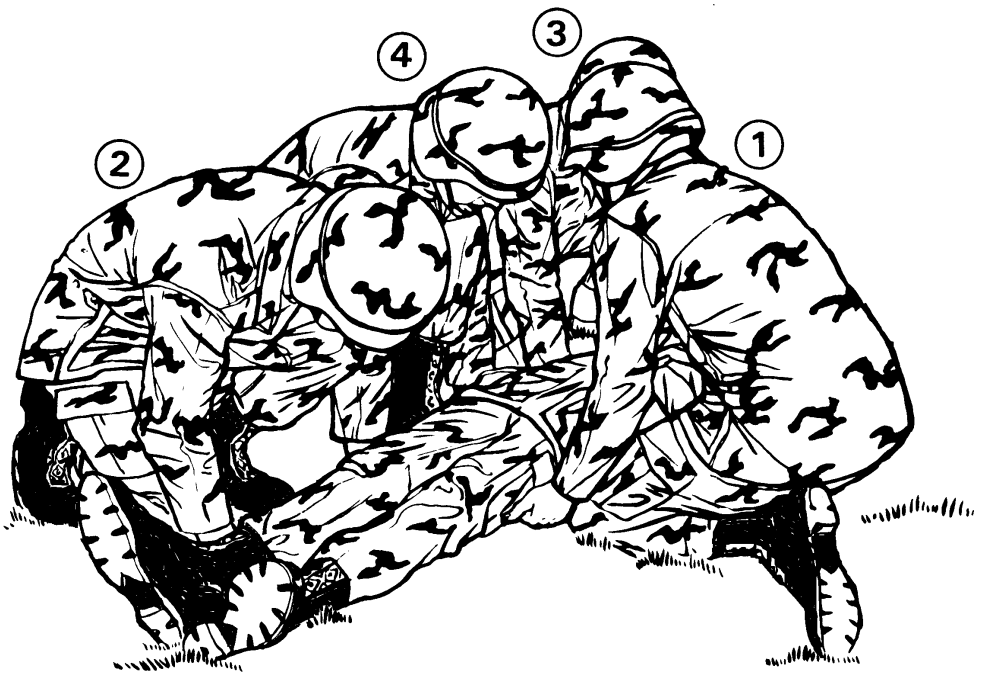

Figure J-8. Lifting patient to load litter (*step one*).

(3) At the preparatory command Lower, bearer number 1 resumes his former kneeling position opposite the other three bearers and prepares to assist in lowering the patient. As soon as the patient is firmly supported on the knees of the three bearers, the bearer on the opposite side (bearer number 1) relinquishes his hold and reaches for the litter (Figure J-9). He places the litter under the patient and against the ankles of the other bearers. At the command of execution, PATIENT, the patient is lowered gently onto the litter (Figure J-10). Without further orders, all bearers rise and resume their positions at Litter, POST.

b. To Load Litter (*Three Bearers*). In the absence of one man from the litter squad, bearers numbers 2 and 3 with the assistance of bearer number 1, lift the patient and lower him onto the litter. To lift the patient with three bearers, bearer number 2 places his arms under the legs and thighs of the patient. Bearer number 3 places his arms under the small of the back and shoulders of the patient. Bearer number 1,

on the opposite side of the litter, places his arms under the patient's knees and back. The patient is supported on the knees of bearers numbers 2 and 3, while bearer number 1 places the litter in position (Figure J-11). All three bearers lower the patient onto the litter (Figure J-12). The procedures are performed upon the commands cited in paragraph *a* above.

Figure J-9. Lifting patient to load litter (*step two*).

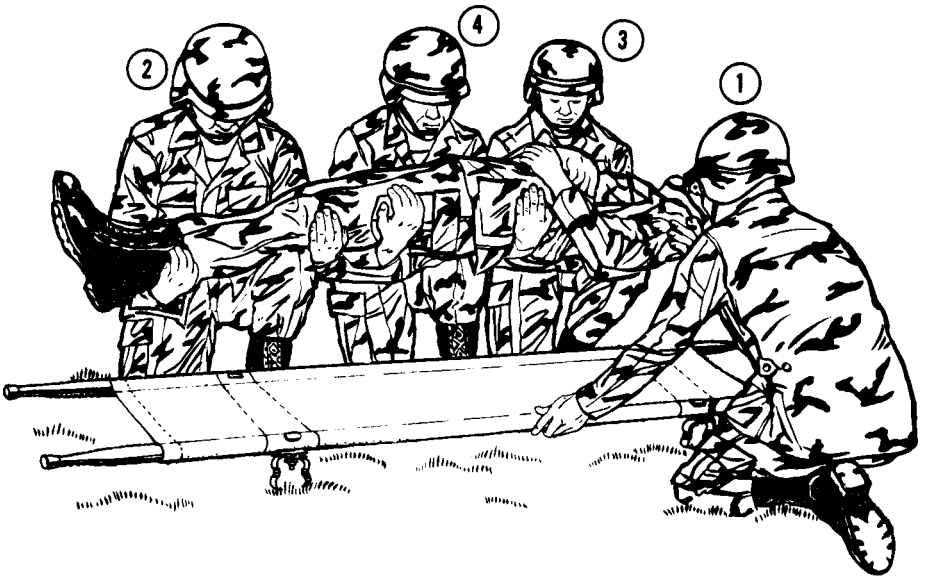

Figure J-10. Lifting patient to load litter (*step three*).

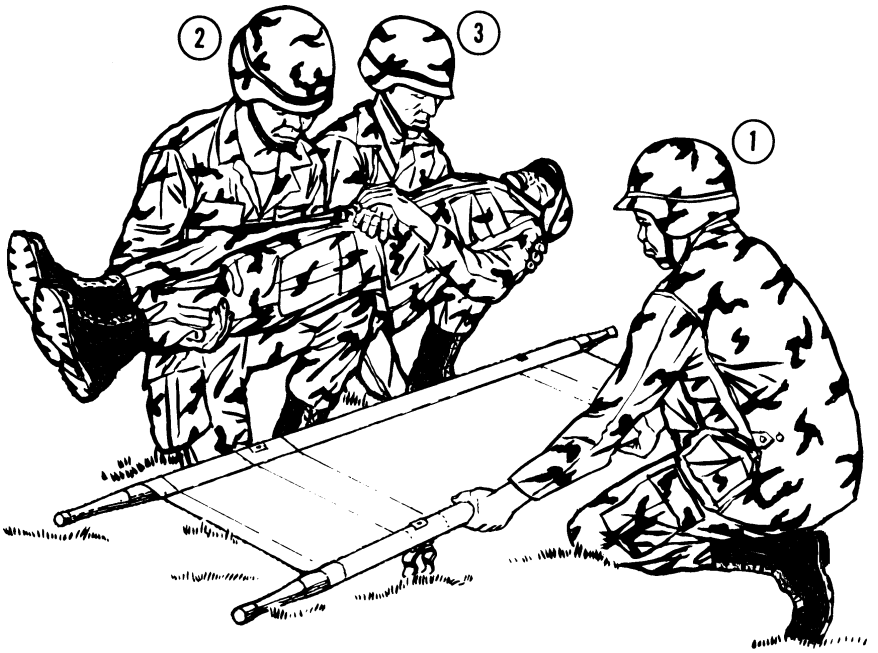

Figure J-11. Lifting patient to load litter (three bearers).

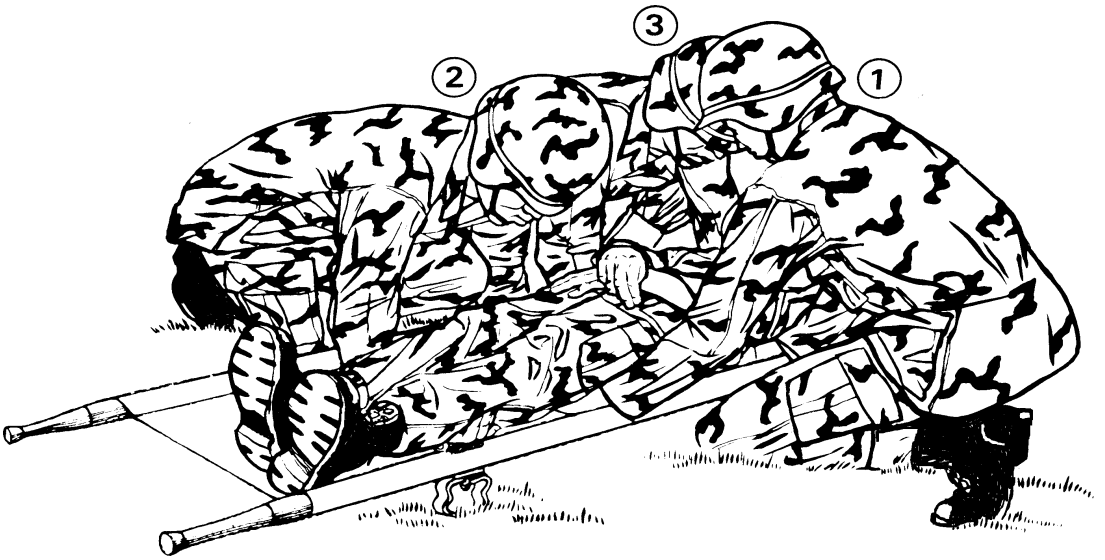

Figure J-12. Lowering patient onto litter (three bearers).

c. To Load Litter (*Two Bearers*). The procedures for loading litters with the two bearers on the same side are illustrated in Figures J-13 through J-16.

(1) At the command to Right Side, POSTS, bearers numbers 1 and 2 take positions at the patient's right thigh and shoulder, respectively (Figure J-13).

Figure J-13. Two bearers at right side, POSTS.

(2) At the preparatory command, Lift, each bearer kneels on his knee nearer the patient's feet. Bearer number 1 passes his arms beneath the patient's hips and knees. Bearer number 2 passes his arms beneath the small of the patient's back (Figure J-14).

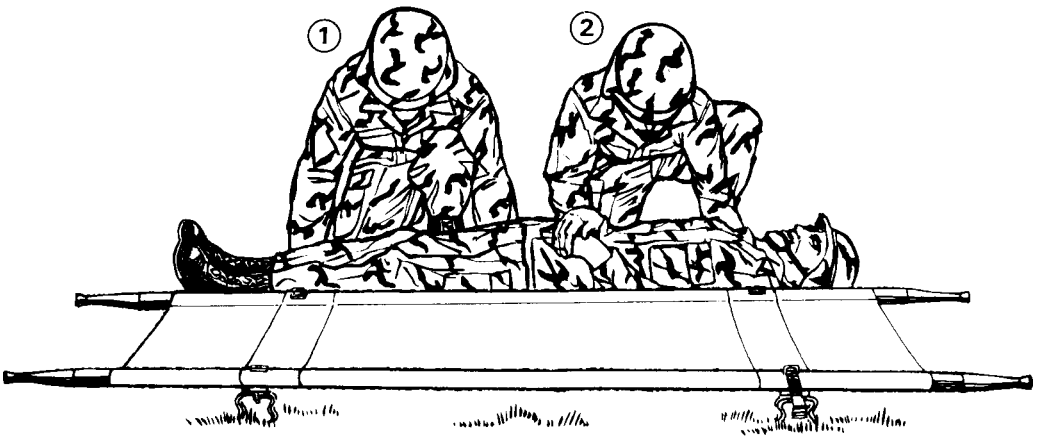

Figure J-14. Lifting patient with two bearers on the same side (*step one*).

(3) At the command of execution, PATIENT, the bearers lift together, raising the patient upon their knees. Readjusting their hold, they rise to their feet and move as close as possible to the side of the litter (Figure J-15).

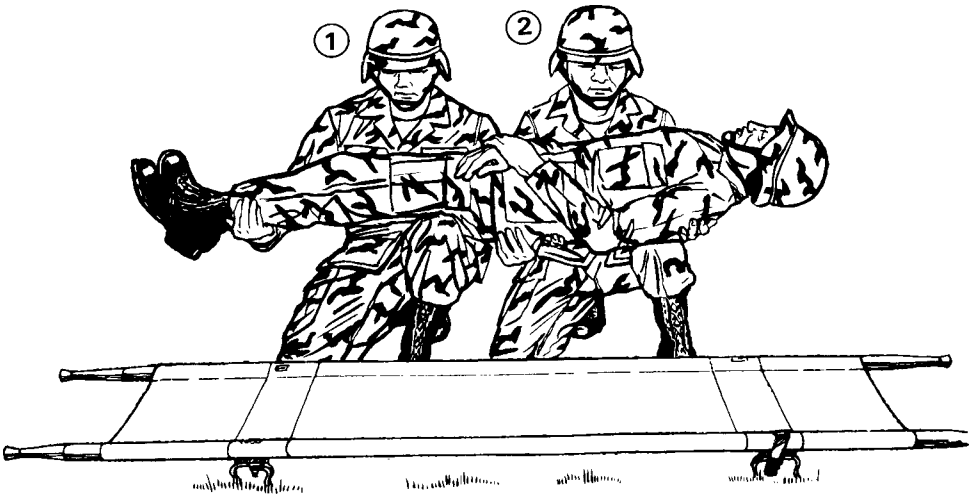

Figure J-15. Lifting patient with two bearers on the same side (step two).

(4) At the preparatory command, Lower, the bearers kneel and place the patient on their knees. At the command of execution, PATIENT, the bearers gently place the patient onto the litter (Figure J-16). They then rise and resume the position of Litter, POSTS, without command.

Figure J-16. Lowering patient onto litter with two bearers on the same side.

d. To Load Litter with Conscious Patient (*Two Bearers*). If the patient is conscious and able to hold onto the bearers, the following procedure is used:

(1) At the command, On Each Side, POSTS, bearers numbers 1 and 2 face the patient and take positions at the patient's right and left hips, respectively (Figure J-17).

Figure J-17. Two bearers, one on each side, POSTS.

(2) At the command of execution, PATIENT, the bearers lift the patient, both rising together, and carry him to the center of the litter (Figures J-18 and J-19).

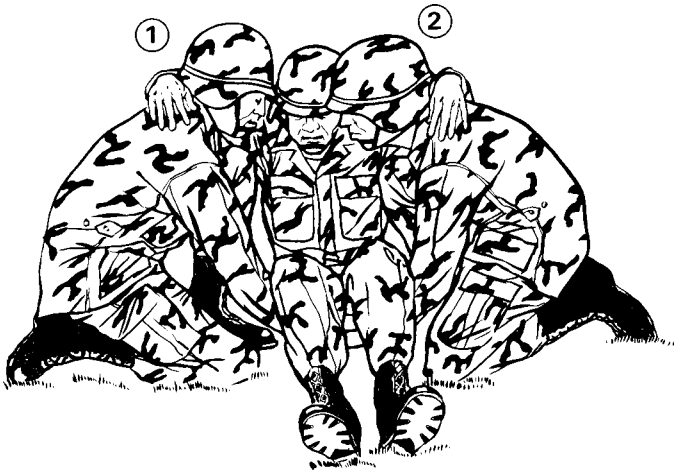

Figure J-18. Lifting patient with two bearers, one on each side (*step one*).

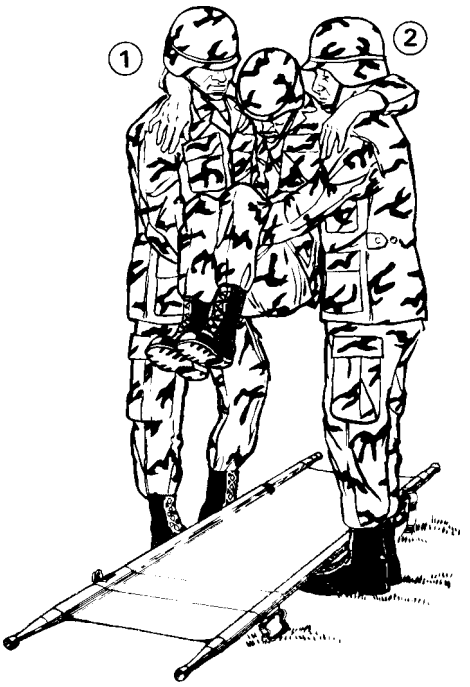

Figure J-19. Lifting patient with two bearers, one on each side (*step two*).

(3) At the command, Lower, PATIENT, the bearers stoop and lower the patient onto the litter in a sitting position. The patient then releases his hold on the bearers' necks. Both bearers assist the patient to lie down. They then resume the position of Litter, POSTS, without commands (Figure J-20).

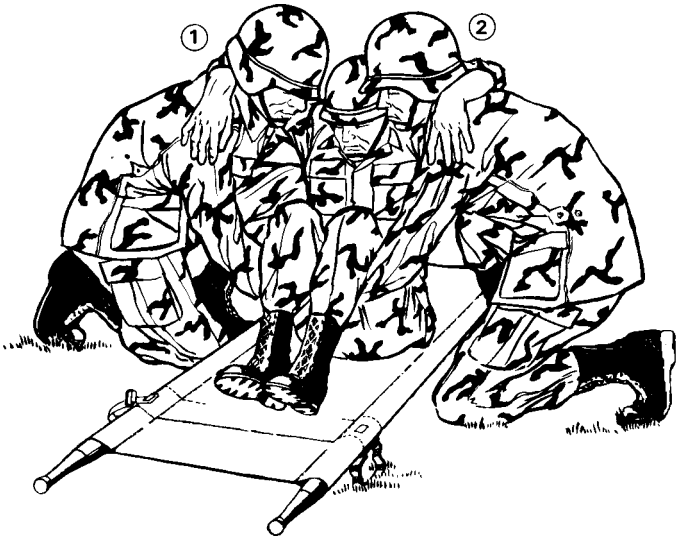

Figure J-20. Lowering patient onto litter (*two bearers, one on each side*).

e. To Load Patient with Back Injury. To avoid aggravating the condition of a patient with an actual or suspected back injury, the bearers proceed as follows (Figure J-21):

(1) Each bearer kneels on his knee nearer the patient's feet. (If the patient is unable to hold his arms in front of him, his wrists should be tied loosely before placing him on the litter. This will prevent injury to his arms.)

(2) Bearer number 1 places a blanket, coat, or jacket in a firm roll or in a position to support the arch of the patient's back. Bearer number 3 places one hand under the patient's head and the other hand under his shoulders. Bearer number 4 places his hands under the small of the back and buttocks. Bearer number 2 places his hands under the thighs and calves. Bearer number 1 assists bearer number 4 in supporting the small of the patient's back.

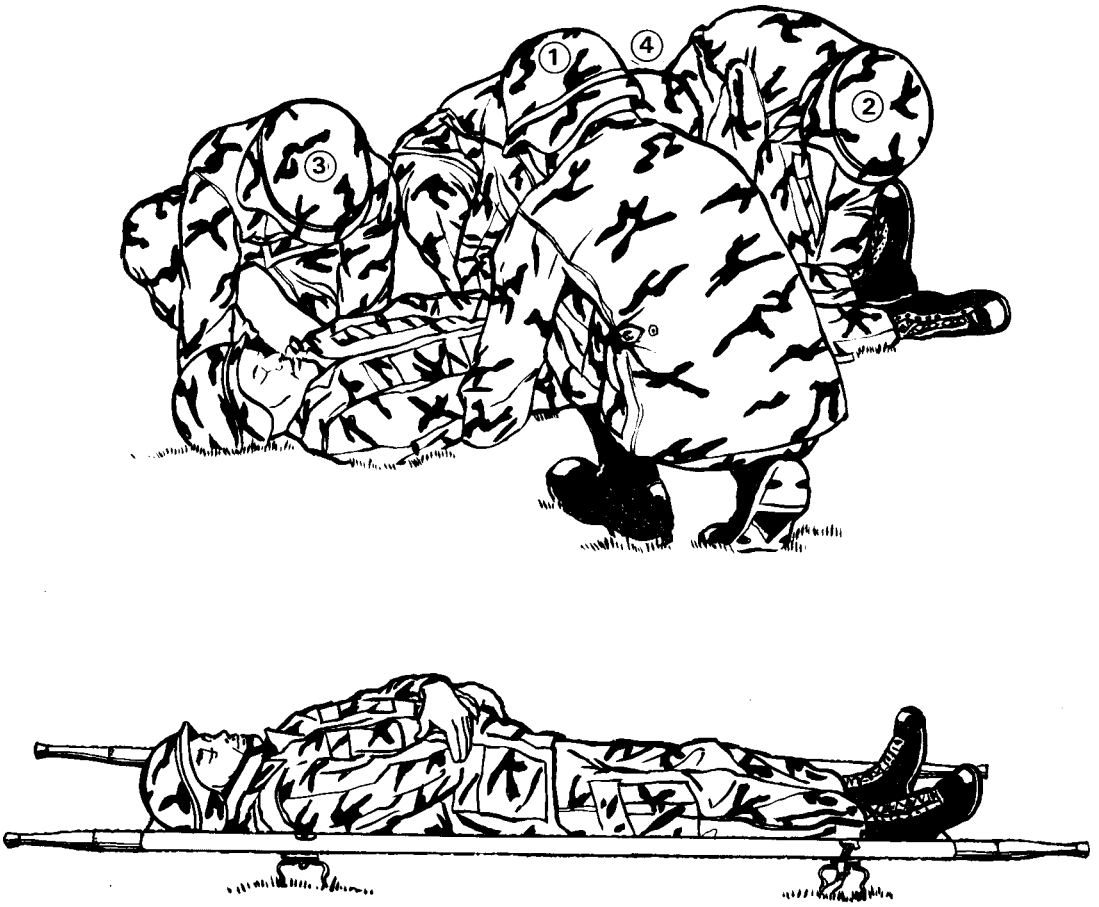

Figure J-21. Lifting patient with back injury.

(3) At the command, Lift, PATIENT, all bearers gently lift the patient off the ground about 8 inches. Bearers ensure that proper alignment is maintained. Bearer number 1 places the litter under the patient and adjusts the roll under the patient's back.

(4) At the command, Lower, PATIENT, the three bearers lean forward and with the aid of bearer number 1, lower the patient onto the litter.

J-7. Procedures for Carrying a Loaded Litter

After the patient has been loaded onto the litter, the litter is lifted and carried as described below.

a. To Lift Loaded Litter. Resuming the position of Litter, POSTS, and facing in the direction of travel, the bearers lift the loaded litter upon the command Prepare to Lift, LIFT (Figure J-22).

(1) At the preparatory command, Prepare to Lift, each bearer kneels on his knee closest to the litter. He grasps the litter handle with the hand nearest the litter and places his other hand on his raised knee.

(2) At the command of execution, LIFT, all bearers rise together keeping the litter level. When lifting, bearers should use leg muscles, not their back muscles.

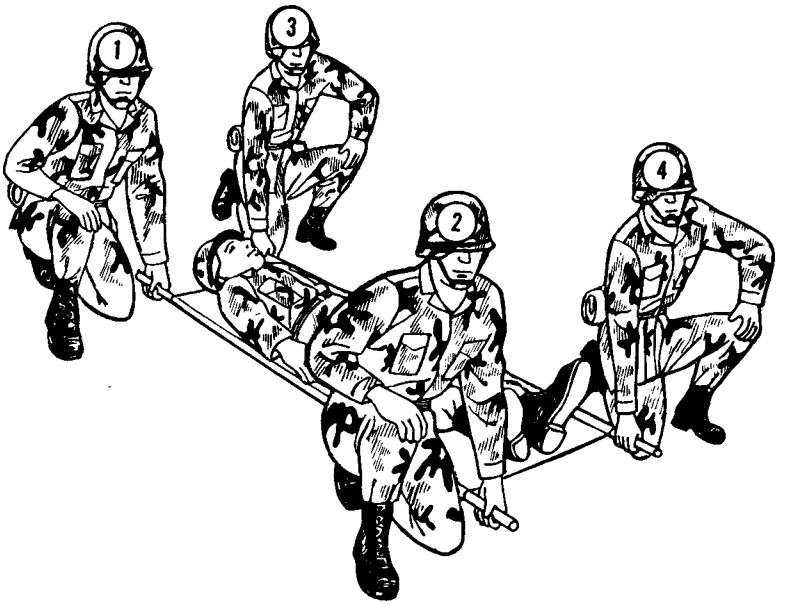

Figure J-22. Lifting the loaded litter.

b. To Carry a Loaded Litter. The type of carry used in transporting a litter patient depends upon the type of terrain as well as the obstacles involved. It may be necessary to use several types of carries.

(1) After the bearers lift the loaded litter, they are in position for the four-man carry (Figure J-23) which is used when the terrain is smooth and level. The command to proceed is Four-Man Carry, MOVE. With modifications, this carry is also used to pass under low obstacles.

(2) The command Two-Man Carry, MOVE, is given to enable the litter squad in a four-man carry to pass through or over narrow passages such as trails, bridges, gangplanks, and catwalks (Figure J-24). After the litter bearers reach the end of such passages, they change back to the four-man carry. With modification, this carry can also be used to pass through such obstacles as culverts or tunnels. Both bearers carrying the litter face the patient and crawl on their knees through these obstacles. This requires one bearer to crawl backwards.

(*a*) With the litter squad in the position of the four-man carry, the preparatory command, Two-Man Carry, is given. Bearers numbers 2 and 3 change their holds on the litter handles to the other hand, step between the handles, and take the full support of the litter as bearers numbers 1 and 4 release their holds.

(*b*) Bearer number 1 steps one pace in front of the squad to lead, and bearer number 4 falls one pace to the rear to follow.

Figure J-23. Four-man carry for smooth, level terrain.

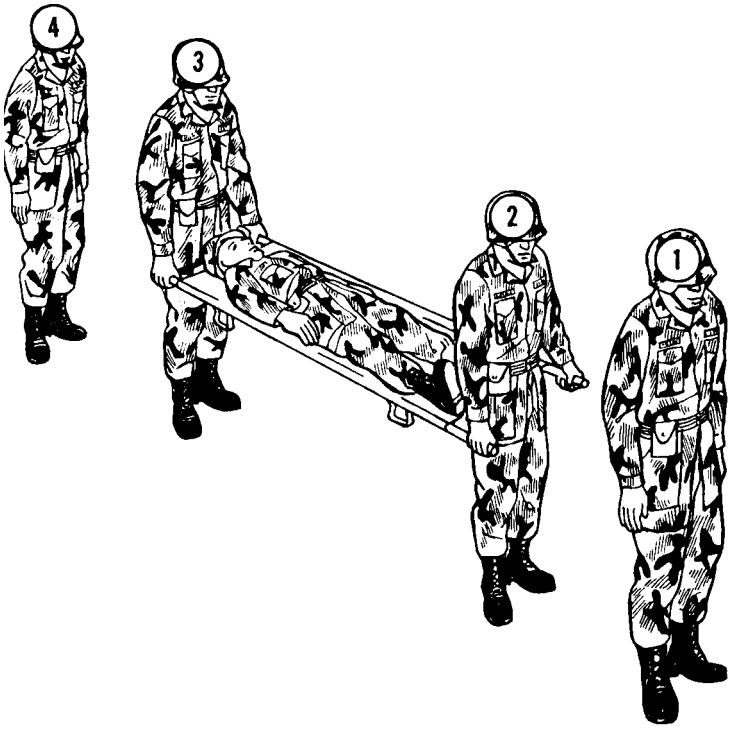

Figure J-24. Two-man carry for narrow trails and passages.

(*c*) At the command of execution, MOVE, the four bearers proceed through the passage.

(3) The command Litter Post Carry, MOVE, is given to enable the litter squad in a four-man carry to move over rough terrain (Figure J-25).

(*a*) With the litter squad in position of the four-man carry, the preparatory command, Litter Post Carry, is given. Bearers numbers 2 and 3 step between the handles of the litter and take hold of the handles. Bearers numbers 1 and 4 then release their holds.

(*b*) Bearers numbers 1 and 4 move to the sides of the litter and grasp the litter poles.

(*c*) At the command of execution, MOVE, the four bearers proceed carefully over the rough terrain.

(4) Except when the patient has a fracture of a lower extremity, the litter is carried uphill or upstairs with the patient's head forward. Therefore, before proceeding with the uphill carry, the litter must first be turned correctly. From the position of four-man carry (Figure J-23), the litter squad first moves into the position of litter post carry (Figure J-25); then the command Prepare to Rotate, ROTATE (Figure J-26) is given and followed by command, Uphill (Upstairs) Carry, MOVE (Figure J-27).

Figure J-25. Litter post carry for rough terrain.

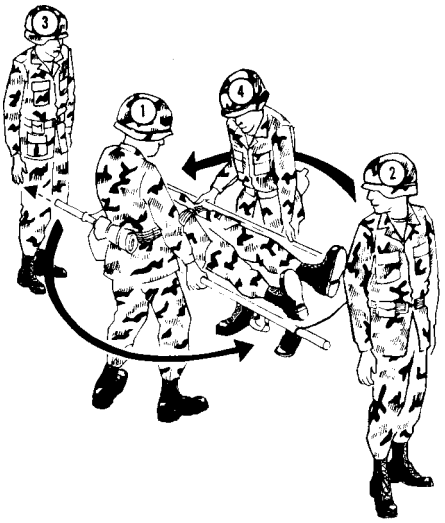

Figure J-26. Rotation of the litter for uphill or upstairs carry and for ambulance loading.

(*a*) With the litter squad in the position of litter post carry, the preparatory command, Prepare to Rotate, is given. Bearers numbers 2 and 3 release the litter handles and step one pace away, allowing bearers numbers 1 and 4 to support the litter at its sides.

(*b*) At the command of execution, ROTATE, bearers numbers 1 and 4 move 180 degrees counterclockwise, thus placing the patient's head in the direction of travel with bearer number 1 still on the patient's right side.

(*c*) As soon as bearers numbers 2 and 3 observe that the rotation has been completed, they resume their positions at the litter handles. The rotation of the litter places bearer number 2 at the patient's head.

(*d*) After the litter is rotated so that the patient's head is in the direction of travel, the squad halts.

(*e*) At the preparatory command, Uphill (Upstairs) Carry, bearer number 4 moves to the foot of the litter and takes hold of the litter handle released by bearer number 3. Bearer number 1 moves in front of the squad.

(*f*) At the command of execution, MOVE, the squad proceeds uphill (upstairs) with bearer number 1 preceding the squad. Bearers numbers 3 and 4 keep the litter level.

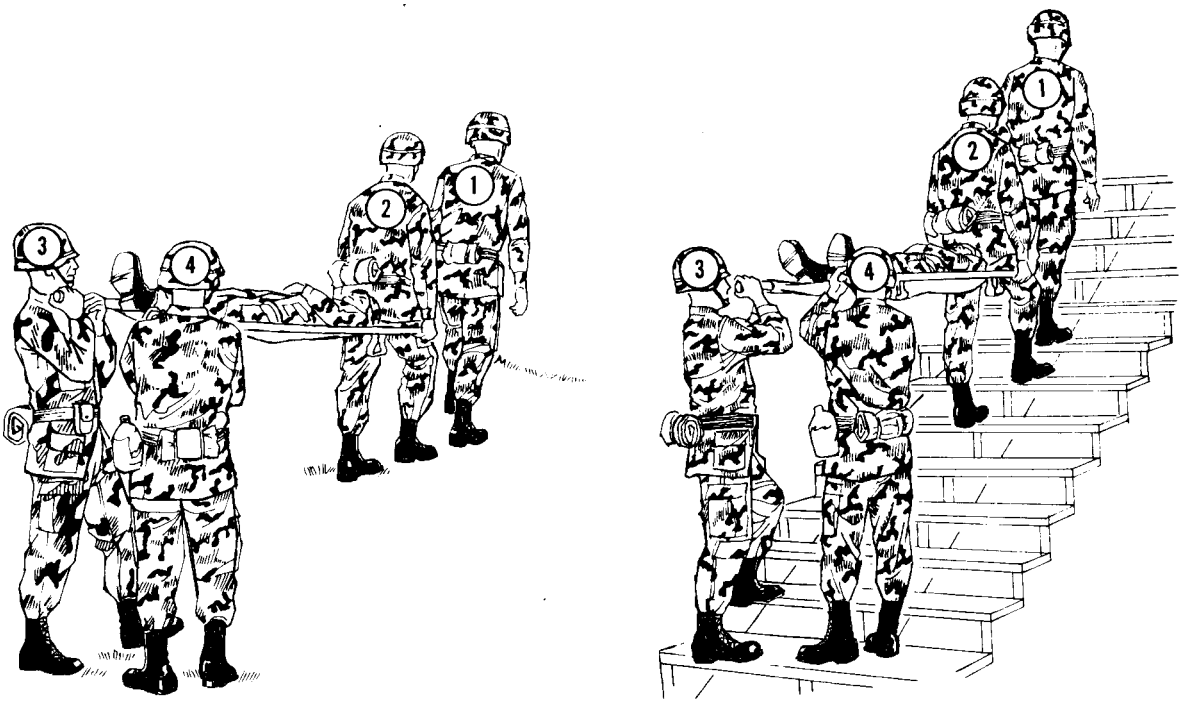

Figure J-27. Uphill and upstairs carry.

(5) Except when the patient has a fracture of a lower extremity, the litter should be carried downhill or downstairs with the patient's feet forward. The command Downhill (Downstairs) Carry, MOVE (Figure J-28) is given when the litter squad is in the position of four-man carry (Figure J-23) or in the position of litter post carry (Figure J-25) provided it has been used to rotate the loaded litter or to move it over rough terrain just prior to carrying it downhill (downstairs).

(*a*) With the litter squad in the position of the four-man carry, the preparatory command, Downhill (Downstairs) Carry, is given. Bearer number 3 takes the full support of the litter at the patient's head, and bearers numbers 2 and 4 remain in their positions at the patient's feet.

(*b*) Bearer number 1 moves to the front, facing the squad. He supports bearers numbers 2 and 4 and ensures that they keep the litter level as they move downhill (downstairs).

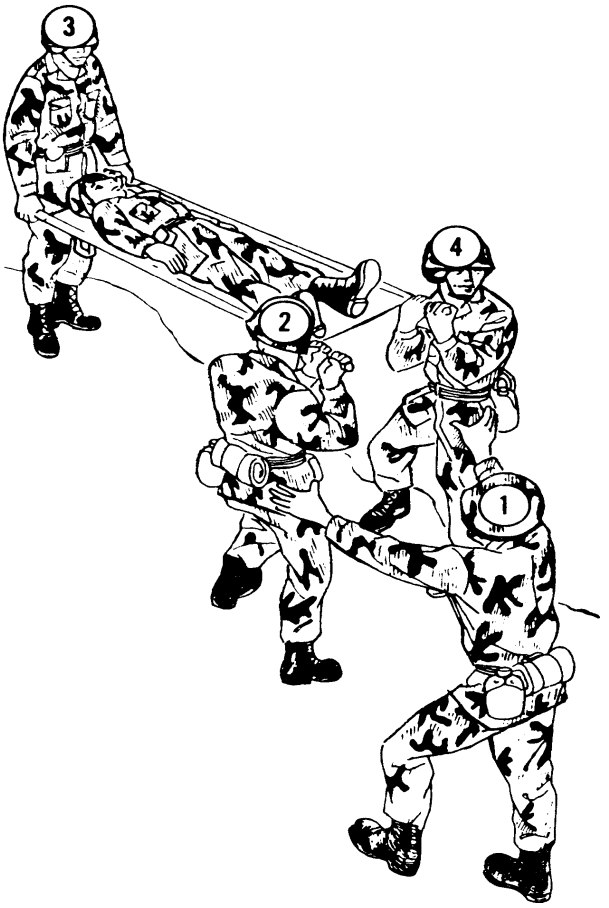

Figure J-28. Downhill or downstairs carry.

c. To Lower Loaded Litter. Before lowering the litter to the ground, the bearers resume the position of four-man carry. At the preparatory command Lower, LITTER, each bearer slowly kneels on the knee closer to the litter and gently places the litter on the ground. The squad then stands without command. For balance and support when lowering the litter, each bearer places his free hand on his other knee which remains in an upright position.

J-8. Procedures for Surmounting Obstacles

In litter transportation, bearers must be able to surmount various artificial and natural obstacles such as fences, high walls, deep trenches, wide streams, and stairwells with small landings. Specific commands for surmounting these obstacles are neither necessary nor feasible, as they must be given in conjunction with the commands for the appropriate litter carry. Common sense must also be used in adapting specific procedures to individual situations.

a. Litter Obstacle Course. A litter obstacle course is a useful training tool for surmounting obstacles and for the physical conditioning of bearers. An obstacle course can be constructed to simulate most types of natural and artificial obstructions that litter bearers are likely to meet. Where construction of such a course is impracticable, many obstacles can be simulated from existing facilities.

b. Methods for Surmounting Obstacles. A number of methods, as well as modifications in litter carries, which enable the litter squad to surmount various obstacles, are discussed below.

(1) *Surmounting a fence or low wall.*

(*a*) With the litter squad in the position of Litter Post, CARRY, bearer number 2 releases his grasp of the front handles at the patient's feet and crosses the obstacle, maintaining a low silhouette. Bearers numbers 1, 3, and 4 then advance the litter until bearer number 2 can resume his grip of the front handles (Figure J-29).

(*b*) The litter is rested on the obstacle with the stirrups placed on the side of the obstacles in the direction of travel. Bearers numbers 2 and 3 support the litter by the front and rear handles, respectively, while bearers numbers 1 and 4 cross the obstacle maintaining a low silhouette. Having passed the obstacle, bearers number 1 and 4 grasp the litter poles near the rear handles held by bearer number 3. Bearer number 3 then releases his hold of the rear handles and crosses the obstacle, maintaining a low silhouette. Bearer number 3 resumes his grasp on the rear handles and bearers numbers 1 and 4 adjust the position of their holds (Figure J-30).

NOTE

The litter should be lifted and not dragged across the top of the obstacle.

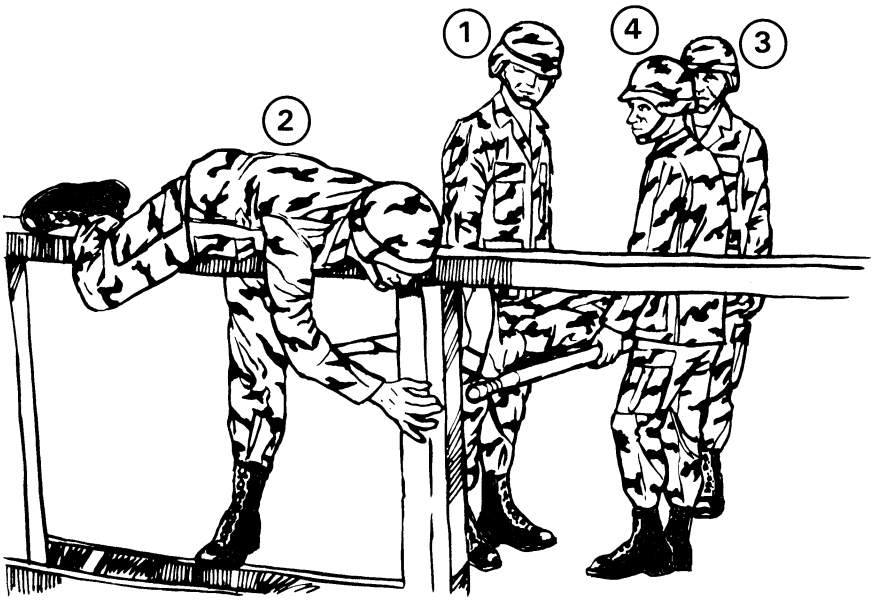

Figure J-29. Surmounting a fence or low wall (step one).

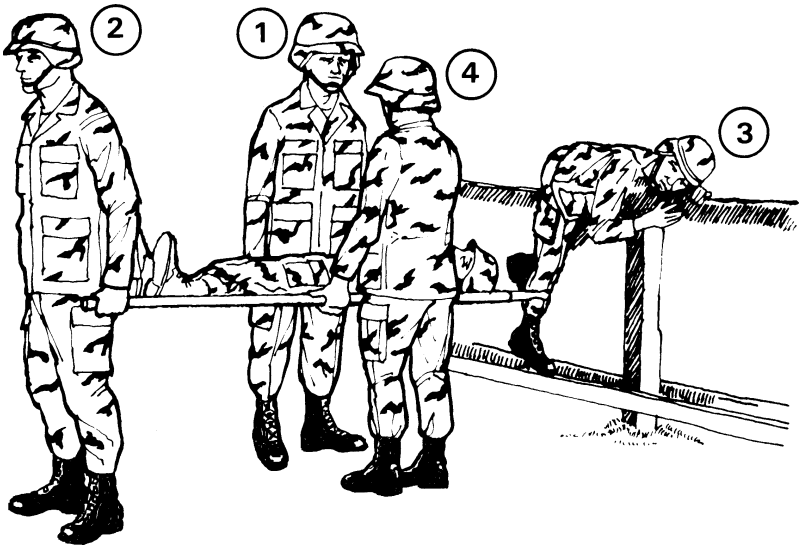

Figure J-30. Surmounting a fence or low wall (step two).

(2) *Surmounting a high wall.* With the litter squad in the position of the four-man carry, the bearers turn and face each other. Together they raise the litter approximately chest high, step close to the litter, letting their bent elbows touch their chests. The front bearers place the front stirrups beyond the wall, scale the wall and drop to the other side. All four bearers move the litter forward until the rear stirrups are against the wall, taking care to avoid scraping the patient's back. The rear bearers then scale the wall and drop to the other side and lift their end of the litter off the wall (Figure J-31). The bearers then resume the four-man carry.

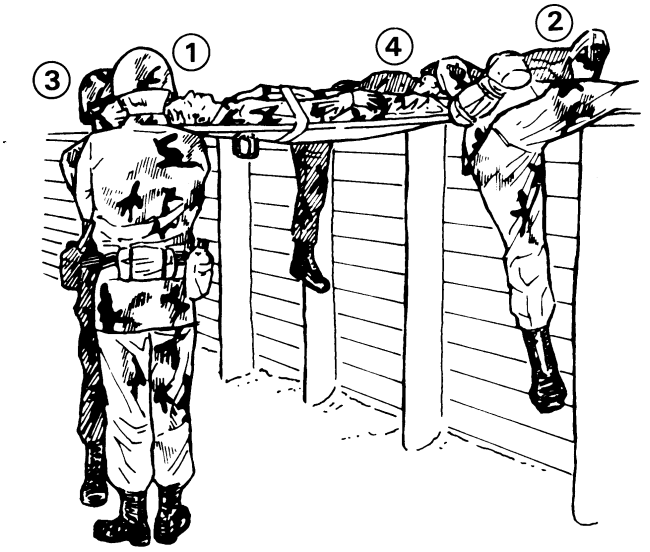

Figure J-31. Surmounting a high wall.

(3) *Fording streams and crossing deep trenches.*

(*a*) With the litter squad in position for the four-man carry, the bearers turn and face each other, determining who is the taller of the two at each end of the litter. Together they raise the litter over their heads, keeping it level. If they are in a trench, they lift the litter above the top of the trench (Figure J-32).

(b) The taller bearer at each end of the litter moves between the handles, facing in the direction of travel and grasps the handles as close to the canvas as possible. The shorter bearer at each end moves under the litter, facing in the direction of travel and grasps the stirrups, which compensate for the differences in height. If all bearers are of equal height, the bearers under the litter grasp the litter poles to the side of the stirrups nearer the ends (Figure J-33).

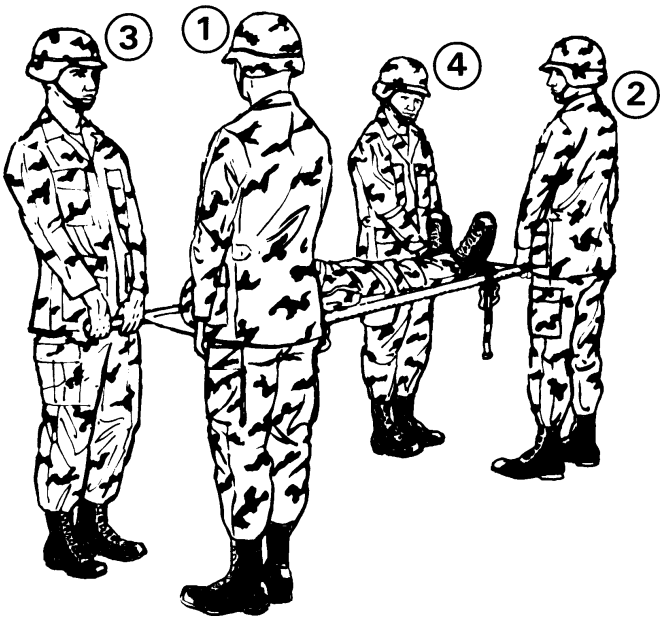

Figure J-32. Fording streams and crossing deep trenches (*overhead carry, step one*).

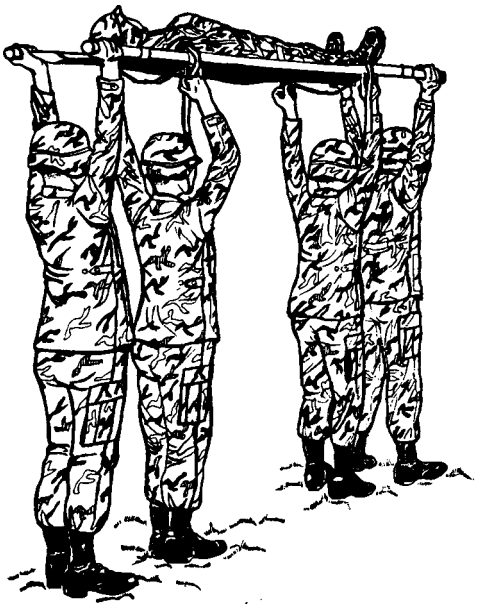

Figure J-33. Fording streams and crossing deep trenches (*overhead carry, step two*).

NOTE

Should the front bearer step into a hole as they proceed across the stream and release his hold, the other three bearers could keep the litter in position.

(4) *Carrying a litter patient up a stairwell with small landings*. The steps for this procedure (Figure J-34) are—

(*a*) The litter squad proceeds upstairs to the landing with bearers numbers 1 and 3 supporting the head of the litter and bearers numbers 2 and 4 supporting the foot of the litter.

(*b*) Upon arrival at the landing, bearer number 3 turns facing the head of the litter and supports it while bearer number 1 proceeds several steps up the next flight of stairs. Bearers numbers 2 and 4 raise the foot of the litter until bearer number 1 can grasp the handle released by bearer number 2. Bearer number 2 then moves to the side of the litter.

(*c*) With bearer number 2 helping bearer number 1 to support the litter, bearer number 1 grasps the handle released by bearer number 4.

(*d*) Bearer number 4 continues to help support the litter on the side as he moves up the stairs.

(*e*) Bearer number 4 assists bearer number 3 in carrying the head of the litter while bearer number 2 advances and assists bearer number 1 in carrying the foot of the litter to the next landing.

(5) *Carrying a litter patient down a stairwell with a small landing*. The steps for this procedure (Figure J-35) are—

(*a*) The litter squad proceeds down the steps to the first landing with bearers numbers 1 and 3 supporting the head of the litter and bearers numbers 2 and 4 supporting the foot of the litter.

(*b*) Upon arrival at the first landing, bearer number 4 turns and faces toward the litter and supports the foot of the litter while bearer number 3 supports the head of the litter. Bearers numbers 1 and 2 descend a few steps to the lower flight of stairs and receives the head of the litter from bearer number 3.

(*c*) Bearer number 3 moves to the foot of the litter to assist bearer number 4 while bearers numbers 1 and 2 support the head of the litter. They then move down the stairs to the next landing.

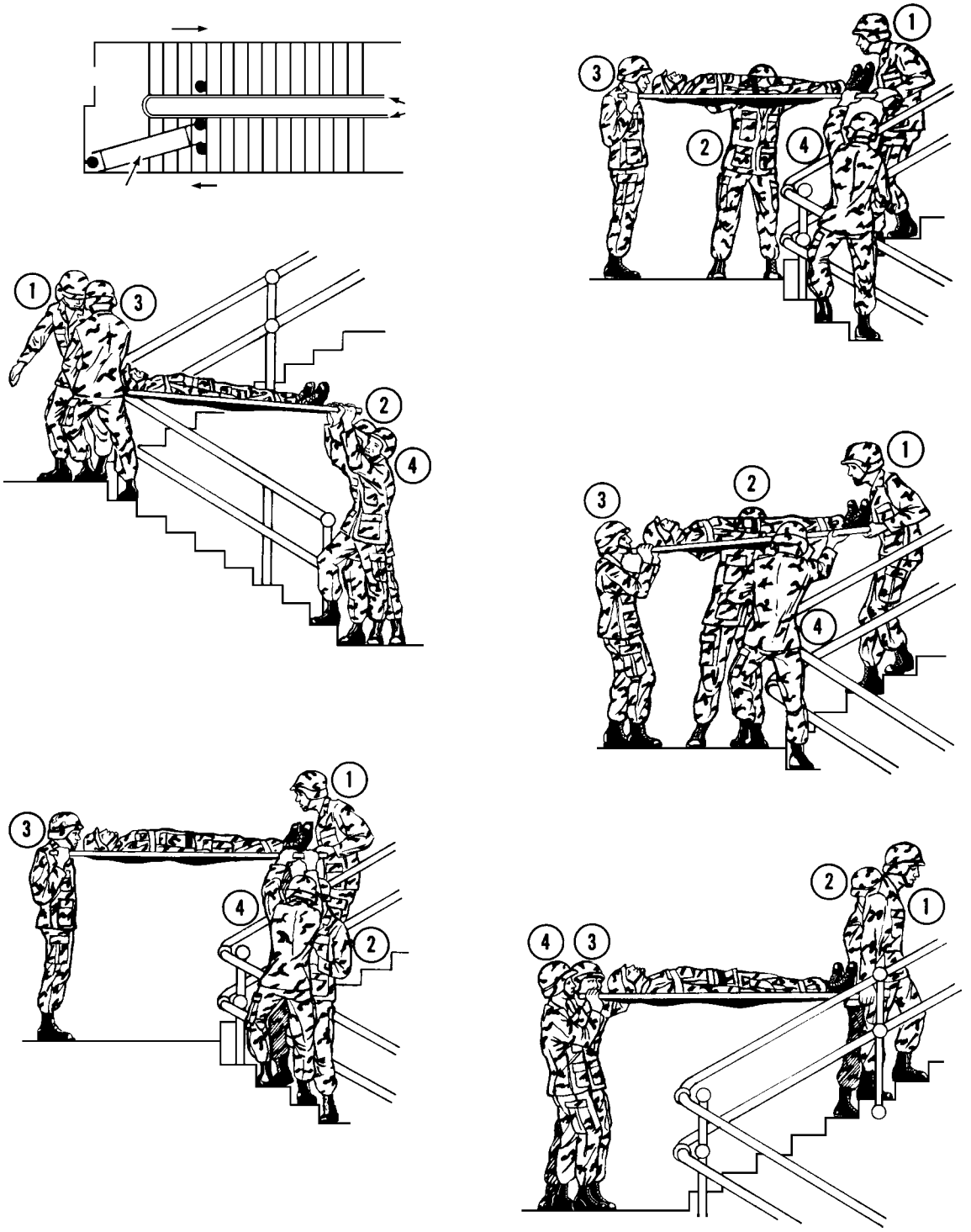

Figure J-34. Carrying a litter patient up a stairwell with small landings.

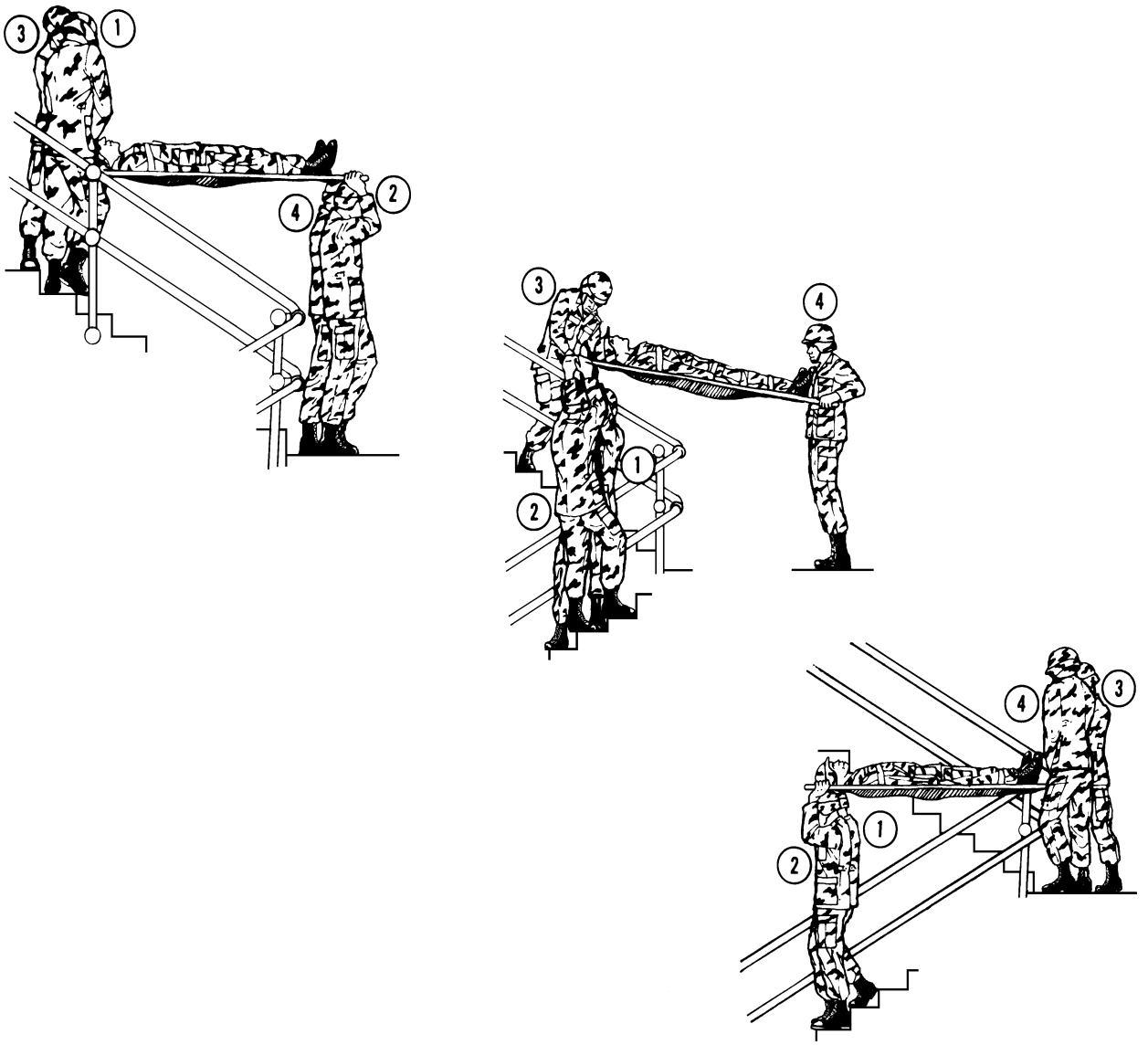

Figure J-35. Carrying a litter patient down a stairwell with small landings.

APPENDIX K

SELECTION OF PATIENTS FOR AEROMEDICAL EVACUATION AND PATIENT CLASSIFICATION CODES AND PRECEDENCE

K-1. General

Patient classification codes provide information to evacuators and treatment personnel in an abbreviated form. They can be used to complete administrative reporting requirements pertaining to the evacuation of patients.

Paragraphs K-2 through K-5 implement STANAG 3204 and AIR STD 61/71.

K-2. Selection of Patients for Aeromedical Evacuation

Patients selected for evacuation by air must be cleared for the proposed flight by the attending physician and/or health care provider at the OMF, staging element, or an en route care facility. The health care provider must balance fitness considerations with the availability of suitable in-flight medical care, urgency of treatment by the next echelon of care, and the operational capabilities of the available aircraft.

a. Forward Aeromedical Evacuation. The paramount need is to evacuate the patient from the point of injury to the initial point of treatment as quickly as possible. Helicopters will be used for airlift, and in these circumstances, the only available personnel will often be combat lifesavers trained in first aid or combat/flight medics. The principles for conducting evacuation in forward areas is discussed in STANAG 2087.

b. Tactical and Strategic Intratheater and Intertheater Aeromedical Evacuation. The benefit to the patient for evacuation to an area where appropriate MTFs are available must be balanced against the ability of the patient to withstand the anticipated environmental conditions of the flight.

(1) When AE is carried out with pressurized aircraft, appropriately fitted and carrying a trained in-flight medical crew, the patient is subjected only to minor mechanical disturbance and a slight degree of oxygen lack that can be countered with oxygen therapy.

(2) In wartime AE, however, conditions may often be much less favorable. Account must be taken of the effects on the prospective passenger of less significant changes in atmospheric pressure and cabin temperature, turbulence, and workload and capability of the in-flight medical crew operating with restricted facilities. Further, the type of aircraft and the flight plan (duration of flight and intervening stops) also impact on care and stability of the patients.

c. Clinical Selection Criteria. There are no absolute contraindications to AE. Each case must be judged on its merits, weighing the advantage to the patient of transfer against the possible harmful effects of the flight. Sometimes a calculated risk must be taken.

(1) However, as a guide it would be wise to accept the following types of patients only when there is no other acceptable means of transport:

- Patients in the infective stage of serious communicable diseases. If any are carried, appropriate precautions must be taken for the protection of the other patients/crew members.

- Sick and wounded patients whose general condition is poor and they may not survive the flight or whose medical condition will severely deteriorate.

- Patients whose upper and lower jaws are immobilized. Such patients require constant supervision by persons who are competent and equipped to remove the tie materials immediately should the patient become airsick or vomit. Fixation by intermaxillary elastics is preferable to wire because of the ease of cutting.

- Pregnant patients beyond the 240th day of pregnancy are not routinely acceptable for AE, but may be moved if determined necessary to the patient's mental and/or physical health by competent medical authority.

(2) Patient with any of the following conditions require special consideration in selection for AE (particularly in unpressurized aircraft [helicopter]):

- Respiratory embarrassment. Patients whose unaided vital capacity is less than 900 milliliters (ml) should not normally be moved by air without a mechanical respirator.

- Cardiac failure or early postmyocardial infarction.

- Severe anemia (less than 2.5 million red blood cells [RBC] per cubic millimeter or less than 7 grams hemoglobin per 100 ml) estimated as near as possible to the proposed flight and not more than 72 hours beforehand.

- Trapped gas within any of the body cavities (such as a pneumothorax). Post-laparotomy or thoracotomy patients should not normally be moved within 10 days of operations except in pressurized aircraft.

- Patients in plaster of paris casts should be escorted since limbs may swell during flight, necessitating bivalving of the cast. Casts applied less than 72 hours prior to the flight are to be of the GYPSONA type and are split (including all dressings) down to the skin level. Patients with lower limb plasters are normally litter cases unless the cast has been on for more than 7 days and there is no residual tissue swelling.

- Detached retina, intraocular hemorrhage, or any choroidal or retinal injury. Hypoxia can increase intraocular tension and cause meiosis.

- Patients with subarachnoid hemorrhage should be moved either before 48 hours or after 6 weeks have elapsed.

- Patients with vascular anastomosis should not be subjected to AE evacuation for 14 days.

(3) Patients with critical medical or surgical conditions (such as penetrating wounds or injuries of the chest or abdomen) should be stabilized if at all possible before AE.

K-3. Briefing of Patients Prior to Aeromedical Evacuation

When patients are evacuated by aircraft (routinely in Echelons III, IV, and V), they should be briefed on the following points:

a. A number of ambulatory patients will be detailed to assist with the evacuation of litter patients in any emergency.

b. Safety belts and litter straps are to be properly fastened in accordance with orders given by the pilot.

c. Patients are instructed on the proper position to assume in preparing for an emergency. Flight crews and CCAT ensure that seat safety harnesses have been tightened.

d. Ambulatory patients, with the exception of those designated to assist litter patients, are the first to leave a downed aircraft.

e. Immobilized litter patients are freed from litters and assisted in leaving the aircraft. Litters will not normally be removed from their fastenings in view of the limited time available to evacuate the aircraft.

f. Mentally disturbed patients should be quieted so that the orderly removal of other patients will not be jeopardized.

K-4. International Standardization Agreement Codes

Table K-1 provides the patient classification codes defined in international standardization agreements.

K-5. International Standardization Evacuation Precedence

Patients for AE will be given appropriate degrees of priority so that, if aircraft space is limited, the more urgent patients may be evacuated before those whose conditions are less serious. The degrees

of priority are depicted in Table K-2. (The evacuation precedence used by the USAF is essentially the same as this listing. It contains a few word changes and introduces specific time limits. It does not contain Priority 4.)

Table K-1. Patient Classification Codes

CODE	CLASSIFICATION
	CLASS 1. PSYCHIATRIC CATEGORY
1A	STRETCHER PATIENTS WHO ARE FRANKLY DISTURBED AND INACCESSIBLE, REQUIRING CLOSE SUPERVISION AND SEDATION, OR THE USE OF RESTRAINT EQUIPMENT.
1B	PATIENTS WHO ARE NOT AT THE TIME OF REQUEST GROSSLY DISTURBED, BUT WHO MAY REACT BADLY TO AIR TRAVEL, OR WHO MAY COMMIT ACTS LIKELY TO ENDANGER THEMSELVES OR THE SAFETY OF THE AIRCRAFT AND ITS OCCUPANTS.
1C	SITTING PATIENTS WHO ARE COOPERATIVE AND HAVE PROVED THEMSELVES TO BE RELIABLE UNDER PREFLIGHT OBSERVATION.
	CLASS 2. STRETCHER PATIENTS OTHER THAN PSYCHIATRIC
2A	PATIENTS, WHO IN AN EMERGENCY, WOULD BE UNABLE TO LEAVE THE AIRCRAFT WITHOUT ASSISTANCE.
2B	PATIENTS, WHO IN AN EMERGENCY, WOULD BE ABLE TO LEAVE THE AIRCRAFT UNAIDED.
2C	PATIENTS WHO CAN WALK ONTO AN AIRCRAFT BUT ON A LONG FLIGHT WOULD BENEFIT FROM A LITTER.
	CLASS 3. SITTING PATIENTS OTHER THAN PSYCHIATRIC
3A	SITTING PATIENTS, INCLUDING HANDICAPPED PERSONS, WHO MAY NEED MEDICAL OR NURSING ATTENTION EN ROUTE AND WHO, IN AN EMERGENCY, WOULD REQUIRE ASSISTANCE TO ESCAPE.
3B	SITTING PATIENTS WHO MAY NEED MEDICAL OR NURSING ATTENTION EN ROUTE AND WHO WOULD BE ABLE TO ESCAPE UNASSISTED IN AN EMERGENCY.
	CLASS 4. SITTING PATIENTS OTHER THAN PSYCHIATRIC
4	PATIENTS WHO WILL NOT NEED MEDICAL OR NURSING ATTENTION EN ROUTE AND ARE CAPABLE OF TRAVELING UNESCORTED. CLASS 4 PATIENTS ARE NORMALLY REQUIRED TO MAKE THEIR OWN WAY FROM THE DEPLANING AIRFIELD TO THEIR DESTINATION.

Table K-2. Patient Priorities as Designated in STANAG 3204 and Air Standard 61/71.

PRIORITY 1/URGENT	EMERGENCY PATIENTS FOR WHOM SPEEDY EVACUATION IS NECESSARY TO SAVE LIFE OR LIMB, TO PREVENT COMPLICATION OF SERIOUS ILLNESS, OR TO AVOID SERIOUS PERMANENT DISABILITY.
PRIORITY 2/PRIORITY	PATIENTS WHO REQUIRE SPECIALIZED TREATMENT NOT AVAILABLE LOCALLY AND WHO ARE LIABLE TO SUFFER UNNECESSARY PAIN OR DISABILITY UNLESS EVACUATED WITH THE LEAST POSSIBLE DELAY.
PRIORITY 3/ROUTINE	PATIENTS WHOSE IMMEDIATE TREATMENT REQUIREMENTS ARE AVAILABLE LOCALLY BUT WHOSE PROGNOSIS WOULD DEFINITELY BENEFIT BY AIR EVACUATION ON ROUTINE SCHEDULED FLIGHTS.
PRIORITY 4	PATIENTS FOR WHOM AIR EVACUATION IS A MATTER OF MEDICAL CONVENIENCE RATHER THAN NECESSITY.

K-6. Patient Classification

Table K-3 provides the patient classification codes used aboard USAF aircraft and that can be used in completing DD Form 601 (Appendix H). These codes are expanded to include categories of patients and other personnel which may or may not apply on the battlefield (such as infants, relatives, or friends).

K-7. United States Air Force Evacuation Precedence

The evacuation precedence used by the USAF is dramatically different than that employed by the US Army medical evacuation system. These precedence should not be confused. Table K-4 provides the evacuation precedence and time frames used by the USAF.

Table K-3. Patient Classification Codes

CODE	CLASSIFICATION
	CLASS 1. NEUROPSYCHIATRIC PATIENTS
1A	SEVERE PSYCHIATRIC LITTER PATIENTS REQUIRING THE USE OF RESTRAINING APPARATUS, SEDATION, AND CLOSE SUPERVISION AT ALL TIMES.
1B	PSYCHIATRIC LITTER PATIENTS OF INTERMEDIATE SEVERITY REQUIRING TRANQUILIZING MEDICATION OR SEDATION, NOT NORMALLY REQUIRING THE USE OF RESTRAINING APPARATUS, BUT WHO REACT BADLY TO AIR TRAVEL OR WHO MAY COMMIT ACTS LIKELY TO ENDANGER THEMSELVES OR THE SAFETY OF THE AIRCRAFT. RESTRAINING APPARATUS SHOULD BE AVAILABLE FOR USE.
1C	PSYCHIATRIC WALKING PATIENTS OF MODERATE SEVERITY WHO ARE COOPERATIVE AND WHO HAVE PROVED RELIABLE UNDER OBSERVATION.
	CLASS 2. LITTER PATIENTS (OTHER THAN PSYCHIATRIC)
2A	IMMOBILE LITTER PATIENTS UNABLE TO MOVE ABOUT OF THEIR OWN VOLITION UNDER ANY CIRCUMSTANCES.
2B	MOBILE LITTER PATIENTS ABLE TO MOVE ABOUT OF THEIR OWN VOLITION IN AN EMERGENCY.
	CLASS 3. WALKING PATIENTS (OTHER THAN PSYCHIATRIC)
3A	NONPSYCHIATRIC AND NONSUBSTANCE ABUSE PATIENTS WHO REQUIRE MEDICAL TREATMENT, ASSISTANCE, OR OBSERVATION EN ROUTE.
3B	RECOVERED PATIENTS WHO ARE RETURNING TO THEIR UNITS AND REQUIRE NO MEDICAL ATTENTION EN ROUTE.
3C	AMBULATORY DRUG OR ALCOHOL SUBSTANCE ABUSE PATIENTS.
	CLASS 4. INFANT CATEGORY
4A	INFANTS UNDER THREE YEARS, OCCUPYING A SEAT OR IN A BASSINET OR CAR SEAT SECURED IN AN AMBULATORY SEAT.
4B	RECOVERED INFANTS UNDER THREE YEARS, OCCUPYING A SEAT OR IN A BASSINET OR CAR SEAT SECURED IN AN AMBULATORY SEAT.
4C	INFANTS IN AN INCUBATOR.
4D	INFANTS UNDER THREE YEARS ON A LITTER.
4E	OUTPATIENTS UNDER THREE YEARS ON A LITTER FOR COMFORT.

Table K-3. Patient Classification Codes (Continued)

CODE	CLASSIFICATION
	CLASS 5. OUTPATIENT CATEGORY
5A	AMBULATORY, NONPSYCHIATRIC, AND NONSUBSTANCE ABUSE OUTPATIENTS WHO ARE TRAVELING FOR AN OUTPATIENT VISIT AND DO NOT REQUIRE A LITTER OR MEDICAL ASSISTANCE IN FLIGHT.
5B	AMBULATORY DRUG OR SUBSTANCE ABUSE OUTPATIENTS GOING FOR TREATMENT.
5C	PSYCHIATRIC OUTPATIENTS GOING FOR TREATMENT.
5D	OUTPATIENTS ON A LITTER FOR COMFORT OR SAFETY.
5E	RETURNING OUTPATIENTS ON A LITTER FOR COMFORT OR SAFETY.
5F	OTHER RETURNING OUTPATIENTS.
	CLASS 6. ATTENDANT CATEGORY
6A	MEDICAL ATTENDANTS, EITHER PHYSICIAN, NURSE, OR TECHNICIAN, WHO ARE ASSIGNED TO GIVE SPECIALIZED MEDICAL TREATMENT OR NURSING CARE TO A PARTICULAR PATIENT.
6B	NONMEDICAL ATTENDANTS, EITHER RELATIVES OR FRIENDS, WHO MAY ASSIST WITH THE PATIENT'S CARE AND WHO MAY ALSO REQUIRE SUPPORT.

Table K-4. Evacuation Precedence Used by the United States Air Force

EVACUATION PRECEDENCE	DEFINITION AND TIME FRAMES
URGENT PRECEDENCE	APPLIES ONLY TO THE NEED FOR IMMEDIATE LIFE, LIMB, OR EYESIGHT SAVING. THESE PATIENTS SHOULD BE PICKED UP AND DELIVERED TO THE DESTINATION FACILITY AS SOON AS POSSIBLE.
PRIORITY PRECEDENCE	APPLIES TO THE NEED FOR PROMPT MEDICAL CARE NOT AVAILABLE LOCALLY. THESE PATIENTS SHOULD BE PICKED UP WITHIN 24 HOURS AND DELIVERED TO THE DESTINATION FACILITY WITH THE LEAST POSSIBLE DELAY.
ROUTINE PRECEDENCE	APPLIES TO ALL OTHER PATIENTS. ROUTINE PATIENTS WILL BE PICKED UP AND DELIVERED ON REGULARLY SCHEDULED FLIGHTS.

APPENDIX L

RISK MANAGEMENT

L-1. General

a. Risk management is the process of identifying, assessing, and controlling risks arising from operational factors and making decisions that balance risk costs with mission benefits. Leaders and soldiers at all levels use risk management. It applies to all missions and environments across the wide range of Army operations.

b. For an in-depth discussion of risk management, refer to FM 100-14. This manual also provides a sample risk management work sheet for use in assessing risks.

L-2. Types of Risks

Hazards can exist, regardless of enemy or adversary actions, in areas with no direct enemy contact and in areas outside the enemy's or adversary's influence. The two types of risk that exist across the wide range of Army operations are *tactical risks* and *accident risks*.

a. *Tactical risk* is risk concerned with hazards that exist because of the presence of either an enemy or an adversary. It applies to all levels of war and across the spectrum of operations.

b. *Accident risk* includes all operational risk considerations other than tactical risk. It includes risks to the friendly force. It also includes risks posed to civilians by an operation, as well as an operation's impact on the environment. It can include activities associated with hazards concerning friendly personnel, civilians, equipment readiness, and environmental conditions.

L-3. Hazards

A hazard is an actual, or potential, condition where the following can occur due to exposure to the hazard:

- Injury, illness, or death of personnel.
- Damage to or loss of equipment and property.
- Mission degradation.

L-4. Risk Management Steps

a. Risk management is a five-step approach (Figure L-1) for ensuring that operations and mission accomplishment are not compromised by accidents.

b. The five steps of risk management are—

(1) *Identify hazards*. Identify the most probable hazards for the mission. Hazards are conditions with the potential of causing injury to personnel, damage to equipment, loss of material, or a

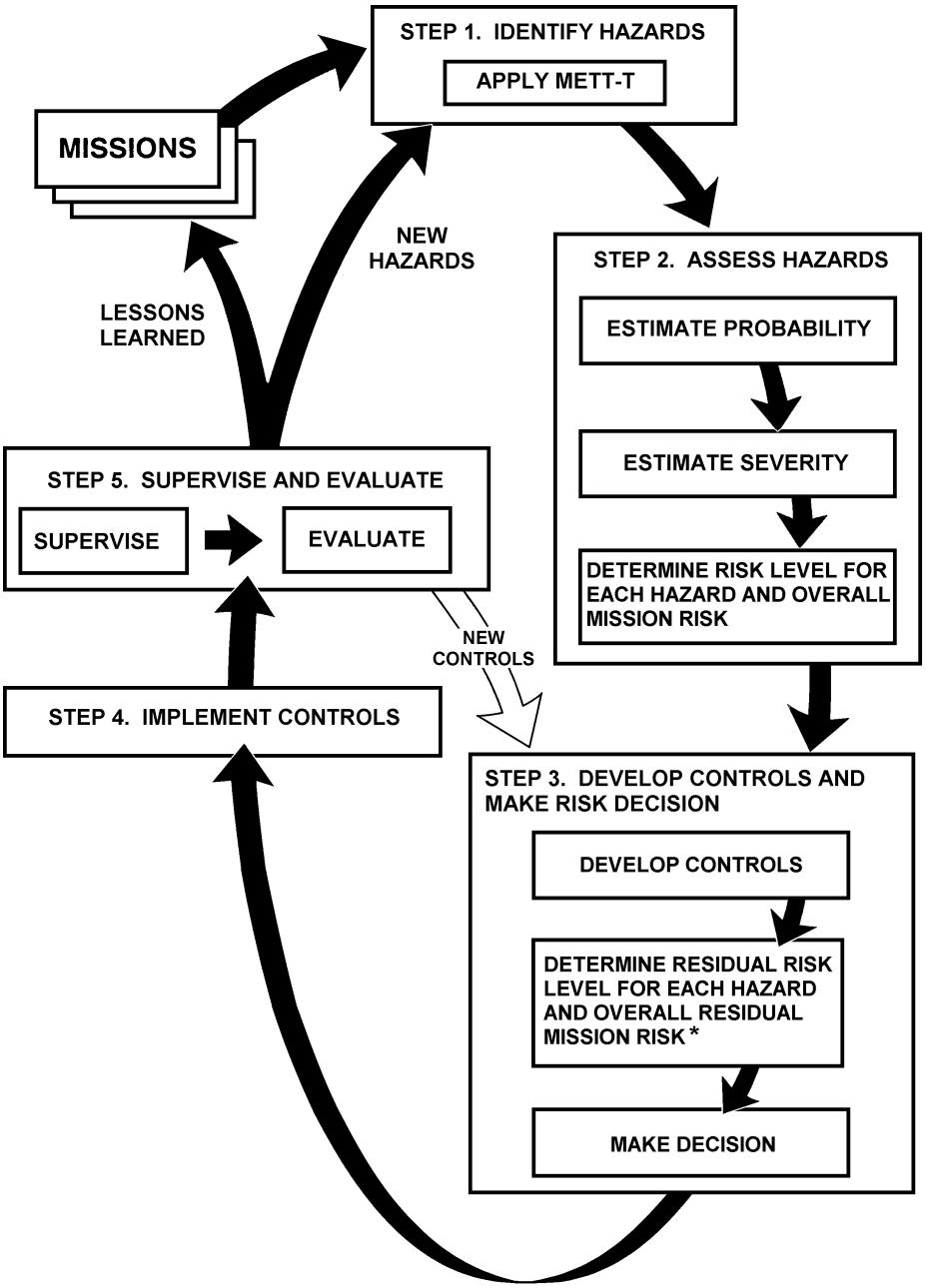

* AS CONTROLS FOR HAZARDS ARE IDENTIFIED AND SELECTED THE HAZARDS ARE REASSESSED AS IN STEP 2

Figure L-1. Five steps of risk management.

lessening of the ability to perform a task or mission. The most probable hazards are those created by readiness shortcomings in the operational environment. When a list of frequently recurring hazards is applied to a specified task or mission, the most probable hazards can be identified.

(2) *Assess hazards to determine risks*. Once the most probable hazards are identified, analyze each to determine the probability of its causing an accident and the probable effect of the accident. Also, identify control options to eliminate or reduce the hazard.

(3) *Develop controls and make risk decisions*. Weigh the risk against the benefits of performing the operation. Accept no unnecessary risks; make any residual risk decisions at the proper level of command.

(4) *Implement controls*. Integrate specific controls into OPLANs, OPORDs, TSOPs, and rehearsals. Communicate controls down to the individual soldier.

(5) *Supervise and evaluate*. Determine the effectiveness of controls in reducing the probability and effect of identified hazards. Ensure that risk control measures are performing as expected. Include follow-up reviews during and after actions to ensure all went according to plan, reevaluating or adjusting the plan as required, and developing lessons learned.

L-5. Risk Management Principles

The principles which guide risk management are—

- Integrating risk assessment into mission planning, preparation, and execution.
- Making risk management decisions at the appropriate level in the chain of command.
- Accepting no unnecessary risk.

L-6. Risk Assessment

a. Leaders and staffs assess each hazard in relation to the probability of a hazardous incident. The probability levels estimated for each hazard may be based on mission, COAs being developed and analyzed, or frequency of a similar event. Table L-1 provides a summary of the five degrees of probability. The letters in parentheses following each degree (A through E) provide a symbol for depicting probability. Table L-2 provides a summary of the hazard severity. Figure L-2 is the US Army risk assessment matrix.

b. There are four levels of risk. These levels are—

- *Low Risk.* Low risk operations are where normal caution, supervision, and safety procedures ensure a successful and safe mission.

Table L-1. Hazard Probability

FREQUENT (A) OCCURS VERY OFTEN, CONTINUOUSLY EXPERIENCED	
SINGLE ITEM	OCCURS VERY OFTEN IN SERVICE LIFE. EXPECTED TO OCCUR SEVERAL TIMES OVER DURATION OF A SPECIFIC MISSION OR OPERATION. ALWAYS OCCURS.
FLEET OR INVENTORY OF ITEMS	OCCURS CONTINUOUSLY DURING A SPECIFIC MISSION OR OPERATION, OR OVER A SERVICE LIFE.
INDIVIDUAL SOLDIER	OCCURS VERY OFTEN IN CAREER. EXPECTED TO OCCUR SEVERAL TIMES DURING MISSION OR OPERATION. ALWAYS OCCURS.
ALL SOLDIERS EXPOSED	OCCURS CONTINUOUSLY DURING A SPECIFIC MISSION OR OPERATION.
LIKELY (B) OCCURS SEVERAL TIMES	
SINGLE ITEM	OCCURS SEVERAL TIMES IN SERVICE LIFE. EXPECTED TO OCCUR DURING A SPECIFIC MISSION OR OPERATION.
FLEET OR INVENTORY OF ITEMS	OCCURS AT A HIGH RATE, BUT EXPERIENCED INTERMITTENTLY (REGULAR INTERVALS, GENERALLY OFTEN).
INDIVIDUAL SOLDIER	OCCURS SEVERAL TIMES IN CAREER. EXPECTED TO OCCUR DURING A SPECIFIC MISSION OR OPERATION.
ALL SOLDIERS EXPOSED	OCCURS AT A HIGH RATE, BUT EXPERIENCED INTERMITTENTLY.
OCCASIONAL (C) OCCURS SPORADICALLY	
SINGLE ITEM	OCCURS SOME TIME IN SERVICE LIFE. MAY OCCUR ABOUT AS OFTEN AS NOT DURING A SPECIFIC MISSION OR OPERATION.
FLEET OR INVENTORY OF ITEMS	OCCURS SEVERAL TIMES IN SERVICE LIFE.
INDIVIDUAL SOLDIER	OCCURS SOMETIME IN CAREER. MAY OCCUR DURING A SPECIFIC MISSION OR OPERATION, BUT NOT OFTEN.
ALL SOLDIERS EXPOSED	OCCURS SPORADICALLY (IRREGULARLY, SPARSELY, OR SOMETIMES).
SELDOM (D) REMOTELY POSSIBLE; COULD OCCUR AT SOME TIME	
SINGLE ITEM	OCCURS IN SERVICE LIFE, BUT ONLY REMOTELY POSSIBLE. NOT EXPECTED TO OCCUR DURING A SPECIFIC MISSION OR OPERATION.
FLEET OR INVENTORY OF ITEMS	OCCURS AS ISOLATED INCIDENTS. POSSIBLE TO OCCUR SOME TIME IN SERVICE LIFE, BUT RARELY. USUALLY DOES NOT OCCUR.
INDIVIDUAL SOLDIER	OCCURS AS ISOLATED INCIDENT DURING A CAREER. REMOTELY POSSIBLE, BUT NOT EXPECTED TO OCCUR DURING A SPECIFIC MISSION OR OPERATION.
ALL SOLDIERS EXPOSED	OCCURS RARELY WITHIN EXPOSED POPULATION AS ISOLATED INCIDENTS.
UNLIKELY (E) CAN ASSUME WILL NOT OCCUR, BUT NOT IMPOSSIBLE	
SINGLE ITEM	OCCURRENCE NOT IMPOSSIBLE, BUT CAN ASSUME WILL ALMOST NEVER OCCUR IN SERVICE LIFE. CAN ASSUME WILL NOT OCCUR DURING A SPECIFIC MISSION OR OPERATION.
FLEET OR INVENTORY OF ITEMS	OCCURS RARELY (ALMOST NEVER OR IMPROBABLE). INCIDENTS MAY OCCUR OVER SERVICE LIFE.
INDIVIDUAL SOLDIER	OCCURRENCE NOT IMPOSSIBLE, BUT MAY ASSUME WILL NOT OCCUR IN CAREER OR DURING A SPECIFIC MISSION OR OPERATION.
ALL SOLDIERS EXPOSED	OCCURS VERY RARELY, BUT NOT IMPOSSIBLE.

Table L-2. Hazard Severity

CATASTROPHIC (I)	LOSS OF ABILITY TO ACCOMPLISH THE MISSION OR MISSION FAILURE. DEATH OR PERMANENT TOTAL DISABILITY (ACCIDENT RISK). LOSS OF MAJOR OR MISSION-CRITICAL SYSTEM OR EQUIPMENT. MAJOR PROPERTY (FACILITY) DAMAGE. SEVERE ENVIRONMENTAL DAMAGE. MISSION-CRITICAL SECURITY FAILURE. UNACCEPTABLE COLLATERAL DAMAGE.
CRITICAL (II)	SIGNIFICANTLY (SEVERELY) DEGRADED MISSION CAPABILITY OR UNIT READINESS. PERMANENT PARTIAL DISABILITY, TEMPORARY TOTAL DISABILITY EXCEEDING 3 MONTHS TIME (ACCIDENT RISK). EXTENSIVE (MAJOR) DAMAGE TO EQUIPMENT OR SYSTEMS. SIGNIFICANT DAMAGE TO PROPERTY OR ENVIRONMENT. SECURITY FAILURE. SIGNIFICANT COLLATERAL DAMAGE.
MARGINAL (III)	DEGRADED MISSION CAPABILITY OR UNIT READINESS. MINOR DAMAGE TO EQUIPMENT OR SYSTEMS, PROPERTY, OR THE ENVIRONMENT. LOST DAY DUE TO INJURY OR ILLNESS NOT EXCEEDING 3 MONTHS (ACCIDENT RISK). MINOR DAMAGE TO PROPERTY OR THE ENVIRONMENT.
NEGLIGIBLE (IV)	LITTLE OR NO ADVERSE IMPACT ON MISSION CAPABILITY. FIRST AID OR MINOR MEDICAL TREATMENT (ACCIDENT RISK). SLIGHT EQUIPMENT OR SYSTEM DAMAGE, BUT FULLY FUNCTIONAL AND SERVICEABLE. LITTLE OR NO PROPERTY OR ENVIRONMENTAL DAMAGE.

RISK ASSESSMENT MATRIX

		PROBABILITY				
SEVERITY		**FREQUENT A**	**LIKELY B**	**OCCASIONAL C**	**SELDOM D**	**UNLIKELY E**
CATASTROPHIC	**I**	**E**	**E**	**H**	**H**	**M**
CRITICAL	**II**	**E**	**H**	**H**	**M**	**L**
MARGINAL	**III**	**H**	**M**	**M**	**L**	**L**
NEGLIGIBLE	**IV**	**M**	**L**	**L**	**L**	**L**

E — EXTREMELY HIGH RISK
H — HIGH RISK
M — MODERATE RISK
L — LOW RISK

Figure L-2. Risk assessment matrix.

- *Moderate Risk.* There is the probable occurrence of minor, nonlife-threatening personnel injuries and equipment damage in medium risk operations. These operations have a remote possibility that severe injury or death will occur. These operations require complete unit involvement.

- *High Risk.* In high risk, mission capabilities are significantly degraded and there is a probability that severe personnel injuries, death, and major equipment damage will occur.

- *Extremely High Risk.* In this level, the unit will be unable to accomplish its mission and there is the probability that mass casualties or deaths will occur, plus the complete destruction of equipment.

L-7. Factors to Consider in Risk Assessment

Some factors which might be considered in the risk assessment process are presented in this paragraph. This is not a complete listing of all factors which should be considered, but rather some of the more routine categories. Factors for each mission will be dependent to some respect on the actual mission and where it is to be executed.

a. Level of Activity. This can include both individual and unit activity. With regard to the individual, it can include the type of activity (such as heavy, physical labor or sedentary desk work) or the pace required (such as continuous work with few, if any, breaks). With regard to the level of unit activity, it can include the operational tempo (OPTEMPO) (such as a mass casualty situation or the slower pace of performing routine hospital transfers between corps hospitals) or the phase of the operation (such as setting up or disestablishing the unit area, reinforcing hasty defensive positions, or the unit standing down).

b. Inherent Dangers of Equipment Used. Inherent dangers of the equipment used by the unit can include the potential for accidents if the equipment is used/stored improperly, or if it is not working correctly. In medical units if the medical equipment is not correctly calibrated or is otherwise malfunctioning, it presents a danger, not only to the operator but also to the patient (such as an improperly stored oxygen cylinder aboard the ambulance, or, an improperly calibrated x-ray machine at the clearing station). Further, in the unit there is an abundance of medical and nonmedical equipment which could cause fires or explosions, resulting in collateral damage to personnel or equipment if the equipment malfunctions.

c. Hazardous Materials Used or Produced. In medical units, there are numerous hazardous materials that are used to perform unit functions or produced as a byproduct of the mission (medical waste). Units must ensure that hazardous materials are properly handled and disposed of to ensure that they do not create a hazard for medical personnel, patients, and the environment.

d. Environmental Concerns. Environmental concerns encompass a number of areas which must be considered by a medical unit. Extremes in temperature can cause heat/cold injuries to medical personnel and increase the patient workload. Commanders must ensure that areas occupied by soldiers/units are free from industrial contamination, such as that found around chemical plants, petroleum storage areas, or iron foundries. Terrestrial elevations upon which operations are conducted can lead to mountain illness and increased numbers of impact injuries. Medical evacuation operations can be further complicated by having to rely on litter evacuation methods when traversing rugged terrain. Commanders must also consider the

effect of the mission on the environment. Such effects can cause an imbalance in the ecosystem, which may lead to unhealthful conditions for soldiers. (Refer to TC 5-400 for information on evaluating environmental risks.)

e. Availability of Protective Equipment. This factor includes items common to all military units (such as fire extinguishers, MOPP gear, or earplugs) as well as items which are primarily found in medical units (such as patient protective wraps and items used for universal protective measures). Medical units must consider the equipment available to the unit members as well as that required for the patients in their care.

f. Accident Frequency. The commander should focus on what types of accidents occur in the unit, their frequency, and areas in which they occur. If the frequency of accidents increases or if the accidents continue to occur in one operational area, it may be necessary to tighten control measures in these specific areas while instituting more generalized measures throughout the other operational areas. Accidents can include vehicle/aircraft accidents, accidents involving the loading and unloading of litters from evacuation platforms, or injuries resulting from litter evacuation operations conducted over rugged or swampy terrain.

g. Supervision. Supervision can serve as a control measure in areas where the frequency of accidents and/or other indications of hazards exist. The lack of supervision or inadequate supervision can result in an increase of hazards and accidents. The commander is challenged by the need to decrease hazards, but not stifle productivity. Supervision in medical evacuation operations can include ensuring route reconnaissance is performed, providing strip maps to decrease the likelihood of ambulance crews becoming lost, and ensuring that medical evacuation operations are synchronized with the fire support plan to decrease the likelihood of fratricide from friendly fire.

h. Weather. Weather conditions can increase the hazards of accomplishing the CHS mission as they may make it difficult to accomplish tasks. Adverse weather conditions increase the risk associated with operating equipment/vehicles/aircraft. For example: Weather which impacts adversely on the use of air ambulances results in increasing the patient load and the number of missions which are accomplished by ground ambulances. In mountain operations, where the means of evacuation is by litter carries or pack animals, severe weather (freezing temperatures and snow) may require a halt in medical evacuation operations. This delay may require that warming stations be improvised along the evacuation route to provide relief to patients and litter bearers.

i. Operational Conditions. These will vary with each mission. Units operating in remote locations or in underdeveloped areas have a higher potential of exposure to endemic and epidemic diseases (medical threat). Unimproved roads, rudimentary sanitation, and difficult terrain coupled with extremes in weather can create hazards not previously experienced in the operation.

j. Condition of Personnel. Soldiers who are well conditioned physically, acclimated to the climate in the operational area, well trained, and motivated perform tasks to a higher standard than do soldiers who are not. Continuous operations which restrict the amount of rest soldiers receive, strenuous activity in soldiers who are not acclimated to the climate, untrained and unmotivated soldiers, and those who are not physically well conditioned are some factors which can result in—

- More frequently occurring accidents.
- Job performance standards not being met.
- Preventive maintenance not being accomplished on unit equipment.

k. Personnel/Organizational Proficiency. Combat health support personnel are normally well trained within their medical specialties due to the length of training and standards required for award of their specialties. Many CHS personnel, however, are not as familiar with field duties as they are with those performed in table of distribution and allowance (TDA) facilities. The commander must assess how familiar his soldiers are with the field medical equipment contained in their MESs and with the common soldier tasks they are required to perform in the field.

l. Adequacy of Site. The CHS commander must carefully evaluate the area assigned for the establishment of the unit. Sufficient real estate must be allotted for establishing unit operations (administrative areas), sleep areas, motor pools, field feeding area, helicopter landing areas, ambulance turnaround, and maintenance operations. The unit area must be sufficiently large enough to permit dispersion and to use the cover and concealment available at the location. Further, PVNTMED considerations (health hazards, such as presence of disease vectors, contamination, or other field hygiene and sanitation issues) need to carefully assessed.

m. Level of Planning. Planning for is the key to mission success and the safe operation of the unit. Planning includes more than the planning required to support the tactical plan. Every phase of the operation requires detailed and continuous planning to ensure that deployment, mission execution, and redeployment are accomplished in the most efficient and safe manner possible. For example, if the unit field sanitation plan is not developed and executed, combat ineffectiveness can result from the spread of disease and contamination.

n. Complexity of Movement. When a unit is deploying or redeploying, a number of transportation means may be used to accomplish the move (such as by rail to a port of embarkation, by ship to the port of debarkation, or by convoy from the port of debarkation to the operational area). Each of these modes of transportation have special requirements to ensure that the personnel, vehicles, and equipment are safely transported from one point to another. The commander must evaluate the plan for the move, assess the hazards it presents, and institute controls to ensure the move is accomplished in a safe manner. This same planning and hazard assessment is required for moves of much smaller scope (using one transportation means, such as ground ambulances). An example is the forward-siting corps of ground ambulances at the Echelon II facility in the division rear.

o. Adequacy of Directions Given. Leaders must always ensure that the directions they give are clear and complete and that the soldiers receiving the directions understand what they are expected to do. Accidents, substandard job performance, and mission failure can result if the personnel performing the tasks do not understand what they are to do, when they are to do it, and how they are to do it.

APPENDIX M

MULTINATIONAL OPERATIONS

M-1. General

Multinational operations are those military actions which encompass two or more countries. These operations serve two purposes. First is the simple combination of numbers. Countries associate themselves in military operations to bring their separate military forces together into a more powerful combined force. Increasingly, however, multinational operations serve a political purpose. Their combined efforts lend legitimacy to the enterprise, demonstrating broad international approval of the operation. For example, in the Persian Gulf War of 1991 (Operation DESERT STORM), even token military contributions by small countries added their moral and political backing to the international effort to force Iraq out of Kuwait.

M-2. Alliances and Coalitions

There are two types of multinational forces: alliances and coalitions. These forces must create a structure that meets the needs, diplomatic realities, constraints, and objectives of the participating nations.

a. Alliances. Alliances are long-standing agreements between or among nations for the attainment of broad, long-term objectives. An example of an alliance is the NATO.

b. Coalitions. Coalitions, on the other hand, are *ad hoc* agreements between two or more nations for a common action (the attainment of a short-term objective).

M-3. Command Structure of Multinational Forces

a. Alliances.

(1) Alliances are characterized by years of cooperation among nations. In alliances—

- Agreed-upon objectives exist.
- Standard operating procedures have been established.
- Appropriate plans have been developed and exercised among the participants.
- A developed TO exists, some equipment interoperability exists, and command relationships have been firmly established.

(2) Alliances are normally organized under an integrated command structure that provides unity of command in a multinational setting. The key ingredients in an integrated alliance command are that a single commander will be designated, that his staff will be composed of representatives from all member nations, and that subordinate commands and staffs will be integrated to lowest echelon necessary to accomplish the mission. Figure M-1 depicts a multinational alliance under an integrated command structure.

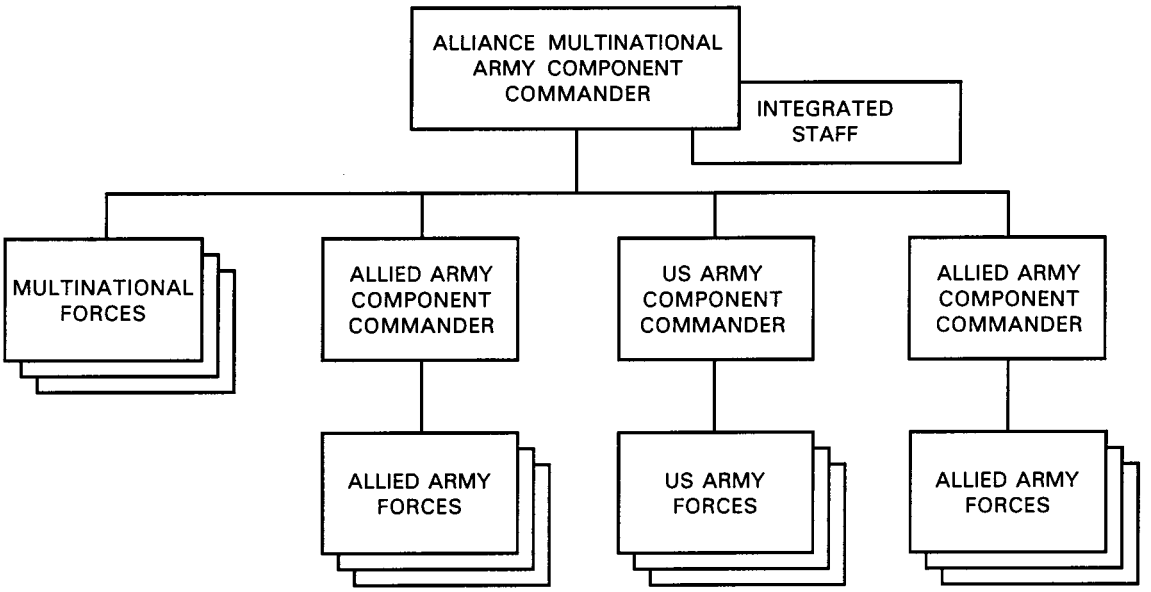

Figure M-1. Multinational army command structure alliance (national subordinate formations).

(3) Another form of alliance is the lead nation command structure. This structure may exist in a developing alliance when all member nations place their forces under the control of one nation. This means that the lead nation's procedures and doctrine form the basis for planning and coordinating the conduct of operations. Although this type of arrangement is unusual in a formal alliance, such a command structure may have advantages under certain treaty circumstances. A lead nation command in an alliance may be characterized by a staff that is integrated to the degree necessary to ensure cooperation among multinational or national subordinate army formations.

b. Coalitions. Coalitions are normally formed as a rapid response to an unforeseen crisis and, as stated above, are *ad hoc* arrangements between two or more nations for a common action.

(1) During the early stages of such a contingency, nations rely upon their military command systems to control the activities of their forces. Therefore, the initial coalition arrangement will most likely involve a parallel command structure (Figure M-2). Under a parallel command, no single multinational army commander is designated. Usually member nations retain control of their national forces. Coalition decisions are made through a coordinated effort among the participants. A coalition coordination, communications, and integration center (C3IC) can be established to—

- Facilitate exchange of intelligence and operational information.
- Ensure coordination of operations among coalition forces.
- Provide a forum for resolving routine issues among staff sections.

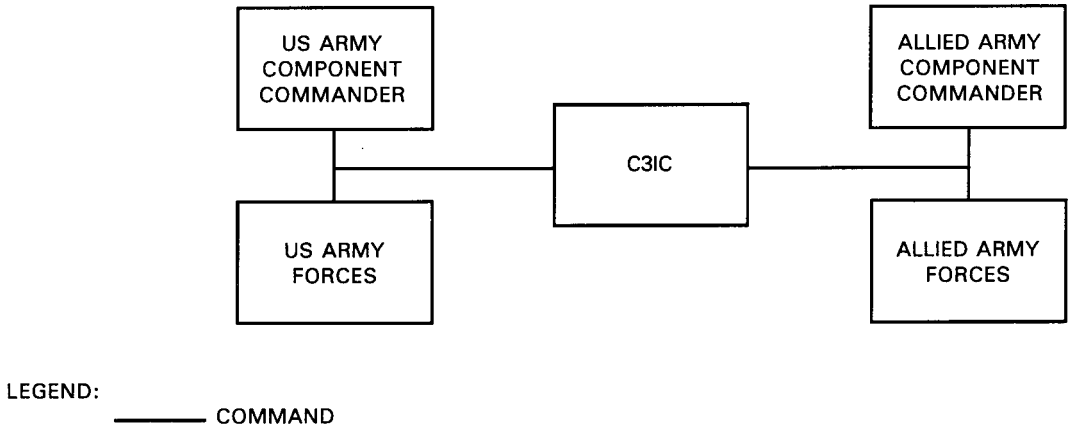

Figure M-2. Coalition parallel command structure (forces under national control).

(2) As a coalition matures, the members may choose to centralize their efforts through establishing a lead nation command structure (Figure M-3). A lead nation command is one of the less common command structures in an *ad hoc* coalition. A coalition of this makeup sees all coalition members subordinating their forces to a single partner, usually the nation providing the preponderance of forces and resources. Still, subordinate national commands maintain national integrity. The lead nation command establishes integrated staff sections, with the composition determined by the coalition leadership.

M-4. Rationalization, Standardization, and Interoperability

One of the most difficult aspects of multinational operations concerns the rationalization, standardization, and interoperability (RSI) (defined in Glossary) of equipment, supplies, and procedures. This task is compounded by differences in terminology, language, and doctrine.

a. Communications. To ensure mission success, it is imperative that communications are quickly established with all participating nations.

(1) Initial communications can be facilitated by exchanging liaison officers or teams who will provide direct interface with the participating nations. When possible, liaison personnel should be deployed early in the planning/organization phase of the operation.

(2) Compatible communications equipment may pose a severe problem for the multinational force. Even within joint operations, the US experiences interoperability problems with communications equipment; these difficulties are magnified when US forces are engaged in multinational operations. Depending upon the size of the multinational force, one nation may be required to provide communications equipment to all elements for C2 purposes. The planning for and effective use of messengers and wire communications may also assist in alleviating this situation.

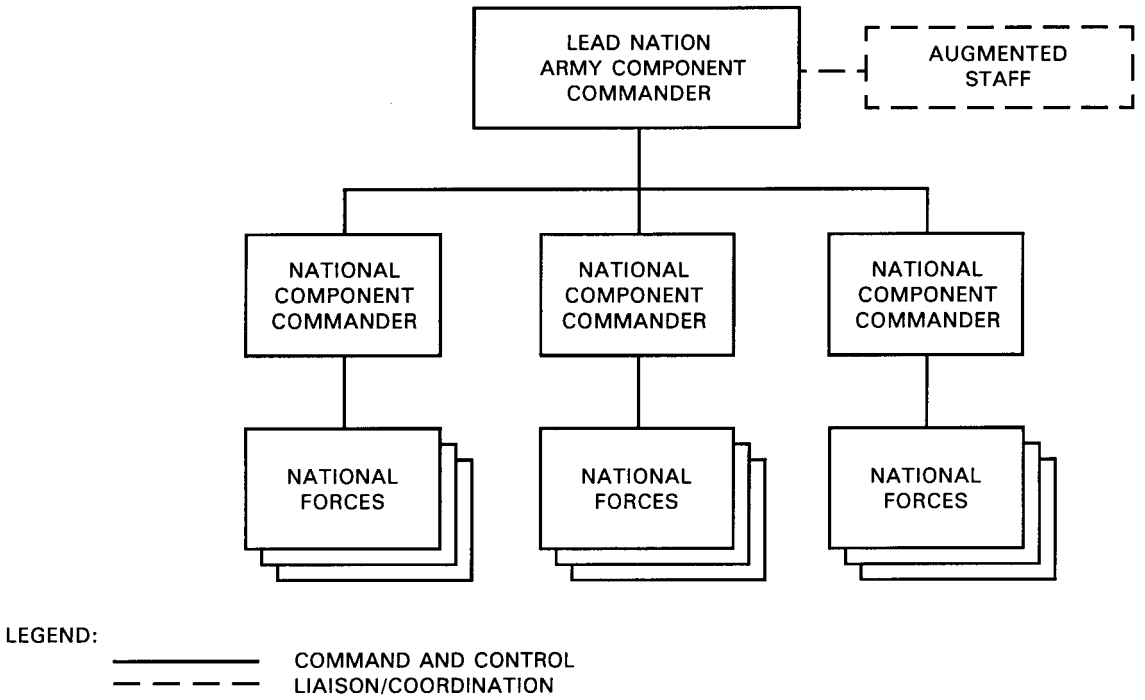

Figure M-3. Lead nation command structure (augmented staff and multinational subordinate formations).

b. Standardization. Within alliances, standardization can be accomplished in many areas. The specifications and requirements for equipment, treatment protocols, and procedures can be developed by working groups and adopted for use by each nation. An example of this is the NATO standard litter which can be interchangeably used in all ambulances employed by the member nations. In coalitions there is not sufficient time permitted to reach standardization agreements of this nature. Due to the short duration and limited purpose of these arrangements, there is usually only sufficient time to standardize principles and time-sensitive procedures, such as report formats or radio frequencies to be used, rather than materiel development issues.

c. Command and Control. As coalitions are *ad hoc* agreements of countries sharing a common interest, it may not be possible to establish C2 over all participants. Each nation may have its own specific requirements which limit the authority it will permit international or national commanders to exercise over its forces. Thus, command in the formal sense may not exist, and a system of cooperation may be required in its place. Hasty agreements must be made to formulate workable methods. These are always specific to the situation and must be decided by commanders and staffs, taking into consideration the mission, requirements, and capabilities of the participating forces.

M-5. Combat Health Support Issues

The US military has a sophisticated, state-of-the-art field health care delivery system. When engaged in multinational operations, the US may be called upon to provide health care to the forces of allied or coalition partners engaged in the ongoing operation. The US will always provide CHS to its own deployed conventional forces. Factors that may impact on the delivery of this care include—

a. Eligible Beneficiaries. Early in the CHS planning process, a determination must be made as to who will be eligible beneficiaries for care in US MTFs. This determination should be made at the highest possible level, with the advice of the staff judge advocate, as it will impact on the medical force structure to be deployed and the expenditure of funds on Class VIII materiel required to support the eligible population.

b. Funding. The funding and/or reimbursement aspects of the operation should be clearly delineated at the outset of the operation. Multinational operations are often conducted under the auspices of nongovernmental agencies, such as the United Nations. The CHS planner must know what the mechanisms for reimbursement are and what methods of resupply are to be used.

c. Differences in Languages. Interpreters will be required to assist medical personnel in treating soldiers from other nations who do not speak English. Department of the Army Pamphlet 40-3 provides basic medical questions and responses in the languages of the NATO members, but must be supplemented by locally produced guides for languages not included.

d. Endemic Disease. When treating soldiers from other nations, the health care provider must be familiar with the endemic diseases in the soldier's native homeland. These diseases may or may not be endemic in the AO or in CONUS. Treating soldiers with varying endemic diseases may require medications not normally stocked by the treatment element. As these diseases may not be familiar to the health care providers, additional consultation with specialists may be required.

e. Religious and Cultural Differences. Religious and cultural differences will exist between the different forces. Health care providers must be aware of any cultural norms or religious beliefs which affect the delivery of health care. These differences may be encountered in areas such as the use of blood and blood products or dietary restrictions. By the health care provider being aware of and considering these cultural differences and religious beliefs, cooperation of the patient for the treatment regime may be facilitated.

f. Weapons of Mass Destruction Threat. Each nation will have different methods and materials for safeguarding their troops from the effects of WMD (to include NBC). This may result in different levels of protection for the various forces participating in the operation. The CHS planner must consider the various levels of protection to ensure that adequate health care support can be provided in the event that WMD are employed.

M-6. Combat Health Support Considerations

a. The CHS commander and command surgeon will be required to establish policies and procedures which will effect the type and quantity of CHS available to the participating forces.

b. Although this manual is primarily concerned with medical evacuation operations, this paragraph provides CHS considerations for each of the medical functional areas (except C2). Considerations in one area may affect the patient evacuation and medical regulating functional area. As a minimum, the following factors should be considered—

(1) *Patient evacuation and medical regulating*.

- The evacuation policy for the theater/operation must be established during the initial planning phase; much of the CHS force structure to be deployed is dependent upon this policy.

- It must be established who will perform medical evacuation missions and what assets (platforms and personnel) will be used. (Is one nation the primary evacuator or will each nation evacuate their own patients?)

- It must further be determined where patients from the different member nations will be evacuated to (such as to the nearest facility regardless of nationality or to a facility established by their own nation).

- The communications interface (type of radio, frequency, and request format) must be standardized to facilitate the receipt of the request and expedite the dispatch of the evacuation platform.

- Additional policies may be required on the exchange of litters, blankets, and other types of medical equipment accompanying the patient, on the backhaul of Class VIII and blood on ambulances, and on transferring a patient from one nation's evacuation system to another.

- Procedures for the marking of LZs and identification of requesting units (such as the use of colored smoke) must be standardized.

- Security requirements (passwords or other identification means) for ambulances entering another nation's base camp to acquire patients may be required.

(2) *Hospitalization*. The array of hospital assets within a TO or deployed for an operation is dependent upon the nature and duration of the operation, the anticipated patient workload, and the theater evacuation policy. In multinational operations, it needs to be determined which nations will provide hospitalization and, once that is established, what capabilities these assets have. Standards of medical care, credentialing, scope of practice, and ancillary care available will differ between participating nations. A clear understanding of the medical capabilities of each nation's facilities is an essential requirement for the CHS planner to ensure that a duplication of services does not occur and that all elements of care are provided for. Further, the participating nations must establish at what point a patient within the health care delivery system of one nation will be returned to his own nation's system.

(3) *Combat health logistics, to include blood management*. Different nations have different standards for collecting and testing blood as well as for the production of pharmaceuticals and medical equipment. Due to the stringent regulation of blood and blood products and the production of pharmaceuticals in the US, these Class VIII items will normally only be procured through the US forces Class VIII

system for use with US troops. Funding and reimbursement mechanisms must be identified and formalized if the US Class VIII system is used to resupply other nations' MTFs.

(4) *Preventive medicine services*. Preventive medicine programs are essential in reducing morbidity and mortality due to DNBI. In a multinational force, the PVNTMED personnel must be familiar with the cultural and religious differences of the participating nations. Field sanitation and personal hygiene practices are not universally the same in all nations; in some nations, these practices do not exist. To ensure that endemic diseases of a particular nation are not introduced to the other participating forces, disease surveillance, pest management, and personal protective measure programs must be initiated and enforced. Inspection of bivouac areas, feeding facilities, potable water supplies, and waste disposal and sanitation facilities must be an ongoing effort. In addition, ensuring that operations are in compliance with federal, state, local, and HN environmental laws, regulations, policies, and standards will help to prevent an imbalance from occurring in the ecosystem.

(5) *Dental services*. Dental services within the multinational force may be the responsibility of each participating nation. If care is to be provided by one nation, it would normally only consist of emergency dental procedures to provide for the immediate relief of pain and discomfort.

(6) *Area medical support*. A comprehensive plan must be established to ensure that all participants have access to medical care and services. Whether one nation provides all of the essential services or each nation is responsible for its own care (or some combination of the two), a comprehensive plan which delineates the access to and interconnectivity of support must be provided. Units or elements without organic CHS resources must receive Echelons I and II support on an area support basis and these support requirements must be incorporated into the supporting units' OPLAN.

(7) *Veterinary services*. The AMEDD is the DOD Executive Agent for Veterinary Services within the US Army. Its missions of ensuring food wholesomeness and quality and providing medical care to government-owned animals are an essential service in stability operations and support operations. The US forces may have the only deployable veterinary resources and may be required to perform their missions for the entire multinational force.

(8) *Combat stress control*. Combat stress control activities may be the responsibility of each nation as the language barrier between nations may adversely impact on consultations and treatment.

(9) *Medical laboratory support*. Depending on the anticipated duration of the operation, medical laboratory support above the organic level may not be available within the theater. Procedures for the collection and transfer of specimens/samples of suspect BW and CW agents must be standardized.

APPENDIX N

LEADER CHECKLISTS

This appendix provides sample checklists for use by unit leaders.

N-1. Sample Format of a Command Post Operations Checklist

The CP is the CHS commander's principal facility for the C2 of his unit's operations.

a. General.

____ Command post is established and staffed by the battalion's HHD.
____ Executive officer ensures CP's smooth operation and commander's ability to track required information.

b. Purpose of the Command Post.

____ Receive, analyze, and disseminate information critical to the success of the battalion mission.
____ Use journal, situation map, and information displays.

c. Establishment and Security of the Command Post.

____ Establish barriers (concertina wire) and provide security for CP.
____ Control access of personnel into the CP.
____ Establish an entry/exit log.
____ Establish communications with higher, adjacent, and subordinate headquarters.

d. Journal.

____ Official chronological record of events of a unit or staff section during a specific period of time.
____ Always maintain a journal unless otherwise directed by the commander.
____ Maintain the journal on DA Form 1594.

NOTE

DO NOT write "logged" as a description of action taken.

e. Situational Map.

____ Graphic presentation of current situation.
____ Minimum overlays on the map include—
  ____ Operations.
  ____ Obstacles/barriers.
  ____ Combat service support.
  ____ Combat health support (such as location of MTFs, medical units, evacuation assets, AXPs, Class VIII points, and supported units).

NOTE

Symbols used on overlays will be those authorized in FM 101-5-1.

____ The S2/S3 or S2/S3 NCOIC ensures all overlays remain up to date.

f. *Informational Display*. Informational display is a chart depicting information the commander considers critical, such as—

____ Task organization.
____ Mission (unit's and unit's higher headquarters).
____ Intent.
____ Operations sketch.
____ Medical evacuation status.
____ Weather and light data.
____ Personnel status.
____ Equipment status.
____ Class VIII status.
____ Sensitive items.
____ Communications status.
____ Combat health support units and facilities.
____ Other information the commander deems appropriate.
____ Base defense plan.

g. *Importance of Journal, Situation Map, and Information Display*.

____ Remember the effect of the information from these three sources on the success of the operation.
____ Information mindlessly recorded and annotated does not provide assistance.

h. *Staffing*.

____ Man the CP 24 hours per day.
____ Ensure minimum of two personnel in CP at all times.
____ Uniform inside the CP is battle dress uniform (BDU) and protective mask; ground all other equipment.
____ Clear and store weapons in the weapons rack.
____ Place sensitive items on top of the rack.
____ Establish rest plan.

i. *Police*.

____ Maintain CP in a high state of police.
____ Ensure table tops are cleared unless being worked on.
____ Clear area immediately when work is completed.
____ Report depleted supplies to the NCOIC.

j. Classified Documents.

____ Secure all classified documents in locked container when not in use.
____ Control access to classified documents.
____ Do not leave unattended classified documents lying on desk tops.

N-2. Site Selection and Establishing Unit Area Checklist

a. Site Selection Considerations.

____ Coordinate site selection and receive approval from the appropriate headquarters.
____ Anticipated length of occupancy of the location.
____ Accessibility for ground and air evacuation platforms (such as near major road networks and accessible from different directions).
____ Away from lucrative military targets.
____ Near expected areas of patients density.
____ Is the site large enough to permit dispersal of the unit, ambulance turnaround, establishment of LZ, and augmentation reinforcement, if required?
____ Does the site selected provide good hardstand and drainage?
____ What is the impact of the site on communications equipment and capabilities.
____ How much cover and concealment does the site provide?
____ Is there sufficient space downwind from the unit area to establish an LZ for contaminated aircraft?
____ Is the site easily defensible?

b. Establish the Unit Area.

____ Commander finalizes external layout plan.
  ____ Establishes perimeter defense.
  ____ Establishes CP.
  ____ Determines traffic pattern which facilitates the movement of vehicles and equipment and avoids cross-traffic intersections.
  ____ Identifies ambulance turnaround points.
  ____ Identifies and establishes helicopter LZs (conventional and NBC contaminated) which avoid takeoffs and landings over established unit areas.
  ____ Determines location of field sanitation facilities.
  ____ Establishes motor pool area.
  ____ Establishes field feeding site, if appropriate.
  ____ Establishes bivouac area.
  ____ Camouflages area when directed by appropriate authority (STANAG 2931).
  ____ Commander finalizes internal layout plan.
  ____ Determines a traffic pattern which facilitates the movement of vehicles, equipment, and personnel.
  ____ Adjusts the location of operating sections to improve work flow or security.
  ____ Establishes communications.
  ____ Establishes unit and medical support areas.

N-3. Precombat Checklists

a. General Considerations.

____ Leader receives the mission from the next higher headquarters.
- ____ Clarifies any questions.
- ____ Coordinates with next higher headquarters as required.

____ Leader conducts mission analysis.

____ Leader produces the—
- ____ Restated mission statement.
- ____ Tentative time schedule.

____ Leader issues a warning order.

____ Unit members perform readiness, maintenance, and functional checks under the supervision of unit leaders.
- ____ Medical equipment sets.
- ____ Vehicles/aircraft/generators.
- ____ Night vision devices.
- ____ Communications equipment.
- ____ Weapons and ammunition.
- ____ Field sanitation equipment and supplies.
- ____ Any special equipment (such as hoist and forest penetrator).
- ____ Common table of allowances (CTA) equipment.

____ Leader makes a tentative plan.
- ____ Uses estimate of the situation to depict plan of support.
- ____ Develops COAs.
- ____ War games COAs.
- ____ Determines best COA.

____ Leader completes his plan.

____ Leader issues OPORD.

____ Leader uses sand table or sketches to depict plan of support.

____ Leader or high designated representative affects coordination for the mission.
- ____ Support requirements.
- ____ Current intelligence (to include medical threat) update.
- ____ Control measures.
- ____ Communications and signal information.
- ____ Time schedule.

____ Leader receives attachments/augmentation, if appropriate.
- ____ Attachments are oriented to unit.
- ____ Attachments are briefed on the mission.

____ Leader supervises CHS mission preparation.
- ____ Key leaders brief back unit leader.
- ____ Key personnel rehearsals are conducted.
- ____ Unit leaders—
  - ____ Supervise.
  - ____ Inspect.
  - ____ Ensure adequate security.

____ Conduct brief backs.
____ Rehearse.
____ Continue coordination.

____ Unit plans for support of combat operations.
____ Analyze—
____ Patient acquisition and medical evacuation requirements.
____ Area support requirements.
____ Requirements for water, Class VIII, and other supply classes.
____ Requirements for NBC defense.
____ Transportation requirements.

____ Unit leaders—
____ Execute a work/rest plan based on work priorities and statutory (crew rest) requirements.
____ Monitor current situation.
____ Issues appropriate fragmentary orders (FRAGOs) based on intelligence or operational updates.
____ React to messages or orders from higher headquarters.
____ Execute any actions and coordination resulting from change.

____ Unit headquarters remains current on positions and missions of higher, adjacent, and subordinate units.

b. *Precombat Checklist for Ground Ambulances*.

____ Authorized MES are on hand.
____ Medical equipment is complete and serviceable.
____ Authorized medical gases (oxygen) are on hand and serviceable.
____ Authorized medications are on hand and current.
____ Packing list is available.
____ Strip maps and/or road maps are available (with overlays).
____ On vehicle equipment (OVE) is on hand.
____ Log book is present and current.
____ All drivers are licensed.
____ Situational awareness equipment (position locator) is on hand and serviceable.
____ Communications equipment is on hand and serviceable and set to correct frequency.
____ Medical unit identification markers (in accordance with the Geneva Conventions) are displayed.

NOTE

Markers are red on a white background only; camouflaged or subdued markers are not authorized.

c. *Precombat Checklist for Air Ambulances* (*Medical Aspects Only*).

____ Authorized MES is on hand.

____ Medical equipment is complete and serviceable.
____ Authorized medical gases (oxygen) are on hand and serviceable.
____ Rescue hoist and forest penetrator are installed, if required.
____ Authorized medications are on hand and current.
____ Medical unit identification markers (in accordance with the Geneva Conventions) are displayed.

d. Precombat Checklist on Nuclear, Biological, and Chemical Equipment.
____ Individual protective equipment is on hand and serviceable. (One set is issued; the other maintained in support.)
____ Protective masks are issued and serviceable.
____ Nerve agent antidote is available and distributed, if required.
____ Convulsant antidote for nerve agent is available and distributed, if required.
____ Decontamination apparatus is completed and serviceable.
____ Basic load of decontamination supplies is on hand.
____ Chemical agent alarms are on hand and serviceable.
____ M256A1 detector kits are issued.
____ Nuclear, biological and chemical contamination marking kits are distributed.
____ Chemical agent monitors are on hand, if authorized.
____ Replacement filters for protective masks are on hand.
____ Biological and chemical warfare agents prophylaxis and/or immunizations have been accomplished, if appropriate.
____ Nerve agent pretreatment packets are available.
____ Radiac sets are on hand.

e. Precombat Checklist for Miscellaneous Equipment.
____ Inspect binoculars.
____ Inspect camouflage nets and support systems, if appropriate.
____ Inspect night vision devices.
____ Ensure batteries are on hand and serviceable.
____ Inspect tentage.
____ Inspect global positioning systems, if available.

f. Precombat Checklist on Personnel.
____ Ensure soldiers are in the correct uniform.
____ Ask questions to ensure that soldiers have been briefed on mission and situation.
____ Implement appropriate MOPP level.
____ Check for drivers licenses.
____ Brief soldiers on operations safety and environmental injuries.
____ Individual equipment is on hand and stowed properly.
____ Soldier has eaten and is briefed on future field feeding.
____ Identification cards and tags are on hand and serviceable.
____ Camouflage self and equipment, if required.
____ Work/rest plan (to include crew rest) is implemented.
____ Water discipline plan is implemented, if appropriate.

g. *Precombat Checklist on Communications Equipment.*

____ Radios are operational (communications check completed).
____ Telemedicine equipment is available and operational, if available.
____ Speech security equipment functions, if available.
____ Frequencies are set.
____ Matching units are operational.
____ Antennas are tied down properly.
____ Connectors are clean and serviceable.
____ TA-312 is on hand and serviceable, if appropriate.
____ Batteries are on hand and charged.
____ Manpack sets are complete.
____ Switchboard is on hand and serviceable.
____ WD-1 is on hand and serviceable.
____ Antennas and remotes are present and serviceable.
____ Signal operating instructions are available and secured.
____ Call signs, frequencies, and challenge passwords have been disseminated.
____ Perform communications check again.

h. *Precombat Checklist for Vehicles.*

____ Loads are according to load plan; load plan is posted in the vehicle.
____ Hazardous cargo is properly identified and stored toward the rear of the vehicle for easy access and inspection.
____ Ammunition is issued and properly stored.
____ Vehicle fuel tank is topped off.
____ Package POL products and small arms lubricant are present.
____ Water cans are full.
____ Meals, read-to-eat are issued and stowed.
____ First-aid kits are present and complete.
____ Operator's manuals and lubrication orders are present for the vehicle, radios, and associated equipment.
____ Critical OVE and basic issue items are present.
____ Vehicle dispatch is complete.
  ____ DA Form 2404 is complete.
  ____ No deadline deficiencies exist.
____ Before operation, PMCS has been completed.

i. *Precombat Checklist for Individual Weapons.*

____ Clean and functional.
____ Cleaning tools/kits, bolts, and ruptured cartridge extractors are present.
____ Range cards are on hand.
____ Ammunition is issued, accounted for, and secured.
____ Magazines are issued.
____ Blank adapter installed, if appropriate.
____ Function check performed.

APPENDIX O

COMBATTING TERRORISM AND FORCE PROTECTION

O-1. General

a. Preventive and protective security measures should be taken by military units and individual soldiers to protect themselves and their ability to accomplish their mission while deployed. These measures include OPSEC, COMSEC, and antiterrorism considerations. The commander develops an antiterrorism plan to institute passive defense measures. The commander must constantly evaluate security plans and measures against the terrorist threat in order to effectively identify security requirements.

b. Terrorism can occur within the US or overseas. Commanders must remain vigilant regardless of where the unit is physically located. Unit training should include orientation to the terrorist threat and countermeasures to be taken at both the individual and unit level.

c. For an in-depth discussion of CHS for combatting terrorism operations, refer to FM 8-42.

O-2. Combatting Terrorism

a. Terrorism is defined as the unlawful use or threatened use of force or violence against people or property to coerce or intimidate governments or societies, often to achieve political, religious, or ideological objectives. Combatting terrorism consists of those actions (including antiterrorism and counterterrorism) taken to oppose terrorism.

b. Antiterrorism consists of those defensive measures used to reduce the vulnerability of personnel, family members, facilities, and equipment to terrorist acts. This includes the collection and analysis of information to accurately assess the magnitude of the threat. (For the collection of medical information, refer to FMs 8-10-8 and 8-42.)

c. Counterterrorism is comprised of those offensive measures taken to prevent, deter, and respond to terrorism. Combat health support elements are not directly involved in the counterterrorism aspects of an operation. However, CHS elements provide traditional CHS to US and friendly forces engaged in these operations.

O-3. Terrorism Considerations

a. As commanders and staffs address terrorism, they must consider several relevant characteristics of terrorists and their activities. The first consideration is that anyone can be a victim. (Some terrorists still operate under cultural restraints, such as a desire to avoid harming women, but the planner cannot count on that.) Essentially, there are no innocents. Secondly, attacks which may appear to be senseless and random are not. To the perpetrators, their attacks make perfect sense. Acts, such as bombing public places of assembly and shooting into crowded restaurants, heighten public anxiety. This is the terrorists' immediate objective. Third, the terrorists need to publicize their attack. If no one knows about it, it will not produce fear. The need for publicity often drives the target selection; the greater the symbolic value of the target, the more publicity the attack brings to the terrorists and the more fear it generates. Finally, a leader

planning for antiterrorism must understand that he cannot protect every possible target all of the time. He must also understand that terrorists will likely shift from more protected targets to less protected ones. This is the key to defensive measures.

b. Medical units have specific protections afforded to them under the provisions of the Geneva Conventions. The CHS commander must understand that these protections probably will not be recognized nor adhered to by terrorist elements. The CHS commander in developing his force security plan should not consider the Geneva Conventions as a protection from attack by terrorist elements.

c. Terrorists rely on surprise and the victim's confusion at the time of the incident. Antiterrorism involves physical security, OPSEC, and the practice of personal protective measures by all personnel. Commanders and staffs must plan their response to terrorist threats and incidents. Combatting terrorism is an aspect of force protection and is the responsibility of commanders at all levels at all times. Properly planned and executed, the Army antiterrorism program will reduce the probability of surprise while discouraging attack by raising the risk to the attackers.

O-4. Antiterrorism Assessment

The commander and his staff complete a thorough assessment, using METT-TC and political planning factors in developing a security assessment to determine the unit's vulnerability to terrorist activities. The assessment is situationally dependent; the commander should develop his own listing of considerations. Assessment considerations include, but are not limited to—

a. *Mission.* An assessment of the mission is conducted to identify vulnerabilities.

- What type of mission is to be conducted? (*This includes the primary and any secondary missions the unit is tasked with. Examples of types of missions are conventional support to combat forces; humanitarian assistance; disaster relief; domestic support; peace support; or nation assistance.*)

- Where is the mission to be performed? (*The mission may be conducted at the home station* [*either CONUS or outside continental United States* (*OCONUS*)]). *The actual physical location and available security should also be considered, such as within a secure compound or area; in the civilian community* [*local villages, remote sites; or in the countryside*]*; or in a field environment.*)

- Is the entire unit operating together in the same location? (*The dispersion of unit operations is a significant consideration. The more dispersed the unit is, the more difficult the task of providing adequate security. Are all of the operations being conducted in the headquarters area? Are ambulance teams being dispatched to unprotected locations* [*such as outside of the secured area*]*? Are ambulance teams field sited with forward units?*)

- Is the unit part of a CHS TF which deployed prior to the entry of combat and CS forces? (*Is the area where the unit is deployed considered to be friendly? Are other CSS units operating within the area? Are there any other US, allied, or coalition forces which can provide security for CHS units?*)

- Is the unit tasked to provide medical evacuation support to mass casualty situations? (*Is the unit included in the rear area protection plan? Will the unit provide medical evacuation support to civilian mass casualty situations? In mass casualty operations resulting from a terrorist incident, what is the potential for a follow-on attack* [*such as another bomb planted to go off during rescue efforts*]*?*)

- Once deployed, does the unit mission change? (*Is there the potential for a peacetime mission to transition to more conventional CHS to combat forces* [*a deteriorating political and economic situation during a nation assistance operation may result in civil unrest with the HN requesting additional US forces to perform a peacekeeping/peace enforcement type of operation; as additional US forces are deployed, the in-country CHS elements transition from the nation assistance operation to conventional support for the deployed US forces*]*? Are the in-county CHS resources more vulnerable to being targeted by terrorists during the transitional phase?*)

- Are air ambulance assets supporting civilian and/or HN populations? (*Are the aircraft required to land at civilian and/or unprotected airstrips? Do air ambulances need security escorts? Is there a potential for attack of air assets by terrorist or terrorist groups?*)

- How are medical evacuation requests authenticated? (*What is the potential for receiving false evacuation requests to lure air or ground evacuation assets from secured areas?*)

b. Enemy (*Opposition Groups or Terrorist Factions*). In assessing the terrorist threat, the commander must consider all persons, groups, or organizations that potentially pose a terrorist threat. He must also consider whether these persons, groups, or organizations are active within the geographical area the unit is located or the mission is conducted. Considerations include—

- Who are the potential terrorists? (*This includes a myriad of people, groups, and organizations; the basis for affiliations can be anything of common interest such as race, ethnicity, labor/ profession, and the hatred of a person, group, or country or the persons/groups/organizations may be sponsored by a nation state.*)

- What is known about the terrorists? (*This can include what their grievances are, how are they funded, how sophisticated is their organization, how they evade capture, what weapons do they have access to, or other similar information.*)

- How do the terrorist receive information? (*The sources of information the terrorist uses may give an indication as to the sophistication of their organization and their potential targets. Do they rely on public information sources* [*radio, television, and newspapers*]*, or do they have private sources of information such as infiltrating public service organizations* [*for example, the police, armed forces, or public utilities*]*, or do they receive intelligence from state-sponsored sources?*)

- How might the terrorists attack? (*Think like the terrorists. Will they ambush or conduct raids? Will they use snipers, mortars, rockets, air and ground attacks, suicide attacks, firebombs, or bicycle, car, or truck bombs? Will they use WMD to include BW and CW agents?*)

- What is the perceived terrorist threat for use of violence? (*What is the probability the terrorists will use violence?*)

- Does the unit have routines or published operating hours? (*Do the ambulances have routine routes that they follow? Do the ambulances provide support on a recurring basis to certain events? Could a terrorist predict where the unit personnel and equipment/vehicles will be at a certain time on a certain date?*)

- Will an attack gain sympathy for the terrorists? (*What is general feeling of the local population concerning US military personnel, units, and equipment/vehicles/aircraft involvement in the local area? Are US forces more likely to be targeted than a civilian agency, organization, or facility?*)

c. *Terrain*. The suitability of the terrain over which the unit is established and will conduct its mission may a have significant impact on the ability of the unit to protect itself.

- What are the strengths/weaknesses of the unit area and local surroundings? (*This includes the traditional concerns of site selection to ensure that the area the unit is established in affords protection from its natural surroundings* [*cover, concealment, and defilade*]. *In an urban setting, considerations such as how far buildings are located from streets that have public access are of extreme importance. The bombings of the billets in Dhahran and the Embassies in Kenya and Tanzania attest to the vulnerability of locations that do not have sufficient space to adequately protect the buildings and personnel from car and/or truck bombs*.)

- What are the avenues of approach? (*Again, this pertains to both the field environment and the urban location. As the unit limits the number of avenues of approach, it can more easily defend its perimeter. Also, the unit should limit entry and exit points to the unit's AO, as well as screen personnel desiring to gain entry. In an urban setting, is it possible to block streets running adjacent to the property used by US forces?*)

- Are there tall buildings, water towers, or terrain, either exterior or adjacent to the perimeter, that could become critical terrain in the event of an attack? (*Can overlooking buildings or towers be cleared and access to them denied? Are there any likely sniper positions in or overlooking the operational area? In an urban area, if possible, determine who owns and/or rents adjacent properties and if they have any affiliation to terrorist or paramilitary groups*.)

- When teams must be deployed to outlying areas to accomplish their mission, what is the condition of the roads and terrain that must be traversed (such as paved roads or unimproved dirt tracks) and what is the potential for attack while in transit? (*Do ambulance teams need security escorts in some areas? Have potential evacuation routes been reconnoitered? Are ambulance crews familiar with the proposed routes? Are there alternate routes rather than having to traverse extremely rugged terrain* [*rugged terrain requires reduced speeds which in turn makes ambulances more vulnerable to attack*]*? What is the potential for encountering mined areas?*)

- Where are recreational areas located within a secure compound or in the civilian community? (*Do soldiers have to leave secured areas for recreational purposes? Are recreational events/ tournaments* [*such as baseball and football games*] *advertised to the public indicating date, time, and location? Are recreational areas controlled by military or civilian agencies/organizations? Are social events held in civilian facilities* [*restaurants/clubs*]*? How well advertised are the events? Are measures*

taken to ensure that only invited guests are permitted entrance? Do parking areas have security and/or limited access? Does the composition of the guest list raise the vulnerability for terrorist attack [*such as senior ranking officers, civilian politicians, or other notables assembled in a specific area at a specific time*]*?*)

d. Troops. The troop factor includes both the military aspects and the personal aspects of the deployed troops. Unit security is an important factor, however, when considering passive defense measures to counter the terrorist threat, considerations concerning the individual soldier (and his family) is of equal importance.

- Has the individual soldier been oriented to the terrorist threat? (*The individual soldier must be aware of personal protective measures that he can take to make himself less vulnerable to terrorist activities* [*such as varying his schedule and the routes he uses going to and from work*]. *Further, he should receive orientation and/or training in his role in antiterrorism activities, mass casualty situations, terrorist bomb awareness and protective measures, what to do if the unit is a target of a terrorist attack, dealing with bystanders to a terrorist incident, and how to talk to terrorists or hostage takers until law enforcement personnel are available.* ***NOTE:*** *The soldier's family should also receive orientation to the terrorist threat and actions required to protect themselves. In areas with a high risk of terrorist activities, assessment of the threat to the family should include, as a minimum, the housing areas, schools, and shopping areas.*)

- Determine what the friendly situation is? (*What organic resources are available for force protection? Are there other US forces in the AO who can provide security for CHS units/personnel? Are there engineers in the AO who can assist in area preparation* [*erecting barriers, removing mine fields, preparing bunkers, or establishing other security facilities*]*? Are MWD teams available to conduct searches for explosive materials in the unit area? What are the HN responsibilities, capabilities, and attitudes toward providing assistance? What are the rules of engagement* [*ROE*]*?*)

e. Time. Time is important as it dictates the extent of security measures to be taken and the potential vulnerability of the unit and the individual soldier.

- What is the duration of the operation? (*The longer the duration of the operation, the more permanent the security fortifications* [*such as bunkers, barriers, fences, and exterior lighting*] *can be made. Further, the longer the duration of the operations, the more resources* [*combat, CS, and CSS personnel/units and equipment*] *will be available for support. The negative side of a lengthy operation is that the more likely routines will be established and the behavior* [*of individuals and the unit*] *can be predicted.*)

- Are there time constraints? (*Missions that are conducted under significant time constraints may result in an inadequate preparation of security measures thereby increasing vulnerability. Further, the type of operation to be conducted may increase the vulnerability of the force* [*such as a NEO conducted in a hostile environment*] *as well as provide a lucrative target for the terrorist.*)

f. Civilian Considerations. Civilian considerations are one of the most significant categories to consider in combatting terrorism. The civilian community/sector is the potential source of the terrorist as well as (in many cases) the intended victim of a terrorist incident. Commanders must be alert to even small changes within the civilian community in the AO.

- Are there refugee or displaced person camps within the region? (*Refugee camps normally require considerable CHS especially in PVNTMED and primary care areas. If present, how stable are the camps? Can dissidents and/or potential terrorists be hiding in the camps? Will there be a medical evacuation support mission for these camps?*)

- How is US involvement viewed by the HN populace? (*How are US troops treated by the HN populace? Are the area residents friendly? hostile? indifferent? How much contact is there between US forces and the civilian population?*)

- Do religious, ethnic, or cultural norms affect the interaction of US forces and the civilian populace? (*Are there specific religious, cultural, or ethnic norms which govern the interaction of US forces and the HN civilian populace? If there are and the US forces do not observe them, will the civilian population be offended? Can US forces actions contribute to discontent and increase the likelihood of an attack?*)

g. Political Planning Factors. The political environment in the AO requires careful consideration when assessing the potential for terrorist activity in a given geographical location.

- Are there any ethnic, cultural, or religious influences in the region? (*In nations with overt struggles concerning ethnic, religious, and cultural values, principles, or beliefs, the potential for terrorist-type activities is greater. These issues carry very serious emotional involvement for all participants and can present enormous challenges in working with and defusing issues based on these factors.*)

- Is the accomplishment of the CHS mission alleviating the reason for the unrest in the country and/or area (such as better access to health care or reducing morbidity and mortality rates in children). (*How is the CHS involvement in the area viewed by HN residents? Is the CHS mission alleviating suffering in the region and is it enhancing stability within the country?*)

APPENDIX P

STRATEGIC DEPLOYABILITY DATA

P-1. General

This appendix provides strategic deployability data for medical evacuation headquarters and units. It is only a general reference and must be tailored to the specific unit and equipment.

P-2. Strategic Deployability Data

Table P-1 provides strategic deployability data for medical evacuation headquarters and units.

Table P-1. Strategic Deployability Data

UNIT	SRC	WEIGHT (LBS)	CUBIC FT	SQ FT	TRANSPORT MODES						PASSENGER (AIR)	
					AIR			SURFACE				
					PURE FLEET TOTAL			SHIP BY % SQ FT		RAIL		
					C141	C17	C5	RORO	LMSR	(STD 89' CAR)	PAX	B747 (400 SEAT)
HHD, MED EVAC BN*	08446L000	94,914	8,102	1,017	2	1	1	0.6%	0.3%	2	57	14%
HHD, MED EVAC BN**	08446L000	262,439	25,571	3,961	6	3	2	2.3%	1.3%	8	57	14%
MED CO, AIR AMB UH-60*	08447L200	759,961	79,127	9,930	11	6	4	5.6%	3.3%	16	151	38%
MED CO, AIR AMB UH-60**	08447L200	1,596,590	196,912	22,755	30	16	10	12.9%	7.7%	35	151	38%
MED CO, AIR AMB (AASLT)*	08279C000	404,946	41,240	5,175	6	3	2	2.9%	1.7%	9	105	26%
MED CO, AIR AMB (AASLT)**	08279C000	776,922	108,331	12,644	15	8	5	7.2%	4.3%	19	105	26%
MED CO, GND AMB*	08449A000	118,198	9,591	1,204	2	1	1	0.7%	0.4%	2	75	19%
MED CO, GND AMB**	08449A000	546,516	66,113	7,408	12	6	4	4.2%	2.5%	15	75	19%

NOTE: The percentage figures in the RORO, LMSR, and B747 columns are the SRC space requirements of the ship capacity.

LEGEND:

LMSR Large Medium-Speed Roll-On/Roll-Off
PAX Passenger
RORO Roll-On/Roll-Off
SRC Standard Requirement Code
STD Standard

* (MRI-OBJ) without vehicles and equipment
** (MRI-OBJ) with vehicles and equipment

APPENDIX Q

EVACUATION CAPABILITIES OF UNITED STATES FORCES

Q-1. General

This appendix provides the evacuation capabilities of US forces vehicles and aircraft.

Q-2. Evacuation Capabilities of United States Air Force Aircraft

a. Evacuation capabilities of USAF aircraft are provided in Table Q-1. As the majority of USAF aircraft are not dedicated medical evacuation platforms, when used for medical evacuation the crew must be augmented with medical personnel to provide in-flight care. For additional information on these aircraft, refer to paragraph 10-36.

b. The evacuation capability of CRAF aircraft is provided in Table Q-2. For additional information on CRAF, refer to paragraph 10-37.

Table Q-1. Evacuation Capabilities of United States Air Force Aircraft

TRANSPORT AIRCRAFT	LITTER	AMBULATORY	COMBINATION
C-130 HERCULES	74	92	VARIETY
C-9A NIGHTINGALE	40	40	VARIETY
C-141 STARLIFTER	48	170	VARIETY
C-5 GALAXY	70		
C-17 A	*36	*54	
KC-135 AND KC-10	8	24	

* Normal configuration

Table Q-2. Civil Reserve Air Fleet Capabilities

TRANSPORT AIRCRAFT	LITTER	AMBULATORY	COMBINATION
BOEING B-767	*111	22	87 LITTER 22 AMBULATORY

* When activated, these aircraft are preconfigured for medical evacuation. The crew must be augmented with medical personnel.

Q-3. Evacuation Capabilities of United States Army Vehicles and Aircraft

The evacuation capabilities of US Army vehicles and aircraft are provided in Table Q-3. Additional discussion of these vehicles and aircraft is provided in Chapter 10.

Q-4. Railway Car Capabilities

Although railway cars are not available within the US Army inventory, it is important to know the approximate capacities of rail transport in the event they become available and/or required in domestic support operations or through wartime HN support agreements. The approximate capabilities of railway cars are provided in Table Q-4.

Q-5. Evacuation Capabilities of United States Navy Ships, Watercraft, and Rotary-Wing Aircraft

The evacuation capabilities of US Navy ships, watercraft, and aircraft are provided in Table Q-5. The entries for ambulatory and litter patients on ships are the same because all patients require a bunk.

Table Q-3. Evacuation Capabilities of United States Army Vehicles and Aircraft

VEHICLES/AIRCRAFT	LITTER	AMBULATORY	COMBINATION
GROUND VEHICLES			
M996 TRUCK, AMBULANCE	2	6	1 LITTER 3 AMBULATORY
M997 TRUCK, AMBULANCE	4	8	2 LITTER 4 AMBULATORY
M1010 TRUCK, AMBULANCE	4	8	
M792 TRUCK, AMBULANCE	3	6	2 LITTER 3 AMBULATORY
BUS, MOTOR, 44 PASSENGER	18	37	
M113 CARRIER, PERSONNEL	4**	10	
M998 TRUCK, CARGO/TROOP CARRIER (FOUR MAN)	3	4	
M998 TRUCK, CARGO/TROOP CARRIER (TWO MAN)	5		
TRUCK CARGO, 2 1/2 TON, 5 TON	12	16	
M997 HEAVY EXPANDED MOBILITY TACTICAL TRUCK	9		
M871 SEMITRAILER, CARGO	16		
M1085 TRUCK, CARGO, MEDIUM TACTICAL VEHICLE, LONG WHEELBASE, 5 TON	12	22	
M1093 TRUCK, CARGO, MEDIUM TACTICAL VEHICLE AIR DROP/AIR DELIVERY, 5 TON	8	14	
M1081 TRUCK, CARGO, MEDIUM TACTICAL VEHICLE, LIGHT VEHICLE AIR DROP/AIR DELIVERY, 2 1/2 TON	7	12	
ROTARY-WING AIRCRAFT			
***UH-60A BLACKHAWK	6	7	*4 LITTER 1 AMBULATORY
****UH-60A BLACKHAWK	3	4	4 LITTER 1 AMBULATORY
UH-1H/V IROQUOIS	6	9	*3 LITTER 4 AMBULATORY
CH-47 CHINOOK	24	31	#
FIXED-WING AIRCRAFT			
U-21 UTE	10	3	3 LITTER 3 AMBULATORY
C-12 HURON		8	

LEGEND:

- * Normal configuration
- ** Spall liner must be removed
- *** Without internal hoist installed
- **** With internal hoist installed
- # See Table 10-5

Table Q-4. Capabilities of Railway Cars

RAIL TRANSPORT	LITTER	AMBULATORY	COMBINATION
PULLMAN CAR (US)	32	48	
SLEEPING CAR (NATO/HN)	32	32	
AMBULANCE, RAILWAY CAR (NATO/HN)	24	30	
AMBULANCE, RAILWAY CAR, PERSONNEL	21	21	
RAILBUS			40 LITTER 16 AMBULATORY

Table Q-5. Evacuation Capabilities of United States Navy Ships, Watercraft, and Aircraft

SHIPS/WATERCRAFT/AIRCRAFT	LITTER	AMBULATORY
HOSPITAL SHIPS		
T-AH 19, US NAVAL SHIP MERCY	1000	1000
T-AH 20, US NAVAL SHIP COMFORT	1000	1000
CASUALTY RECEIVING AND TREATMENT SHIPS		
AMPHIBIOUS ASSAULT SHIP (LHD) (MULTIPURPOSE)	604	604
AMPHIBIOUS ASSAULT SHIP (LHA) (GENERAL PURPOSE)	367	367
AMPHIBIOUS ASSAULT SHIP (LPH)	222	222
AMPHIBIOUS TRANSPORT DOCK (LPD)	14	14
DOCK LANDING SHIP (LSD)	108	108
LIMITED MEDICAL CAPABILITY WATERCRAFT		
AMPHIBIOUS CARGO SHIP (LKA)	12	12
AMPHIBIOUS COMMAND SHIP (LCC)	24	24
ROTARY-WING AIRCRAFT		
CH-46 SEA KNIGHT	15	25
CH-53D SEA STALLION	24	*55
V22 OSPREY	12	24

* With centerline seating installed.

GLOSSARY

ABBREVIATIONS, ACRONYMS, AND DEFINITIONS

A2C2 Army airspace command and control

AASLT air assault

AATF air assault task force

ABCA American, British, Canadian, and Australian

acft aircraft

ACP air control point

ACR armored cavalry regiment

advanced trauma management (ATM) Resuscitative and stabilizing medical or surgical treatment provided to patients to save life or limb and to prepare them for further evacuation without jeopardizing their well-being or prolonging the state of their condition.

AE aeromedical evacuation (United States Air Force acronym)

AECC Aeromedical Evacuation Control Center

AELT aeromedical evacuation liaison team

AEOT aeromedical evacuation operations team

AF airfield

AFB Air Force Base

AFMIC Armed Forces Medical Intelligence Center

AIR STD Air Standardization Agreement

ALCC airlift control center

AM amplitude modulated

amb ambulance

ambulance control point The ambulance control point consists of a soldier (from the ambulance company or platoon) stationed at a crossroad or road junction where ambulances may take one of two or more directions to reach loading points. The soldier, knowing from which location each loaded ambulance has come, directs empty ambulances returning from the rear. The need for control points is dictated by the tactical situation. Generally, they are more necessary in forward areas.

ambulance exchange point (AXP) A location where a patient is transferred from one ambulance to another en route to a medical treatment facility. This may be an established point in an ambulance shuttle or it may be designated independently.

ambulance loading points This is a point in the shuttle system here one or more ambulances are stationed ready to receive patients for evacuation.

ambulance relay point This is a point in the shuttle system where one or more empty ambulances are stationed ready to advance to a loading point or to the next relay post to replace an ambulance that has moved from it. As a control measure, relay points are generally numbered from front to rear.

ambulance shuttle system The shuttle system is an effective and flexible method of employing ambulances during combat. It consists of one or more ambulance loading points, relay points, and when necessary, ambulance control points, all echeloned forward from the principal group of ambulances, the company location, or basic relay points as tactically required. (When patients are being transported by litter carries, this system is referred to as a *litter shuttle system*.)

AMC Air Mobility Command

AMEDD Army Medical Department

AMEDDC&S Army Medical Department Center and School

ANCD automated net control device

AO area of operations

AOC area of concentration (United States Army officer personnel)/air operations center (United States Air Force term)

AOR area(s) of responsibility

APES Automated Patient Evacuation System

AR Army regulation

ARSOF Army Special Operations Forces

ASCC Army Service Component Command

ASE aircraft survivability equipment

ASF aeromedical staging facility

aslt assault

ASMB area support medical battalion

ASMC area support medical company

ASMS area support MEDEVAC section

ASTS aeromedical staging squadron(s)

ATC air traffic control

ATM *See* advanced trauma management.

ATS air traffic services

attn attention

augmentation The addition of specialized personnel and/or equipment to a unit, aircraft, or ship to supplement the medical evacuation mission.

AVIM aviation intermediate maintenance

avn aviation

AVUM aviation unit maintenance

AXP *See* ambulance exchange point.

BAS battalion aid station

bde brigade

BDU battle dress uniform

BIFV Bradley infantry fighting vehicle

bn battalion

brigade support area (BSA) A designated area in which combat service support elements from division and corps support commands and provide logistic support to the brigade. The BSA normally is located 20 to 25 kilometers behind the forward edge of the battle area.

BSA *See* brigade support area.

BTU British thermal unit

BW biological warfare

C Celsius

C2 command and control

C3IC coalition coordination, communications, and integration center

C4I command, control, communications, computers, and intelligence

CASEVAC *See* casualty evacuation.

casualty Any person who is lost to his organization by reason of having been declared dead, wounded, injured, diseased, interned, captured, retained, missing, missing in action, beleaguered, besieged, or detained.

casualty evacuation This is the term used by nonmedical units to refer to the movement of casualties aboard nonmedical vehicles or aircraft. En route medical care is not provided.

CCAT critical care air transport

CCIR commander's critical information requirements

CDR commander

CG center of gravity

CH cargo/transport helicopter

CHL combat health logistics

CHS *See* combat health support.

CINC Commander in Chief

clr clearing

CMCC corps movement control center

CMO civil-military operations

co company

CO_2 carbon dioxide

COA course of action

collecting point (patient) A specific location where casualties are assembled to be transported to a medical treatment facility; for example, a company aid post.

combat health support (CHS) This term is used in current doctrine to include all support and services performed, provided, or arranged by the Army Medical Department to promote, improve, conserve, or restore the mental or physical well-being of personnel in the Army and, as directed, in other Services, agencies, and organizations.

combat medic A medical specialist trained in emergency medical treatment procedures and assigned or attached in support of a combat or combat support unit.

combat search and rescue A specific task performed by rescue forces to effect the recovery of distressed personnel during wartime or contingency operations.

combat service support (CSS) The assistance provided to sustain combat forces, primarily in the fields of administration and logistics. It includes administrative services, chaplain services, civil affairs, food service, finance, legal services, maintenance, combat health support, supply, transportation, and other logistical services.

combat support (CS) Fire support and operational assistance provided to combat elements. It includes artillery, air defense artillery, military police, signal, military intelligence, and chemical.

combat zone (CZ) That area required by combat forces for the conduct of operations. It is the territory forward of the Army rear area boundary.

comp component

COMSEC communications security

concealment The protection from observation or surveillance.

CONUS continental United States

cover Natural or artificial protection from enemy observation and fire.

CP command post

CRAF Civil Reserve Air Fleet

CRO carded for record only

CRTS casualty receiving and treatment ship

CS *See* combat support.

CSAR *See* combat search and rescue.

CSC combat stress control

CSH combat support hospital

CSS *See* combat service support.

CTA common table of allowances

CW chemical warfare

CZ *See* combat zone.

DA Department of the Army

DD Department of Defense

DE directed energy

defilade Protection from hostile observation and fire provided by an obstacle such as a hill, ridge, or bank. To shield from enemy observation by using natural or artificial obstacles.

dest destination

det detachment

DIRAEFOR Director of Aeromedical Evacuation Forces (United States Air Force)

DISCOM division support command

div division

division rear The area located in the division rear positioned near airlanding facilities and along the main supply route. The division rear contains the division support command command post, headquarters elements of the division support command battalions, and those division support command elements charged with providing backup support to the combat service support elements in the brigade support area and direct support to units located in the division rear. Selected corps support command elements in the division may be located in the division rear to provide direct support backup and general support as required.

DMOC division medical operations center

DMRIS Defense Medical Regulating Information System

DNBI disease and nonbattle injury

DOA dead on arrival

DOD Department of Defense

DOW died of wounds

dressed litter A litter provided with one, two, or three blankets to reduce the danger of shock and to afford warmth and comfort during transport.

DRYAD numeral cipher A random listing of numbers that can be used to encode a plain text message for radio transmission.

DS direct support

DTG date/time group

EAC echelons above corps

emergency medical treatment (EMT) The immediate application of medical procedures to the wounded, injured, or sick by specially trained medical personnel.

EMT *See* emergency medical treatment.

EOD explosive ordnance disposal

EPLRS enhanced position location and reporting system

EPW enemy prisoner of war

ETE estimated time en route

evac evacuation

evacuation policy A command decision indicating the length in days of the maximum period of non-effectiveness that patients may be held within the command for treatment. Patients who, in the opinion of a responsible medical officer, cannot be returned to duty status within the period prescribed are evacuated by the first available means, provided the travel involved will not aggravate their disabilities.

F Fahrenheit

FARP forward arming and refueling points

FCC flight control center

FH field hospital

first aid (self-aid/buddy aid) Urgent and immediate lifesaving and other measures which can be performed for casualties (or performed by the victim himself) by nonmedical personnel when medical personnel are not immediately available.

FLOT forward line of own troops

flt flight

FM field manual; frequency modulated

FMC US Field Medical Card (Department of Defense Form 1380)

FOB forward operating base

FOC flight operations center

FRAGO fragmentary orders

FSB forward support battalion

FSMC forward support medical company

FSMT forward support MEDEVAC team

FST forward surgical team

ft feet

fwd forward

G5 Assistant Chief of Staff, G5, Civil-Military Operations

GH general hospital

GND ground

gp group

GPFU gas-particulate filter unit

GPMRC Global Patient Movement Requirements Center

GPS Global Positioning System

GRREG graves registration

GS general support

GSW gunshot wound

GWS Geneva Convention for the Amelioration of the Condition of the Wounded and Sick in Armed Forces in the Field

HCAA high capacity air ambulance

HEED helicopter emergency egress device

HEMTT truck, cargo, heavy expanded, mobility tactical, 8x8

HF high frequency

HHC headquarters and headquarters company

HHD headquarters and headquarters detachment

hldg holding

HMMWV high mobility multipurpose wheeled vehicle

HN host nation

HQ headquarters

HREC health record

HSC headquarters and support company

ID identification

initial point of treatment Any point within the combat health support system at which a soldier is seen and treated by trained medical personnel.

interoperability The ability of systems, units, or forces to provide services to and accept services from other systems, units, or forces and to use the services so exchanged to enable them to operate effectively together.

IR infrared

ISB intermediate staging base

ITR inpatient treatment record

ITRCS inpatient treatment record cover sheet

IV intravenous

JMTB Joint Military Transportation Board

JP jet petroleum

JSOTF joint special operations task force

KED Kendricks Extrication Device

KIA killed in action

LBE load-bearing equipment

lbs pounds

LC line of contact

LD line of departure

lines of patient drift Natural routes along which wounded soldiers may be expected to go back for medical care from a combat position.

litter patient A patient whose physical condition requires transportation by a litter. Some ambulatory patients may require to be transported by litter when traveling over rough terrain.

LMTV light medium tactical vehicle

LOA limit of advance

LOC lines of communication

LST landing ship, tank

LTOE living table of organization and equipment

LVAD/AD light vehicle air drop/air delivery

LWB long wheelbase

LZ landing zone

M meter

MA mortuary affairs

maint maintenance

manual evacuation Process of transporting patients by manual carries without the aid of a litter or other means of transportation.

MASF mobile aeromedical staging facility

MAST military assistance to safety and traffic

med medical

MEDCOM medical command

MEDEVAC medical evacuation

medical equipment set (MES) A chest containing medical instruments and supplies designed for specific table of organization and equipment units or specific missions.

medical treatment facility (MTF) Any facility established for the purpose of providing medical treatment. This includes battalion aid stations, division clearing stations, dispensaries, clinics, and hospitals.

MEDLOG BN medical battalion, logistics (forward/rear) (Medical Force 2000 unit)

MES *See* medical equipment set.

METT-TC mission, enemy, terrain, troops, time available, and civilian considerations

MF2K Medical Force 2000

mg milligram

MIA missing in action

MIJI meaconing, intrusion, jamming, and interference

ml milliliter

MOPP mission-oriented protective posture

MOS military occupational specialty (enlisted personnel)

MOUT military operations on urbanized terrain

MP military police

MRE meal(s), ready to eat

MRI Medical Reengineering Initiative

MRO medical regulating office(r)

MSB main support battalion

MSC Military Sealift Command

MSMC main support medical company

MSR main supply route

MTF *See* medical treatment facility.

MTOE modified table of organization and equipment

MTV medium tactical vehicle

MWD military working dog

NA not applicable

NATO North Atlantic Treaty Organization

NAVAIDS navigational aids

NBC nuclear, biological, and chemical

NBI nonbattle injury

NCA National Command Authorities

NCO noncommissioned officer

NCOIC noncommissioned officer in charge

NEO noncombatant evacuation operations

NGO nongovernmental organization

no number

NOE nap-of-the-earth

NOK next of kin

NSCC Navy Service Component Command

NVG night vision goggles

OBJ objective

OCONUS outside continental United States

OD olive drab

ODA operational detachment A

OEG operational exposure guidance

OH observation helicopter

OMF originating medical facility

OPCON *See* operational control.

operational control (OPCON) The authority delegated to a commander to direct forces provided him so he can accomplish specific missions or tasks that are usually limited by function, time, or location; to deploy units concerned; and to retain or assign tactical control of these units. It does not include authority to assign separate employment of components of the units concerned, not does it, of itself, include administrative or logistics control.

OPLAN operation plan

OPORD operation order

ops operations

OPSEC operations security

OPTEMPO operational tempo

OR operating room

OTR outpatient treatment record

OVE on vehicle equipment

PA physician assistant

PAC Personnel and Administration Center

PAD patient administrator

pararescue team Specifically trained personnel qualified to penetrate to the site of an incident by land or parachute, render medical aid, accomplish survival methods, and rescue survivors.

passage of lines Passing one unit through the position of another, as when elements of a covering force withdraw through the forward edge of the main battle area, or when an exploiting force moves through elements of the force that conducted the initial attack. A passage may be designated as a forward or rearward passage of lines.

patient (PNT) A sick, injured or wounded soldier who receives medical care or treatment from medically trained personnel.

PC pilot in command

PCP patient collecting point

PDS Personnel Daily Summary

PI copilot

PIR priority information requirement

PJ pararescuemen (United States Air Force)

PL phase line

PLL prescribed load list

PLS personnel locator system

plt platoon

PMI patient movement items

PMM preventive medicine measures

PNT *See* patient.

POL petroleum, oils, and lubricants

PP passage point

PPC performance planning card

PSNCO personnel staff noncommissioned officer

PSS personnel service support

PVNTMED preventive medicine

PVO private volunteer organization

PWIC Prisoner of War Information Center

QSTAG Quadripartite Standardization Agreement

rationalization Any action that increases the effectiveness of allied forces through more efficient or effective use of defense resources committed to the alliance. Rationalization includes consolidation, reassignment of nation priorities to higher alliance needs, standardization, specialization, mutual support or improved interoperability, and greater cooperation. Rationalization applies to both weapons/materiel resources and nonweapons military matters.

RBC red blood cells

reconstitution The total process of keeping the force supplied with various supply classes, services, and replacement personnel and equipment required to maintain the desired level of combat effectiveness and of restoring units that are not combat effective to the desired level of combat effectiveness through the replacement of critical personnel and equipment. Reconstitution encompasses unit regeneration and sustaining support.

rep repair

ROE rules of engagement

RP release point

RSI rationalization, standardization, and interoperability

RT receiver-transmitter

RTD return to duty

Rte route

RTO radio/telephone operator

S1 Adjutant (US Army)

S2 Intelligence Officer (US Army)

S3/G3 Operations and Training Officer (US Army)

S4 Supply Officer (US Army)

sec section

SF special forces/standard form

SFG special forces group

SFOB Special Forces Operating Base

SFMS special forces medical sergeant

SINCGARS Single-Channel Ground and Airborne Radio System

SKED company trade name for rescue litter

SMCT Soldier's Manual of Common Tasks

SOA special operations aviation

SOC Special Operations Command

SOCM special operations combat medic

SOF special operations forces

SOI signal operation instructions

SOP standing operating procedure

SOSB special operations support battalion

special evacuation techniques Those techniques and/or procedures required to remove injured persons from tanks and armored vehicles, motor vehicles, or from other limited access positions.

SPO security, plans, and operations

spt support

sq square

sqd/sqds squad/squads

SSN social security number

STANAG *See* standardization agreement.

standardization The process of developing concepts, doctrines, procedures, and designs to achieve and maintain the most effective levels of compatibility, interoperability, interchangeability, and commonality in the fields of operations, administration, and materiel.

standardization agreement (STANAG) The acronym for North Atlantic Treaty Organization (NATO) standardization agreement. The NATO consists of 15 member nations allied together for military interoperability in both equipment and methods of operations. As each standardization agreement is adopted, it becomes part of each nation's unilateral procedures and is incorporated into national doctrinal and procedural publications.

STP Soldier Training Publication

SURG surgical

SVC service

TACC tanker airlift control center

TAES Theater Aeromedical Evacuation System

TAMCA Theater Army Movement Control Agency

TC training circular

TDA table of distribution and allowances

TF task force

theater of operations (TO) That portion of an area of conflict necessary for the conduct of military operations, either offensive or defensive, to include administration and logistical support.

TM team

TO *See* theater of operations.

TOC tactical operations center

TOE table(s) of organization and equipment

TPMRC Theater Patient Movement Requirements Center

travois An evacuation device pulled by either one or two horses or similar animals.

triage The medical sorting of patients according to type and seriousness of injury, likelihood of survival, and the establishment of priority for treatment and/or evacuation to assure medical care of the greatest benefit to the largest number. The categories are: MINIMAL—those who require limited treatment and can be returned to duty; IMMEDIATE—patients requiring immediate care to save life or limb; DELAYED—patients who, after emergency treatment, incur little additional risk by delay or further treatment; and EXPECTANT—patients so critically injured that only complicated and prolonged treatment will improve life expectancy.

trmt treatment

TSOP tactical standing operating procedure

UCMJ Uniform Code of Military Justice

UH utility helicopter

US United States

USA United States Army

USAF United States Air Force

USN United States Navy

USNS United States Navy Ship

USTRANSCOM United States Transportation Command

UW unconventional warfare

UXO unexploded ordnance

VA Department of Veterans Affairs

VHF very high frequency

WIA wounded in action

WMD weapons of mass destruction

REFERENCES

SOURCES USED

These are the sources quoted or paraphrased in this publication.

NATO STANAGs

2040. *Stretchers, Bearing Brackets, and Attachment Supports*. 23 September 1982. (Latest Amendment, 30 May 1986.)
2087. *Medical Employment of Air Transport in the Forward Area*. 29 June 1983. (Latest Amendment, 9 September 1997.)
2128. *Medical and Dental Supply Procedures*. 15 November 1982. (Latest Amendment, 21 November 1991.)
2132. *Documentation Relative to Medical Evacuation, Treatment, and Cause of Death of Patients*. 7 August 1974. (Latest Amendment, 15 September 1986.)
2350. *Morphia Dosage and Casualty Marking*. 27 April 1994.
2454. *Regulations and Procedures for Road Movement and Identification of Movement Control and Traffic Control Personnel and Agencies*. March 1998.
2931. *Orders for the Camouflage of the Red Cross and Red Crescent on Land in Tactical Operations*. 18 October 1984. (Latest Amendment, 3 April 1998.)
3204. *Aeromedical Evacuation*. 26 September 1973. (Latest Amendment, 21 November 1997.)

ABCA QSTAGs

230. *Morphia Dosage Agreement (Edition 2)*. 23 January 1985.
435. *Medical Materiel Management During Patient Evacuation (Amendment 1)*. 20 June 1984.
436. *Minimum Labelling Requirements for Medical Materiel (Amendment 1)*. 8 October 1980.
470. *Documentation Relative to Medical Evacuation, Treatment, and Cause of Death of Patients*. 23 February 1979. (Latest Amendment, 14 August 1989.)
512. *Marking of Military Vehicles*. 31 January 1979. (Latest Amendment, 9 October 1980.)
519. *Stretchers*. 20 November 1985.
529. *Medical Employment of Air Transport in the Forward Area*. 24 March 1980.

AIR STDs

44/36A. *Aeromedical Evacuation by Helicopter*. 2 October 1978.
61/71. *Selection, Priorities, and Classes of Conditions for Aeromedical Evacuation*. 10 May 1989.

Joint and Multiservice Publications

Joint Pub 1-02. *DOD Dictionary of Military and Associated Terms*. 23 March 1994.
Joint Pub 4-02. *Doctrine for Health Service Support in Joint Operations*. 26 April 1995.
Joint Pub 4-02.2. *Joint Tactics, Techniques, and Procedures for Patient Movement in Joint Operations*. 30 December 1996.

AR 40-535. *Worldwide Aeromedical Evacuation*. AFR 164-5; OPNAVINST 4630.9C; MCO P4360.9A. 1 December 1975. (Reprinted with basic including Change 1, 10 May 1979.)
FM 3-5. *NBC Decontamination*. FMFM 11-10. 17 November 1993.
FM 8-285. *Treatment of Chemical Agent Casualties and Conventional Military Chemical Injuries*. NAVMED P-5041; AFJMAN 44-149; FMFM 11-11. 22 December 1995.
FM 90-3. *Desert Operations*. FMFM 7-27. 24 August 1993.
FM 100-19. *Domestic Support Operations*. FMFM 7-10. 1 July 1993.
FM 100-27. *US Army/US Air Force Doctrine for Joint Airborne and Tactical Airlift Operations*. AFM 2-50. 31 January 1985. (Reprinted with basic including Change 1, 29 March 1985.)
TB MED 507. *Occupational and Environmental Health Prevention, Treatment, and Control of Heat Injury*. NAVMED P-5052-5; AFP 160-1. 25 July 1980. (Change 1, 30 September 1996.)

Army Publications

AR 15-6. *Procedures for Investigating Officers and Boards of Officers*. 11 May 1988.
AR 25-400-2. *The Modern Army Recordkeeping System (MARKS)*. 26 February 1993.
AR 40-66. *Medical Record Administration and Health Care Documentation*. 3 May 1999.
AR 71-32. *Force Development and Documentation—Consolidated Policies*. 3 March 1997.
AR 95-1. *Flight Regulations*. 1 September 1997.
FM 1-103. *Airspace Management and Army Air Traffic in a Combat Zone*. 30 December 1981.
FM 1-120. *Army Air Traffic Services Contingency and Combat Zone Operations*. 22 May 1995.
FM 1-202. *Environmental Flight*. 23 February 1983.
FM 1-400. *Aviators' Handbook*. 31 May 1983.
FM 3-50. *Smoke Operations*. 4 December 1990. (Change 1, 11 September 1996.)
FM 8-10. *Health Service Support in a Theater of Operations*. 1 March 1991.
FM 8-10-1. *The Medical Company—Tactics, Techniques, and Procedures*. 29 December 1994.
FM 8-10-3. *Division Medical Operations Center—Tactics, Techniques, and Procedures*. 12 November 1996.
FM 8-10-4. *Medical Platoon Leaders' Handbook—Tactics, Techniques, and Procedures*. 16 November 1990.
FM 8-10-7. *Health Service Support in an NBC Environment*. 22 April 1993.
FM 8-10-24. *Area Support Medical Battalion—Tactics, Techniques, and Procedures*. 13 October 1993. (Change 1, 3 October 1995).
FM 8-42. *Combat Health Support in Stability Operations and Support Operations*. 27 October 1997.
FM 8-51. *Combat Stress Control in a Theater of Operations—Tactics, Techniques, and Procedures*. 29 September 1994.
FM 8-55. *Planning for Health Service Support*. 9 September 1994.
FM 8-230. *Medical Specialist*. 24 August 1984.
FM 8-250. *Preventive Medicine Specialist*. 27 January 1986. (Reprinted with basic including Change 1, 12 September 1986).
FM 21-10. *Field Hygiene and Sanitation*. 22 November 1988.
FM 21-10-1. *Unit Field Sanitation Team*. 11 October 1989.
FM 22-51. *Leaders' Manual for Combat Stress Control*. 29 September 1994.
FM 31-70. *Basic Cold Weather Manual*. 12 April 1968. (Change 1, 17 December 1968.)
FM 90-5. *Jungle Operations*. 16 August 1982.
FM 90-6. *Mountain Operations*. 30 June 1980.

FM 90-10. *Military Operations on Urbanized Terrain (MOUT) (How to Fight)*. 15 August 1979.
FM 90-10-1. *An Infantryman's Guide to Combat in Built-Up Areas*. 12 May 1993. (Change 1, 3 October 1995.)
FM 100-5. *Operations*. 14 June 1993.
FM 100-23. *Peace Operations*. 30 December 1994.
FM 100-103. *Army Airspace Command and Control in a Combat Zone*. 7 October 1987.
FM 101-5. *Staff Organization and Operations*. 31 May 1997.
TC 1-204. *Night Flight Techniques and Procedures*. 27 December 1988.
TC 90-6-1. *Military Mountaineering*. 26 April 1989.

DOCUMENTS NEEDED

These documents must be available to the intended users of this publication.

DA Form 1156. *Casualty Feeder Report*. 1 June 1966.
DA Form 1594. *Daily Staff Journal or Duty Officer's Log*. 1 November 1962.
DA Form 2028. *Recommended Changes to Publications and Blank Forms*. 1 February 1974.
DA Form 2404. *Equipment Inspection and Maintenance Worksheet*. 1 April 1979.
DA Form 3444 Series. *Terminal Digit File for Treatment Record*. 1 May 1991.
DA Form 3647. *Inpatient Treatment Record Cover Sheet*. May 1979.
DA Form 4006. *Field Medical Record Jacket*. 1 February 1979.
DD Form 600. *Patient's Baggage Tag*. 1 July 1973.
DD Form 601. *Patient Evacuation Manifest*. 1 October 1951.
DD Form 602. *Patient Evacuation Tag*. 1 February 1963.
DD Form 1380. *US Field Medical Card*. December 1991.
DD Form 1934. *Geneva Conventions Identity Card for Medical and Religious Personnel Who Serve in or Accompany the Armed Forces*. July 1974.

READINGS RECOMMENDED

These readings contain relevant supplemental information.

Joint and Multiservice Publications

AR 40-40. *Documentation Accompanying Patients Aboard Military Common Carriers*. BUMEDINST 4650.2A; AFR 164-3. 15 May 1972.
AR 40-350. *Patient Regulating To and Within the Continental United States*. AFR 168-11; BUMEDINST 6320.1E; PHS CCPM 60; COMDTINST M6320.8B; NOAAR 56-52C. 30 March 1990.
AR 500-4. *Military Assistance to Safety and Traffic (MAST)*. AFR 64-1. 15 January 1982.
DA Pam 40-3. *Medical Service Multilingual Phrase Book*. NAVMED P-5104; AFP 160-28. 31 May 1971.
FM 3-4. *NBC Protection*. FMFM 11-9. 29 May 1992. (Reprinted with basic including Change 1, 28 October 1992; Change 2, 21 February 1996.)

FM 3-100. *Chemical Operations—Principles and Fundamentals*. MCWP 3-3.7.1. 8 May 1996.
FM 8-9. *NATO Handbook on the Medical Aspects of NBC Defensive Operations AMedP-6* (*Part I—Nuclear, Part II—Biological, Part III—Chemical.*) NAVMED P-5059; AFJMAN 44-151V1V2V3. 1 February 1996.
FM 90-13. *River-Crossing Operations*. MCWP 3-17.1. 26 January 1998.
FM 101-5-1. *Operational Terms and Graphics*. MCRP 5-2A. 30 September 1997.

Army Publications

CMH Pub 90-28. *Dust Off: Aeromedical Evacuation in Vietnam*. 18 January 1982.
FM 1-300. *Flight Operations Procedures*. 15 July 1998.
FM 1-564. *Shipboard Operations*. 29 June 1997.
FM 8-10-8. *Medical Intelligence in a Theater of Operations*. 7 July 1989.
FM 8-10-14. *Employment of the Combat Support Hospital—Tactics, Techniques, and Procedures*. 29 December 1994.
FM 8-10-15. *Employment of the Field and General Hospitals—Tactics, Techniques, and Procedures*. 26 March 1997.
FM 8-10-18. *Veterinary Service—Tactics, Techniques, and Procedures*. 22 August 1997.
FM 8-10-19. *Dental Service Support in a Theater of Operations*. 12 May 1993.
FM 8-10-25. *Employment of Forward Surgical Teams—Tactics, Techniques, and Procedures*. 30 September 1997.
FM 8-10-26. *Employment of the Medical Company (Air Ambulance)*. 16 February 1999.
FM 20-32. *Mine/Countermine Operations*. 29 May 1998. (Change 1, 30 June 1999.)
FM 21-11. *First Aid for Soldiers*. 27 October 1988. (Reprinted with basic including Changes 1—2, 4 December 1991.)
FM 21-60. *Visual Signals*. 30 September 1987.
FM 24-1. *Signal Support in the AirLand Battle*. 15 October 1990.
FM 27-10. *The Law of Land Warfare*. 18 July 1956. (Reprinted with basic including Change 1, 15 July 1976.)
FM 90-13-1. *Combined Arms Breaching Operations*. 28 February 1991. (Reprinted with basic including Change 1, 7 May 1993.)
FM 90-14. *Rear Battle*. 10 June 1985.
FM 100-10. *Combat Service Support*. 3 October 1995.
FM 100-14. *Risk Management*. 23 April 1998.
STP 21-1-SMCT. *Soldier's Manual of Common Tasks Skill Level 1*. 1 October 1994.
TC 5-400. *Unit Leaders' Handbook for Environmental Stewardship*. 29 September 1994. (Reprinted with basic including Changes 1—2, 25 July 1997.)
TM 9-2320-280-24P-1 and 2. *Unit, Direct Support and General Support Maintenance Repair Parts and Special Tools List (Volume I and II)*. 31 January 1996.
TM 11-5820-890-10-8. *Operator's Manual for SINCGARS Ground Combat Net Radio*. 1 December 1998.

INDEX

References are to paragraph numbers except where specified otherwise.

abandoning (leaving) patients
  decision, 4-*6b*(2)
  mobility, 1-11*f*
acclimatization
  desert operations, 5-4*a*(2)
  general, B-2
  jungle operations, 5-3*f*(4)
advanced trauma management, 1-10*a*(2), 4-7*a*(3), 5-9*a*
aeromedical
  evacuation. *See also* air ambulance; United States Air Force.
    advantages, 10-22
    augmentation, 4-12*c*, 5-4*c*(3)
    briefing, 6-11*h*, K-3
    control center. *See* United States Air Force.
    coordination for, 4-12, 6-3*i*
    corps, 4-12*d*
    effectiveness, 4-12
    from airhead, 5-8*b* and *d*
    general, 4-12*g*, 10-21
    precedence, 4-1*d*, 7-3, K-5, K-7
    requesting unit responsibilities, 7-4, 10-25*a*
    selection of patients for, K-2
    special operations aviation, 6-12*b*
    winds, 5-4*c*(7)
  staging facility. *See* United States Air Force.
aide/evacuation noncommissioned officer, 2-2*c*, 2-2*d*(1)—(2), 2-3*c*(3)
air ambulance. *See also* ambient light; hoist rescue operations; icing; landing zones; loading/unloading; medical company, air ambulance; medical evacuation battalion; United States Air Force.
  advantages, 10-22
  air
    assault task force, 5-8*c*
    corridor, 5-11*c*
    defense, 5-2*d*(2)(*g*), 5-4*c*(8), 5-10*e*(2), G-5*d*(1)
  availability, 4-3*c*(4)
  aviation
    intermediate maintenance, 3-11*c*(2)
    unit maintenance, 3-3*b*, 3-11*b*
  batteries, 5-5*e*
  capabilities, 4-12*a*, B-2
  civilian community, 4-9*c*
  classes of helicopters, 10-24
  combat search and rescue, 5-12
  communications, 5-11*a*, 6-4*b*(2)
  contaminated, N-2*a*

air ambulance (*continued*)
corps assets, 4-1*d*(1), 4-3, 4-7*b*(2), 5-11, 6-4*b*
crew, 4-1*d*(2), 5-2*d*, 5-4*b*—*c*, 5-12, B-2, N-3*a*
cross-FLOT operations, 5-11
decontamination, 5-6*e*
density altitude, 5-2*d*(2)(*a*), E-15*a*, E-16*a*
desert operations, 5-4*a*
direct support, 4-3*d*(3), 4-12*d*—*e*
dust and sand, 5-4*a*(3)
escort, 5-11*a*, B-2
evacuation by, 4-3*c*(6), 5-10*g*(6)
evacuation platform, 4-1*d* (2), B-2
external lift capabilities, 4-3*d*(3)
extreme cold weather operations, 5-5, E-17
field sited, 5-11*a*, 6-4*b*
flexibility, 4-7*b*(3)
flight route selection, 5-2*d*, 5-4*c*(2)(*a*)
FM homing, 10-25*d*(5)
fuel, 5-5*f*
general, 4-1, 4-12*e*, 6-4*b*, 10-21
support, 3-10*b*, 4-12*e*, 6-4*b*
Geneva Conventions, 5-12, A-2*b,* A-3, A-6
ground handling, 5-4*a*(3)
helipad, 4-3*d*(3)(*a*)
hide position, 5-11*a*
illumination devices, 10-24*d*(3), E-10
integration, 4-7*b*(2)
inversion, F-4*a*(4)
jungle operations, 5-3*d*, 5-3*f*(7), E-16
laager site, 5-11*a*
maintenance program, 3-4*e*
means (modes) of evacuation, 4-3*c*(4), 7-2
medical regulating, 6-4*b*(2)
military
operations on urbanized terrain, 5-10*c*, 5-10*e*(2)
working dog, 4-13
mountain operations, 5-2*c*—*d*, E-15
movement of medical
personnel, equipment, 3-11*a*, 4-12, 5-11*a*
supplies and blood and blood products, 3-11*a*, 4-12
nap-of-the-earth flying, 5-4*a*(3), 5-4*c*(1) and (8), F-1*b*, F-4*b*
naval air space management system, 5-7*a*(2)
night operations, 5-4*c*(2), 10-25*d*(3), E-10
nuclear, biological, and chemical environment, 5-6*c*—*d*
on-call support, 5-8*c*

air ambulance (*continued*)
performance planning, 5-2*d*(2)(*a*), 5-3*f*(7), E-14
preferred method, 5-2*c*(4), 5-3*d*, 5-4*c*(3), 5-10*e*(2)
primary means, 4-1*d*(2)
readiness status, 5-11*c*
reduce turnaround time, 6-4*b*(2)
reliance on, 4-6*a*(7)(*b*)
risk, 4-1*d*(2)
river crossing operations, 4-7*b*(4)
rotorwash, 5-6*d*(5)
special operations forces, 6-12
tactical situation, 4-3*c*
transferred to, 5-11*a*
UH-1H/V (Iroquois) helicopter, 3-11*b*, 10-24*b*, 10-28
UH-60A (Blackhawk) helicopter, 3-11*b*, 10-24*a*, 10-27
visibility, 5-2*d*(2)(*d*), 5-4*a* and *c*, 5-5*b*
weather, 4-3*c*(4), 5-2*d*, G-5*d*(3), L-7*h*
air assault
operations, 4-7*a*(3)(*c*), 5-8, 5-11*b*
task force, 5-8*c*
air crash rescue support, 3-11*b*, 5-11
airborne operations, 4-3, 4-7*a*(3)(*c*), 5-8, 5-11*b*, 6-9*b*
ambient light, 5-4*c*(2), E-17*b*
ambulance
driver, 2-2*a*, 2-2*d*(2), 2-3*c*(4), 4-3*c*, 5-2*c*(6), 10-1*b*, 10-3—4, G-5*d*(4), N-3*b*
exchange point. *See also* combat health logistics.
activation, B-4
coordination, 5-2*c*
covering force, 4-7*b*(2)
cross-FLOT operations, 5-11*c*
definition, 4-5*b*
designation, 2-3*c*(1), B-2
evacuation
from, 4-3*c*(4), 5-2*d*(2)(*g*), 7-4*e*
to, 2-2*e*
jungle operations, 5-3*d*
location 4-7*b*(1), 5-11*c*
mass casualty situation, 10-12
mountain operations, 5-2*c* and *i*
overlays, 2-3*c*(1), 4-3*c*(1), B-2, N-1
passage of lines, 4-7*b*(1)—(2)
predetermined (predesignated), 5-10*g*(2), B-2
pre-positioned, 4-3*d*
rapid evacuation, 4-5*b*(2)
rendezvous point, 4-5*b*(1), B-2

ambulance
exchange point (*continued*)
security operations, 4-7*b*(2)
staffing, B-2
supported positions, 4-5*b*(3)
platoon. *See also* medical company, ground ambulance.
area support, 2-3*a*
medical battalion, 4-1*d*(1)
collocated with, 4-3*d*(2)
communications, 2-3*e*
corps support, 2-4*a*, 4-1*d*(1)
deployment, 4-3*c*(4)(*a*)
Echelon II support, 2-3*a*
headquarters, 2-3*d*, 3-8*a*
leader, 2-3*c*(1), 3-8*c*(1)
messenger in medical channels, 2-4*c*, 4-3*c*
mission, 2-3*b*, 2-4*c*
strip maps, 2-3*c*(1)
shuttle system (litter). *See also* ambulance exchange point; patient collecting point.
advantages, 4-5*c*(6)
assets used, 4-3*e*(3)
control points, 4-5*c*(3) and (5)
extreme cold weather operations, 5-5*e*
jungle operations, 5-3*d*
loading points, 4-5*c*(1) and (5)
management tool, 4-5, B-2
military operations on urbanized terrain, 5-10
mountain operations, 5-2*c*(3)
obstacle marking, 4-5*d*
relay points, 4-5*c*(2) and (5), 5-10*g*(6), 9-10*d*
river crossing operations, 4-7*b*(4)
staffing, 4-5*c*(5)
warming station, 9-10*d*
squad. *See also* medical company, ground ambulance.
ambulance
section, 2-2*b*
team, 2-2*e*, 4-3*c*, 5-10*e*(1)
battalion aid station, 4-3*c*
communications net, 2-2*e*
deployment, 4-3*c*(4)(*a*) and (*c*)
division, 4-1*d*(1)
forward site, 4-3*c*(4)(*b*)
messenger in medical channel, 2-2*c*, 4-3*c*(4)—(5)
mission, 2-2, 4-1*e*
overlays, 2-3*c*(1), 4-3*c*(1)

ambulance
squad (*continued*)
platoon leader, 2-2*a*, 2-3*c*(1)
staffing, 2-2*a*
strip maps, 2-3*c*(1)
amphibious operations, 4-7*b*(4), 10-12*b*
area support. *See also* ambulance exchange point; patient acquisition; patient collecting point.
coordination, 2-1*b*
corps, 2-4
functional area, 1-9
medical battalion
ambulance platoon, 2-4*b*, 4-1*d*(1)
area support, 3-7*b*, 4-3*f*
area support medical company, 1-10*a*(2)(*c*), 2-4*b*, 3-7*b*, 4-3*f*(2)(*a*), 6-6*h*, 10-12*c*
augmentation from, 4-2*d*
echelons of care, 1-10*a*
evacuation from, 4-1*d*
forward surgical teams, 4-3*f*(2)(*a*)
medical supply, 3-8*d*
organic assets, 4-3*f*(3)
medical evacuation, 3-7*b*, 4-1*d*(1)
multinational operations, M-6*b*(6)
provision of support, 1-10*a*, 2-1*a*—*b*, 2-3*a*
requirements, N-3*a*
armed forces
allies, 4-1*e*, 4-4*c*, 4-10, B-2, B-4, G-5*c*(8)
coalition, 4-1*e*, 4-4*c,* 4-10, A-5*a,* B-2, B-4, G-5*c*(8)
host nation, B-2, B-4
indigenous, 5-9*a*
Medical Intelligence Center, 1-3*b*
threat (enemy), 4-1*e*, B-2
United States, 4-1*e*, 4-4*a,* 4-10, A-5*a*, B-2, B-4
Army
airspace command and control. *See also* division medical operations center.
brigade S3 (air), 4-3*d*(3)
coordination for, 3-3*d*, 4-3*d*(3)
evacuation tenets, 4-3*a*
integration into, 4-3*e*(1), 4-5*b*(3), 4-6*b*(1)
requirements, 4-7*b*(1), B-2
fixed-wing aircraft. *See* nonmedical transportation assets.
Medical Department Battlefield Rules
clear the battlefield, 1-12, 4-2, 4-7*a*(4), 4-11*a*, 5-10*g*(3), B-2
health of the command, 1-12, B-2
medical presence, 1-12
return to duty, 1-12. *See also* return to duty.

Army
Medical Department Battlefield Rules (*continued*)
save lives, 1-12
state-of-the-art care, 1-12
service component command, 3-3*c*, 3-11*c*
Automated Patient Evacuation System. *See* United States Air Force.
aviation brigade, 5-11*a*

battalion aid station. *See also* patient collecting point; treatment squad; United States Field Medical Card (DD Form 1380).
ambulance
platoon, 2-1*b*, 2-3*b*
squad, 2-1*a*, 2-2*a*—*b* and *d*
communications net, 2-2*e*
echelons of care, 1-10*a*
equipment, 4-7*a*(3), 5-2*h*
establishing, 5-2*h*, 5-10*g*(3), B-2
evacuation
from, 2-3*b*, 4-7*a*(3)(*b*)
to, 2-2*c*, 4-3*c*(4)(*b*), 4-7*a*(3)(*b*)—(*c*), 5-10*g*(6), 10-2*a*
minus, 5-4*a*
mobility, 4-5*a*
mountain operations, 5-2*h*
patient collecting points, 4-5*a*
reassessment, C-3*f*
reconnaissance operations, 4-7*b*(5)
recording treatment provided, C-2*b*
site selection, 5-10*g*(3)
treatment team, 4-5*a,* B-2
turn-in of individual weapons, 8-3*b*
blood management. *See* combat health logistics.

camouflage. *See* Geneva Conventions; international standardization agreements; extreme cold weather operations.
CASEVAC. *See* casualty evacuation.
casualty evacuation
augmentation, 1-4*b*, B-2
combat lifesaver, 4-2*d*
definition, 1-4*b*
en route care, 1-4*b*
general, 4-2*d*
security operations, 4-7*b*(2)
vehicles used, 4-3*b*(2)

CH-47 (Chinook) helicopter
description, 10-33
forest penetrator, E-24
interior, 10-34*a*
landing zone, 10-33*b*
litter supports, 10-34*b*
loading, 10-34*c*
checklists
command post, N-1
establishing unit area, N-2*b*
precombat, N-3
site selection, N-2*a*
choices of maneuver
envelopment, 4-7*a*(2)
infiltration, 4-7*a*(3)
penetration, 4-7*a*(1), 5-11*b*
turning movement, 4-7*a*(4)
civilians, 5-10*e*(1), B-2, G-5*c*(4). *See also* refugees.
clearing station. *See also* forward support medical company; main support medical company; United States Field Medical Card (DD Form 1380).
augmentation of evacuation assets, 3-7*b*
collocate with, 2-4*d*
combat stress control, 1-10*b*
echelons of care, 1-10
equipment, L-7*b*
establishing, 4-7*b*(5)
evacuation
from, 3-7*b*, 5-2*d*(2)(*g*)
to, 4-7*a*—*b*
preventive medicine, 1-10*b*
turn-in of individual weapons, 8-3*b*
whole blood capability, 1-10*b*
Coast Guard, B-2
combat
lifesaver
accompanying casualties, 1-4*b*(2), 4-2*d,* 8-9*b*(7)
Army special operations forces, 5-9*b*
echelons of care, 1-10
enhanced first aid, 1-4*b*(2), 8-9, 8-10*e*
initiating intravenous fluids, 5-10*g*(6)
intravenous fluids, 5-10*g*(6)
mass casualty situation, 1-9*d*, 10-12
medical equipment set, 10-12*c*
minefield operations, 8-9, 8-10*e*
monitor casualties, 1-4*b*(2)

combat
lifesaver (*continued*)
patient collecting points, 4-5*a*
reliance on, 4-3*c*(8)
role, 4-3*b*(2)
special operations forces, 5-9*a*
training, 1-10*a*, 8-10*e*
medic. *See also* combat health logistics; United States Field Medical Card (DD Form 1380).
ambulance team, 2-2*e*, 5-10*g*(6)
augmentation, 1-4*b*(2)
Echelon II, 1-10*b*
echelons of care, 1-10*a*(2)
emergency medical treatment, 1-4*b*(2), 5-10*g*(5)
employment, 4-3*b*
initiating intravenous fluids, 5-10*g*(6)
minefield operations, 8-9, 8-10
morphine administration, C-2*a*
patient collecting points, 4-5*a*
performance of duty, G-5*d*(4)
United States Field Medical Card (DD Form 1380), C-2*a*
vehicle assignment, 4-3*b*(2)
search and rescue, 5-12
stress control
aide/evacuation noncommissioned officer, 2-2*d*(1)
functional area, 1-9*b*
multinational operations, M-6*b*(8)
prevention, 1-10
stress induced performance deterioration, 1-3*a*
tactical standing operating procedure, G-3*b*
support hospital
clearing, 4-6*a*(6)
evacuation to, 4-12*i*, 6-3*a*, 6-4*b*(2), H-5
mission, 4-3*f*(2)(*b*)
combat health
logistics. *See also* property exchange.
ambulance
exchange points, B-2
platoon, 3-8*d*
backhaul, 2-2*d*(1), 2-3*b*, 7-4*d,* B-2, G-5*g*(2)
blood and blood products, 1-10*b*
cross-FLOT operations, 5-11*c*
desert operations, 5-4*a*
destruction procedures and policies, 5-11*c*
emergency movement, 3-7*b*
extreme cold weather operations, 5-5*e*

combat health
logistics (*continued*)
impact on theater evacuation policy, 1-6*e,* 1-7*b*
jungle operations, 5-3*b* and *d*
medical
company, ground ambulance, 3-8*a*
equipment set, 5-13, N-3*a—b*
evacuation battalion, 3-4*a*
logistics battalion, 3-4*e*
mountain operations, 5-2*h*
multinational operations, M-6*b*(3)
resupply of
combat medics, 2-2*c*, 4-3*c*(4)
medical equipment sets, 3-8*d*
units/elements, 4-3*d*(3), F-2*b*
shelf-life of medical supplies, 5-4*a*(3)
status, N-1
supply/resupply, G-5*g*(2)
tactical standing operating procedure, G-5*g*(2)
use of smoke, F-2*b*
support. *See also* Geneva Conventions; planning.
capabilities, 1-9*a*, 1-10
commander, 1-1*b*, 4-2*c*
conformity, 1-11*a*
conserve the fighting strength, 1-1*a*
continental United States base, 1-10*e*
continuity, 1-11*b*, 2-1*a*
continuum of care, 1-1*a*, 3-5
control, 1-11*c*
conventional, 5-9*a*
echelons of care, 1-10
effectiveness of resources, 4-2*e*
eligible beneficiaries, 4-7*b*(6), B-2
enemy capabilities, B-2
estimate, 1-3*b*, B-1, B-2
extreme cold weather operations, 5-5*e*
flexibility, 1-11*e,* 4-1*d*(1), 4-7*b*(3), 5-1, B-2
functional areas, 1-9*b*, B-1*a,* M-6*b*
general, 1-7
Geneva Conventions, A-6
health of the command, B-2
indigenous forces, 5-9*a*
infrastructure, 1-7*b*
jungle operations, 5-3
limitation, 4-7*a*(3)(*c*)

combat health
support (*continued*)
medical
regulating, 6-4*a*
troop ceiling, 4-8*b*(1)
mission, N-3*a*
mobility, 1-11*f*, 4-2*b*, 4-6*a*
mountain operations, 5-2
overlays, 4-3*c*, 5-10*g*(2), N-1
patient classification, 10-11*c*
plan, 1-3*b*, 4-3*c*(6), B-1
principles, 1-11
proximity, 1-11*d*
reimbursement, 4-7*b*(6)
requirements, 4-3*c*
resources, 1-1*b*, 1-5*c*—*d*, 1-6*e*, 1-9*c*, 1-11*e*, 4-6*a*
security, 5-3*c*
special operations forces, 5-9
system, 4-2*e,* 5-9a—*b,* B-1*a*
tactical situation, 1-11*c*—*d*
tailoring, 1-5*d*(5)
combating terrorism
antiterrorism, O-1, O-2*b*
assessment, O-4
considerations, O-3
counterterrorism, O-2*c*
definition, O-2*a*
general, O-1
medical evacuation, 4-8*b*(3)
communications. *See also* hoist rescue operations; United States Air Force.
administrative/logistics net, 6-12*a*
alternate means, 5-10*b*(3) and *g*(2)
ambulance platoon, 2-3*e*
brevity codes, 7-7*a*
call signs, 4-7*b*(1)
channels, 4-12*b*
checkpoints, 5-11*a*
cross-FLOT operations, 5-11*a*
desert operations, 5-4*a* and *c*
division medical operations center, 6-4*a*
encrypting request, 7-8
equipment, 5-4*a*(3), G-5*e*(8)
extreme cold weather operations, 5-5*f*, E-17*a*
frequencies, 4-7*b*(1), B-2
impact on, N-2*a*

communications (*continued*)
interpreters, B-2, B-4
jungle operations, 5-3*f*
landing zone, 10-25*d*(5)
liaison officers, B-2, B-4
line of sight radios, 5-10*b*(3)
medical
evacuation requests, 4-12*c*
regulating, 6-2*b*
military operations on urbanized terrain, 5-10*b*(3) and *e*(1)
mountain operations, 5-2*b*—*c*
naval operations, 5-7*a*(2)
net, 6-12*a*
patient administration net, 6-4*b*(2)
radio, relays, 5-3*f*(6), 5-4*c*(5)
radio (communications) silence, 6-2*b*, 6-4*c*
reduced ranges, 5-2*b*, 5-3*f*(6)
responsibilities for, G-5*e*(2)
secure means, 5-11*a*
security, G-5*d*(7) and *e*(8), O-1*a*
signal operating instructions, 5-11*c,* 7-2, 7-7*a*, 7-8*a,* G-5*d*(7)
Single Channel Ground and Airborne Radio Systems, 5-5*f*
sole user channel, 4-12*c*
status, N-1
tactical standing operating procedure, G-5*d*(5)
United States Navy, 5-7*a*(2)
covering force, 3-7*b*, 4-7*b*(2)
cross-FLOT operations, 5-11

Defense Medical Regulating Information System. *See* United States Air Force.
density altitude. *See* air ambulance; landing zones.
dental
advanced trauma management, 1-10*a*(2)(*b*)
functional area, 1-9*b*
multinational operations, M-6*b*(5)
oral and maxillofacial surgeon, 6-6*a*, 6-7*a*, 6-8*a*
patient disposition, 1-5*d*
support, 1-10*b*
Department of Veterans Affairs. *See* hospitals (hospitalization).
desert operations. *See also* landing zone; navigation.
acclimatization, 5-4*a*(2)
augmentation, 5-4*c*(3)
characteristics, 5-4*a*(3)
clothing, 5-4*b*(1)
communications, 5-4*a* and *c*

desert operations (*continued*)
discipline, 5-4*a*(2)
dust and sand, 5-4*a*—*b*
effects on equipment and supplies, 5-4*a*(3), 5-4*b*
environmental considerations, 5-4*a*
extreme cold weather operations, 5-5*a*
medical intelligence, 5-4*a*(1)
mountain training, 5-4*b*(2)
planning factors, 5-4*b*
prescribed load list, 5-4*b*
static electricity, 5-4*a*(3)
temperature, 5-4*a*
use of smoke, F-4*a*(4)
water discipline, 5-4*a*(2), 5-4*b*
wheel versus track vehicle, 5-4*a*(3)
wind, 5-4*a*(2), 5-4*c*(7)
directed energy weapons, 1-3*a*, 1-6*a*, F-2*a*
disease and nonbattle injuries
adverse impact, B-2
casualties, B-2
endemic diseases, 1-3*a*, 5-3*f*, 5-4*a*(2), B-2
environmental injuries (hazards), 1-2*d*, 1-3*a*, 5-4*a*(2), B-2
general, 1-1
increase of, 5-3*d,* B-2
jungle operations, 5-3*d* and *f*
medical personnel, B-2
orthopedic injuries, 5-2*e*
prevention, 1-10*a*, 1-12*c*
division
medical operations center
Army airspace command and control, 4-3*d*(3)(*a*)
augmentation, 4-3*d*(4)
coordination, 3-4*d*, 4-12*h*, 6-4
individual weapons and equipment, 8-3*b*
medical regulating, 4-12*h*, 6-3*e*, 6-4
monitoring ambulance assets, 6-4*a*
nonmedical transportation assets, 10-12
patient
disposition and reports branch, 6-4
tracking, 6-4*a*
planning, 4-2*d*
procedural, 6-4*a*
taskings, 6-4*b*
support command, 4-3*e*(4)
downed aircrew, 1-13, 4-12*d*, 5-11*a*
drop zone, 5-8*b*

echelons
above corps, 2-1*a*, 4-1*d*
of care
bypassing, 4-3*e*(1)
capabilities, 1-10
continental United States support base, 1-10*e*, 3-5, B-1*a*
Echelon I (unit), 1-4*a*(1), 1-10*a*, 4-8*b*(1)
Echelon II (division), 1-4*a*(1), 1-10*b*, 4-8*b*(1), 6-4*a*, 6-9*c*, 6-11*a*, B-2, C-2*c*
Echelon III (corps), 1-10*c*, 4-3*f*, B-2, C-2*d*, K-3
Echelon IV (communications zone), 1-10*d*, 4-3*f*, C-2*d*, K-3
Echelon V, K-3
point of injury, 4-8*b*, 8-10*e*, B-1*a*, K-2*a*
special operations forces, 1-10
emergency medical treatment, 1-4*b*(2), 1-9, 1-10*b*, 1-13, 2-2*c*—*d*, 2-3*c*, 4-3*c*, 4-6*b*(1), 4-7, 5-10*g*(5), 5-11*a*, 8-2*a*, 8-9*a*(5)(*d*), 8-10*d,* 10-1*b*, 10-3—4
en route medical care. *See* medical evacuation.
enabling operations
advance, flank, and rear guards, 4-7*b*(3)
integrated warfare operations, 4-7*b*(7)
passage of lines, 4-7*b*(1)
reconnaissance operations, 4-7*b*(5)
river crossing operations, 4-7*b*(4)
security operations, 4-7*b*(2)
unified action, 4-7*b*(6)
enemy prisoners of war. *See also* Geneva Conventions; hospitals (hospitalization); medical regulating; Prisoner of War Information Center.
ambulatory patients, 4-10*a*
collection point, G-5*c*(7)
disposition instructions, 4-10*c*
echelon commander, 4-10, A-5*b*
guards, 4-10, 6-11*e*, A-5*b*, B-2, *G*-5*c*(7)
litter patients, 4-10*a*
medical
care standard, 4-10*b*, 5-10*e*(1), A-5*a*
evacuation, 4-10, 6-11*e*, A-5*a,* B-2
regulating, 4-10*c*—*d*
military police, 4-10
remains, G-5*c*(4)
segregated from, 4-10, A-5*a*, B-2, G-5*c*(7)
tactical standing operating procedure, G-5*d*(7)
engineers
coordination requirements, 4-3*c*(9), Table 10-2
obstacle plans, 4-3*a* and *c*, 4-6*b*(2), N-1
support, 1-7*b*, 8-9, 8-10
enhanced position locator reporting system, 5-11*a*

environmental concerns
desert operations, 5-4*a*
estimate, B-2
extreme cold weather operations, 5-5*b*—*c*
jungle operations, 5-3
mountain operations, 5-2*b*
risk management, L-2*b*, L-7*d*
explosive ordnance, 8-9—10
extraction of patients (casualties)
Bradley infantry fighting vehicle, 4-3*c*(8), 8-8
burning vehicle, 8-2*a*
cross-FLOT operations, 5-11
downed aircraft, 5-11*a*
equipment, 5-11*a*
Kendricks Extrication Device, 8-8*c*(3), 9-6*b*
military operations on urbanized terrain (built-up areas), 5-10*f*, B-2, F-5
minefields, 5-13, 8-9—10, G-5*e*(4)
special operations forces, 5-9*c*
tanks, 4-3*c*(8), 8-7*a*
vertical extraction, 5-10*f*(2)
extreme cold weather operations. *See also* ambulance shuttle system; landing zone; patient collecting point.
ambient light, E-17*b*
augmentation requirements, 5-5*e*
camouflage, 5-5*f*
characteristics, 5-5*a*—*b*, E-17*a*
communications, 5-5*f*, E-17*a*
desert operations, 5-5*a*
environmental considerations, 5-5*b*, *c*, and *f*, E-17*a*
equipment maintenance, 5-5*e*
evacuation considerations, 5-5*e*
freezing factors, 5-5*f*
hoist rescue operations, E-17
ice, 5-5*c*, E-17*d*
leadership, 5-5*d*
litter evacuation, B-2
maintenance, 5-5*e*—*f*
mountain operations, 5-2, B-2
planning factors, 5-5*f*
preventing shock, 9-3, 9-10*d*—*e*
shelter, 5-5*f*
snow, 5-5
special equipment, B-2
static electricity, 5-5*f*, E-17*a*
temperature, 5-5*a* and *f,* E-17*c*
vehicle operation, 5-5*e*
water consumption, 5-5*d*—*e*

Field Medical
Card. *See* United States Field Medical Card (DD Form 1380).
Record Jacket (DA Form 4006), C-5
fire support plan, 4-3, 4-12 *d*
first
aid. *See also* combat lifesaver.
buddy aid, 1-10*a*(1)(*a*), 4-3*c*(8), 4-5*a*
enhanced, 1-4*b*, 1-10*a*(1)(*b*), 8-9*a*(8)
minefield operations, 8-9*a*
provision of, 1-4*b*(2)
reliance on, 4-5*a*
self-aid, 1-10*a*(1)(*a*), 4-3*c*(8), 4-5*a*
sergeant, 4-3*b*
Flight Control Center, 4-12*f*
forest penetrator. *See* hoist rescue operations.
forward
army and refueling points, 4-7*b*(1)
support
battalion, 4-3*d*—*e,* 4-12*,* 6-3*a*
medical company (division medical company)
air ambulance, 4-3*d*(3)
air assault operations, 5-8
ambulance platoon, 2-3, 4-3*d*
augmentation from, 4-2*d*
collocation with forward surgical team, 4-3*f*(2)
commander, 4-3*e*(2)
communications, 2-3*e*
evacuation
from, 4-3*e*(2), 4-12*e*, 6-3*a*, 6-4*b*—*c*, 6-9*c*, 6-11
to, 4-3*d*
operational control, 4-3*d*(3)
originating medical facility, 6-9*c*, H-2, H-6
reinforcement, 4-3*e*(4)
relocation, 4-3*e*(2)
treatment
platoon, 4-3*d*
squad, 10-12*c*
surgical team, 1-10*b*, 4-3*d* and *f*, 4-6*a*(6), 4-12*e*, 6-9*c*. *See also* area support medical battalion.

general hospital
evacuation
from, 6-8*c*
to, 4-3*f*(2)(*d*), 6-7*a*, H-5

Geneva Conventions. *See also* smoke; tactical standing operating procedure.
acts harmful to the enemy, F-3*a*
camouflage, 5-10*d*, 10-1*c*, A-2*b*, F-3*b*, G-5*b*(4), G-5*d*(5)
civilian casualties, 5-10*e*
combat search and rescue, 5-12
compliance, 1-3*a,* A-6
defense of patients and self, A-4, A-6*b,* B-2, F-3*a*
detained persons, 5-10*g*(6), B-2
disposition of captured medical supplies, G-5*d*(6)
distinctive markings (emblem) (Article 42, GWS), 5-10*d*, 5-12, 10-1*c*, A-2*a*, A-3*b*, F-3*a*, G-5*b*(4)
enemy prisoners of war, 5-10*e* and *g*, A-5, B-2, G-5*c*(7)
general, A-1, F-3*d*
humanitarian duties (Article 21, GWS), F-3
impression of impropriety, A-6*b*
intentional attack, F-3*a*
medical
aircraft, 1-3*a*, 5-12, A-3
equipment, F-3*a*, G-5*d*(6)
personnel, A-1*b*, A-3*a* and *e*, A-4, A5*b*, A-6*a*, F-3*a*
offensive
operations, 5-10*f*
weapons, A-4, A-6*b*
prisoners of war, A-3*e*
prohibitions, A-3*c*, F-3*b*
protections afforded, 1-3*a*, 4-3*a*, 5-10*d*, 5-12, A-3, A-4*a*, A-6, B-2, F-3*a*, O-3*b*
requirement to land, A-3*d*—*e*
smoke, F-3
tactical commander, A-6*a*
terrorist activities, O-3*a*
unit identification, A-2*a,* F-3*d*
veterinary units, A-2*a*
violations, A-6
weapons, A-4*a*, A-5*b*, A-6*b,* B-2
Global
Patient Movement Requirements Center. *See* medical regulating.
Positioning System, 2-2*e*
ground ambulance. *See also* ambulance driver and loading/unloading.
air assault operations, 5-8
airborne operations, 5-8
area support, 2-3*d*
backhaul, B-2
bus, 10-2*b*, 10-9
carrying water, 5-5*e*
characteristics, 10-2*a*
communications, 2-3*e*, 3-7*c*, 6-4*b*

ground ambulance (*continued*)
configuration, 10-1*a*, 10-2*c*
contact with supported unit, 4-3*c*, 4-6*a*(7)
corps asset, 4-1*d*(1)
crew, 5-2*d*(2)(*i*), 5-10*g*(5), B-2, C-2*a*, N-3*b*
cross-FLOT operations, 5-11*b*
deadlined, 5-5*e*
desert operations, 5-4
dependent upon, 3-7*d*
description, 10-1
distinctive markings. *See* Geneva Conventions.
echeloning, 4-6*a*(6), 4-7
escort, B-2
evacuation platform, B-2
extreme cold weather operations, 5-5*e*
field ambulances, 10-2
forward positioning (sitting), 4-3*c*—*d,* 4-7*b*, 6-4*b*
general, 10-1
support, 6-4*b*
ground guides, 5-4*c*(6), 10-4, G-5*h*
loading and unloading procedures, 10-3, 10-5—10
M113, armored, personnel carrier, 2-2*b*, 10-2*a* and *c*, 10-10
M792, truck, ambulance, 10-2*a*, 10-8
M996, truck, ambulance (HMMWV), 2-2*b*, 3-8*d*, 10-2*a*, 10-6
M997, truck, ambulance (HMMWV), 2-2*b*, 3-8*d*, 10-2*a*, 10-6
M1010, truck, ambulance, 10-7
maintenance, 5-5*e*, 10-3
means of evacuation, 7-2
medical
equipment set, 3-8*d*, 10-1*a*, 10-2*c*, N-3*b*
Force 2000, 3-5—8
regulating, 6-4*b*(2)
military operations on urbanized terrain, 5-10
mobility, 1-11*f*, 4-2*b*, 4-5*e*—*f*, 10-2*a*
module, 2-1*a*
mountain operations, 5-2*c*
movement of medical
personnel and equipment, 3-7*b*, 4-3*c*(4), 10-3
supplies, blood, and blood products, 10-3
nuclear, biological, and chemical environment, 5-6*d*
oxygen, N-3*b*, L-7*b*
primary means, 3-5
road network, 3-7*c,* 4-3*a*, 5-3*d*
securing patient, 10-3
special operations forces, 6-12*c*

ground ambulance (*continued*)
squad, 2-1*a*
staffing, 10-1*b*
turnaround, 5-10*c,* N-2
weapons, A-4*a*
weather, G-5*d*(3)
guards, 6-11*e*. *See also* enemy prisoners of war.

Hague Conventions, A-1*a*
hoist rescue operations. *See also* litter; smoke; winds.
altitude, E-14*b,* E-15*a*(1)
approved equipment, E-19
auxiliary fuel tanks, E-14*b*(2)
cable weight cover, E-38, E-39*b*
center of gravity, E-8c(4)
communications, E-3—4, E-6, E-16, E-17*a*
coordination, E-6*c*
copilot responsibilities, E-2*b*, E-8*c*(1), E-9*b*(2), E-12*c*
crew functions, E-2
cross-FLOT operations, 5-11*a—b*
density altitude. *See* air ambulance.
departure phase, E-6*d*
desert operations, 5-4*a*(3)
disabled or unconscious patient, E-1*a*, E- 11, E-24
dual-man hoist, E-45*c*
emergency procedures, E-20
environmental conditions, E-6*c*, E-7, E-13—14, E-17
equipment maintenance, E-29, E-33, E-37, E-41, E-46
extreme cold weather operations, E-17
failure, E-20*d*
flotation devices, E-8*c*, E-12*a*, E-22, E-23*c*, E-28*g*, E-31—32, E-39, E-43
fluorescein sea marker, E-8*a*(1)
forest penetrator, 5-2*d*(2)(*f*), 5-3*f*(9), E-21—25, N-3*a*
general, E-1, E-5, E-7, E-13, E-18, N-3*a*
ground personnel, E-17*a*, E-20*a*, E-25*b*, E-32, E-36, E-40*b*
hand signals, E-4*b*
hoist
cable, E-8*c*(2), E-19*a* and *c*, E-20*a* and *d—e*
cutter, E-2*b*
operator responsibilities, E-2*c*, E-8, E-9—12
icing, E-15*c*, E-17*d—e*
illumination devices, E-10*a—b*
inadvertent landing, E-20*a—b*
individual equipment and weapons, E-32*d*, E-36*e*
inert patient recoveries, E-11—12

hoist rescue operations (*continued*)
insert medical personnel and equipment, 5-10*b*(2)
jungle operations, 5-3*f*(9), E-16
land recovery operations, E-9
lifeline, E-19*d*
litter, 9-2*a*(5), E-19*e*, E-28, E-36
marine locator marker, E-8*a*(1)
marking patient position, E-6*a*, E-8*a*—*b*
medic responsibilities, E-2*d*, E-11, E-26
medical personnel and equipment 5-10*b*(2)
meteorological factors, E-14—15, E-17*e*
military operations on urbanized terrain, 5-10*b*(3)
mountain operations, 5-2*d*(2)(*f*), E-15
night
operations, E-7, E-10, E-17*b*
vision goggles, E-10*b*, E-17
operational
phases, E-5, E-6, E-8*a*—*c*, E-9
terminology, E-4*a*
pattern phase, E-6*b*, E-8*b*, E-9*b*
peacetime recovery, E-21
pendulum action, E-19*b*, E-20*d*
performance planning card, E-14*b*
personnel
locator system, 5-11*a*
requirements, E-1*a*
pilot-in-command responsibilities, E-2*a*, E-8*c*(1), E-9*b*—*c*, E-12
planning, E-14—15
power available, E-8*c*, E-9*c*, E-15*a*(2)
procedures, E-25*g*—*j*
protective gloves, E-19*c*
recovery phase, E-6*c*, E-8*c*, E-9*c*
risk, E-21*c*
safety
considerations, E-17*e*
factors, E-18—19
harness, E-12*a*, E-19*d*
straps, E-23*b*, E-25*d*, E-31, E-35*b*
signaling devices, E-16*b*
single-man hoist, E-45*b*
spacial disorientation, E-8*c*(1), E-10*a*(2)
staffing, E-1*a*
static electricity, E-8*c*(1), E-9*b*(2), E-25*b*, E-32*b,* E-36*b*
survivor's sling, E-38—42
tactical considerations, E-9*c*, E-21

hoist rescue operations (*continued*)
tag line, E-19*e*, E-32*a*—*b*, E-36*i*
terrain factors, E-13
vest, hoist operator, E-12*a*, E-19*d*, E-21, E-26, E-43—46
visual preparation phase, E-6*a*, E-8*a*, E-9*a*
water recovery operations, 9-2*a*(7), E-7—8, E-10, E-12, E-20*b*, E-22, E-27—28, E-30—31, E-39, E-43, F-4*c*
weak link, E-19*e*
weight bag, E-19*e*
hospitals (hospitalization). *See also* specific type of hospital.
beds, 1-5*d*, 1-7*a*, 1-8, 6-2*b*, 6-3, 6-4*b*, 6-7*b*
civilian, 1-10*e*, 6-8*b*
corps, 4-3*e*(1), 4-10*b*, 4-12*e*, 5-8*d,* 6-4*a*
Department of Veterans Affairs, 1-10*e*, 6-8
destination, 6-3*g*, 6-4*b*, 6-8
echelons above corps, 1-8, 6-3, 6-6
Echelon III, 6-7*a*
echelons of care, 1-10, 4-10*b*
enemy prisoners of war, 4-10*b*
evacuation between hospitals, 3-7*b*, 3-8*d*, 4-1*d*(1), 6-3*b*, 6-5, L-7*a*
evacuation to 4-1*d*(1), 5-8*d*, 6-3*a*
functional area, 1-9*b*
in theater, 1-7, 1-8
limited assets, 4-8*b*(1)
mission, 4-3*f*
moving, 6-5*a*
multinational operations, M-6*b*(2)
physician, 6-6*a*, 6-7*a*
property exchange, 4-4*a*
provision of, 6-3*f*
receiving, 6-5*c*, 6-6*h*
requirements for, 1-7*b*
system, 1-5, 4-3*f*
theater evacuation policy, 1-5
host-nation support, 5-2*d*(2)(*i*), 6-3*l*, 6-5*d*, 10-12*b*, B-2, O-4*d*

icing, 5-2*d*(2)(*c*), E-15*c*, E-17*d*—*e*
improvised litter. *See also* litter.
bed sacks with poles, 9-2*b*(2)
blanket, 9-2*b*(2)
blanket with poles, 9-2*b*(2)
construction, 9-2*b*
jacket with poles, 9-2b(2)
packsaddle, 9-8
patient securing strap 9-2*a*(2)
travois, 9-7, 9-12

individual weapons and equipment, 8-3*b*, E-36*e*, G-5*d*
inspections
aircraft, 3-12*c*(3)
calendar, E-33*a*, E-41*a*
general, E-18
marking, E-41*c*
preflight, E-33*b*
semirigid litter, E-34*a*
serviceability, E-18*b*, E-33, E-46*b*(1)
upon issue, E-41*a*(1)
visual, E-41*b*
interagency operations, 4-7*b*(6)
intermediate staging base, 4-8*b*(2)
international standardization agreements
Air STD
44/36A, 4-*1d*, *7*-3
61/71, 7-3, K-2—5
QSTAG
230, C-2
435, 4-4*c*
436, 4-4*c*
470, C-2
512, A-2*a*
519, 9-2
529, 7-3
STANAG
2040, 9-2
2087, 7-3, K-2*a*
2128, 4-4*c*
2132, C-2
2350, C-2
2454, A-2*a*
2931 OP, 10-1*c*, A-2*b*, G-5*b*(4), N-2*b*
3204, 4-1*d*, 7-3, K-2—5

Joint
Military Transportation Board. *See* medical regulating.
operations, 4-7*b*(6), G-4*b*(4)
jungle operations
characteristics, 5-2*b*, 5-3*d*
clothing, 5-3*f*(2)
combat operations, 5-3*c*
communications, 5-3*f*(6)
convoys, 5-3*c*
disease and nonbattle injuries, 5-3*f*(3)

jungle operations (*continued*)
dual system, 5-3*b*
equipment, 5-3*f*(5)
general, 5-3*a*
litter patients, 5-3*e*, 9-8, B-2
positioning assets, 5-3*c*
references, 5-3*g*, E-16*c*
resupply, 5-3*b*
signals, E-16*b*
special considerations, 5-3*f*
training, 5-3*f*(4)

Kendricks Extrication Device, 9-6*b*
Korean War, 4-7*a*(4)

landing zones. *See also* air ambulance; Army fixed-wing aircraft; smoke; winds.
approach zones, 5-2d(2)(*j*), 5-4*c*(1), 10-25*b*
Army fixed-wing aircraft, 10-30
availability, 5-2*b*
CH-47 (Chinook) helicopter, 10-33
communications, 5-4*c*(5), 10-25*d*(4)
criteria, 10-25*b*
cross-FLOT operations, 5-11*b*
density altitude, 5-2*d*(2)(*a*)
desert operations, 5-4*a*—*c*, F-4*a*(4)
drop zone, 5-8*b*
electronic triangulation, 10-25*d*(5)
establishing, 5-10*g*(3), N-1*a*
extreme cold weather operations, 5-5*e*
FM homing, 10-25*d*(5)
for contaminated aircraft, N-2*a*
ground contact personnel, 7-4*e*, 10-25*d*(4)—(5), 10-28, F-4*a*(2)
helicopter (helipad), 4-3*d*(3)(*a*), 10-25, G-5*e*(6)
identification, 10-25*d*, F-4*a*(2)
jungle operations, 5-3*f*(8), E-16
light helicopter minimum, 10-25*b*
limited use, 5-4*a*(3) and *c*(7)
location, G-5*e*(6)
major terrain feature, 5-4*c*(1)
marking, 5-4*c*(1), 10-25*c*, 10-30, F-4*a*(1)
military operations on urbanized terrain, 5-10*e*(2)
mountain operations, 5-2*b*
night operations, 10-25*d*(3)
obstacles (obstructions), 5-4*c*(1), 10-25*b*—*c*
open flame, 10-25*d*(3)

landing zones (*continued*)
responsibilities, 10-25*a*
road network, 5-2*c*
selection, 5-5*e*, 7-4*e*, 10-25*b*
unavailability of, 5-3*f*(9), E-24
vertical/short takeoff and landing aircraft, 10-24
wind, 5-4*c*(1) and (7)
Law of Land Warfare, A-1*a*
lines of communications, 1-1, 4-7*a*(4), 5-3*c*, 5-4*a*(2)
litter. *See also* improvised litter; litter obstacle course; jungle operations; loading/unloading.
accessories, 9-2*a*
ascending, 9-5*d*, 9-12*b*
ascending steep slope, 9-12*b*
bearers, 4-7*a*(3)(*b*), 5-2*c* and *f*, 8-3, 9-5, 9-9*b*, 9-12, J-2, J-4—8, 10-3, 10-5*a*—*b*, 10-23,10-26*b*, 10-28*c*, B-2, L-7*h*
carries, 4-3*c*(4), 5-3*e*, L-7*h*
carrying, J-7, B-2
close litter, J-5*d*
commands, 9-5, 9-12, J-3—6, 10-5*b*
descending, 9-5*d*, 9-12*c*
steep slope, 9-12*c*
dressed, 9-3
evacuation, 5-2, 5-3*e*, 5-6b, 9-1, 9-10—13, B-2
extreme cold weather operations, B-2
folding aluminum, 9-2*a*(2)—(3)
ground litter, J-5*b*
hoisting, E-19*e*, E-26—37
horizontal hauling line, 9-13
improvised, 9-2*b*
individual
equipment, 9-5*e*, E-36*e*
weapons, E-32*d*, E-36*e*
loading patient, 8-6*a*(4), 9-5*e*, J-6, E-35*a*
lowered from cliff, 9-12*d*
means of evacuation, 5-3*e*, 7-2
medical resupply, 4-7*a*(3)(*b*)
military operations on urbanized terrain, 5-10*e*
mountain operations, 5-2*f*, 5-3*e*, 9-9—12
nonmedical personnel, 5-10*g*(5)
nuclear, biological, and chemical environment, 5-6, 9-3
obstacles, 9-5*c*, 9-13
course
construction, J-8*a*
fording streams and deep trenches, J-8*b*(3)
going downhill, J-8*b*(5)

litter
obstacles, 9-5*c*, 9-13
course (*continued*)
going uphill, J-8*b*(4)
surmounting
fence or low wall, J-8*b*(1)
high wall, J-8*b*(2)
open litter, J-5*c*
packsaddle, 9-8
patient, 2-2*c*, 4-10*a,* 5-2*f*, 9-13, K-3*a*
restraints, 9-2*a*(2)
securing strap, 9-2*a*(2), 9-4, 9-6*a,* 9-11, K-3*b*
poleless
nonrigid, 9-2*a*(5)
semirigid, 9-2*a*(4), 9-11, E-34—37
procure litter, J-5*a*
return litter, J-5*e*
spine board, 9-6
squads, 9-9*a*
standard, 9-2*a*
collapsible, 9-2*a*(1), 9-11
Stokes, 9-2*a*(6), 9-11, 9-13, E-30—E-33
support unit. *See* UH-60A (Blackhawk) helicopter.
surmounting obstacles, J-8
teams, 4-7*a*(3)(*b*), 5-2*c*(3), 5-3*e*, 5-10*e,* B-2
training, J-1—2, J-4, B-2
travois, 5-2*d*(2), 9-7, 9-12
loading/unloading. *See also* ambulance driver; litter; medical aidman.
Army fixed-wing aircraft, 10-30
bus, 10-9*c*—*d*
CH-47 (Chinook) helicopter, 10-33
from evacuation platform, L-7*f*
ground ambulances, 10-3—10
litter carry, J-7*b*(4)
M113, carrier, personnel, full-tracked, armor, 10-10
M792, truck, ambulance, 10-8
M871, semitrailer, cargo, 10-17
M977, truck, tactical, heavy expanded mobility, 10-16
M996/M997, truck, ambulance, 10-6*b*—*c*
M998, truck, cargo/troop carrier, 10-13—14
M1010, truck, ambulance, 10-7
M1081, truck, cargo, medium tactical vehicle, light vehicle air drop/air delivery, 2 1/2 ton, 10-20
M1085, truck, cargo, medium tactical vehicle, long-wheel base, 5 ton, 10-18
M1093, truck, cargo, medium tactical vehicle, light vehicle air drop/air delivery, 5 ton, 10-19
main support battalion, 6-3*a*

loading/unloading (*continued*)
mountain operations, 5-2
nonmedical ground assets, 10-11—20
patient, 5-2*d*(2)*j*, 8-6*a*(4), J-6, E-29*b*, E-36*a*
pilot instructions, 7-4*e*
prepared for, 6-3*m—n*
property exchange, 10-3
responsibilities for air ambulances, 10-23, 10-26*a*
rotary-wing aircraft, 10-26
safety measures, 10-3, 10-26*b*
spall liner, 10-10
truck, cargo, 2 1/2 ton, 10-20
truck, cargo, 5 ton, 10-19
UH-1H/V (Iroquois) helicopter, 10-28
UH-60A (Blackhawk) helicopter, 10-27
United States Air Force, 10-35—36
main support medical company
ambulance platoon, 4-3*e*(3)
area support MEDEVAC team, 4-12*e*
augmentation from, 4-2*d*, 10-12*e*
collocated with, 3-12*d*(2), 4-3*e—f*
Echelon II, 1-10*b*
evacuation from, 4-3*f*, 4-12*e*, 6-3*a*, 6-4*b*
forward surgical team, 4-3*f*
offensive operations, 4-3*c*(6)
originating medical facility, 6-11*a*, H-2, H-6
patient holding squad, 4-3*e*(2)
treatment
platoon, 4-3*e*(3), 4-12*g*
squad, 10-12*c*
manual
carries. *See also* manual evacuation.
arms carry, 8-6*a*(4)
bearers, 8-3, 8-6
casualty
handling, 8-2*a*, 8-3*a*
treatment, 8-2
cradledrop carry, 8-6*a*(10)
dressings, 8-2*d*
fireman's carry, 8-6*a*(1)—(2)
alternate method, 8-6*a*(2)
raising a casualty, 8-6*a*(3)—(6)
four-hand seat carry, 8-6*b*(4)
fractures, 8-2*c*
general, 8-1, 8-4

manual
carries (*continued*)
individual weapons, 8-3*b*
injury evaluation, 8-2*b*
load bearing equipment carries, 8-6*a*(11)—(13)
mode of evacuation, 4-3*c*(4), B-2
neck drag carry, 8-6*a*(9)
one-man carries, 8-6*a*
pack-strap carry, 8-6*a*(6)
pistol-belt
carry, 8-6*a*(7)
drag, 8-6*a*(8)
positioning, 8-5
requirement for, B-2
saddleback carry, 8-6*a*(5)
special techniques, 8-7
supporting carry, 8-6*a*(3)
two-hand seat carry, 8-6*b*(5)
two-man arms carry, 8-6*b*(2)
two-man carries, 8-6*b*
two-man fore-and-aft carry, 8-6*b*(3)
two-man supporting carry, 8-6*b*(1)
evacuation. *See also* manual carries.
bearers, 8-3—4, 8-6
burning vehicle, 8-2*a*
considerations, 8-4
general, 8-1
lifesaving measures, 8-2*b*
nuclear, biological and chemical environment, 5-6*b*
mass casualty situation, 1-9*d*, 4-2*d*, 4-3*b*(2), 4-8*b*(3), 5-7, 6-5*a*, 10-7, 10-12, B-2, G-5*j*, L-7*a*, O-4
medical aidman, 2-2*c*, 3-8*d*, 10-4—5
medical company, air ambulance. *See also* air ambulance; air crash rescue support; UH-1V (Iroquois) helicopter; UH-60A (Blackhawk) helicopter.
air ambulance platoon, 3-12
air assault division, 5-8*d*
airborne operations, 5-8*d*
aircraft maintenance platoon, 3-12*c*
air crash rescue (less fire suppression), 3-11*b*, 4-12*d*
allocation, 3-10*b*
area support MEDEVAC
section, 3-11*b*, 3-12*a*
team, 3-11*b*
assignment, 3-2*a*, 3-10, 4-1*d*(1)

medical company, air ambulance (*continued*)
aviation
brigade, 4-3*d*(3)
intermediate maintenance, 3-11*c*(2)
unit maintenance, 3-3*b*, 3-11*b*
capabilities, 3-11*b*
communications, 3-11*c*(1)
company headquarters, 3-12*a*
coordination, 4-12
cross-FLOT operations, 5-11
dependent upon, 3-11*c*
direct support, 4-12*d*
flight operations platoon, 3-12*a*
forward support MEDEVAC team, 3-12, 4-3*d*—*e*
functions, 3-12
general, 3-9
jungle operations, 5-3*b*
mission, 3-11*a*, 4-12*d*
organization, 3-12
refueling, G-5*h*
medical company (division rear area). *See* main support medical company.
medical company, ground ambulance. *See also* ground ambulance; nuclear, biological, and chemical environment
allocation, 3-6*b*
ambulance
platoon, 3-8*c*, 4-3*e*(3)
squad, 3-8*d*, 4-3*e*(3)
assignment, 3-2, 3-6, 4-1*d*(1)
attached, 4-3*e*(4)
capabilities, 3-7*b*
combat zone 3-8*d*
communications, 3-7*c*
zone, 3-8*d*
company headquarters section, 3-8*a*—*b*
dependent upon, 3-7*d*
direct support, 4-3*e*(4)
employment, 3-7*a*
functions, 3-8*b*
general, 3-5
jungle operations, 5-3*b*
medical
equipment sets, 3-8*d*
supply, 3-8
mission, 3-7*a*
operational control, 4-3*e*(4)
organization, 3-8

medical evacuation. *See also* mass casualty situation; nonmedical transportation assets; nuclear, biological, and chemical environment; patient's medical condition; planning; smoke; theater evacuation policy.
advance, flank, and rear guards, 4-7*b*(3)
after-action record, Appendix I
ambulatory patient, 4-3*c*(4), 5-2*d*(2)(*h*), 5-10*g*(5)
area support, 4-3*b*(2)
Army special operations forces, 6-12
assets management, 1-11*c*, 3-1, 3-3*a*, 3-7*a*, 4-2*c*, 5-4*c*(7), 5-6*c*, 6-4*a*, B-2
attack, 4-6*a*(7)(*c*), 4-7*b*(5), 5-11*a*
augmentation, 4-3*c*(1), 5-5*e,* B-2, Q-2*a*
availability of resources, 4-1*f*, 4-2*c*, 4-3*a*, 6-2*b*, 6-3*e* and *g*
basic considerations, 4-3
booby traps, 5-10*f,* 8-10*a*
by higher echelon, 1-4*a*(1), 4-2*a*
bypassing echelons of care, 4-2*e*, 4-3*e*(1)
capabilities, B-2, App Q
carrying patients forward, 4-7*b*(5)
clearing the battlefield, 4-2, 5-10*g*(3)
collecting (acquiring) patients, 4-1*b*, 4-2
collection of information, 7-6
company aid post, 4-3*c*(4)
continuity of care, 2-1*a*
continuum of care, 4-1*c*
convoy, 4-5*c*(4), 4-6*a*(7), 5-3*c,* 5-4*b*(2), G-5*g*(4)
coordination, 4-*3c*(3), 5-2*c*(3), 6-3*i*, 6-4*a*
corps assets, 4-7*a*(2)
covering forces, 4-7*b*(2)
cross-FLOT operations, 5-11
dedicated assets, 4-3*c*(4), 4-8*b*(2)
defensive operations, 4-6*b*, F-2
definition, 1-4
desert operations, 5-4*c*
division, 2-1, 2-3, 4-1*d*(1)
Echelon I, 2-2, 4-8
Echelon I (corps), 2-4
Echelon II, 2-3—4, 4-8
emergency medical intervention, 1-4*b*(2), 4-1*b*, 10-3
enemy prisoners of war. *See* Geneva Conventions.
en route medical care, 1-4*b*, 2-1*a*, 2-2*d*, 2-3*b*, 2-4*c*, 3-8*d*, 3-11*b*, 4-1*b* and *d*(2), 4-2, 4-3*e,* 4-8*b*, 4-12*g*, 5-11*b*, 6-12*b*, 8-10*e*, 10-4, 10-5*a*, 10-11*c*, 10-12*d*, 10-21, B-2, G-5*j*, H-9, H-10
envelopment, 4-6*a*(7)(*b*), 4-7*a*(2) and (4)
estimate, B-1, B-2
evacuation delay, 1-7, 5-3*d*, 5-5*c*
exploitation and pursuit, 4-6*a*(7)(*b*)
extreme cold weather operations, 5-5

medical evacuation (*continued*)
fire support plan, 4-3*a*
for US Marines, 5-7*d*
from lower echelon, 1-4*a*(1), 4-2*a*
general, 1-7, 4-3*a*
high capacity air ambulance, B-2
improvisation (improvise), 4-7*a*(3)(*b*), 5-1, 5-2*h*—*i*
increased morale, 4-2
infiltration, 4-7*a*(3)
integrated warfare operations, 4-7*b*(7)
jungle operations, 5-3
language, 7-4*b*
lessons learned, 4-1*a*
lines of patient drift, 4-3*c*(3), B-2
linkup, 5-11*b*
locating casualties, 5-10*b*(3)
maintain contact, 5-10*g*(3)
military operations on urbanized terrain, 5-10
minefield operations, 5-13, 8-9—10
mission request, 4-12*b*
mobility, 1-11*f*, 4-2*b*, 4-6*a*(6), 10-2*a*
modes (means), 1-6*c*, 4-1*b*, 4-2*c*, 4-3*c*(4), 5-2*c*, 5-6*c*, 6-4*b*, 6-6*h*, 7-2
mountain operations, 5-2, 5-4*b*(2)
movement to contact, 4-3*c*(5), 4-6*a*(7), 4-7*b*(5)
nonmedical search teams, 5-10*e*(1)
offensive operations, 4-3*c*(6), 4-6*a*, F-2
out of theater, 4-8*b*(1)
overevacuation, 4-2*e*, 4-3*e*(1), 4-7*b*(1)
overlays, 2-3c(1), 4-3*c*(1), 4-5*a*, 4-6*b*, 5-2*c*(6), 5-10*c*, B-1*a*, B-2, B-4, N-1, N-3*b*
passage of lines, 4-7*b*(1)—(2)
patient stability, 1-7*c*, 1-10, 1-12*c*, 4-3*f*(1), 4-8*b*, 4-10*b*, 5-9*b*, 9-10*e*, 10-36*f*
penetration, 4-7*a*(1)
plan, 4-6*a*(2), 4-7*b*(2), B-3
precedence, 1-10*b*, 3-9, 4-1*d*, 7-3, 10-12*d*
priority (prioritize), 1-4*b*(2), 4-1*d*(2), 4-3*d*(3), 5-2*c*
procedures, 4-3*b*(2)
railway car capabilities, Q-4
reconnaissance operations, 4-7*b*(5)
reducing disability, 4-2
relaying request, 7-9
request
format, 7-5, 7-7*b*
procedures, 4-3*b*(2), 7-1, 7-5, 7-7*a*, 7-8
requesting units responsibilities, 7-4
requests, 2-1, 4-3*b* ,4-12*b*, 6-3, 6-5*d*, 6-7*a*, 6-8, 6-12
requirements, N-3*a*

medical evacuation (*continued*)
resources, 1-4*b*
responsibilities, 1-4, 7-4
retrograde operations, 4-6*b*(2)
river crossing operations, 4-7*b*(4)
road network, 4-3*a*, 4-5*b*(3), 5-2*b*, 5-3*d*, 5-4*b*(2), 5-5*e*, B-2, N-2
routes, 2-2*d*(1), 2-2*e*, 2-3*c*(1), 4-3*c*, 4-5*a*, 4-7*a*—*b*, 5-5*e*, 5-10*e*(1), 5-11*c*, 7-2, 9-10, 10-12, B-2, L-7*h*
route selection factors, 4-3*c*(3)
security operations, 4-7*b*(2)
selection of patients for, 1-5*c*
special equipment, 5-10*b*(1), B-2
specific environments, 5-1
standardization of operations, G-5*e*
strip maps, 2-3*c*(1), 4-3*c*(1), 5-2*c*(6), 5-10*g*(2), N-3*b*
survivability, 4-1*e*, 4-5*b*(3), 5-5*f*
synchronization, 4-1*c*, 5-1
system, Chapter 4, 5-9*c*
tactical
commander, 4-2, 5-9*b*, 5-11*b*
situation, 4-2*c*, 5-10(*c*), 6-2*b*
task organizing, 4-1*d*(1), 5-11, 6-4*c*, G-5*e*(9)
teams, 4-7*b*(3), 5-11*a*, B-4
tenets, 4-3*a*
time factor, 1-11, 1-12*c*(2), 4-3*c*(3), 4-6, 5-2*c*, 5-4*c*(3), 5-11*c*, B-2
to continental United States (support base), 1-5*a,* 1-6c*,* 1-10*e,* 6-3*i*, 6-8*a*
to echelons above corps, 1-8, 6-8
traditional support, 4-8*b*(4)
triage, 4-1*b*
trigger mechanism, B-2, B-4
turning movement, 4-7*a*(4)
under radio silence, 6-4*c*
unified operations, 4-7*b*(6)
versus transportation, 1-4, 10-11*c*, 10-12
medical evacuation battalion. *See also* Army airspace command and control; division medical operations center; planning; return to duty; tactical standing operating procedure.
airborne operations, 5-8*d*
assignment, 3-2*a*, 3-6*a*, 3-10*a*
aviation medicine, 3-3*b*, 3-4*b* and *g*
battalion
headquarters section, 3-4*b*, G-5*b*(2)
surgeon, 3-4*g*
capabilities, 3-3*b*
command
and control, 4-1*d*(1)
post, G-5*b*(1) and (3), N-1

medical evacuation battalion (*continued*)
communications, 3-3*b*, 3-4*d*, 3-8*b*
coordination, 3-3*b*, 3-4*d*
corps, 4-3*e*(2)
cross-FLOT operations, 5-11*c*
dependent upon, 3-3*c*
detachment headquarters section, 3-4*a* and *f*
general, 3-1, 4-1*d*
headquarters and headquarters detachment, 3-4*a*
interhospital transfers, 4-3*f*(3)
medical
brigade, 3-2*a*—*b*
command, 3-2*a*—*b*
company, air ambulance, 3-2*b*—*c*, 3-10*a*
company, ground ambulance, 3-2*b*—*c*, 3-4*d*, 3-6*a*
group, 3-2*a*
mission, 3-3*a*
organization, 3-4*a*
required support, 3-2*c*
responsibilities, 4-12*g*
S1 section, 3-4*a*
S2/3 section, 3-4*a* and *d*, 4-2*d,* G-5*b*(1)
S3 air, 3-4*d*, G-5*b*(2)
S4 section, 3-4*a* and *e*
supported divisions, 4-3*f*(3)
tactical operations center, G-5*b*(2) and *e*
task organizing, 4-1*d*(1), G-4*b*(3)
taskings, 4-3*f*(3)
treatment team, 3-4*g*
Medical Force 2000, Chapter 3
medical intelligence, 1-3, 5-4*a*(1)
medical platoon. *See also* battalion aid station.
ambulance section, 2-2*a,* 4-3*c*(1)
ambulance squad, 2-1*a*, 2-2*a*, 4-3*c*(1)
ambulance teams, 2-2*c*, 4-3*c*
augmentation, 4-3*c*(1)
communications, 2-3*e*, 4-3*c*(2)
covering force, 4-7*b*(2)
medical operations officer, 2-2a, 4-3*c*(1)
mission, 2-2a
operational control, 4-3*c*(4)(*a*)
operations plan, 4-3*c*(1)
planning, 4-3*c*(1)
platoon leader, 2-2*a*, 2-3*c*(1), 4-3*c* and *e*
reinforcement, 4-7*a*(3)(*b*)

medical platoon (*continued*)
sergeant, 2-3*c*(2)
staffing, 2-2*a*
treatment
squad, 4-3*d*
team, 4-3*d*
Medical Reengineering Initiative, 6-4*b*, 6-5*c*, App D
medical regulating. *See also* division medical operations center; United States Air Force.
coordination 3-3*b*
current bed status, 6-2*b*, 6-3*d*
definition, 6-1
destination airfield, 6-6*d* and *h*
destination facility, 4-1*d*(2), 4-2*c*, 4-10*d*
determining factors, 6-2*b*
enemy prisoners of war, 4-10*c*—*d*
from division, 4-12*h*, 6-4
general, 1-1, 6-1
Global Patient Movement Requirements Center, 6-3*f*—*g*, 6-8
intertheater, 6-3*c*, 6-8
intracorps, 6-3*a*
intratheater, 6-3*b*
Joint Military Transportation Board, 6-3*o*
medical
brigade, 4-1*d*(1), 4-12*h*, 6-4*b*, 6-5*d*, 6-6*b*, 6-8*c*
command, 6-6, 6-7
group, 4-1*d*(1), 4-12*h*, 6-4*b*, 6-5, 6-6*b*, 6-7
naval ships, 5-7*b*
office(r), 4-1*d*(1), 6-3, 6-4
originating medical facility, 6-6*d*, 6-9—11, B-2, H-2, H-6, H-7, H-8, K-2
patient
accountability, 6-3*e*
administration
nets, 6-4*b*
office (patient administrator), 6-3*d* , 6-5*b*, 6-6*a*, 6-7*a*, 6-8*a*
tracking, 6-4*a*
plan, 6-12
purposes, 6-2*a*
radio silence procedures, 6-2*b,* 6-4*c*
special operations forces, 6-12
surgical backlog, 6-2*b*, 6-3*e*, 6-5*a*
terminology, 6-3
Theater Patient Movement Requirements Center, 6-3*f*—*g*, 6-6, 6-8
theater surgeon, 6-3*f*
within
echelons above corps, 6-3*b,* 6-7
combat zone, 6-5

medical threat
checklist, N-3*a*
definition, 1-2*d*, 1-3*a*
increase in, B-2
intelligence and security annex, G-5*d*(1)
medical waste, L-7*c*
Military Assistance to Traffic and Safety Program, 4-9*c*
military operations on urbanized terrain (built-up areas). *See also* smoke.
aeromedical evacuation, 5-10*e*(2)
characteristics, 5-10*a*
communications, 5-10*b*(3)
equipment requirements, 5-10*b*, B-2
ground evacuation, 5-10*e*(1)
hoist operations, 5-10*b*(2)
medical threat, B-2
mountain techniques, 5-10*f*(1), B-2
nonmateriel requirements, 5-10*b*
scenario, 5-10*g*
terrain, 5-10, B-2
training, 5-10*f*
use of smoke, F-5
Military Sealift Command. *See* United States Navy.
minefield operations. *See also* combat lifesaver; engineers; first aid; litter.
evacuation drills, 8-9, 8-10*a*
extraction of casualties, 5-13
medical supplies, 5-13
minefield survival rules, 5-13, 8-9, 8-10
threat, G-5*e*(4)
mission oriented protective posture
equipment, 6-11*f*, L-7*e*
gear, 5-6*c*(1)
protective mask, 8-9*a*, N-1
mobile aeromedical staging facility. *See* United States Air Force.
morphine administration, C-2*a*
mortuary affairs (graves registration), 3-3*c*, 3-11*c*, 4-11*a*, C-3*b*, G-5*c*(4)
mountain operations. *See also* air ambulance; hoist rescue operations; landing zones; winds.
ambient light, E-17*b*
ambulatory patients, 5-2*d*(2)(*h*), 5-2*f*
characteristics, 5-2*a*—*b*
environmental impact, 5-2*b* and *e*, B-2
equipment, 5-2*h*, 5-4*b*(2)
horizontal hauling line, 9-13
icing, 5-2*d*(2)(*c*)
illness, 5-2*e*
litter/ambulatory patients, 5-2*d*(2)(*h*), 5-2*f*, 5-3*e*, 9-8, 9-13, B-2

mountain operations (*continued*)
litter evacuation, 5-2*d*(2)(*f*), 5-3*e*, 9-8, 9-9—12, B-2, L-7*h*
medical supplies, 5-2*h*
patient estimates, 5-2*g*
references, 5-2*j*, E-15*d*
road network, 5-2*c*
shelters, 5-2*i*, B-2
special equipment, B-2
techniques in military operations on urbanized terrain 5-10*f*, B-2
warming stations, 9-10*d*, B-2, L-7*h*
movement control agency, 6-3*l*
movement control center, 3-4*d*, 6-3*k*
multinational operations
alliances, M-2*a*, M-3*a*
coalitions, M-2*b*, M-3*b*
combat health support considerations, M-6
command and control, M-4*c*
eligible beneficiaries, M-5*a*, B-2
funding/reimbursement, 4-7*b*(6), M-5*b*
general, M-1
language requirements, M-5*c*
rationalization, standardization, and interoperability, M-4
tactical standing operating procedure, G-4
unified action operations, 4-7*b*(6)

navigation. *See also* training.
aide/evacuation noncommissioned officer, 2-2*d*(1)
aids, 2-2*e*, 4-3*c*(1), 5-4*c*(2), 5-7*a*(3), E-17*a*
blowing sand and dust, 5-4*c*(7)
compass, 5-4*b*(2)
convoys, 5-3*c*—d, 5-4*b*(2)
dead reckoning, 5-4*c*(2)(*c*), 5-7*a*(3), E-17*a*
desert operations, 5-4*a*—*b*
extreme cold weather operations, 5-5*e,* E-17*a*
ground ambulance, 5-2, 5-4*b*(2), 10-4
jungle operations, 5-3*f*(4)
land, 5-3*f*(4), 10-4
medical aidman, 10-4
military operations on urbanized terrain, 5-10*e*(1)
mountain operations, 5-2*d*(2)
obstacles, 5-2*d*(2)(*d*), 5-10*e*(1), B-2
over-water, 5-7*a*(3)
visibility, 5-2*d*(2)(*d*), 5-4*c*(2)
night vision goggles, 5-4*c*(2), 5-5*e*, E-10*b*, E-17*b*, N-3a
noncombatant evacuation operations. *See* stability operations.

Nongovernmental organizations, B-2, B-4
nonmedical transportation assets
accompanying casualty, 1-4*b*(2)
aircraft, 1-4*b*, 4-2*d*, 4-12*g*, B-2
amphibious cargo vessel, 10-11*b*
Army fixed-wing aircraft, 10-30—31
augmentation of medical personnel, 1-4*b*(2), 4-2*d*, 4-3*d*(4), 4-7*b*(2), 10-12, G-5*j*
backhaul, 6-12*b*
barges, 10-12*b*
beasts of burden, 5-2*c*
buses, 10-12*b*
C-12, Huron, 10-31*b*
CH-47 (Chinook) helicopter, 10-33—34
casualty evacuation, 1-4*b*
civilian cargo vehicles, 10-12*b*
coordination for, 10-12, G-5*j*
covering force, 4-7*b*(2)
general, 10-11, 10-29
ground assets, 4-2*d*
host-nation support, 10-12*b*
key personnel, 10-12
loading and unloading, 10-13—20
M2/3, Bradley infantry fighting vehicle, 4-3*c*(8)
M113, carrier, personnel, armored, 10-12*a*
M871, semitrailer, 10-17
M977, truck, tactical, heavy expanded mobility (HEMTT), 10-16
M998, vehicle, wheeled, high mobility multipurpose, 10-13—14
M1081, truck, cargo, medium tactical vehicle, light vehicle air drop/air delivery, 2 1/2 ton, 10-20
M1085, truck, cargo, medium tactical vehicle, long-wheel base, 5 ton, 10-18
M1093, truck, cargo, medium tactical vehicle, light vehicle air drop/air delivery, 5 ton, 10-19
management of assets, 10-12*d*
mass casualty, 1-4*b*(2), 4-2*d*, 10-12, B-2
pack animals, 5-2*c*, 9-7*e—f,* 9-8, B-2, L-7*h*
patient
accessibility, 1-4*b*(2)
precedence, 10-12*d*
planning for, 4-12*g*
prioritizing, 1-4*b*(2)
railway cars, 10-12*b*, Q-4
retrograde operations, 4-6*b*(2)
security operations, 4-7*b*(2)
tractor, 5 ton, with stake and platform trailer, 10-12*a*
transportation assets, 4-3*c*(4)
transported versus evacuated, 1-4*b*(2), 10-12*b*
travois, 9-7

nonmedical transportation assets (*continued*)
truck, cargo,
2½ ton, 10-15
5 ton, 10-15
U-21, Ute, 10-31*a*
United States
Air Force, 10-35, 10-36
Navy, 5-7
vehicles, B-2
watercraft, B-2
nuclear, biological, and chemical environment. *See also* mass casualty situation; mission oriented protective posture.
activity, G-5*d*(1)
biological warfare agent, 1-3*a*, 6-10, O-4*b*
chemical warfare agent, 1-3*a*, 6-10, O-4*b*
contaminated patients, 5-6*d*(3)
contamination avoidance, G-5*f*(2)
contamination of assets, 5-6
continuous operations, 5-6*a*
cross-FLOT operations, 5-11*c*
decontamination, 5-6*d*, 5-11*c*, 6-10, G-5*f*(2)
defensive measures, 3-8*b*
detection, 2-2*d*(1)
dressed litter, 9-3
gas particulate filter (GPFU), 10-6, 10-7
ground versus air assets, 5-6*c*(2)
impermeable cover, 9-3
integrated warfare operations, 4-7*b*(7)
M996/M997, truck ambulance, 10-6
M1010, truck ambulance, 10-7
managing evacuation assets, 5-6*a*
mission oriented protective posture. *See* mission oriented protection posture.
noncommissioned officer, 3-8*b*, 5-6*c*(2)
operational exposure guide, 5-6*c*(2), G-5*f*(2)
patient decontamination station, 5-6*d*(4)—(5)
toxic industrial materiel/chemicals, 1-3*a*
uncontaminated resources, 5-6*d*
unit function, 3-12*a*
weaponry, 1-2*c* and *e*, 1-3*a*, 1-6*a*, 4-6*b*(1)

obscurants. *See* smoke.
operation order, 7-2, G-2, G-4*a*(3), L-4*b*(4)
operational exposure guidance. *See* nuclear, biological, and chemical environment.
operational tempo, L-7*a*
originating medical facility. *See* medical regulating.

patient
acquisition (collection)
adverse terrain, 4-8*b*(3)
ambulance teams, 2-2*c*, 4-5*a*, 5-10*e*(1)
area support, 4-3*b*(2)
defensive operations, 4-6*b*
Echelon I, 1-10*a*
find (locate), 4-3*c*(5), 5-10*b*(3)
general, 4-1
hostile fire, 4-8*b*(3)
military operations in urbanized terrain, 5-10*e* and *g*
minefield operations, 8-10
offensive operations, 4-6*a*(6)
organic assets, 4-3*b*(1)
patient collecting points, 4-5*a*
penetration, 4-7*a*(1)
primary responsibilities, 4-3*b*
requirements, N-3*a*
classification codes, App K
collecting point. *See also* battalion aid station; combat lifesaver; combat medic; patient acquisition (collection)
coordination, 5-2*c*(3)
covering force, 4-7*b*(2)
cross-FLOT, 5-11*a* and *c*
designation, 2-3*c*(1), 4-5*a*—*b*, B-2
directing to, 5-10*g*(5)
evacuation from, 4-3*c*(6)
evacuation to, 2-2*e*, 4-5*a*, 4-7*a*(3)
extreme cold weather operations, 5-5*e*
location, 4-7*b*(1), 5-11*c*
military operations on urbanized terrain, 5-10*e*—*f*
mountain operations, 5-2*c*(4)
overlays, 4-3*c*(1)
passage of lines, 4-7*b*(1)
patient disposition, 4-5*a*
positioning of ambulances, 4-5*b*
predesignated (preplanned), 4-3*c*(6), 4-5*a*, 4-7*b*(3), 5-10*g*(2), 5-11*a* and *c*, B-2
staffing, 4-5*a*
estimates
cross-FLOT operations, 5-11*c*
medical evacuation estimate, B-2
medical regulating, 6-4*c*
mountain operations, 5-2*g*
rotating use, 4-3*c*(6)

patient (*continued*)
evacuation documentation. *See also* United States Field Medical Card (DD Form 1380)
Baggage Tag (DD Form 600), 6-9*c*, 6-11*a*, H-1—4
dental records, 6-11*b*
Evacuation Manifest (DD Form 601), 6-9*c*, 6-11*a*, H-5—7
Evacuation Tag (DD Form 602), 6-11*a*, H-8—11
medical records, 6-11*b*
movement items. *See* United States Air Force.
patient's medical condition, 1-4*a*(2), 1-5, 1-10*b*, 1-11*b,* 4-1*d*, 4-2*c*, 4-3, 5-3d, 5-6*a*, 5-9b, 6-2b, 6-3*g*, 6-11*g*, 7-3, 9-1, 10-12*d*, 10-27*b*(2), 10-39*a*, K-2*c*(1)
personnel
locator system. *See* hoist rescue operations.
replacement, 1-6*d*
planning. *See also* ambulance exchange point; patient collecting point; patient's medical condition; smoke.
ambulance route factors, 4-5*a*
anticipated patient workload, 4-3*a*
antiterrorism assessment, O-4
area support, 2-1*c*
areas of patient density, 4-3*a*, 4-6*a*(3), 5-11*b*, B-2, N-2*a*
Army special operations forces, 5-9*b*
augmentation medical personnel, 10-12c
availability of resources, 4-3*a*
combat health support, 1-9, 1-11, 4-3*c*(1), (6), and (9), 5-2*c*, B-1*a*, B-3
combat health support annex, 4-5*b*(1), 4-6*b*, 4-12
combat health support (medical) planner, 1-3*b*, 1-5*d*(2), 1-9, 1-11*a,* 1-12*b,* 4-1*d*(2), 4-3*c*(9), 4-5, 4-6*a*, 4-7*b*, 5-2*c*, 5-3*d*, 5-4*c*(7), 5-9*b*, 5-10, F-1*b*
conformity, 1-11*a*
considerations, 5-3*f*
coordination, 2-1*b*, 4-3*c*(3), 4-5, 10-12*c*, B-2
cross-FLOT operations, 5-11
desert operations, 5-4*a*—*b*
division medical operations center, 4-2*d*
duration of the operation, 1-6*a*, 4-1*f*, 5-6*a*, 5-11*b*—*c*
estimate, 1-3*b*, B-1, B-2, B-4
extreme cold weather operations, 5-5*f*
flexibility, 1-11*e*, 5-1, 5-2*c*, 5-6*b*, 5-10*b*
flight, E-15
high capacity air ambulance, B-2
hoist rescue operations, E-14
jungle operations, 5-3*f*
medical evacuation
annex, B-1, B-3, B-4
battalion, 3-3*b*, 3-4*a*
estimate, B-1, B-2
plan, B-1, B-2, B-3
planner, B-2

planning (*continued*)
medical intelligence, 1-3*b,* 5-4*a*(1)
medical platoon leader, 4-3*c*(1)
military operations on urbanized terrain, 5-10
mission, enemy, terrain, troops, and time available and civilian considerations, 1-11*d*, 4-1*d*(2), 4-3*a*, 4-6*b*(2), 5-11*b*, O-4
mountain operations, 5-2*c*
negative factors, B-2
offensive operations, 4-3*c*(6)
off-road travel, 5-2*c*(2)
operational, 1-11*a*, 5-10*c* 10-12, G-2
performance, E-14
proactive, 1-9*c*
process, 1-9*a*
rear area protection plan, B-2
rehearsal, 5-6*a*, N-3*a*
requirements, 4-3*c*(9)
specific environments, 5-1
tactical
commander's plan, 1-9*a*, 1-11*a*, 4-3*a*, 4-6*a*(7)(*a*), 5-2*c*, 5-9*b*, F-1*b*, F-2*b*, F-5
situation, 1-9*c*
theater evacuation policy, 1-5*d*(2)
tools, 4-5
unit evacuation plan, 7-2
use of smoke, F-1*b*
preventive medicine
acclimation, B-2
animal and arthropod hazard, G-5*h*
chemoprophylaxis, B-2
cold
injury prevention, 5-2*d*(2)(*i*), 5-5*d*
weather injuries, 5-2*d*(2)(*i*), 5-4*a*(2)
disease vectors, B-2
Echelon II, 1-10*b*
endemic and epidemic diseases, B-2
field hygiene and sanitation, 5-3*f*(3)—(4), 5-4*a*(2), G-5*g*(6)
food service sanitation, 5-3*f*(3)
functional area, 1-9*b*
heat injury, 5-3*f*(3)
immunizations, B-2
individual preventive medicine measures, B-2
jungle operations, 5-3*f*(3)
multinational operations, M-6*b*(4)
personal protective measures, 5-3*f*(3), G-5*h*
programs, 1-10*b*, 5-4*a*(2)

preventive medicine (*continued*)
refugees, O-4*f*
work/rest schedules, B-2, N-3*a*
Prisoner of War Information Center, 4-10*d*
private volunteer organizations, B-2, B-4
property exchange
allied nations, 4-4*c*
Army, 4-4, 10-3, 10-12
coalition, 4-4*d*
ground ambulances, 10-3
international standardization agreement, 4-4*b*
United States Air Force, 4-4*b,* 6-10

Quartermaster, 4-11

refugees, 4-6*b*(2), 4-9*b*, 5-10e(1), B-2, O-4*f*
remains, disposition of, 4-11, G-5*c*(4)
return to duty
aeromedical evacuation, 10-22*a*
Army Medical Department Battlefield Rules, 1-12
availability of replacement personnel, 1-6*d*, 1-7*a*
combat health support capabilities, 1-10*c*
delay in, 4-2*e*
echelons of care, 1-10
focus of combat health support, 4-3*c*
general, 1-1
main support medical company, 4-3*e*(2)
mission, 1-7*b,* 4-3*f*(1)
overevacuation, 4-2*e,* 10-12*d*
patient's health record, C-2*c*
policy, 1-5*a,* 1-11*b*
principles, 1-1, 1-11*e*
rate, 1-6*b*
reduces loss of trained manpower, 1-7*b*
resource management, 1-1
system, 4-3*f*
tactical commander, 1-1
theater evacuation policy, 1-*6c*, 1-8
within echelons above corps, 6-12*d*
risk management
acceptable level of risk, 5-6*a*, 5-11*b*
accidental risk, L-2*b*
assessment, 4-5*a*, 5-6*a*, B-2, G-5*h*, L-6
definition, L-1*a*
factors, L-7

risk management (*continued*)
hazards, L-3
levels of risk, L-6*b*
matrix, L-6*a*
principles, L-5
steps, L-4
tactical risk, L-2*a*
work sheet, L-1*b*
rules of engagement, O-4*d*

smoke
advantages, B-2, F-2*b*
aeromedical evacuation operations, F-4
camouflage, 5-4*c*(1) and (4), 10-1*c*, A-2*b*, F-2*b*, F-3*b*
combat multiplier, F-1*b*
combat operations, F-3*c*
coordination for, 5-4*c*(4)
desert operations, 5-4*c*(1) and (4)
disadvantages, F-1*b*, F-4*b*
employment considerations, F-1*b*
general, F-1
Geneva Conventions, F-3
ground operations, F-5
hazard, 5-4*c*(4)
hoist rescue operations, E-2*c*, E-6*a*, E-8, E-9, F-4
identification, 10-25*d*(2), F-1*c*, F-2*a*, F-4*a*(1)
in medical evacuation, F-1*a*
in military operations on urbanized terrain, 5-10*f*(2)(*b*), 5-10*g*, F-5
inversion, 5-4*c*(4), F-4*a*(4)
marking landing zone, 5-4*c*(1), 10-25*d*(2), B-2, F-1*c*, F-4*a*(2)
obscuration, 5-4*c*(4), F-1*b*, F-2*b*, F-3*c*
operational concept, F-2
planning, B-2, F-1*b*
position marking, B-2, E-6*a*
reduced visibility, 5-4*c*(4)
resupply operations, F-2*b*
tactical commander, F-1*b*, F-2*b*
water recovery operations, E-8*a*—*b*, E-10*a*, F-4*c*
wind direction. *See* winds.
special operations forces. *See also* combat lifesaver.
Army special operations forces planner, 5-9*b*
conventional assets, 5-9*b*—*c*
exception to theater evacuation policy, 1-5*c*
independent care practitioner, 5-9*a*
indigenous forces, 5-9*a*

special operations forces (*continued*)
medic, 5-9*a*
medical evacuation, 5-9, 6-12
special operations
aviation, 6-12*b*
command, 6-12*b*
spine boards, 9-6, E-26, E-30*a*
stability
and support operations. *See also* stability operations; support operations.
anticipated duration, 4-1*f*, 4-8*b*(1)
estimate, B-2
minefield operations, 5-13
mission, 4-1*f*
potential for violence, 4-1*f*, 4-8*b*(1)
operations
coercive actions, 4-8*a*(1)
combating terrorism, 4-8, App O
considerations, 4-1*f*
definition, 4-8*a*(1)
developmental actions, 4-8*a*(1)
imperatives, 4-8*a*(2)
medical evacuation support, 4-8*b*
nation assistance operations, 4-8*a*
noncombatant evacuation operations, 4-8*a*
support to counterinsurgencies, 4-8*b*(4)
support to insurgencies, 4-8*b*(4)
types of activities, 4-8*a*(1)
standing operating procedures. *See* tactical standing operating procedures.
static electricity, 5-4*a*(3), 5-5*f*, E-8*c*, E-9*b*, E-17*a*, E-25, E-36*b*
support operations
civilian authorities, 4-9*a*
community assistance, 4-9*c*
considerations, 4-1*f*
domestic support, 4-9*b*
definition, 4-9
disaster relief, 4-9*b*, B-2, G-5*i*
enemy prisoners of war, 4-10
environmental assistance, 4-9*a*
humanitarian assistance, 4-9*a*—*b*, G-5*i*
support imperatives, 4-9*a*
tactical standing operating procedures. *See also* multinational operations.
administration and personnel annex, G-5*c*
contaminated environment, 5-6*a*
contents, 4-3*b*(2)
decontamination, 5-6*e*

tactical standing operating procedures (*continued*)
enabling operations, 4-7*b*(1)
format, G-3*a*—*b*
general, A-6*b,* G-1,
Geneva Conventions, 5-10*g*(6), A-6*b*
medical
evacuation
battalion, App G
support, 4-3*b*(2)
regulating, 6-4*b*(1)
minefield operations, 8-10*c*
pagination, G-3*c*
purpose, G-2
reference to standing operating procedures, 5-6*e*, 7-2, 7-8*b*, 8-10*c*, E-4*a*, E-6*b*, E-18*a*, G-2, G-5*b*(2)
review and update, G-2
risk management, L-4
scope, G-4*a*(1)
subdivisions, G-3*a*, G-4, G-5
US Field Medical Card (DD Form 1380), C-4*a*
tag line. *See* hoist rescue operations.
task organization. *See* medical evacuation; medical evacuation battalion.
temporary morgue, 4-11
Theater
Aeromedical Evacuation System. *See* United States Air Force.
evacuation policy
adjustments to, 1-5*b*, 1-8
combat health support planner, 1-5*d*
continuity, 1-11*b*
definition, 1-5*a*, 1-10*c*
dentist, 1-5*d*
determining factors, 1-6
exception, 1-5*c*, 6-12*d*
impact of, 1-6*e*, 1-7*a*
intratheater, 1-8
longer, 1-7*b*
physician's role, 1-5*d*
reduction (decrease), 1-5*b*, 1-7*a*
return to duty, 1-1*b*, 1-5*a*, 1-10*d,* 4-3*f*(1)
selection of patients, 1-5*c*
special operations forces, 1-5*c*
stability operations, 4-8*b*(1)
Patient Movement Requirements Center. *See also* medical regulating, threat.
desert operations, 5-4*c*(2) and (4)
extreme cold weather operations, 5-5*d*
forces, 4-1*e*

Theater
Patient Movement Requirements Center (*continued*)
general, 1-1
jungle, 5-3*c*—*d*
military operations on urbanized terrain, 5-10*a* and *f*
mountain operations, 5-4*b*(2)
nuclear, biological, and chemical environment, 5-6*a*—*b*
special operations forces, 5-9*a*
threat. *See also* medical threat.
evaluation of, G-5*e*(2)
general, 1-2
hostile intelligence, G-5*e*(2)
jungle operations, 5-3*d*
levels, G-5*e*
minefields, 8-9*a*(6), 8-10*b*, G-5*e*(4)
security, 5-3*d*
terrorist, B-2, G-5*e*(3), O-1*b*
to medical evacuation assets, 1-2, 1-5*b*, 4-5*b*, 5-10*g*(6), B-2
unexploded ordnance, 8-10*a*—*b*
toxic industrial chemicals, 1-3*a*
training
combat, B-2
health support, B-2
lifesaver skills, 1-10*a*(1)(*b*), 8-10*e*
crew, 5-2*d*(2)(*i*)
deck-landing qualification, 5-7*a*, B-2
desert operations, 5-4*b*(2)
exercise, C-4*c*
hoist rescue operations, E-7, E-13
host nation, 4-8*b*(4), G-5*i*
jungle operations, 5-3*f*(4)
lessons learned, 4-1*a*
litter evacuation, 5-10*f*(2), J-1—2, J-4, B-2
medical evacuation battalion, 3-3*b*, 3-4*b*
military operations on urbanized terrain, 5-10*a* and *f*
minefield operations, 8-10*e*
mountain operations, 5-2*b* and *d*, 5-4*b*(2), 5-10*f*(1), 9-9, E-15
naval operations, 5-7*a*(1)
navigation, 5-4*b*(2)
nuclear, biological, and chemical, 3-4*b*, 3-8*b*, 5-6*g*
self-aid/buddy aid, 1-10*a*(1)
soldier skills, 3-4*b*
terrorist threat and countermeasures, O-1*b*
to overcome deficiencies, 5-6*f*

training (*continued*)
water
egress, 5-7*a*(1)
survival, 5-7*a*(1)
treatment squad. *See also* battalion aid station.
ambulance platoon support, 2-3*c*(1)
echelon of care, 1-10*a*(2)

UH-1V (Iroquois) helicopter
capabilities, 3-11*b*, 10-24*b*
configuration 10-24*b*, 10-28*a*
description, 10-24
forest penetrator, E-24
hoist controls, E-6*b*
interior, 10-28*a*
jungle operations, 5-3*f*(7)
loading and unloading, 10-28*b*—*d*
UH-60A (Blackhawk) helicopter
auxiliary fuel tanks, E-14*b*(2)
capabilities, 3-11*b*, 10-24*a*, 10-27
configuration, 10-24*a*, 10-27*a*
description, 10-24*a*
forest penetrator, E-24
guides for loading, 10-27*b*
hoist, E-1
installing litter pan supports, 10-27*c*
jungle operations, 5-3*f*(7)
litter support unit, 10-27*a*
loading and unloading, 10-27*a*—*f*
medical evacuation kit, 10-27*a*
United States
Air Force. *See also* medical regulating.
aeromedical
evacuation
control center, 6-3*h*—*i*, 6-6*e*, 6-10*d*, 10-36*g*
liaison team, 6-3*h*, 6-4*a*, 6-6, 6-9, 6-10*d*, 6-8*c*, 6-12*c,* 10-36*g*
operations team, 6-3*h*—*i,* 10-36*g*
staging
facility, 3-7*b*, 4-4*b*, 6-3*j*, 6-8*c*, 10-36, H-10
squadron, 6-3*k*, 6-8*c,* 10-36*g*
Air
Mobility Command, 6-3*n*
operations center, 6-3*i*
airborne operations, 5-8*b*, 6-9*b*
Automated Patient Evacuation System, 6-3*q*

United States
Air Force (*continued*)
backhaul, 6-10*e*, 10-36*c*
Boeing-767 (B-767), 10-37
C-5, Galaxy, 10-36*d*
C-9A, Nightingale, 10-36*b*
C-17A, 10-36*e*
C-130, Hercules Transport, 10-36*a*
C-141, Starlighter, 10-36*c*
capabilities (capacities), 10-36, Q-2
civil reserve air fleet, 10-37
communications, 6-6*d*
coordination of aeromedical evacuation, 6-3*i*
critical care air transport team, 6-3*h*, 6-9c, 10-36*e,* K-3*c*
Defense Medical Regulating Information System, 6-3*p*
developing load plan, 10-39
Director of Aeromedical Evacuation Forces, 6-9*c*
elements, 10-36*g*
evacuation precedence and codes, K-5—7
general, 10-35
high capacity air ambulance, 6-4*a*, B-2, G-5*k,* H-2, H-6
impact of, 1-7
in-flight patient care, 6-9*c*
intertheater transfer, 1-5*d*(4), 1-7*a*, 6-3*c*
intratheater transfer, 1-5*d*(4), 6-3*b*
loading plan, 10-39
mobile aeromedical staging facility, 3-7*b*, 3-8*d*, 4-3*f*(3), 4-4*b*, 6-3*h* and *j*, 6-6*i*, 6-9—12, 10-36*g*, B-2, H-2, H-6
pararescuemen (PJs), 6-12*b*
patient movement items, 4-4*b*
planning, 1-5*d*(4)
preparing aircraft, 10-38
primary means, 6-6*d*
required medications, 6-9*d*, 6-11*d*
resources, 1-7*a*
responsibilities, 6-8*c*
Scott Air Force Base, 6-3*i*
special operations aviation, 6-12*b*
strengths to be supported, B-2
tanker airlift control center, 6-3*i*, 6-8*b*
Theater Aeromedical Evacuation System, 6-3*h*, 6-6, 6-8—12
Field Medical Card (DD Form 1380). *See also* battalion aid station; combat medic; tactical standing operating procedure.
abbreviations used, C-3*d*

United States
Field Medical Card (DD Form 1380) (*continued*)
accompany patient, C-2, C-3*b*
attaching to casualty, C-1, C-3*b*
carded for record only, C-3*b* and *e*
disposition, C-4
field medical record jacket (DA Form 4006), C-5
general, C-1
grade structure, C-3*g*
initiate (prepare), 2-2*c*, 4-3*c*(5), C-3
instructions for completing, C-3*f*—*g*
missing, H-9
morphine administration, C-2*a*
mortuary affairs, C-3*b*
outpatient treatment record, C-2
patients health record, C-2
reassessment, C-3*f*
recording treatment provided, C-2
review information, 10-4
use, C-2
Marine Corps, 5-7*d*, B-2
Navy. *See also* medical regulating.
airspace management system, 5-7*a*(2)
amphibious
assault ships
"IWO JIMA" class, 5-7*b*(3)
"TARAWA" class, 5-7*b*(2)
"WASP" class, 5-7*b*(1)
transport dock, (LPD)(LPH), 5-7*b*(4)—(5)
capabilities, 5-7*b*, Q-5
communications, 5-7*a*
coordination, 5-7*a*, 6-3*l*
deck-landing qualifications, 5-7*a*, B-2
hospital ships, 5-7*c*, 6-5*d*
Military Sealift Command, 5-7*c*, 6-3*l*, 6-8*d*
seaports, 6-8*d*
Service Component Command, 6-8*d*
ship-to-shore evacuation, 5-7*d*, B-2
strengths to be supported, B-2
tank landing ship (LST), 5-7*b*(6)
troop transport (AP), 5-7*b*(7)
Transportation Command, 6-3*g*

veterinary support
Geneva Conventions, A-2

veterinary support (*continued*)
functional area, 1-9*b*
multinational operations, M-6*b*(7)
Vietnam, 4-3*e*(1)

water. *See also* hoist rescue operations; planning.
conservation, 5-5*d*
contaminated, 5-3*f*, 5-4*a*(2)
dehydration, 5-2*e*, 5-3*f*(3)
desert operations, 5-4*a*—*b*
drinking water, 5-4*a*(2)
extreme cold weather operations, 5-5*d*
jungle operations, 5-3*f*
night operations, E-10*a*
overwater operations, 5-4*c*(2)
requirements, N-3*a*
weapons
of mass destruction, 1-6*a*, 4-6*a*(5), M-5*f*, O-4*d*
store, N-1
weather, 4-3*a*, 5-2*b*, B-2, N-1, L-7*h*—*i*
winds
desert operations, 5-4*a* and *c*
direction, 5-4*c*(7), E-6*a*, E-8*a*(1)—(2), E-9*a*, E-10*a*(2), E-14*b*(1), F-1*c*, F-4*a*(3)
effect on contaminants, 5-6*d*(4)—(5)
extreme cold weather operations, 5-5*a*—*b*
hoist rescue operations, E-6, E-8*a*(2), E-14*b*(1), F-4c
landing zone, 5-4*c*(7)
mountain operations, 5-2*d*(2)(*b*), E-15*b*
prevailing, 10-25*b*
velocity, E-9*a*

FM 8-10-6
14 APRIL 2000

By Order of the Secretary of the Army:

ERIC K. SHINSEKI
General, United States Army
Chief of Staff

Official:

JOEL B. HUDSON
Administrative Assistant to the
Secretary of the Army
0005503

DISTRIBUTION:

Active Army, Army National Guard, and U.S. Army Reserve: To be distributed in accordance with the initial distribution number 115041, requirements for FM 8-10-6.