FM 8-10-5

BRIGADE AND DIVISION SURGEONS' HANDBOOK

TACTICS, TECHNIQUES, AND PROCEDURES

HEADQUARTERS, DEPARTMENT OF THE ARMY

DISTRIBUTION RESTRICTION: Approved for public release; distribution is unlimited.

FIELD MANUAL
NO. 8-10-5

FM 8-10-5
HEADQUARTERS
DEPARTMENT OF THE ARMY
Washington, DC, 10 June 1991

BRIGADE AND DIVISION SURGEONS' HANDBOOK

TACTICS, TECHNIQUES, AND PROCEDURES

TABLE OF CONTENTS

			Page
PREFACE			iv
CHAPTER	1.	THE HEALTH SERVICE SUPPORT SYSTEM	1-1
		1-1. Health Service Support	1-1
		1-2. Basic Doctrine of Health Service Support	1-1
		1-3. Principles of Health Service Support Operations	1-1
		1-4. Health Service Support System Design	1-2
		1-5. Echelons of Health Service Support	1-2
		1-6. Health Service Support Challenge	1-4
		1-7. Modular Support System	1-5
		1-8. Health Service Logistics in the Combat Zone	1-6
CHAPTER	2.	THE DIVISION	2-1
		2-1. Typical Division	2-1
		2-2. Division Headquarters	2-4
		2-3. Major Commands in the Division	2-4
CHAPTER	3.	MEDICAL UNITS AND ELEMENTS OPERATING IN THE DIVISION AREA	3-1
Section	I.	Medical Battalion	3-1
		3-1. Division Support Command Medical Battalion	3-1
		3-2. Headquarters and Company A Medical Battalion	3-2
		3-3. Forward Support Medical Company	3-2
Section	II.	Division Medical Elements Under the Main/Forward Support Battalion Design	3-4
		3-4. Division Medical Operations Center	3-4
		3-5. Medical Company, Main Support Battalion (Heavy and Light Divisions)	3-5
		3-6. Medical Company, Forward Support Battalion (Heavy and Light Divisions)	3-8
Section	III.	Organic Medical Elements in Combat and Combat Support Units	3-9
		3-7. Medical Platoons and Sections	3-9
		3-8. Organization and Capabilities of the Typical Medical Platoon	3-9

DISTRIBUTION RESTRICTION: Approved for public release; distribution is unlimited.

			Page
CHAPTER	4.	COMMAND AND STAFF RESPONSIBILITIES OF THE BRIGADE SURGEON	4-1
Section	I.	Forward Support Medical Company Commander's Responsibilities and Duties	4-1
	4-1.	Commander's Responsibilities	4-1
	4-2.	Unit Readiness	4-1
	4-3.	Training	4-1
	4-4.	Maintenance	4-4
	4-5.	Unit Supply Operations	4-5
	4-6.	Personnel and Administration Functions	4-6
	4-7.	Graves Registration Responsibilities	4-7
Section	II.	Brigade Surgeon's Responsibilities, Staff Activities, and Relationships	4-7
	4-8.	Brigade Surgeon's Responsibilities	4-7
	4-9.	Maneuver Brigade Staff and Brigade Surgeon	4-8
	4-10.	Brigade Surgeon's (Forward Support Medical Company Commander) Interaction with Medical Battalion Headquarters Staff	4-10
	4-11.	Forward Area Support Coordination Officer	4-11
	4-12.	Forward Support Battalion Staff	4-12
	4-13.	Separate Brigade and Regimental Surgeons	4-13
	4-14.	Division Medical Operations Center	4-14
CHAPTER	5.	COMMAND AND STAFF RESPONSIBILITIES OF THE DIVISION SURGEON	5-1
Section	I.	Command Responsibilities	5-1
	5-1.	Assignments	5-1
	5-2.	Responsibilities	5-1
	5-3.	Staff Supervision	5-1
	5-4.	Division Support Command Staff Interface	5-1
	5-5.	Division Staff Interface	5-2
	5-6.	Corps Medical Staff Interface	5-2
	5-7.	Training Management	5-2
	5-8.	Unit Readiness	5-2
	5-9.	Personnel and Administration Functions	5-3
	5-10.	Battalion Maintenance (Medical and Nonmedical)	5-3
Section	II.	Division Surgeon	5-5
	5-11.	Duties	5-5
	5-12.	Responsibilities	5-5
	5-13.	Interactions with Division Staff	5-6
	5-14.	Interactions with the Division Medical Operations Center	5-7
	5-15.	Interface with Corps Surgeon	5-7
	5-16.	Division Health Service Support Standing Operating Procedures	5-8
	5-17.	Medical Training	5-8
	5-18.	Health Service Support Planning	5-10
	5-19.	Guide for Geneva Conventions Compliance	5-11

Page

APPENDIX A. COMBAT STRESS CONTROL (BRIGADE AND DIVISION SURGEON'S RESPONSIBILITIES) ... A-1
A-1. Army Medical Department Functional Area ... A-1
A-2. Brigade Surgeon's Responsibilities for Combat Stress Control ... A-2
A-3. Division Surgeon's Responsibilities for Combat Stress Control ... A-5
A-4. Medical Force 2000 Combat Stress Control Unit Allocations ... A-7

APPENDIX B. THE COMMANDER'S ROLE IN THE MILITARY JUSTICE SYSTEM ... B-1

Section I. Active Component ... B-1
B-1. Commander ... B-1
B-2. Command Influence ... B-1
B-3. Options Available to the Commander ... B-2

Section II. Reserve Component Jurisdiction ... B-4
B-4. Authority ... B-4
B-5. Involuntary Active Duty and Pretrial Confinement for Reserve Component Soldiers ... B-5
B-6. Extending Reserve Component Soldiers on Active Duty ... B-5
B-7. Preservation of Jurisdiction and Punishment ... B-5
B-8. Nonjudicial Punishment (Article 15) ... B-5
B-9. Summary Court-Martial ... B-6
B-10. Special and General Courts-Martial ... B-6
B-11. Forfeitures ... B-6

APPENDIX C. AVIATION MEDICINE ... C-1
C-1. Purpose ... C-1
C-2. Mission ... C-1
C-3. Duties and Responsibilities ... C-1

APPENDIX D. COMMAND AND STAFF FUNCTIONS AND ESTIMATES ... D-1
D-1. Command and Staff ... D-1
D-2. Staff Functions ... D-1
D-3. Command and Staff Relationships ... D-1
D-4. Administrative Aids ... D-1
D-5. Command and Staff Sequence of Action in Making and Executing Decisions ... D-2
D-6. Estimate of the Situation ... D-5

APPENDIX E. BRIEFINGS ... E-1
E-1. Decision Briefing ... E-1
E-2. Information Briefing ... E-1
E-3. Briefing Checklist ... E-2

APPENDIX F. HEALTH SERVICE ESTIMATE ... F-1
F-1. Mission ... F-1
F-2. Situations and Considerations ... F-1
F-3. Analysis ... F-2
F-4. Comparison ... F-3
F-5. Conclusions ... F-3

	Page
GLOSSARY	Glossary-1
REFERENCES	References-1
INDEX	Index-1

PREFACE

This manual provides information pertaining to the command and staff responsibilities of the brigade and division surgeons assigned to armored, airborne, air assault, infantry, and light infantry divisions that are organized under the L-edition table(s) of organization and equipment (TOE). It provides guidance to the brigade and division surgeons on their duties and responsibilities pertaining to command, staff supervision, and technical control over division and brigade medical elements. It supports the Army Medical Department's (AMEDD) keystone manual, Field Manual (FM) 8-10, Health Service Support in a Theater of Operations, and is based on doctrine found in FMs 8-10-3, 8-10-8, 8-35, 8-55, 100-5, and 100-10.

The proponent of this publication is the Academy of Health Sciences, United States (US) Army. Send comments and recommendations on Department of the Army (DA) Form 2028 directly to **Commandant, Academy of Health Sciences, US Army, ATTN: HSHA-TDL, Fort Sam Houston, Texas 78234-6100.**

Unless this publication states otherwise, masculine nouns and pronouns do not refer exclusively to men.

CHAPTER 1

THE HEALTH SERVICE SUPPORT SYSTEM

1-1. Health Service Support

The health service support (HSS) system represents a continuum of successive echelons (levels) of care beginning at the forward line of own troops (FLOT) and ending at the continental United States (CONUS) base. The effectiveness of the system is measured by its ability to return to duty (RTD) those soldiers who are wounded, sick, or injured. The system is functionally aligned to prevent/minimize noneffectiveness and to collect, assess, evacuate, and rehabilitate the sick and injured; it also provides for the general health maintenance of the soldier.

1-2. Basic Doctrine of Health Service Support

a. The objective of the HSS system is to–

- Reduce the incidence of disease and nonbattle injury (DNBI) and battle fatigue (BF) through sound preventive medicine and combat stress control (CSC) programs.

- Provide care and treatment of acute illness, injury, or wounds.

- Return to duty as many soldiers as possible at each echelon.

b. The major tenets of this doctrine are–

- Emphasis on prevention.

- Far forward medical treatment including advanced trauma management (ATM).

- Patient evacuation that is timely and efficient within the evacuation policy time frame.

- Selectivity of RTD and nonreturn to duty (NRTD) patients at lowest possible level.

- Standardized Echelons (Levels) I and II HSS units under the modular medical support system.

- Standardized air and ground evacuation units integrated under a single manager (the medical battalion [evacuation]).

- Flexible and responsive Echelons (Levels) III and IV systems provided by four modularly designed hospitals and patient holding units (see FM 8-10).

- Enhanced ancillary and functional support systems with advanced technologies.

- A medical system that provides continuous medical management throughout all echelons (levels) of care and evacuation.

1-3. Principles of Health Service Support Operations

a. Conformity. Conformity with the tactical plan is the most fundamental element for effectively providing HSS. Only by participating in the development of the commander's plan of operation can the medical planner ensure adequate HSS at the right time and place. Foremost in all planning is the forward orientation and full use of the HSS system. Additionally, a plan for the rapid reinforcement or replacement of the forward echelon (level) of the medical structure is essential. For additional information, refer to FM 8-55.

b. Continuity. The medical system is a continuum from the FLOT through the CONUS. It serves as a primary source of trained replacements during the early stages of a major conflict. The medical structure is organized into a modular system and procedures are standardized for increased flexibility, rapid reinforcement by like or identical modules, and simplification in tailoring a force for varying situations. The patient evacuation system (integrated ground/air) is an integral part of the HSS system and organized to optimize resource utilization. It is staffed to provide continued care and maintain the physiology of the patient while being transported between medical treatment facilities (MTFs).

c. *Control.* This principle ensures that the scarce HSS resources are efficiently employed to support the tactical plan and that medical units are under the technical control of a single medical manager. Centralized control with decentralized execution permits the medical commander and his staff to rapidly tailor and promptly adjust health service assets. Assets can be realigned in response to major shifts in the location and volume of casualties, changes in supported unit composition and mission, and changes in the intensity of conflict. The modular medical support system provides the flexibility to task-organize for any situation, or replace like units; however, optimum benefits are only derived through centralized control of all medical functions and subsystems.

d. Proximity.

(1) The location of medical assets in support of combat operations is dictated by the—

- Mission, enemy, terrain, troops, and time available (METT-T) factors.
- Requirements for far forward stabilization of patients which help maintain the physiology of the wounded or severely injured soldiers.
- Early identification and forward treatment of RTD category patients.
- Management of mild and moderate BF within soldiers' units, and heavy BF at the closest MTF (see Appendix A).
- Forward orientation of evacuation resources, thereby reducing response time.
- Other logistical units/ complexes.

(2) Medical commanders and staffs, through continuous coordination, ensure that treatment elements/facilities are not placed in areas that interfere with combat operations, or that are subject to direct intervention by enemy forces. Conversely, tactical commanders must realize the fact that fully committed medical resources with a forward orientation will optimize the effectiveness of the HSS system.

e. Flexibility. Standardized-like modules provide medical support from the FLOT to the rear boundary of the theater of operations (TO). The ability to rapidly shift medical resources to areas of greatest need is a cornerstone of the modular medical support system.

f. Mobility. The mobility of medical units organic to maneuver elements should equate to the forces being supported. Major medical headquarters in the TO (medical group, medical brigade, medical command [ME DCOM]) continually assess and forecast echelons of medical units and, through collective utilization of all organic subelement transportation resources, rapidly move units to best support combat operations.

1-4. Health Service Support System Design

The HSS system is designed to acquire, triage, and provide medical care for all personnel operating in the division's sector. Medical support to the division is influenced by many considerations such as—

- Mission, enemy, terrain, troops, and time available.
- The nature of operations, including the intensity of combat.
- The type of threat force to be encountered.
- The geographical area of operations (AO).
- The potential for nuclear, biological, and chemical (NBC) attack and directed-energy devices.
- The climatic conditions, endemic disease health hazards, and current health of the division.
- Air superiority.

1-5. Echelons of Health Service Support

Health service support is arranged in echelons (levels) of care (Figure 1-1). Each echelon of care reflects an increase in medical capabilities while retaining capabilities found in preceding echelons of care. The division contains two echelons of care: unit

level and division level. Echelon I (unit level) HSS (includes ATM, sick call, and evacuation) is provided by the medical platoon/section organic to combat maneuver battalions and some combat support (CS) battalions (see Chapter 3, Section III). It includes first aid in the form of self-aid, buddy aid, and the combat lifesaver. Echelon II (division level) HSS is provided by medical companies of the main support battalions (MSBs) and forward support battalions (FSBs) of the division support command (DISCOM) (see Chapter 3, Section II). This echelon provides an increased medical treatment capability plus emergency and sustaining dental care, x-ray, laboratory, and optometry services, patient holding facilities, preventive medicine, mental health and CSC, and management of Class VIII (medical) supplies, equipment, repair parts, and blood. Nondivisional units operating in the division sector receive medical support on an area basis from the nearest MTF.

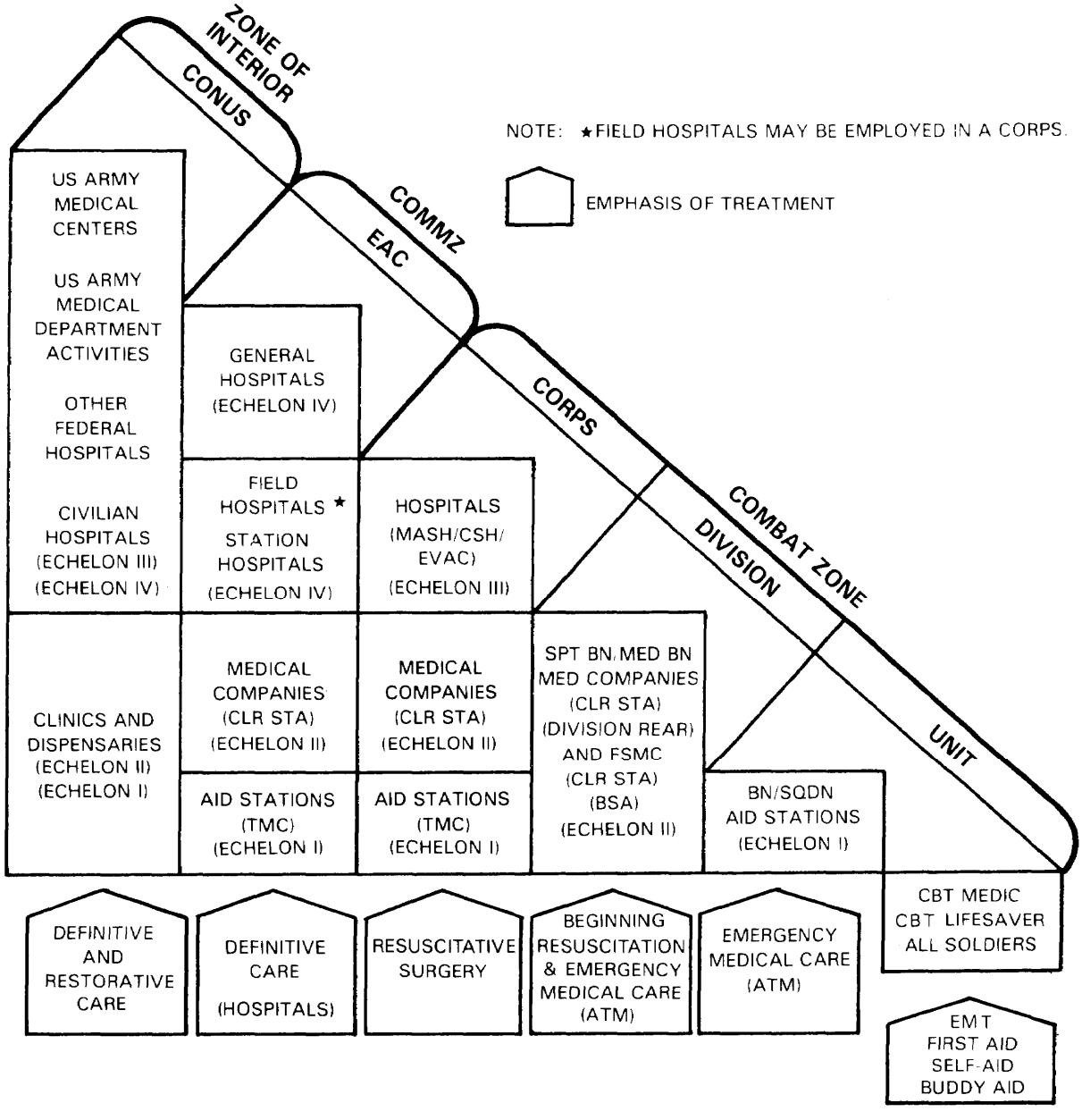

Figure 1-1. Echelons of medical treatment.

1-6. Health Service Support Challenge

The HSS planner must be "proactive" rather than reactive to changing situations. He must shift medical resources as the tactical situation changes. Only in this way can the AMEDD achieve its mission. The challenges for HSS planners at the medical platoon level include—

a. Planning.

(1) *Mission.* Health service support planners must understand the tactical commander's plans, decisions, and intent, Health service support planning is an intense and demanding process. The planner must know—

- What each supported element will do.
- When it will be done.
- Where it will be done.
- How it will be done.

(2) *Requirements.* The HSS planner must plan to meet the requirements of—

- Acquisition and treatment of patients.
- Evacuation.
- Health service logistics.
- Dental services (available at supporting medical company).
- Single-vision lens optometry services (available at supporting MSB medical company or Headquarters and Company A of the medical battalion).
- Veterinary services (corps assets).
- Preventive medicine services (available at supporting MSB medical company or Headquarters and Company A of the medical battalion).
- Mental health, limited neuropsychiatric (NP), and CSC preventive triage and treatment services (available at supporting MSB medical company or Headquarters and Company A of the medical battalion).
- Command, control, and communications.

b. Prevention. The most effective and least expensive method of providing the commander with sustained combat power is prevention. Prevention begins with the individual soldier's awareness of the means to protect himself through health and personal hygiene, stress management, nutrition, physical fitness, and similar measures (soldier health maintenance programs). The best tool available to raise soldiers' awareness of personal protection is an effective field hygiene and sanitation training program. Prevention is enhanced by the application of self-aid and buddy aid training programs, the combat lifesaver, continuous interface with unit- and division-level medics, divisionwide preventive medicine programs, CSC programs, and leadership emphasis at all levels of command. Ultimately, whether it is individual or collective, prevention is the unit commander's responsibility.

c. Far Forward Care. Far forward care is the process of identifying and treating battlefield casualties as close to the forward edge of the battle area (FEBA) or FLOT as the tactical situation permits. This includes first aid, in the form of self-aid/buddy aid and the combat lifesaver, and unit-level HSS. The combat lifesaver, found in each squad, crew, section, or team, is responsible for the application of first-aid measures with a higher degree of skill than self-aid and buddy aid. However, the combat lifesaver's primary role is the performance of his duties as a member of the squad, crew, section, or team, and his first-aid duties are performed as the mission permits. Far forward care is provided to the frontline soldier by the combat medic attached to the maneuver platoon or company. More comprehensive care is provided by a physician-directed treatment squad battalion aid station (BAS) capable of administering initial resuscitation and stabilization (ATM) to battlefield casualties.

d. Medical Evacuation. Medical evacuation starts with the collection of the wounded soldier from the point of injury and continues with his rearward movement through the HSS system. An important element of the evacuation system is the medical care provided en route. Ground ambulances are used in the division area and, where indicated, are assisted by corps air evacuation assets. Normally, ground evacuation will be used for slightly wounded, ill, or injured soldiers who are expected to RTD. Air evacuation is used, when feasible, for seriously wounded, sick, or injured soldiers who are not expected to RTD. In a combat situation, air evacuation assets will fly as far forward as the METT-T permits. The responsibility for medical evacuation rests with the next higher echelon of HSS. For example, the medical platoon is responsible for the evacuation of patients out of the forward maneuver company, battery, or troop area to the BAS. The medical company is responsible for evacuation from the BAS to the division clearing station. Plans for the use of nonmedical vehicles should be established and supplemented when casualties exceed the capability of medical evacuation assets.

1-7. Modular Support System

Health service support to the division is provided by a modular support system (Echelons I and II) that standardizes all medical subunits within the division. The modular design provides duplicate systems at each echelon of care enabling the medical resources manager at the appropriate level to rapidly tailor, augment, or reinforce the battlefield in areas of most critical need. The system is derived by recognizing those common medical functions which are performed across the division and designing like subunits (modules) to accomplish those tasks. The modular medical support system is built around several modules. The modules are oriented to casualty assessment, collection, evacuation, treatment, and initial surgical intervention. When effectively employed, they provide greater flexibility and mobility, and the ability to rapidly tailor the medical force to meet changes in patient work loads and locations.

a. Combat Medic Module. The combat medic module consists of one medical specialist and his basic load of medical supplies and equipment. The combat medic is organic to the medical platoon or section of combat and CS battalions or squadrons and is attached to platoons, companies, batteries, or troops.

b. Ambulance Squad. An ambulance squad is comprised of four medical specialists and two ambulances (two teams). The squad provides evacuation of patients throughout the division and ensures continuity of care en route. Ambulance squads are organic to the medical platoon or section in combat battalions, selected CS battalions, and to medical companies of the MSBs and FSBs. Medical company ambulance squads are positioned to best support the maneuver battalions/surgeons. The medical platoon ambulance squads are likewise positioned to support the companies, batteries, and troops.

c. Treatment Squad. This squad (BAS) consists of the medical platoon leader (field surgeon), a physician assistant (PA), two emergency medical treatment (EMT)-qualified noncommissioned officers (NCOs) and four medical specialists. The squad is trained and equipped to provide ATM to the battlefield casualty; it provides sick call when time permits. To maintain contact with the combat maneuver elements, each squad has two emergency treatment vehicles (such as M577s). Each squad can split into two trauma treatment teams. The treatment squad is organic to medical platoons or sections in maneuver battalions and designated CS units. It is the basic building block in the medical company. The treatment squad (treatment teams) may be employed almost anywhere on the battlefield.

d. Area Support Squad. This squad is comprised of one dentist trained in ATM, a dental specialist, an x-ray specialist, and a medical laboratory specialist. The squad employs lightweight specialized equipment which can be quickly and easily moved. The squad is organic to the medical company.

e. Patient Holding Squad. This squad consists of two practical nurses and two medical specialists. The squad is capable of holding and providing minimal care for up to 40 RTD patients; however, in the light division, this squad can only hold and care for 20 RTD patients. This squad is organic to the medical companies.

NOTE

A treatment squad or team, an area support squad, and a patient holding squad are collocated to form the area support section (division clearing station).

f. Medical Detachment (Surgical) and Surgical Squads. The medical detachment (surgical) is a corps asset. It deploys forward as necessary to support division/task force operations. This detachment must collocate with a patient holding squad for support. Each airborne and air assault division has two surgical squads which are organic to the Headquarters and Company A, medical battalion. Both the medical detachment (surgical) out of the corps and surgical squads organic to divisions have the same basic design. They are organized to provide early resuscitative surgery for seriously wounded or injured casualties, to save lives, and to preserve physical function. Early surgery will be performed whenever a likely delay in the evacuation of a patient threatens life or the quality of recovery. The task force medical detachment (surgical) will normally be employed in the division support area (DSA) but may be employed in the brigade support area (BSA) during brigade task force operations. Normally, it is attached to a treatment platoon and collocated with a division clearing station.

(1) The mission of the medical detachment (surgical) and organic surgical squads is to provide a rapidly deployable initial surgical service to stabilize nontransportable patients forward in the division area of operations.

(2) The capabilities of the medical detachment (surgical) and surgical squads are as follows:

- Provide life- and limb-saving (initial) surgery in the combat zone (CZ).
- Provide initial surgery forward in support of division-level health services for a period up to 48 hours.
- Provide initial surgery for up to 40 critically wounded/injured patients with its organic medical equipment set.
- Provide personnel augmentation to CZ hospital when not task-organized to support division-level health service.
- Provide preoperative and postoperative care to patients with assistance of the patient holding squad when attached to division-level medical units.

(3) Personnel assigned to the medical detachment (surgical) or surgical squads organic to airborne and air assault divisions include—

- General surgeon (one).
- Orthopedic surgeon (one).
- Medical-surgical nurse (one).
- Nurse anesthetist (two).
- Operating room specialist (two).
- Practical nurse (two).

1-8. Health Service Logistics in the Combat Zone

a. *Medical (Class VIII) Resupply.*

(1) Resupply of the combat medic is the responsibility of the BAS. This mission is handled and supervised by medical personnel. The combat medic requests his supplies from the BAS. This action is not a formal request so it can be oral or written. The requests are delivered to the BAS by whatever means available. Usually this will be accomplished by the driver or the medic in the ambulances returning to the BAS with patients. Ambulances will then transport the requested supplies forward from the BAS to the combat medics. This system is referred to as backhaul.

(2) Resupply of forward deployed BASS in a heavy division is the responsibility of the medical company of the FSB. In those divisions not under the MSB/FSB design, resupply of the BAS is the responsibility of the forward support medical company (FSMC) of the medical battalion. Medical supply personnel operate a resupply point for the BAS of the maneuver battalions based on supply

point distribution for normal operations. Backhaul transportation of medical supplies using ambulances returning to forward facilities, both air and ground, is the preferred method of moving medical supplies to the maneuver battalions. If the backhaul method is not used, coordination for forward movement is the responsibility of the medical platoon leader of the maneuver battalion.

(3) Resupply of the medical companies in all divisions is performed by the division medical supply office (DMSO). The DMSO has the responsibility to provide medical supply support to all units within the division area, to include blood (Group O packed red blood cells), to all Echelon II MTFs. In contrast to the formal procedures normally associated with support between the CZ medical supply, optical, and maintenance (MEDSOM)/medical logistics (MEDLOG) battalion and the DMSO, requests submitted to the DMSO by division medical treatment elements are informal. Requests may come by message with returning ambulances (ground or air), by land line, or through existing frequency modulated (FM) administrative logistics or command nets within the division. Requests for medical supplies from BASS and medical companies are filled or forwarded to the supporting CZ MEDSOM/MEDLOG battalion. The line of medical supply flow back to the requesting units will follow the principle of backhaul. Vacant medical evacuation vehicles returning to the forward areas will be tasked with the transport of medical materiel. The DMSO uses supply point distribution at a site that is easily accessible to ground ambulances. This concept must be used to maximize the benefits associated with the backhaul philosophy.

(4) Resupply of the DMSO is provided by the CZ MEDSOM/MEDLOG battalion.

(a) The DMSO, located in the division's medical battalion (divisions not under MSB/FSB design) or the MSB (divisions under MSB/FSB design), is responsible for providing medical supply, blood, and medical maintenance support to the medical treatment element within the division. The DMSO executes health service logistics plans. He exercises his responsibilities by–

- Developing and maintaining prescribed loads of contingency medical supplies and medical repair parts for division medical elements.

- Coordinating with the supported elements to determine requirements for Class VIII materiel.

- Maintaining prescribed loads of contingency medical supplies. These loads should be based upon transportation and storage constraints as well as characteristics of the AOs.

- Managing the division's health service logistics quality control program.

- Supervising the unit-level medical equipment maintenance program.

- Monitoring the division medical assemblage management program.

- Coordinating logistical planning for preconfigured Class VIII packages.

(b) The reconstitution duties of the DMSO include—

- Reconciling by brigade the shortages in each medical company and treatment platoon as reported b y the commander or platoon leader or the battalion headquarters element.

- Coordinating with the medical battalion commander or the MSB commander to obtain the number of modular medical systems required to field an operationally ready treatment facility.

- Coordinating with the CZ MEDSOM/MEDLOG battalion to monitor the status and number of modular systems due in.

- Coordinating with the division movement control center to move supplies from the MEDSOM/MEDLOG battalion. (The DMSO directs quick fixes using available assets and controlled exchanges for medical equipment to maximize the capability of returning trained soldiers to duty.)

- Alerting the appropriate company when modular systems are arriving.

• Allocating modular medical systems to the unit based on the commander's priorities. (The DMSO coordinates through the division medical operations center [DMOC] with the division movement control center to identify transportation assets to transport modular assemblages to the unit being reconstituted.)

• Preparing the critical items listing and consolidating the critical shortages by brigade.

(5) Resupply of the CZ MEDSOM/ MEDLOG battalion is received through the communications zone (COMMZ) MEDSOM/ MEDLOG battalion or by direct shipments from CONUS. The CZ MEDSOM/MEDLOG battalion is normally under the direct command and control (C2) of the CZ medical brigade headquarters. It provides medical supply, medical equipment maintenance, and optical fabrication services for units in the CZ area. The CZ MEDSOM/MEDLOG battalion establishes the Class VIII supply point in the corps area. Shipment of medical supplies and blood forward is coordinated with the corps movement control center or accomplished by backhaul on medical vehicles (air or ground). Emergency resupply can be accomplished by air ambulances in the medical battalion (evacuation).

b. Medical Maintenance. Division medical maintenance services are provided by organic personnel.

• *Operator/user maintenance.* Medical personnel will exercise their responsibilities by–

• Performing operator preventive maintenance checks and services (PMCS) to include—

• Maintaining equipment by performing routine services like cleaning, dusting, washing, and checking for frayed cables and loose hardware.

• Performing equipment operational testing.

• Replacing operator-level spares and repair parts that will not require extensive disassembly of the end item, critical adjustment after replacement, nor the extensive use of tools.

• Coordinating maintenance services beyond their capability with unit maintenance specialist.

(2) *Unit-1evel maintenance.* Divisional biomedical equipment personnel will exercise their responsibilities by—

• Scheduling and performing their PMCS functions; electrical safety inspections and tests; and calibration, verification, and certification services.

• Performing unscheduled maintenance functions with emphasis upon the replacement of assemblies, modules, and printed circuit boards.

• Operating a medical equipment repair parts program to include Class VIII as well as other commodity class parts.

• Maintaining a technical library of operator and maintenance technical manuals (TMs) and/or associated manufacturers' manuals.

• Conducting inspections for new or transferred equipment.

• Maintaining documentation of maintenance functions in accordance with (IAW) the provisions of Technical Bulletin (TB) 38-750-2 or DA standard automated system.

• Collecting and reporting data for readiness reportable medical equipment.

• Notifying the CZ MEDSOM/ MEDLOG battalion of requirements for maintenance support services, reparable exchange, or medical standby equipment program (MEDSTEP) assets.

(3) *Maintenance support services.* Divisional biomedical equipment personnel will provide limited area support to units without organic capability. In addition, these personnel will be deployed forward as necessary to repair critical

medical equipment. Maneuver BASs will turn in medical equipment requiring maintenance services to the FSMC. The FSMC in turn will send this equipment to the DMSO when forward deployment is not feasible.

(4) *Direct support maintenance.* The MEDSOM/MEDLOG battalion of the CZ is responsible for–

- Providing forward maintenance support services with mobile support teams.
- Maintaining reparable exchange and MEDSTEP assets for use by supporting units.
- Providing "repair and return" maintenance services.
- Fabricating minor parts when necessary.

(5) *Medical maintenance flow.* Figure 1-2 depicts the flow of medical maintenance in the TO.

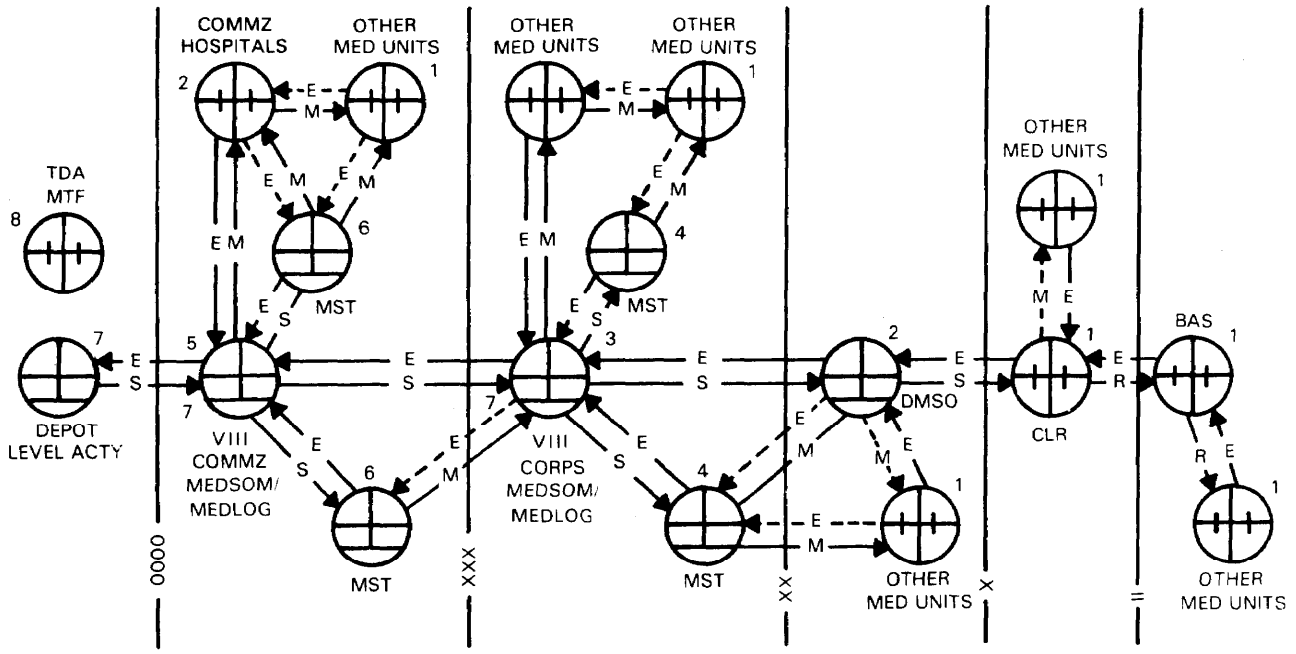

1. NO ORGANIC MEDICAL MAINTENANCE CAPABILITY.
2. ORGANIC UNIT LEVEL MEDICAL MAINTENANCE CAPABILITY.
3. PERFORMS DIRECT AND GENERAL LEVEL SUPPORT MEDICAL MAINTENANCE SERVICES, INCLUDING MEDSTEP PROGRAMS.
4. PERFORMS DIRECT AND GENERAL LEVELS OF MEDICAL MAINTENANCE SERVICES ON-SITE FOR SUPPORTED UNITS.
5. PERFORMS DIRECT AND GENERAL LEVELS OF MEDICAL MAINTENANCE SUPPORT. MEDICAL MAINTENANCE SERVICES INCLUDING MEDSTEP PROGRAMS.
6. PERFORMS UNIT, DIRECT, AND GENERAL LEVELS OF MEDICAL MAINTENANCE SERVICES ON-SITE FOR SUPPORTED UNITS.
7. DEPOT LEVEL MEDICAL MAINTENANCE ACTIVITY.
8. ORGANIC, UNIT LEVEL, AND COMMAND-DIRECTED IDS LEVEL MEDICAL MAINTENANCE FUNCTION SERVES ABOVE IDS.

E – EVACUATION OF UNSERVICEABLE EQUIPMENT/ COMPONENTS

M – MAINTENANCE SUPPORT

R – REPLACEMENT OF UNSERVICEABLE EQUIPMENT BY THE SUPPLY SYSTEM

S – SHIPMENT OF MEDSTEP ASSETS

MST – MOBILE SUPPORT TEAM

——— PRIMARY LINE OF SUPPORT

– – – EMERGENCY LINE OF SUPPORT

Figure 1-2. Medical maintenance flow.

c. Blood Management.

(1) Blood management is a separate activity within the theater. Availability of blood to the division is determined by the corps surgeon. It consists of blood collecting companies, processing detachments, and blood banking activities at different levels in the force structure. Only Group O liquid red blood cells are expected to be available to the division. Blood products to Army MTFs in the division will be provided by the DMSO. The DMSO coordinates through the DMOC with the division movement control center to identify backhaul ambulances to transport blood to the requesting unit. The DMSO obtains Group O liquid red blood cells from a supporting blood supply unit located at the corps level. Shipment of blood forward is either coordinated by the corps blood supply unit with the corps movement control center or accomplished by backhaul on medical vehicles (air and ground). Emergency resupply can be accomplished by air ambulances from the medical battalion (evacuation). Demands come from medical companies of the MSB, FSB, or division medical battalion.

(2) The emerging blood management program is incorporated into MEDLOG units because of the similarities in storage and distribution to other Class VIII items. This new organizational structure provides for a single blood management network throughout the theater while ensuring responsive support to blood transfusing activities. Blood support is a combination of four systems (medical, technical, operational, and logistical) and must be considered separate from laboratory support. The distribution of all resuscitative fluids (including albumin) is managed by the MEDLOG units. Liquid blood resources are also made available to division-level medical units through medical logistical channels. At the division level, medical field refrigerators allow the DMSO to provide blood as far forward as the FSMC. The DMSO obtains liquid blood from the blood platoon assigned to the corps MEDLOG battalion (forward).

CHAPTER 2

THE DIVISION

2-1. Typical Division

The division is the largest fixed organization that trains and fights as a tactical team. It is organized with varying numbers and types of combat, CS, and combat service support (CSS) units. There are five types of divisions–armored, infantry, light infantry, airborne, and air assault. A division may be composed of eight to eleven maneuver battalions and other CS and CSS units. All divisions are organized with the same base–

- A division headquarters and headquarters company (HHC).
- Three brigade HHCs.
- An aviation brigade (AB) HHC.
- A division artillery (DIVARTY).
- A DISCOM. Medical companies organic to the division are DISCOM assets.
- An air defense artillery battalion.
- An engineer battalion.
- A signal battalion.
- A military intelligence battalion.
- A military police company.
- A chemical company (in most cases).

A division may have 11,000 to 17,000 soldiers assigned. When properly reinforced, a division is a self-sustaining force capable of independent operations for long periods of time. Individual battalions in a division may be task-organized into separate task forces to fight independently. A division usually fights as a part of a corps or a joint task force. Divisions are the backbone of the Army, and the AirLand Battle is won or lost by their brigades and battalions. Figures 2-1 through 2-5 show the organizations within the light infantry, airborne, air assault, armored, and infantry (mechanized) divisions. Definitive information pertaining to all the divisions listed above is found in FM 71-100.

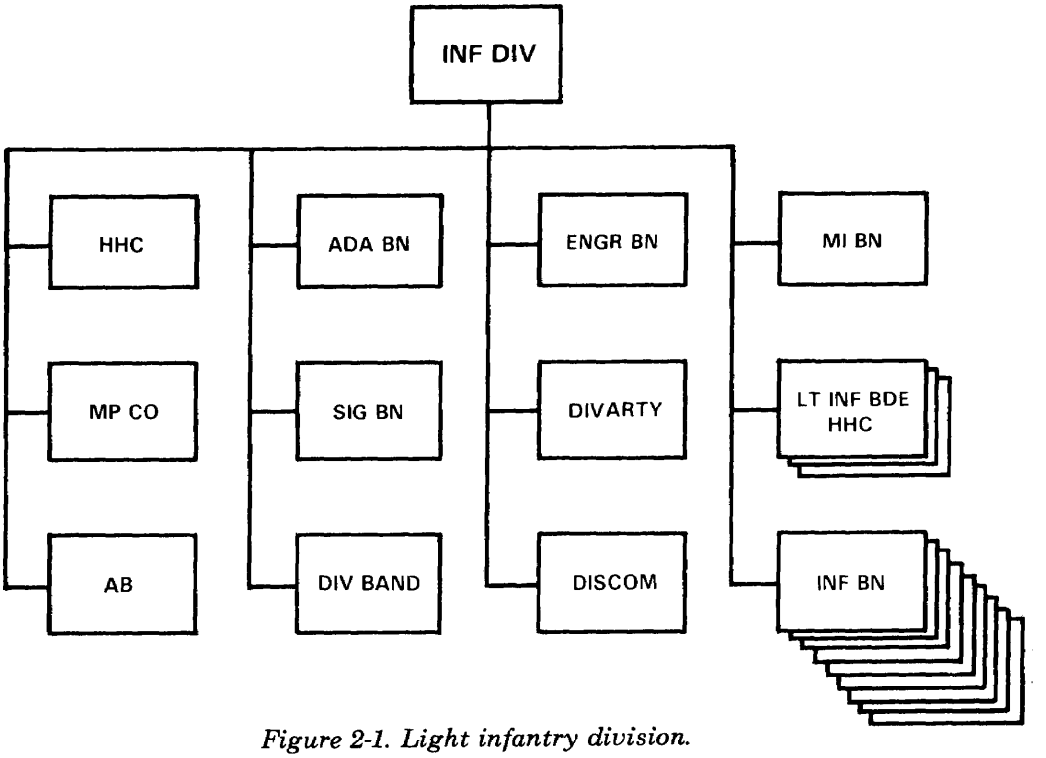

Figure 2-1. Light infantry division.

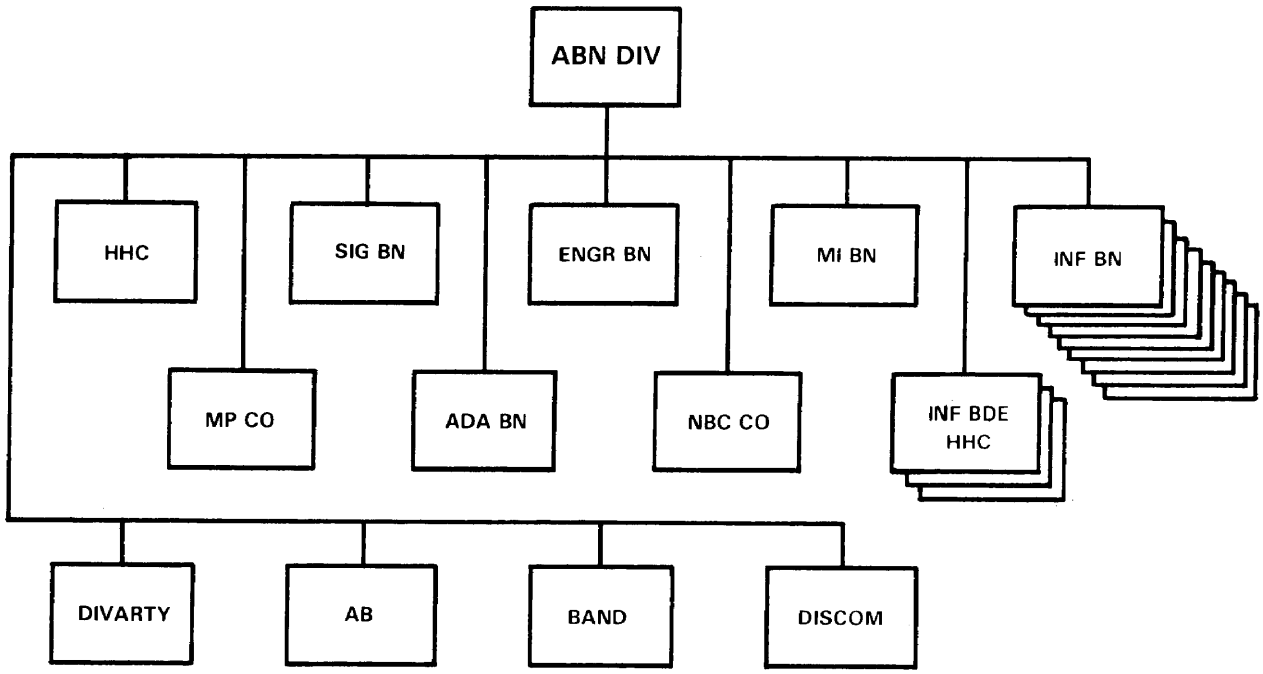

Figure 2-2. Airborne division.

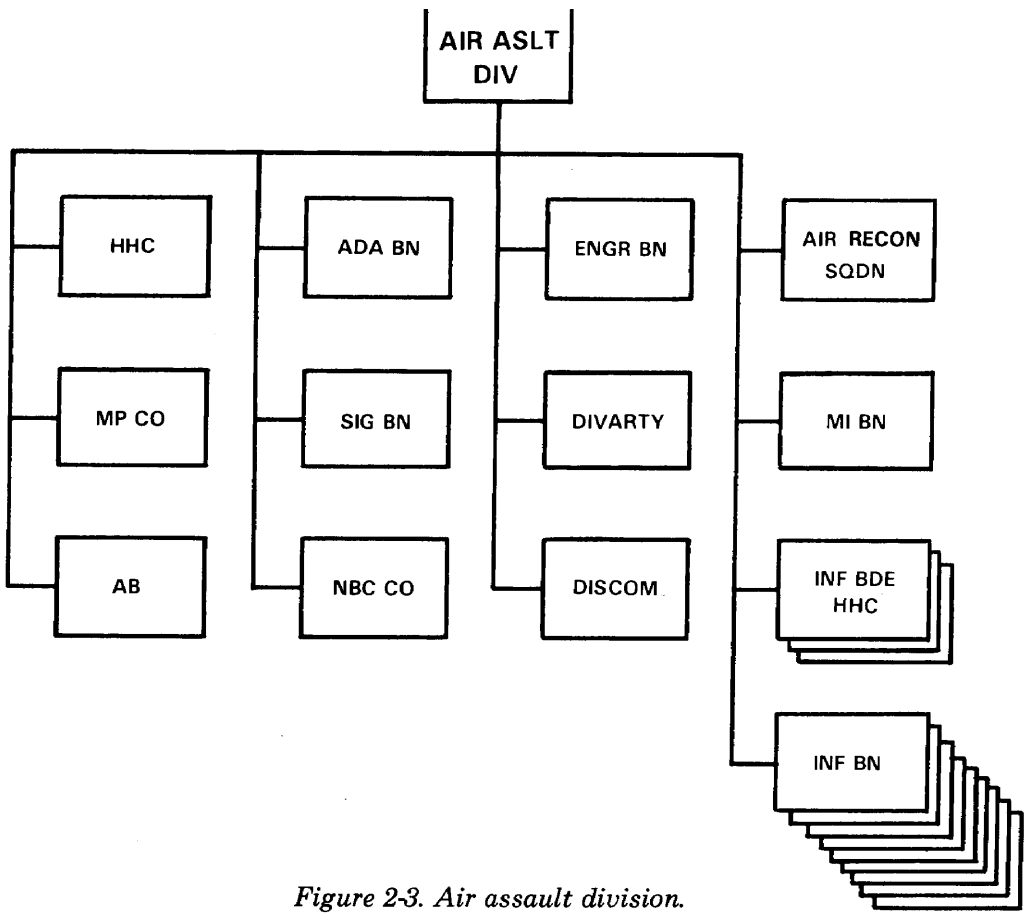

Figure 2-3. Air assault division.

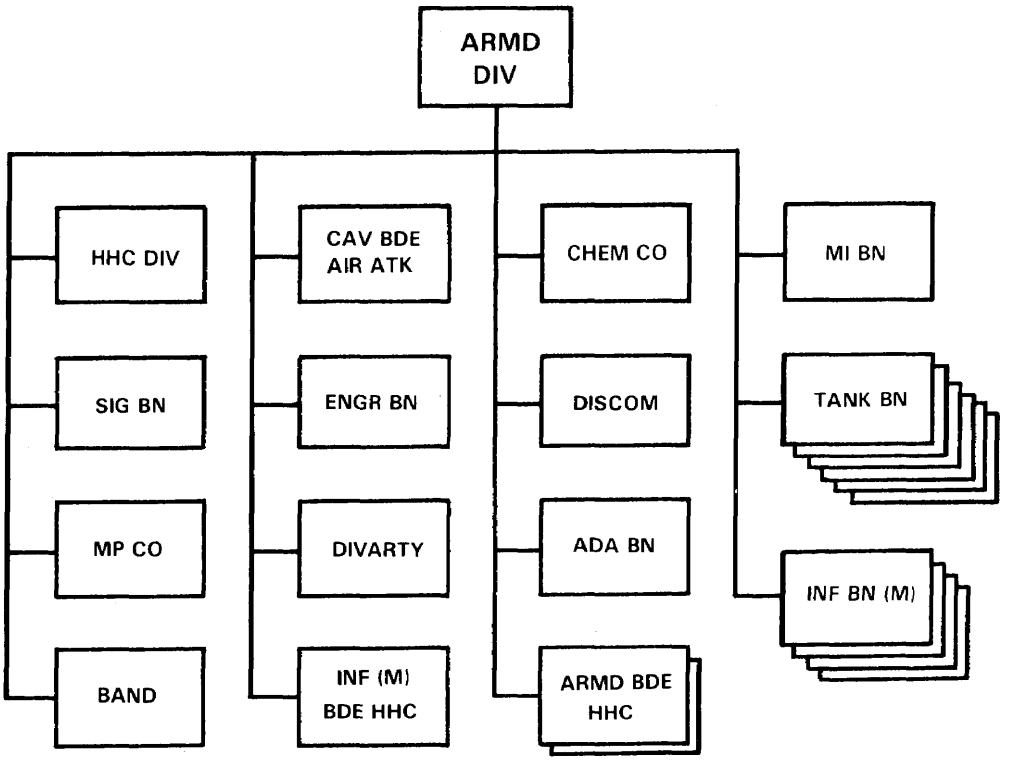

Figure 2-4. Armored division.

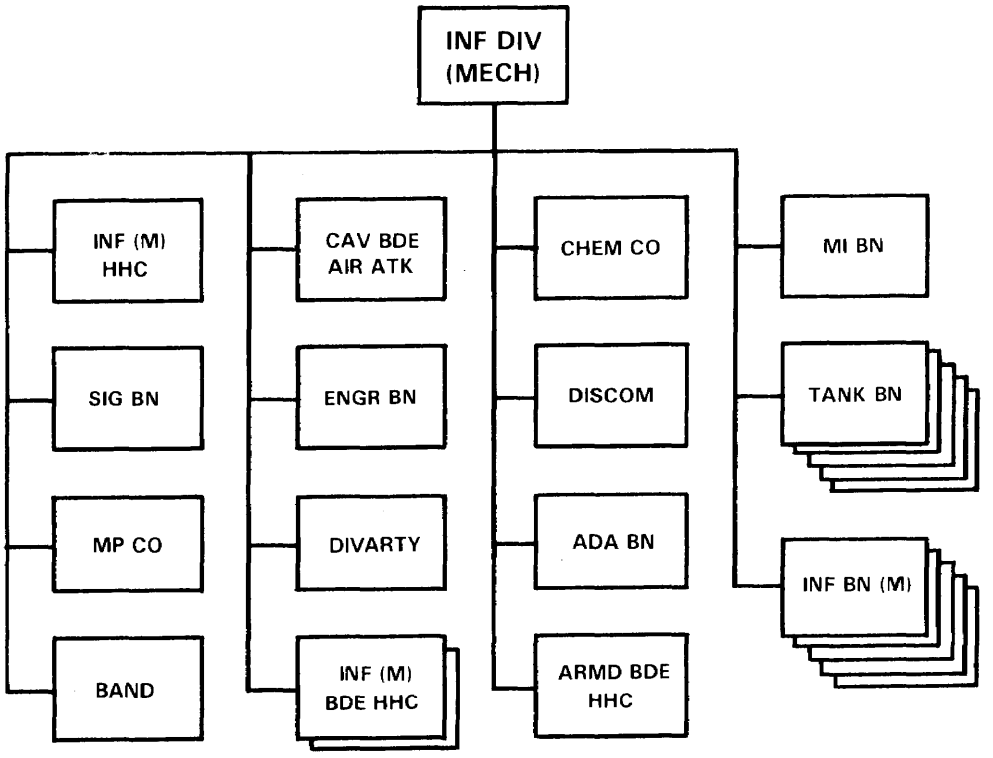

Figure 2-5. Infantry division (mechanized).

2-2. Division Headquarters

a. The division headquarters provides C2 and supervision of the tactical and administrative operations of the division and its organic, attached, or supported units.

b. The HHC of the division provides logistical support and personnel for the division headquarters and staff section. It is normally located close to the division main command post.

c. Figure 2-6 depicts the elements/sections of the division headquarters.

2-3. Major Commands in the Division

There are six major commands within the division, They include three maneuver brigades, an aviation brigade, a DIVARTY, and a DISCOM.

a. The maneuver brigade headquarters provides C2 facilities necessary to employ attached and supporting units. The brigade normally controls from two to five maneuver battalions. It can be employed in independent operations when properly organized for combat. The only unit permanently assigned to the maneuver brigade is the brigade HHC. The necessary combat, CS, and CSS units used to accomplish the brigade's mission are attached to, under operational control (OPCON) of, or placed in support of the brigade. The HHC of the maneuver brigade furnishes logistical support, to include ground command vehicle support, personnel for the brigade headquarters staff section, and security.

b. The aviation brigade provides the division commander a C2 headquarters with organic lift, attack, observation, and general support aircraft which can be tailored to support the division commander's plans. The aviation brigade's missions are to–

- Find, fix, and destroy enemy forces using fire and maneuver.
- Provide CS and CSS in coordinated operations as an integrated member of the combined arms team.

The speed and mobility of the aviation brigade allow it to conduct deep, close, and rear operations. The aviation brigade possesses the flexibility and versatility to perform a wide variety of roles throughout the entire range of maneuver, CS, and CSS functions in support of division combined arms operations. These roles can be performed by the aviation brigade during offensive and defensive operations in high-, mid-, and low-intensity conflicts. Planning at division level must allow for integration of the aviation brigade into the combined arms scheme of ground maneuvers. However, the aviation brigade is not a maneuver brigade in the same sense as the other ground maneuver brigades. The aviation brigade is not routinely committed as a maneuver force. When properly augmented and supported, it can be committed for short periods in a maneuver role in the conduct of combat operations. The brigade is most effective when its aerial forces are concentrated at critical times and places to exploit the maneuver effect of the combined arms teams. Thus, the brigade extends and augments division capabilities to strike the enemy from multiple directions. The control measures for the tactical employment of the aviation brigade differ little in principle from the employment of the ground maneuver force.

c. The DIVARTY is the primary organic indirect fire support for the division. The firepower of the DIVARTY is augmented by close air support, attack helicopters, mortars, artillery resources of higher headquarters, and when feasible, naval gunfire. The DIVARTY has the dual mission of integrating all fire support to the division, as well as providing field artillery fires for close support, interdiction, and counterfire support to the division. The primary function of the fire support units is to provide continuous and timely support to combat units by locating, identifying, and neutralizing or destroying those targets most likely to impede the successful accomplishment of the division's mission. The DIVARTY commander is the principal advisor to the division commander for fire support matters and is the fire support coordinator (FSCOORD). Both the division Assistant Chief of Staff (Operations and Plans) (G3) and DIVARTY commander interact continuously throughout the planning sequence, the decision process, and the execution of the mission.

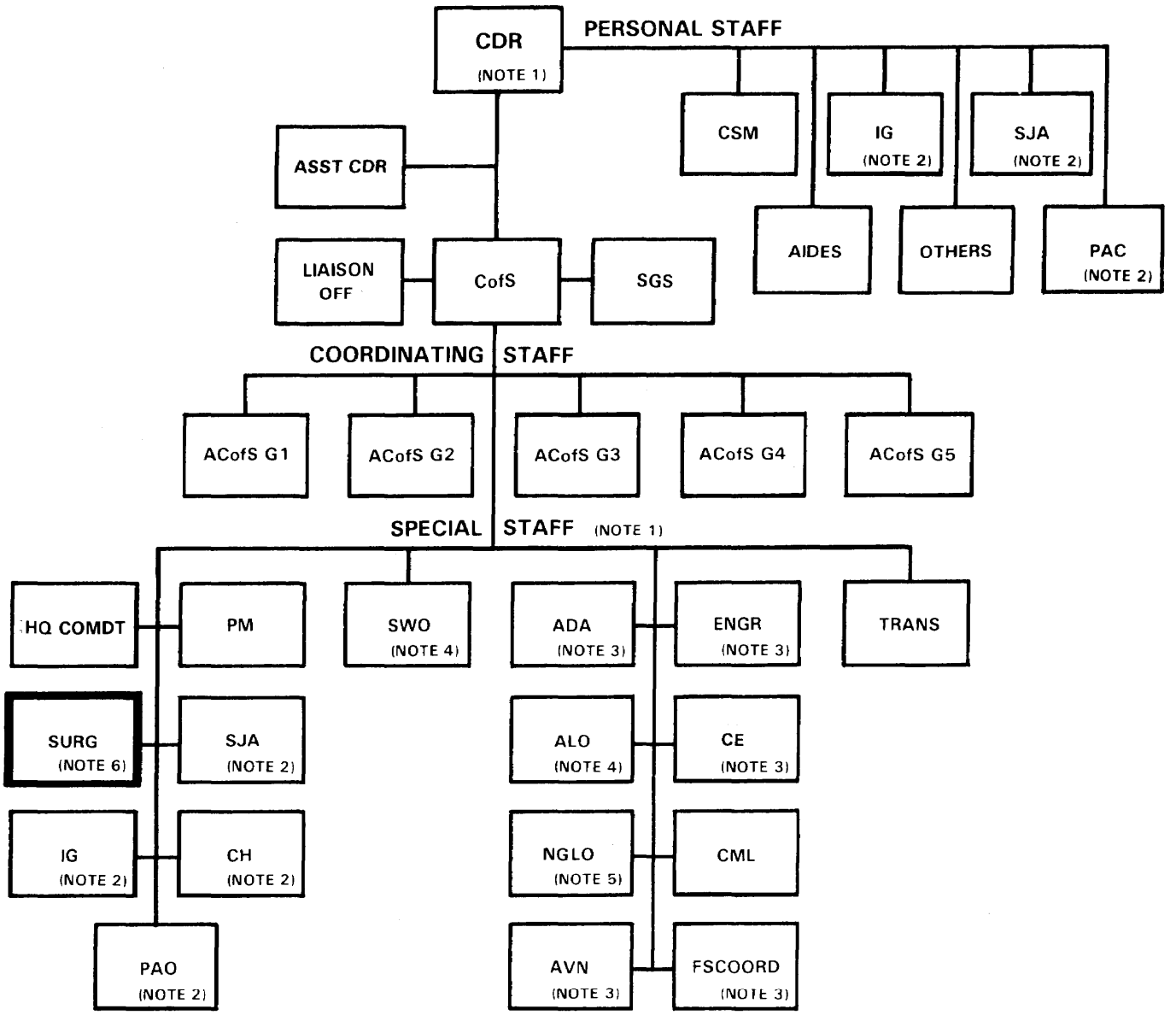

NOTES:

1. SPECIAL STAFF SECTIONS ARE GROUPED UNDER THE COORDINATING STAFF SECTION RESPONSIBLE FOR PRIMARY STAFF COORDINATION.

2. DIRECT ACCESS TO THE COMMANDER AS A PERSONAL STAFF OFFICER AS REQUIRED. THE IG AND THE SJA BY REGULATION (AR 20-1 AND AR 27-1) ARE MEMBERS OF THE PERSONAL STAFF.

3. ALSO SUBORDINATE UNIT COMMANDER.

4. PROVIDED BY AIR FORCE.

5. PROVIDED BY THE NAVY AND MARINE CORPS.

6. ALSO SUBORDINATE UNIT COMMANDER, EXCEPT IN THOSE DIVISIONS ORGANIZED UNDER THE MAIN SUPPORT BATTALION/FORWARD SUPPORT BATTALION DESIGN.

Figure 2-6. Division headquarters.

d. The DISCOM provides division-level CSS to all organic and attached elements of the division. It is organized to provide maximum amounts of CSS within prescribed strength limitations. Combat service support activities are organized and positioned so they can provide responsive and effective support to tactical units in combat environments. The DISCOM can, on a very limited basis, furnish CSS to nondivisional units in the division area. The DISCOM commander is the principal CSS operator of the division and exercises full command authority over all the organic units of the supported command. The division Assistant Chief of Staff (Logistics) (G4) on the other hand, has coordinating staff responsibility for logistics planning and develops the division-level plans, policies, and priorities. The relationship between the division G4 and the DISCOM commander must be extremely close because of the similarities of interests. The G4's planning role does not relieve the DISCOM commander of the responsibility for advising the division staff during formulation of plans, estimates, policies, and priorities. The DISCOM commander normally locates the DISCOM elements in the DSA and the BSA.

(1) In the airborne and air assault divisions where the DISCOM is not organized under the MSB/FSB design, forward area support teams (FASTS) are employed. The FAST elements and units are under the supervision of the forward area support coordination officer (FASCO). The FASCOs are deployed out of the DISCOM headquarters to each of the BSAs to coordinate and control all CSS activity. Additional information pertaining to the FASCO is provided in Chapter 4, Section II.

(2) In those DISCOMs under the MSB/FSB design, the MSB supports the DSA and the FSBs are deployed forward to the BSA. The DISCOM is organized to effectively provide the maximum amount of CSS within prescribed strength limitations while providing the most effective and responsive support to tactical units in a combat environment.

(3) In all divisions, the DISCOM headquarters controls the logistical and health service support for the division. The DISCOM headquarters ensures that the division is effectively organized and positioned for immediate response to the tactical commander's CSS requirements. The DISCOM headquarters is normally located in the DSA. It provides area support to all divisional units in the division rear area and backup support to those DISCOM elements that are deployed to forward areas. Figure 2-7 shows the organizational structure of a DISCOM headquarters which is not under the MSB/FSB design; Figure 2-8 shows the typical organizational structure for a DISCOM headquarters under the MSB/FSB design. Additional information pertaining to the DISCOM headquarters under the MSB/FSB design is provided in Chapter 3 of this manual and in FM 63-22. FM 63-2 contains information for DISCOM headquarters which are not under the MSB/FSB design.

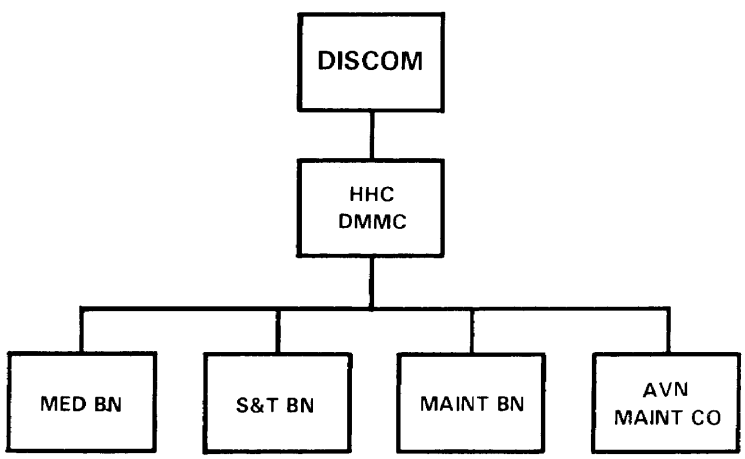

Figure 2-7. DISCOM (not MSB/FSB design).

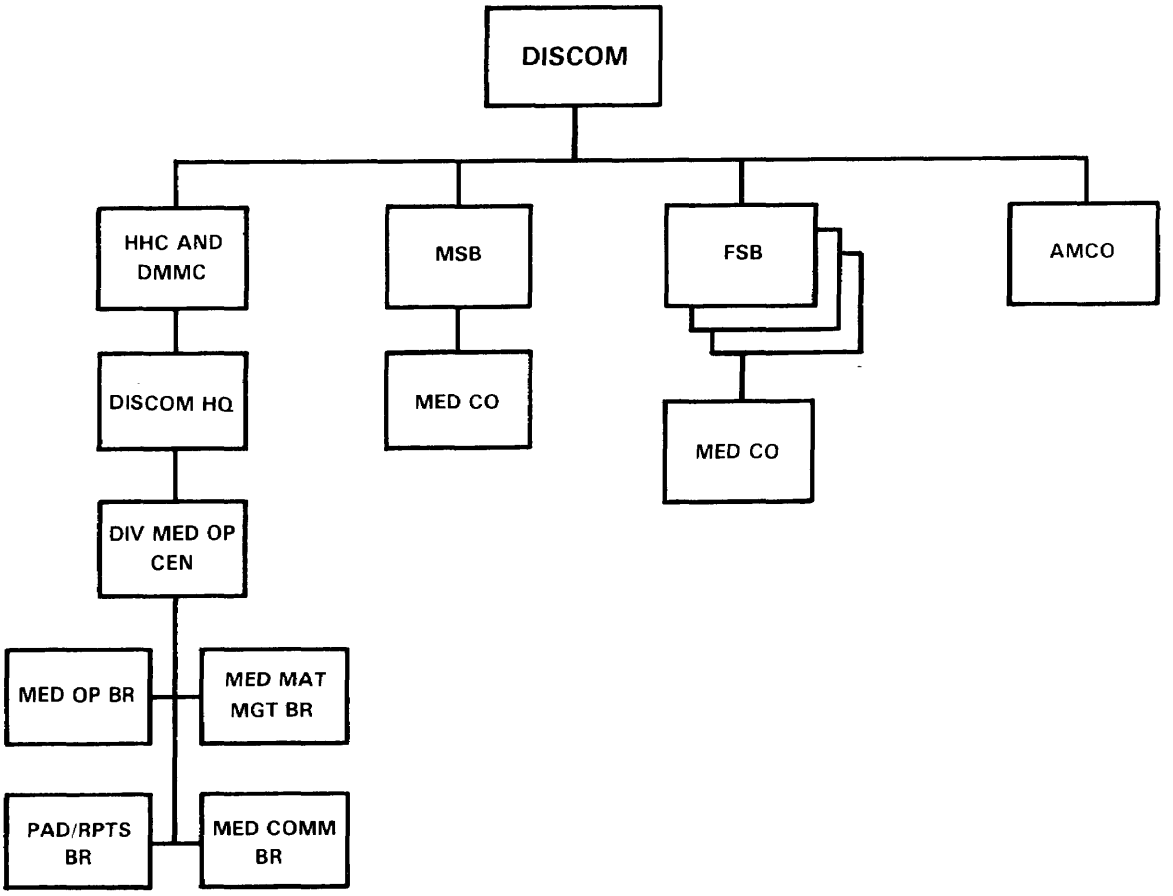

Figure 2-8. DISCOM (MSB/FSB design).

CHAPTER 3

MEDICAL UNITS AND ELEMENTS OPERATING IN THE DIVISION AREA

Section I. MEDICAL BATTALION

3-1. Division Support Command Medical Battalion

The DISCOM medical battalion is found only in those divisions that are not under the MSB/FSB design. The medical battalion is currently found in airborne and air assault divisions. The DISCOM medical battalion is organized to provide Echelons I and II (division level) HSS for the division and attached corps elements on an area support basis. The airborne and air assault divisions' medical battalions contain surgical squads. The air assault division medical battalion has an organic air ambulance company. In peacetime, the medical battalion commander's position is usually filled by a Medical Service Corps (MS) officer. Upon mobilization, this position is filled by a Medical Corps (MC) officer who also serves as the division surgeon. The modular design of the medical battalions readily lends itself to augmentation, reinforcement, or reconstitution of ineffective modular units.

a. Mission. The mission of the DISCOM medical battalion headquarters is to provide C2 for HSS. The overall mission of the medical battalion is to clear the battlefield and maximize the early RTD of trained combat soldiers. Its functions are centered around prevention, evacuation, treatment, and RTD. The battalion provides Echelons I and II HSS and medical staff advice and assistance for all assigned and attached units of the division. Specific functions of the medical battalion include–

- Operating division clearing stations with limited short-term holding capability (72 hours) (40 cots for the airborne and air assault divisions).
- Providing limited surgical techniques for airborne and air assault divisions.
- Providing area support medical evacuation of patients.

Specific functions of the battalion headquarters include–

- Providing divisionwide medical supply, resupply, and biomedical equipment maintenance service (DMSO).
- Providing Echelons I and II HSS support on an area basis to units without organic medical elements.
- Providing optometry services.
- Providing sustaining and emergency dental treatment and limited preventive dentistry.
- Providing CSC mental health and limited NP services.
- Providing consultation service for patients referred from Echelon I (unit level) MTFs.
- Providing preventive medicine consultation services.
- Providing blood to Echelon II (division level) MTFs.
- Reinforcing or reconstituting Echelon I (unit level) medical elements.

NOTE

Additional functions will be discussed in Chapter 5.

b. Organization. Figure 3-1 depicts the DISCOM medical battalion in the airborne and air assault divisions. Definitive information pertaining to the DISCOM medical battalion is provided in FM 8-10.

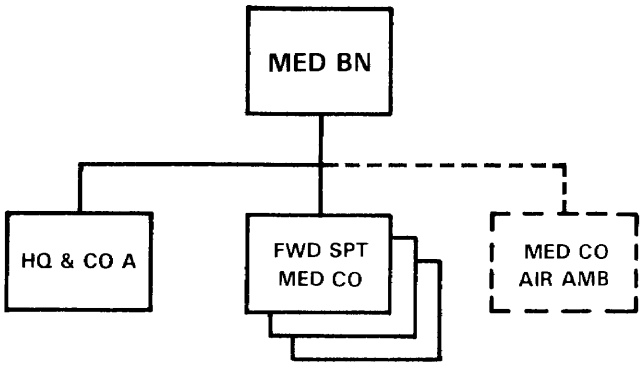

---- DENOTES AIR ASSAULT DIVISION ONLY.

Figure 3-1. Medical battalion (airborne and air assault divisions).

3-2. Headquarters and Company A Medical Battalion

The Headquarters and Company A under the L-edition TOE in the airborne and air assault divisions are DISCOM assets. Headquarters and Company A collocates with the medical battalion headquarters which locates with the division rear element in the DSA.

a. Organization. Headquarters and Company A is similar in design to the three FSMCs which are discussed later in this chapter. Its major functional components (Figure 3-2) include a company headquarters, a treatment platoon, and an ambulance platoon. The company provides for Echelons I and II HSS functions with limited surgical capabilities in the DSA. At an authorized level of organization (Echelon I), the Headquarters and Company A is dependent upon–

- Appropriate levels of the division for religious, legal, personnel, and administrative services; clothing exchange and bath services; and graves registration. Military police provide general support for area security and damage control.

- Appropriate element levels of corps for finance, laundry, personnel, and administrative support.

- Corps assets for air and ground evacuation of patients to corps-level MTFs.

b. Capabilities. Headquarters and Company A capabilities include–

- Performing triage, initial resuscitation, stabilization, and preparation for evacuating sick, wounded, or injured patients generated in the division rear.

- Providing limited consultation service for patients referred from Echelon I (unit level) MTFs.

- Providing emergency and sustaining dental care and limited preventive dentistry.

- Providing field-level medical laboratory and radiology services commensurate with Echelon II (division level) treatment.

- Providing patient holding for up to 40 patients who will RTD within 72 hours.

- Providing medical evacuation (10 ground ambulances, wheeled vehicles assigned) on an area support basis.

3-3. Forward Support Medical Company

The FSMC is organic to the medical battalion. There are three FSMCs assigned to each medical battalion and one FSMC assigned to each FSB. Each FSMC supports a maneuver brigade and conducts medical support operations from the BSA. When the FSMC is deployed forward in the BSA as an element of the FAST, it is under the operational control of the FASCO. The FSMC also provides Echelons (Levels) I and II area medical support to division and corps support elements operating within the brigade area.

a. Organization. The FSMC is organized (Figure 3-3) into a company headquarters, a treatment platoon, and an ambulance platoon. It is dependent on the supported brigade for security and tactical movement. It is also dependent upon the FAST for food service and maintenance support when deployed as an element of the FAST (see Chapter 4, Section II). The FSMC usually deploys with its division clearing station in the BSA; however, the organic treatment squads have the capability of operating independently of the medical company for a limited period of time as the tactical situation permits.

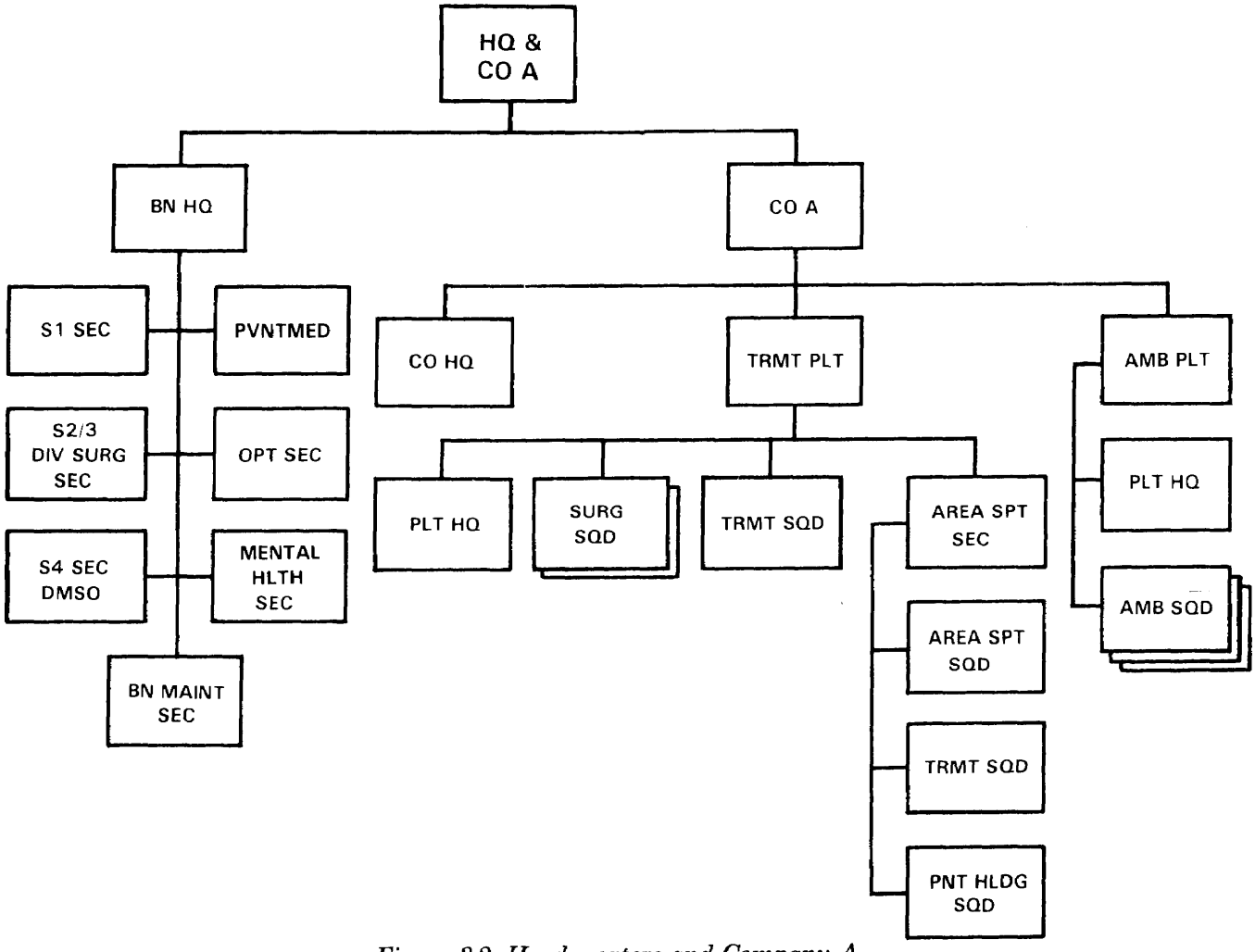

Figure 3-2. Headquarters and Company A, medical battalion, air assault division.

b. Capabilities. The FSMC provides–

- Treatment of patients with minor disease, triage of mass casualties, initial resuscitation and stabilization, ATM, and preparation of sick, wounded, or injured NRTD patients for evacuation.

- Medical evacuation on an area support basis and from BAS to supporting MTF (10 ground ambulance, wheeled vehicles assigned).

- Emergency and sustaining dental treatment.

- Class VIII resupply to units operating in the maneuver brigade AO.

- Limited medical laboratory and radiology services commensurate with division-level treatment.

- Outpatient consultation services for patients referred from unit-level MTFs.

- Patient holding for up to 40 patients who will be able to RTD within 72 hours.

- Food service support for patients and assigned personnel (airborne and air assault divisions).

- Reinforcement or reconstitution of BASs.

Additional information pertaining to the FSMC may be found in FM 8-10.

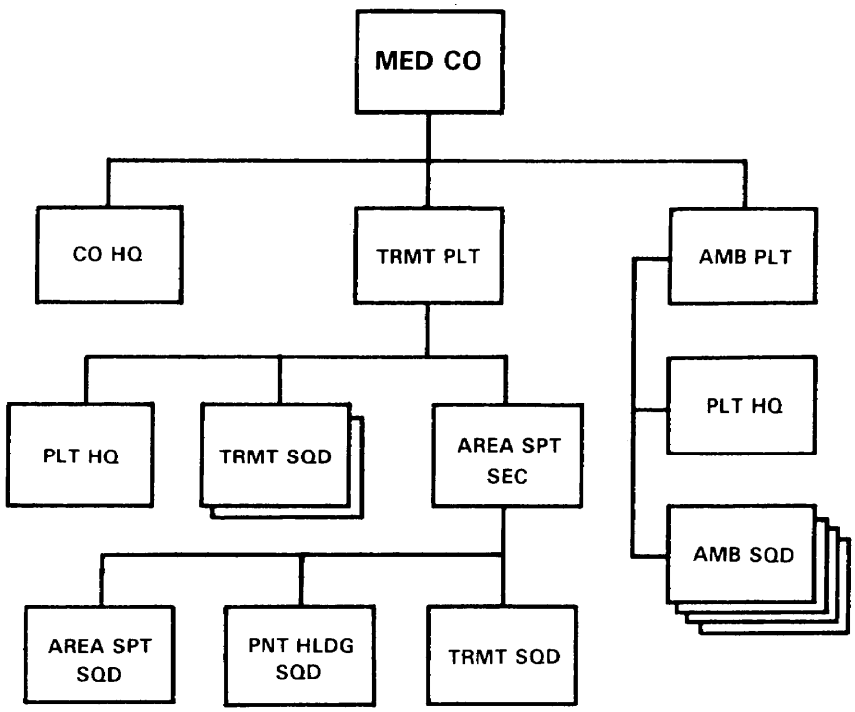

Figure 3-3. Forward support medical company.

Section II. DIVISION MEDICAL ELEMENTS UNDER THE MAIN/FORWARD SUPPORT BATTALION DESIGN

3-4. Division Medical Operations Center

The DMOCs are found in heavy arid light divisions organized and operating under the MSB/FSB design and are a DISCOM headquarters element. Under this design, Echelon II (division level) HSS is coordinated and provided by the DISCOM medical elements which include–

- Division medical operations center, DISCOM HHC–located in the DSA.
- Medical company, MSB–located in the DSA.
- Medical company, FSB–located in the BSA.

a. Mission. The DMOC is responsible for advising and assisting the DISCOM commander and staff in determining requirements for HSS. In coordination with the division surgeon and appropriate elements of the division coordinating staff group, it is responsible for assisting the division surgeon with planning, coordinating, monitoring, and ensuring HSS to the division. It is responsible for synchronizing HSS operations to achieve maximum use of division and corps medical elements under OPCON or attachment. Specific functions of the DMOC include–

- Planning and ensuring that Echelon II HSS for the division is provided IAW current doctrine.
- Developing and maintaining the division medical troop list, revising as required, to ensure task organization for fission accomplishment.

- Planning and coordinating HSS operations of DISCOM organic medical assets and/or attached corps assets to include reinforcement or reconstitution.

- Prioritizing the reallocation of organic and corps medical augmentation assets to the division as required by the tactical situation, in coordination with the DISCOM Operations and training Officer (S3).

- Ensuring that division standing operating procedures (SOPS), plans, and policies for HSS are prepared and executed.

- Monitoring medical training in the division and providing information to the division surgeon.

- Advising and assisting the medical company commander and battalion-level medical platoon or section leaders on all HSS issues with emphasis on an optimal "go-to-war" posture.

- Planning, coordinating, and prioritizing medical logistics and the logistical aspect of blood management.

- Coordinating and directing medical evacuation from division-level MTFs to corps-level MTFs through the medical brigade/group medical regulating officer (MRO) and operations officer.

- Coordinating the evacuation of enemy prisoner of war (EPW) casualties.

- Coordinating and managing the disposition of captured medical materiel.

- Planning, prioritizing, and coordinating preventive medicine missions, in coordination with the division preventive medicine officer.

- Planning, prioritizing, and coordinating CSC measures, in coordination with the division psychiatrist.

- Prioritizing and coordinating dental support, in coordination with the division dental surgeon.

NOTE

The division surgeon exercises technical control of all medical activities within the division. The DMOC coordinates HSS IAW technical parameters established by the division surgeon. The DMOC, therefore, coordinates division HSS with the division surgeon and other appropriate elements of the division coordinating staff group IAW FM 101-5 and the division's HSS SOP. All responsibilities and organizational relationships described in this manual should be understood in light of the above doctrinal statements. Exceptions to the statements will be specifically stated when applicable.

b. Organization. Figure 3-4 depicts the typical organization and staffing of the DMOC. The DMOC consists of a medical operations branch, a medical materiel management branch, a patient disposition/reports branch, and a medical communications branch. Additional information pertaining to the DISCOM headquarters and the DMOC is found in FMs 8-10-3 and 63-22.

3-5. Medical Company, Main Support Battalion (Heavy and Light Divisions)

The medical company, MSB, provides unit- and division-level HSS and medical staff advice and assistance on an area basis to units operating in the DSA that are not otherwise provided that support. The medical company and the DMOC coordinate HSS operations through medical channels. Health service support plans developed by the DMOC and approved by the DISCOM commander are forwarded to the MSB headquarters for execution. Additional information pertaining to the medical company, MSB, is found in FMs 8-10, 8-10-3, and 63-21.

a. Organization. The medical company is organized with a company headquarters, an ambulance platoon, a treatment platoon, a DMSO,

and preventive medicine, mental health, and optometry sections. Figure 3-5 shows the organizational structure of the medical company, MSB (heavy and light divisions).

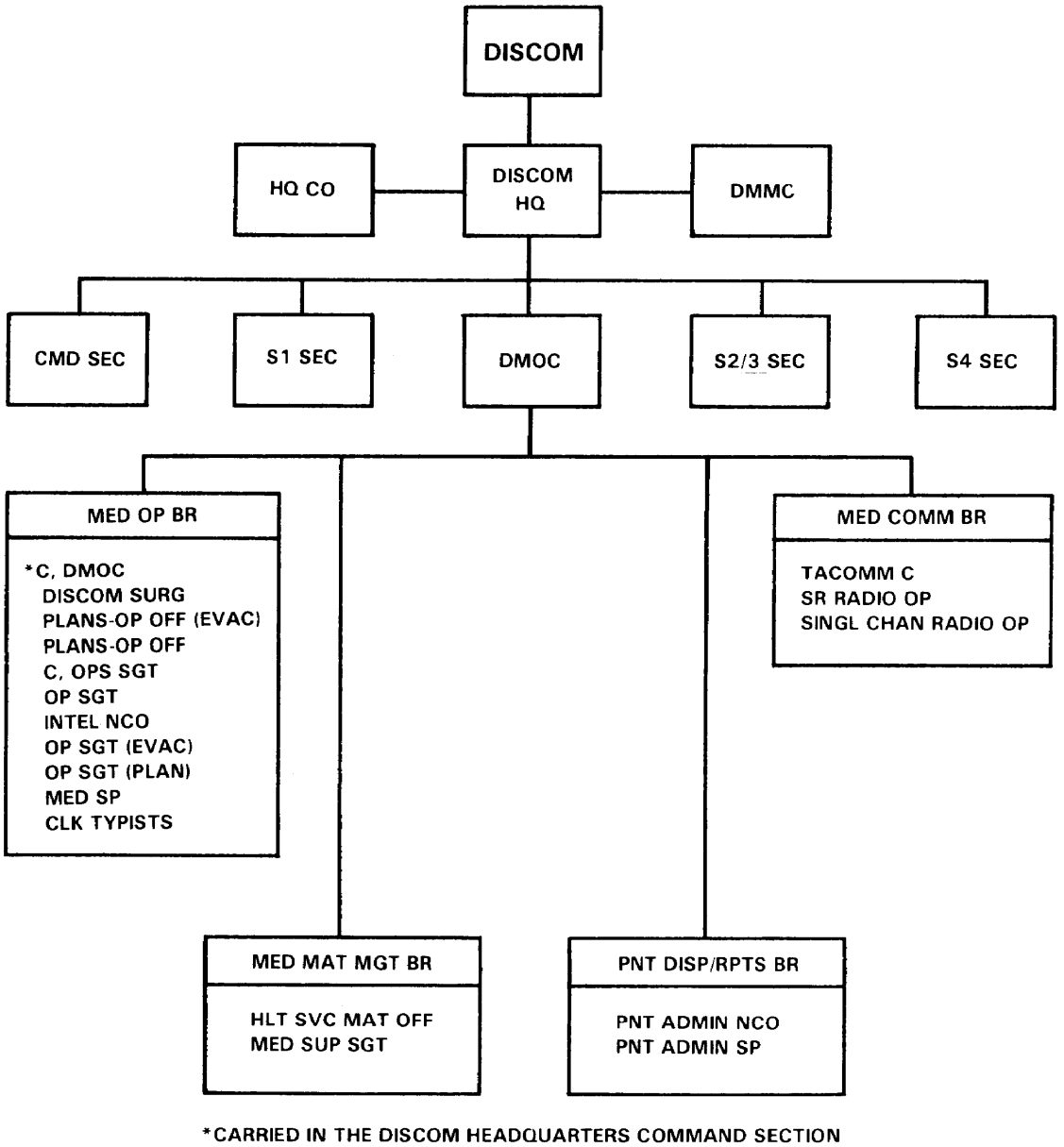

Figure 3-4. Division medical operations center.

b. Capabilities. The medical company, MSB–

- Performs triage, initial resuscitation, stabilization, and preparation of sick, wounded, or injured patients for evacuation.

- Provides consultation service for patients referred from unit-level MTFs.

- Performs emergency and sustaining dental care and limited preventive dentistry.

- Provides blood.

- Provides limited medical laboratory and radiology services commensurate with division-level treatment.

- Provides medical evacuation (10 ground ambulances, all wheeled vehicles assigned) on an area support basis.

- Provides CSC and mental health services to include diagnosis, treatment, and disposition of NP disorders and disease cases.

- Provides policy and guidance for the prevention, diagnosis, management, and RTD of combat stress related casualties.

- Provides preventive medicine and environmental health training, surveillance, inspections, and consultation for division units.

- Provides optometry support limited to eye examinations, spectacle frame assembly using presurfaced single-vision lenses, and repair services for assigned and attached units of the division.

- Provides patient holding for up to 40 patients (heavy division) and 20 patients (light division) who will be able to RTD within 72 hours.

- Provides Class VIII resupply and medical maintenance.

- Provides reinforcement or reconstitution of FSMCs.

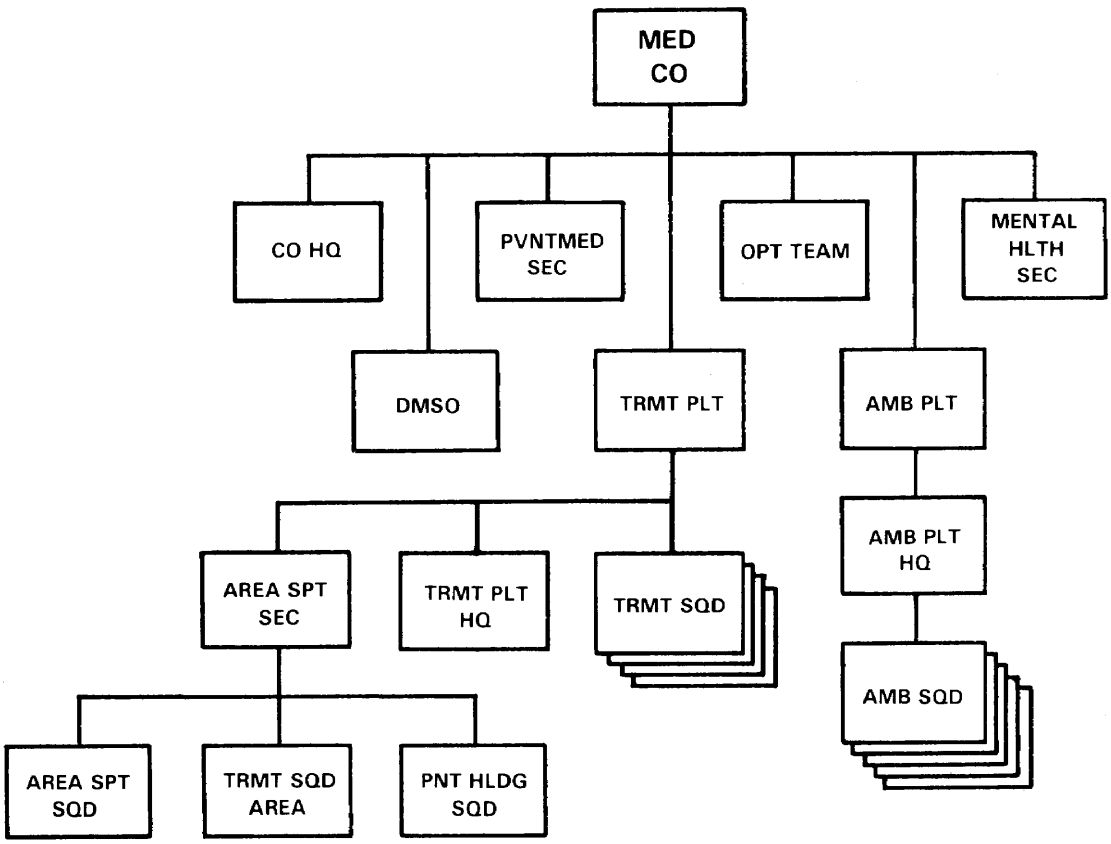

Figure 3-5. Medical company, MSB (heavy and light divisions).

3-6. Medical Company, Forward Support Battalion (Heavy and Light Divisions)

The medical company, FSB, provides HSS at Echelons (Levels) I and II for the supported brigade and area medical support for the BSA. The medical company, FSB, commander (dual-hatted as the brigade surgeon) is the principal manager of HSS assets assigned or attached to the brigade. The medical company coordinates HSS operations through medical channels with the DMOC and the medical company, MSB. Any tasking of the medical company, FSB, will be accomplished through the FSB headquarters. Additional information pertaining to the medical company, FSB, is found in FMs 8-10, 8-10-3, and 63-20.

a. Organization. The medical company, FSB, is organized with a company headquarters, a treatment platoon, and an ambulance platoon. Figure 3-6 shows the medical company, FSB (heavy division) organization and Figure 3-7 shows the medical company, FSB (light division) organization.

b. Capabilities. The medical company, FSB–

- Performs triage, initial resuscitation, stabilization, and preparation of sick, wounded, or injured patients for evacuation.
- Provides consultation service for patients referred from unit-level MTFs.
- Provides emergency and sustaining dental care and limited preventive dentistry.
- Provides field-level medical laboratory and radiology services commensurate with division-level treatment.
- Provides medical evacuation for patients within the brigade AO (10 ground ambulances, 6 wheeled, and 4 track vehicles [heavy divisions] and 10 ground ambulances, wheeled vehicles [light divisions]).
- Provides patient holding for up to 40 patients (heavy division) and 20 patients (light division) who will RTD within 72 hours.
- Provides medical evacuation for patients from BASS to the MTF.
- Performs medical resupply to units in the brigade area.
- Provides blood.

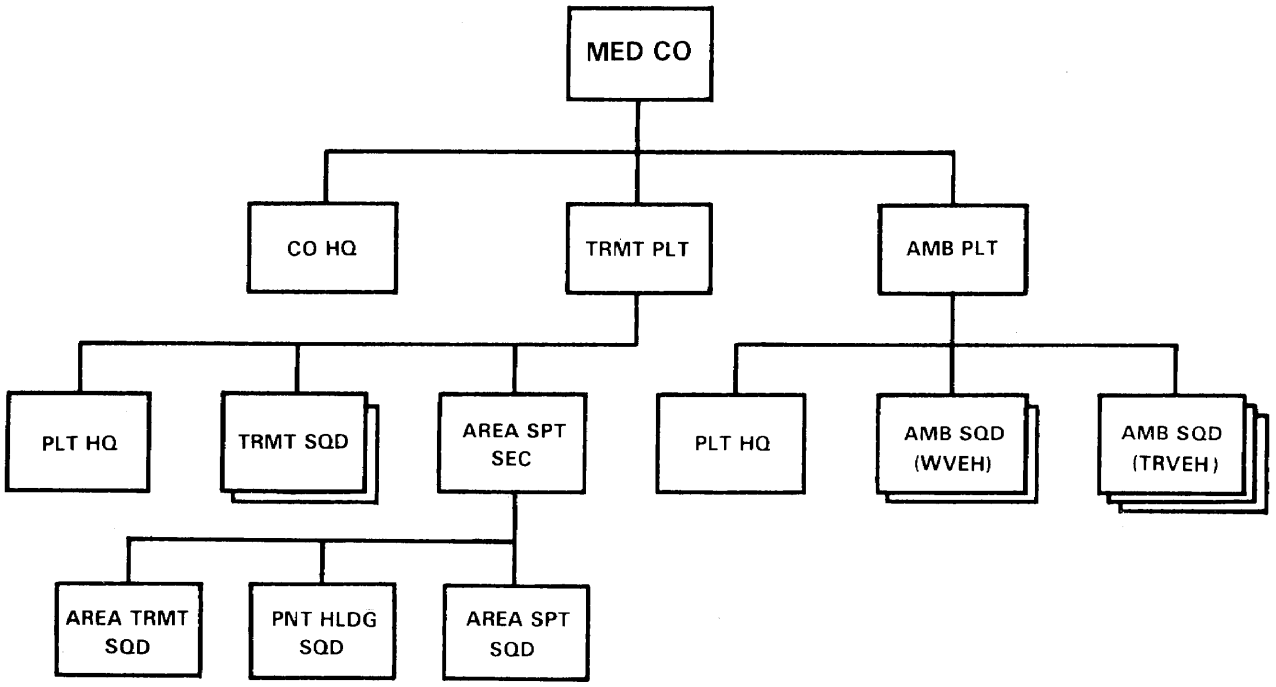

Figure 3-6. Medical company, FSB (heavy division).

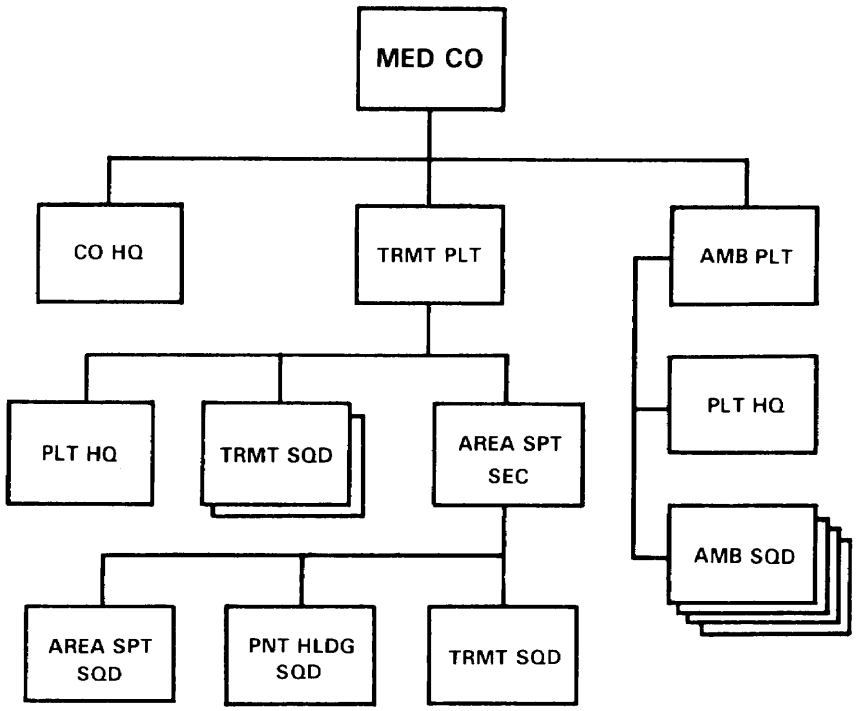

Figure 3-7. Medical company, FSB (light division).

Section III. ORGANIC MEDICAL ELEMENTS IN COMBAT AND COMBAT SUPPORT UNITS

3-7. Medical Platoons and Sections

The aviation brigade has a medical section assigned to the brigade HHC. This section provides medical treatment for the brigade. The flight surgeon (brigade surgeon) is the primary care physician for the brigade. Medical platoons and other sections are organic to combat and some CS battalions. Medical platoons and sections assigned to combat battalions are very similar in design in all divisions. These medical platoons are organic to the battalion HHC. The CS battalions, such as engineer, artillery, and air defense artillery battalions, have either a medical platoon or a medical section. The CS battalions are dependent upon the supporting medical company for Echelon (Level) II medical support. The medical platoon leader in a combat battalion is a physician and also serves as the battalion surgeon. The battalion surgeon is assisted by a field medical assistant (area of concentration [AOC] 67B). During peacetime, the field medical assistant serves as the medical platoon leader. The battalion surgeon is the medical advisor to the battalion commander and his staff. The medical platoons and sections assigned to the combat and CS unit are structured to meet the HSS requirements of the parent organization. The tactical situation or changes in the mission may necessitate reinforcement or augmentation of the platoon or section.

3-8. Organization and Capabilities of the Typical Medical Platoon

a. Organization. An example of a typical medical platoon is found in the HHC light infantry battalion. It is functionally organized with a headquarters section, a treatment squad (two

treatment teams), an ambulance section consisting of two ambulance squads (four ambulance teams), and a combat medic section. The medical platoon is organized as shown in Figure 3-8. Additional information pertaining to the organizational designs of the medical platoons and sections located within the light and heavy divisions is found in FMs 8-10 and 8-10-4.

b. Capabilities. The medical platoon provides–

- Unit-1evel medical support (Echelon [Level] I).
- Advanced trauma management.
- Emergency medical treatment.
- Medical evacuation.
- Routine medical care (sick call).
- Limited preventive medicine assistance.
- Unit-level stress prevention and control assistance.
- Aidmen to maneuver companies.

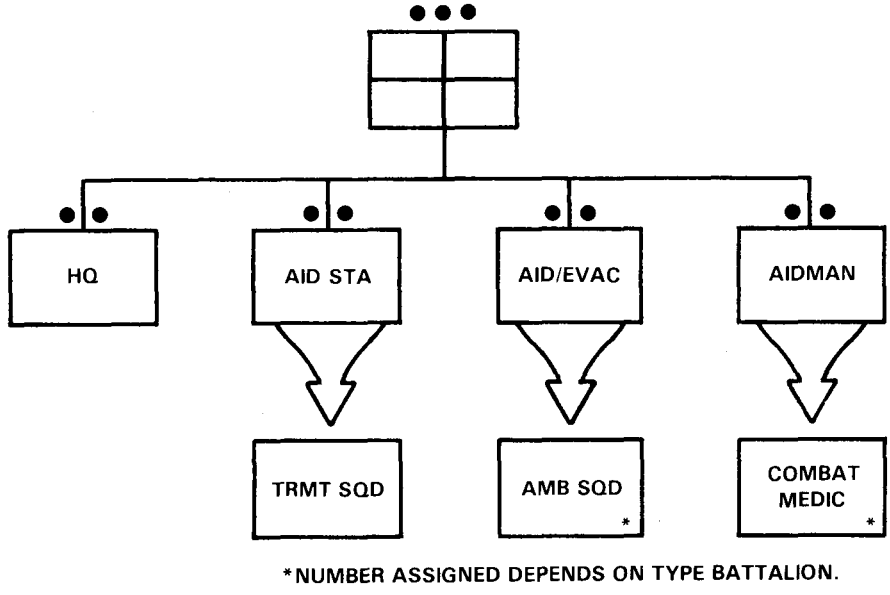

Figure 3-8. Medical platoon.

CHAPTER 4

COMMAND AND STAFF RESPONSIBILITIES OF THE BRIGADE SURGEON

Section I. FORWARD SUPPORT MEDICAL COMPANY COMMANDER'S RESPONSIBILITIES AND DUTIES

4-1. Commander's Responsibilities

The FSMC commander plans, directs, and supervises the operations and employment of the company. He is responsible for the training, discipline, billeting, and security of the company. The FSMC commander also serves as the surgeon to the supported ground maneuver brigade.

NOTE

In peacetime, the FSMC is usually commanded by an MS Officer, AOC 67B, Field Medical Assistant. When an MS officer commands the unit, HSS activities involving physician-related areas, such as patient treatment policies/procedures, are referred to a physician.

This section focuses on the major areas pertaining to the duties and responsibilities of the FSMC commander which require his attention and involvement. The commander must have a thorough knowledge of the FSMC organizational structure, capabilities, and mission. He needs to be familiar with each enlisted military occupational speciality code (MOSC) assigned to his unit. Additional information pertaining to the organizational structure, mission, and capabilities of the FSMC is found in the unit's TOE, FM 8-10, and FM 63-20. Additional information pertaining to AOC codes and MOSCs is found in Army Regulation (AR) 611-101 for officers and AR 611-201 for enlisted personnel.

4-2. Unit Readiness

Unit readiness must be a high priority for the FSMC commanders. The FSMC must maintain a high state of readiness at all times and be prepared for deployment on short notice. Elements of the company must be prepared for rapid, forward deployment to meet HSS requirements of the brigade. The readiness of the FSMC is monitored by higher headquarters through the unit status reporting system and the Command Health Report (see AR 40-5). The battalion headquarters must submit DA Form 2715-R on a monthly basis to its higher headquarters. Medical company commanders are usually not required to complete an official status report. However, many battalion commanders have their subordinate companies prepare this report in order to give the commander an appreciation for the system. The company commander will provide feeder reports for the unit status report to the battalion headquarters in accordance with command SOP. This report is completed IAW AR 220-1. The unit status rating is based on the following data:

- Personnel.
- Equipment on hand.
- Equipment capability/readiness.
- Training.

Training data provided in this report shows the current ability of the unit to perform its wartime mission. The standards against which the unit's training status is to be measured is its mission essential task list (METL). The commander determines the training level based on his knowledge of the proficiency of the unit in accomplishing METL tasks. The unit status report has an overall security classification of *confidential*. No information classified higher than confidential will be entered into this report.

4-3. Training

Training and training management are of major concern to the US Army in its efforts to maintain a highly trained, combat-effective force. Training consumes valuable time and major expenditures of

dollars. Because of time and money issues, it is evident that highly efficient training management is needed to achieve unit training readiness requirements.

a. Battle Focus. The unit's wartime missions are the source from which all training activities are derived. This is referred to as the battle focus. The objective of battle focus is a successful training program achievable by continually narrowing the focus to a reduced number of vital tasks essential to mission accomplishment. This is accomplished through the development of the METL.

b. Mission Essential Task List Development. The commander of each unit in the Army, from corps to company level, must develop a METL for his unit. Prior to developing the company's METL, the company commander obtains a copy of the battalion METL. He should review, then discuss, the battalion METL with the battalion commander or the battalion S3. The company commander then implements the METL development process for his unit. It is important that he involve all of his subordinate leaders in this process. Most importantly, the METL is driven by how the commander envisions battlefield requirements. The commander and unit leaders must actively anticipate worse-case scenarios and think through ideas when developing the company METL. The commander will develop his METL based on—

- Higher command guidance.
- Battle plans.
- The Army Training and Evaluation Program (ARTEP).
- Feedback from subordinates.
- Other sources of information.
  - Mission training plans (MTPs).
  - Capstone mission guidance.
  - Mobilization and deployment plans.
  - Division HSS plan.

The battalion commander is the approving authority for the company METL. After he approves the company METL, it becomes the source document for development of company training plans. The METL should only be changed when the company's mission changes. The company commander should also develop a condition statement and standards list for each METL. Definitive information pertaining to the development of the unit's METL is found in FMs 25-100 and 25-101.

c. The Army Training Management System. The Army Training Management System (ATMS) is a systematic approach used by all Army organizations to schedule, fund, and conduct military training. It is based on fundamental management techniques requiring input from every level of the organization. As with all things in the military, the commander is responsible for the conduct of all training within the command. The battalion commander is responsible for all the training in the battalion and the company commander is responsible for the training conducted in the company. The commander should be familiar with FM 25-4, FM 25-5, FM 25-100, FM 25-101, AR 350-1, and AR 350-41 prior to investing much time in providing training input. The ATMS is structured as a training management process and contains four basic management techniques.

(1) *Plan.* This area includes a review and update of the unit mission, review of the current training program, and determination of training requirements. The trainer must be able to access the training environment, set priorities, and schedule and prepare the training program.

(2) *Resource.* The training manager must be the resource for the training. He must allocate time, funds, supplies, facilities, and equipment. Without resourcing, the probability of success is very low.

(3) *Conduct.* The trainer must conduct the training as planned. Training must inform, challenge, and have value. It must be conducted using the task, condition, and standards specified; it must result in qualitative performance.

(4) *Feedback.* This is the key to a good training program. An evaluation of what is good or bad and what improvements might be required

must be accomplished. Knowing and understanding the evaluation process is extremely important to anyone responsible for training.

d. Types of Training. Military training tends to be a building block program with very few independent factors. Training is broken down into the following types:

(1) *Individual.* Those tasks and skills that require the individual soldier to function as a member of a team. These include weapons training, NBC training, common task training (CTT), and the skill qualification test (SQT). These are generally basic skills or military occupational specialty (MOS) skills which are specific in nature. The medical proficiency training (MPT) program was created to provide hospital-based clinical skills training and development to medical personnel assigned to TOE units. The individual training (MPT) should also support the unit METL. This individual training program allows an established number of medical personnel to rotate through the supporting hospital at set intervals for a period of 90 to 180 days. Officer professional development programs are conducted to promote tactical and technical proficiency for accomplishment of battlefield requirements.

(2) *Team.* These are team or squad tasks that are specifically directed toward mission accomplishment.

(3) *Leader.* These are skills required by leaders to accomplish assigned missions or designated missions.

(4) *Collective/unit.* This area brings together all of the above; it involves the training of mission essential tasks required to accomplish the overall unit mission. These tasks are found in the unit's METL and the standards are found in the ARTEP MTPs.

(5) *Multiechelon training.* This involves the simultaneous training of individuals, leaders, and units at each echelon in the organization during training events. Multiechelon is the most efficient and effective way of training and sustaining a diverse number of mission essential tasks within limited periods of training time.

e. Training Exercises. Training exercises are used to train and practice the performance of mission essential and collective tasks. Training exercises may include–

(1) *Situational training exercise.* The situational training exercise (STX) is a short, scenario-driven mission-oriented tactical exercise that provides a vehicle to train a group of closely related collective tasks.

(2) *Field training exercise.* The field training exercise (FTX) is a high-cost, high-overhead exercise conducted under simulated combat conditions in the field. It exercises command and control of all echelons in battle functions against actual or simulated opposing forces. The FTX provides a logical sequence for the performance of tasks which were previously trained during STXs. The METL and overall wartime mission provides the FTX orientation for the FSMC's training.

(3) *Tactical exercise without troops.* The tactical exercise without troops (TEWT) is a low-cost, low-overhead exercise conducted in the field on actual terrain suitable for training units for specific missions, It is used to train subordinate leaders and battle staff on terrain analysis, unit and weapon emplacement, and to plan the execution of the unit mission,

(4) *Command post exercise.* The command post exercise (CPX) is a medium-cost, medium-overhead exercise in which the forces are simulated and may be conducted from garrison locations or in between participating headquarters.

(5) *Deployment exercise.* The deployment exercise (DEPEX) is an exercise which provides training for individual soldiers, units, and support agencies in the tasks and procedures for deploying from home stations or installations to potential areas of hostilities.

(6) *Map exercise.* The map exercise (MAPEX) is a low-cost, low-overhead training exercise that portrays military situations on maps and overlays that may be supplemented with terrain model and sand tables. It enables commanders to train their staffs in performing essential integrating and control functions under simulated wartime conditions.

f. Training Plans and Schedule. Training plans involve long-range, short-range, and near-term

training plans. The Command Training Guidance (CTG) is published at division and brigade (or equivalent) levels to document the organization's long-range training plans. The FSMC commander will provide input to the battalion and the brigade on medical training requirements. He is responsible for developing the FSMC training schedule. The FSMC training schedule must support the battalion training schedule and meet the training objectives of the battalion commander. The FSMC commander provides input to the FSB S3 or the brigade S3 on any training events he wants on the training calendar. Training events are planned and scheduled to meet annual training requirements, to correct a known training deficiency, and to conduct new equipment training. Training events may be command-directed or be required sustainment and proficiency training to maintain unit readiness. *Remember, if it is not on the training calendar, you are going to have a problem making it happen.* Additional information pertaining to planning and the unit training schedule is found in FM 25-100 and FM 25-101. Some of the training events to consider are–

- Skill qualification test.
- Common task training for self-aid and buddy aid.
- Expert Field Medical Badge (EFMB) training and testing.
- Medical proficiency training.
- Emergency medical technician training.
- Cardiopulmonary resuscitation (CPR) training.
- Army Training and Evaluation Program.
- Operational readiness training (ORT).
- Command inspection (medical).
- Patient play activities.
- Division/brigade FTXs.
- Installation support cycles.

4-4. Maintenance

Maintenance requirements in the FSMC involve vehicle and equipment maintenance and medical maintenance. The commander has the responsibility for directing all unit-level maintenance operations IAW DA Pam 738-750.

a. Vehicle and Equipment Maintenance. Vehicle and equipment maintenance is supervised by the commander and leaders within the FSMC and consists mainly of operator maintenance and PMCS (see FM 43-5). Organizational and direct support maintenance of FSMCs in the airborne and air assault divisions are provided by the battalion headquarters and/or the supporting maintenance battalion. In those divisions under the MSB/FSB design, the organizational maintenance is organic to the FSMC, and direct support maintenance is provided by the maintenance company which is organic to the FSB. The commander's maintenance activities will involve—

- Supervising implementation of PMCS for compliance with SOP and battalion commander's guidance.
- Identifying company operational levels by reviewing vehicle and equipment status reports.
- Identifying current or anticipated maintenance problems.
- Coordinating resolution of maintenance problems with the supporting maintenance element.
- Approving battle damage assessment and repair (BDAR) procedures (see Chapter 5, paragraph 5-10).
- Preparing materiel condition status report.
- Inspecting vehicles, weapons, and equipment to ensure proper operator maintenance IAW SOP, TMs, or FSB commander's guidance.
- Requesting on-site repairs.

- Checking vehicle and generator log books for appropriate entries.

- Developing and updating the maintenance SOP which delineates the maintenance responsibilities and requirements for FSMC.

b. Medical Maintenance. The medical company is responsible for operator maintenance and PMCS. Unit-level medical maintenance support is provided by the DMSO. Definitive information pertaining to medical maintenance was provided in Chapter 1.

4-5. Unit Supply Operations

Unit supply operations involve both general and medical supply activities within the FSMC. The FSMC commander has the overall responsibility for supervising both. The supply elements of the company provide general supply and armorer support for the FSMC. They provide routine and emergency medical resupply for the FSMC and all supported medical elements within the brigade AO. This element is typically staffed with a unit supply sergeant, a medical supply specialist, and an armorer. Major activities in conducting unit supply operations involve property accountability, security, stock levels, quality control, and resupply.

a. Property Accountability. Department of the Army policy requires the commander of a unit to be responsible for all property assigned to that unit. At unit level, property accountability is called hand-receipt accountability. This requires accurate record keeping of all unit property authorized by modification table of organization and equipment (MTOE), common table of allowances (CTA), and/or their guidance. Hand receipts and property are managed by a property book officer (PBO) appointed at the division/brigade level. The FSMC commander could also be the PBO for the unit but is usually a hand-receipt holder. Regardless of whether he is the PBO or not, the commander has the command responsibility for all unit property, whether he has signed a hand receipt for it or not. The commander subhand receipts organization and installation equipment and property to identify section and individual responsibility. Additional information pertaining to property accountability is found in AR 710-2, AR 40-61, DA Pam 710-2-1, FM 10-14, and FM 10-14-1.

b. Security. Security procedures for safeguarding government property are established IAW AR 190-51. The commander must personally supervise the physical security of unit property. In the field where facilities are not adequate, the commander may be required to use his own initiatives. Some of the following methods may be employed by the commander to maintain security of unit property, supplies, and equipment:

- Control access to storage areas.

- Maintain key control.

- Establish procedures in the SOP for controlling expendable supplies.

- Establish procedures in the SOP for controlling, safeguarding, and accounting for controlled medical items such as some pharmaceuticals, needles, syringes, and high-dollar-value items.

- Mark unit supplies and equipment.

- Include measures in the unit SOP for control of property issued to unit personnel.

- Ensure that all property accountability records are kept up to date.

- Establish procedures in the SOP which provide for security of the unit supply area.

c. Stock Levels. Stock levels for organizational and medical supplies are maintained to meet basic load and unit readiness requirements. Required inventories are conducted at various times and intervals throughout the year to determine stock levels and the serviceability of the stock on hand. Additional information pertaining to inventory requirements for supplies and equipment is found in DA Pam 710-2-1. Medical supply stock levels consist of those consumable medical materiels that are components of medical sets, kits, and outfits (SKO) and as authorized by CTA 8-100 and division commander's guidance. These SKO are authorized by the MTOE for medical companies and sections within the division. The SKO are authorized in sufficient quantities to support combat operations for 3 to 5 days.

d. Quality Control. Quality control measures are necessary to prevent costly disposal and replenishment actions. Approximately 36 percent of the medical materiels found in the treatment platoon are potency dated. Each unit having SKO must maintain a potency-date file using a DA Form 4998-R for each shelf-life item of materiel IAW AR 40-61. Items with sensitive or restricted codes and those requiring special storage are included. Early awareness and actions to rotate stock to active patient care areas (MTFs) can save considerable dollars and ensure continued readiness of the set. When the FSMC is performing its wartime mission, potency dates are checked and stock is rotated to facilitate the use of potency-dated items prior to their expiration dates. Quality control procedures must also ensure that all items are stored IAW appropriate TM, manufacturers' instructions, and unit SOP. Medical materiels must be stored properly if they are to maintain their effectiveness and shelf life. Additional information pertaining to quality control procedures is provided in AR 40-61.

e. Resupply. Resupply of nonmedical supply items is requested from the FSB Supply Officer (S4). In those units which are not under an FSB/MSB design, the FSMC requests resupply from the medical battalion S4, or when deployed forward in a tactical environment, the FSMC requests resupply through the FASCO from the supporting element of the supply and transportation battalion. Resupply of medical items is requested from the DMSO. The FSMC is responsible, as previously stated, for providing emergency resupply to all medical elements operating in the supported brigade AO. In combat, supply point distribution is used to move medical supplies to the FSMC in the BSA. From this point, medical supplies are carried forward using ground or air ambulance or any vehicles that are going forward. Resupply of controlled substances is accomplished IAW the DMSO and unit SOP.

4-6. Personnel and Administration Functions

The personnel and administration (P&A) functions for the battalion are centralized at the Personnel Administration Center (PAC). The Adjutant (S1) has overall responsibility for P&A functions. The PAC operates the personnel management program, takes or secures actions on personnel matters, and furnishes personnel information and guidance to designated commanders and staff. The PAC also reports to higher headquarters and provides information required on such matters as personnel losses and replacement requirements. The PAC accomplishes as many personnel actions as possible to reduce personnel administration at unit level. The PAC exists to increase the efficiency of the battalion and to relieve unit commanders of their administrative burden. However, it is neither intended nor designed to interfere in any way with unit commanders' authority and prerogatives.

a. Forward Support Medical Company Commanders' Personnel and Administration Responsibilities. The company commander is the primary P&A manager for the unit, assisted by the medical operations officer (executive officer [XO]) and the first sergeant. Specifically, the commander is responsible for–

- Using assigned personnel properly according to MOS, training, experience, and the desire and needs of the organization.

- Reporting all status changes to the PAC promptly.

- Requesting reclassification of soldiers who are physically unable to perform in their primary MOS, better qualified in another MOS, or inefficient.

- Authenticating administrative documents and actions on personnel actions and forwarding them IAW prescribed procedures.

- Enforcing discipline within their units (see Appendix B).

b. Company First Sergeant. The company first sergeant is normally responsible for the following P&A functions:

- Overseeing company-level administration.

- Advising the company commander of troop assignments, reassignments, promotions, and other personnel actions.

- Supervising replacement activities to include the indoctrination of newly assigned personnel.

- Verifying and monitoring strength and personnel accounting reports to include battle roster change reports, casualty feeder reports, and personnel daily summary.

c. Additional Information. Additional information pertaining to P&A operations is found in FM 12-6, FM 101-5, and DA Pamphlets 600-8 and 600-8-1.

4-7. Graves Registration Responsibilities

All commanders are responsible for unit graves registration (GRREG) and proper disposition of remains. Selected unit personnel should be trained on unit-level GRREG tasks to ensure proper handling of remains and the deceased's personal effects. The FSB has one GRRE G-trained soldier assigned to the headquarters of the FSB supply company. He is available to train all FSB personnel on GRREG procedures. Additionally, the medical company, by the very nature of its HSS mission, will necessitate continuous interface with GRREG personnel. The headquarters section, medical company, is responsible for coordinating disposition of remains (either medical company personnel or patients) and personal effects to the GRREG collection point. A temporary morgue area may be required at the medical company to hold remains (patients and unit personnel only) while waiting for transportation to the GRREG collection point. If established, this temporary morgue area must be placed away from and out of sight of patient treatment and holding areas. Remains of deceased unit personnel or patients that are placed in the temporary morgue area must have a completed (reviewed and signed by an MC officer) Field Medical Card (FMC) attached. An exception to this procedure may be made during a mass casualty situation. The remains may be tagged IAW unit SOP and the FMC completed when time permits. Coordination for transporting remains to the GRREG collection point should be accomplished without delay. When GRREG collection point personnel are operating in the BSA, they must see that all remains received have a completed FMC. When remains arrive at the GRREG collection point without an FMC or the card is not signed by a Medical Corps officer, they will coordinate with the medical company as discussed in FM 10-63. Graves registration personnel will transport the remains to a medical officer for completion of the FMC or have the medical officer come to the GRREG collection point. The FMC should be protected from the weather and body fluids whenever possible. See FMs 10-63, 10-63-1, and 63-20 for definitive information.

NOTE

Governing Principles for Medical Disposition of Deceased Personnel

1. Deceased personnel are segregated from other casualties.
2. The dead, as determined by the senior medical authority, are not evacuated with other casualties. ADD Form 1380 should be initiated and attached to the remains, if possible.
3. Casualties requiring treatment are not placed in the same vehicle with deceased personnel.
4. Medical evacuation resources should not be used to transport deceased personnel.
5. All deceased personnel should have an FMC, signed by a medical officer, before being transported from the GRREG collection point operating in forward areas (BSA).

Section II. BRIGADE SURGEON'S RESPONSIBILITIES, STAFF ACTIVITIES, AND RELATIONSHIPS

4-8. Brigade Surgeon's Responsibilities

The aviation brigade is the only brigade that has a brigade surgeon assigned to its headquarters. (See Appendix C for information pertaining to aviation medicine.) In those divisions under the MSB/FSB design and those divisions with a medical battalion, the maneuver brigade surgeon's responsibilities are

performed by the FSMC commander. In the armored cavalry regiment, the brigade surgeon is called the regimental surgeon, In the remainder of this text, the term *brigade surgeon* is used, but information provided also applies to the regimental surgeon. The brigade surgeon is normally a Major with AOC 62B (Field Surgeon). This officer is tasked with both command and staff responsibilities. He is a commander, a physician, and a special staff officer at both battalion and brigade levels as a medical technical advisor. His consolidated duties and responsibilities are focused toward ensuring that HSS is available and adequate to support the mission of the brigade. His knowledge of the functions and responsibilities of each staff element in the brigade and supporting CSS unit or elements is essential for proper staff interaction and coordination. Additional information pertaining to command and staff functions and estimates is provided in Appendix D.

4-9. Maneuver Brigade Staff and Brigade Surgeon

The maneuver brigade headquarters was previously discussed in Chapter 1. The brigade staff includes the brigade XO, brigade S1, brigade S2 (Intelligence Officer), brigade S3, brigade S4, and the brigade S5 (Civil Affairs Officer) when authorized. The brigade surgeon is a special staff officer. This paragraph provides general information pertaining to the responsibilities of the brigade staff and the brigade surgeon. Additional information pertaining to the staff is found in FM 101-5.

a. Brigade Commander and Staff

(1) *Brigade commander.* The brigade commander plans, directs, and supervises the brigade's activities, and prescribes policy, procedures, missions, and standards.

(2) *Brigade executive officer.* The XO is the principal assistant to the brigade commander. He is instructed by the commander to supervise and coordinate the functions of the brigade staff.

(3) *Brigade S1.* The S1 functions as the commander's principal assistant on matters concerning human resources and personnel matters. He exercises general staff responsibilities for monitoring, assessing, and ensuring personnel service facilities, policies, and procedures that support soldier readiness. He exercises command policy and plans based on input from the coordinating and special staff. He is concerned with health services such as field medical support, treatment and prevention of disease, mental health, dental, and other essential services. He projects casualty estimates and coordinates with the brigade surgeon on tactical medical intelligence matters and replacement requirements. The S1 is concerned with the consequences of HSS on the soldier. He is responsible for operational and technical control of the administrative support function. He provides information to the surgeon for formulation of the HSS plan. Additional information pertaining to the functions of the S1 may be found in Training Circular (TC) 12-17 and FM 12-6.

(4) *Brigade S2.* The S2 advises the commander on all intelligence matters. He prepares and disseminates intelligence estimates. He develops the initial intelligence preparation of battlefield (IPB). The IPB provides detailed information on the enemy, weather, and terrain. He disseminates IPB products such as an analysis of AO. He recommends priority intelligence requirements to the commander based on information and recommendations of other staff officers. He plans and supervises the use of civilian labor. He develops, plans, and coordinates all reconnaissance assets with the S3 to include ground-based signal intelligence assets. He prepares counterintelligence estimates. He plans and supervises the implementation of counterintelligence measures to support all operations.

(5) *Brigade S3.* The brigade S3 advises the commander on combat and CS matters and on organization and training. Based on the commander's guidance, and input from other staff officers, he prepares operation estimates and develops operation plans (OPLANs). He plans and supervises tactical troop movement. He establishes priorities for communications to support the tactical operations. He prepares and supervises the execution of the training programs. The S3 is concerned with the operational conduct of training and integration of HSS in operation plans and orders.

(6) *Brigade S4.* The brigade S4 maintains the status of and advises the commander

on CSS units and systems. He supervises transportation resources and controls nontactical movement. He determines requirements for supply, rations transportation, maintenance, and field services. Based on the commander's guidance and information from other staff officers, he prepares logistics estimates. He provides overall supervision for supply, transportation, and maintenance activities within the brigade. The S4 is concerned with planning, coordinating, and integrating HSS functions with other CSS. He may, as directed by the brigade commander, provide C2 for the BSA.

(7) *Brigade S5.* The brigade S5, when authorized, advises and makes recommendation to the brigade commander pertaining to civil-military operations (CMO). He coordinates host-nation support. He provides liaison for procurement of civilian medical facilities. He provides the S1 with information pertaining to requirements for evacuation or hospitalization of civilians. He provides information to all staff elements pertaining to the civilian population. He coordinates the use of captured enemy supplies and materiels. He advises the commander on the impact of military operations on the civilian population.

b. Surgeons Interaction with the Brigade Staff. The brigade surgeon coordinates his brigade staff initiatives with the FSB commander and staff or with the FASCO depending on his organizational assignment. He is responsible for reviewing all brigade OPLANs and contingency plans to identify potential medical hazards associated with geographical locations and climatic conditions. He keeps the brigade commander informed on the medical aspects of the brigade operations. This is accomplished through the FASCO or through the FSB commander, or the surgeon may provide periodic update/briefings (see Appendix E) to the brigade commander. Some issues may require coordination with the brigade staff members. The surgeon should have an understanding of how the brigade staff actions are accomplished. Listed below are points of contact that will assist the surgeon in influencing HSS action.

(1) *The S1.* The surgeon normally coordinates all staff action through the S1. The S1 provides the best link to the command group. The S1 ensures that the command group stays informed on the surgeon's issues and coordinates face-to-face meetings when required.

(2) *The S2.* Early contact must be made with the S2 to verify the surgeon's clearance and access to meetings and information. The S2 can provide the surgeon with current threat intelligence, area studies, and a myriad of other information. Examples of other information may include medical intelligence such as–

- Disease resulting from endemic or epidemic pathogens.
- Suspected enemy biological agent employment.

If the surgeon is assigned to an FSB, the FSB S2/S3 can provide this information. Additional information pertaining to medical intelligence is found in FM 8-10-8.

(3) *The S3.* The S3 can provide the surgeon with access to information on current and future operations. The surgeon, through the S3, can influence required medical training programs and medical support operations.

(4) *Operations NCO.* The operations NCO is normally a staff sergeant major or master sergeant with whom the surgeon can communicate when the S3 is not available. This NCO is very capable and should be able to answer most of the surgeon's questions.

(5) *The S4.* The S4 maintains the administrative/logistical overlay for all operations. He ensures that all medical activity locations are plotted on this overlay. He manages traffic entering or leaving main supply routes.

(6) *The S5.* In combat operations, the S5, when authorized, can provide assistance to the surgeon. He can coordinate host-nation support activities and keep the surgeon aware of refugee and straggler concentrations. He may also request and coordinate medical support required to enhance operations with the local populace.

(7) *Communications-Electronics officer (if assigned).* The Communications-Electronics (CE) officer controls all communications assets of the brigade. He can provide assistance on coordination of communication with supporting units and other units participating in an operation.

c. Synchronization of Health Service Support. The brigade surgeon is responsible for synchronizing HSS for the brigade. Specific responsibilities include–

- Ensuring implementation of the health service section of the division SOP.

- Determining the allocation of HSS resources within the brigade.

- Supervising the technical training of medical personnel and the combat lifesaver program in the brigade area.

- Developing and monitoring the evacuation plan (ground and air) which supports the brigade's maneuver plan. This includes recommending ambulance exchange point (AXP) locations.

- Writing the HSS portion of the brigade SOP, OPLANs, and operation orders (OPORDs).

- Monitoring requests for aeromedical evacuation from supported units.

- Monitoring the health of the command and advising the commander on measures to counter the medical threat.

- Monitoring and assisting units with their mild/moderate BF cases and determining capability to restore battle fatigue casualties (BFCs) within the brigade's AO.

- Informing the division surgeon, DMOC, of the brigade's HSS situation.

- Supervising corps medical units within the brigade's AO when directed.

- Exercising technical supervision of subordinate battalion surgeons.

- Assuming technical supervision of PAs organic to subordinate units in the absence of their assigned physician.

- Advising PAs assigned to artillery and engineer battalions, as required.

NOTE

The HSS commander and staff must be proactive; they must anticipate future tactical operations and formulate sound HSS plans to support those operations in advance. The commander and staff have failed if they react to tactical operations as opposed to anticipating such operations.

4-10. Brigade Surgeon's (Forward Support Medical Company Commander) Interaction with Medical Battalion Headquarters Staff

Key members of the medical battalion headquarters staff are members of the command section. The battalion command section consists of the battalion commander and his immediate staff. These personnel supervise functions of the organizational elements of the battalion headquarters. Additional information pertaining to the overall responsibilities of each of the headquarters elements is found in FM 8-10.

a. Medical Battalion Commander and Staff.

(1) *Battalion commander (division surgeon).* The battalion commander plans, directs, and supervises battalion activities, and prescribes policy, procedures, missions, and standards. The duties and responsibilities of the division surgeon are discussed in Chapter 5.

(2) *Battalion executive officer.* The XO is the principal assistant to the battalion commander. He supervises and coordinates the functions of the battalion staff. He develops the battalion base defense plan and coordinates with the base cluster commander.

(3) *Battalion S1.* The S1 advises the commander on administrative and personnel matters. He develops and issues instructions for submission of records and reports. The S1 also authenticates and supervises the preparation and distribution of orders and instructions, and participates in the development of OPORDs.

(4) *Battalion S2/S3.* The S2/S3 is the operations, intelligence, and training officer. This

officer advises and assists the battalion commander in planning and coordinating battalion operations. He supervises planning, operations, security, NBC intelligence, communications, and training activities of the battalion. He also authenticates and supervises the preparation and distribution of OPORDs.

(5) *Battalion S4.* The S4 directs the logistical activities of the battalion and advises and assists the battalion commander in all matters pertaining to logistics. He also coordinates with the S3 in planning and implementing damage control measures. The duties and functions of the S4 are discussed in detail in FM 10-14-2.

(6) *Command sergeant major.* The command sergeant major (CSM) is the battalion commander's principal enlisted assistant. He maintains liaison between the commander and first sergeants of subordinate units. The CSM is the battalion commander's chief advisor on battalion individual training matters. The CSM advises and assists NCOs in accomplishing their assigned missions. He also assists the commander in the inspection of subordinate units.

b. Brigade Surgeon's (Forward Support Medical Company Commander) Interaction with the Forward Area Support Coordinator. In those divisions with a medical battalion, the brigade surgeon (FSMC commander) commands a company that is organic to the medical battalion. When the FSMC is deployed forward in support of a maneuver brigade, the brigade surgeon/FSMC commander continuously interacts with the FASCO on HSS requirements in the BSA. The FASCO directs all CSS operations, but coordination for both technical and administrative matters continues between the FSMC and the medical battalion headquarters. This medical channel is designed to enhance reaction time of both the battalion headquarters and the FSMC. The FASCO coordinates all formal requests for assistance or medical resupply. The medical battalion headquarters coordinates HSS requirements through the FASCO with the medical company. Interface between the brigade surgeon and the medical battalion and the FASCO may include–

- Health service support operations–S2/S3.
- Ambulance exchange points–S2/S3.
- Corps-level medical elements in direct support–S2/S3.
- Emergency Class VIII resupply/medical equipment replacement–S4/DMSO.
- Tactical situation/threat update–S2/S3.
- Communications–S2/S3.
- Status report on HSS elements–Sl, S2/S3, S4, DMSO.
- Reinforcement/reconstitution of medical elements–Sl, S2/S3.
- Preventive medicine-S2/S3, preventive medicine section.
- Combat stress control operations–S2/S3, mental health section.
- Nuclear, biological, and chemical operations–S2/S3, S4.
- Brigade Army airspace command and control (A2C2) (when appropriate)–S2/S3.

4-11. Forward Area Support Coordination Officer

The FASCO is assigned to the security, plans, and operations office of the DISCOM HHC in the airborne and air assault divisions. There are three FASCOs, one for each of the maneuver brigades. The FASCO coordinates the efforts of the FAST. The FAST is task-organized to meet the needs of the brigade. The composition of the FAST changes by augmentation of other DISCOM or corps support command (COSCOM) elements to meet varying needs of the brigade and other supported units. The FAST normally consists of an FASCO, a forward supply company of the supply and transport battalion, a forward maintenance company of the maintenance battalion, and an FSMC of the medical battalion. The FASCO is assisted by the commander and leaders of the FAST units. The FASCO coordinates logistic support missions between the

brigade XO, or the S4, and DISCOM elements operating in the BSA. Additional information pertaining to the FASCO is found in FM 63-2.

4-12. Forward Support Battalion Staff

The FSB headquarters has five sections: command, PAC/Sl, S2/S3, support operations, and S4. The command section is the command element and is made up of those staff officers that supervise the functions of the major organizational elements. Additional information pertaining to the FSB headquarters and headquarters detachment (HHD) is found in FM 63-20.

a. Forward Support Battalion Commander and Staff.

(1) *Forward support battalion commander.* The FSB commander may be either a quartermaster, transportation, ordnance, or MS officer. Working through the command section, he plans, directs, and supervises battalion activities and prescribes policies, procedures, missions, and standards.

(2) *Battalion executive officer.* The XO is the principal assistant to the battalion commander. He supervises and coordinates the functions of the battalion staff as directed by the commander.

(3) *Battalion S1.* The battalion S1 is the primary staff officer for the commander on all matters concerning human resources. He advises the commander on administrative personnel matters. The S1 is assisted by and directs the activities of the PAC section.

(4) *Battalion S2/S3.* The battalion S2/S3 is the plans, operations, intelligence, security, and training officer. He is responsible for internal FSB operations. The S2/S3 advises and assists the FSB commander in planning, coordinating, and supervising the communications, operations, training, security, and intelligence functions of the battalion. The S2/S3 is assisted by the S2/S3 section which has two branches–plans and operations branch and communications branch.

(5) *Support operations officer.* The support operations officer coordinates and provides technical supervision for the FSB CSS mission. This mission includes direct support supply, field service, intermediate direct support maintenance (IDSM) HSS, and limited transportation functions. In this capacity, the support operations officer advises the commander on requirements versus available assets. The support operations officer must ensure that CSS to supported units remains at a level consistent with the type of tactical operations being conducted. The support operations officer is assisted by the support operations section whose activities he directs. For HSS, the support operations section is assisted by the brigade surgeon (medical company commander) who provides input to the service support annex on HSS.

(6) *Battalion S4.* The battalion S4 officer provides technical supervision and assistance for unit-level support within the battalion. He is responsible for preparing the logistics estimates and making recommendations to the commander on internal logistics activities. He also plans the service support annex to the battalion OPORD/OPLAN. The S4 is assisted by the S4 section.

b. The Brigade Surgeon's (Forward Support Medical Company Commander) Interaction with the Forward Support Battalion Staff. The brigade surgeon continuously interacts with the FSB staff on HSS requirements in the BSA and taskings from the DMOC. The brigade surgeon (FSMC commander) maintains technical channels of communication with the division surgeon and DMOC for coordinating HSS activities. The DMOC will utilize command channels through the FSB headquarters when tasking the FSMC or elements of the FSMC. The brigade surgeon interacts with the FSB staff on the following:

- Health service support operations–S2/S3, support operations section.
- Ambulance exchange points–support operations section.
- Corps level medical support in direct support–S1, support operations section.
- Emergency Class VIII resupply/medical equipment replacement–support operations section.

- Tactical situation/threat update–S2/S3 (S2 operations cell).

- Communications–S2/S3 (communications branch).

- Status reports on HSS elements–support operations section.

- Reinforcement and reconstitution of medical elements–support operations section, S1, S4.

- Preventive medicine–support operations section.

- Combat stress control operations–support operations section, S4, S1.

- Nuclear, biological, chemical, and directed-energy operations–support operations section.

- Brigade A2C2–support operations section.

- Tactical SOPs–S1.

- Logistics requirements (non-medical)–S4.

- Operation order/OPLAN–support operations section.

- Personnel estimates for casualties and replacement requirements–Sl.

4-13. Separate Brigade and Regimental Surgeons

The separate brigade or regimental surgeon's primary responsibility is to ensure that HSS is available and adequate to support the mission of the brigade or armored cavalry regiment (ACR). The separate brigade/regimental surgeon is the commander of the medical company/troop assigned to provide HSS. The surgeon provides the commander with information regarding the medical aspects of combat effectiveness within the brigade or ACR and performs staff functions similar to those of the division surgeon. In addition, this surgeon–

- Ensures the implementation of the health service section of the division or corps SOP.

- Recommends the allocation of medical resources within the brigade or ACR.

- Exercises direct supervision over the technical training of medical personnel assigned to brigade or ACR units and manages the combat lifesaver program.

- Determines procedures, techniques, and limitations in the conduct of routine medical care, EMT, and ATM procedures.

- Monitors the health of the command and advises the commander on measures to counter the medical threat.

- Monitors requests for aeromedical evacuation originating in units subordinate to the brigade.

- Ensures, through coordination with appropriate headquarters, that the brigade and its subordinate units receive adequate HSS for their assigned missions.

- Provides the COSCOM surgeon, in the case of a separate brigade or ACR, with information concerning the brigade's or ACR'S plans and operations for HSS of attached units.

- Assumes OPCON (when directed) of augmentation medical units.

- Supervises activities of subordinate battalion or squadron surgeons.

- Assumes technical supervision of PAs organic to subordinate units in the absence of their assigned physicians.

- Advises and/or supervises all division CS and CSS medical elements operating within the brigade's AO as required.

- Advises regarding and oversees the plans of the battalions or squadrons for preventing and managing stress and BFCs.

- Coordinates technical supervision of enlisted mental health personnel in the medical company by mental health officers of other commands.

4-14. Division Medical Operations Center

The DMOC's medical operations branch coordinates with the FSB medical company through medical channels pertaining to HSS operations. The DMOC will task elements of the FSB medical company through command channels. Additional information pertaining to the DMOC is found in FM 8-10-3. The FSB medical company will interface with the DMOC on–

- Health service support operations.
- Ambulance exchange points.
- Corps-level medical elements supporting the FSMC.
- Emergency Class VIII resupply and medical equipment replacement.
- Tactical situation and threat medical intelligence information update.
- Communications.
- Status reports on HSS elements.
- Reinforcement/reconstitution of medical elements.
- Preventive medicine.
- Combat stress control operations.
- Nuclear, biological, chemical. and directed-energy operations directed against supported division forces.
- Brigade A2C2 (when appropriate).

CHAPTER 5

COMMAND AND STAFF RESPONSIBILITIES OF THE DIVISION SURGEON

Section I. COMMAND RESPONSIBILITIES

5-1. Assignments

In airborne and air assault divisions, the division surgeon is also the medical battalion commander.

NOTE

In peacetime, the medical battalion commander's position is usually filled by an MS officer, AOC 67 series. When an MS officer commands the battalion, HSS activities involving physician-related areas, such as patient treatment policies and procedures, are referred to a physician.

This section addresses the medical commander's duties and responsibilities, his interactions with the battalion staff and subordinate units, and his interface and coordination with division, DISCOM, and supporting corps medical staff elements.

5-2. Responsibilities

The battalion commander plans, directs, and supervises battalion activities. He is responsible for synchronizing HSS operations for the division. He monitors and directs HSS operations to achieve maximum use of division and corps medical elements in support of the division. He is assisted by the medical battalion headquarters staff. Responsibilities of the battalion commander include–

- Commanding and controlling battalion medical units.
- Planning and providing Echelons (Levels) I and II HSS to include–
  - Identifying HSS requirements.
  - Tailoring and prioritizing medical resources to meet HSS and tactical requirements.
  - Providing medical logistics and medical maintenance support.
  - Coordinating and directing medical evacuation operations.
  - Providing divisionwide support activities pertaining to preventive medicine, mental health, and optometry services.
  - Providing input to the division HSS annex.
  - Ensuring division SOPS, plans, policies, and procedures for HSS are properly executed.
  - Developing the medical battalion METL IAW FM 25-100, FM 25-101, and guidance from the division and DISCOM commanders.
  - Monitoring unit readiness to ensure the unit maintains the appropriate state of readiness for rapid deployment and wartime contingencies.
  - Advising, assisting, and mentoring the medical company commander and battalion-level medical platoon or section leaders.

5-3. Staff Supervision

The battalion commander's principal assistant is the battalion XO. The XO is the key to successful operations at the battalion headquarters level. The battalion commander may delegate staff supervision authority to the XO who will then supervise and coordinate all battalion staff functions.

5-4. Division Support Command Staff Interface

The relationship between the medical battalion commander and the DISCOM staff is like that between any subordinate commander and his higher headquarters staff. The medical battalion commander directs HSS efforts through his battalion staff in coordination with the DISCOM staff

elements. He reacts to tasking and directives from the DISCOM staff elements. The commander and his medical battalion staff proactively provide HSS input to the DISCOM OPLAN and OPORD, and coordinate with the appropriate DISCOM staff element for implementation of HSS operations as required. Successful HSS operations require continuous coordination between the staff elements of the DISCOM headquarters and medical battalion.

NOTE

The HSS commander and staff must be proactive; they must anticipate future tactical operations and formulate sound HSS plans to support those operations in advance. The commander and staff have failed if they react to tactical operations as opposed to anticipating such operations.

5-5. Division Staff Interface

The relationship between the medical battalion commander and the division staff normally occurs through the DISCOM headquarters. Some division operations may require the medical battalion commander, in his role as division surgeon, to interface directly with division staff elements. Casualty estimates, CMO, and host-nation support are some examples where direct interface may be required. (Appendix F provides additional information pertaining to health service estimates.) In most cases, the division surgeon/battalion commander interfaces with division staff elements through the division G1 (Assistant Chief of Staff [Personnel]). See paragraph 5-13 for additional information pertaining to the division surgeon's interactions with division staff elements.

5-6. Corps Medical Staff Interface

Corps interface will again occur through the normal command channel, or in case of specific medical technical areas, directly between the medical battalion and supporting corps medical units. Additional information pertaining to corps medical staff interface is found in FM 8-10-3.

5-7. Training Management

Training is one of the most important responsibilities the medical battalion commander has in peacetime because it prepares his battalion to accomplish its critical wartime mission. A difficult task for the battalion commander is preparing and conducting unit training. Training requirements of particular importance to the commander involve–

- Battle focus. Battle focus was discussed in Chapter 4.

- Mission essential task list development. Development of company METL was also discussed in Chapter 4. The key to the battalion training program is the development of a battalion METL. The battalion METL must support and complement the DISCOM and division METLs. The battalion METL is the base document used in developing the company METL. The same considerations and factors discussed in Chapter 4 pertaining to development of the company METL are used to develop the battalion METL. The battalion commander should involve headquarters staff in developing the battalion METL. Once the DISCOM commander approves the battalion METL, it becomes the source document from which training plans are developed. It should be changed only when the battalion's mission changes.

- Battalion training schedule. The battalion produces long-range (one year), short-range (three months), and near-term (one week) training schedules. The weekly training schedules are normally provided for each company.

5-8. Unit Readiness

Readiness is the ability of a unit to perform as designed. It is a composite of various factors to include equipment, personnel, and training. A unit's ability to perform its mission is directly correlated to these areas. Indicators of the unit's readiness can be found by reviewing equipment maintenance reports, Inspector General reports, ARTEP results, and emergency deployment readiness exercise results. Commanders should familiarize themselves with the above programs. The Army gauges the status of units via the unit status report. This readiness indicator is governed by AR 220-1. The

battalion must submit a DA Form 2715-R on a monthly basis to its higher headquarters. This report is based on personnel, equipment, and training data. Normally, a formal briefing is provided by the battalion commander to the DISCOM commander each month. The DISCOM commander will brief the division commander.

NOTE

Normally, medical equipment and supplies are reported subjectively (for example, in the Commander's Comments). The unit needs to be cognizant of the real medical capabilities.

5-9. Personnel and Administration Functions

Personnel functions for the battalion are provided by the PAC under the supervision of the battalion S1. The battalion commander should be updated weekly on P&A matters to include significant problem areas and possible solutions. The S1 is responsible for supervising all administrative activities for the battalion. These activities include supervision of correspondence, personnel liaison, mail distribution, and dissemination of command information.

5-10. Battalion Maintenance (Medical and Nonmedical)

An effective maintenance program is essential to a unit's ability to perform its mission. The most important element in any unit maintenance program is the equipment operator. He must be familiar with his equipment and be able to maintain it. The medical battalion commander and subordinate medical company commanders must ensure operators are properly trained. Maintenance subject areas and activities include the following:

- Levels of maintenance. Maintenance operations are divided into three levels to efficiently coordinate them with other military operations.

- Unit-level maintenance. Unit-level maintenance is similar to the maintenance applied to privately owned vehicles. It focuses primarily on minor repairs, adjustments, and replacing minor components, such as starters, generators, brakes, and spark plugs. The vehicle operator or crew with the aid of unit mechanics perform unit maintenance. The battalion commander will primarily be involved with this level of maintenance (see FM 43-5).

NOTE

Some light infantry divisions (LIDs) have been reorganized so that only Headquarters and A Company can provide unit-level (organizational) maintenance. The three line forward support medical companies receive unit-level (organizational) maintenance from the forward deployed maintenance battalion elements. Check the local unit's MTOE to see how unit-level (organizational) maintenance is provided.

- Intermediate-level maintenance. The intermediate level of maintenance has two orientations, direct support and general support. The direct support maintenance units perform repair and return-to-the-user functions. They are organic to the division and focus on far forward support. The direct support maintenance units perform repairs beyond the capability of unit maintenance. General support maintenance units perform major repairs and overhaul. Items repaired at the general support level are returned to the supply system. General support maintenance does not perform a repair and return-to-the-user function.

- Depot maintenance. Depot maintenance is performed at fixed facilities in CONUS and major overseas areas. Depot maintenance is characterized by overhaul and rebuild functions.

- Maintenance terms and functions. To understand maintenance, you must first become familiar with terms used to describe various maintenance functions.

- Prescribed load list (PLL). This is the unit's repair parts stockage. It is composed of an authorized stockage list (ASL) which is a list of parts for which sufficient need has been historically established to justify their stockage. Command supported items are parts which the unit commander has directed be stocked.

- Preventive maintenance checks and services. The Army's preventive maintenance systems consist of periodic checks (before, during, and after operations; daily, weekly, monthly) and scheduled services. The operator's technical manual for each vehicle and piece of medical equipment lists the PMCS to be conducted and their frequency. (See TM 8-6500-001-10 for reparable medical equipment.)

- Cannibalization. This is the authized removal of serviceable parts from irreparable equipment by maintenance units.

- Controlled exchange. Controlled exchange is the removal of serviceable parts from unserviceable but reparable equipment to bring a like piece of equipment to operational status. Controlled exchange requires command authorization.

- Technical manuals. Technical manuals provide technical information (operator instructions, repair procedures, and repair parts) about specific pieces of equipment. Technical manuals are referred to as -10s (operator's manuals), -20s (unit and direct support maintenance manuals), -30s (direct support/general support manuals), -40s (general support and depot manuals), and -14s (applies to all levels).

- Maintenance forms and records. Numerous forms and records are used to document maintenance activities (see DA PAM 738-750). These records are maintained for historical purposes, to ensure necessary services are performed, and to establish requirements for repair parts stockage.

- Dispatch. The DD Form 1970 is commonly referred to as a "dispatch." It is issued to the vehicle operator by the unit maintenance clerk before the vehicle is used.

- Inspection and maintenance work sheet. The DA Form 2404 is the "bread and butter" form of unit-level maintenance. The operator uses this form to record faults he cannot correct through PMCS. Unit maintenance personnel refer to the form to identify necessary repairs and annotate the form to indicate that they have corrected the fault. It is used when conducting scheduled service and during any other technical inspection. The DA Form 2404 is quite versatile and is the most frequently used form in the motor pool.

- Maintenance request. The DA Form 2407 is used by unit maintenance as a request to direct support for repair work.

- Lubrication order. The lubrication order (LO) is more like a technical manual than a maintenance form. It details how to lubricate the vehicle, the type of lubricant to use, intervals to be observed, and special precautions. An LO should be kept on each vehicle with the appropriate TM.

- Medical equipment maintenance support. Medical equipment maintenance support was discussed in Chapter 1.

- Battle damage assessment and repair. Battle damage assessment and repair techniques expedite the return of a damaged piece of equipment to the current battle. Battle damage assessment is used to determine the extent of damage to equipment. Equipment is classified according to the type of repair required, and plans are made for repair of each item. Priorities for repair of battle damaged items are usually–

  - Most essential to the immediate mission.
  - Reparable in the least time.
  - Reparable but not in time for immediate mission.

Battle damage repair involves use of emergency repair techniques to return a system to a full or partial mission capability. Battle damage repair is normally used only in combat at the direction of the commander.

NOTE

Battle damage assessment and repair does not include medical equipment.

Section II. DIVISION SURGEON

5-11. Duties

The division surgeon is an MC officer, AOC 60A. He is a special staff officer and is normally under the staff supervision of the G 1 in those divisions under the MSB/FSB design. Generally, the surgeon's duties are administrative; the division commander charges him with the full responsibility for the technical control of all medical activities in the command. The division surgeon coordinates HSS activities through the G 1. In airborne and air assault divisions, the division surgeon is the medical battalion commander. He is assisted by the division surgeon's section of the medical battalion. In those divisions which are under the MSB/FSB design, the division surgeon's staff is assigned to the division surgeon's section of the division HHC. Personnel assigned to this section include a chief medical NCO (MOS 91B50), a clerk typist (MOS 71L1O), and a patient administration specialist (MOS 71G1O). These personnel, along with the DMOC staff, assist the division surgeon in the performance of his duties. The division surgeon advises the division commander on all medical or medical-related issues. These issues include, but are not limited to–

- Health of the command.
- Medical support operations.
- Medical services provided to division personnel.
- Preventive medicine.
- Combat stress control.
- Medical evacuation.
- Dental services.
- Medical training.
- Medical intelligence.
- Civil-military operations.
- Medical logistics.
- Status of wounded.
- Disease and nonbattle injury casualties.

5-12. Responsibilities

The division surgeon is assisted by the medical staff elements identified earlier in this chapter. His responsibilities include–

- Advising on health status of the command and of the occupied or friendly territory within the commander's area of responsibility.
- Reviewing all division OPLANs and contingency plans to identify potential medical hazards associated with geographical locations and climatic conditions.
- Advising on the medical effects of the environment, NBC, and directed-energy devices on personnel, rations, and water.
- Determining requirements for the requisition, procurement, storage, maintenance, distribution management, and documentation of medical, dental, and optical equipment and supplies.
- Identifying medical shortfall items and establishing a supplemental level through an SOP.

NOTE

Common table of allowance 8-100 should be used to further identify items to improve medical readiness. Any supplemental authorization should be routed through the major Army command (MACOM) surgeon for information and documented in an SOP.

- Determining requirements for medical personnel and making recommendations concerning their assignments.

- Coordinating with medical unit commanders (to include leaders of organic medical platoons and sections) for continuous HSS.

- Submitting to higher headquarters those recommendations on professional medical problems which require research and development.

- Recommending use of captured Class VIII supplies in support of EPWs and other recipients.

- Advising on medical intelligence requirements (including the examination and processing of captured medical supplies as directed by the corps surgeon).

- Providing recommendations on allocation and redistribution of AMEDD personnel, health service logistics, and HSS during the reconstitution process.

- Advising commanders about the preventive medicine aspects of reconstitution, and availability y and use of CSC teams.

- Forwarding the Command Health Report IAW Chapter 3, AR 40-5.

- Advising commanders on the effects of accumulated radiation exposure, possible delayed effects from exposure to chemical or biological agents, and use of pretreatments.

- Advising commanders on disposition of personnel exposed to lethal but not immediately life-threatening doses of radiation or chemical and biological agents.

- Planning and coordinating the following HSS operations:

  - The system of treatment and medical evacuation, including aeromedical evacuation by Army air ambulance units.

  - Dental services (in coordination with the division dental surgeon).

  - Veterinary food inspection, animal care, and veterinary preventive medicine activities of the command, as required.

  - Professional support in subordinate units.

  - Preventive medicine services (in coordination with division preventive medicine officer).

  - Medical laboratory and blood banking services.

  - Combat stress control and NP care (in coordination with division psychiatrist).

  - Medical supply, optical, and maintenance support, including technical inspection and status reports.

  - Medical civic actions programs.

  - Health service support within the command.

  - Health service support aspects of rear operations.

  - Assignment of medical personnel.

  - Preparation of reports regarding medical administrative records of injured, sick, and wounded personnel.

  - Collection and analysis of operational data for on-the-spot adjustments in the HSS structure and for use in postwar combat and materiel development studies.

5-13. Interactions with Division Staff

The division surgeon's interactions with the division staff will vary depending on division HSS requirements or HSS initiatives deemed necessary to maintain the health of the command. Civil-military operations, host-nation support, EPW patients, and special operations are only a few of the many other areas which necessitate interactions between the division surgeon and division staff elements. The division surgeon interacts with the appropriate division staff element and, with assistance from his supporting medical staff elements, coordinates and monitors HSS activities throughout the division. He provides technical guidance as necessary to ensure that all HSS activities are accomplished IAW established professional standards, approved doctrine, and division HSS SOPS. The division commander and division staff members are informed and updated as

required on division HSS operations. Examples of subject areas which require interactions between the division surgeon and division staff members or sections are shown in Table 5-1.

Table 5-1. Interactions Between Division Surgeon and Division Staff

	SUBJECT	DIVISION STAFF SECTION
1.	Casualty estimates	G1
2.	Civil affairs/host-nation support	G5
3.	Medical intelligence	G2
4.	Contingency operations	G3
5.	Health service support	G1/G3
6.	Replacement and reconstitution operations	G1/G3/G4
7.	Enemy prisoner of war operations	G1/G3
8.	Army airspace command and control	G3 Air
9.	Food service and preventive medicine matters	G4

5-14. Interactions with the Division Medical Operations Center

The division surgeon and the DMOC must maintain a close working relationship. The DMOC functions under the technical supervision of the division surgeon. The technical supervisory control that the division surgeon exerts over all medical units or elements assigned to the division requires continuous communications and coordination between the division surgeon and the DMOC. The DMOC assists the division surgeon as required with the division surgeon's areas of responsibility. The DMOC assists the division surgeon with the development of the division HSS plan. In coordination with the division surgeon, the DMOC monitors and coordinates division HSS activities. Information and updates are provided to the division surgeon as required on coordination activities of the DMOC and the status of HSS operations. The DMOC and the division surgeon must ensure that HSS activities are sufficient to meet division and tactical requirements. The division surgeon and the DMOC chief must keep the division and DISCOM staff updated on division HSS activities. The division surgeon briefs the division commander and the DMOC chief briefs the DISCOM commander as required on HSS issues. The division surgeon and the DMOC staff communicate and coordinate through technical channels, then use command channels as required to conduct HSS operations or to accomplish HSS requirements. Additional information pertaining to the DMOC is found in FM 8-10-3.

5-15. Interface with Corps Surgeon

The division surgeon interfaces with the corps surgeon while the DMOC or medical battalion staff interfaces with the supporting corps medical units. The division surgeon may focus his attention on critical medical support requirements. The interface between the division surgeon and the corps surgeon is not limited to, but may pertain to, the following:

- Medical evacuation from the division.
- Division HSS requirements.
- Ground and air ambulance support.
- Class VIII resupply and medical maintenance.
- Blood (Group O packed red cells).
- Status of corps medical elements attached to the division.
- Captured medical supplies and equipment.
- Reinforcement and reconstitution of HSS elements.
- Augmentation (for example, surgical squad).
- Civil affairs and host-nation support.

- Communications.
- Locations of medical elements in support of the division.
- Preventive medicine, CSC/mental health, dental, or veterinary consultation or support.
- Dedicated hospital support.
- Personnel replacements (corps supported).

5-16. Division Health Service Support Standing Operating Procedures

The division surgeon is responsible for the development of HSS SOPs for the division. He is assisted with the development of both tactical and garrison SOPs by the DMOC or the division surgeon's section in the medical battalions. The division HSS SOPs serve as the foundation for all subordinate medical units or elements to develop their HSS SOPs. Division HSS SOPs should be clear and concise but provide sufficient details on procedural requirements. HSS SOPs must be maintained and reflect procedural guidance that supports current mission and doctrinal requirements. Division HSS SOPs should be reviewed at least every 6 months. Health service support SOPs are developed or revised as required. Subject areas identified in Table 5-2 should be considered when developing HSS annexes and the division SOPs. Subject areas identified in Table 5-3 should be considered when developing peacetime garrison SOPs.

Table 5-2. Tactical Standing Operating Procedures for HSS Division Operations

1.	Decontamination, treatment, and disposition of nuclear, biological, and chemical casualties.
2.	Medical situation reports.
3.	Medical evacuation.
4.	Class VIII resupply.
5.	Management of captured medical materiels.
6.	Medical threat and intelligence information.
7.	Preventive medicine measures.
8.	Combat stress control preventive measures, triage, and restoration of battle fatigue casualties.
9.	Enemy prisoners of war and detained personnel casualty treatment and disposition procedures.
10.	Division blood management.
11.	Infectious and contaminated waste disposal procedures.
12.	Immunizations.
13.	Medical administrative and reporting requirements.
14.	Safety procedures for patient treatment and care.
15.	Civil affairs and host-nation medical support.
16.	Casualty estimates.
17.	Replacement and reconstitution operations.
18.	Area medical and dental support.
19.	Area ambulance support.
20.	Integration of corps medical elements into division HSS operations.
21.	Ambulance exchange point operations.
22.	Army airspace command and control.
23.	Mass casualty procedures.

5-17. Medical Training

The division surgeon monitors medical training in the division. He observes medical training for medical personnel and self-aid/buddy aid and combat lifesaver refresher training for nonmedical personnel. He monitors training time provided to medical units or elements compared to their medical support role for training. The division surgeon through the division commander and the G3 initiates medical training and first aid and combat lifesaver training programs for the division. These

Table 5-3. Peacetime/Garrison Standing Operating Procedures

1.	Training of medical personnel.
2.	Medical support for division training.
3.	Aid station/troop medical clinic operation procedures in garrison.
4.	Dependent care.
5.	Medical proficiency training.
6.	Professional training.
7.	Credentialing committees.
8.	Granting clinical privileges.
9.	Deployment of division medical elements.
10.	Expert Field Medical Badge training program.
11.	Pregnant soldiers.
12.	Infectious and contaminated waste disposal procedures.
13.	Handling of blood and blood products.
14.	Immunization programs.
15.	Quality assurance.
16.	Medical materiel quality assurance program.
17.	Mobilization.

programs are conducted for the purposes of correcting a known training deficiency or to enhance the proficiency of medical personnel. Medical training deficiencies may be noted as a result of ARTEP test, feedback from brigade, battalion, or company commanders, or from the division surgeon's observations. Some of the medical training programs (first aid and combat lifesaver) may be DA-directed. The division surgeon coordinates with the Director of Health Services (DHS) pertaining to medical proficiency training for division personnel at MTFs. The division surgeon and the DHS develop policies and procedures for training, utilization, and withdrawal of division medical personnel from supporting MTFs. The division surgeon monitors the AMEDD Continuing Health Education (CHE) Program for the division. He monitors CHE points and requirements for AMEDD personnel as required by AR 351-3. He coordinates with the local medical department activity (MEDDAC) commander who is responsible for planning, conducting, and evaluating the local CHE Program. He obtains CHE training schedules from the MEDDAC commander and distributes it to appropriate AMEDD personnel assigned to the division. The division surgeon monitors and provides supervisory approval as required for temporary duty (TDY) for the purpose of obtaining CHE credits. He monitors programs attended by division medical personnel for compliance with AR 351-3. The following is a list of medical training programs and medical training, first aid, and combat lifesaver training which can be initiated by the division surgeon.

- Medical proficiency training program.
- Expert Field Medical Badge.
- Emergency medical technician training program.
- Combat lifesaver.
- Field sanitation team training.
- Nuclear, biological, and chemical patient treatment and decontamination training.
- Mass casualty training.
- Handling of blood and blood products.
- Preventive medicine measures.
- Prevention of sexually transmitted and other communicable diseases.
- Prevention and first aid treatment of cold weather injuries.

- Prevention and first aid treatment of heat injuries.
- Mental health/CSC measures.
- Medical implications of drug and alcohol abuse.
- Suicide prevention.
- Stress management/relaxation training.
- Identifying and treating stress reaction and BF.
- Cardiopulmonary resuscitation certification training.
- Common task training (medical).

5-18. Health Service Support Planning

The division surgeon is assisted with the development of HSS plans for the division by the supporting medical staff elements identified earlier in this chapter. Health service support estimates are provided by the division preventive medicine officer, division psychiatrist, and division dental surgeon (through the DMOC in those division under the MSB/FSB design). These estimates are used by the division surgeon to develop division HSS estimates. All factors must be considered during the initial development stages of the HSS plan. The HSS plan is updated as required to meet tactical or HSS operation requirements. Field Manual 8-55 provides an in-depth discussion of the planning process and considerations for HSS operations. The division surgeon should consider the following factors as he develops, reviews, or provides input to the division HSS plan:

- Mission.
- Threat.
- Division commander's estimates, guidance, and intent.
- Operational conditions.
- Operational constraints.
- Terrain.
- Military population supported.
- Medical personnel status, division medical elements.
- Equipment status of division medical elements.
- Supply status including Class VIII.
- Host-nation support.
- Communications status.
- Training status.
- Current health of the division.
- Casualty estimates.
- Medical evacuation requirements.
- Medical evacuation capabilities.
- Corps medical support.
- Nonmedical support requirements from division (engineers, transportation).
- Division support requirements.
- Special operations requirements.
- Army airspace command and control.
- Records and reports requirements.
- Phases of operations.
- Courses of actions.
- Information requirements (map essential elements of friendly information, updates).
- Policy and procedure updates.
- Humanitarian aid to local nationals.

5-19. Guide for Geneva Conventions Compliance

Medical personnel must advise commanders and leaders when their actions or orders, or the actions of personnel in their command cause the loss of protected status of medical facilities or medical personnel. Examples of outright violations of the Geneva Conventions and possible consequences are provided below.

a. Outright violations of the Geneva Conventions could result when–

- Using medical personnel to man or help man the perimeter of nonmedical facilities such as unit trains, logistics areas, or base clusters.
- Using medical personnel to man any offensive-type weapons or weapons systems.
- Ordering medical personnel to engage enemy forces other than in self-defense or in the defense of patients or MTFs.
- Mounting a crew-served weapon on a medical vehicle.
- Placing mines in and around medical units or facilities regardless of their type of detonation device.
- Placing booby traps in or around medical units or facilities.
- Issuing hand grenades, light antitank weapons, grenade launchers, or any weapons other than rifles and pistols to a medical unit or its personnel.
- Using the site of a medical unit as an observation post, a fuel dump, or to store arms or ammunition for combat.

b. Possible consequences of violations described in *a* above are–

- Loss of protected status for the medical unit and medical personnel.
- Medical facilities attacked and destroyed by the enemy.
- Medical personnel being considered prisoners of war rather than retained personnel when captured.
- HSS capabilities are decremented.
- Fewer medical personnel to provide hands-on care.
- Decreased laboratory and x-ray services.
- Decreased medical evacuation.

c. Other examples of violations of Geneva Conventions include–

- Making medical treatment decisions for the wounded and sick on any basis other than medical priority/urgency/severity of wounds.
- Allowing the interrogation of enemy wounded or sick even though medically contraindicated.
- Allowing anyone to kill, torture, mistreat, or in anyway harm a wounded or sick enemy soldier.
- Marking nonmedical unit facilities or vehicles with the red cross emblem or making any other unlawful use of the red cross emblem.
- Using medical vehicles marked with distinctive Geneva emblem (red cross on a white background) for transporting nonmedical troops and equipment/supplies or using medical vehicles (M577 or Ml13) as a tactical operations center.

d. Possible consequences of violations described in *c* above are–

- Criminal prosecution for war crimes.
- Reprisals taken against our wounded in the hands of the enemy.
- Medical facilities attacked and destroyed by the enemy.

- Medical personnel being considered prisoners of war rather than retained personnel when captured.
- Decreased HSS capabilities.
- Fewer medical personnel to provide hands-on care.
- Decreased laboratory and x-ray services.
- Decreased medical evacuation.

NOTE

The use of smoke and obscurants by medical personnel is not a violation of the Geneva Conventions.

e. Definitive information pertaining to the Geneva Conventions is found in FM 8-10.

APPENDIX A

COMBAT STRESS CONTROL (BRIGADE AND DIVISION SURGEON'S RESPONSIBILITIES)

A-1. Army Medical Department Functional Area

Combat stress control is a recognized AMEDD functional area. Combat stress control refers to a coordinated program conducted primarily by organic unit mental health personnel. These personnel are augmented (as needed) by corps or echelon above corps specialized medical CSC units. The composition, capabilities, and future allocations of CSC units are discussed in paragraph A-4.

a. The CSC mission is to assist commands and medical units with CSC. Assistance is provided with the prevention of strsss casualties and the triage and treatment of BFCs. This is accomplished through six CSC mission functions which include–

- *Consultation* to unit leaders and medical personnel.
- *Reconstitution* support to seriously attrited units.
- *Combat NP triage* of stress and neuropsychiatric cases.
- *Stabilization* of seriously disturbed disruptive cases.
- *Restoration* (1 to 3 day[s] of forward treatment) for BFCs.
- *Reconditioning* (7 to 21 days rearward treatment, as needed).

b. The objectives of the above mission functions are to–

- Prevent BF through control of stressors.
- Identify and provide early intervention for stress or NP disorders.
- Maximize RTD of BFCs.
- Minimize misconduct combat stress behaviors (MCSBs) and subsequent post-traumatic stress disorder.

c. An FM for CSC (tactics, techniques, and procedures) is now under development. This FM will also provide principles and background. When developed, it will be required reading for brigade and division surgeons. It will be recommended reading for all line unit leaders and all division medical officers and NCOs.

d. This appendix summarizes the specific responsibilities of the brigade and division surgeons for CSC.

NOTE

The acronym "PIES" is a handy method of remembering how to treat BFCs. This acronym stands for:

- *P*roximity (treat as close to the soldier's unit and the battle as possible; prevent overevacuation).
- *I*mmediacy (treat immediately without delay).
- *E*xpectancy (with expressed positive expectation of full and rapid recovery).
- *S*implicity (use simple, brief, nonmysterious methods to restore physical well-being and self-confidence; use "nonmedical" terminology and techniques).

Treating with PIES is the standard of care for treating BFCs. Overevacuating a BFC quickly without applying PIES is analogous to putting a tourniquet on the leg of a soldier with a superficial bleeding wound (one that could have been controlled with a pressure dressing), evacuating him, and having him lose the leg.

e. Control of combat stress is often the decisive factor–the difference between victory and defeat–at all intensities of conflict.

(1) In high-intensity battle, BFCs held for treatment may comprise 25 to 50 percent of all battle-related casualties. These usually come at times of mass casualties. Of all casualties who can RTD within 3 days, 15 to 30 percent will be BFC cases. These soldiers must be treated as quickly and as close to their units as possible; that is, they must be treated in the BSA and DEA. If overevacuated, they are likely to be lost to combat and develop chronic disability. Furthermore, if line units are not able to manage the large number of duty or rest cases of BF themselves, those cases become BFCs and could overwhelm the medical evacuation and treatment system.

(2) The threat of NBC weapons will intensify stress factors. The invisible, pervasive nature of many of these weapons creates a high degree of uncertainty and ambiguity, with fertile opportunity for false alarms, rumors, and maladaptive stress reactions. The use of NBC weapons will intensify the effects of BF and increase the number of BFCs. Their use will also complicate the delivery of immediate, proximate treatment and impose a greater logistical burden on such treatments.

(3) In low-intensity conflict and military operations short of war, BF is less frequent and can usually be treated in the soldier's own unit without requiring medical holding. In some contingency operations, however, special planning may be needed to assure immediate return of these mildly battle-fatigued soldiers to their units. If at all possible, the plan should also hold BFCs for 1 to 3 days restoration in the theater even when all surgical cases are being evacuated under a zero-day evacuation policy. Failure to provide such inexpensive proximate treatment will be paid for in greatly increased chronic psychiatric disability.

(4) In low-intensity conflict, terrorist/guerrilla tactics are deliberately designed to provoke MCSBs which demoralize the defender and invalidate his legitimacy in the eyes of the local people, the US home front, and the world. Misconduct combat stress behaviors, such as use of excessive force, commission of atrocities, self-inflicted wounds, indiscipline, and substance abuse, can be minimized through medical CSC assistance to command.

(5) Post-traumatic stress disorder (PTSD) can occur following high- or low-intensity combat experiences, as well as after training accidents and natural disasters. It occurs even in soldiers who performed very well at the time without obvious signs of distress. It is common in inadequately treated BFCs and in soldiers who committed misconduct stress behaviors. Post-traumatic stress symptoms may result in impaired duty performance, personal problems, and loss of valuable, experienced personnel who decide not to reenlist. Sound "preventive maintenance" at the time of the stress and in the period of demobilization greatly reduces the risk of PTSD.

f. Control of combat stress is every commander's responsibility y and every leader's business. Controlling stress and correctly managing stress casualties is a part of every medical unit's mission. The primary mission of CSC units and mental health sections includes prevention, triage, and treatment of stress casualties. They accomplish this mission through consultation and training of all Army units on CSC. The mission of mental health sections and CSC units does not eliminate the responsibility of all commands and non-CSC medical units to maintain the fighting strength. If CSC assets are not available to assist, the requirements still must be met. The most critical stage is far forward prevention and management of stress cases in the unit and at Echelons I and II medical facilities.

A-2. Brigade Surgeon's Responsibilities for Combat Stress Control

a. The brigade surgeon is responsible for the medical aspects of CSC within the brigade.

(1) He oversees CSC operations to ensure full utilization of CSC personnel.

(2) He advises and directs, as necessary, all CSC personnel operating within the brigade area.

(3) He provides tactical update on the brigade's mission and current operations to CSC personnel.

(4) He coordinates CSC support with unit commanders and leaders within the brigade.

b. The following CSC support is allocated to a brigade from the division mental health section (DMHS).

(1) The DMHS exercises technical supervision over the brigade/battalion combat psychiatry or CSC program.

(2) In all divisions, doctrine specifies that the DMHS should detail a behavioral science NCO (MOS 91G) to the BSA to assist the brigade surgeon with CSC. This NCO performs duties as the mental health liaison NCO and brigade combat stress control coordinator (BCSCC). The same NCO should work with the same brigade for both peacetime and combat operations.

(3) In separate brigades (and some divisions which have not converted to the L-edition TOES), the 91G NCO BCSCCs are organic to the medical company. They receive technical supervision from the DMHS officers or the most available CSC unit officer.

(4) The BCSCC coordinates through the DMOC, with approval from the brigade surgeon, for additional CSC support when needed. This support should be anticipated and integrated into the brigade prior to the actual requirement or crisis. It includes routine consultant/supervisory visits by the DMHS officers and/or corps-level CSC teams and temporary reinforcement.

c. Combat stress control actions in the brigade include–

(1) *Briefing* the brigade commanders, brigade staff, unit commanders, and all brigade medical elements, as required, on CSC prevention, treatment, planning, and training issues.

(2) *Emphasizing* CSC in the brigade for the prevention of BF and MCSB. This is accomplished by—

- Controlling stressors (such as sleep loss, dehydration, poor hygiene, lack of information or sense of purpose, boredom, frustration, and home front problems).

- Establishing the need for early identification and correct management of stress reactions within the soldier's own unit by comrades, leaders, and medics.

- Providing realistic training that promotes positive leadership, unit cohesion, and confidence in self, comrades, equipment, and support, including medical support.

(3) *Providing* immediate, forward evaluation of serious BFCs and NP disorders who need medical evaluation.

- Physicians and PAs perform an adequate screening examination for physical, neurological, and mental status to rule out or treat emergency conditions.

- They triage BF cases into the categories of "duty," "rest," "hold," or "refer," based on where they can be treated.

(4) *Treating* "duty" BFCs within the small unit, on duty status.

- The battalion surgeon, assisted by battalion medical personnel and the DMHS, trains unit leaders and combat lifesavers.

- The brigade surgeon, BCSCC, and DMHS officers provide technical supervision and assistance.

(5) *Sending* "rest" BF cases for 1 to 2 days of limited duty in the soldier's battalion headquarters and support company or battery. The supply and services or maintenance companies of the FSB could also be used.

- The BCSCC and other medical/CSC personnel visit these units frequently ("circuit-ride") to provide consultation and technical supervision.

- They assure correct management for rapid RTD and check to see that other diagnoses are not missed.

(6) Holding for treatment the "hold" BF cases who need medical observation. These cases should be able to receive "restoration" treatment at the FSMC for 1 day (or longer if necessary and feasible).

(a) The feasibility of holding BFC cases at the FSMC depends on the tactical situation, patient work load, and the soldier's symptoms.

(b) Restoration consists of–

- Reassurance that battle fatigue is normal and temporary.
- Respite from extreme danger or stress.
- Rehydration.
- Replenishment (food, hygiene).
- Rest (sleep).
- Restoration of confidence through activities.

(c) The activities maintain the soldier's identity as a soldier through encouragement to talk about what happened and regain perspective, physical exercise (sports), plus useful work. Food, water, shelter, and replacement clothing and gear (when necessary) are obtained through the FSB and FSMC.

(d) Cases with dramatic BF symptoms are kept separate from all patients until they calm down.

(e) Recovering BFCs and return-to-duty wounded in action (WIA) and DNBI patients are kept separate from all severely wounded and ill patients.

(f) Battle fatigue casualties' are kept under the supervision of the patient holding squad's 91Cs and 91As unless the latter are needed for other duties. The BFCs may sleep in the holding squad tents (when weather requires and when space is available within the limits for mixing BFCs).

(g) If patient holding capabilities are filled with WIA and DNBI patients, field expedient shelters or available buildings should be utilized. If patient work load (as during mass casualties) prevents patient holding personnel from providing supervision for BFCs, other personnel may be utilized as a temporary expedient. These personnel include cooks, mechanics, or patients (such as a line NCO with minor wound or injuries who cannot RTD for 1 to 2 days but who can lead a squad of recovering BFCs).

(h) The BCSCC is not available to provide continuous care, but provides technical supervision to these care givers and evaluates problem cases. He provides consultation to units for duty and rest cases as he "circuit rides" the BSA.

(i) When the tactical situation permits, the FSMC should be augmented with additional CSC personnel from DMHS or corps CSC units previously attached to DMHS. These reinforcements can be delivered to the BSA on short notice by air ambulances bringing lightweight supplies. These personnel can take responsibility for BFC triage and initial treatment. Food, water, shelter, and field services must still be provided by the FSMC/FSB.

(j) Additional CSC personnel can be requested by the DMHS from corps via the DMOC in order to provide restoration for more BFCs in a stable BSA. Ideally, these CSC teams should already have been fully introduced to and familiarized with the BSA. They can bring vehicles with additional supplies and tentage. These CSC reinforcements can be delivered to the BSA on short notice by air ambulance if necessary.

(k) For anticipated high-intensity conflict under Medical Force 2000 doctrine, the FSMC should routinely be reinforced by a combat stress control preventive (CSCP) team. This team will normally be deployed from the corps CSC medical company or detachment and attached to DMHS or the brigade FSMC. (Currently, a similar preventive team may come from the medical detachment, psychiatric, or "OM Team.") This CSCP team normally includes–

- Psychiatrist (or other mental health officer, based on availability).
- Social work officer.
- Behavioral science specialists (two).

This team has a 5/4-ton truck with trailer and two general purpose small tents with camouflage. Its mission is to reinforce the BCSCC in his circuit-riding mission, increase neuropsychiatric triage expertise, and allow 1- to 2-day restoration of small numbers of cases when feasible. It also supports unit reconstitution (see (8) below).

(l) The number and type of BFCs restored at the FSMC may be limited by the tactical situation. The requirement for tactical mobility (conducting unit movement) may require that BFCs be transported to a "division fatigue center" in the division rear.

(7) *Coordinating* transport for "refer" BFCs (those that cannot be held for treatment at the FSMC). These cases are usually sent to the next rearward MTF which is the main support medical company (MSMC) in the division.

- Always restate the positive expectation of their rapid and full recovery prior to their evacuation.

- Use nonmedical transport such as combat service support vehicles returning to the division rear to backhaul BFCs. This is coordinated through the FSB and DMOC.

- Use ambulances only when litter and physical restraints are required. The preferred method for transporting BFCs is by ground vehicle.

(8) *Providing* CSC reconstitution support, if required, to units withdrawn from combat for reconstitution.

- The BCSCC should deploy to the reconstitution site along with other CSS and medical teams.

- The BCSCC should be reinforced for the mission by the DMHS or corps CSC teams.

- The BCSCC and CSC should monitor and facilitate the provision (by the higher command) of field services, food, and shelter at the reconstitution site to assure hygiene, replenishment, and sleep for the entire unit, especially the unit leaders.

- Combat stress control personnel facilitate after-action debriefings in small groups of leaders and combat teams. They assist the command with the reintegration of surviving personnel and new replacements and leaders into a cohesive unit.

- The CSC personnel also provide on-site treatment for soldiers suffering from BF.

(9) Assisting the command with after-action debriefings following catastrophic actions and again when redeploying home from combat. Units or individuals who are rotating home should routinely be assisted by the DMHS or corps CSC unit. After-action debriefing will work through traumatic experiences, consolidate lessons learned, and prepare the troops for changes at home.

A-3. Division Surgeon's Responsibilities for Combat Stress Control

a. The division surgeon, as senior staff medical officer, is responsible for the staff support of medical CSC throughout the division.

(1) In divisions with a medical battalion, the division surgeon is also the medical battalion commander and has command responsibility for the DMHS which is part of the battalion headquarters.

(2) In those divisions under the MSB/FSB design, the DMHS is assigned to the MSB medical company which is under the DISCOM. The division surgeon does not have command authority, but does exercise technical control.

(3) In all divisions, the division psychiatrist is the principal advisor to the division surgeon on all psychiatric and CSC activities within the division. He is responsible for NP care of division personnel. He coordinates and reports to the division surgeon through medical channels IAW AR 40-216 and the division SOP.

(4) The social work officer, clinical psychologist, and other DMHS personnel provide input to the division surgeon through the division psychiatrist. When the division psychiatrist is not present, these personnel communicate directly with the division surgeon through medical channels as required.

b. Division surgeon actions in support of CSC include–

(1) *Developing* contingency and operational plans based on input from the DMHS.

(2) *Advising* the division commander and staff on the division CSC program. This program includes the CSC plan for prevention and treatment of stress cases and for training division personnel.

(3) *Providing* technical supervision and advice to the DISCOM and brigade surgeons.

(4) *Ensuring* that the DMHS remains proactive and supports the entire division. This support should include prevention-oriented training activities at the FSMCs and troop-unit level. Specifically, this includes—

(a) Ensuring that a behavioral science NCO is allocated to each brigade as BCSCC. This NCO should be trained and qualified to carry out his duties.

(b) Mentoring the division psychiatrist and other DMHS officers to assure their total familiarity with HSS operations within the division and with field survival skills and military organization and vocabulary. They should be familiar with the division's mission, HSS OPLAN/OPORD, and SOPS. The psychiatrist (like all senior medical officers in the division) must be prepared to assume the role of division surgeon if required.

(c) Asserting division influence at MACOM level to assure that adequate mental health/CSC personnel are assigned to the division and that corps-level (and/or MEDDAC-level) CSC/mental health backup and reinforcing support is provided.

NOTE

In peacetime, the DMHS has clinical responsibilities under AR 40-216 and is authorized to operate a clinic in the division area. This clinic is operated either separately or in conjunction with the MEDDAC community mental health service. This is a useful method of sustaining clinical credentials and expertise. However, when such clinics are operated, AR 40-216 states "clinical responsibilities in garrison must not interfere with participation in field exercises, deployment exercises, and maintenance of combat readiness."

c. In combat, the division surgeon supports the DMHS's triage and limited restoration activities in the MSMC.

(1) The division surgeon must not allow the reactive restoration activities to displace either proactive preventive consultation throughout the division, reconstitution support missions, or staff input for planning and coordinating CSC requirements.

(2) No BFC or NP case is evacuated from the division without individual clearance from the division psychiatrist (AR 40-216).

(3) The MSMC can provide a more stable facility for restoration than can the FSMCs. The MSMC can usually hold BFCs for up to 3 days. The DMHS officers provide continuous NP triage and treatment expertise, but must rely on patient holding squad personnel and tents unless reinforced by a corps CSC unit.

(4) When the MSMC is reinforced by a corps-level CSC team from the current medical detachment, psychiatric (Team OM), or a Medical Force 2000 medical company or medical detachment, CSC, this team can staff a "fatigue center." The fatigue center (one or more general purpose medium or large tents under camouflage) should be slightly separate from the MSMC to emphasize its "nonpatient care" status. Field

services, water, fuel, and maintenance for vehicles must be provided for the augmenting CSC restoration team and its caseload. Soldiers are temporarily "assigned" (not "admitted") to the fatigue center. They perform useful work details for the MSMC. They are, however, recorded on the MSMC's holding patient roster for personnel accountability.

(5) Stress casualties who recover with restoration in the MSMC or "fatigue center" should be returned to their original units for duty whenever possible by the same route as recovered minor wound or DNBI patients. Cases who do not recover sufficiently in 2 to 3 days to RTD should be transferred (preferably by nonmedical ground vehicles) to an Echelon III "reconditioning center" run by the OM Team or CSC company collocated with a designated corps hospital.

(6) When units are withdrawn from combat for reconstitution, the division surgeon coordinates DMHS or CSC unit team deployment to the reconstitution site.

(7) If a unit experiences a catastrophic event, the division surgeon coordinates the deployment of DMHS or CSC teams to assist command with unit debriefings. Catastrophic events may include—

- Serious training accidents.
- Aircraft crashes.
- Natural disasters.
- Terrorist acts.
- Suicides in the unit.

When appropriate, Army families are included in these debriefings.

d. When units are redeployed home from combat, the division surgeon recommends and coordinates DMHS or CSC unit assistance to the division units.

(1) He assists in conducting after-action debriefings at the small unit level. These debriefings will focus on the traumatic experiences of the troops and prepare them for changes at home. Debriefings should include and be facilitated by DMHS personnel, chaplains, supporting CSC units, and installation MEDDAC mental health personnel.

(2) He consolidates lessons learned by the DMHS, unit leaders, and medical elements into division SOPs.

A-4. Medical Force 2000 Combat Stress Control Unit Allocations

a. Projected fielding for the first medical companies and medical detachments, CSC, will be between 1991 and 1995. Full basis of allocations would provide—

- One CSC detachment (23 personnel) per division.
- One CSC detachment per two to three separate brigades.
- One CSC company (85 personnel) per two to three divisions in corps.

b. Personnel ceilings may reduce the allocation to one CSC detachment per division, one CSC company per corps, and require the CSC company to also support any separate brigades or regiments.

c. Division and brigade surgeons should strive to achieve a habitual training and health care support relationship between division medical units and their supporting corps-level CSC detachment.

(1) Active Component CSC detachment personnel should be assigned where they provide mental health, NP, and occupational therapy services. This could be at the division's post or regional medical center. These personnel must also be provided the opportunity for field training. They should train with the divisions and brigades and with their mental health sections.

(2) Reserve Component CSC detachment personnel should be in the same region as the division or brigades which they support. They should train with the DMHS and troop units on

weekend drills and during annual training and provide consultation and clinical support.

d. Combat stress control (mental health) personnel and units, more than any other medical personnel, need to be familiar with and trusted by the combat unit leaders. They must know the stressors of the battlefield and the missions and duties of the soldiers for them to credibly advise unit leaders on stress control and to declare a soldier psychologically ready for RTD. Because their mission takes them throughout the BSA and occasionally to reconstitution sites further forward (as part of reconstitution support convoys), they must be fully trained in combat survival skills so that they do not endanger their own lives or the missions and survival of the units they support. Giving them that confidence through training is, in part, the division and brigade surgeon's responsibility.

APPENDIX B

THE COMMANDER'S ROLE IN THE MILITARY JUSTICE SYSTEM

Section I. ACTIVE COMPONENT

B-1. Commander

Commanders play a major role in the military justice system by setting standards and enforcing discipline within their units. Good leadership techniques, reinforced by a strong NCO corps, provide most of the means to enforce discipline. However, sometimes it is necessary to use punitive measures such as trial by court-martial or punishment under Article 15, Uniform Code of Military Justice (UCMJ). This appendix provides background on the commander's role in the military justice system.

a. Disciplinary Problems. Commanders have many methods available to them to deal with disciplinary problems. These include administrative actions ranging from informal counseling, extra training, withdrawal or limitation of privileges, and administrative discharges, to punitive options such as punishment under Article 15, UCMJ, and trial by court-martial.

b. Prosecutorial Discretion. In the Army, prosecutorial discretion lies with the commander. The commander decides whether a case will be resolved administratively or referred to trial, and what the charges will be. The Manual for Courts-Martial (MCM) gives little guidance in exercising this discretion, except mandating that cases be resolved at the lowest possible level consistent with the seriousness of the offense. Although advice should be sought from the Staff Judge Advocate (SJA), the commander must ultimately make the decision whether prosecution is warranted. In the case of any minor incident, the commander exercising prosecutorial discretion should first decide that none of the varied administrative measures is sufficient before resorting to punitive options.

(1) The decision to refer offenses to trial by court-martial is difficult and can be made for the wrong reasons. When an apparently serious offense occurs, there is great pressure on a commander to do something. Congressional inquiries and expressions of interest from superior commanders tempt some to refer cases to trial to settle the matter. A case should never be referred to trial unless the convening authority is personally satisfied, by legal and competent evidence, that there is probable cause to believe that the accused is guilty and should be punished. On the other hand, a commander may find occasions when the accused's conduct satisfies the legal elements of a crime, but for reasons of compassion, the interests of justice, or other considerations, the accused should not be punished under Article 15 or by court-martial.

(2) The commander must exercise reasoned judgment when confronted with a military justice problem. Always keep in mind the policy of handling problems at the lowest possible level commensurate with the seriousness of the offense. Also, keep in mind that military justice is only one way of maintaining discipline—it is a tool of leadership, but not the only tool. While discretion in many of these areas rests with the commander, legal advice can and should be sought from the trial counsel or SJA.

B-2. Command Influence

a. Article 37 of the UCMJ makes it unlawful for a convening authority to attempt to influence the members of a court-martial as to the outcome of the trial. This is the area where a commander must exercise a great deal of care. There must be no appearance of unlawful command influence in the operation of the military justice system. It is important personally for the commander to learn to control his impulses. It is also important for the discipline and efficiency of the command that the commander be considered fair and impartial. Lastly, there is systemic importance—the impact on civilian impressions about military justice.

b. Unlawful command influence is unnecessary. The system provides commanders with all the tools necessary to effectively implement and control a disciplinary system within their command. Unlawful command control is easily avoided. There are only a few simple rules which must be followed. Command control problems are often problems in communication. The good intentions of a commander lead to command control problems when subordinates misinterpret or misunderstand the commander's message.

c. Lawful controls and prohibitions.

(1) In the pretrial phase, the commander has the power to gather facts, using either a commander's inquiry, law enforcement agencies, or an Article 32 investigation. He has the power to affect disposition of an incident, using the nonpunitive options mentioned above, an Article 15, or by preferral of charges, and, if authorized, referral to court-martial. The commander may also overrule a subordinate's disposition, pull the action up to his level, and take whatever action he sees fit. During the trial phase, the General Court-Martial Convening Authority (GCMCA) may be able to grant immunity to witnesses. During the posttrial phase, the commander will, if he referred the case to trial, approve or disapprove the findings and sentence of the court. He may also request reconsideration of adverse rulings, or order a rehearing in cases where a legal error was made during the trial that substantially affected the findings or sentence.

(2) Prohibitions pertaining to command influence include—

- Ordering a subordinate commander to make a specific disposition.

- Referring a case to trial and personally signing the charge sheet, or ordering someone else to sign the charge sheet if you are the commander with authority to refer a case to trial.

NOTE

If the commander with authority to refer signs the charge sheet, he has become an accuser and will be disqualified from further action.

- Interfering with subordinates in exercising their own independent judgment (avoiding policy letters).

The commander cannot attempt to influence actions of a court-martial in arriving at findings or sentence. He cannot intimidate or discourage a witness from testifying for an accused. The commander cannot censure, reprimand, admonish, or give unfavorable efficiency ratings to personnel for participating as court members.

(3) There are several common situations which may cause problems in the area of command influence.

(a) Superior commanders sometimes establish policies concerning unit discipline. For example, a battalion directive may express concern over the high rate of motor vehicle violations. These directives do not violate Article 37 as long as they do not become too specific and as long as they do not mandate specific actions which cause the subordinate to surrender his discretion under the UCMJ. A directive which expresses concern over a high rate of motor vehicle accidents would be permissible, while a directive requiring all motor vehicle accident cases to be tried by general court-martial would be unlawful. Commanders should always staff any proposed directive through the supporting judge advocate to avoid even inadvertent unlawful command influence.

(b) Another problem in this area concerns instructions. Certain orientation courses on military justice may violate the prohibition against unlawful command influence. For example, instructions to potential court members immediately before trial of an absent without leave (AWOL) case as to the need for severe punishment in that type of case is unlawful.

(c) Finally, a commander must not show his personal interest in the outcome of a particular case or otherwise interfere in anyway with the conduct of the trial. He may not censure, reprimand, or admonish the court or any member, military judge, or counsel thereof, with respect to the findings or sentence adjudged by the court, or with respect to any other exercise of its or his functions in the conduct of the proceedings.

(4) There is an absolute prohibition against evaluating the performance of an individual as a member of a court-martial in preparing his efficiency report, or in determining his fitness for promotion, transfer, or retention.

B-3. Options Available to the Commander

At every level of command there are a number of options available to deal with a disciplinary problem. This section concerns the various

measures which can be taken when dealing with crimes committed by a soldier.

a. Adverse Administrative Actions and Eliminations. A commander may take or initiate administrative action whether or not charges have been or will be preferred, or have been dismissed short of trial. Administrative alternatives include—

(1) *Counseling (AR 600-20, paragraph 5-7).* This is a basic leadership tool and is used to assist soldiers in professional growth. It is not always adverse in nature. Soldiers will be counseled by a responsible person about deficiencies at least once before initiating separation action under provisions of AR 635-200. Each counseling session will be recorded in writing, normally on a DA Form 4856-R. Counseling statements will be filed in unit personnel files (not in Military Personnel Records Jacket [MPRJ] or official military personnel file [OMPF]).

(2) *Bar to reenlistment (AR 601-260).* Only personnel of high moral character, personal competence, and demonstrated adaptability to the requirement of the professional soldier's moral code will be reenlisted in the Regular Army. Persons who do not measure up to such standards may be barred from reenlistment. This is done on the basis that a soldier is either untrainable, unsuitable, or a single soldier/in-service couple (with dependent family members) who is unable to provide an approved family member care plan. Any commander in the soldier's chain of command may initiate a bar if the soldier's actions violate the standards set forth in AR 601-280. Normally, soldiers in a unit for less than 90 days or in their last 30 days of service will not be barred. The soldier is allowed 7 days to comment without right to counsel. Rebuttal matters are attached to the bar certificate. A bar to reenlistment must be reviewed by the unit commander at least once every 6 months after approval and 30 days before the soldier's permanent change of station or expiration term of service.

(3) *Administrative written reprimand (AR 600-37).* This is another leadership tool, the purpose of which is to officially document misconduct or poor performance in official files. For an enlisted soldier, the immediate commander or any higher commander in the chain of command, a supervisor, school commandant, general officer, or GCMCA can initiate. For officers, the immediate commander or higher level commander in the chain, a general officer, rater, intermediate rater, or senior rater can initiate. The soldier is entitled to notice of the proposed action and the opportunity to rebut the allegations. Memoranda of reprimand may be filed either in the local file or MPRJ, or in the DA file, the OMPF. Filing of memoranda in the MPRJ for both enlisted soldiers and officers may be directed by an immediate commander or a higher level commander, general officer, or GCMCA (for officers, also includes rater, intermediate rater, and senior rater). Reprimands are filed for 3 years or until reassignment to another general court-martial (GCM) jurisdiction. Filing in the OMPF must be directed by a general officer or a GCMCA.

(4) *Enlisted administrative separations.* The most common types are overweight (AR 635-200, Chapter 5); alcohol/drug rehabilitation failure (AR 635-200, Chapter 9); unsatisfactory performance (AR 635-200, Chapter 13); misconduct (AR 635-200, Chapter 14); and homosexuality (AR 635-200, Chapter 15). A soldier may receive either an honorable, general, or other than honorable (OTH) conditions discharge. A soldier always receives notice of action and has a chance to rebut. A soldier is entitled to a hearing before a board if he has more than 6 years of service or an OTH discharge is being sought.

b. Nonjudicial Punishment. Punishment may be imposed under Article 15, UCMJ, for minor offenses. Article 15 punishment provides the commander with an efficient and prompt means of maintaining good order and discipline, promoting positive behavioral changes in soldiers, and avoiding the stigma of a court-martial conviction. An Article 15 is appropriate for minor violations of the UCMJ, or when nonpunitive administrative measures fail or are inappropriate. There are summarized and formal Article 15 proceedings; the difference is the amount of punishment which can be administered and that only enlisted soldiers may receive a summarized Article 15. Only commanding officers may impose an Article 15. The commander must be a commissioned or warrant officer; noncommissioned officers have no Article 15 authority. An Article 15 may only be imposed on a soldier assigned or attached to the commander's unit. Acceptance of an Article 15 is **not** an admission of guilt. The soldier is merely agreeing to

let the commander be the person who will decide guilt or innocence and impose punishment. A soldier always has the right to demand trial by court-martial.

c. Preferring Court-Martial Charges. Any person subject to the UCMJ may prefer charges. However, they are ordinarily preferred by the accused's immediate commander. A person cannot be ordered to prefer charges to which he is unable to truthfully make the required oath on his own responsibility. If a superior authority directs that charges be preferred, the superior authority becomes the accuser, and, as such, he is barred from convening a court-martial to try the charges. When a superior authority has only an official interest in a case, he ordinarily will transmit the available information about the case to an officer of his command for preliminary inquiry and report, including, if appropriate in the interest of justice and discipline, the preferring of any charges which appear to be sustained by the available evidence.

d. Types of Courts-Martial.

(1) *Summary Court-Martial.* The Summary Court-Martial (SCM) is designed to promptly adjudicate minor offenses. The SCM can try enlisted personnel only. The maximum punishment, which depends on the accused's rank, is limited to confinement for one month, forfeiture of two-thirds pay for one month, and reduction in grade (see Rule for Courts-Martial 1301 (d), Manual for Courts-Martial, for permissible punishments). An accused may not be tried by a SCM over his or her objection. If the accused objects, the commander may then consider trial by a higher court-martial. The accused has no right to military counsel at the SCM, but has the right to consult with a military defense counsel before trial and may retain, at no expense to the government, counsel before, during, or after a SCM.

(2) *Special Court-Martial.* The Special Court-Martial (SPCM) can impose a maximum punishment of confinement for 6 months, forfeiture of two-thirds pay per month for 6 months, and reduction to the lowest enlisted grade. An SPCM may be authorized by the convening authority to adjudge a bad-conduct discharge (BCD). Such a court is known as a BCD SPCM. It differs from an ordinary SPCM in that a verbatim record of trial is required and the accused may have a right to an automatic appeal to the Army Court of Military Review.

(3) *General Court-Martial.* The General Court-Martial (G CM) tries the most serious offenses. A formal investigation must be conducted before charges may be referred to a GCM (Article 32, Uniform Code of Military Justice). The GCM may adjudge the most severe sentences authorized by law, including a dishonorable discharge, and when so empowered, death.

Section II. RESERVE COMPONENT JURISDICTION

B-4. Authority

Commanders will occasionally have Reserve Component (RC) soldiers assigned or attached to their unit. The Military Justice Amendments Act of 1986 changed the UCMJ and enlarged the scope of jurisdiction over RC soldiers for criminal acts. The Act extends court-martial jurisdiction over reservists while on all types of training without any threshold requirements. (National Guard Personnel must be in Federal, or Title 10, status before the UCMJ applies to them.) It extends court-martial jurisdiction over an RC soldier who violates the UCMJ by decreeing that jurisdiction does not terminate by virtue of release from active duty (AD) or inactive duty training (IDT). Further, it authorizes, under certain conditions, the involuntary order to AD of an RC soldier for the purpose of an Article 32 investigation, Article 15, or court-martial. The authority to order a member to AD is prescribed in AR 27-10, Chapter 21. The Act also significantly increases the powers and responsibilities of RC commanders and judge advocates.

a. As was stated above, US Army Reserve (USAR) soldiers will be subject to the UCMJ whenever they are in a Title 10, United States Code (USC) duty status. Examples of such duty status

are AD; active duty for training (ADT); active guard reserve (AGR) duty; and IDT. The IDT normally consists of weekend drills by units, but may also include any training authorized by appropriate authorities. Contact the servicing SJA if there is a question with regard to continuing jurisdiction.

b. Costs associated with disciplining RC soldiers will be paid out of RC funds.

B-5. Involuntary Active Duty and Pretrial Confinement for Reserve Component Soldiers

a. Reserve Component soldiers who are not serving on AD, and who are the subject of proceedings under Article 15 or court martial for offenses allegedly committed while in a Title 10 duty status, may be ordered to AD involuntarily by an Active Component (AC) GCMCA for purpose of—

- Investigation pursuant to Article 32, UCMJ.
- Trial by court-martial.
- Article 15, UCMJ proceedings.

b. Involuntary AD is authorized for any of the purposes set out in a above, but is not authorized for the sole purpose of placing an RC soldier in pretrial confinement. After involuntary activation, an RC soldier may be confined or deprived of liberty only upon the approval of the Secretary of the Army or his designee. Requests to place an RC soldier on involuntary AD will be forwarded through command channels to the appropriate major US Army Reserve Command (MUSARC) commander. Requests should include a copy of the charge sheet and a summary of the evidence supporting the charges. Prior to preferral of charges in such cases, commanders will consult with supporting RC and AC SJA personnel.

c. The RC soldier must be on AD prior to arraignment at a general or special court-martial, or prior to being placed in pretrial confinement.

B-6. Extending Reserve Component Soldiers on Active Duty

The requirements for AC GCMCA activation and/or Secretarial approval do not apply to RC soldiers on AD. Reserve Component soldiers serving on AD, ADT, or AT in a Title 10 duty status may be extended on AD involuntarily, so long as action with a view toward prosecution is taken before the expiration of the AD, ADT, or AT period.

B-7. Preservation of Jurisdiction and Punishment

a. Reserve Component soldiers remain subject to UCMJ jurisdiction for offenses committed while serving in a Title 10 duty status not withstanding termination of a period of such duty, provided they have not been discharged from all further military service.

b. All lawful punishments remaining unserved when RC soldiers are released from AD, ADT, AT, or IDT, including any uncollected forfeitures of pay, are carried over to subsequent periods of AD, ADT, AT or IDT. However, an RC soldier may not be held beyond the end of a normal period of IDT for trial, or service of any punishment, nor scheduled solely for the purpose of UCMJ action. This would constitute involuntary activation and would be authorized only in accordance with the procedures set out above.

B-8. Nonjudicial Punishment (Article 15)

a. Reserve Component soldiers may receive nonjudicial punishment pursuant to Article 15, UCMJ, while serving in a Title 10 status on AD, ADT, AT, or IDT. Reserve Component soldiers may be punished pursuant to Article 15 while serving on IDT provided that the proceedings are conducted and any punishment administered is served during normal IDT periods. Prior to taking such actions, RC commanders should consult with their supporting RC and AC staff or command judge advocate.

b. Either RC or AC commanders may impose Article 15 punishment on reserve enlisted soldiers of their commands.

c. Unless further restricted by higher authority, punishment for RC officers is reserved to the AC or RC GCMCA to whose command the RC officer is assigned or attached for disciplinary purposes or by commanding generals in the RC officer's chain of command.

B-9. Summary Court-Martial

a. Reserve Component soldiers may be tried by SCM while serving in a Title 10 status on AD, ADT, AT, or IDT. Reserve Component soldiers may be tried by SCM while serving on IDT provided that the trial is conducted and punishment is served during normal IDT periods.

b. Either RC or AC Summary Court-Martial Convening Authorities (SCMCA) may refer charges against RC soldiers to trial by SCM. An RC SCMCA may refer charges to SCM while on IDT; however, Article 25, UCMJ requires that the summary court officer must be on AD at the time of trial.

B-10. Special and General Courts-Martial

a. Reserve Component soldiers may be tried by special or general court-martial only while serving on AD. Remember the rules for ordering RC soldiers to AD discussed in B-5 above.

b. Only an AC GCMCA may refer charges against an RC soldier to a special or general court-martial. Courts-martial will normally be conducted at an AC US Army installation. An RC soldier will normally be attached to an AC installation for trial.

B-11. Forfeitures

Forfeitures imposed upon RC soldiers pursuant to Article 15 or court-martial action will be calculated in whole dollar amounts based on the base pay for an AC soldier of the same grade and time in service rather than on the basis of how much drill pay the RC soldier may have earned during the period of forfeiture.

NOTE

Definitive information pertaining to the military justice system is found in AR 27-10, Military Justice.

APPENDIX C

AVIATION MEDICINE

C-1. Purpose

Aviation assets provide significant combat power to the division by means of enhanced mobility and firepower. Ideally, the division surgeon should be a flight surgeon so as to fully comprehend the significant duties, responsibilities, and effects of aviation medicine on performance of the aviation mission. It is imperative that the division surgeon, who is not a flight surgeon, understand the significant duties and responsibilities that the flight surgeon performs in order to maximize the effects of these aviation assets.

C-2. Mission

a. It is the flight surgeon's duty to provide clinical, administrative, and supervisory medical support to the aviation unit to ensure individual health, flying safety, and mission accomplishment. The overall responsibilities of the flight surgeon and the aviation medicine program are similar in all units with aviation assets and do not change during peacetime or in any spectrum of conflict. The significance and the difficulties of performing the aviation medicine mission do change, however, during the transition from peacetime to wartime.

b. As stated previously, the goals, duties, and responsibilities for all aviation units are the same during peacetime and wartime and are not based on TOE. The TOE medical assets allocated to perform the aviation medicine mission will vary based on size and complexity of the aviation unit to be supported.

c. A physician must attend the seven-week Basic Army Aviation Medicine Course (BAAMC) at Fort Rucker, Alabama, to be designated a 61N9D (flight surgeon), regardless of his medical specialty.

d. Physician assistants may also attend the BAAMC. After successful completion of this course, they are designated aeromedical physician assistants (APAs).

e. A flight surgeon assigned to a larger unit may be qualified as an aerospace medicine specialist (61N9B). The aerospace medicine specialty is under the auspices of the American Board of Preventive Medicine. An Army physician must complete the BAAMC, serve as a unit flight surgeon, and complete a Master of Public Health program and a year of additional aviation medicine training in a residency program to become an aerospace medicine specialist.

C-3. Duties and Responsibilities

a. Clinical Care.

(1) The first duty of a flight surgeon is to provide treatment for soldiers who are on flight status. The normal standards of patient care apply. The second duty is to determine if the medical problem or its treatment will pose a danger to the patient in the aviation environment, or compromise flight safety or the aviation mission.

(2) Many of the medical conditions and treatments are specifically identified in AR 40-8, AR 40-501, and Aeromedical Policy Letters (APLs). Other conditions and treatments must be evaluated using clinical judgment and knowledge, and experience in the aviation environment.

(3) Clinical duties are inseparable from the administrative management of the aviation medicine clinic and the aviation medicine program. The division surgeon and the aviation unit flight surgeon must understand the basic administrative requirements of Army aviation medicine. They must–

- Perform flying duty medical examinations (FDMEs) IAW AR 40-501 and APLs.
- Review FDMEs performed by nonrated physicians and APAs IAW AR 40-501 and APLs.
- Provide acute medical care to aviation unit personnel IAW AR 40-8, AR 40-501, and APLs.
- Supervise the acute medical care provided to aviation unit personnel by nonrated physicians, APAs, and enlisted specialists IAW AR 40-8 and AR 40-501, to include–

• Ensuring DA Form 4186 (the "up slip") is used to document FDMEs and any change in flying status due to illness, injury, or medical treatment. Any physician or PA may recommend to a commander that he "ground" an individual on flight status and documents this action on a DA Form 4186.

• Documenting return-to-flight status after grounding by completing DA Form 4186. Only a flight surgeon can return an individual to flight status after a "grounding" DA Form 4186 has been issued. The flight surgeon does not need to be present to physically treat the grounded individual. The return-to-flying status may be done telephonically after consultation with the medical care provider. This telephonic return-to-flying status must be documented on the DA Form 4186.

• Provide preventive medical care to aviation unit personnel which would involve–

• During peacetime, the flight surgeon concentrating on immunizations, personal protective measures, unit and individual field sanitation practices, hearing conservation, smoking cessation programs, weight control, and preparation of the unit for its wartime mission.

• During wartime, the flight surgeon concentrating on field sanitation practices, personal protective measures, and ensuring that the unit's work and rest areas are as environmentally safe as possible. In any spectrum of conflict, preventive medicine activities to maintain the unit's combat effectiveness become more important and more difficult to perform.

• An awareness of the significant increase in laser, microwave, and electromagnetic-radiation sources in the US Army. The flight surgeon must know how to prevent and treat injury from these sources, as well as from ionizing radiation.

• Ensuring appropriate occupational medicine support for all unit personnel.

b. Administrative and Supervisory. The flight surgeon serves as the principal advisor to the aviation unit commander on all matters that affect the health of the unit. The aviation brigade flight surgeon serves as the principal advisor to the division surgeon on all matters that affect the health of the aviation brigade. The nonclinical duties of the flight surgeon are quite diverse, extremely important, and require the flight surgeon to be fully integrated into the aviation unit.

(1) *Safety.* The flight surgeon is an integral member of the unit's safety program to include education, training, life-support systems, and accident investigation. The unit safety program requires the flight surgeon to–

• Participate in all safety meetings and integrate safety consciousness into all of his interactions with aviation unit personnel. (See AR 385-95.)

• Supervise the training of personnel in the use of life-support equipment, especially the flight helmets for the Apache aircraft.

• Participate as a member of the accident investigation team. The flight surgeon is an important member of this team. Due to the intensity and demands of an accident investigation, the flight surgeon must be removed from all other duties during this time; therefore, a "call roster" of team members is mandated.

(2) *Aeromedical evacuation.* The flight surgeon will often be called on to advise and assist in the preparation of patients for aeromedical evacuation in both Army and Air Force aircraft. This requires a knowledge of the disease, condition of the patient, distance to be traveled, and type of aircraft to be used.

(3) *Military aviation medicine.* The flight surgeon must advise the aviation unit commander on all matters affecting the health of the unit. This role is nonspecific, difficult, and important. To perform this duty and exercise competent responsibility, the flight surgeon must be fully integrated into the unit and must understand the–

• Tactical employment and missions of the unit.

• Training of aviators and the stressors of modern combat flying techniques.

NOTE

Integration into the unit includes informal conversations with all unit personnel and frequent visits to the flight line to understand all aspects of the unit's mission. The flight surgeon must perform frequent flights under all conditions to be accepted as a member of the unit and to fully understand the health of the command. It is important to note that the flight surgeon is required to fly 4 hours a month and 60 hours a year for aviation career incentive pay and flight currency. (See AR 600-105, and AR 600-106.)

APPENDIX D

COMMAND AND STAFF FUNCTIONS AND ESTIMATES

D-1. Command and Staff

While the commander alone is responsible for all his unit does or fails to do, the exercise of command at higher levels requires the services of a highly-qualified, well-coordinated staff. The very nature of the military presupposes changes in staff personnel and commanders between various commands. While flexibility and an individual's desires are keystones in the exercise of command, certain terms, functions, records, and administrative aids are necessary and have to be sufficiently uniform to be applicable in all types of command and staff assignments. The material presented herein enables the commander to conduct the business of command and staff in an orderly and predictable fashion.

D-2. Staff Functions

a. The five common functions performed by all staff officers are to–

(1) Provide information.

(2) Make estimates.

(3) Make recommendations.

(4) Prepare plans and orders.

(5) Supervise.

b. Coordination, although not classified as one of the five functions, is an interrelated element to timely and successful accomplishment of each function.

D-3. Command and Staff Relationships

a. The application of inter- and intra-command and staff relationships is conducted through the use of four channels.

(1) Command.

(2) Staff.

(3) Technical.

(4) Noncommissioned officers.

b. Command channels are directive in nature, while staff and technical channels are advisory.

c. Noncommissioned officer channels, like the staff and technical channels, are used primarily for the exchange of information and not to supplant the normal chain of command.

d. Each commander defines to his staff and subordinates his policies on the use of these channels.

D-4. Administrative Aids

Administrative aids are policy files, records, journals, workbooks, and situation maps that facilitate staff actions.

a. Policy Files. A policy file summarizes the current policies of the commander and higher headquarters, and the basic operating principles for the staff section maintaining the file. It provides information on established policies and command guidance to allow subordinates to take immediate action on operational matters including the issuance of necessary implementing and coordinating instructions without reference to the commander. As a minimum, preparation of formal written policies should include (within the body) the following paragraphs:

(1) References.

(2) Purpose.

(3) Procedures.

- Who.
- What.
- Where.
- When.

(4) Coordinating instructions.

b. Records. Staff section records are essential to provide information for the commander and staff, for higher and lower headquarters, and for the unit or staff section historical record. The Modern Army Recordkeeping System (MARKS) is the only file system authorized by DA for use throughout the Army.

c. Daily Staff Journal. The DA Form 1594 is the official journal of chronological events affecting a staff section. The chief of staff (XO), and each staff section in a headquarters, regiment, group, and similar size unit, maintains a journal. In the CZ, battalions and separate companies maintain journals. Journals give a complete picture of the unit's operations for a given period and are a permanent record.

d. Workbooks. Workbooks are ready references for use in conducting current operations and in preparing reports. A staff section workbook is an indexed collection of information obtained from written or oral orders, messages, journal entries, and conferences. Workbooks are indexed to fit a staff section's particular needs.

e. Situation Maps. A situation map is a graphic presentation of the current situation. Each staff section keeps its situation map up to date by posting dispositions and activities that concern the section. In brigade and smaller headquarters, a combined situation map, kept under the supervision of the S3, may be sufficient.

D-5. Command and Staff Sequence of Action in Making and Executing Decisions

a. The nine steps in the sequence of actions in making and executing decisions are used as a guide to ensure orderly planning and preparation prior to and during the accomplishment of a mission or task (see Figure D-1). The steps are not formally announced but are considered by all.

b. Each step is normally accomplished progressively depending upon the availability of time and urgency of the situation. During the planning and execution stages, the steps are reapplied as required in order to adjust to revised information.

STEP #1 MISSION

a. Sources.

(1) Received.

(2) Developed.

(3) Deduced.

b. Uses.

(1) Review commander's analysis.

(2) Determine specified tasks.

(3) Determine implied tasks.

STEP #2 INFORMATION AVAILABLE

a. Sources.

(1) Plans, orders, and reports.

(2) Coordination with other agencies.

(3) Research.

(4) Briefings.

b. Uses.

(1) Staff.

(2) Commander.

(3) Subordinate staffs and commanders.

c. Methods of Conveying Information.

(1) Information briefings.

(2) Reports.

(3) Estimates.

(4) Directives.

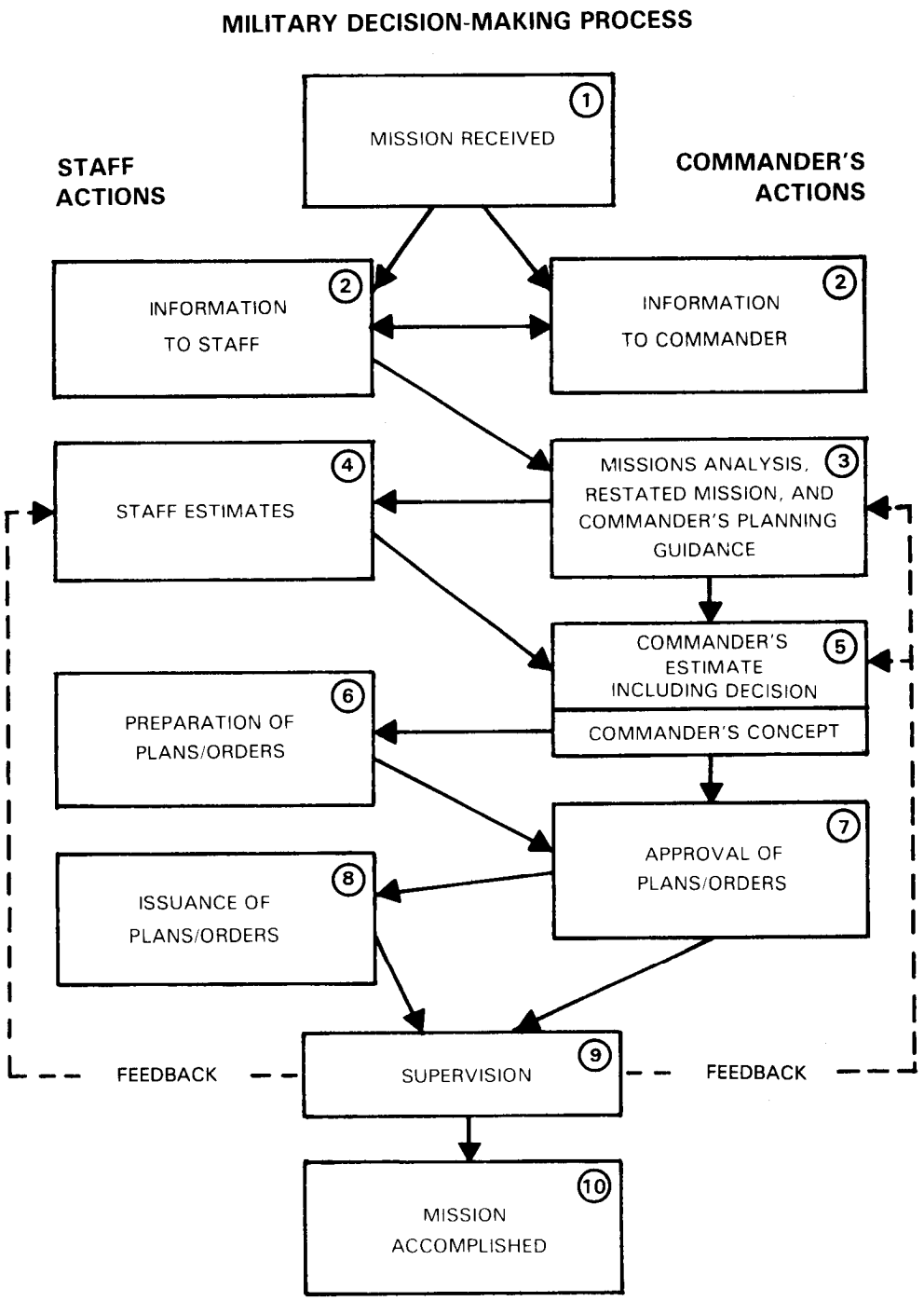

NOTE: IN SOME CRITICAL SITUATIONS THE COMMANDER MAY BE FORCED TO COMPLETE HIS ESTIMATE BASED ON HIS PERSONAL KNOWLEDGE OF THE SITUATION AND ISSUE ORAL ORDERS TO HIS SUBORDINATE UNITS.

Figure D-1. Military decision-making process.

(5) Plans and orders.

STEP #3 COMMANDER'S PLANNING GUIDANCE

a. Actions.

(1) Completes mission analysis.

(a) Identifies specified tasks.

(b) Identifies implied tasks.

(2) Issues initial planning guidance.

(a) Restates the mission.

(b) Outlines major actions.

(c) Outlines courses of action to develop or disregard.

(d) Specifies essential elements of information required.

(e) Specifies a reserve (if applicable).

(f) Specifies other CSS.

(g) Provides instructions to specific staff officers.

b. Uses. Command and staff activities.

STEP #4 STAFF ESTIMATES

a. Format and Major Paragraphs.

(1) Mission.

(2) Situation/consideration/course of action.

(3) Analysis.

(4) Comparison.

(5) Conclusion/recommendation.

(b) Actions.

(1) Staff prepares and coordinates.

(2) Presents to commander.

STEP #5 COMMANDER'S ESTIMATE

(a) Format and Major Paragraphs.

(1) Mission.

(2) Situation/consideration/course of action.

(3) Analysis.

(4) Comparison.

(5) Decision.

b. Actions.

(1) Considers staff conclusions and recommendations.

(2) Completes his estimate.

(3) Announces his decision.

(4) Provides concept of operation.

STEP #6 PREPARATION OF PLANS AND ORDERS

a. Formats (FM 101-5 and FM 8-55).

b. Actions Taken by Staff.

(1) Outlines plan/order.

(2) Coordinates with staff members.

(3) Provides input to responsible section(s).

STEP #7 APPROVAL OF PLANS/ORDERS

a. Format (Final Draft).

b. Actions.

(1) Plans and orders submitted to commander.

(2) Approved and modified.

(3) Commander and representative sign.

STEP #8 ISSUANCE OF PLANS/ORDERS

a. Publication.

b. Distribution.

c. Execution.

STEP #9 SUPERVISION

a. Command and Staff Supervise Concept.

b. Coordination.

c. Adjust as Directed.

D-6. Estimate of the Situation

a. General. Combat and CSS commanders and staff officers continually face mission-related problems involving uncertainties and possibilities for solution. They must make their conclusions, recommendations, and decisions based on sound judgment to ensure that the many factors which influence military operations receive logical and orderly consideration. The basic approach used is the estimate of the situation which is a logical, useful, and nonrigid format, and is applicable to any situation, echelon, or type of command. Naturally, knowledge, experience, and judgment will include the selection of the best of several feasible courses of action. The staff officer uses the appropriate estimate to determine the best courses of action for accomplishing a specified task, or to determine how factors in his particular area of interest will influence the courses of actions under consideration. Whereas all parts of the estimate are considered essential, the most significant information in each staff officer's estimate is found in his analysis, comparison and conclusion, and recommendation paragraphs. It is herein that each staff officer addresses information solely related to his area of interest, followed by the commander's estimate which includes a decision and concept. Because the CSS estimate is necessarily detailed, it is generally a written report which serves two purposes:

(1) To summarize the significant aspects of the situation, thereby assisting the commander in selecting a course of action.

(2) To evaluate and determine how the means available can best be used to accomplish the mission or task.

b. Definition. The estimate of the situation is a problem-solving process used to ensure that logical and orderly consideration is given to all factors affecting a mission and to arrive at a conclusion, recommendation, or decision on the course of action which offers the best possibility for success.

c. Types of Estimates and Content.

(1) Types of estimates.

- Intelligence.
- Personnel.
- Logistic.
- Medical.
- Civil-military operations.
- Operations.

NOTE

Other staff estimates may be used.

(2) Content. The basic format and content of most estimates consist of–

- Paragraph 1. Mission.

- Paragraph 2. Situation–Considerations–Courses of Action.
- Paragraph 3. Analysis.
- Paragraph 4. Comparison.
- Paragraph 5. Conclusions–Recommendations–Decision.

d. Course of Action Elements. The five elements of a course of action are–

(1) What–action to be taken.

(2) When–time-date-phase or on-order.

(3) Where–direction-area.

(4) How–CSS is to be applied.

(5) Why–purpose or reason.

e. Decision Elements. The six elements of a complete decision are–

(1) Who–unit(s).

(2) What–action to be taken.

(3) When–time-date-phase or on-order.

(4) Where–direction-area.

(5) How–CSS is to be applied.

(6) Why–purpose or reason.

f. Source of Information. Source of information for input to the estimates include–

(1) Mission (anticipated, received, developed).

(2) Staff information briefings.

(3) Commander's planning guidance.

(4) Staff and other agency coordination.

(5) Records, reports, plans, and orders.

(6) Research.

APPENDIX E

BRIEFINGS

E-1. Decision Briefing

The decision briefing is designed to obtain an answer or a decision. In higher headquarters, it is used for most matters requiring command decisions on administrative matters or to select a course of action during tactical operations. In division headquarters and below, a more informal modified type of the decision briefing is often used. The decision briefing is comparable to an oral staff study and generally follows the same sequence.

a. Introduction.

(1) Greeting. Use military courtesy, address the person(s) being briefed, and identify self.

(2) Purpose. State that the purpose of the briefing is to obtain a decision and announce the problem statement.

(3) Procedure. Explain any special procedures such as a trip to outlying facilities or introduction of additional briefers.

(4) Coordination. Indicate what coordination has been accomplished.

(5) Classification. State security classification and ensure all personnel in attendance have appropriate security clearance.

b. Body.

(1) Assumptions should have the following characteristics:

- Should not be facts (or statements of the obvious) but should be based on fact if the stated condition materializes.
- Should be written in future or conditional tense.
- May be used in the absence of fact to provide a basis for the study and to broaden or limit the scope of the discussion.
- Should state conditions that must exist if a specific plan is to be put into effect.
- Must be necessary for a logical discussion of the problem.
- Must have a direct bearing on the problem and the solution(s).

(2) Facts bearing on the problem. Must be supportable, relevant, and necessary.

(3) Discussion. Analyze courses of action. Plan for smooth transition.

(4) Conclusions. Degree of acceptance or the order of merit of each course of action.

(5) Recommendation(s). State action(s) recommended. Must be specific, not a solicitation of opinion.

c. Close.

(1) Ask for questions.

(2) Request a decision.

d. Follow up.

NOTE

Following the briefing, if the chief of staff is not present, the briefer must inform the staff secretary or XO of the commander's decision utilizing procedures prescribed by command SOP.

E-2. Information Briefing

The information briefing is designed to inform the listener. It deals primarily with facts and dues not include conclusions or recommendations. It is used to present high priority information requiring immediate attention; complex information involving complicated plans, systems, statistics, or charts; and controversial information requiring elaboration and explanation. Situation briefings that cover the tactical situation over a period of

time usually fall into this category. A good format is shown below:

a. Introduction.

(1) Greeting. Use military courtesy, address the person(s) being briefed, and identify self.

(2) Purpose. Explain the purpose and scope.

(3) Procedure. Indicate procedure if demonstration, display, or tour is involved.

b. Body.

(1) Arrange main ideas in logical sequence.

(2) Use visual aids to amplify important points and to clarify complex ideas. "Busy" visual aids are usually counterproductive to this purpose.

(3) Plan for effective transitions.

(4) Be prepared to answer questions at any time.

c. Close.

(1) Ask for questions.

(2) Concluding statement.

(3) Announce the next briefer, if any.

E-3. Briefing Checklist

a. Analysis of Situation.

(1) Audience.

(a) Who and how many.

(b) Official position.

(c) Knowledge of subject.

(d) Personal preferences.

(2) Purpose and type.

(3) Subject.

(4) Physical facilities.

(a) Location.

(b) Arrangements.

(c) Visual aids.

b. Schedule Preparations.

(1) Complete analysis.

(2) Prepare outline.

(3) Determine requirements.

(4) Schedule rehearsals.

(5) Arrange for final review.

c. Construct the Briefing.

(1) Complete analysis.

(2) Prepare outline.

(3) Determine requirements.

(4) Schedule rehearsals.

(5) Arrange for final review.

(a) Rehearse.

(b) Isolate key points.

(c) Memorize outline.

(d) Develop transitions.

(e) Use definitive words.

d. Delivery.

(1) Posture.

(a) Military bearing.

(b) Eye contact.

(c) Gestures and mannerisms.

(2) Voice.

(a) Pitch and volume.

(b) Rate and variety.

(c) Enunciation.

(3) Attitude.

(a) Business like.

(b) Confident.

(c) Helpful.

(4) Follow up.

(a) Ensure understanding.

(b) Record decision.

(c) Inform proper authorities.

APPENDIX F

HEALTH SERVICE ESTIMATE

(CLASSIFICATION)

Issuing Section and Headquarters
Place
Date, Time, and Zone

Health Service Estimate (Appendix B, FM 8-55)

References: Maps or overlays (as necessary for understanding of the estimate).

NOTE

This estimate will normally be presented orally (with an overlay) as opposed to a written presentation. When presenting orally, this format should be followed for the sake of organizing the briefing.

F-1. Mission

Restate the mission determined by the commander in step 3 of the sequence of command and staff actions (Chapter 5, FM 101-5).

F-2. Situations and Considerations

a. Intelligence Situation. This information is obtained from the intelligence officer. When the details make it appropriate and the estimate is written, a brief summary and reference to the appropriate intelligence document, or an annex of the applicable estimate, may be used. The following information should be included:

(1) Characteristic of the AO.

(2) Enemy strength and disposition.

(3) Enemy capabilities.

(a) Affecting tactical mission.

(b) Affecting medical activities.

(4) Endemic disease.

b. Tactical Situation. This information is obtained from the commander's planning guidance and from the operations officer and should—

(1) Present disposition of major elements and strength to be supported.

(2) Outline possible courses of action to accomplish the tactical mission. (These courses of action are carried forward through the remainder of the estimate.)

(3) Project operations, if known, and other planning factors as required for coordination and integration of staff estimates.

c. Personnel Situation. Present staffing of medical units and anticipated replacements. (This information may be obtained from the personnel estimate.)

d. Logistical Situation. Identify any logistical situation that might have an impact on medical support; for example, transportation of

medical supplies and equipment, and evacuation resources (transportation).

e. Civil-Military Operations Situation. This information is obtained from the CMO officer and should—

(1) Present disposition of CMO units and installations that have an affect on the medical situation.

(2) Project development within the CMO field likely to influence the operations, such as availability of civilian labor, civilian hospitals, and other medical facilities and organizations for use by the civilian population, EPWs, and US forces.

f. Health Service Situation. In this subparagraph, the status of HSS is shown under appropriate subheadings.

(1) *Casualty estimates.*

(a) Anticipated number of casualties.

(b) Distribution in space (where located).

(c) Distribution in time (evacuation times).

(d) Area of casualty density.

(e) Line of patient drift.

(2) *Health of the command.*

(a) Acclimation of troops.

(b) Presence of disease.

(c) Status of immunizations.

(d) Clothing and equipment.

(e) Morale unit cohesion.

(f) Fatigue, sleep loss.

(g) Percent of casualties; intensity of combat.

(h) Level of training, experience, leadership.

(i) Home front stressors.

(j) Other, as indicated.

(3) *Health service support.* A discussion of the HSS functions provided (all services [as applicable], EPW, and civilian population) would be included in this area and would include at least the following:

(a) Area medical support.

(b) Hospitalization.

(c) Medical evacuation.

(d) Medical supply, optical and maintenance.

(e) Laboratory.

(f) Preventive medicine.

(g) Veterinary.

(h) Combat stress control.

(i) Dental.

(j) Command and control.

(k) Blood support.

(l) Other, as appropriate.

g. Assumptions. Present any assumption required as a basis for initiating planning or preparing the estimate. Assumptions are modified as factual data when specific planning becomes available.

F-3. Analysis

Under each subheading and for each tactical course of action, when appropriate, analyze all HSS factors, indicating problems and deficiencies.

F-4. Comparison

a. Evaluate deficiencies, if any, with respect to the accomplishment of the mission, using those tactical courses of action listed in the commander's estimate.

b. Discuss the advantages and disadvantages of each tactical course of action under consideration from the medical standpoint. Include methods of overcoming deficiencies or modification required in each course of action.

F-5. Conclusions

a. Indicate whether the mission set forth in paragraph F-1 can be supported from the health service standpoint.

b. Indicate which proposed course or courses of action can best be supported from the health service standpoint.

c. Indicate the health service disadvantages of each proposed course of action not listed in b above.

d. List the major deficiencies that must be brought to the commander's attention. Include specific recommendations concerning the methods of eliminating or reducing the effect of these deficiencies.

e. Figure F-1 depicts the typical overlay of current medical unit and elements in the field. Figure F-2 depicts the typical overlay of Medical Force 2000 units and elements in the field.

/s/ _____
Surgeon

Annexes (as required)

Distribution

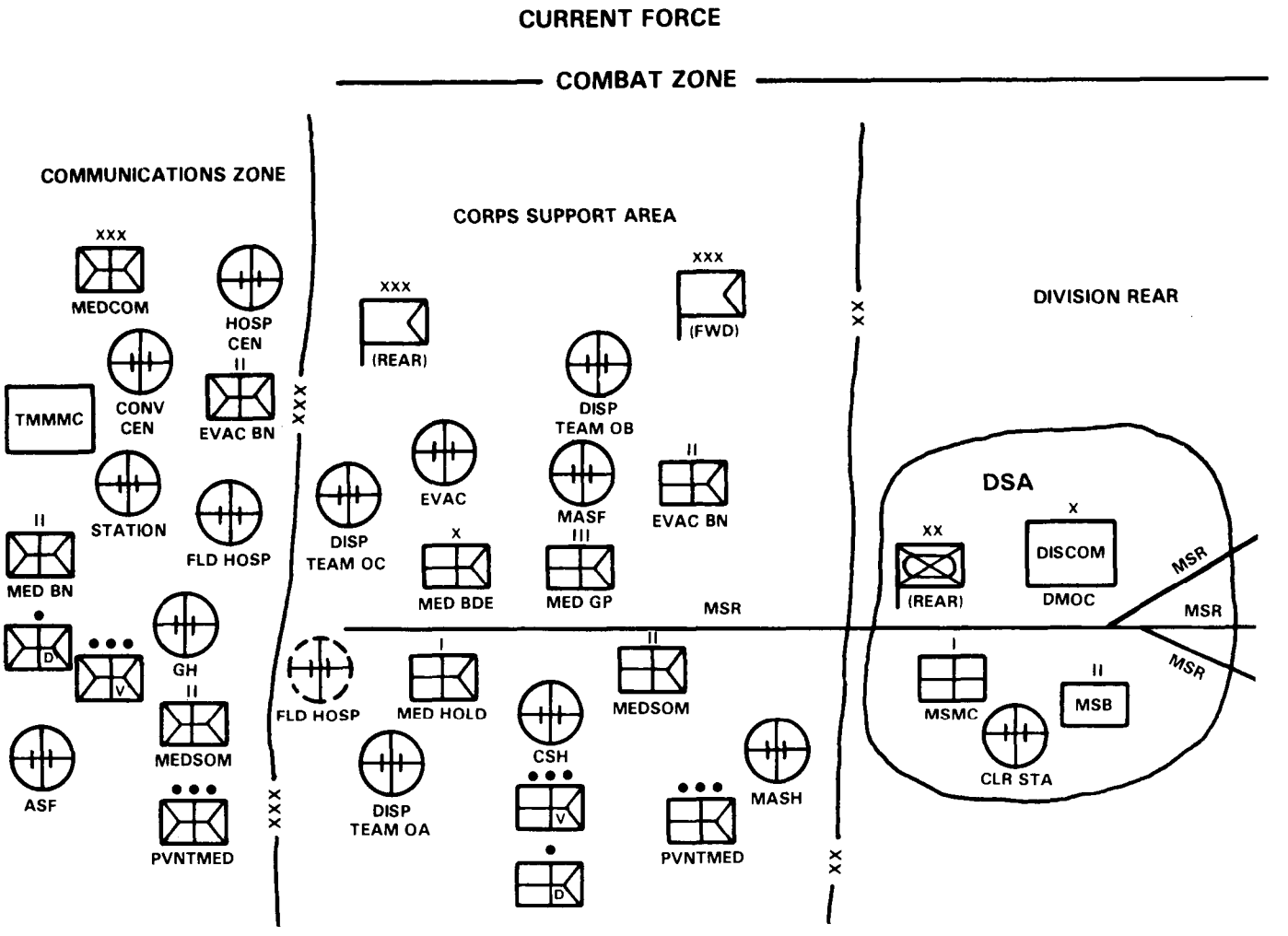

NOTE: THIS GRAPHIC REPRESENTS THE TYPES OF UNITS BUT DOES NOT REFLECT ACTUAL BASIS OF ALLOCATION.

LEGEND:

ASF—AEROMEDICAL STAGING FACILITY (UNITED STATES AIR FORCE)
AXP—AMBULANCE EXCHANGE POINT
BAS—BATTALION AID STATION
BDE TOC—BRIGADE TACTICAL OPERATIONS CENTER
BSA—BRIGADE SUPPORT AREA
CLR STA—CLEARING STATION
COLL PT—COLLECTION POINT
COMBAT TRAINS—THE PORTION OF UNIT TRAINS THAT PROVIDES COMBAT SERVICE SUPPORT
CONV CEN—CONVALESCENT CENTER
CSH—COMBAT SUPPORT HOSPITAL
DISCOM—DIVISON SUPPORT COMMAND
DISP TEAM OA—DISPENSARY, TEAM OA
DISP TEAM OB—DISPENSARY, TEAM OB
DISP TEAM OC—DISPENSARY, TEAM OC
DMOC—DIVISION MEDICAL OPERATIONS CENTER
DSA—DIVISION SUPPORT AREA
EVAC—EVACUATION HOSPITAL
EVAC BN—EVACUATION BATTALION
FIELD TRAINS—THE COMBAT SERVICE SUPPORT PORTION OF A UNIT AT COMPANY AND BATTALION LEVEL THAT IS NOT REQUIRED TO RESPOND IMMEDIATELY
FLD HOSP—FIELD HOSPITAL
FLOT—FORWARD LINE OF OWN TROOPS
FSB—FORWARD SUPPORT BATTALION
FSMC—FORWARD SUPPORT MEDICAL COMPANY
FWD—FORWARD
GH—GENERAL HOSPITAL
HOSP CEN—HOSPITAL CENTER
MASF—MOBILE AEROMEDICAL STAGING FACILITY
MASH—MOBILE ARMY SURGICAL HOSPITAL

Figure F-1. Typical overlay of current medical units and elements in the field.

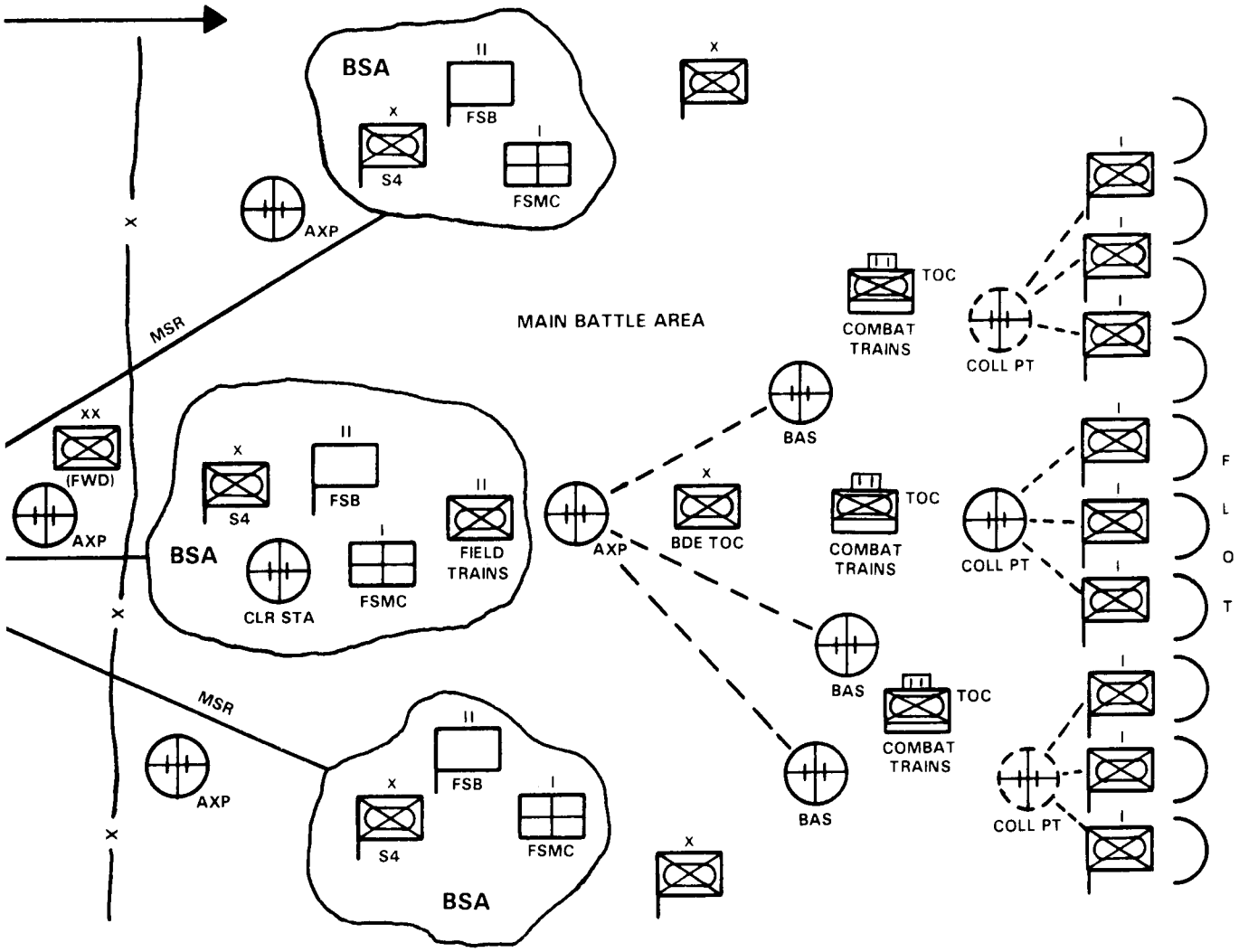

MED BDE—MEDICAL BRIGADE
MED BN—MEDICAL BATTALION
MEDCOM—MEDICAL COMMAND
MED GP—MEDICAL GROUP
MED HOLD—MEDICAL HOLDING
MEDSOM—MEDICAL SUPPLY, OPTICAL, AND MAINTENANCE
MSB—MAIN SUPPORT BATTALION
MSMC—MAIN SUPPORT MEDICAL COMPANY
MSR—MAIN SUPPLY ROUTE
PVNTMED—PREVENTIVE MEDICINE
REAR—REAR
S4—SUPPLY OFFICER (U.S. ARMY)
STATION—STATION HOSPITAL
TMMMC—THEATER MEDICAL MATERIEL MANAGEMENT CENTER
TOC—TACTICAL OPERATIONS CENTER
D—DENTAL
V—VETERINARY

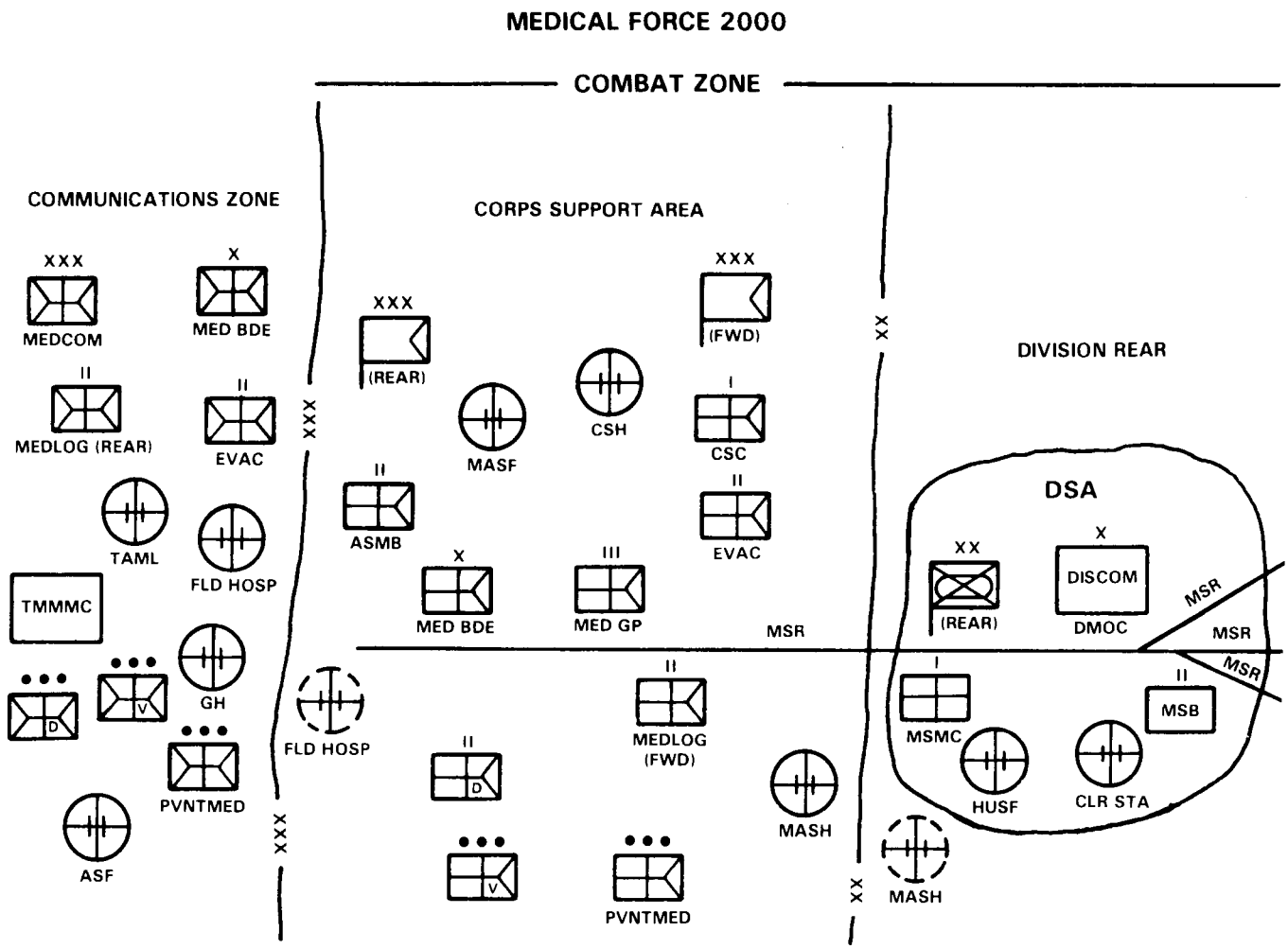

NOTE: THIS GRAPHIC REPRESENTS THE TYPES OF UNITS BUT DOES NOT REFLECT ACTUAL BASIS OF ALLOCATION.

LEGEND:

ASF—AEROMEDICAL STAGING FACILITY (UNITED STATES AIR FORCE)
ASMB—AREA SUPPORT MEDICAL BATTALION
AXP—AMBULANCE EXCHANGE POINT
BAS—BATTALION AID STATION
BDE TOC—BRIGADE TACTICAL OPERATIONS CENTER
BSA—BRIGADE SUPPORT AREA
CLR STA—CLEARING STATION
COLL PT—COLLECTION POINT
COMBAT TRAINS—THE PORTION OF UNIT TRAINS THAT PROVIDES COMBAT SERVICE SUPPORT
CSC—COMBAT STRESS CONTROL
CSH—COMBAT SUPPORT HOSPITAL
DISCOM—DIVISON SUPPORT COMMAND
DMOC—DIVISION MEDICAL OPERATIONS CENTER
DSA—DIVISION SUPPORT AREA
EVAC—EVACUATION BATTALION
FIELD TRAINS—THE COMBAT SERVICE SUPPORT PORTION OF A UNIT AT COMPANY AND BATTALION LEVEL THAT IS NOT REQUIRED TO RESPOND IMMEDIATELY
FLD HOSP—FIELD HOSPITAL
FLOT—FORWARD LINE OF OWN TROOPS
FSB—FORWARD SUPPORT BATTALION
FSMC—FORWARD SUPPORT MEDICAL COMPANY

Figure F-2. Typical overlay of Medical Force 2000 units and elements in the field.

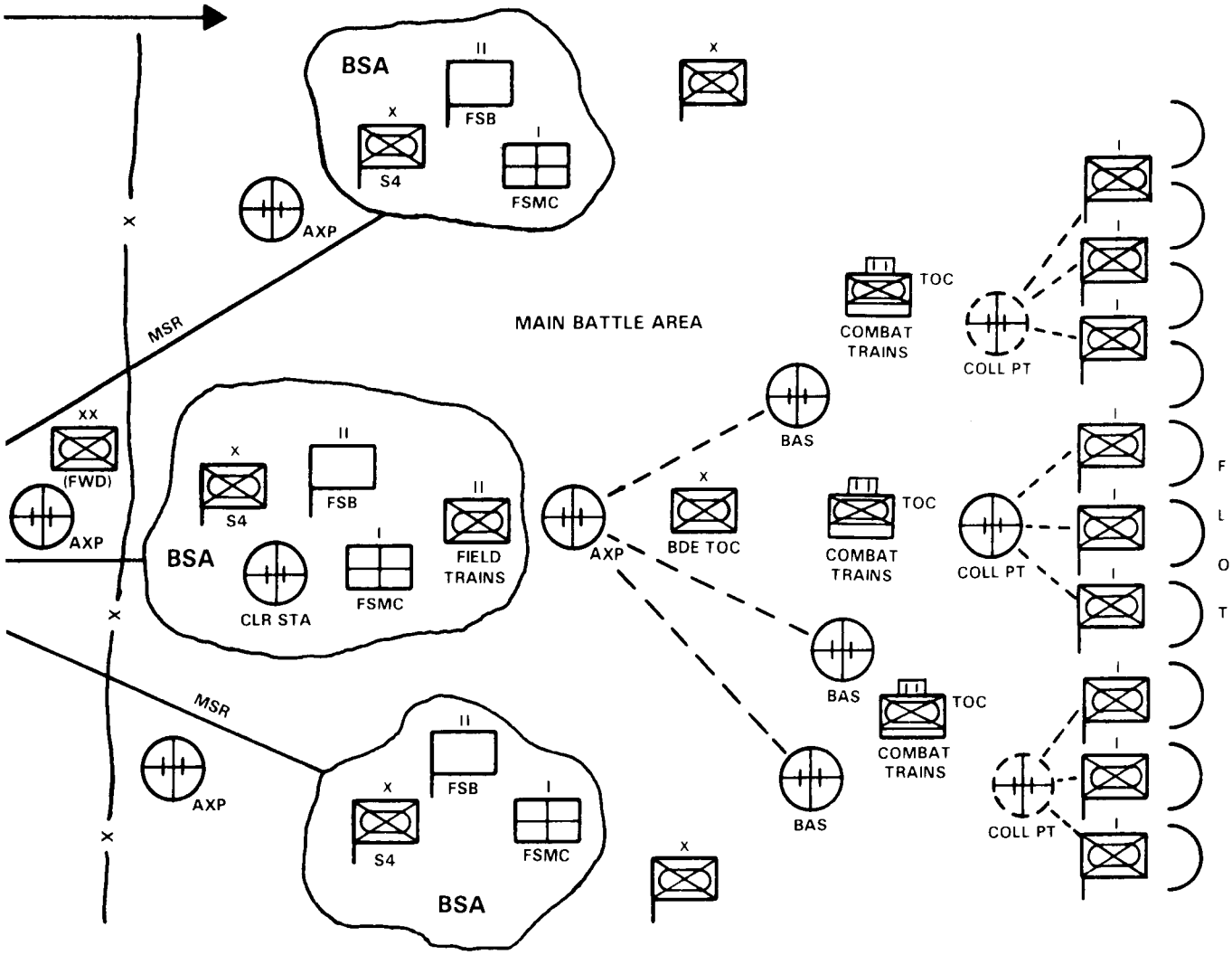

FWD—FORWARD
GH—GENERAL HOSPITAL
HUSF—HOSPITAL UNIT SURGICAL FORWARD (MASH ELEMENT)
MASF—MOBILE AEROMEDICAL STAGING FACILITY
MASH—MOBILE ARMY SURGICAL HOSPITAL
MED BDE—MEDICAL BRIGADE
MEDCOM—MEDICAL COMMAND
MED GP—MEDICAL GROUP
MEDLOG—MEDICAL LOGISTICS BATTALION
MSB—MAIN SUPPORT BATTALION
MSMC—MAIN SUPPORT MEDICAL COMPANY
MSR—MAIN SUPPLY ROUTE
PVNTMED—PREVENTIVE MEDICINE
REAR—REAR
S4—SUPPLY OFFICER (U.S. ARMY)
TAML—THEATER ARMY MEDICAL LABORATORY
TMMMC—THEATER MEDICAL MATERIEL MANAGEMENT CENTER
TOC—TACTICAL OPERATIONS CENTER
D—DENTAL
V—VETERINARY

GLOSSARY

ACRONYMS, ABBREVIATIONS, AND DEFINITIONS

A2C2 *See* Army airspace command and control

AB aviation brigade

ABN airborne

AC Active Component

ACofS Assistant Chief of Staff

ACR armored cavalry regiment

ACTY activity

AD active duty

ADA air defense artillery

ADMIN administration

ADT active duty for training

advanced trauma management This is the resuscitative and stabilizing medical or surgical treatment provided to patients to save life or limb and to prepare them for further evacuation without jeopardizing their well-being or prolonging the state of their condition.

AGR Active Guard Reserve

ALO air liaison officer

AMB ambulance

ambulance exchange point A point in an ambulance shuttle system where a patient is transferred from one ambulance to another en route to a medical treatment facility.

AMCO aircraft maintenance company

AMEDD Army Medical Department

AO *See* area of operations

AOC area of concentration

APA aeromedical physician assistant

APL Aeromedical Policy Letter

AR Army regulation

area of operations That portion of an area of conflict necessary for military operations. Areas of operations are geographical areas assigned to commanders for which they have responsibility and in which they have authority to conduct military operations.

ARMD armored

Army airspace command and control The effort necessary to coordinate airspace users for concurrent employment in the accomplishment of assigned missions.

Army airspace command and control element An Army element within the corps Army airspace command and control element, the division Army airspace command and control element, and the separate brigade Army airspace command and control element tactical operations centers responsible for the coordination, integration, and regulation of airspace within the organization's area of territorial responsibility. It coordinates directly with Air Force elements and functional Army elements (air defense artillery, Army aviation, fire support element) working within each tactical operations center.

ARTEP Army Training Evaluation Program

ASL *See* authorized stockage list

ASLT assault

assign To place units or personnel in an organization where such placement is relatively permanent, and/or where such organization controls, administers, and provides logistical support to units or personnel for the primary function, or greater portion of the functions, of the unit or personnel. *(See also* attach; operational control; operational command; organic.)

ASST assistant

AT annual training

ATK attack

ATM *See* advanced trauma management

ATMS Army Training Management System

attach The temporary placement of units or personnel in an organization. Subject to limitations imposed by the attachment order, the commander of the formation, unit, or organization receiving the attachment will exercise the same degree of command and control thereover as he does over units and persons organic to his command. However, the responsibility for transfer and promotion of personnel will normally be retained by the parent formation, unit, or organization. *(See also* assign; operational control; operational command; organic.)

augmentation The addition of specialized personnel and/or equipment to a unit.

authorized stockage list A list of items from *all* classes of supply authorized to be stocked at a specific echelon of supply.

AVN aviation

AWOL absent without leave

AXP *See* ambulance exchange point

BAAMC Basic Army Aviation Medicine Course

BAS battalion aid station

basic load For other than ammunition, basic loads are supplies kept by using units for use in combat. The quantity of each item of supply in a basic load is related to the number of days in combat the unit may be sustained without resupply.

BCD bad conduct discharge

BCSCC brigade combat stress control coordinator

BDAR battle damage assessment and repairs

BDE brigade

BF battle fatigue

BFC battle fatigue casualty

BN battalion

boundary A control measure normally drawn along identifiable terrain features and used to delineate areas of tactical responsibility for subordinate units. Within their boundaries, units may maneuver within the overall plan without close coordination with neighboring units unless otherwise restricted. Direct fire may be placed across boundaries on clearly-identified enemy targets without prior coordination, provided friendly forces are not endangered. Indirect fire also may be used after prior coordination.

Lateral boundaries are used to control combat operations of adjacent units.

Rear boundaries are established to facilitate command and control.

BR branch

brigade support area A designated area in which combat service support elements from division support command and corps support command provide logistic support to a brigade. The brigade support area normally is located 20 to 25 kilometers behind the forward edge of the battle area.

BSA *See* brigade support area

BTC Blood Transshipment Center

built-up area A concentration of structures, facilities, and population.

C chief

C2 *See* command and control

camouflage The use of concealment and disguise to minimize detection or identification of troops,

weapons, equipment, and installations. It includes taking advantage of the immediate environment as well as using natural and artificial materials.

casualty Any person who is lost to his organization by reason of having been declared dead, wounded, injured, diseased, interned, captured, retained, missing in action, beleaguered, besieged, or detained.

CAV cavalry

CBT combat

CDR commander

CE Communications-Electronics

CEN center

CH chaplain

chain of command The succession of commanding officers from a superior to a subordinate through which command is exercised. Also called *command channel.*

CHAN channel

CHE Continuing Health Education

CHEM chemical

chemical agent A chemical substance intended for use in military operations to kill, seriously injure, or incapacitate man through its physiological effects. Excluded are riot control agents, herbicides, smoke, and flame.

clearing station An operating field medical facility established by a clearing company or medical company which provides emergency or resuscitative treatment for patients until evacuated and definitive treatment for patients with minor illness, wounds, or injuries.

CLK clerk

CLR STA *See* clearing station

CMD command

CMO civil-military operation

CO company

CofS Chief of Staff

collecting point (health services) A specific location where casualties are assembled to be transported to a medical treatment facility; for example, a company aid post.

combat intelligence That knowledge of the enemy, weather, and geographical features required by a commander in planning and conducting combat operations. It is derived from the analysis of information on the enemy's capabilities, intentions, vulnerabilities, and the environment.

combat maneuver forces Those forces which use fire and movement to engage the enemy with direct fire weapon systems, as distinguished from those forces which engage the enemy with indirect fires or otherwise provide combat support. These elements are primarily infantry, armor, cavalry (air and armored), and aviation.

combat medic A medical specialist trained in emergency medical treatment procedures and assigned or attached in support of a combat or combat support unit.

combat service support The support provided to sustain combat forces, primarily in the fields of administration and logistics. It may include administrative services, chaplain service, civil affairs, food service, finance, legal service, maintenance, medical service, military police, supply, transportation, and other logistical services. The basic mission of combat service support is to develop and maintain maximum combat power through the support of weapons systems.

combat stress control A coordinated program, conducted by unit mental health personnel plus echelon above division combat stress control units, for the prevention, triage and

treatment at each echelon of battle fatigue to maximize rapid return to duty and minimize misconduct combat stress reactions and post-traumatic stress disorders.

combat support Fire support and operational assistance provided to combat elements. May include artillery, air defense, aviation (less air cavalry and attack helicopter), engineer, military police, signal, and electronic warfare.

combat trains The portion of unit trains that provides the combat service support required for immediate response to the needs of forward tactical elements. At company level, medical, recovery, and maintenance elements normally constitute the combat trains. At battalion, the combat trains normally consist of ammunition and POL vehicles, maintenance/recovery vehicles and crews, and the battalion aid station. *(See also* field trains; unit trains.)

combat zone That area required by combat forces for the conduct of operations. It is the territory forward of the Army rear area boundary.

COMDT commandant

COMM communications

command and control The exercise of command that is the process through which the activities of military forces are directed, coordinated, and controlled to accomplish the mission. This process encompasses the personnel, equipment, communications, facilities, and procedures necessary to gather and analyze information, to plan for what is to be done, and to supervise the execution of operations.

commander's estimate The procedure whereby a commander decides how to best accomplish the assigned mission. It is a thorough consideration of the mission, enemy, terrain and weather, troops available, and time and other relevant factors. The commander's estimate is based on personal knowledge of the situation and on staff estimates.

commander's intent Commander's vision of the battle–how he expects to fight and what he expects to accomplish. *(See also* concept of operations.)

command group A small party that accompanies the commander when he departs the command post to be present at a critical action. The party is organized and equipped to suit the commander, and normally provides local security and other personal assistance for the commander as he requires.

command post The principal facility employed by the commander to command and control combat operations. A command post consists of those coordinating and special staff activities and representatives from supporting Army elements and other services that may be necessary to carry out operations. Corps and division headquarters are particularly adaptable to organization by echelon into a tactical command post, a main command post, and a rear command post.

communications security The protection resulting from all measures designed to deny unauthorized persons information of value that might be derived from the possession and study of telecommunications, or to mislead unauthorized persons in their interpretation of the results of such possession and study. Includes cryptosecurity, transmission security, emission security, and physical security of communications security materials and information.

communications zone That rear area of the theater of operations, behind but contiguous to the combat zone, that contains the lines of communication, establishments for supply and evacuation, and other agencies required for the immediate support and maintenance of the field forces.

COMMZ *See* communications zone

concealment The protection from observation.

concept of operations A graphic, verbal, or written statement in broad outline that gives an overall picture of a commander's assumptions or intent in regard to an operation or a

series of operations; includes, at a minimum, the scheme of maneuver and fire support plan. The concept of operations is embodied in campaign plans and operations plans, particularly when the plans cover a series of connected operations to be carried out simultaneously or in succession. It is described in sufficient detail for the staff and subordinate commanders to understand what they are to do and how to fight the battle without further instructions.

CONUS continental United States

COSCOM corps support command

CPR cardiopulmonary resuscitation

CPX command post exercise

CS *See* combat support

CSC *See* combat stress control

CSCP combat stress control preventive

CSCR combat stress control restoration

CSM Command Sergeant Major

CSS *See* combat service support

CTA common table of allowances

CTG command training guidance

CTT common task training

CZ combat zone

DA Department of the Army

DA Pam Department of the Army Pamphlet

DEPEX deployment exercise

DHS Director of Health Services

direct support (1) A mission requiring a force to support another specific force and authorizing it to answer directly the supported force's request for assistance. (2) In the North Atlantic Treaty Organization, the support provided by a unit or formation not attached to, nor under command of, the supported unit or formation, but required to give priority to the support required by that unit or formation. *(See also* general support.)

DISCOM division support command

DISP disposition

displace To leave one position and take another. Forces may be displaced laterally to concentrate combat power in threatened areas.

DIV division

DIVARTY division artillery

division clearing station *See* clearing station.

division support area An area normally located in the division rear positioned near air landing facilities and along the main supply route. The division support area contains the division support command command post, the headquarters elements of the division support command battalions, and those division support command elements charged with providing backup support to the combat service support elements in the brigade support area and direct support to units located in the division rear. Selected corps support command elements may be located in the division support area to provide direct support backup and general support as required.

DMHS division mental health section

DMMC division materiel management center

DMOC division medical operations center

DMSO division medical supply office

DNBI disease and nonbattle injury

DSA *See* division support area

EAC *See* echelons above corps

Echelon I (Level I) Unit level–first medical care a soldier receives is provided at this level. This care includes immediate life saving measures, advanced trauma management, disease prevention, combat stress control prevention, casualty collection, and evacuation from supported unit to supporting medical treatment. Echelon I elements are located throughout the combat and communications zones. These elements include the combat lifesavers, combat medic, and battalion aid station. Some or all of these elements are found in maneuver, combat support, and combat service support units. When Echelon I is not present in a unit, this support is provided to that unit by Echelon II medical units.

Echelon II (Level II) Duplicates Echelon I and expands services available by adding dental, laboratory, x-ray, and patient holding capabilities. Emergency care, advanced trauma management, including beginning resuscitation procedures, is continued. (No general anesthesia is available.) If necessary, additional emergency measures are instituted; however, they do not go beyond the measures dictated by the immediate needs. Echelon II units are located in the combat zone—brigade support area, the corps support area, and communications zone. Echelon H medical support may be provided by a clearing station; forward support medical company; main support medical company; medical company, forward support battalion; medical company, main support battalion; corps area medical companies; area support medical company (Medical Force 2000); and communications zone medical companies.

Echelon III (Level III) This echelon of support expands the support provided at Echelon II (division level). Casualties who are unable to tolerate and survive movement over long distances will receive surgical care in hospitals as close to the division rear boundary as the tactical situation will allow. Surgical care may be provided within the division area under certain operational conditions. Echelon III characterizes the care that is provided by units such as mobile army surgical hospitals, combat support hospitals, and evacuation hospitals. Operational conditions may require Echelon III units to locate in offshore support facilities, third country support base, or in the communications zone.

Echelon IV (Level IV) This echelon of care is provided in a general hospital and in other communications zone-level facilities which are staffed and equipped for general and specialized medical and surgical treatment. This echelon of care provides further treatment to stabilize those patients requiring evacuation to continental United States. This echelon also provides area health service support to soldiers within the communications zone.

echeloned displacement Movement of a unit from one position to another without discontinuing performance of its primary function. Normally, the unit divides into two functional elements (base and advance); and, while the base continues to operate, the advance element displaces to a new site where, after it becomes operational, it is joined by the base element.

echelonment An arrangement of personnel and equipment into assault, combat follow up, and rear components or groups.

echelon of care This is a North Atlantic Treaty Organization term which can be used interchangeably with the term *level of care.*

echelons above corps Army headquarters and organizations that provide the interface between the theater commander (joint or combined) and the corps for operational matters, and between the continental United States/host nation and the deployed corps for combat service support. Operational echelons above corps may be United States only or allied headquarters while echelons above corps for combat service support will normally be United States national organizations.

EFMB Expert Field Medical Badge

emergency medical treatment The immediate application of medical procedures to the wounded, injured, or sick by specially trained medical personnel.

EMT *See* emergency medical treatment

ENGR engineer

EPW enemy prisoner of war

essential elements of friendly information The critical aspects of a friendly operation that, if known by the enemy, would subsequently compromise, lead to failure, or limit success of the operation and, therefore, must be protected from enemy detection.

EVAC *See* evacuation

evacuation (1) A combat service support function which involves the movement of recovered materiel from a main supply route, maintenance collecting point, and maintenance activity to higher levels of maintenance. (2) The process of moving any person who is wounded, injured, or ill to and/or between medical treatment facilities.

evacuation policy A command decision indicating the length in days of the maximum period of noneffectiveness that patients may be held within the command for treatment. Patients who, in the opinion of an officiating medical officer, cannot be returned to duty status within the period prescribed are evacuated by the first available means, provided the travel involved will not aggravate their disabilities.

FASCO Forward Area Support Coordination Officer

FAST forward area support team

FDME flying duty medical examination

FEBA *See* forward edge of the battle area

field trains The combat service support portion of a unit at company and battalion levels that is not required to respond immediately. At company level, supply and mess teams normally are located in the field trains. A battalion's field trains may include mess teams, a portion of the supply section of the support platoon, and a maintenance element, as well as additional ammunition and POL. Positioning field trains is dependent on such factors as the type of friendly operation underway, available suitable terrain, and intensity of enemy activity in the area. *(See also* combat trains; unit trains.)

FLOT *See* forward line of own troops

FM field manual/frequency modulated

FMC Field Medical Card

forward edge of the battle area The forward limit of the main battle area. *(See also* main battle area.)

forward line of own troops A line that indicates the most forward positions of friendly forces in any kind of military operation at a specific time. The forward line of own troops may be at, beyond, and short of the forward edge of the battle area, depicting the nonlinear battlefield.

fragmentary order An abbreviated form of an operation order used to make changes in mission to units and to inform them of changes in the tactical situation.

FSB forward support battalion

FSCOORD fire support coordinator

FSMC forward support medical company

FTX field training exercise

FWD forward

G1 Assistant Chief of Staff (Personnel)

G2 Assistant Chief of Staff (Intelligence)

G3 Assistant Chief of Staff (Operations and Plans)

G4 Assistant Chief of Staff (Logistics)

GCM general court-martial

GCMCA General Court-Martial Convening Authority

general support Support that is given to the supported force as a whole and not to any particular subdivision thereof.

GRREG graves registration

health service support (also health services) All support services performed, provided, or arranged by the Army Medical Department to promote, improve, conserve, or restore the mental and/or physical well-being of personnel in the Army and, as directed, in other Services, agencies, and organizations. These services include, but are not limited to, the management of health service resources such as manpower, monies, and facilities; preventive and curative health measures; the health service doctrine; evacuation of the sick (physically and mentally), injured, and wounded; selection of the medically fit and disposition of the medically unfit; medical supply, equipment, and maintenance thereof; and medical, dental, veterinary, laboratory, optometric, and medical food services.

HHC headquarters and headquarters company

HHD headquarters and headquarters detachment

HLDG holding

HLTH health

HQ headquarters

HSS *See* health service support

IAW in accordance with

IDS intermediate direct support

IDSM intermediate direct support maintenance

IDT inactive duty training

IG inspector general

INF infantry

information requirements Those items of information regarding the enemy and his environment which need to be collected and processed in order to meet the intelligence requirements of a commander.

INTEL *See* intelligence

intelligence The product resulting from the collection, evaluation, analysis, integration, and interpretation of all available information concerning an enemy force, foreign nations, or areas of operations and which is immediately or potentially significant to military planning and operations. *(See also* combat intelligence.)

intelligence preparation of battlefield A systematic approach to analyzing the enemy, weather, and terrain in a specific geographic area. It integrates enemy doctrine with the weather and terrain as they relate to the mission and the specific battlefield environment. This is done to determine and evaluate enemy capabilities, vulnerabilities, and probable courses of action.

IPB *See* intelligence preparation of battlefield

LBE load bearing equipment

LID light infantry division

lines of communication All the routes (land, water, and air) that connect an operating military force with one or more bases of operations and along which supplies and military forces move.

LO lubrication order

local security Those security elements established in the proximity of a unit to prevent surprise by the enemy.

logistics The planning and carrying out of the movement and the maintenance operations which deal with (1) design and development, acquisition, storage, movement, distribution, maintenance, evacuation, and disposition of material; (2) movement, evacuation, and hospitalization of personnel; (3) acquisition or

construction, maintenance, operation, and disposition of facilities; and, (4) acquisition or furnishing of services.

LT light

MACOM major Army command

main battle area That portion of the battlefield extending rearward from the forward edge of the battle area and in which the decisive battle is fought to defeat the enemy attack. Designation of the main battle area includes the use of lateral and rear boundaries. For any particular command, this area extends from the forward edge of the battle area to the rear boundaries of those units comprising its main defensive forces. *(See also* forward edge of the battle area.)

MAINT maintenance

MAPEX map exercise

MARKS The Modern Army Record-keeping System

MAT materiel

MC Medical Corps

MCM Manual for Court-Martial

MCO movement control office(r)

MCSB misconduct combat stress behavior

MECH/M mechanized

MED medical

MEDCOM medical command

MEDDAC medical department activity

medical equipment set A chest containing medical instruments and supplies designed for specific table(s) of organization and equipment units or missions.

medical intelligence That intelligence produced from the collection, evaluation, and analysis of information concerning the medical aspects of foreign areas which have immediate or potential impact on policies, plans, and operations.

medical treatment facility Any facility established for the purpose of providing medical treatment. This includes aid stations, clearing stations, dispensaries, clinics, and hospitals.

MEDLOG medical logistics

MEDSOM medical supply, optical, and maintenance

MEDSTEP Medical Standby Equipment Program

METL mission essential task list

METT-T mission, enemy, terrain, troops, and time available

MGT management

MI military intelligence

MOS military occupational specialty

MOSC military occupational specialty code

MP military police

MPRJ Military Personnel Records Jacket, US Army

MPT medical proficiency training

MRO medical regulating officer

MS Medical Service Corps

MSB main support battalion

MSMC main support medical company

MTF *See* medical treatment facility

MTOE modification table of organization and equipment

MTP mission training plan

MUSARC Major United States Army Reserve Command

NATO North Atlantic Treaty Organization

NBC nuclear, biological, and chemical

NCO noncommissioned officer

NGLO navel gunfire liaison officer

NP neuropsychiatric

NRTD nonreturn to duty

OFC office

OFF officer

OMPF official military personnel file

OP operator/operations

OPCOM *See* operational command

OPCON *See* operational control

operational command North Atlantic Treaty Organization: The authority granted to a commander to assign missions or tasks to subordinate commanders, to deploy units, to reassign forces, and to retain or delegate operational and/or tactical control as may be deemed necessary. It does not of itself include responsibility for administration or logistics. May also be used to denote the forces assigned to a commander. Department of Defense: The term is synonymous with operational control and is uniquely applied to the operational control exercised by the commanders of unified and specified commands over assigned forces in accordance with the National Security Act of 1947, as amended and revised (10 United States Code 124). *(See also* operational control.)

operational control The authority delegated to a commander to direct forces assigned so that the commander may accomplish specific missions or tasks that are usually limited by function, time, or location; to deploy units concerned, and to retain or assign tactical control of those units. It does not of itself include administrative or logistic control. In the North Atlantic Treaty Organization, it does not include authority to assign separate employment of components of the units concerned. *(See also* assign; attach; operational command.)

operation annexes Those amplifying instructions which are of such a nature, or too voluminous or technical, to be included in the body of the plan or order.

operation map A map showing the location and strength of friendly forces involved in an operation. It may indicate predicted movement and location of enemy forces.

operation order A directive issued by a commander to subordinate commanders for effecting the coordinated execution of an operation; includes tactical movement orders. *(See also* operation plan.)

operation overlay Overlay showing the location, size, and scheme of maneuver/fires of friendly forces involved in an operation. As an exception, it may indicate predicted movements and locations of enemy forces.

operation plan A plan for a military operation. It covers a single operation or series of connected operations to be carried out simultaneously or in succession. It implements operations derived from the campaign plan. When the time and/or conditions under which the plan is to be placed in effect occur, the plan becomes an operation order. *(See also* operation order.)

operations security All measures taken to maintain security and achieve tactical surprise. It includes countersurveillance, physical security, signal security and information security. It also involves the identification and elimination or control of indicators which can be exploited by hostile intelligence organizations.

OPLAN *See* operation plan

OPORD *See* operation order

OPT optometry

order A communication-written, oral, or by signal-that conveys instructions from a superior to a subordinate. In a broad sense, the terms *order* and *command* are synonymous. However, an order implies discretion as to the details of execution whereas a command does not.

organic Assigned to and forming an essential part of a military organization; an element normally shown in the unit's table of organization and equipment. *(See also* assign; attach; operational control.)

ORT operational readiness training

OTH other than honorable conditions

P&A personnel and administration

PA physician assistant

PAC Personnel and Administration Center

PAD patient administration

PAO public affairs office(r)

patient A sick, injured, or wounded person who receives medical care or treatment from medically trained (MOS- or AOC-specific) personnel.

PBO property book officer

PDS personnel daily summary

PIES proximity, immediacy, expectancy, and simplicity

PLL prescribed load list

PLT platoon

PM provost marshal

PMCS preventive maintenance checks and services

PNT *See* patient

PTSD post-traumatic stress disorders

PVNTMED preventive medicine

RC Reserve Components

rear area The area in the rear of the combat and forward areas. Combat echelons from the brigade through the field Army normally designate a rear area. For any particular command, that area extending rearward from the rear boundary of their next subordinate formations or units deployed in the main battle or defense area to their own rear boundary. It is here that reserve forces of the echelon are normally located. In addition, combat support and combat service support units and activities locate in this area. *(See also* brigade support area; division support area.)

RECON reconnaissance

reconstitution The total process of keeping the force supplied with various supply classes, services, replacement personnel, and equipment required. This process maintains the desired level of combat effectiveness and restores units that are not combat effective to the desired level through the replacement of critical equipment and personnel. Reconstitution encompasses unit regeneration and sustaining support.

RPTS reports

RTD return to duty

S1 Adjutant (Personnel Officer)

S2 Intelligence Officer

S3 Operations and Training Officer

S4 Supply Officer

S5 Civil Affairs Officer

S&T supply and transport

SCM summary court-martial

SCMCA Summary Court-Martial Convening Authority

SEC section

SGS Secretary of the General Staff

SGT sergeant

SIG signal

SINGL single

SJA Staff Judge Advocate

SKO sets, kits, and outfits

SOP standing operating procedure

SP specialist

SPCM special court-martial

SPT support

SQD squad

SQDN squadron

SQT skill qualification test

SR senior

STANAG *See* Standardization Agreement

Standardization Agreement The North Atlantic Treaty Organization consists of 15 member nations allied together for military interoperability in both equipment and methods of operations. As each Standardization Agreement is adopted, it becomes part of each nation's unilateral procedures and is incorporated into national doctrinal and procedural publications.

STX situational training exercise

SUP supply

supply point distribution A method of distributing supplies to the receiving unit at a supply point railhead or truckhead. The unit then moves the supplies to its own area using its own transportation.

SURG surgery/surgical

SVC service

SWO special weapons officer

SYS system

TACOMM tactical communications

TB technical bulletin

TC training circular

TDA table(s) of distribution and allowances

TDY temporary duty

TEWT tactical exercise without troops

theater of operations That portion of an area of conflict necessary for the conduct of military operations, either offensive or defensive, to include administration and logistical support.

TM technical manual

TMC troop medical clinic

TO *See* theater of operations

TOE table(s) of organization and equipment

TRANS transportation

TRMT treatment

TRVEH tracked vehicle

UCMJ Uniform Code of Military Justice

unit trains Combat service support personnel and equipment organic or attached to a force that provides supply, evacuation, and maintenance services. Unit trains, whether or not echeloned, are under unit control and no portion of them is released to the control of a higher headquarters. Trains are normally echeloned into combat and field trains. *(See also* combat trains; field trains.)

US United States (of America)

USAR United States Army Reserve

USC United States Code

warning order A preliminary notice of an action or order that is to follow. Usually issued as a brief, oral or written message designed to give subordinates time to make necessary plans and preparations.

WIA wounded in action

WVEH wheeled vehicle

XO executive officer

REFERENCES

SOURCES USED

These are the sources quoted or paraphrased in this publication.

Army Publications

AR 310-25 *Dictionary of United States Army Terms* (Short Title: AD). 15 October 1983 (Reprinted with Basic Including Cl, May 1986).
FM 101-5-1 *Operational Terms and Symbols.* 21 October 1985.
FM 101-10-1/1 *Staff Officers' Field Manual–Organizational, Technical, and Logistic Data* (Volume 1). 7 October 1987.

DOCUMENTS NEEDED

These documents must be available to the intended users of this publication.

Army Publications

AR 27-10 *Military Justice.* 1 July 1984 (Reprinted with Basic Including Cl-6, January 1989).
AR 40-8 *Temporary Flying Restrictions Due to Exogenous Factors.* 17 August 1976.
AR 40-61 *Medical Logistics Policies and Procedures.* 30 April 1986 (Reprinted with Basic Including Cl, August 1989).
AR 40-66 *Medical Record and Quality Assurance Administration.* 31 January 1985 (Reprinted with Basic Including Cl, April 1987).
AR 40-216 *Neuropsychiatry and Mental Health.* 10 August 1984.
AR 40-501 *Standards of Medical Fitness.* 1 July 1987 (Reprinted with Basic Including Cl, October 1989).
AR 71-13 *The Department of the Army Equipment Authorization and Usage Program.* 3 June 1988.
AR 135-200 *Active Duty for Training, Annual Training, and Active Duty Special Work of Individual Soldiers.* 30 June 1989.
AR 190-51 *Security of Army Property at Unit and Installation Level.* 31 March 1986.
AR 220-1 *Unit Status Reporting.* 16 September 1986 (Reprinted with Basic Including Cl, August 1988).
AR 350-1 *Army Training.* 1 August 1981 (Reprinted with Basic Including Cl, August 1983).
AR 350-41 *Army Forces Training.* 26 September 1986.
AR 351-3 *Professional Education and Training Programs of the Army Medical Department.* 8 February 1988.
AR 385-95 *Army Aviation Accident Prevention.* 15 November 1982 (Reprinted with Basic Including Cl, February 1983).
AR 600-20 *Army Command Policy.* 30 March 1988.
AR 600-37 *Unfavorable Information.* 19 December 1986.
AR 600-105 *Aviation Service of Rated Army Officers.* 1 December 1983.
AR 600-106 *Flying Status for Nonrated Army Aviation Personnel.* 15 May 1982.
AR 601-280 *Total Army Retention Program.* 5 July 1988 (Reprinted with Basic Including C1-14, June 1989).
AR 611-101 *Personnel Selection and Classification, Commissioned Officer Classification System.* 31 October 1989.
AR 611-201 *Enlisted Career Management Field and Military Occupational Specialties.* 31 October 1989.
AR 635-200 *Enlisted Personnel.* 5 July 1984 (Reprinted with Basic Including C1-13, June 1989).
AR 640-3 *Identification Cards, Tags, and Badges.* 17 August 1984.
AR 710-2 *Supply Policy Below the Wholesale Level.* 13 January 1988 (Reprinted with Basic Including Cl, September 1989).
DA Form 1594 *Daily Staff Journal or Duty Officer's Log.* November 1962.
DA Form 2404 *Equipment Inspection and Maintenance Worksheet.* April 1979.
DA Form 2407 *Maintenance Request.* August 1988.
DA Form 2715-R *Unit Status Report.* May 1988.
DA Form 4186 *Medical Recommendation for Flying Duty.* January 1985.
DA Form 4856-R *General Counseling Form.* June 1985.
DA Form 4998-R *Quality Control and Surveillance Record for TOE Medical Assemblages.* August 1981.
DA Pam 600-8 *Management and Administrative Procedures.* 25 February 1986 (Reprinted with Basic Including Cl-2, March 1989).
DA Pam 600-8-1 *SIDPERS Unit Level Procedures.* 1 August 1986 (Reprinted with Basic Including Cl-2, March 1989).

DA Pam 710-2-1 *Using Unit Supply System, Manual Procedures.* 1 January 1982 (Reprinted with Basic Including Cl-11, September 1989).
DA Pam 710-2-2 *Supply Support Activities Supply System: Manual Procedures.* 1 March 1984 (Reprinted with Basic Including Cl-9, September 1989).
DA Pam 738-750 *Functional Users Manual for the Army Maintenance Management System* (TAMMS). 31 October 1989.
FM 5-20 *Camouflage.* 20 May 1968.
*FM 8-10 *Health Service Support in a Theater of Operations.* 1 March 1991.
*FM 8-10-3 *Division Medical Operations Center—Tactics, Techniques, and Procedures.* 1 March 1991.
FM 8-10-4 *Medical Platoon Leaders' Handbook, Tactics, Techniques, and Procedures.* 16 November 1990.
*FM 8-10-8 *Medical Intelligence in a Theater of Operations.* 7 July 1989.
*FM 8-15 *Medical Support in Divisions, Separate Brigades, and the Armored Cavalry Regiment.* 21 September 1972.
FM 8-20 (Test) *Health Service Support in a Combat Zone.* 31 May 1983.
FM 8-26 *Dental Service.* 9 September 1980.
*FM 8-35 *Evacuation of the Sick and Wounded.* 22 December 1983.
*FM 8-55 *Planning for Health Service Support.* 15 February 1985.
FM 10-14 *Unit Supply Operations (Manual Procedures).* 27 December 1988.
FM 10-14-1 *Commander's Handbook for Property Accountability at Unit Level.* 2 November 1984.
FM 10-14-2 *Guide for the Battalion.* 30 December 1981 (Change 1, September 1986),
*FM 10-63 *Handling of Deceased Personnel in a Theater of Operations.* 28 February 1986.
FM 10-63-1 *Graves Registration Handbook.* 17 July 1986.
FM 12-6 *Personnel Doctrine.* 23 August 1989.
FM 19-30 *Physical Security.* 1 March 1979.
FM 21-10 *Field Hygiene and Sanitation.* 22 November 1988.
FM 24-1 *Combat Communications.* 11 September 1985.
FM 25-4 *How to Conduct Training Exercises.* 10 September 1984.
FM 25-5 *Training for Mobilization and War.* 25 January 1985.
FM 25-100 *Training the Force.* 15 November 1988.
FM 25-101 *Battle-Focused Training Management.* 30 September 1990.
*FM 63-2 *Combat Service Support Operations—Division (How To Support).* 21 November 1983.
*FM 63-20 *Forward Support Battalion.* 26 February 1990.
*FM 63-21 *Main Support Battalion, Armored and Mechanized Divisions.* 7 August 1990.
*FM 63-22 *Headquarters and Headquarters Company and Division Material Management Center, Division Support Command, Armored, Mechanized, and Motorized Divisions.* 24 May 1988.
FM 71-3 Armored and Mechanized Infantry Brigade. 11 May 1988.
FM 71-100 *Division Operations.* June 1990.
*FM 100-5 *Operations.* 5 May 1986.
*FM 100-10 *Combat Service Support.* 18 February 1988.
*FM 101-5 *Staff Organization and Operations.* 25 May 1984.
SB *8-75-Series Army Medical Department Supply Information.* (Printed Annually.)
TB 38-750-2 *Maintenance Management Procedures for Medical Equipment.* 12 April 1987, Cl-3, November 1989.
TC 12-17 *Adjutant's Call/The S1 Handbook.* 15 October 1987.
TM 8-6500-001-10 *Operators Manual, Preventive Maintenance Checks and Services for Reportable Medical Equipment (Consolidated).* 1989.
CTA 8-100 *Army Medical Department Expendable/Durable Items.* 30 October 1988.

READINGS RECOMMENDED

These readings contains relevant supplemental information.

Joint and Multiservice Publications

AR 40-25 *Nutritional Allowances: Standards and Education.* 15 May 1985 (NCM 10110.1; AFR 160-95).

*This source was also used to develop this publication.

AR 40-350 *Medical Regulating to and within the Continental United States.* 24 April 1975 (BUMEDINST 6320.lD; AFR 168-11; BMS CIR 75-15; CGCOMDTINST 6320.8A).

AR 40-535 *Worldwide Aeromedical Evacuation.* 1 December 1975 (Reprinted with Basic Including Cl, May 1979) (AFR 164-5; OPNAVINST 4630.9C; MCO P4630.9A).

AR 40-538 *Property Management During Patient Evacuation.* 1 June 1980 (BUMEDINST 6700.2B; AFR 167-5).

AR 40-562 *Immunizations and Chemoprophylaxis.* 7 October 1990 (NAVMEDCOMINST 6230.3; AFR 161-13; CG COMDTINST 6230.4D).

AR 40-574 *Aerial Dispersal of Pesticides.* 26 April 1976 (AFR 91.22).

AR 40-657 *Veterinary/Medical Food Inspection and Laboratory Service.* 19 May 1988 (NAVSUPINST 4355.E; AFR 161-32; MCO P10110.31F).

AR 40-905 *Veterinary Health Service.* 1 September 1985 (SECNAVINST 6401.1; AFR 163.5).

FM 8-8 *Medical Support in Joint Operations.* 1 June 1972 (Reprinted with Basic Including Cl, May 1975) (NAVMED P-5047/AFM 160-20).

FM 8-9 *NATO Handbook on the Medical Aspect of NBC Defensive Operations* (AMedP-6). 31 August 1973 (Reprinted with Basic Including Cl, May 1983) (NAVMED P5059; AFP 161-3).

FM 41-5 *Joint Manual for Civil Affairs.* 18 November 1966 (OPNAV 09B2P1; AFM 110-7; NAVMC 2500).

FM 101-40 *Armed Forces Doctrine for Chemical and Biological Weapon Defense.* 30 June 1976 (NWP 36 (D); AFR 355-5; FMFM 11-6).

Army Publications

AR 5-9 *Intraservice Support Installation Area Coordination.* 1 March 1984.

AR 20-1 *Inspector General Activities and Procedures.* 1 June 1985 (Reprinted with Basic Including Cl, 1 September 1986).

AR 27-1 *Judge Advocate Legal Service.* 15 September 1989.

AR 40-2 *Army Medical Treatment Facilities: General Administration.* 3 March 1978 (Reprinted with Basic Including Cl-2, March 1983).

AR 40-3 *Medical, Dental, and Veterinary Care.* 15 February 1985.

AR 40-4 *Army Medical Department Facilities/ Activities.* 1 January 1980.

AR 40-5 *Preventive Medicine.* 1 June 1985 (Reprinted with Basic Including Cl, September 1986).

AR 40-14 *Control and Recording Procedures for Exposure to Ionizing Radiation and Radioactive Materials.* 13 March 1982.

AR 40-21 *Medical Aspects of Army Aircraft Accident Investigation.* 23 November 1976.

AR 40-35 *Preventive Dentistry.* 26 March 1989.

AR 40-46 *Control of Health Hazards from Lasers and Other High Intensity Optical Sources.* 6 February 1974 (Reprinted with Basic Including Cl, November 1978).

AR 40-48 *Nonphysician Health Care Providers.* 3 December 1984 (Reprinted with Basic Including Cl, August 1985).

AR 190-8 *Enemy Prisoners of War—Administration, Employment, and Compensation.* 1 June 1982 (Reprinted with Basic Including Cl, December 1985).

AR 600-200 *Enlisted Personnel Management System.* 5 July 1984 (Reprinted with Basic Including C1-15, June 1989).

AR 601-280 *Total Army Retention Program.* 5 July 1984 (Reprinted with Basic Including C1-14, June 1989).

AR 750-1 *Army Materiel Maintenance Policies and Retail Maintenance Operations.* 31 October 1989.

DA Pam 27-1 *Treaties Governing Land Warfare.* 7 December 1956.

FM 1-103 *Airspace Management and Army Air Traffic in a Combat Zone.* 30 December 1981.

FM 3-100 *NBC Operations.* 17 September 1985.

FM 8-42 *Medical Operations in Low Intensity Conflict.* 4 December 1990.

FM 8-50 *Prevention and Medical Management of Laser Injuries.* 8 August 1990.

FM 19-1 *Military Police Support for the AirLand Battle.* 23 May 1988.

FM 19-40 *Enemy Prisoners of War, Civilian Internees, and Detained Persons.* 27 February 1976.

FM 20-31 *Electronic Power Generation in the Field.* 9 October 1987.

FM 26-2 *Management of Stress in Army Operations.* 29 August 1986.

FM 29-51 *Division Supply and Field Service Operations.* 13 November 1984.
FM 34-3 *Intelligence Analysis.* 15 March 1990.
FM 34-35 *Armored Cavalry Regiment and Separate Brigade Operations.* December 1990.
FM 41-10 *Civil Affairs Operations.* 17 December 1985.
FM 43-12 *Division Maintenance Operations.* 10 November 1989.
FM 63-3 *Combat Service Support Operations-Corps (How to Support).* 24 August 1983.
FM 100-103 *Army Airspace Command and Control in a Combat Zone.* 7 October 1987.
FM 101-10-1/2 *Staff Officers Field Manual—Organizational, Technical, and Logistical Data, Planning Factors* (Volume 2). 7 October 1987.

INDEX

advanced trauma management, 1-2*b*, 1-5, 1-6*c*, 1-7*d*, 3-3*b*, 3-8*b*, 4-13

aid station. *See* battalion aid station.

AirLand Battle, 2-1

ambulance
- exchange point, 4-10*b*, 4-12*b*, 4-14, Figures F-1 and F-2
- platoon, section, squad, 1-7*b*, 3-5*a*, 3-8, Figures 3-2, 3-3, 3-5, 3-6, 3-7

area support squad, Figures 3-2, 3-3, 3-5, 3-6

Army airspace command and control, 4-12*b*, 4-14

Army training management system. *See* training.

aviation brigade. *See* brigade.

battalion aid station, 1-6*c* and *d*, 1-7*c*, 1-8*a*(1), (2), 1-8*b*(3), 3-3*b*, Figures F-1 and F-2

battalion surgeon, 3-7

battle damage assessment and repairs. *See* maintenance, nonmedical.

battle fatigue. *See* mental health.

battle focus. *See* training.

blood management, 1-8*c*(1)
- emerging blood management, 1-8*c*(2)

brigade
- aviation, 2-3*b*, 3-7, 4-8
- maneuver, 2-3*a*, 4-1, 4-9
- support area, 1-7*f*, 3-3*a*, 3-6
- surgeon, 3-6, 4-8, 4-9*b* and *c*, 4-10*b*, 4-12*b*, 4-13

Class VIII supply. *See* health service logistics.

combat
- lifesaver, 1-6*b* and *c*, 5-17
- medic, 1-6*c*, 1-7*a*, 1-8*a*, 3-8*a*
- medic section, 3-8*a*
- service support, 2-1, 2-3*a*—*c*, 4-8, 4-9*a*(6), 4-10*b*, App D
- stress control. *See* mental health.
- support, 1-5, 1-7*a*, 3-7
- support battalion, 1-5, 1-7*a*, 3-7

combat (*continued*)
- zone, 1-8*a*(4), 1-8*b*(4), Figure 1-1, D-4*c*, Figures F-1 and F-2

command and control, 2-2, 2-3

command sergeant major, 4-10*a*(6)

communications zone, 1-8*a*(5), Figures 1-2, F-1, and F-2

continuing health education. *See* training.

corps
- support area, Figures F-1 and F-2
- support command, 4-11
- surgeon, 5-15

daily staff journal, D-4*c*

dental
- care, 3-2*b*, 3-3*b*, 3-5*b*, 3-6*b*, 5-15
- surgeon, 3-4*a*, 5-12

disease and nonbattle injuries, 1-2

division
- air assault, 2-1, Figure 2-3
- airborne, 2-1, Figure 2-2
- armored, 2-1, Figure 2-4
- artillery, 2-3*c*
- clearing station, 1-6*d*, 1-7*e*, Figure 1-1, 3-1*a*, Figures F-1 and F-2
- dental surgeon. *See* dental.
- echelon of care, 1-5, Figure 1-1
- G1, Figure 2-6, 5-5, Table 5-1
- G2, Figure 2-6, Table 5-1
- G3, 2-3*c*, Figure 2-6, Table 5-1, 5-17
- G4, 2-3*d*, Figure 2-6, Table 5-1
- G5, Figure 2-6, Table 5-1
- headquarters, 2-2, Figure 2-6
- light infantry, 2-1, Figure 2-1
- medical operations center. *See* division support command medical elements (under main support battalion/forward support battalion design).
- medical supply office. *See* health service logistics.
- mental health section. *See* mental health.
- psychiatrist. *See* mental health.
- support area, 1-7, 2-3*d*, 3-2, 3-4, 3-5, Figures F-1 and F-2

division (*continued*)
support command (not under main support battalion/forward support battalion design), 2-3*d*(1), Figure 2-7
medical elements
battalion, medical, Figure 2-7, 3-1
commander, battalion 4-10*a*(1), 5-1, 5-2, 5-4, 5-5, 5-9, 5-11
staff, medical battalion, 4-10*a*
forward support medical company, 3-3, Figure 3-3, 4-1
Headquarters and Company A, 3-2, Figure 3-2
support command (under the main support battalion/forward support battalion design), 2-3*d*(2), Figure 2-8
medical elements
division medical operations center, 1-8*c*, 3-4*b*, Figure 3-4, 4-14, 5-14
medical company, forward support battalion, 3-6, Figure 3-6, 4-1
medical company, main support battalion, 3-4, 3-5, Figure 3-5
surgeon, 3-4*a*, 4-10*a*(1), 5-1, 5-11—5-18, A-3, C-1

emergency medical treatment, 1-7*c*, Figure 1-1, 3-8*b*

enemy prisoners of war, 3-4, 5-12, 5-13

first sergeant, 4-6*b*, 4-10*a*(6)

flight surgeon, C-1—C-3

forward
area support coordinator, 2-3*d*(1), 3-3, 4-11
area support team, 2-3*d*(1), 3-3, 4-11
support battalion, 1-5, 4-12
support medical company. *See* division support command medical elements.

Geneva Conventions, 5-19

graves registration, 4-7

hand receipt. *See* supply operations.

health service logistics, 1-6*a*(2), 1-8
Class VIII (medical), 1-8
resupply
backhaul, 1-8*a*(3), 1-8*c*
battalion aid station, 1-8*a*(3)
combat medic, 1-8*a*(1)
emergency, 1-8*a*(5)
medical companies, 1-8*a*(3)

health service logistics (*continued*)
quality control procedures, 4-5*d*
supply point distribution, 1-8*a*(2)
sets, kits, and outfits, 4-5*c*
division medical supply office, 1-8*a*, 3-5, Figures 3-2 and 3-5
medical logistics battalion, 1-8*a*—*c*
medical logistics, optical, and maintenance, 1-8*a*—*c*
medical maintenance, 1-8*b*
direct support, 1-8*b*(4)
operator/user, 1-8*b*(1)
support services, 1-8*b*(3)
unit level, 1-8*b*(2)

health service support
basic doctrine, 1-1
echelons of care, 1-5, Figure 1-1, 3-1, 3-4, 3-8*b*
estimates, App F
planning, 1-6*a*, 3-4*a*, 5-2, 5-4, 5-12, 5-18, D-5 (Step #3)
principles of operations, 1-3
standing operating procedures, 3-4, 5-16, Tables 5-2 and 5-3
synchronization, 3-4, 4-9*c*, 5-2

main support battalion, 1-5, 2-3*d*(2), Figure 2-8
medical channels, 4-10*b*
medical company. *See* division support command, medical elements (under main support battalion/forward support battalion design)
medical detachment (surgical), 1-7*f*

maintenance (medical). *See* health service logistics.

maintenance (nonmedical)
battle damage assessment and repair, 4-4, 5-10
cannibalization, 5-10
depot, 5-10
dispatch, 5-10
forms and records, 5-10
intermediate level, 5-10
log book, 4-4
lubrication order, 5-10
prescribed load list, 5-10
preventive maintenance checks and services unit level, 5-10

medical
battalion (division). *See* division support command (not under main support battalion/forward support battalion design).
brigade, 1-3*f*
command, 1-3*f*

medical (*continued*)
detachment (surgical) (squad), 1-7*f*
evacuation, 1-6*d*, 3-4*a*, 3-5*b*, 3-6, 3-8*b*, 4-7, 5-18
group, 1-3*f*
logistics battalion. *See* health service logistics.
logistics, optical, and maintenance. *See* health service logistics.
platoon, 1-7*a*, 3-7, 3-8
resupply Class VIII. *See* health service logistics.

mental health, 5-15, 5-17
battle fatigue, 4-13, Table 5-2, App A
casualties, App A
brigade combat stress coordinator, App A
clinical psychologist, A-3*a*(4)
combat stress control, 1-6*a*, *b*, 3-4, 3-5*b*, 4-10*b*, 5-11, Table 5-2
division mental health section, Figure 3-2, Figure 3-5, A-2
psychiatrist, 3-4*a*, A-3*a*(3) and (4), A-3*b*(4)(*b*)
social work officer, A-3*a*(4)

military justice system, App B

modular health service support system, 1-7

nonreturn to duty, 1-2

operations
control, 2-3, 4-12
orders, 4-9*c*, 4-10*a*(4), 5-4
plan, 4-9*a*(5), 4-9*b*, *c*, 5-4, 5-12

patient holding, 1-7*e*, Figure 3-2, Figure 3-3, 3-5*b*, Figure 3-5, 3-6, Figure 3-6, A-2*c*(6)(*g*)

personnel administration, 4-6, 5-9
center, 4-6, 5-9
planning. *See* health service support.

preventive medicine, 3-1*a*, 3-4, 3-5*b*, 4-10*b*, 4-12*b*, 4-14, 5-11, 5-12, 5-17
section, Figure 3-2, Figure 3-5

property accountability. *See* supply operations (nonmedical).

reconstituting unit level medical elements, 3-1, 3-3*b*, 3-5*b*

regimental surgeon, 4-13

reinforcement, 3-1, 3-3*b*, 3-5*b*, 3-7

S1
brigade, 4-9*a*(3), 4-9*b*(1)
division support command, Figure 3-4
forward support battalion, 4-12*a*(3)
medical battalion, Figure 3-2, 4-6, 4-10*a*(3)

S2
brigade, 4-9*a*(4), 4-9*b*(2)
division support command, Figure 3-4
forward support battalion, 4-12*a*(4)
medical battalion, Figure 3-2, 4-10*a*(4)

S3
brigade, 4-9*a*(5), 4-9*b*(3)
division support command, Figure 3-4
forward support battalion, 4-12*a*(4)
medical battalion, Figure 3-2, 4-10*a*(4)

S4
brigade, 4-9*a*(6), 4-9*b*(5)
division support command, Figure 3-4
forward support battalion, 4-12*a*(6)
medical battalion, Figure 3-2, 4-10*a*(5)

S5
brigade, 4-9*a*(7), 4-9*b*(6)

safety, C-3*b*(1)

supply operations (medical). *See* health service logistics.

supply operations (nonmedical)
hand receipt, 4-5*a*
property accountability, 4-5*a*
property book officer, 4-5*a*
quality control, 4-5*d*
resupply, 4-5*e*
security, 4-5*b*
stock levels, 4-5*c*
unit, 4-5

support operations officer, 4-12*a*(5)

surgical squads, 1-7*f*, 3-1

synchronization of health service support. *See* health service support.

training
Army Training Management System, 4-3*c*
battle focus, 4-3*a*

training (*continued*)
calendar, 4-3*f*
Continuing Health Education Program, 5-17
exercises, 4-3*e*
medical, 5-17
plan, 4-3*f*
schedule, 4-3*f*
types of training, 4-3*d*

unit
indicators, 5-8
readiness, 4-2, 5-8
status report, 4-2, 5-8

workbook, D-4*d*

By Order of the Secretary of the Army:

CARL E. VUONO
General, United States Army
Chief of Staff

Official:

PATRICIA P. HICKERSON
Colonel, United States Army
The Adjutant General

DISTRIBUTION:

Active Army, USAR, and ARNG: To be distributed in accordance with DA Form 12-11 -E, requirements for FM 8-10-5, Brigade and Division Surgeons' Handbook–Tactics, Techniques, and Procedures (Qty rqr block no. 4898).

*U.S. GOVERNMENT PRINTING OFFICE : 1992 0 - 311-831 (44620)