FM 6-20-30

TACTICS, TECHNIQUES, AND PROCEDURES FOR

FIRE SUPPORT FOR CORPS AND DIVISION OPERATIONS

DISTRIBUTION RESTRICTION: Distribution is authorized to US Government agencies only to protect technical or operational information from automatic dissemination under the International Exchange Progam or by other means. This determination was made on 1 May 1989. Other requests for this document will be referred to Commandant, USAFAS, ATTN: ATSF-DD, Fort Sill, OK 73503-5600.

DESTRUCTION NOTICE: Destroy by any method that will prevent disclosure of contents or reconstruction of the document.

HEADQUARTERS, DEPARTMENT OF THE ARMY

Field Manual
No. 6-20-30

HEADQUARTERS
DEPARTMENT OF THE ARMY
Washington, DC, 18 October 1989

TACTICS, TECHNIQUES, AND PROCEDURES FOR

FIRE SUPPORT FOR CORPS AND DIVISION OPERATIONS

TABLE OF CONTENTS

Page

PREFACE xi

CHAPTER 1
THE FIRE SUPPORT SYSTEM

Fire Support Organizations 1-2
Field Artillery 1-3
Tactical Air Support 1-3
Army Aviation 1-5
Air Defense 1-7
Electronic Warfare 1-7
Naval Fire Support 1-8
Nuclear and Chemical Support 1-12
G3 Air 1-14
Intelligence 1-14
Engineer 1-14
Army Air-Ground System 1-15
Ground Liaison Officer and Air Reconnaissance Liaison Officer 1-15
Operations Cell of the Rear Command Post 1-15

DISTRIBUTION RESTRICTION: Approved for public release; distribution is unlimited.

CHAPTER 2

FIRE SUPPORT PLANNING AT CORPS AND DIVISION

Planning Principles 2-1
Scenario 2-2
Decision Cycle 2-3
Division Commander's Actions on Receipt of the Mission 2-5
FSCOORD's Actions on Receipt of the Mission 2-5
Commander's Planning Guidance 2-7
Staff Actions 2-8
Staff Estimates 2-9
Fire Support Estimate 2-9
Mission 2-11
Situation and Courses of Action 2-11
Analysis of Courses of Action 2-12
Comparison of Courses of Action 2-12
Recommendation 2-12
Commander's Concept of the Operation 2-12
Orders and Plans 2-13

CHAPTER 3

JOINT FIRE SUPPORT OPERATIONS

USAF Air Support 3-1
Air Force Missions 3-1
Planning and Requesting Tactical Air Support 3-4
Air Tasking Order Planning and Coordination Process 3-6
Immediate Close Air Support 3-7
Control of Close Air Support 3-8
Air Force Tactical Air Reconnaissance 3-11
Requesting Tactical Air Reconnaissance 3-12
Requesting Electronic Warfare Support 3-12
Amphibious Operations 3-13
Coordination of Naval Gunfire 3-13
Requesting Naval Gunfire Support 3-14
Naval Air 3-14
USMC Fire Support Assets 3-15
Joint Suppression of Enemy Air Defenses 3-15
FSCOORD Tasks for J-SEAD 3-16

Joint Communications Interface 3-16
TACS-AAGS Communications 3-16
Communications for a Preplanned Mission 3-19
Communications for an Immediate Mission 3-19
Ground Liaison Officer Net (RATT) 3-20
Military Intelligence Battalion (Imagery Interpretations) Operations Net (SSB RATT) 3-20
US Message Text Format 3-21
TACS-AAGS Automation 3-21

CHAPTER 4

OFFENSIVE OPERATIONS

Section I.
OFFENSIVE FIRE SUPPORT 4-1
Description 4-1
Basic Tasks 4-1
Attack and Acquisition Systems 4-2
Nuclear Weapons 4-3
Section II.
MAIN ATTACK WITH SUPPORTING ATTACKS 4-4
Roles of Fire Support in the Attack 4-4
Allocation 4-5
Positioning and Displacement 4-5
Fire Support Planning and Coordination 4-6
General Parameters 4-6
Communications 4-10
Survey 4-10
Meteorology 4-10
Section III.
RESERVE OPERATIONS IN SUPPORT OF ATTACK 4-11
Description 4-11
Allocation 4-11
Fire Support Considerations 4-12
Section IV
RECONNAISSANCE AND SECURITY OPERATIONS 4-13
Employment 4-13
Reconnaissance Operations 4-13
Security Operations 4-13

Section V.
DEEP OPERATIONS **4-16**
Description 4-16
Allocation 4-16
Deep Targeting Considerations 4-16
Intelligence Preparation of the Battlefield 4-17
Section VI.
REAR OPERATIONS **4-19**
Description 4-19
Fire Support 4-20
Observers 4-24
Fire Support Command and Control 4-24
Section VII.
EXPLOITATION **4-27**
Description 4-27
Allocation 4-27
Fire Support Considerations 4-27
Section VIII
PURSUIT **4-28**
Description 4-28
Allocation 4-28
Fire Support Considerations 4-28

CHAPTER 5

DEFENSIVE OPERATIONS

Section I.
DEFENSIVE FIRE SUPPORT **5-2**
Description 5-2
Basic Tasks 5-2
Attack and Acquisition Systems 5-2
Nuclear Weapons 5-3
Section II.
DEEP OPERATIONS **5-4**
Description 5-4
Allocation 5-4
Targeting 5-4

Section III.
SECURITY FORCE OPERATIONS FORWARD AND TO THE FLANKS OF THE DEFENDING FORCE **5-4**

Description 5-4
Fire Support Tasks 5-5
Allocation of Fire Support 5-5
Fire Support Planning and Coordination 5-6
Sustainment 5-7

Section IV.
MAIN BATTLE AREA DEFENSIVE OPERATIONS **5-7**

Description 5-7
Fire Support Considerations 5-7
Fire Support Tasks 5-8
Allocation of Fire Support 5-8
Positioning of Field Artillery 5-9
Target Acquisition 5-9
Communications 5-9
Suppression of Enemy Air Defenses 5-9
Counterpreparation Fires 5-10
Nuclear Planning 5-10

Section V.
RESERVE OPERATIONS IN SUPPORT OF THE MAIN DEFENSIVE EFFORT **5-10**

Description 5-10
Fire Support Tasks 5-10
Allocation 5-11

Section VI.
REAR OPERATIONS **5-11**

Description 5-11
Defense Against Threat Activities 5-11
Fire Support 5-12
Fire Support Command and Control 5-13

CHAPTER 6
OTHER OPERATIONS

Section I.
RETROGRADE OPERATIONS **6-1**

Description 6-1

Delay 6-2
Withdrawal 6-3
Retirement 6-4

Section II.
PASSAGE OF LINES 6-4

Description 6-4
Control Measures 6-4
Transfer of Control 6-4
Forward Passage of Lines 6-5
Rearward Passage of Lines 6-5
Positioning of Field Artillery 6-5
Coordination 6-6

Section III.
ENCIRCLED FORCES 6-6

Description 6-6
Breakout Toward Friendly Forces 6-7
Linkup Operations 6-8

Section IV.
RIVER-CROSSING OPERATIONS 6-8

Description 6-8
Fire Support 6-9
Fire Planning 6-9

Section V.
HEAVY AND LIGHT FORCES MIX 6-9

Employment 6-9
Fire Support Planning and Consideration 6-10

APPENDIX A

ORGANIZATIONS AND DUTIES

Section I.
CORPS AND DIVISION ORGANIZATIONS A-1

Section II.
FIRE SUPPORT CELL ORGANIZATIONS A-6

Fire Support Cell A-6
Division Tactical Command Post Fire Support Element A-8
Division Main Command Post Fire Support Cell A-9
Division Rear Command Post Fire Support Element A-11
Corps Fire Support Cell A-12

Corps Tactical Command Post Fire Support Element A-13
Corps Main Command Post Fire Support Cell A-14
Corps Rear Command Post Fire Support Element A-15

Section III.
DUTIES AND RESPONSIBILITIES OF FIRE SUPPORT PERSONNEL A-15

Fire Support Coordinator A-15
Corps Deputy Fire Support Coordinator A-16
Fire Support Officer, Corps Tactical Command Post A-16
Assistant Fire Support Coordinator, Corps Main Command Post A-16
Fire Support Officer, Corps Main Command Post A-17
Field Artillery Plans Officer and Fire Support Sergeant, Operations Cell, Corps Rear Command Post A-17
Division Deputy FSCOORD, Division Fire Support Cell A-17
Division AFSCOORD A-17
Fire Support Officer, Operations Cell, Division Rear Command Post A-18
Field Artillery Intelligence Officer A-18
Target Analyst A-19
Air Liaison Officer A-19
Assistant Air Defense Officer A-19
Naval Gunfire Officer (Division) A-19
Operations Sergeant A-19
Fire Support Segeant A-20
Target Processing Specialist (SGT) A-20
Target Processing Specialist (SPC) A-20

APPENDIX B
FIRE SUPPORT PLANNING FACTORS

Section I.
DEEP OPERATIONS B-1

Description B-1
FSCOORD Considerations B-1
Deep Operations Plan Format B-2

Section II.
CLOSE OPERATIONS B-4

Description B-4
Fire Planning B-4
Planning Guidelines B-5

Ammunition Supply B-5
Sequence of Fire Planning B-5
Resources B-5
Commander's Concept B-6
Detailed Fire Plan B-6
Fire Planning Terms B-6
Interdiction Fire B-6
Counterfire B-7
Suppression of Enemy Air Defense B-7
Defensive Fire B-7
Counterpreparation Fire B-8
Planned Fire B-8
Measured Response B-9
Fire Planning for an Attack B-9
Planning Considerations B-9
Determination of H-Hour B-11
Commander's Ability to Influence B-11
Changes to Fire Plans B-12
Observation B-12

Section III.
REAR OPERATIONS B-12

Description B-12
Fire Support Tasks B-12
Command and Control B-13
Fire Support Planning and Coordination B-13
Special Considerations B-13

Section IV.
COUNTERFIRE B-14

Description B-14
Threat B-14
Concept B-16
Corps Counterfire Responsibility B-17
Division Counterfire Responsibility B-19
Counterfire for Low-Intensity and Mid-Intensity Situations B-19
Corps Decide Function B-19
Corps Detect Function B-21
Corps Deliver Function B-23

Division Decide Function B-23
Division Detect Function B-23
Division Deliver Function B-26
Assignment of Division Counterfire Role to a Field Artillery Brigade B-26
Employment of Target Acquisition Assets B-27
Division Artillery Support Platoon B-29
Examples of Organization for Combat B-29

Section V.
SUPPRESSION OF ENEMY AIR DEFENSES B-35

Description B-35
Requirement for SEAD B-35
Conduct of J-SEAD B-36
SEAD Categories B-36
Responsibilities B-37
Initiating the SEAD Process B-38
SEAD Planning and Execution B-39
SEAD Targeting B-40

Section VI.
NUCLEAR OPERATIONS B-40

Description B-40
Planning Considerations B-40
Planning Allocation and Coordination B-41
Phases of Planning B-41
Planning Steps B-42
Peacetime Planning B-42
Transition to War Planning B-47
Battle Focus and Refinement B-47
Package Refinement B-48
Follow-On Strike B-48
Nuclear Logistical Support Principles B-48
Nuclear Weapons Resupply B-49
References B-51

APPENDIX C

IMPROVED ARTILLERY MUNITIONS

Family of Scatterable Mines C-1

Laser-Guided Field Artillery Projectile (Copperhead) C-2
Obscurant Smoke C-3

APPENDIX D

PLANS, ORDERS, AND ANNEXES TO PLANS AND ORDERS

Operation Order D-1
Responsibilities D-1
Fire Support Plan D-3
Fire Support Annex D-14
Chemical Support Plan D-20
Nuclear Support Plan D-23
TACFIRE Considerations D-28

APPENDIX E

TARGET NUMBERING SYSTEM

First Letter Designator E-1
Second Letter Designator E-2
Blocks of Numbers E-2

APPENDIX F

FIRE SUPPORT COORDINATING MEASURES

STANAG 2099/QSTAG 531 ..... F-1
Establishment F-1
Graphic Portrayal F-1
Boundaries F-1
Zones of Fire F-2
Types of Measures F-2
Permissive Measures F-2
Restrictive Measures F-5

GLOSSARY **Glossary-1**

REFERENCES **References-1**

INDEX **Index-1**

PREFACE

Commanders must understand the spectrum of capabilities of the fire support system. Skillful integration of fire support into all facets of the AirLand Battle must take place simultaneously and continuously as close, deep, and rear operations are synchronized.

This publication prescribes fire support doctrine for corps and division operations. It is designed to assist fire support coordinators and their staffs in the conduct of combat operations. It also serves as a guide for echelons above corps regarding the organization, capabilities, and employment of fire support.

Fire support for brigades is addressed in FM 6-20-40 and FM 6-20-50, the companion manuals for this document. FM 6-20 serves as the capstone for the entire series. Other service commanders and staffs will find this publication useful in planning fire support for joint operations.

This publication is fully compatible with the Army's AirLand Battle doctrine as contained in FM 100-5 and is consistent with current joint and combined doctrine. It assumes that the user has a fundamental understanding of the fire support principles set forth in FM 6-20. It does not repeat concepts in FM 100-5, FM 100-6, FM 100-2-1, FM 101-5, and other readily available references except as necessary to explain unique corps- and division-level fire support matters.

This publication has undergone several draft revisions during its development. Almost every field artillery unit has provided some input during the development cycle. Numerous individual *Redlegs* helped make it the authoritative fire support reference document that it is. Those units listed below actually provided representatives from the field to a unique exercise encompassing major input and comprehensive rewrite of the preliminary draft. The efforts of these senior fire support element (FSE) representatives resulted in the publication now before you. It reflects the consensus of the field on fire support doctrine for corps and division. The FSE representatives were from –

- III Corps Artillery, Fort Sill, Oklahoma
- V Corps Artillery, Federal Republic of Germany (FRG)
- VII Corps Artillery, FRG
- XVIII Airborne Corps Artillery, Fort Bragg, North Carolina
- 7th Infantry (Light) Division Artillery, Fort Oral, California

The US Army Field Artillery School owes them, and many more, a great debt of gratitude for the professionalism displayed in true *Redleg* fashion.

The provisions of this publication are the subject of international agreements (standardization agreements [STANAGs] and quadripartite standardization agreements [QSTAGs]):

- 2014/506 *Operation Orders, Annexes to Operation Orders, and Administrative and Logistics Orders*
- 2082 *Relief of Combat Troops*
- 2099/531 *Fire Coordination in Support of Lund Forces*
- 2103/187 *Reporting Nuclear Detonations, Biological and Chemical Attacks, and Predicting and Warning of Associated Hazard Areas (ATP-45)*
- 2104/189 *Friendly Nuclear Strike Warning to Armed Forces Operating on Lund*
- 2147/221 *Target Numbering System (Nonnuclear)*

The proponent of this publication is HQ TRADOC. Submit changes for improving this publication on DA Form 2028 (Recommended Changes to Publications and Blank Forms) and forward directly to:

Commandant
US Army Field Artillery School
ATTN: ATSF-DD
Fort Sill, OK 73503-5600

Unless otherwise stated, whenever the masculine gender is used, both men and women are included.

CHAPTER 1

THE FIRE SUPPORT SYSTEM

The fire support system is made up of three distinct components that function together to give the commander the fire support he needs to accomplish his mission. These three components are as follows:

- *Command, control, and communications (C^3) systems, facilities, and personnel required to manage fire support and to direct those tactical and technical actions needed to attack targets quickly and effectively.*
- *Target acquisition systems needed to acquire targets by reconnaissance, surveillance, and devices. These systems include many individuals, units, and resources on the battlefield that help detect the enemy.*
- *Weapons and ammunition to deliver the firepower on the target according to the commander's battle plan.*

The key to effective fire support is the force commander's ability to bring these assets to bear on *the enemy in an integrated and coordinated manner that is synchronized with the scheme of maneuver. These components are the tools that enable the commander to make fire support work. How he uses these tools depends on how well his fire support commanders and staff officers understand and operate the fire support coordination process. This process must occur at all echelons of command, but it is more complex at the corps and division levels. AirLand Battle doctrine has a major impact on fire support at these levels, where fire support must simultaneously be planned and executed for the deep, close, and rear operations.*

This chapter provides the foundation for understanding the use of all of the fire support tools and the duties and responsibilities of the many fire support operators. This chapter serves as a transition from FM 6-20 in that it is a recapitulation of the principles of the fire support system. This is a necessary redundancy because the components of the fire support system must form a base from which the reader can proceed to the later chapters covering the planning and execution processes.

Each component of the fire support system is addressed in a separate section of this chapter. Component characteristics, requirements, and capabilities are described and examined in detail. Other references supporting the material in this chapter are listed in the References portion of this publication.

FIRE SUPPORT COORDINATION

"If the band played a piece first with the piccolo, then with the brass horn, then with the clarinet, and then with the trumpet, there would be a hell of a lot of noise but no music. To get harmony in music, each instrument must support the others. To get harmony in battle, each weapon must support the others. Team play wins."

– General Patton

Fire Support Organizations

Command Responsibility

The force commander is responsible for integrating fire support within the concept of the operation. At corps and division, as in other echelons of command, the commander has a fire support staff that works with his coordinating staff to help him discharge his responsibility for fire support. Fire support cells (FS cells) are organized to facilitate the coordination and execution of the fire support system. The functions of the FS cells are supervised by the force artillery commander, who acts as the fire support coordinator (FSCOORD) for the force commander. Normally, the FSCOORD operates through the FSE that is a part of the main command post (CP) fire support cell.

Fire Support Cell Functions

The FS cell is a central clearing house for planning, coordinating, and synchronizing fire support for the corps and division. The exact way it is organized varies among corps and divisions. Organization depends on the unit missions, availability of fire support assets, and command preferences. The actual makeup of the FS cell is flexible. However, it ensures that all fire support assets respond to the force commander's intent. (Appendix A, Section I, gives the details of corps and division organizations.)

Fire Support Cell Staff

The FSE staff personnel are from force artillery headquarters; however, the FS cell is not a field artillery organization. The field artillery is but one of several fire support capabilities represented in the FS cell. The following agencies normally operate as part of the FS cell:

- Field artillery (FSE)[1].
- Tactical air support (tactical air control party [TACP])[1].
- Army aviation (avn)[1].
- Air defense (AD)[1].
- Electronic warfare (EW).
- Naval fire support (naval gunfire liaison officer [NGLO])[1,2].
- G3 air[1].
- G23.
- Engineer (engr).

- Air support operations center (ASOC)[2].
- Nuclear and chemical (NC) support.
- Army airspace command and control (A^2C^2).

[1] Is a part of the corps A^2C^2 element.

[2] As required.

[3] May not be physically located in this cell on a continuous basis. Provides input and/or information as required.

Field Artillery

Mission

The mission of field artillery is to destroy, neutralize, or suppress the enemy by cannon rocket, and missile fire and to help integrate all fire support into combined arms operations.

Roles

The field artillery system provides close support to maneuver forces. counterfire, and interdiction as required. These fires neutralize, canalize, or destroy enemy attack formations or defenses; obscure the enemy's vision or otherwise inhibit his ability to acquire and attack friendly targets; and destroy targets deep in the enemy rear with long-range rocket or missile fires. Field artillery support can range from conventional fires in a company zone to massive nuclear and chemical fires across a corps front.

Command and Control

Clearly defined, systematic, and positive command and control (C^2) ensures that the field artillery contributes to the fire support system in a responsive manner and that it is adequate to support the mission. Command and control relationships are established through command relationships (that is, organic, assigned, attached, or operational control [OPCON]) and assignment of tactical missions (that is, direct support, reinforcing, general support reinforcing, or general support).

Fire Support Integration

Field artillery has the dual mission of integrating all fire support available to the force commander and providing field artillery fires. For this reason, the corps and division artillery headquarters and headquarters batteries (HHBs) are organized and equipped to field full-time FSEs for the corps and division CPs. Each corps and division CP usually is divided into a tactical CP, a main CP, and a rear CP. FSEs operate at the tactical CP and at the main CP, as part of the FS cell, simultaneously and continuously.

The FSE consists of field artillerymen who are specialists in working all of the operations phases of the three components of the fire support system. They also ensure the functioning of each component as it relates to the field artillery system. When the FSE deploys to the corps or division main CP, it forms the hub of the FS cell.

Tactical Air Support

Air Support Operations Center

The ASOC plans, coordinates, and directs close air support and tactical air reconnaissance operating in the supported ground commander's area of responsibility. It provides tactical air representation to the corps. It is an operational component of the tactical air control system (TACS), which is tasked to coordinate and direct tactical air support operations. The ASOC is under the operational control of the tactical air control center (TACC) or the allied tactical operations center (ATOC) in NATO. Its primary function is to provide fast reaction to satisfy immediate requests from ground forces for close air support (CAS) and tactical air reconnaissance (TAR). It also helps in planning for battlefield

air interdiction (BAI). The ASOC may be at the division level when the division operates as a separate unit.

Requests for tactical air assets to support the maneuver commander's concept of operations are coordinated at the FS cell with the ASOC and are transmitted through Army command channels to the TACC. The air component commander (ACC), through the TACC or theater equivalent, allocates resources to the corps through the ASOC on the basis of guidance provided by the joint force commander (JFC). Normally, the TACC retains operational control of air interdiction (AI) and TAR assets. The employment of AI forces against targets which are expected to have a near-term effect on the maneuver commander's battlefield is known as battlefield air interdiction. BAI and TAR are coordinated with the ASOC in as near real time as possible. Mission, threat, and targeting information available at the FS cell must be coordinated through the ASOC with the TACC.

The TACC transfers control of CAS assets to the ASOC for employment. The ASOC is responsible for establishing and maintaining the TACS at command levels below the land component commander (LCC). This is done through TACPs assigned at corps, division, brigade, and battalion levels. Allocated CAS assets are distributed to subordinate Army units on the basis of priorities established by the G3. Normally, the ASOC is established at corps level; however, its functions must be provided at any command level if an independent maneuver unit is provided tactical air support.

Air Liaison Officer

The ASOC is supervised by the air liaison officer (ALO), who serves as the primary advisor to the force commander on all Air Force matters. Although the manning of the ASOC may vary, depending on the operational requirement, the ASOC will always be prepared to work on a 24-hour basis. It has a jump capability to ensure continuous operation. Representation from the ASOC forms an essential part of the FS cell at the corps main CP. In some cases, the entire ASOC may be situated within the FS cell; while in other corps, the ASOC proper is near the FS cell with the ALO or his assistant actually working with the FS cell.

Tactical Air Control Party

A TACP is provided to corps, division, brigade, and battalion. The TACP–

- Provides advice to the Army commander.
- Operates the Air Force air request net.
- Provides a coordination interface with the respective FS cell.
- Keeps the ASOC informed on division activities; at the corps level, supplements the ASOC manning and/or integrates into the corps staff in planning future operations.
- Provides final attack control for CAS attacks.

At corps and division levels, the TACP includes an ALO, a fighter liaison officer (FLO), a tactical airlift liaison officer (TALO), and a reconnaissance liaison officer (RLO).

At maneuver brigade level, the TACP includes two ALOs and two tactical air command and control specialists (TACCSs). At maneuver battalion level, the TACP consists of one ALO and two TACCSs. The duties of these individuals are as follows:

- The air liaison officer –
  - Is the Air Force commander's representative at battalion through corps levels.

- Advises the respective maneuver commander and his staff on the capabilities, limitations, and employment of tactical air (TACAIR) – in particular CAS, BAI, suppression of enemy air defenses (SEAD), reconnaissance, and airlift.
- Ensures the TACP maintains communications on the Air Force air request net.
- Helps plan the simultaneous employment of air and surface fires, to include input to the G3 (S3) air and FSCOORD for air support plans included in the fire support plan.
- Provides direct liaison for local air defense measures and airspace management with the Army airspace command and control element.

- The fighter liaison officer —
  - Is a member of the FS cell and A^2C^2 element.
  - Advises the G3 (S3) air and FSCOORD on the capabilities, limitations, and employment of resources allocated for CAS.
  - Helps in and advises on the development and evaluation of CAS and BAI requests to include the suitability of targets for attack by air resources.
  - Directs close air strikes (normally not at division or corps).
- The TALO is the Military Airlift Command (MAC) representative of the TACP. The TALO provides specific knowledge and expertise on the employment of tactical as well as strategic airlift in support of ground operations.
- The reconnaissance liaison officer at corps supports Army requests for reconnaissance.

Army Aviation

Mission

Army aviation performs the full spectrum of combat, combat support, and combat service support missions.

Roles

In support of the fire support mission area, Army aviation functions in the roles discussed below.

Dedicated Aerial Forward Observation. Target acquisition reconnaissance platoons and companies provide aerial observation or transport field artillery forward observers to vantage points that otherwise are impractical to reach. With their lasing capability, these units can provide terminal guidance information for various precision guided munitions.

Air Movement of Weapon Systems and/or Ammunition. Utility and cargo aircraft carry artillery to firing positions deep in enemy territory to achieve surprise. These aircraft also move weapons and ammunition to support widely dispersed field artillery units in support of close operations. They offer both speed of movement and flexibility of employment to the ground commander. Also, Army helicopters can move special munitions in support of field artillery operations.

Air Reconnaissance. Air reconnaissance units obtain and report near-real-time intelligence information that is used for fire support targeting.

Intelligence Electronic Warfare. Fixed- and rotary-wing special electronic mission aircraft (SEMA) serve as intelligence electronic warfare (IEW) platforms for acquiring targets for fire support assets. The SEMA helicopters provide airborne communications intercept, direction finding (DF), and jamming in support of division and armored cavalry

regiment (ACR) IEW operations. Also, corps fixed-wing SEMA provide aerial reconnaissance, surveillance, communications intercept, and EW target acquisition in support of corps IEW operations.

Attack Helicopter Operations. The primary mission of attack helicopter units is to destroy armor and mechanized forces. Attack helicopters are employed in combined arms operations to maximize their weapons and aircraft capabilities in accomplishing the commander's antiarmor missions. They are well suited for situations in which rapid reaction time is important or where terrain restricts ground forces. On the basis of the commander's risk-versus-payoff assessment, attack helicopter units may be tasked to provide fire support when no other fire support elements or assets are available (for example, in deep operations or while operating with ground maneuver forces in a low-intensity conflict environment out of range of friendly artillery). When tailored for this mission attack helicopters lose their antiarmor systems to provide aerial rocket fire. Although these aircraft can fire aerial rockets indirectly at extended ranges, the fires delivered are not accurate enough to warrant the large expenditure of ammunition required to perform this type of mission. To accurately employ aerial rockets, the aircraft, using running fire techniques, have to close with the enemy forces within ranges that make them vulnerable to a multitude of Threat air defense weapon systems. The loss of the antiarmor capability and the increased vulnerability dictate that attack helicopters be used in a dedicated fire support role only on rare occasions.

Aerial Mine Delivery. The Army is fielding an aerial mine delivery system. This system gives assault helicopter units the capability to lay hasty antitank and antipersonnel minefield. When integrated with the obstacle plan, the fire support plan, and the ground commander's scheme of maneuver, this capability increases the effect of canalizing and defeating the Threat force.

Aeromedical Evacuation. Aeromedical units provide evacuation for wounded and injured personnel on a mission-by-mission basis.

Command and Control

The command and control of Army aviation elements rests with the unit commander to whom they are organic, OPCON, or attached. The force commander decides how aviation will be integrated into his overall battle plan and if and when aviation will be used in a fire support role. When the fires of aviation assets are integrated into the commander's scheme of maneuver, both supporting and supported elements must understand the commander's intent and purpose for the integration. Coordination between the ground force and the aviation units ensures that the commander's conditions are established and known by all concerned. These conditions describe the support aviation will provide; and they assign responsibilities concerning priority of fires, available munitions, liaison, communications requirements, positioning, and fire planning.

Delivery System Characteristics

Army aviation can quickly reach and move throughout the depth and breadth of the battlefield. This mobility and flexibility help the combined arms commander seize or retain the initiative. The types of aircraft used in the fire support mission area are categorized as discussed below.

Cargo and Utility. These aircraft have the primary mission of transporting soldiers, weapon systems, ammunition, and supplies throughout the battlefield. These units can conduct air assault or air movement operations. These aircraft allow the commander to influence the action by introducing combat power at critical times and crucial locations to defeat the enemy forces.

Target Acquisition and Reconnaissance. These aircraft serve as the *eyes* for the commander. They provide near-real-time intelligence and terminal guidance for a variety of weapon systems; for example, Hellfire and Copperhead.

Attack Helicopters. These aircraft are equipped with a considerable array of accurate and lethal weapons. They can deliver pinpoint destruction by firing antiarmor missiles or suppressive area fires with rockets and cannons.

C^2 for Joint Air Attack Team Operations

Upon receipt of a joint air attack team (JAAT) mission, the aviation commander assumes responsibility for the coordination and execution of the JAAT operations. He should be keenly aware of the ground and air tactical plan.

Air Defense

A representative of the corps and division air defense coordinator (ADCOORD) usually is in the FS cell. He helps coordinate fire support for counterair operations. This includes selection and prioritization of Army offensive counterair (OCA) and SEAD targets.

Electronic Warfare

Mission

The mission of electronic warfare is to exploit, disrupt, and deceive the enemy command and control system while protecting friendly use of communications and noncommunications systems.

Roles

Electronic warfare is an essential element of combat power. In addition to its intelligence-producing capability, it is considered a nonlethal attack means. As such, it is a key resource to be integrated and synchronized with fire support assets in support of the battle plan. It can, when integrated into the overall concept of operation, confuse, deceive, delay, disorganize, and locate the enemy. It can delay the enemy long enough for the force commander to exploit a situation that otherwise would have been missed. Jamming, in particular, provides a nonlethal alternative or supplement to attack by fire and maneuver. It is especially well suited for targets that cannot be located with targeting accuracy or that require only temporary disruption. Electronic warfare has two facets, offensive and defensive.

Offensive Electronic Warfare. Offensive EW is the employment of assets to disrupt or deny the enemy's effective use of his electronic systems. It consists of electronic support measures (ESM) and electronic countermeasures (ECM). Generally, ESM produce combat information that can be used for attack by ECM, fire, or maneuver with little systematic analysis or processing. The ECM consist of jamming and deception. One function of jamming is to degrade the enemy's combat power by denying effective operations in the electromagnetic spectrum. Another function of jamming is to reduce the signal security of enemy operators and thereby gain information through ESM. Jamming may be subtle and difficult to detect, or it may be overt and obvious. It can be done from both aerial and ground platforms. Electronic deception is used to deceive enemy forces through their own electronic systems. It provides false information to the enemy through electronic devices to induce him to act in accordance with the supported battlefield commander's desires. It is integrated with, extends, and reinforces tactical deception operations.

Defensive Electronic Warfare. Defensive EW consists of those actions taken to ensure friendly use of the electromagnetic spectrum.

NOTE: Although all these components of EW are of significant interest to the fire support system, the intent of this discussion is to focus on electronic countermeasures as an attack means. See FM 34-1 and FM 34-40 for more detailed information.

Command and Control

Electronic warfare assets are in military intelligence (MI) units at all levels and in other services. The electronic warfare section (EWS) is the staff element at corps and division that coordinates the employment of ECM. The EWS falls under the staff supervision of the G3. The G3, in coordination with the G2 and the MI brigade or battalion, is responsible for the integration of ECM into the fire and maneuver scheme. The EWS controls jamming directed at high-payoff targets and targets of opportunity while minimizing jamming effects on friendly systems and operations. The EWS, the FS cell, and the G3 section operate together to plan the attack of high-payoff targets to support the commander's battle plan. The use of ECM should always be considered when deciding to attack a particular target. More importantly, the synchronized, simultaneous use of ECM and lethal attack means requires the EWS to maintain a close, continuing working relationship with the FS cell. The best means of ensuring a close working relationship between the EWS and the FS cell is to collocate them.

Jamming Characteristics

The ECM system consists primarily of jamming. This jamming can be divided into communications and noncommunications jamming.

Communications Jamming. Communications jamming interferes with enemy communications systems. It may be applied to secure communications systems to force the enemy to transmit in the clear so that the communications can be exploited for combat information. Jamming can also aid in direction finding. It forces the enemy to transmit longer, allowing time for tip-off and multiple locator cueing from different locations for position determination. Radiation jamming against communications equipment is done by use of spot, sweep, or barrage jamming.

Noncommunications Jamming. Noncommunications jamming consists primarily of reradiation jamming. It is directed against such electronic devices as radars, navigational aids, guidance systems, and proximity fuzes to disrupt them. It causes those systems to receive false information and targets, thereby degrading system effectiveness. Reradiation jamming is done by the use of special equipment to receive enemy transmissions, change them in some way, and retransmit the signal back to the enemy.

Effectiveness. Jamming effectiveness is governed primarily by the distance of the target receiver from the jammer and the distance between the transmitter and the receiver of the targeted enemy communications. Jammers are high-priority targets for destruction. Because of their high-power output and unique electronic signature, they are relatively easy to detect and locate. Jammers have to move for survivability and to maintain favorable transmission paths against enemy radios, which are moving as the battle progresses.

Naval Fire Support

Application

When naval fire support is available and the general tactical situation permits its use, naval firepower can provide large volumes of devastating, immediately available, and instantly responsive fire support to combat forces operating near coastal waters. These fires may be in support of amphibious

operations within range of naval aircraft and gunfire, but they also may be made available to support land operations:

Mission

The general mission of naval fire support is to support maneuver force operations by destroying, neutralizing, or suppressing enemy targets that oppose our forces. Naval fire support may be provided by naval gunfire and naval air power. Usually, it is delivered in concert with supporting fires from other arms.

Naval Gunfire Ships

Naval gunfire ships are assigned one of two missions – direct support or general support. Relationships between assigned ships and supported ground force units are based on limited, delegated responsibility. For example, a ship placed in support provides the requested fire within its capability, but ship positioning and method of delivery are at the discretion of the ship captain. The supported ground force unit selects the targets, the timing of fires on the targets, and the adjustment of fires.

Direct Support. A ship in direct support (DS) of a specific troop unit delivers both planned and call fires. Call fires are to the ship what targets of opportunity are to artillery units. A naval gunfire spotter with the supported unit conducts and adjusts call fires. Call fires also may be adjusted by a naval gunfire air spotter. Members of the air and naval gunfire liaison company (ANGLICO) are specially trained in conducting naval gunfire. However, the procedures are simplified and standardized so that any trained supporting arms observer can effectively adjust the fire of a ship. Naval gunfire (NGF) DS is not the same as field artillery (FA) DS. A direct support ship will respond to calls for fire from units other than the supported unit when ordered to do so by the fire support group commander, the division naval gunfire officer, or the brigade NGLO.

General Support. General support (GS) missions are assigned to ships supporting units of brigade size or larger. The normal procedure is for the fires of the GS ship to be adjusted by an aerial observer or for the liaison officer (LO) to assign the fires of the ship to a battalion spotter for fire missions. In the latter case, on completion of the mission, the ship reverts to general support. Prearranged fires are delivered in accordance with a schedule of fires.

Capabilities

Mobility. Within the limits imposed by hydrographic conditions, the naval gunfire ship may be positioned for the best support of the ground force. The ability of the ship to maneuver is an important factor in planning for support of separated forces. It also allows selection of the most favorable gun-target (GT) line.

Ammunition Variety. The variety of projectiles, powder charges, and fuzes permits selection of optimum combinations for the attack of targets. Fuzes, for example, can be set to provide for air, surface, or subsurface detonation of rounds.

Muzzle Velocity. The high muzzle velocity and relatively flat trajectory of the naval gun make it suitable for direct fire or assault fire, particularly against materiel targets that must be penetrated or destroyed and that present a vertical face.

Rates of Fire. The large volume of fire that can be delivered in a relatively short time is a distinct advantage in delivering neutralization fires. For example, the 5-inch/54-caliber gun has a rate of fire of 35 rounds per minute at the maximum rate and 20 rounds per minute at the sustained rate.

Deflection Pattern. The normal dispersion pattern is narrow in deflection and long in range. Very close supporting fire can be

delivered when the GT line is parallel to the front line. This pattern also permits effective coverage of such targets as roads and runways when the GT line coincides with the long axis of the target.

Limitations

Flat Trajectory. The relatively flat trajectory of naval gunfire results in a large range probable error. Therefore, the dispersion pattern of the naval gun is roughly elliptical, with the long axis in the direction of fire. Before selecting naval gunfire as the proper fire support means, the FSCOORD must consider the GT line and its relation to the forward line of own troops (FLOT).

Hydrography. The hydrographic conditions of the sea area in which the naval gunfire ship must operate may be unfavorable. It may cause undesirable firing positions or require firing at longer ranges.

Fixing of Ship Position. The accuracy of naval gunfire depends on the accuracy with which the position of the firing ship has been fixed, Navigational aids, prominent terrain features, or radar beacons emplaced on the shore may be used to compensate for this limitation.

Weather and Visibility. Bad weather and poor visibility make it difficult to determine the position of the ship by visual means and reduce the observer's opportunities for locating targets and adjusting fires. Bad weather also might force the ship out to sea.

Changing Gun-Target Line. If the ship is firing while under way, the line of fire in relation to the frontline may change. This could require cancellation of the fire mission, because the inherent large range probable errors may cause rounds to endanger friendly forces.

Communications. The sole means of communication between ship and shore is radio. Normally, several nets are established to control and coordinate the support. Radio communications can be interrupted by equipment limitations, enemy EW, and unfavorable atmospheric conditions.

Enemy Action. If the naval gunfire ship comes under enemy surface, subsurface, and/or air attack, the ship may cancel its fire mission with the ground forces and try to counter this threat.

Magazine Capacity. The shore bombardment allowance varies with the ship type (600 to 1,800 rounds). When the need arises, remaining rounds will be held for self-defense of the ship.

Naval Gunfire Support Personnel

The ANGLICO personnel are available to advise unit commanders from company through division levels on how to best use the naval air and gunfire support available to them. Liaison personnel can give unit commanders and FSCOORDs information on weapon ranges, ammunition effects, all-weather bombing capabilities, and landing zone requirements. For maximum effectiveness, ANGLICO support should begin during the planning phase of an operation. The ANGLICO task-organized teams should be attached to the units they will support as soon as possible. ANGLICO personnel at all levels, company through division, are trained as NGF spotters and/or forward air controllers and can request and control missions for the units they support. So that, they can move in the same manner as the unit they support, ANGLICO personnel are trained in parachuting, skiing, snowshoeing, and inflatable rubber boat operations.

Organization of the ANGLICO

The ANGLICO is composed of a company headquarters and a division air and naval gunfire liaison team, which includes three brigade air and naval gunfire platoons. Each

platoon consists of a brigade air and naval gunfire liaison team, to be located at the brigade CP, and two supporting arms liaison teams (SALTS), which can be assigned to any two of the maneuver battalions in the brigade. Each SALT contains a liaison section, to be located at the battalion CP, and two firepower control teams (FCTs), which can be assigned to any two companies in the battalion.

Division. At division level, the ANGLICO provides its commander, a Marine lieutenant colonel who functions as the naval gunfire officer (NGO) in the division main FS cell, and the deputy commander, a Marine major who functions as the naval aviation liaison officer (NALO) in the TACP.

Brigade. The brigade air and naval gunfire liaison team provides an air officer (a Marine major) and an NGLO to the brigade CP. Normally, they are located with the brigade FS cell.

Battalion and Company. Two battalions may be assigned SALTS. The SALT controls and coordinates naval firepower at the battalion FS cell and oversees two FCTs. The FCT conducts naval air and gunfire missions at company level.

ANGLICO ORGANIZATION

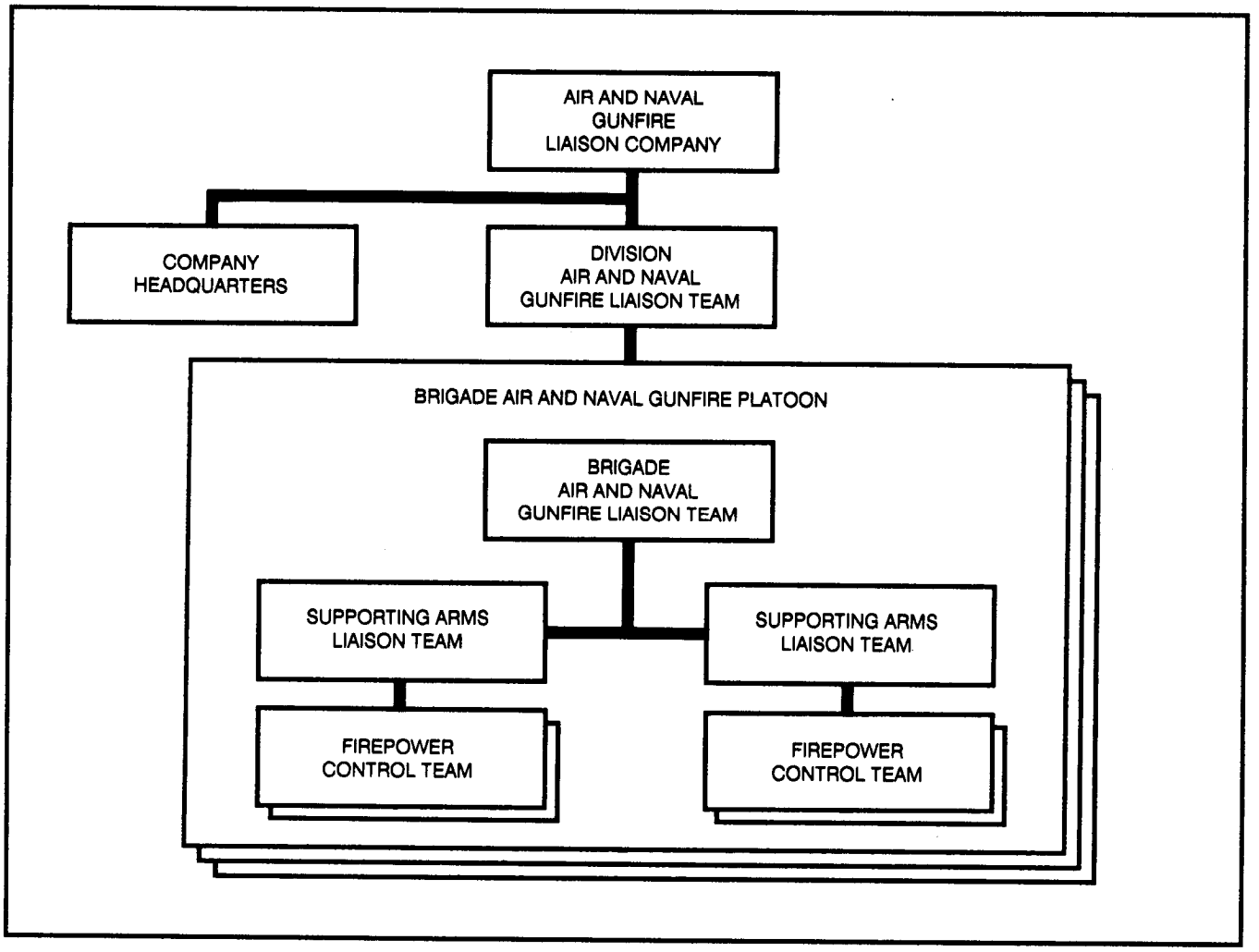

Nuclear and Chemical Support

Nuclear and chemical weapons can support operations throughout the AirLand battlefield, but the targets and tactical considerations vary with each operation. These weapons can be used to support either offensive or defensive operations. Nuclear and chemical weapons enhance close operations by increasing the capability of combat forces to control the FLOT. In deep operations, nuclear and chemical weapons can be used to retain freedom of action for our own forces. However, use in rear operations should be viewed as the least likely application of nuclear and chemical weapons.

Command and Control

At the heart of nuclear and chemical weapons employment is command and control. Continuous positive control over these munitions is imperative; but at the same time, they must be responsive to the fire support requirements of the operational and tactical commanders. The corps is the focal point for tactical nuclear weapons employment.

Planning

The planning process is continuous and congruent. The focus of nuclear and chemical planning at any level is command guidance. Amplifying guidance, as well as changes and modifications to the original written command guidance, may be generated by the staffs and commanders when required by the evolving battlefield situation. Command guidance includes the following:

- Intent of nuclear and chemical weapons use. This includes specific guidance concerning type of casualties desired, amount and duration of contamination, desired coverage percentage, and degree of assurance required.
- Synchronization with other attack means and the scheme of maneuver.
- Target priorities.
- Acquisition of enemy targets.
- Nuclear and chemical weapons employment limitations and preclusions.
- Impact on future friendly operations.
- Decision points.
- Contingency plans.
- Coordination with adjacent, supporting, and affected units.
- Delivery unit and weapon system status.
- Availability and location of munitions.
- Response time for execution.
- Strike warning to friendly units.
- Civil affairs.
- Damage assessment.

Nuclear Weapons Employment Considerations

When authority is granted, the long range and flexibility of nuclear fires make it possible to shift the focus and concentration rapidly over wide ranges. The commander can use nuclear weapons to support his scheme of maneuver; to mass fires rapidly without shifting maneuver forces; and to delay, disrupt, or destroy enemy forces in depth. Commanders can use nuclear fires to destroy, neutralize, or suppress surface targets including enemy weapons, formations, and facilities. Nuclear fires have the potential to be the principal means of destroying enemy forces. The scheme of maneuver will be synchronized to exploit the effects of the nuclear fires.

Tactics, techniques, and technical procedures are established for each type of delivery system. Artillery systems can be placed in a high state of readiness to expedite their

delivery of nuclear munitions. Cannon artillery, because of range limitations, normally is employed close to the FLOT. The responsiveness of the cannon system depends on the type and configuration of warhead used and the location of the system in relation to the target. The responsiveness of missile systems is based on the status of warhead mating and location. The employment means selected for a mission is based on the factors of rnission enemy, terrain and weather, troops and time available (METT-T). However, nuclear fires normally are integrated with conventional fires and *smart* munitions as well as maneuver forces.

Nuclear-capable units are high-value targets. The enemy will use every means available to destroy them. To counter this, nuclear-capable units must deploy early and be dispersed throughout the battle area. Emphasis must be placed on deception, cover, concealment, security, and the prevention of targeting by the enemy. Increased reliance on a combination of dispersion, hardening, movement, and deception will also improve their survivability. Depth of positioning is a command decision. It must be based on the factors of METT-T and weighed against the associated risk. Artillery in the forward area is most vulnerable to detection and destruction; therefore, dispersion and concealment are critical. Nuclear assets must be survivable so that, when required, they are available to execute nuclear fire plans in a timely manner.

While nuclear weapons may be employed singly in certain situations, they normally are employed as part of a package. A package is defined as a discrete grouping of nuclear weapons by specific yields designed for employment in a specified area during a specified period of time and for a specific purpose. Packages may be designed to support strategic, operational, and tactical objectives; and they are planned as far in advance as possible to meet potential battlefield situations. A package is identified and treated as a single entity. A subpackage is planned and/or developed at the division and meets the same criteria as a corps package. The subpackage plan is forwarded to the corps for inclusion in the corps package. The number and type of weapons in a package vary depending on the level of command at which it is developed, the threat, the rnission, the terrain, and population characteristics. For a further discussion of packaging, see Appendix B.

Chemical Weapons Employment Considerations

Missions. Chemical munitions give the commander additional weapons support. The tactical management of chemical ammunition is carried out by allocation of and authority to expend weapons and by prescribing a chemical ammunition load. The FSCOORD recommends to the commander the chemical ammunition allocations, the authority to expend, and the basic loads for those weapons under the commander's control.

Allocations. Allocation is the apportionment of specific numbers and types of complete ammunition rounds to a commander for a stated time period. It is a planning factor for use in the development of war plans. An allocation lets the subordinate commander develop plans based on the allocation of chemical ammunition. Additional authority is required for the actual dispersal of allocated weapons to locations desired by the commander to support his war plans. The expenditure of these weapons is not authorized until release by proper authority. Before receipt of Presidential release, only allocation of chemical ammunition will be made. When Presidential approval is received, the allocating commander may designate all or a portion of the allocation as an authority to expend.

Authority to Expend. A specific number of complete chemical ammunition rounds authorized for expenditure by a commander is termed "the authority to expend." Authority

may be for a specific period of time, for a given phase of an operation, or for the accomplishment of a particular mission. When weapons allocation is changed to authority to expend, the number of weapons fired should be reduced only when absolutely necessary; and notification should be given as early as possible. Restrictions on the types of targets that may be attacked may be specified. Normally, they appear in the operation order or standing operating procedures (SOP), Any commander with an authority to expend may further subassign chemical ammunition to units under his control unless he is instructed otherwise. The authority to expend is related to physical possession of chemical ammunition. However, a commander could receive an authority to expend weapons to be delivered by aerial means, and the tactical Air Force would keep physical custody of the weapons. In accordance with Army doctrine, chemical weapons are authorized to commanders who require and can effectively employ them.

Control. The responsibility for planning, coordinating, and controlling chemical weapons remains at corps until after release has been approved and, most likely, through the first retaliation fires. The detailed planning and coordination are done at division. If our retaliation does not end chemical activities, authority to use chemical munitions can be given to division and brigade. If release is given to brigade, chemical fire planning becomes a coordinated effort with the S3 and FSCOORD playing the key roles. On the basis of guidance given by the division and brigade commanders, the brigade FS cell coordinates with the S2, S3, and chemical officer to select targets for engagement. Following approval by the brigade commander, appropriate nuclear strike warning (STRIKWARN) messages are disseminated to higher and lower maneuver headquarters, FA units, and FS cells.

Mission-Oriented Protective Posture Levels. Mission-oriented protective posture (MOPP) levels provide a standardized method of specifying the degree of protection required from nuclear, biological, and chemical (NBC) threats as determined by the commander.

G3 Air

The G3 air is an integral part of the FS cell at both corps and division. He has staff responsibility for the implementation of the Army air-ground system (AAGS). The G3 air works closely with the ALO and aviation officer at division and with the ASOC at corps in processing air requests. The FSCOORD depends on the G3 air to add maneuver expertise to the FS cell by participating in the preparation and execution of all fire support plans and orders.

Intelligence

The all-source production centers (ASPCs) at both corps and division are closely integrated into the targeting process through the addition of fire support personnel. There is a need to establish direct links between the FS cell and the ASPC. Targeting guidance, established by the commander, should drive the intelligence tasking to support target production. The G2, the G3, and the FS cell must establish decision-making procedures to ensure that a proper balance exists between target production and intelligence production. The United States Air Force (USAF) weather teams at corps and division provide observation and forecasts of weather conditions across the battlefield and intelligence preparation of the battlefield (IPB) products. Forecasts include upper air and cloud conditions which affect smart munitions.

Engineer

The engineer is responsible for advising on the allocation and employment of engineer assets and the consolidation and support of obstacle plans. He has access to engineer topographic and terrain analysis support from engineer

units which may be of value in fire support planning. The assistant division engineer (ADE) at division and the assistant corps engineer (ACE) at corps normally collocate with the G3. However, they work closely with the FSCOORD to ensure that all critical obstacles can be covered by fire. The engineer staff officer coordinates the planning of family of scatterable mines (FASCAM) employment (Appendix C). FASCAM is a limited resource that must be carefully controlled for maximum effectiveness. The FSCOORD ensures that field artillery units are positioned and munitions are available to execute FASCAM missions.

Army Air-Ground System

Army liaison to the Air Force begins with the battlefield coordination element (BCE), which interprets the land battle situation for the TACC. The BCE focuses on planning and executing the interdiction (BAI) battle, while the CAS battle is executed at corps level through the ASOC. The BCE provides coordination channels for the exchange of intelligence and operational data between the Army and Air Force components. The BCE can provide full functional area interface with an Air Force, a Navy, or a Marine Corps TACC, either unilaterally or simultaneously, to effect the full synchronization of Army maneuver and Air Force, Navy, or Marine Corps TACAIR. The BCE is organized in two divisions, as described below.

Operations Division

The primary duty of the BCE operations division is to synchronize Air Force execution of the interdiction targets requested by Army forces and to interpret the ground battle for the supporting Air Force. A fusion section validates BAI targets and provides battle damage assessment (BDA) to the Army. It also maintains a constant exchange of current enemy information with the Army. An operations section monitors the execution of the air tasking order (ATO) and updates BAI targeting data. Army air defense and airspace activities are coordinated with the TACC airspace control center (ACC).

Plans Division

The BCE plans division is responsible for integrating the ground battle planning with the TACC tactical air support planning process. The plans section coordinates Army-planned requests for tactical air support, including BAI, planned CAS, EW, and TAR. The product of this coordination is an air tasking order reflecting those TACAIR nominations from the Army that the air component commander can and will execute. The intelligence section coordinates with Army intelligence agencies to get reports and collection requirements. The airlift section coordinates Army airlift support requirements with the airlift control center (ALCC).

Ground Liaison Officer and Air Reconnaissance Liaison Officer

The Army further provides liaison representatives at each tactical fighter and airlift wing operations center supporting ground operations. Ground liaison officers (GLOs) and air reconnaissance liaison officers (ARLOs) provide Army expertise to Air Force wings and the Air Force reconnaissance squadron. GLOs and ARLOs brief pilots on the ground tactical situation and debrief pilots upon return from missions.

Operations Cell of the Rear Command Post

Division

The division operations cell of the rear CP has a fire support officer (FSO) and two fire

support sergeants to assist in planning for rear operations. They represent the FSCOORD and are responsible for rear area fire support planning and coordination. The FSO coordinates artillery positioning (when applicable) with the rear operations cell; establishes procedures for requesting fire support to include mortars, artillery, attack helicopters, and TACAIR; recommends fire support coordinating measures; and advises the rear operations cell in fire support matters. In heavy divisions, a variable format message entry device (VFMED) at the rear CP provides a digital link to the main FS cell and the division artillery (div arty) CP. All rear CP fire support personnel and equipment are provided by Reserve Component augmentation.

The rear operations (ops) net (FM) provides the primary communications link between the rear CP and the base or base clusters in the rear area. Most rear area units also have access to the division multichannel communications system (MCS) (or mobile subscriber equipment [MSE], when fielded). Since there is no dedicated fire support net for rear operations, the FSO must use the rear operations net or the MCS to plan and coordinate fires. Regardless of the means chosen, the FSO must ensure that all rear area units, to include the tactical combat force (TCF), are aware of the communications procedures (net, call signs, and so forth) to be used to plan, coordinate, and execute rear area fire support. Bases, base clusters, and response forces submit their fire support plans to the rear area FSO. He collates them and coordinates the composite rear area fire support plan with the main FS cell. Calls for fire from a rear element are made to the rear area FSO. He coordinates those requests within the operations cell and with other rear area elements and forwards the request to the main FS cell. The main FS cell determines the most suitable fire support asset available, initiates the request, and notifies the rear FSO of the decision and response.

The TCF designated to interdict and defeat level III threat forces normally includes supporting artillery. One net from the supporting artillery unit may be used as a rear area fire support net, thus improving responsiveness and reducing traffic on the rear operations net.

Corps

The corps operations cell of the rear CP has an FSE consisting of one FSO, one fire support sergeant, and a fire support specialist provided by Reserve Component augmentation. The corps rear CP FSE has no digital interface with the corps main FS cell. The primary communications link between bases, base clusters, rear area operations centers, and the operations cell of the rear CP is MCS. Similar to division, there is no dedicated fire support net for corps rear operations. If a fire support agency (such as an artillery or aviation unit) is designated to support rear operations, one of its nets can be used to plan, coordinate, and execute rear area fire support.

The FSO consolidates fire support plans from subordinate rear area operations centers (RAOCs), response forces, and the tactical combat force for integration into the overall corps rear fire support plan. The FSO establishes procedures for requesting fire support. In the absence of a designated rear area fire support agency, requests for fire are coordinated at the operations cell of the rear CP and forwarded to the main FS cell. (See Chapters 4 and 5 for further discussion.)

CHAPTER 2

FIRE SUPPORT PLANNING AT CORPS AND DIVISION

This chapter outlines the critical actions that must occur during the fire support planning process. A tactical scenario explains what these actions are and how they must occur within the context of a tactical situation. The situation is presented as a snapshot view of an army corps engaged in a mature theater of operations. After describing the corps decision cycle, targeting guidance, and general corps situation, the scenario focuses on the fire support planning that occurs in one of the committed divisions fighting the close battle. Although AirLand Battle doctrine stresses the importance of the corps role in the operational and tactical levels of warfare, the actual fire support planning procedures work in a similar manner at corps and division. Several important aspects of AirLand Battle must be examined as part of the corps fire support planning process. These include:

- *Deep operations planning using fire support and/or maneuver (Appendix B, Section I).*
- *Suppression of enemy air defenses (Appendix B, Section V).*
- *Rear operations (Appendix B, Section III).*
- *Corps nuclear package planning (Appendix B, Section VI).*

Planning Principles

Fire support planning is the continuous process of analyzing, allocating, and scheduling fire support. This chapter lays out the sequence of planning for corps and division fire support in a realistic manner in terms of time and situation. This chapter takes the reader from the time the commander receives a mission to the production of an operation order (OPORD). It concentrates on the coordination between the FSCOORD, the G2, and the G3 that takes place during the fire support planning process. The user should keep the following principles in mind:

- Start planning early, and plan continuously.
- Exploit all available targeting assets.
- Consider the use of all available fire support means, both lethal and nonlethal.
- Follow the commander's targeting guidance.
- Select and use the most effective attack means.
- Provide adequate fire support.
- Avoid unnecessary duplication.
- Provide for the safeguarding and survivability of friendly forces and installations.
- Use the lowest echelon capable of furnishing effective support.

- Furnish the type of support requested.
- Consider airspace coordination.
- Coordinate fire support with other combat power multipliers.
- Provide rapid coordination.

NOTE: These principles are amplified in FM 6-20.

Scenario

The 10th (US) Corps is to be deployed with two divisions forward, an armored division in the north, a light infantry division in the south, and a mechanized infantry division in reserve. The corps mission is to defend its sector and to defeat the first-echelon divisions in the main battle area (MBA) and the second-echelon division and combined arms reserve with deep fires and maneuver. One division in contact is augmented with an armored cavalry regiment; the other, with an armored brigade. The corps reserve has an on-order mission as a counterattack force.

Opposing the corps is a combined arms army (CAA). The army first echelon consists of three motorized rifle divisions (MRDs) on separate avenues of approach. The army second echelon consists of a tank division and an independent tank regiment (ITR). The tank division will be used as an exploitation force; and the ITR may be used to defeat counterattacks, or it may be employed as an additional exploitation force. The assessed mission of the combined arms army is to seize river crossings and overrun air bases in the 10th (US) Corps rear.

SCENARIO

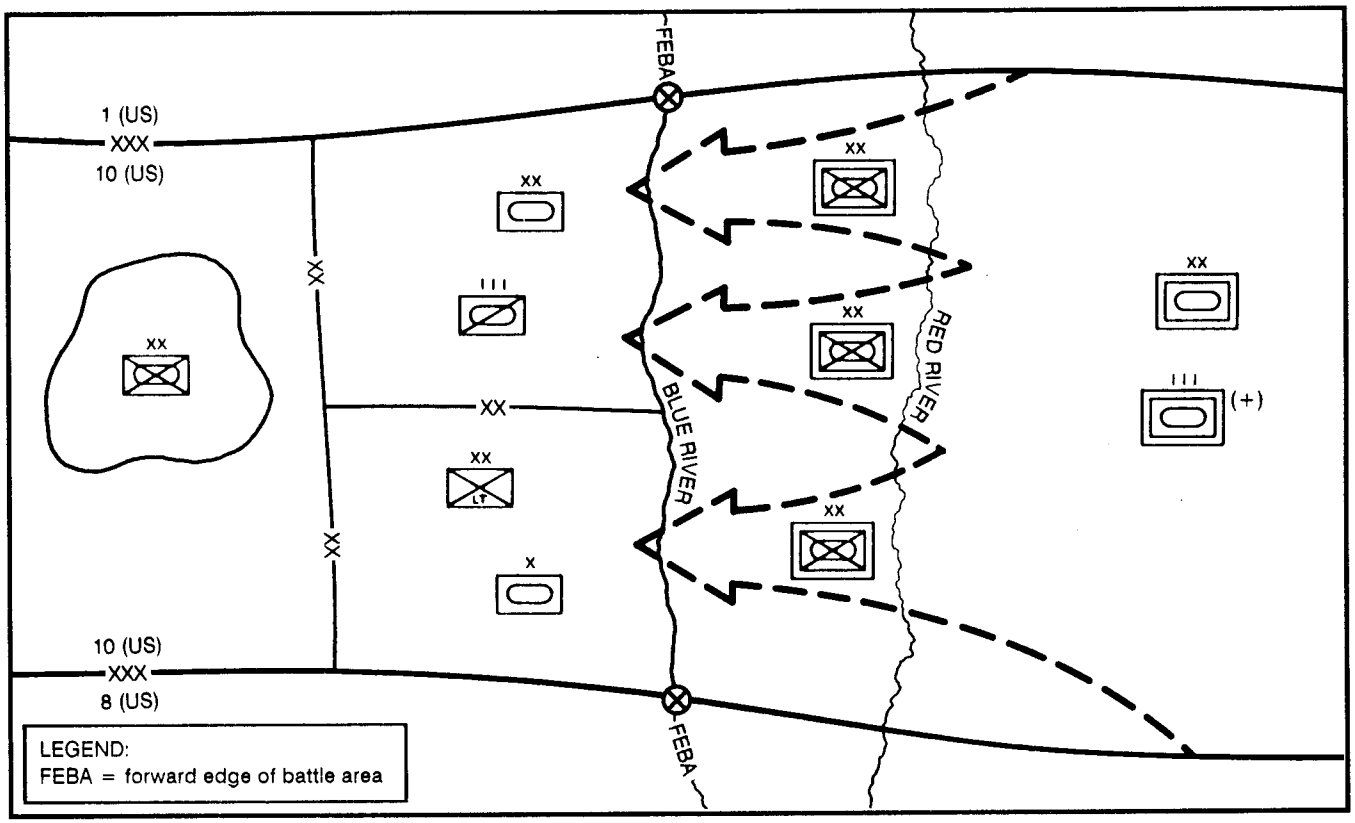

Decision Cycle

The commander and staff use the decision-making process to arrive at and to execute tactical decisions. The decision cycle is designed to direct staff functions to provide a coordinated operation plan (order) to achieve the mission in accordance with the commander's concept of the operation and his intent.

The commander and his staff must begin planning and coordination as soon as practicable. Often, time becomes the most critical factor facing the commander and staff in the decision-making process. The cycle begins with receipt of higher headquarters guidance 96 hours before execution time of the contemplated operation. To ensure that subordinate commanders have enough time for planning, the corps staff must use no more than one-third of the available time to develop and disseminate their plan.

The commander and staff exchange information about the mission, and the staff gives the commander information about the current situation. After that briefing, the corps commander issues his planning guidance to the staff. His guidance normally includes attack guidance, priority intelligence requirements (PIR), and his maneuver planning guidance.

The commander's concept is of major importance to the plans cell. Keying on enemy forces and not specific areas on the battlefield, the corps commander and staff use the concept, together with target value analysis (TVA) and IPB, to determine high-payoff targets and attack guidance. The commander's attack guidance is the basis for target data collection, target development, and attack decisions. Attack execution may remain under centralized control for specific operations such as SEAD, Lance, and electronic warfare ambushes or BAI attacks. Other missions such as electronic countermeasures or counterfire may be centralized.

ATTACK GUIDANCE

	DIVISIONS IN CONTACT	FOLLOW-ON DIVISIONS	FOLLOW-ON ARMY
Units in Priority	XX MRD XY MRD XZ MRD	XX Tank Div ITR	XX Army
Objective	Destroy	Disrupt	Delay
Areas of Interest	Between BLUE and RED Rivers	East of RED River	TAAs and LOCs east of SNOW River
General Targets of Interest	Maneuver Fire support C^3 AD	C^3 Maneuver Fire support ADA	LOCs C^3 Maneuver
Specific Targets in Priority	Tank/recon co RAGs? DAGs? MRL bn MRD CPs SA-8	XX CAA main CP MRR at choke point SSM Longtrack	SNOW River bridges Traffic control points TAAs
Additional Guidance	Priority of CAS to JATT in AD sector	Coordinate J-SEAD for BAI package	Coordinate AI with theater army

LEGEND:
bn = battalion
co = company
DAG = division artillery group
div = division
J-SEAD = joint SEAD
LOC = line of communication
MRL = multiple rocket launcher
MRR = motorized rifle regiment
RAG = regimental artillery group
recon = reconnaissancemissile
SSM = surface-to-surface
TAA = tactical assembly area

The attack guidance format at corps separates close and deep operations into three areas of concentration

- Enemy divisions in contact. These are the responsibility of the corps or division in contact. The corps gives support to the divisions; but it may take direct control of certain operations such as counterattacks, corps-directed SEAD, or cross-FLOT insertions.
- Enemy follow-on divisions. The primary area of responsibility falls beyond the division area of operations out to the limits of the corps area of influence. Corps depends on fire support, air power, and nonlethal methods for the attack of follow-on forces in this area.
- Enemy follow-on army. This relates to the corps area of interest. In this area, the corps nominates targets to theater army for inclusion in its campaign.

The 10th Corps received a mission for planning to defend in sector against elements of a Soviet front. Both the corps commander and the staff conducted a hasty mission analysis. Then the corps commander issued planning guidance to the staff. His guidance included initial PIR and attack guidance as follows:

> "Our mission is to defeat the first-echelon CAA of the front in our sector. Since the enemy may commit the army by echelon, plan for using the forward divisions to defeat the first-echelon divisions. We must

identify the location of the main effort early so we can effectively counter it. Our intel must also watch for the timing and locations of commitment of the follow-on army to the CAA. We cannot allow it to commit while we're still fully employed with the CAA. If it becomes a threat, delay it 24 hours. Work up some options in accordance with the guidance, and provide a recommendation in 12 hours."

Having received the above planning guidance, the staff begins staff estimates, initial coordination, and course-of-action development. The FSCOORD and his planner, in conjunction with the G2, G3, ALO, Army aviation, engineers, EW, ADCOORD, and logistics, make a fire support estimate for each course of action, to include tentative attack guidance.

Approximately 64 hours before the operation, the corps plans officer presents the staff's courses of action and recommendations to the commander for decision.

After receiving the corps commander's decision, the staff issues a warning order and begins preparing an OPORD. The fire support planner prepares the Fires paragraph of the fire support annex and the fire support task organization portion of the OPORD. (See Appendix D.) He continues close coordination with those staff sections listed above to ensure that the plan remains synchronized with the developing situation.

As the corps planners complete and publish the OPORD, it is transferred to the divisions about 50 hours before execution. The OPORD is modified as the situation dictates.

Division Commander's Actions on Receipt of the Mission

Tactical planning begins with the assignment of a mission or with the commander's recognition of a requirement. In this case, the light division commander has been assigned his mission. On return to the division, and before conducting his mission analysis, the commander needs information from his staff. In particular, he requires the G2's analysis of the battlefield areas (see FM 34-l). He will also ask for information from other staff members so he can analyze the mission and determine its key elements. He must deduce –

- What must be done.
- What tasks are specified in the mission.
- What implied tasks are required to accomplish the mission.

After studying the corps OPORD and the battlefield area analysis and analyzing the threat, the division commander identifies the purpose of the division operation and the corps commander's intent. He then identifies the specified and implied tasks in the OPORD. He further identifies the tasks that are **essential** to the accomplishment of his mission. The division commander then restates the division mission and gives planning guidance to his staff.

FSCOORD's Actions on Receipt of the Mission

While the division commander is conducting his mission analysis, the FSCOORD makes his preliminary analysis of the fire support mission. He studies the corps OPORD, keying on his specific areas of responsibility. He must identify specified and implied fire support tasks that are in the OPORD as well as factors that must be considered when planning courses of action with the G3.

Factors that should be considered when developing offensive and defensive courses of action are discussed in Chapters 4 and 5. As the FSCOORD is collecting information that will affect the performance of the fire support mission, he should list them under the METT-T headings as discussed below.

Mission

The mission statement used in the estimate should be a brief statement of the commander's intent and should detail all specified and implied tasks. The value of the estimate largely depends on the correct definition of the mission, which should give, in simple terms, a full picture of the desired result. If the mission statement is wrong, the commander's intention may not be achieved.

NOTE: At this stage, the FSCOORD does not have the commander's restated mission to use. However, he does have the corps OPORD. From this, he deduces the tasks to be performed by the division and for which he must provide fire support.

Enemy

Most of the required Threat information comes from the division G2 and the intelligence annex to the corps OPORD (which the FSCOORD should have). A field artillery intelligence officer (FAIO) is in the division fire support element. Through him, the FSCOORD should give the FS cell a continuous flow of information from the G2's IPB and the situation development and target development processes. The FSCOORD also gets enemy information from the commander's planning guidance when he issues it. The type of Threat information the FSCOORD must get from the G2 is outlined in FM 6-20-10.

Terrain and Weather

The corps G2's analysis of the battlefield area, begun long before hostilities, provides most of the terrain and weather effects on the enemy and friendly courses of action. The division G2 uses the corps G2's analysis, supplemented by IPB information pertinent to the division. The analysis includes contributions from the engineer's terrain study, climatological studies, and weather forecasts. The FSCOORD must obtain, through the FAIO, comprehensive terrain studies and weather forecasts. He considers how these factors affect weapon systems employment for deep, close, and rear operations.

Troops Available

At this stage, the FSCOORD is mainly concerned with ensuring that all fire support resources available to the division are considered throughout the development of the courses of action. He researches the corps OPORD to ascertain the following:

- Assigned, attached, and OPCON maneuver units available for commitment.
- The corps field artillery organization for combat and priority of support.
- The allocation of air support.
- Combat service support resources available for the operation.

The G3 works on a similar list against which the FSCOORD should compare his own. Once developed, this force list is a constant for each course of action developed by the G3. It does not preclude the FSCOORD from requesting additional resources at a later date, if required.

Time

The only information available for the FSCOORD to use at this stage comes from the corps OPORD. The OPORD may include the corps commander's requirements for when area reconnaissance can begin, when the force is to have completed the preparation of division defensive areas, movement timings, anticipated phase timings, or the time by which the force must be ready in all respects. As the planning process progresses, the FSCOORD will gain more information that will allow him to consider the time factor in relation to the tasks outlined in Appendix A, Section III.

Commander's Planning Guidance

Once the commander has completed his mission analysis, he restates the mission and issues his planning guidance to the staff for their consideration when preparing individual staff estimates. Among other things, his guidance should include information of particular concern to the FSCOORD on the following:

- His perceptions of the most dangerous types of targets. The FSCOORD should group these as follows:
  - Close support.
  - Counterfire.
  - Interdiction.
  - SEAD.
  - Offensive counterair.
- What he expects the fire support system to contribute to the operation in the way of –
  - Supporting forces in contact.
  - Providing fire support that is immediatly responsive to the-force commander.
  - Synchronizing with the scheme of maneuver.
  - Sustaining the fire support effort.
- Specific constraints on the employment of fire support resources.

Example Mission Restatement and Guidance

An example of how the division commander may go about restating the mission and issuing planning guidance is discussed below.

Commander's Intent. The commander's intent is stated as follows:

> "I intend to defend well forward in sector with a strong covering force in order to defeat the MRD and set the preconditions for offensive operations."

DIVISION COMMANDER'S CONCEPT

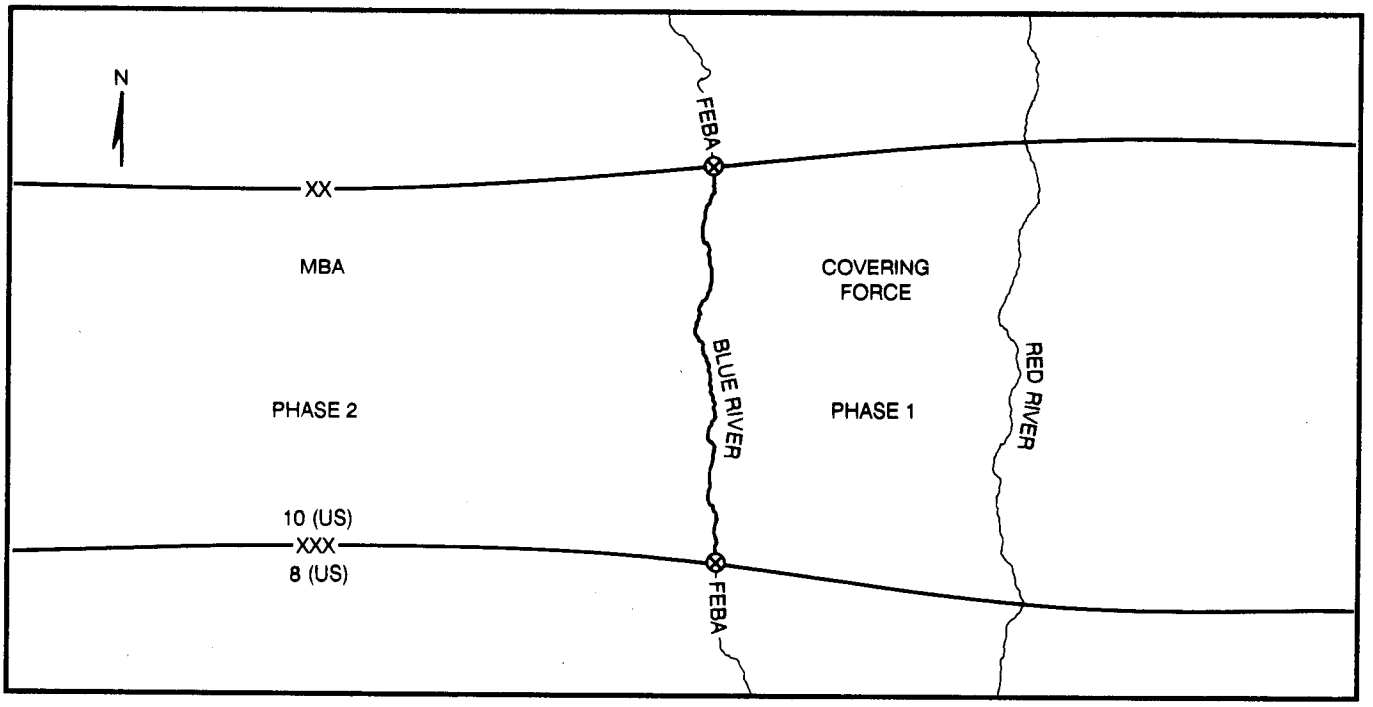

Restated Mission. The restated mission is:

> "On order, the division establishes a covering force east of the BLUE River. On D-day, H-hour, conducts defensive operations in the security area and the MBA to destroy the first-echelon assault regiments. Defends in sector in the highly restrictive terrain west of the BLUE River to hold the second-echelon regiments in place as a fixing force in front of the corps counterattack by the 22d Division. Supports corps offensive plan on order."

NOTE: The restated mission now becomes the basis for the commander's and staff estimates. It Is paragraph 1 of these estimates, whether oral or written. During the estimate process, the restated mission may be refined and changed as required. The commander makes the final decision on what the mission statement will contain.

Constraints. The commander also noted the following constraints from the corps OPORD:

> "Use of the ACR is restricted to the covering force operation and defense of the intermediate position.
>
> "No ground maneuver across the RED River is authorized without approval from corps headquarters."

FSCOORD'S Considerations. Based on the commander's planning guidance, the factors discussed below are samples of those the FSCOORD would consider during planning.

The FSCOORD would consider destruction of the enemy fire support system before he has the bulk of his artillery within range of our defensive positions. This means that deep target acquisition and attack of counterfire targets before and during the covering force operation must be considered. Also, the FSCOORD should consider the possibility of a night infiltration into the enemy flank to interdict his C^3 and lines of communication (LOCs). The FSCOORD coordinates with the G2 to focus surveillance and target acquisition assets to locate and identify Threat second-echelon units. Once the units are identified, the attack decision is confirmed, depending on the situation at the time. Nuclear fire plans must be submitted to corps well in advance to facilitate execution by reinforcing corps artillery.

In general, the FSCOORD concentrates planning efforts initially on the covering force and intermediate position battles. Then he focuses on coordinating the MBA defense. He also should consider using the division aviation brigade to attack high-payoff targets in depth. In this type of operation, ammunition stocks must be pre-positioned for each phase of the operation. The division is responsible for supply of ammunition to artillery units organic to the separate armored brigade and the ACR. The FSCOORD coordinates with the G4 to ensure that the required ammunition can be positioned in time.

Possible Courses of Action

During his mission analysis, the commander may have considered some possible courses of action. If so, he would state them at this point. In this example, the division commander gave the staff courses of action to consider. The G3 is responsible for developing at least one other alternative for comparison. An explanation of how he goes about this task and the part the FSCOORD must play are in Appendix B. In the meantime, there is much the FSCOORD and his staff can do to begin the fire support estimate, to prepare to help the G3 in his development of the courses of action, and to prepare the subsequent analysis of those courses of action.

Staff Actions

While the G3 and G2 are collecting information from the IPB for use in development

of courses of action, the FSCOORD and his staff must continue collecting information and listing the factors of METT-T that will affect the provision of fire support. The FSCOORD should have gained an initial appreciation of the situation from the intelligence annex to the corps OPORD, the commander's mission analysis, planning guidance, and the division G2's situation and target development processes. These processes give the commander and staff the intelligence needed to fight the AirLand Battle. Each is a distinct task, yet both must be integrated totally to provide an accurate picture of the battlefield. Both tasks incorporate IPB and focus on the commander's areas of operation and interest. The G2 uses IPB to produce a description of enemy force disposition on the battlefield in terms of location, size, type, direction and rate of movement, and activity.

Situation Development

Situation development provides an estimate of enemy intentions in the following form:

- Knowledge of the weather and terrain throughout the areas of operation and interest.
- Knowledge of the enemy, to include:
  - Organization.
  - Equipment.
  - Tactics (how he fights).
  - Strengths and weaknesses of his dispositions.
  - Capabilities, limitations, and patterns of particular units.
  - Operational, technical, and human weaknesses.
  - Intentions.
  - Probable reactions.

Target Development

Based on situation development, target development is the process of providing direct combat information, targeting data, and correlated targeting information to commanders and fire support means. It gives the commander timely and accurate locations of enemy high-payoff targets that are predicted to impact on current or projected operations. Targeting data must be accurate enough to support effective attack by fire, maneuver, or electronic means. (The target numbering system is discussed in Appendix E.)

Staff Estimates

Once the commander has given his guidance and the courses of action have been developed, the staff can begin to prepare estimates. It must be kept in mind that the different staff elements and the personnel associated with them have widely disparate functions and responsibilities and that they are often separated by great distances. Therefore, for successful mission accomplishment, they must effect constant coordination and keep each other aware of the requirements.

The G3 is the focal point during the estimate process, and he is responsible for ensuring coordination between the different staffs. The ways in which the different estimates affect the fire support estimate are outlined in FM 6-20. Here we will discuss only the fire support estimate.

Fire Support Estimate

The fire support estimate is an informal procedure that yields a dynamic mental process that may or may not be written down by the FSCOORD. It helps him to integrate and synchronize the employment of fire support resources within the fire support system and with the force scheme of maneuver.

The fire support estimate is a realistic appraisal of the effort required to support the

operation. It serves as a basis for identifying priority fire support requirements.

Any variable which could affect the mission is a factor. Before starting the estimate, all relevant information must be collected from all available sources. Once this information has been assembled and the factors that could affect the plan have been identified, they should be listed and arranged in priority. Examples of the factors that may be considered are as follows:

- The task organization of subordinate forces and their missions.
- The availability of field artillery resources, including cannons, multiple launch rocket systems (MLRSs), missiles, ammunition (conventional, nuclear, and chemical), and target acquisition assets.
- The availability of other fire support resources, including mortars, NGF, tactical air support, and Army aviation support. Also included are EW and other intelligence-controlled surveillance assets.
- In the attack, the enemy dispositions (including frontage and depth), the degree of protection afforded the enemy, objectives for subordinate forces or units, the number of phases, and the likely frontage and depth of the assault. These will affect the allocation of fire support resources to subordinate units.
- In the defense, the mission of the covering force, the frontage and depth of the main battle area, the contingencies for counterattack, and considerations for deep and rear operations.
- The speed of movement to contact and withdrawal.
- In light forces, the force antiarmor plan.
- Courses open to the enemy artillery commander, especially his most probable course of action. These are derived from the intelligence estimate and knowledge of enemy artillery doctrine. Consideration of this factor results in –
  - The probable enemy artillery plan.
  - Enemy artillery vulnerabilities.
  - Enemy nuclear and chemical capability and posture.
  - Any information requirements on enemy artillery which have significant influence on the tasking of weapons-locating sensors.
  - The allocation of resources, weapons, and munitions for counterfire.
  - Measures to reduce the vulnerability of our force.
  - The recommended counterfire priorities for each phase of the battle (by the designation of critical friendly zones and enemy weapon systems).
- The enemy EW situation.
- The identification of high-payoff targets (derived from TVA and IPB).
- The commander's information requirements (derived from the intelligence estimate).
- The availability and condition of roads, trails, and likely position areas. This leads to the coordination of movement and position areas with the operations staff.
- Ammunition consumption factors (type and quantity), pre-positioning requirements, and priority of combat service support (CSS).
- The effects of survey and meteorological (met) upper air data and forecast weather conditions on the ability to guarantee timely and accurate fire support (to include weapon and target acquisition assets).
- The reliability and range of communications.

- The time required for positioning and technical preparation to engage targets.
- The time to be ready to support the operation.
- Development of an initial nuclear analysis based on preclusion-oriented target analysis methodology.
- Formulation of corps nuclear packages or division subpackages (area, yield or number of weapons, time) for each contingency as identified by the G3.
- Allocation of nuclear weapons for corps packages and division subpackages.
- Development of plans to prevent collateral damage.
- Development of a schedule of nuclear strikes in a package area. This includes preinitiation avoidance and joint scheduling of nuclear targets.
- Target-oriented method of target analysis using latest intelligence for refinement of aimpoints.
- Transmission of warning order to nuclear-capable units alerting them of pending nuclear strike(s).
- Maintenance and revision of Threat list as current intelligence becomes available.
- The availability of nuclear weapons at firing units.
- The distribution of and accountability for these nuclear weapons.

Mission

As mentioned earlier, the mission statement in this case is that of the division to be supported. The FSCOORD also should list the constraints that were noted from the corps OPORD, commander's planning guidance and intent, and known factors that could affect performance of the mission.

Situation and Courses of Action

Tactical Situation

The FSCOORD must know the intended dispositions of the major elements of the supported force at the beginning of the operation and at those stages of the operation when reassessment of fire support tasks may be required. He gains this information during the G3's development of each course of action and from resultant sketches. The FSCOORD should establish any special fire support requirements needed at the beginning of the operation and at each subsequent stage. Intelligence preparation of the battlefield, the target development process, and the scheme of maneuver provide the factors to be considered by the FSCOORD and his staff when producing a fire support plan. The IPB and the target development process are the responsibility of the G2, who is also charged with the dissemination of the data they provide. The FSCOORD plays a vital part in the target development process by conducting TVA and advising on the most suitable fire support assets with which to attack specific targets. For more detailed information, refer to FM 34-1 and FM 6-20-10.

Tactical Courses of Action

The commander's restated mission and planning guidance may indicate a number of possible courses of action for the scheme of maneuver. If not, they are developed during the G3's operations estimate and passed on to other staff. The FSCOORD must consider the factors that affect each course, in turn, to determine whether it can be supported effectively with fire support. Examples of factors that should be considered in the defense and offense are given in Appendix B.

Logistics and Communications

Factors that affect fire support logistics and communications will arise during consideration

of other factors that affect the mission. These should be listed and resolved during the planning process. Occasionally, a separate estimate may be necessary to determine whether a particular course of action can be supported logistically.

Analysis of Courses of Action

The FSCOORD and the other staff officers must work together to analyze the courses of action. The FSCOORD should have already prepared for the analysis stage by examining each course of action as explained above. During the joint consideration of factors affecting each course of action, these personnel war-game each course against probable enemy actions to see how the battle will progress. They visualize the battle in depth to determine how deep attacks can support the plan. They fight each action up to and including mission accomplishment to determine the risks involved and the probable success of each course. The FSCOORD's previous assessment of the courses may cause him to advise against those that prove to be impractical from a fire support point of view. To do this, he must mentally–

- Attack emerging targets with the most effective system.
- Determine the tasks and requirements for all fire support resources.
- Consider proper distribution of assets for close support of maneuver elements, for counterfire, for interdiction, and for SEAD.
- Visualize the indirect-fire-unit movements required to follow the battle flow.
- Consider logistic needs and their impact on the battle.

As the war gaming progresses, the FSCOORD formulates a list of advantages and disadvantages of each course from a fire support point of view. Then each course of action is listed and followed by a concise statement of its advantages and disadvantages.

Comparison of Courses of Action

After the analysis, the G3, G2, and FSCOORD compare the advantages and disadvantages of each course of action to determine which promises to be most successful. The result of this consideration is a recommendation to the commander to be used as a basis for deciding his concept of the operation.

Recommendation

The FSCOORD translates the recommended course of action selected by the G3, G2, and himself into a recommendation that normally is presented informally. It is actually a statement which addresses the following:

- Allocation of fire support resources.
- Artillery organization for combat.
- Command and control relationships.
- Priority of effort.

Commander's Concept of the Operation

After all courses of action have been war-gamed and analyzed and their advantages, disadvantages, and risks have been identified, the commander decides which course of action to follow. He then states his concept of the operation in his completed estimate. Included are his decisions on who performs elements of the mission and his intent during all phases of the operation. His concept and intent form the basis for paragraph 3a, Concept of Operation, in the operation order. The commander's staff, to include the FSCOORD, now have the necessary information to examine their areas of responsibility in detail and to prepare operation plans and/or orders for the commander's approval.

Discussion of Concept of Operation Paragraph

This is a statement of the commander's intent which expands **why** the force has been tasked to do the mission stated in paragraph 2. It tells **what** results are expected; **how** these results facilitate future operations; and **how,** in broad terms, the commander visualizes achieving those results (force as a whole). The concept is stated in enough detail to ensure appropriate action by subordinates in the absence of additional communications or further instructions. The **who** that will accomplish the concept of operation will be In subparagraphs to paragraph 3a. Style is not emphasized, but the concept statement should not exceed five or six sentences written or personally approved by the commander. If an operation overlay is used, it is referenced here; however, the concept statement must be present as paragraph 3a and on the overlay.

After the concept of the operation has been formalized, the G3, G2, and FSCOORD produce a tentative high-payoff target matrix. This matrix provides further guidance to the elements engaged in targeting and allows them to prioritize the acquisition and engagement efforts. The FSCOORD also must finalize –

- The allocation and positioning of fire support assets.
- Plans for the provision of target acquisition assets, survey, and met support to subordinate units.
- Logistic support for subordinate units.

Orders and Plans

An operation order is a commander's directive to subordinate commanders for the purpose of effecting the coordinated execution of an operation. For clarity and efficiency, these orders follow a specific format as described in FM 101-5. Fire support directives are published as discussed below.

Fire Support Plan

The fire support plan contains the information necessary for understanding how fire support will be used to support an operation. It is a subparagraph of paragraph 3 of the OPORD. It should include a subparagraph for each type of fire support involved. Nuclear fire support and chemical fire support usually warrant their own subparagraphs under fire support. Appropriate fire support liaison representatives prepare their respective paragraphs. The FSCOORD combines these subparagraphs into the fire support plan. If the fire support plan includes a target list, it reflects only those targets the commander thinks are critical to his operations. See Appendix D for an example of a division fire support plan. The FSCOORD must also ensure that the fire support plan gives enough commander's guidance to ensure sufficient information is available for FA automatic data processing (ADP) systems (for example, all commander's criteria inputs for the tactical fire direction system [TACFIRE]).

Annex to the OPORD

If the operation requires lengthy or detailed plans or if paragraph 3 becomes unwieldy, a fire support annex to the OPORD may be prepared. It amplifies the instructions in the fire support plan.

Appendixes to the Annex

Specific support plans for each' type of fire support (FA support plan, air support plan, nuclear support plan, and chemical support plan) are prepared, as needed, to amplify the fire support plan.

Enclosures to an Appendix

Depending on the plan, overlays, target lists, and schedules may be attached for clarity and amplification.

Target Overlay. This overlay is a display of targets, fire support coordinating measures (see Appendix F), and positions for indirect-fire weapons. The planner uses it to help resolve duplication, evaluate the adequacy of planned support in relation to battle plans, and determine the most appropriate unit(s) to attack each target.

Target List. This is a compilation of targeting data prepared in support of an operation. It contains data extracted from the target list work sheet. It contains only targeting data required for the computation of technical firing data. Automatic data processing also provides a fire plan target list.

Schedule. Schedules contain the same information shown on the scheduling work sheets. However, schedules are in a format that is easier to duplicate and transmit to firing units. Automatic data processing provides targets for the schedule of fires.

Changes. Any changes to TACFIRE SOP may be attached as an enclosure.

Tabs to Enclosures

Tabs to enclosures may include sensor taskings for –

- Moving-target-locating radar (MTLR).
- Weapons-locating radar (WLR).
- Unmanned aerial vehicle (UAV).
- Aerial fire support observer (AFSO).
- Observation posts (OPs).
- Combat observation/lasing team (COLT).

NOTE: The complete fire support planning sequence is shown in the flow chart on the next page.

FIRE SUPPORT PLANNING SEQUENCE

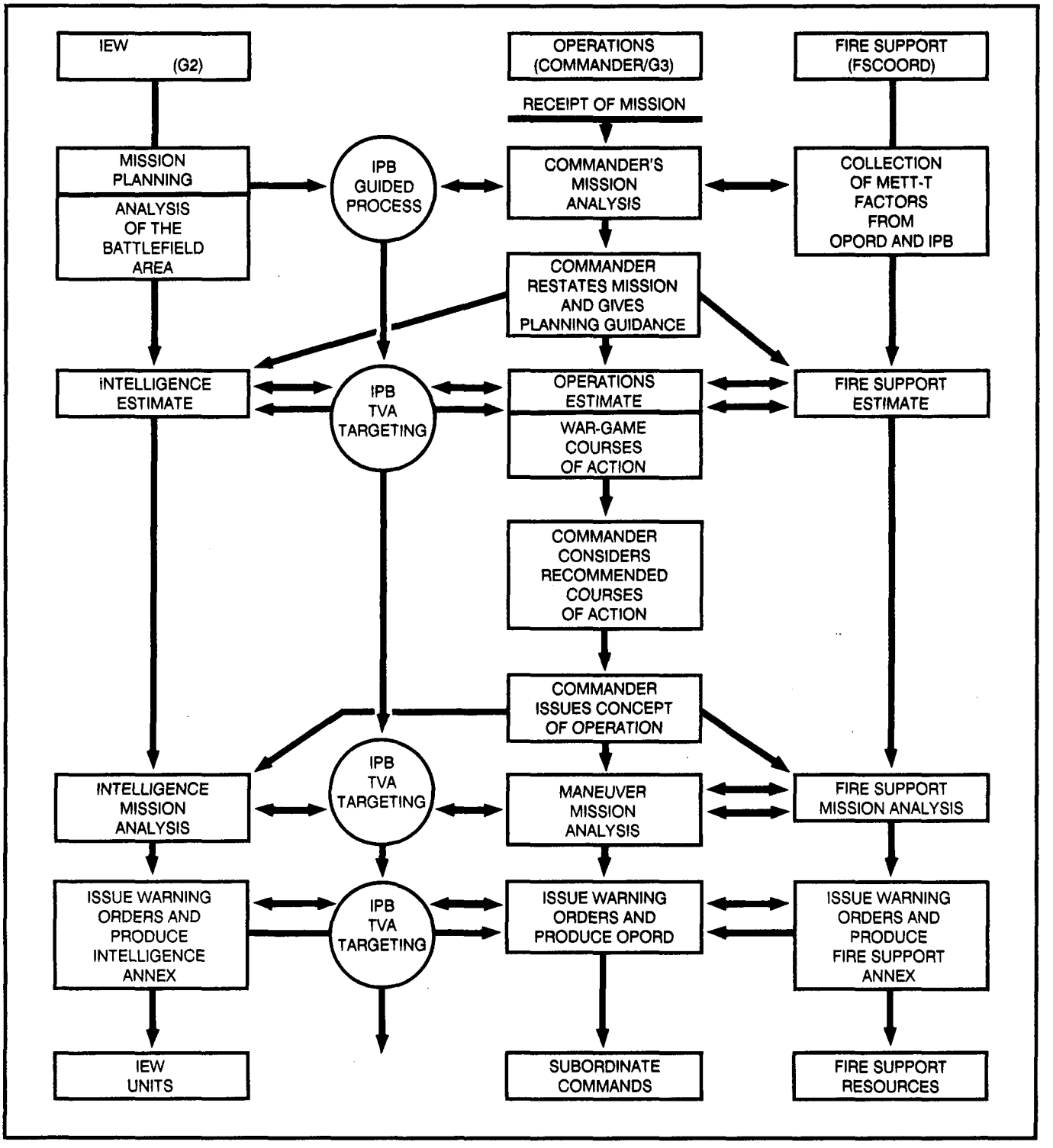

CHAPTER 3

JOINT FIRE SUPPORT OPERATIONS

Most operations envisioned for US Army corps and divisions will be joint operations. During these joint operations, a significant portion of fire support will be provided by other services. Similarly, Army corps and divisions will be required to provide fires to support those services. Previous chapters explained the duties of fire support personnel of other services. This chapter explains the specific procedures that FSCOORDs at corps and division use to coordinate tire support in joint operations. This chapter presents discussions on the several aspects of joint operations as follows:

- USAF air support.
- Amphibious operations.
- Suppression of enemy air defenses.
- Joint fire support communications.

USAF Air Support

The USAF provides tactical air support to the Army as one of its primary missions. The tactical air control system and the Army air-ground system bring together the Air Force and Army components to conduct tactical air support for the Army and SEAD support for Army aviation and the Air Force during joint operations. The TACS and AAGS do this by –

- Establishing the personnel, facilities, and communications interface necessary for centralized control of available air support by the air component commander.
- The decentralized execution of air attacks in priorities as prescribed by the joint force commander.

Centralized control of assets allows the air component to fully exploit the flexibility of assigned or attached air resources. The TACS provides liaison through all Army echelons down to battalion level. The Army counterpart of the system is the Army air-ground system. The AAGS gives the ground force commander the organization and means to process, evaluate, and coordinate requests for air support and tactical air reconnaissance and to continuously exchange combat information and intelligence with the air component.

Air Force Missions

The Air Force missions that most directly affect Army operations are the air interdiction mission, to include battlefield air interdiction, and the close air support mission.

Air Interdiction

Air interdiction is defined as air operations conducted to destroy, neutralize, or delay the enemy's potential before it can be brought to bear effectively against friendly forces and at such a distance from friendly ground forces that detailed coordination is not required. Typical AI targets might include enemy surface forces in the follow-on echelons, road and rail networks, C3 nodes, and supply depots.

TACS-AAGS ORGANIZATION AND PERSONNEL INTERFACE

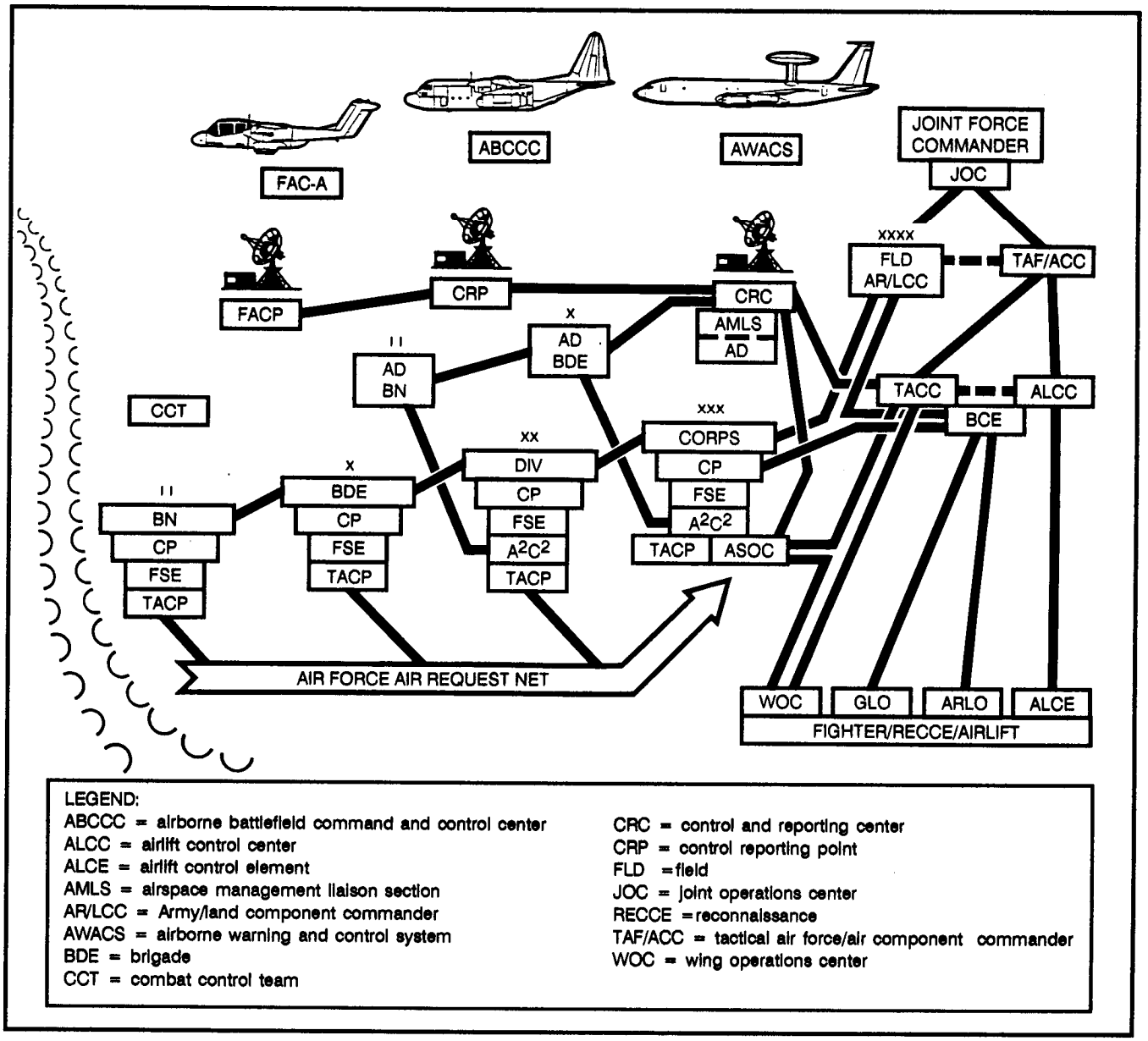

LEGEND:
ABCCC = airborne battlefield command and control center
ALCC = airlift control center
ALCE = airlift control element
AMLS = airspace management liaison section
AR/LCC = Army/land component commander
AWACS = airborne warning and control system
BDE = brigade
CCT = combat control team
CRC = control and reporting center
CRP = control reporting point
FLD = field
JOC = joint operations center
RECCE = reconnaissance
TAF/ACC = tactical air force/air component commander
WOC = wing operations center

Battlefield Air Interdiction

BAI is an Air Force task within the framework of the AI mission. The AI attacks conducted against hostile land forces that are not in close proximity to friendly forces are referred to as battlefield air interdiction if the hostile forces could have a near-term effect on the operation or scheme of maneuver of friendly forces. Prior coordination is required between the Army and the Air Force for attack of BAI targets. BAI has a direct or near-term effect on surface operations.

Close Air Support

CAS is air action in support of ground operations against hostile targets that are in

close proximity to friendly forces and that require detailed integration of each air mission with the fire and movement of these forces.

> **NOTE:** Close proximity means that friendly forces and/or noncombatants are close enough to the target that care must be taken to avoid casualties from air-delivered weapons effects.

A joint air attack team is a combination of Army attack helicopter teams and tactical aircraft (usually CAS) supported by field artillery, operating together to simultaneously attack a single target or target array. Normally, the JAAT is an expansion of CAS in that it usually is employed close to friendly troops as an integrated member of the combined arms team. However, it can operate independently away from ground units. The relationship of AI, BAI, and CAS to the corps battlefield is shown in the illustration below. A summary of their characteristics is shown in the table. Of course, when dictated by the tactical situation, CAS and tactical surveillance and reconnaissance may also take place in the MBA or in rear areas. The illustration shows only the battlefield forward of the forward edge of the battle area (FEBA) and/or the FLOT.

AI, BAI, AND CAS ON THE BATTLEFIELD

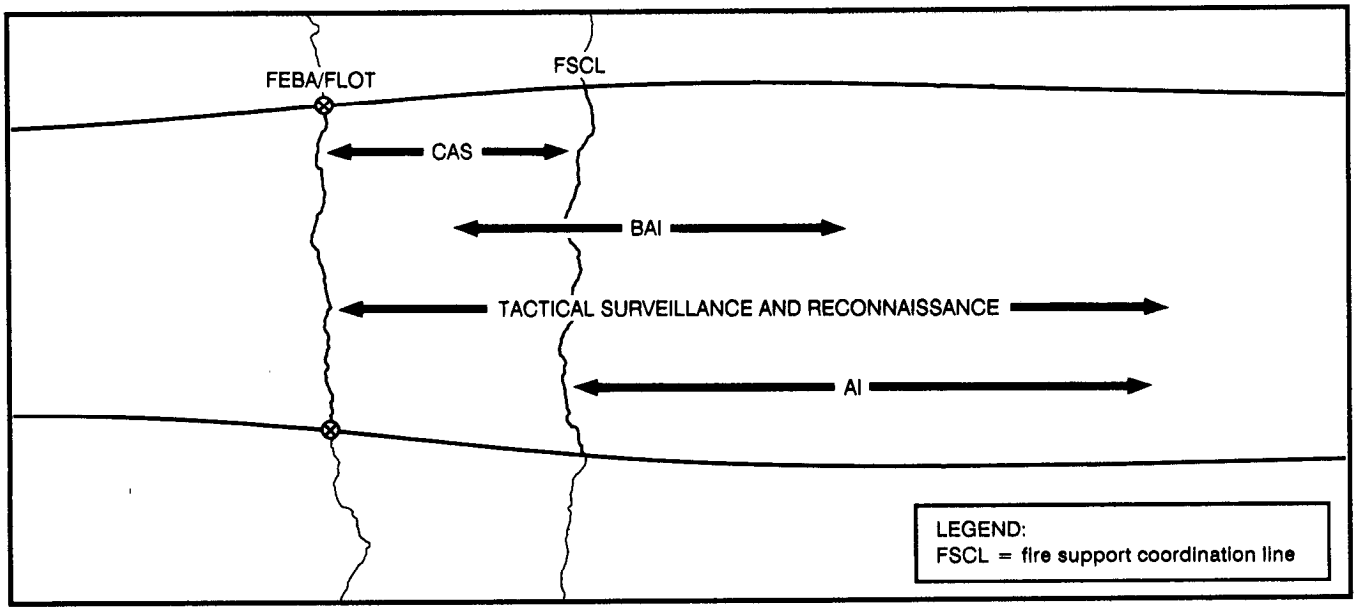

CHARACTERISTICS OF AI, BAI, AND CAS

	AI	BAI	CAS
Target	Indirect	Directly affecting friendlies	
Area	Beyond FSCL	Both sides FSCL	Close proximity
Coordination	Joint planning and coordination		Detailed integration
Control	None required		Direct or indirect

Planning and Requesting Tactical Air Support

The joint force commander decides on the objectives and priorities for the employment of air assets. The land component commander and the air component commander negotiate on a recommended apportionment of air assets to meet the various requirements anticipated. This process results in an apportionment recommendation, usually around 72 hours before active execution. On the basis of this recommendation, the tactical air control center gives the corps main CP initial planning guidance for the number of sorties expected to be available for BAI and CAS. This initial planning information is only tentative. However, it is a basis, or a start point, for battle planners at the corps main CP to begin the estimate process for the corps plan that will commence 72 hours later. The estimate process should include the corps commander's decision on the following:

- Priority for the TACAIR to subordinate divisions.
- AI target and priorities.
- BAI target and priorities.
- Percent of the CAS to be retained for immediate requests.

The G3 air, G2, and FSCOORD together must work out which targets developed or to be developed for the planning period should be attacked with air assets instead of with surface fires. A prioritized initial BAI target list is developed and passed to the battlefield coordination element. Any targets that are identified as AI nominations are passed separately to the BCE.

The targeting process conducted during this period must include predictions of target types and confirmed targets that will logically be expected to move before they are attacked. Target value analysis energizes the targeting process by identifying the types of targets that will most affect planned operations. Given the anticipated targeting requirements, Army intelligence collection and acquisition assets are used to develop an appreciation of the enemy for that time period. Air Force reconnaissance assets also must be considered for inclusion in the targeting process. Both the current Air Force tactical intelligence data base and the current tactical air reconnaissance operations can provide usable target information during these initial planning phases. Refinement of target information is a continuous process up to the time of the launch of attack aircraft. Information for the initial BAI list should include the following:

- Target type; for example, a free rocket over ground (FROG) missile site.
- Location — universal transverse mercator (UTM) grid coordinates or latitude and longitude location.
- Desired effects; for example, destroy, neutralize, or harass.
- Time on target expressed as a specific time, a not-later-than time, or an inclusive time period.
- Air request number.

Certain types of targets may be dynamic in nature; or certain attack considerations may affect how, when, and where the target is attacked. In these instances, mission-type requests are acceptable. For example, "Stop armor movement east of the RED River" is understood by and acceptable to TACC mission planners and to weaponeers.

Planning for BAI in the 72 hours forward time period necessarily entails developing targets of interest to corps-level operations. However, targets that may have an effect on anticipated division operations during the ATO effective period also must be considered. Planning targets in the division zone of action, accepting

BAI nomination, and establishing CAS allocation priorities help ensure that subordinate divisions receive effective air support for their respective operations. The corps FS cell, ASOC, and G3 air continue to develop BAI plans for each ATO period up to 72 hours (today's campaign and 24, 48, and 72 hours out). BAI targeting may include mobile targets; thus, a frequent dialog is required between the corps main CP and the TACC to provide accurate target information.

The prioritized BAI target list is forwarded to the BCE by use of the joint tactical air strike request or the US message text format/air support request. The target list also may be transmitted by voice by using information in either of those formats. The BAI target list should include alternate targets to be attacked should the target or tactical situation change as the time of target attack draws near. In the case of mobile targets, fixed targets, such as bridges and logistical and communications sites, should be nominated as alternates if they still support the BAI campaign effort.

Unforeseen real-time situations sometimes develop that would significantly change planned TACAIR support near or even during the ATO effective period. In these situations, the LCC may change his allocated air support to fit the real-time contingency. This could include diverting BAI missions to higher-priority targets or reallocating CAS missions to meet a close battle emergency, for example. Aggressive and timely coordination with the air component through the BCE and the ASOC will ensure TACAIR efforts are redirected as necessary to meet the new requirements.

PLANNING FOR BAI AND PREPLANNED CAS, NOTIONAL CORPS OPERATION

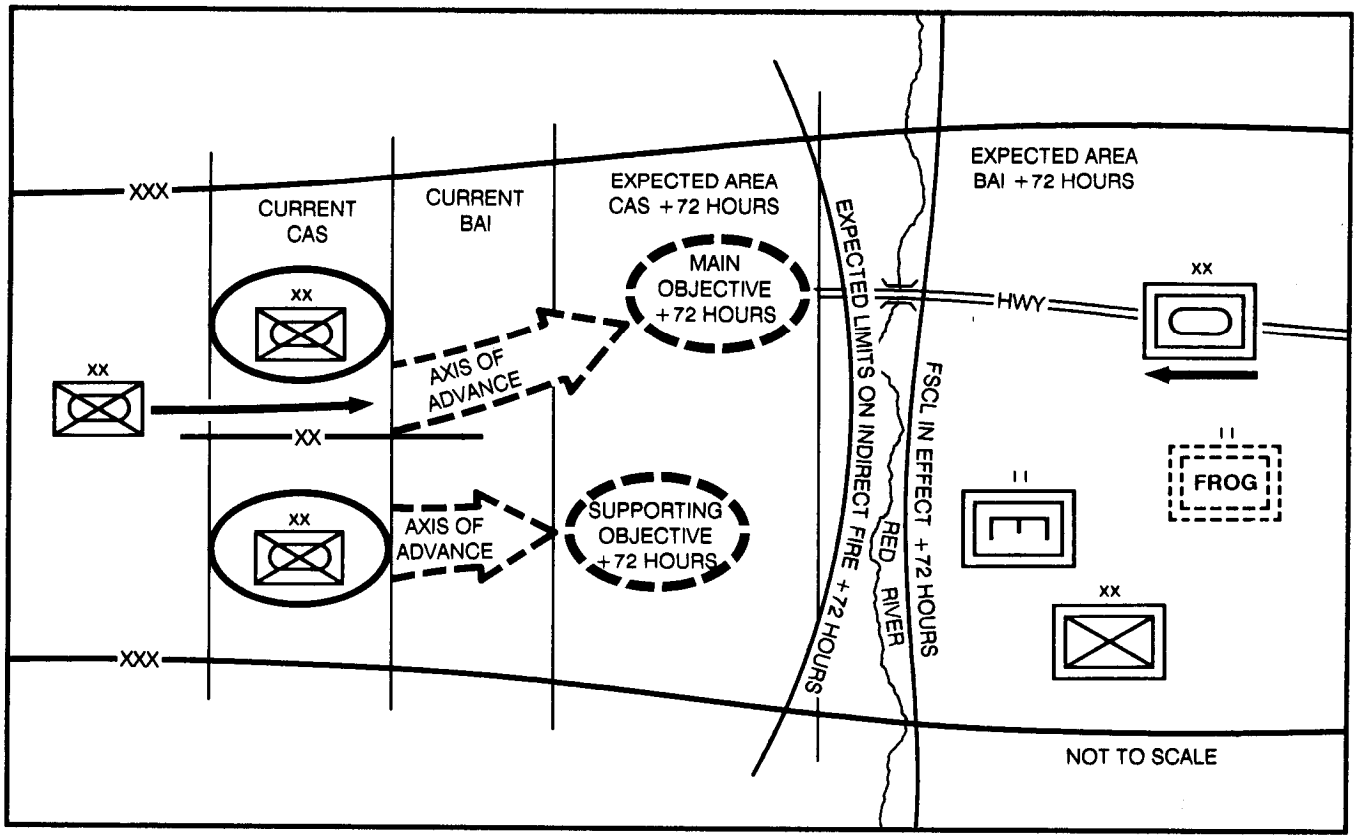

Air Tasking Order Planning and Coordination Process

The ATO is the means for implementing TACAIR support. It tasks assigned and attached fighter wings to do specific missions and gives enough detail that mission aircrews can plan and execute those missions. The ATO is published to allow enough time for air forces and supporting elements to plan their aircraft, aircrew, support, and mission requirements. The TACC issues the ATO, which is valid for a specified effective period, usually 24 hours. While the ATO itself covers a specific period, the ATO planning process is continuous. At any given time, the TACC and BCE will be jointly working three or more ATOs – executing the current ATO, planning the ATO for tomorrow, and forecasting and coordinating for the ATO for the following day.

The graphic below presents a snapshot of a single ATO planning cycle. It is important to note that coordination and information flow are continuous. The actions described are those events that occur during the planning and coordination process. Theater-specific procedures dictate the actual time these events take place.

AIR TASKING ORDER PLANNING CYCLE

TIME FRAME	ACTION
72+ hours	JFC issues his concept strategy and objectives. Tentative apportionment of TACAIR support is established. BAI forecast is sent to corps from TACC. Corps forwards the priority and weight of effort for subordinate units to BCE. FSCOORD and G3 update estimates or plans based on forecast BAI support. Air Force and Army intelligence assets identify targets for TACAIR attack.
48 hours	TACC identifies forecast percentages or priority for BAI and CAS.
36 hours	JFC approves air apportionment plan. He modifies the plan as necessary on a continuous basis and not on a set time schedule.
36 to 30 hours	Corps confirms priorities and distribution of CAS, to include JAAT missions. TACC allocates sorties to match apportionment and forwards that information to corps.
30 hours	Corps gives the TACC AI nominations, an updated BAI target list, and requests for poststrike analysis.
24 hours	Divisions nominate BAI targets to corps. Corps gives TACC updated AI and BAI targets, including alternate targets.
18 hours	TACC publishes the ATO. Responsibility for ATO passes from Army and Air Force planners to executing air wings.
ATO effective period	Air wings execute the ATO. Preplanned CAS is launched as planned. Immediate CAS awaits attack requirements.

Immediate Close Air Support

Certain amounts of allocated CAS can be retained by corps or allocated in priority to division for immediate requests. Immediate CAS can respond to contingencies that develop during the course of division battles. Also, CAS can include spontaneous JAAT operations.

IMMEDIATE CAS REQUEST CHANNELS

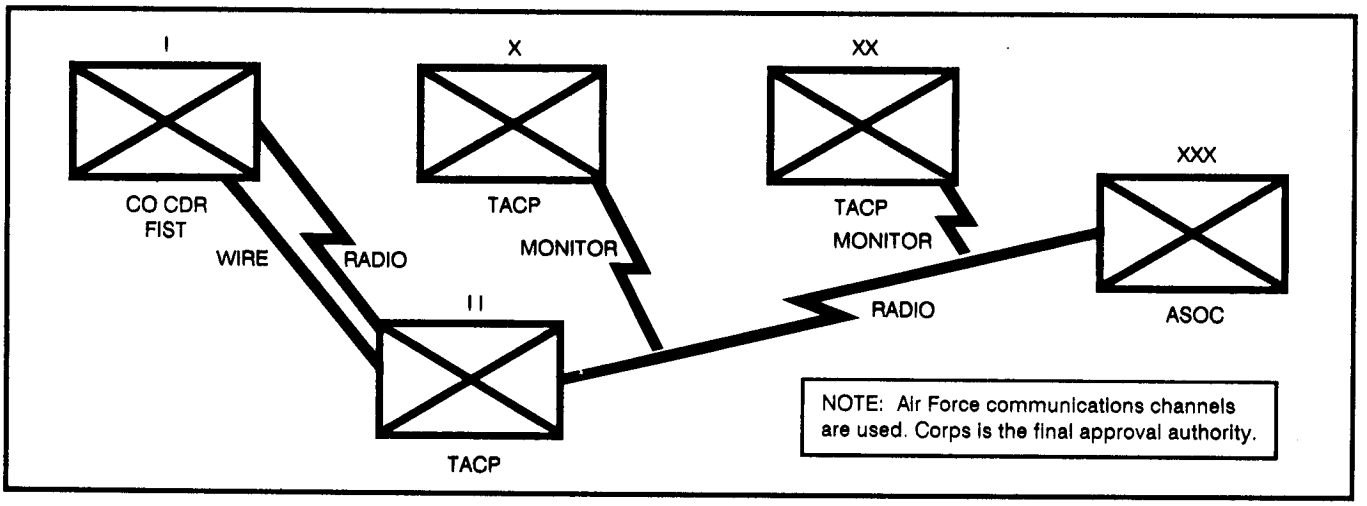

PREPLANNED CAS REQUEST CHANNELS

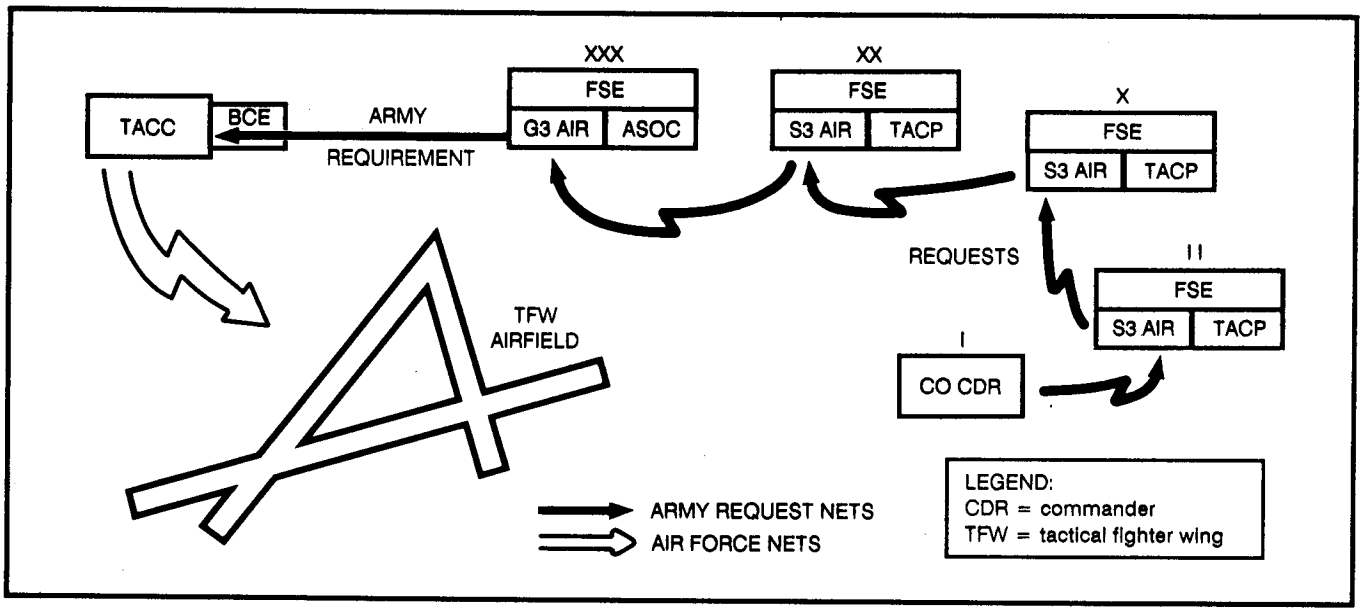

Immediate CAS is initiated at any level. The request is transferred to the Air Force request net by the first available TACP and sent to the ASOC. If the CAS request is part of a JAAT operation, it should be so identified in the remarks block of the immediate request. Once the request for immediate CAS is received at the ASOC, the CAS section of the ASOC waits for corps tactical CP approval of the mission and prepares to transmit the call directly to the servicing air squadron. The usual waiting period at the ASOC is 10 minutes. This time is used for intermediate Army levels to acknowledge the request and to intercede if necessary. Factors for Army and TACP consideration at intermediate levels are as follows:

- What is the relative priority (of the requesting unit) for immediate CAS?
- Can the target be attacked and adequately serviced by use of Army assets?
- Is the request part of a JAAT operation?

After acknowledging the immediate CAS request, silence on the part of intermediate Army levels indicates approval of the request. At the ASOC, approval must be obtained by the G3 air, FSCOORD, or other representative designated by the commander. Once this approval is gained, and if an immediate CAS sortie has already been allocated, the request becomes an Air Force requirement.

Usually, the CAS fighter is scrambled at the wing or squadron airstrip. If necessary, a sortie already aloft can be diverted to service the CAS requirement. In either case, the aircraft is usually on station and ready for control onto the target area within 30 minutes. CAS missions require positive strike control. The Air Force ALO or enlisted terminal attack controller (ETAC) at the unit normally provides this control. In their absence, the ANGLICO FAC, an aerial fire support observer, or the company FSO is also qualified for emergency control of the CAS attack.

Control of Close Air Support

Direct Control

Direct control of CAS target attack is the preferred method for either immediate or planned requests. The forward air controller can identify friendly positions and observe the target, target marks (if used), and attacking CAS aircraft. The FAC may clear or abort the attack on the basis of what he actually sees. This control is achieved primarily by radio communications. Aircraft equipped with frequency modulated (FM) radios are the Air Force A-7, A-10, A-37, and F-16 and the US Marine Corps A-4, F/A-18, and AV-8 A/B Harrier. Once the decision has been made to attack a target with air assets, the ALO or the FSO prepares final attack information and transmits the data to the final controller. After the final controller makes initial radio contact with the flight leader, he asks the flight leader to transmit the lineup information as-follows:

- Mission number.
- Aircraft call sign.
- Type and number of aircraft.
- Ordnance.
- Time on station.

NOTE: The lineup Information received may be different than that received initially from the ALO, but it will reflect actual air assets allocated for the mission.

Indirect Control

Indirect control is used when the FAC cannot directly observe the target area during weapons employment.

The FAC may be in contact with someone who can directly observe the target area. He may then issue clearance or abort the attacking CAS aircraft on the basis of information from the observer.

If the FAC cannot maintain contact with someone who can observe the target area, he may establish procedures with the ground commander and the attacking CAS flight leader to allow weapons employment. This form of control is used only when authorized by the ground commander. Normally, clearance is issued when aircraft are departing the initial point (IP) or shortly thereafter.

Control Measures

Following are the three control measures for CAS missions with which the final controller is concerned:

- The **contact point** (CP) is the point at which the aircraft makes initial radio contact with the final controller.
- The **initial point** (IP) is the point from which the aircraft starts the timed run toward the pull-up point (PUP).
- The **pull-up point** is the point at which an aircraft at low level begins a climb to identify the target and to gain altitude for the attack on the target.

Target Marking

The preferred method of marking a target is by use of a laser if the available aircraft has an airborne, passive laser tracker (Pave Penny). If Pave Penny is used, the final controller must have the same laser pulse repetition frequency (PRF) code as the aircraft. To make the Air Force four-digit code match the laser designator three-digit code, drop the first digit.

CLOSE AIR SUPPORT CONTROL MEASURES

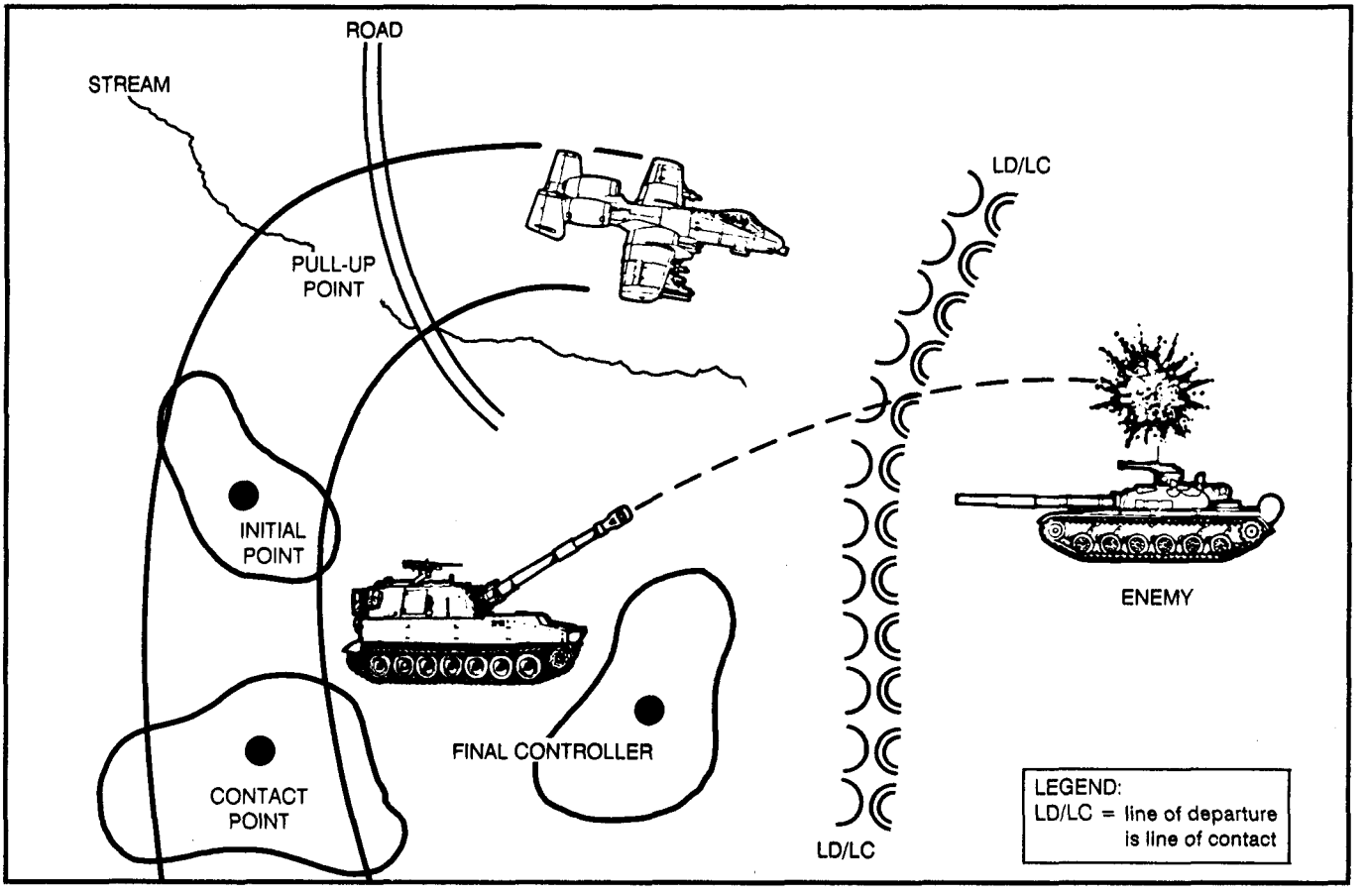

The PRF code is given in the mission brief. The final controller designates the target at the command of the pilot or as the aircraft approaches the apex of the PUP maneuver, whichever occurs first. He continues designating until the pilot has identified the target or 20 seconds has elapsed, whichever occurs first. The call **LASER ON** is given to the pilot at the start of designation.

The alternate method of marking a target for a CAS mission is with artillery smoke, artillery and/or mortar white phosphorus (WP), or ground-burst illumination. The marking round should impact about 10 seconds before the aircraft reaches the time on target (TOT) or time to target. To have the round impact at the appropriate time, the final controller passes the time on target (for example, **1215)** or the time to target **(2 + 00 . . . .MARK)** to the fire direction center (FDC). The FDC then computes the proper time to fire the marking round to allow for time of flight (TOF) so the round will impact 10 seconds before the bombs impact on the target. A good back-off time must be sent to the FDC and to the aircraft from the final controller.

Mission Control

The final controller's control of the mission begins when the flight leader makes initial contact at the CP and the final controller has the flight leader's lineup information. The final controller then verifies that the flight leader has the attack information. If he does not, the final controller transmits the mission brief by using the following format and sequence:

- Initial point.
- Heading (in degrees magnetic) (right or left).

SAMPLE MISSION BRIEF

The mission brief is sent by use of short burst transmissions as shown below. Only the pertinent information is transmitted. In this example, hazards and weather are omitted. The controller pauses after transmission of each piece of information to allow the flight leader to copy as necessary.

FINAL CONTROLLER	FLIGHT LEADER
HAMMER 11 THIS IS K12, CAN YOU COPY MISSION BRIEF?	
	ROGER.
G **305, RIGHT** **16** **350** **5 TANKS** **WP** **1000 SOUTHEAST** **ZSU-23-4, 2 KILOMETERS NORTHWEST**	
TIME TO TARGET 3 PLUS 00 ....MARK	**ROGER.** (ROGER indicates he has the brief and the time mark.)

If the flight leader does not receive a clear, complete transmission, he requests a readback.

FINAL CONTROLLER	FLIGHT LEADER
	HEADING WAS?
305, RIGHT	
	ROGER.

- Distance (in nautical miles).
- Target elevation (in feet, in relation to mean sea level).
- Mark (type) (color) (laser PRF code).
- Friendlies (location) (danger close).
- Threat (type and location).
- Hazards.
- Weather.
- Time to target **([minutes plus seconds] . . . .MARK).**

The flight leader reports when departing the IP. The final controller then orients the flight leader to the target at the apex of his pull-up. He uses the clock method and relays direction and distance from the mark to the target. Direction is stated as one of the eight cardinal directions, and distance is stated in meters. Once the final controller is certain the flight leader has identified the target correctly and the aircraft is pointed at the target, he clears the aircraft to strike the target *(cleared hot)*. The final controller should be prepared to call off the attack (abort) anytime before actual ordnance delivery if the aircraft starts to attack the wrong target or to have the aircraft reattack the target if more ordnance is required. Under certain circumstances, the aircraft may be *cleared hot* at the IP.

Procedural Control – A Technique

Positive control of a CAS mission may not be possible under some tactical conditions, or it may not be necessary because the target is prominent and well away from friendly troops. In such cases, a technique called procedural control may be used to attack a lucrative CAS target. In this technique, procedures are determined and agreed to between the USAF and the ground commander by prearrangement. The maneuver commander, G3 air, FSCOORD, ALO, and other members of the FS cell generate and coordinate all necessary data for procedure-controlled CAS. These data, once developed and agreed to, are forwarded to the USAF air support control system (TACS) for target attack scheduling. The minimum elements of information necessary for initiating this technique are as follows:

- Target location – grid coordinates or specific terrain boundaries (box or circle).
- Code name designation for the target (for quick reference and identification).
- Nature of target and desired ordnance or effects on target.
- Date-time frame within which procedure-controlled CAS may or should be delivered.
- Emergency abort signal or codes.

Air Force Tactical Air Reconnaissance

Air Force tactical air reconnaissance (TAR) is available for use by Army intelligence and targeting agencies. TAR is ideal for target detection and surveillance and for intelligence gathering in areas that Army assets cannot adequately range or cover.

The tactical air force usually is configured with an air reconnaissance squadron. This squadron could be tasked to execute weather, visual, imagery, or electronic reconnaissance. The RF4C is the Air Force tactical reconnaissance platform. It is a two-seat, twin-jet aircraft capable of all-weather, high-low, day-night reconnaissance. A visual-type mission might include weather reporting; but more often, it is target confirmation based on what the crew sees. Visual missions are least precise but are quick in that there is no delay for processing data. An in-flight report must be requested. Imagery missions can provide precise target information, depending on sensor resolution and weather. Optical sensors include framing and panoramic cameras, nonoptical sensors such as infrared (IR) side-looking radar (SLR). The tactical electronic reconnaissance

(TEREC) RF4C can collect target signal emissions and down-link such information to a TEREC remote terminal (TRT) for further processing.

Requesting Tactical Air Reconnaissance

The TAR requests can be either preplanned or immediate. The considerations and procedures for requesting TAR are the same as for requesting fighter TACAIR, except that Army intelligence communications channels are used in forwarding preplanned TAR requests to the BCE. Immediate requests for TAR are transmitted by the TACP of the initiating Army CP directly to the corps ASOC.

The corps G2 who requires TAR coordinates with the reconnaissance liaison officer of the TACP. At division and below, the ALO is the Air Force liaison for TAR. The following key questions are considered before tasking a TAR sortie:

- Can the information be obtained by using Army assets?
- Is the information required already available in the Air Force intelligence data base?

DD Form 1975 (Joint Tactical Air Reconnaissance/Surveillance Request) or US message text format/air support request is used to forward and process both preplanned and immediate requests for TAR.

Reports obtained from TAR sorties range from in-flight reports with immediate but uncorrelated information to detailed analyses which produce valid intelligence data.

- The **in-flight report** (INFLIGHTREP) is generated by the flight crew while the aircraft is over or near the target area. It is what the crew sees. Information may be sketchy, but it is the quickest method by which to get information. The INFLIGHTREP is used to report perishable information.
- The **reconnaissance exploitation report** (RECCEXREP) is sent via teletype. It comes from the first, rapid review of imagery and crew debrief. It is sent out as soon as possible (ASAP) but not later than (NLT) 45 minutes after the aircraft lands.
- The **initial programmed interpretation report** (IPIR) is a teletype report with a second look at imagery. It is a more complete report and contains more analysis. The IPIR is sent NLT 4 hours after the aircraft lands.
- The **supplemental programmed interpretation report** (SUPIR) is a teletype report on all significant targets covered by the mission. It may require up to 24 hours for dissemination.

Requesting Electronic Warfare Support

The Air Force has air platforms for the purpose of electronic combat (EC) with a primary mission of suppressing the enemy's integrated air defense structure. Nonlethal suppression could include the EF1ll Raven as a radar jammer and the EC 130H Compass Call as communications jammer while the F4G Wild Weasel and other attack aircraft (F4E or F16s with air-to-ground weapons) provide lethal SEAD. Normally, such EC support is requested by the corps through Army channels to the BCE at the TACC as a preplanned mission. Such a request might be part of a SEAD requirement to support an Army air assault operation near or across the FLOT. Also, the Compass Call communications jammer could be requested to disrupt enemy C3 voice nets in conjunction with a corps or subordinate unit operation. Such requests normally are preplanned; however, in emergency conditions, an immediate request

could be intiated via the ait request net to the ASOC. EC and EW operations must be closely coordinated with electronic warfare staff officer (EWSO) agencies to prevent fratricide to friendly C^3 or communications nets. However, such use of nonlethal weapons acts as a combat multiplier to fire support plans.

Amphibious Operations

An amphibious operation is an attack launched from the sea by naval and landing forces embarked in ships or other craft for the purpose of landing on a hostile shore. Normally, a naval officer is the commander of the amphibious task force (CATF). Troop components, ground and air, are called the landing force and are commanded by the commander landing force (CLF). The CATF exercises the degree of authority over the entire force that is necessary to ensure success. Subject to this overall authority, the CLF is responsible for conducting operations ashore. Planning and execution of the landing and assault are primarily his concern. An amphibious operation is conducted in five phases: planning, embarkation, rehearsal, movement, and assault.

Initially, the joint amphibious task force (JATF) commander is responsible for planning the use of all air support and indirect fires. He ensures that coordinated naval gunfire and air support plans are prepared for all phases of the operation. He also establishes an amphibious task force supporting arms coordination center (SACC). It plans and coordinates fires for the task force during the planning and execution of the operation. The CLF determines landing force needs for air, naval gunfire, field artillery, and mortars and prepares the fire support plan.

Coordination of Naval Gunfire

Navy surface vessels that mount guns can be used to support Army ground forces. The joint force commander (JFC) decides on the use of naval gunfire to support ground operations. Fire support planners must be aware of the employment considerations and procedures peculiar to naval gunfire in support of Army ground forces.

Missions

The JFC gives an individual naval gunfire ship the mission to support a ground force by assigning either a DS or a GS mission.

- Direct support makes ship fires responsive to the needs of a battalion- or regiment-size ground force. Destroyers and frigates equipped with 5-inch guns usually are given this mission.
- General support makes ship fires responsive to the needs of a brigade-size or larger ground force. Cruisers and battleships equipped with 5-inch and/or 16-inch guns usually are given this mission.

Considerations

A naval gunfire ship fulfills its support mission much as do other indirect-fire systems. There are certain special considerations that fire support planners must keep in mind.

The first priority of the ship is self-preservation. The ship will interrupt its support mission if its survival is threatened. This includes ammunition expenditure. Since naval guns are, in addition to shore bombardment, used for ship or fleet defense, the ship will keep a large percentage of its magazine capacity for this contingency.

Ships are positioned to provide support by assignment of a fire support station (FSS) or a fire support area (FSA).

- A **fire Support station** is a specific point on the water where the ship is required to maintain its position until the positioning authority, usually the JATF, allows it to

move. An FSS is preferred from a fire support standpoint because the support ship is in a stable position and can provide more continuous and more accurate indirect fires.

- A **fire support area** is an area within the amphibious objective area (AOA) where the support ship may steam at its own discretion. The FSA is preferred from a survivability standpoint. However, the delivery of indirect fires may be affected because of the changing gun-target line and less precise self-location for firing computations.

Procedures

During amphibious phases of a joint operation, a naval task force provides interface with the Army force senior FS cell through the ship-based SACC. The SACC is responsible for coordinating all fires during the assault. To facilitate the coordination of fires in support of the landing force assault to shore, the SACC staff is augmented with personnel and equipment from the senior landing force fire support facility. For example, if the ground force is a division, the main FS cell would be collocated with the SACC. Normal field artillery command/fire direction (CF) or fire (F) nets (FM) or the landing force fire support coordination net (high frequency [HF]) may be used for coordination. To minimize dependence on ship-to-shore communications, landing force units coordinate laterally whenever possible and when fires clearance is required from only one other landing force unit. When ashore and prepared to do so, the landing force FS cell assumes responsibility for fire support coordination. The change in responsibility for fire support coordination is based on the capability to coordinate all ground and air fires and is contingent on the decision of the CATF. Often, responsibility for controlling naval gunfire and artillery is phased ashore before responsibility for controlling air fires.

Requesting Naval Gunfire Support

Army personnel may request and conduct fire support missions using naval gunfire even in the absence of ANGLICO personnel. The NGF communications interface is as follows:

- Net: Naval gunfire ground spot net.
- Frequency: 2-30 MHz HF.
- Compatible equipment:
  - USMC – PRC-104, GRC-193, MRC-138.
  - Army – GRC-106, GRC-193.
  - Air Force–PRC-104, MRC-107/108, GRC-206.

Naval Air

Naval air support may be provided to Army ground forces when available Navy aircraft exceed anticipated Navy requirements. The primary missions of Navy aircraft are fleet air defense and offensive attack.

Navy aircraft are capable of all Air Force aircraft missions, to include BAI, CAS, electronic warfare, and TAR. When Navy aircraft are designated to support Army ground forces, those aircraft are placed in the general aircraft sortie pool for tasking by the controlling TACC; and they conduct missions in the same manner as Air Force aircraft.

The Navy tactical air control system is very similar to the TACS and AAGS located ashore.

When Navy air supports Army ground operations, communications and control of Navy aircraft are the same as for Air Force aircraft. BAI sorties are tasked by the TACC. CAS sorties require the same positive control as Air Force CAS during the actual strike. As with Air Force CAS, the Air Force FAC, the

ANGLICO, or the Army fire support team (FIST) can provide this strike control.

Army ground forces must be operating in an AOA or receiving their primary TACAIR support from the Navy (the naval air commander is the air component commander). In this case, the BCE will deploy to the CATF's TACC to perform the same full functional area interface and synchronization as it does with the Air Force TACC.

USMC Fire Support Assets

United States Marine Corps (USMC) forces normally are depoloyed as a Marine air-ground task force (MAGTF). The MAGTF is organized as a complete fighting organization. It is given artillery, TACFIRE and/or helicopters, and logistics support from attached USMC support units from the Fleet Marine Force (FMF). The fire support assets of the MAGTF are controlled by the MAGTF commander and are used solely to support the Marine ground operation. Employment of separate MAGTF elements such as the ground maneuver element by another command is doctrinally unsound. The Joint Chiefs of Staff (JCS) guidance and policy on separate employment is in JCS Pub 12. Nonetheless, should a situation arise in which a Marine maneuver force is employed separately, the controlling commander, Army or Marine, must allocate fire support asets to the force.

Indirect fires are coordinated between the Army and the USMC by the exchange of liaison officers between the Marine artillery unit and the senior force FSE. The USMC artillery LO coordinates USMC indirect surface fires with Army indirect surface fires. He also provides an FM communications interface for the exchange of target information and requests for additional fires by either force artillery.

The JFC has the authority to assign USMC artillery units a tactical mission to support an Army ground unit or to reinforce Army artillery. The USMC artillery unit provides an LO to the Army ground unit CP or to the Army artillery unit, as required. All aspects of fire support doctrine apply and are exercised by USMC artillery units. One exception is that the USMC artillery unit cannot provide FSOs or forward observers to supported Army maneuver units. Army fire support personnel attached to the Army maneuver unit provide these fire support functions; the Marine artillery firing unit, linked by FM communications, performs firing operations.

Marine air can perform BAI, CAS, EW, and TAR. As a part of the MAGTF, Marine air is used to support Marine ground operations in any scenario. The MAGTF commander gives the JFC available Marine air sorties in excess of USMC requirements. The JFC also has the authority to apportion Marine air for support of joint operations. In either case, Marine air sorties available for support of Army operations are controlled by the air component TACC, usually the Air Force TACC. Marine air conducting CAS is controlled during the CAS strike in the same manner as are other CAS aircraft.

Army forces may be operating jointly with USMC forces in an AOA while elements of the Marine air command and control system (MACCS) (division air support center [DASC], tactical air operations center [TAOC], or TACC) are providing and controlling TACAIR support to Army forces in the AOA. Then the BCE will deploy to the Marine TACC or to other MACCS elements to perform the same full functional area interface and synchronization as it does with the Air Force TACC. The DASC will perform those functions normally performed by the ASOC.

Joint Suppression of Enemy Air Defenses

Joint suppression of enemy air defenses (J-SEAD) is that portion of SEAD operations

that requires joint interaction to suppress enemy surface-to-air defenses having an influence on the operational and tactical portion of the AirLand Battle. The goal of J-SEAD is to increase the overall effectiveness of friendly AirLand operations through reduced attrition and improved capabilities of Army and Air Force air resources. Ground and naval forces have primary execution responsibility for J-SEAD to their limits of observed fire from surface weapons. The limit of observed fire is the range to which an airborne or ground-based observer can visually see the point of impact or burst. The fire can be controlled and adjusted on the basis of observation. The greatest indirect-fire suppression capability of ground and naval forces is against those threats that can be engaged by observed fire. SEAD operational procedures are in Appendix B, Section V.

FSCOORD Tasks for J-SEAD

The FSCOORD brings together the *decide-detect-deliver* process to accomplish J-SEAD during corps and division operations. He does this by accomplishing the tasks discussed below.

Ensure that SEAD target queries are conducted for each BAI and planned CAS request. The SEAD targets must be targeted, and the attack of these targets must be synchronized with the planned air strike. The sources for development of SEAD targets in the close battle area are primarily ground observers and Army electronic, imagery, or templating techniques. Deep SEAD targets to be suppressed for BAI attack missions are provided primarily by Air Force TAR flight reports or other aircraft reports available from the BCE intelligence division.

SEAD targets are attacked either as acquired or as part of a scheduled SEAD program. The FSCOORD coordinates the synchronization of SEAD programs with the ALO and the G3 Air.

Ingress and egress routes for aircraft should be an area of the battlefield focused for SEAD targeting. This information is available from the appropriate-level ALO or may be found in the ATO. Often, requests for SEAD targeting will come through the BCE to corps fire support elements. Coordination in this case also must be thorough and responsive to ensure sustained aircraft survivability and support.

Joint Communications Interface

Timely and efficient exchange of information is a key requirement for successful joint operations. Published joint and interservice agreements on operations are commonly accompanied by communications guidelines and responsibilities that facilitate the joint operation. These agreements recognize the importance of passing vital information to the appropriate individual or agency in a manner that is understood in both format and text. The surest form of communications interface is the collocation of coordinating agencies, such as the TACC and BCE. If personal coordination is required but collocation is not possible or desired, the exchange of liaison personnel facilitates personal interface. However. in joint operations, some means of radio-electronic interface among services is required.

TACS-AAGS Communications

Communications facilities over which tactical air support may be requested and directed exist from the frontline company through all echelons of command to the highest Army tactical CP. Communications are required from the lowest-level TACP or FAC up through the ASOC to the TACC.

Communications also are required between the CP and the liaison officers at the fighter, reconnaissance, and airlift bases and the TACC. The following paragraphs describe the communications available to the air-ground system, to include both Army and Air Force systems.

Multichannel Systems

These systems provide the primary theater transmission media. Both Army and Air Force multichannel systems are installed to connect the BCE with the corps ASOC. These systems are used primarily to pass preplanned BAI and CAS nominations from the corps CP to the BCE and to pass intelligence information between the corps CP FS cell, the FSCOORD or G2, and the BCE intelligence and fusion sections. Other routine communications between the BCE and the corps ASOC are passed over either multichannel system. Where secure facsimile very-high-frequency (VHF) radio communication is available, the TACC plans division is connected with the ASOC.

Air-Ground Communications

All elements of the TACS are provided with an air-to-ground communications capability. Communications modes available in these air-ground nets are ultrahigh frequency (UHF), very high frequency, and high frequency/single sideband (HF/SSB). TACPs may use UHF or VHF/FM for directing air strikes. The ASOC air-ground communications provide a partial control capability and allow monitoring of TACP-aircraft communications for immediate report of strike results and in-flight reconnaissance reports. The forward air control post (FACP) also has UHF and VHF/FM for controlling the aircraft from the air base to and from the target. Spot reports and in-flight reconnaissance reports are passed to the TACC by long-range HF/SSB and by UHF. Tactical airlift movements and Army aircraft flights within the area have UHF and VHF air-ground communications with control agencies.

Air Force Air Request Net

The basic communications net in the tactical air support subsystem of the TACS is the Air Force air request net. The Air Force is responsible for providing, maintaining, and operating this net. The net provides the means for rapid transmission of immediate requests for tactical air support from the TACPs directly to the ASOC. A separate air request net, terminating at the ASOC, is provided for each corps supported. The primary communications means used is HF/SSB radio. The TACPs are also equipped with manpacked HF/SSB and UHF/FM radios.

Tactical Air Direction Net

This net is used by the TACP, ASOC, and airborne forward air controller (AFAC) for directing aircraft on tactical air support missions. The ground equipment used in this net consists of VHF and UHF radios that are either mounted in vehicles or manpacked.

AIR FORCE AIR REQUEST NET

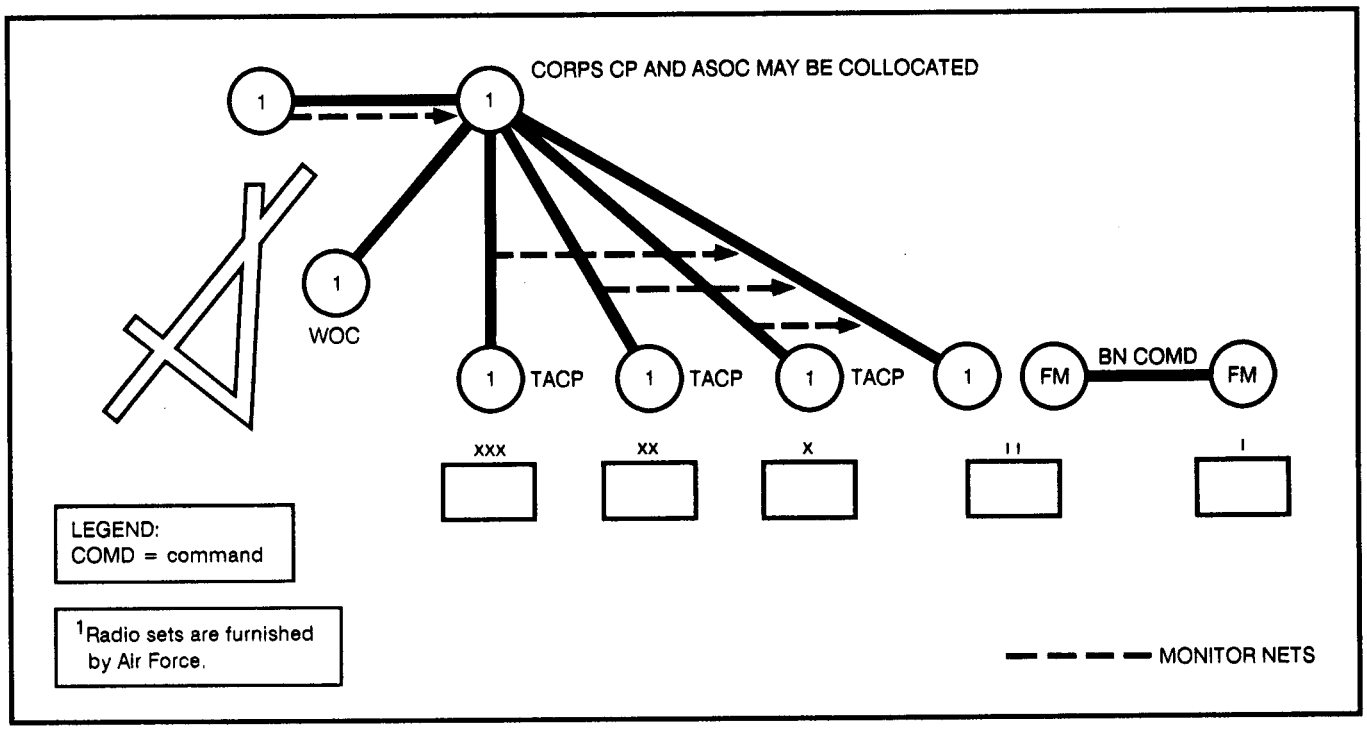

Tactical Air Control Net

This net provides direct communications between the TACC and the control and reporting center (CRC), Army aviation agencies, and Army air defense agencies within the combat area. Its purpose is to provide communications for monitoring flights, air traffic control, and air defense.

Communications for a Preplanned Mission

Communications nets for preplanned missions are required from the frontline company to the TACC. No special net is provided for this purpose at any echelon. After approval by corps, the request is forwarded to the tactical air control center as a support requirement. The TACC orders the mission flown by one of its tactical fighter units. Existing facilities are used to request preplanned missions as shown in the illustration below.

Communications for an Immediate Mission

The frontline company uses its fire request net or its battalion command (cored) net to request an immediate CAS mission. Upon approval of the request by the battalion, the Air Force TACP forwards the request directly to the ASOC at corps on the Air Force air request net (SSB). The TACP intermediate headquarters monitors this net and acknowledges all requests.

PREPLANNED MISSION REQUEST NETS

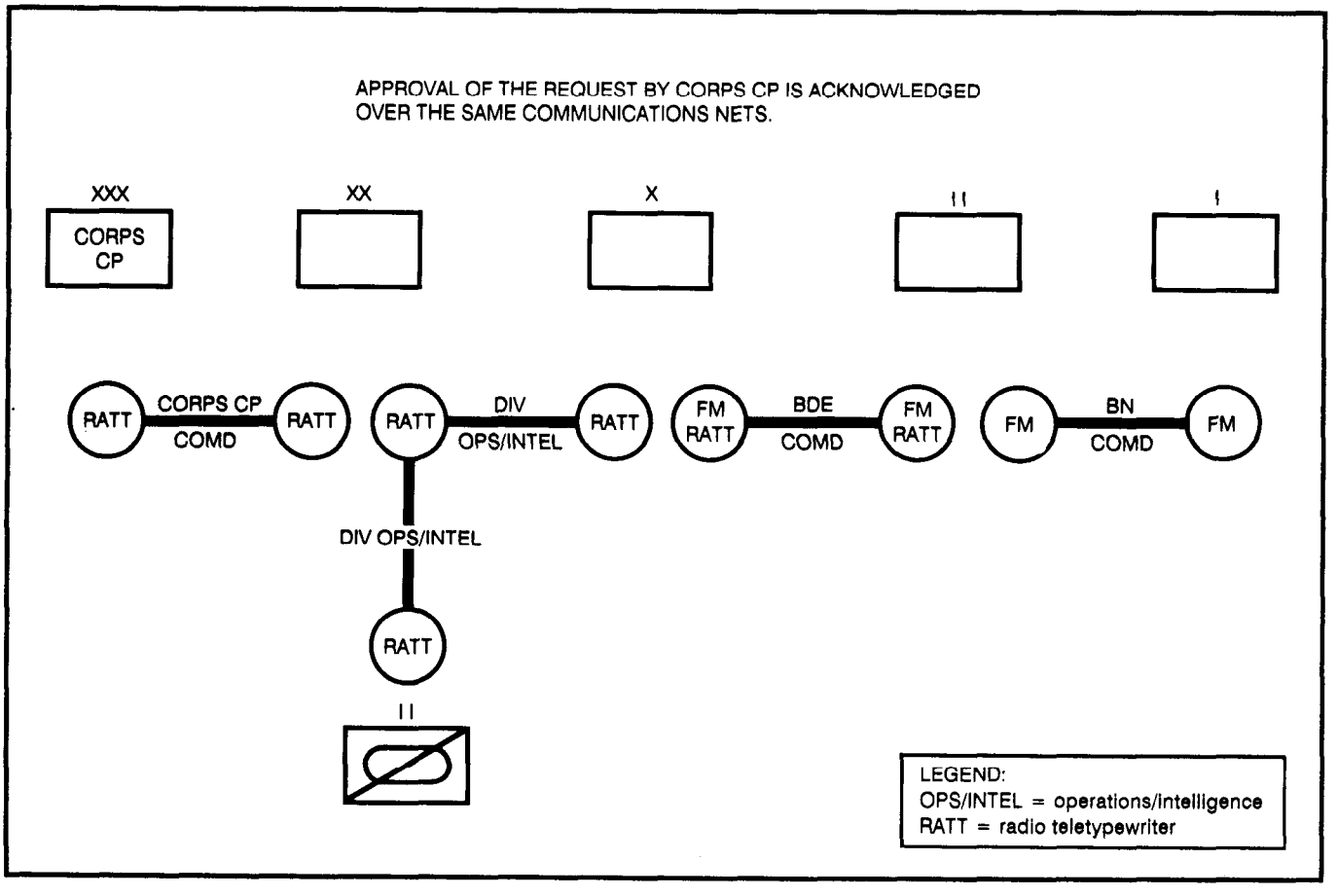

Ground Liaison Officer Net (RATT)

The highest Army command echelon must furnish a ground liaison officer to each tactical fighter base. The duties of these officers are to brief the pilots on the missions and to debrief them on return from the missions. The GLO net (radio teletypewriter [RATT]) links the G3 air at the land component command post with the ground liaison officers at the fighter bases. This net is used to give the GLOs information to brief the pilots and as a means for sending debriefing reports to the Army command post.

Military Intelligence Battalion (Imagery Interpretations Operations Net (SSB RATT)

The military intelligence battalion (MIB) provides an air reconnaissance liaison officer and an MIB detachment for each tactical air reconnaissance wing and squadron. The ARLO is responsible for briefing and debriefing the Air Force pilots on missions flown in support of the Army and for passing the debriefing reports to the MIB detachment headquarters, the corps and higher army G2 air sections (when appropriate), and the joint task force (JTF) headquarters.

The MIB detachment includes an imagery interpretation section and a reproduction section. The Air Force processes the Army-requested photographs and passes a duplicated negative and two prints of each photograph to this detachment. The imagery interpretation section makes a detailed analysis of the photographs and prepares an imagery report to be passed to the requester. The reproduction section produces the required number of prints and passes them to the battalion headquarters for delivery to corps and division levels.

The MIB operates a RATT communications net (see the corps communications summary below). This net includes the battalion headquarters, the ARLOs, the corps G2 air, and JTF headquarters. The debriefing and imagery reports are transmitted over this net to the corps G2 air for retransmission to the requester.

GROUND LIAISON OFFICER NET

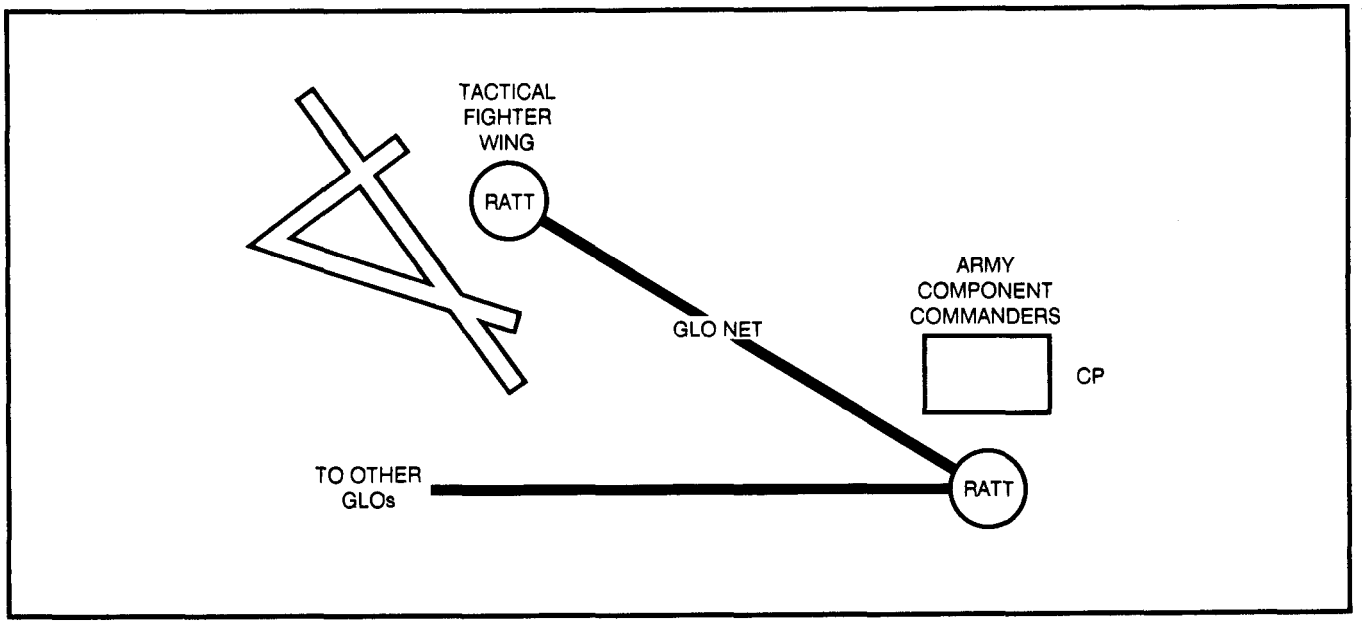

NOTE: When an operation is conducted by a corps without army command headquarters the corps requires the same nets normally required by a higher army command echelon.

US Message Text Format

JCS Pub 25 explains US message text format and should be consulted for a complete understanding of this system.

TACS-AAGS Automation

The ongoing Army-USAF initiative to automate the BCE will soon provide a near-real-time data link between fire support and intelligence agencies in the corps CP, to the BCE at the TACC, and all the way down to the GLOs and ARLOs at USAF wing operations centers (WOCs).

CORPS COMMUNICATIONS SUMMARY

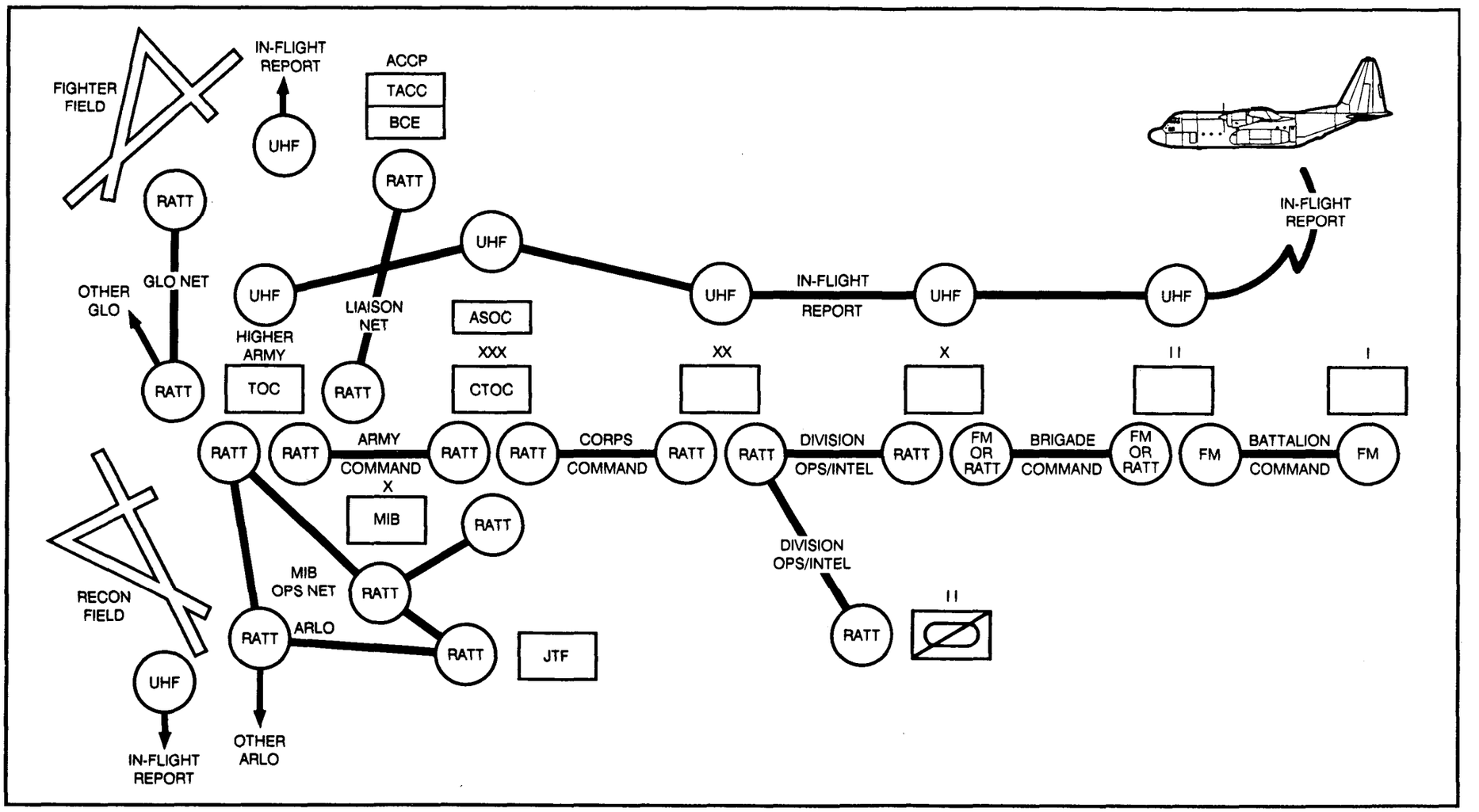

CHAPTER 4

OFFENSIVE OPERATIONS

Fire support for offensive operations can be described in terms of an offensive framework presented in FM 100-15. This framework shows corps and divisions using five complementary elements in fighting their offensive battles:

- *A main attack with supporting attacks as required.*
- *Reserve operations in support of the attack.*
- *Reconnaissance and security operations forward and to the flanks and rear of main and supporting attacks.*
- *A continuous deep operation in vital parts of the zone of attack.*
- *Rear area operations necessary to maintain offensive momentum.*

Section I. OFFENSIVE FIRE SUPPORT

Description

The commander must provide responsive fire support (from available air, ground, and sea resources) that protects and ensures freedom of maneuver to forces in contact with the enemy in deep, close, and rear operations. Each of the five complementary elements of the offensive framework must be considered when determining fire support requirements.

Basic Tasks

Corps and division commanders normally ensure adequate fire support for offensive operations through a process of allocation and retention of specific fire support assets. The four basic tasks of fire support are as follows:

- Support forces in contact.
- Support all aspects of the battle plan.
- Synchronize fire support.
- Support and sustain fire support.

AIRLAND BATTLE

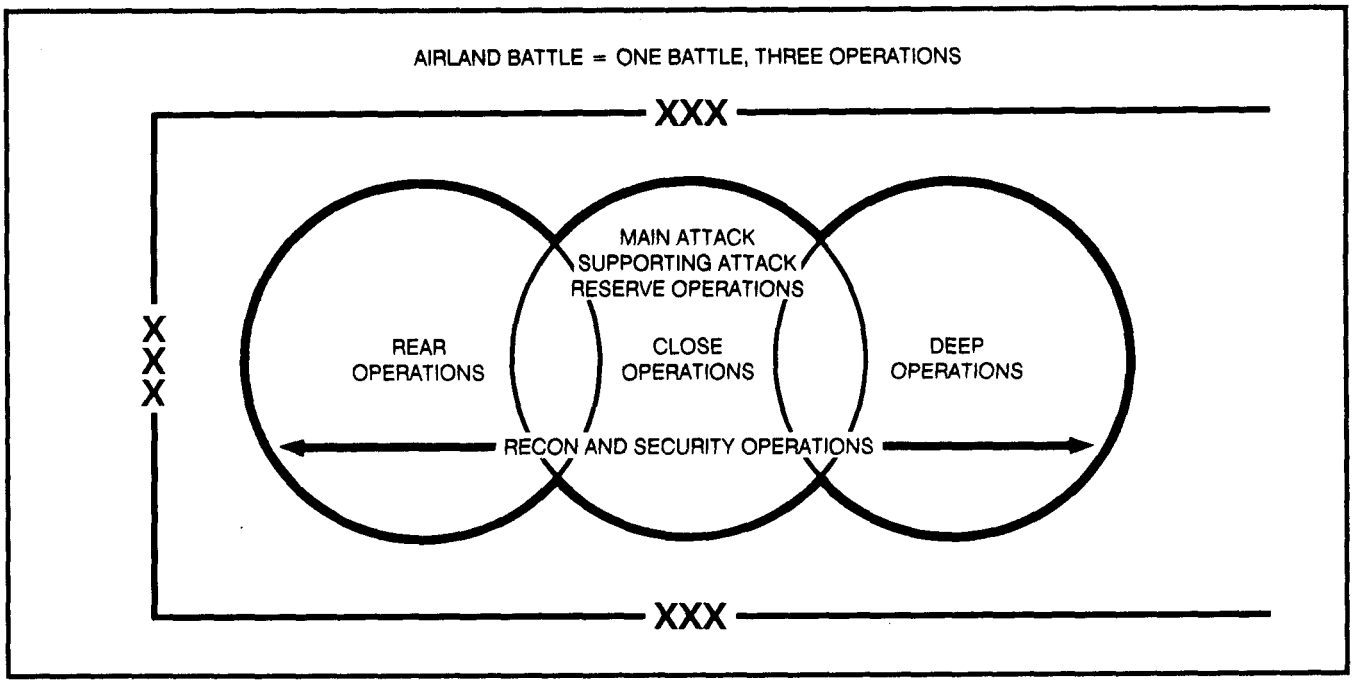

Support Forces in Contact

This task includes the allocation of weapon systems and sorties to subordinate elements, such as division and brigade, which actually engage the enemy. Supporting forces in contact usually means providing support for the close operation.

Support the Battle Plan

Supporting the battle plan means retaining fire support for any possible contingency. Fire support assets for rear operations and deep fires must be identified and marshaled for execution at the right time and place.

Synchronize Fire Support

The synchronization of fire support at corps and division is essentially a command function. The FSCOORD helps the commander integrate all fire support with the appropriate battlefield operating systems (BOSs). These systems include maneuver, command and control, fire support, air defense, intelligence, mobility and survivability, and combat service support.

Support and Sustain

Fire support for offensive operations must be sustained through all phases of an operation. It must survive through all phases of an operation without a degradation of availability.

Attack and Acquisition Systems

Specific fire support attack systems and acquisition systems are allocated through normal practices, such as field artillery organization for combat. Adequate fires are made available to meet the corps and division commanders' close support, counterfire, and interdiction requirements. Other fire support means, such as tactical air, naval gunfire (division and below), and nonlethal (EW) systems, are allocated if available and applicable to the needs of the force commander.

Nuclear Weapons

The allocation of nuclear weapons to support offensive operations is discussed in detail in FM 100-30. The table below summarizes the roles of nuclear weapons in offensive operations.

CORPS OFFENSIVE OPERATIONS

OPERATION	OBJECTIVE	NUCLEAR WEAPONS ROLE	CONSIDERATIONS
Rear	Retain freedom of action.	Protect the force through mitigation techniques.	Conduct vulnerability analysis.
Close	Complete defeat of engaged echelons. Conduct passage of operational reserves.	Create significant gaps for maneuver.	Use in lieu of maneuver. Use along axis of advance.
	Maneuver to achieve operational objectives. Synchronize attack to prevent creating a nuclear target.	Allow small units to accomplish mission of larger unit. Destroy reserve and counterattack force.	Use lower yields on closer targets. Consider minimum safe distances (MSDs) and least separation distances (LSDs) for attacking forces. Remember, normal risk criteria is negligible risk to unwarned exposed soldiers.
Deep	Position to support campaign plan of echelons above corps (EAC). Deny enemy ability to concentrate combat power to interfere. Retain initiative instead of ceding it to the enemy. Control rate at which the enemy can introduce forces into the close battle. Deny the enemy his freedom of action. Create conditions for close operation success.	Create window for future offensive action. Destroy and disrupt the enemy's capability to attack close or rear units and facilities. Prevent enemy reconstitution, counterattack, or withdrawal. Isolate the close operations area. Destroy enemy reinforcements.	Position in depth. Attack early. Use higher yields. Consider using latent lethality to defeat criteria (get larger radius of damage).

Section II. MAIN ATTACK WITH SUPPORTING ATTACKS

Roles of Fire Support in the Attack

Close Support

To satisfy the close support needs of the attacking corps and divisions, FSCOORDs consider the fires discussed below.

Preparatory Fires. These are fires that support penetrations of the main defensive belts. They are not necessarily scheduled preparations in the classic sense; rather they are intense, concentrated fires that support an opening for a penetration.

Blocking Fires. Blocking fires isolate the main effort and fix other forces in the main defensive belt for the supporting attacks. Use FASCAM if necessary but be sure minefield locations have been coordinated with and approved by the division engineer and disseminated to all units.

Continuous Suppression. Continuous suppression of direct-fire weapon systems allows maneuver forces to close with the enemy and destroy him with organic direct fire.

Obscuration and Screening Fires. Obscuration and screening fires allow maneuver forces undetected movement.

SEAD Fires. SEAD is critical for all operations. CAS, BAI, and attack helicopter operations in support of combat operations require SEAD fires against the many antiaircraft systems that accompany the Threat's forward elements. Some of this SEAD is appropriate for nonlethal (EW) attack assets that jam air defense radar systems. A critical element in performing SEAD is locating enemy air defense weapons and facilities. Electronic warfare support measures and other target acquisition sources are used for this purpose. SEAD fires may be developed into a program of fires to support friendly air operations, to include CAS, BAI, JAAT operations, and support to air corridors. Smoke also may be used to hide friendly aircraft from ground observers. Airspace coordination areas and phase lines may be used to coordinate a SEAD effort.

Counterfire

Counterfire at corps and division must be aimed against specific enemy fire support functions. By using the IPB and/or TVA process and the *decide-detect-deliver* targeting methodology, we can determine, locate, and attack specific high-value functional targets such as C^3 nodes, target acquisition systems, and key weapon systems. The destruction, neutralization and suppression of these targets yield high payoffs in the following areas:

- Keep the enemy from disrupting our attack formations with a counterpreparation, thus ensuring our freedom of maneuver.
- Prevent the enemy's ability to provide counterfire which would result in degraded friendly fire support.
- Eliminate or reduce the enemy's capability to counterattack by shifting and massing fires.
- Conduct a counterair program directed against the enemy's use of attack helicopters.

Counterfire at corps and division levels need not be limited to field artillery. Artillery cannons, rockets, and missiles will provide the preponderance of counterfire. However, tactical air support, electronic warfare, Army aviation, and naval gunfire, if available, may be used to attack counterfire targets.

Interdiction

The use of interdiction to support the commander's concept of operation and scheme of maneuver must take into account the following:

- Targeting efforts must focus on the enemy's capability to shift resources to defend or reinforce his positions.
- Interdiction will be conducted primarily by the corps. However, the division may contribute interdiction fires, depending on the scale of the attack.
- Interdiction attack assets may include field artillery rockets and missiles and Army aviation and Air Force assets performing air interdiction and battlefield air interdiction.

Allocation

In offensive operations, fire support assets are allocated to weight the main attack. For field artillery, this is done by assigning a preponderance of decentralized tactical missions (direct support and reinforcing) to the main attacking force. The corps commander also can add weight to his main attacking division by attaching corps field artillery elements to the division or by providing reinforcing units to division artillery. Employment of field artillery brigades is discussed in detail in FM 6-20-2. By decentralizing field artillery units, corps and division commanders provide their subordinate maneuver commanders the support they need to gain and retain the initiative of the attack.

Tactical air support adds weight to the main attack when CAS sortie allocation is increased. A continuous flow of preplanned CAS sorties allows the main attack force to respond to contingencies that develop during the course of the division battle as well as retain the initiative.

Allocation of other fire support assets and resources must follow the same decentralized methodology. Based on the factors of METT-T and the commander's concept of the operation, these allocations give subordinate maneuver commanders flexibility and responsive fire support. Decentralized allocation gives the attacker the flexibility to exploit opportunities as they arise.

Positioning and Displacement

Positioning of field artillery assets is determined by the mission assigned to the subordinate field artillery battalions. Artillery retained under corps or div arty control with a mission of general support or general support reinforcing (GSR) is positioned by the commander of the respective force artillery. By positioning artillery in particular sectors and assigning zones of fire, the force artillery commander can lend weight to the main attack, provide additional adequate support, and facilitate future operations. In the offense, artillery is positioned well forward to exploit weapon ranges and to preclude untimely displacement when fires are needed the most.

Corps and division artillery units are positioned well forward in the forward brigade sectors. MLRS units in particular, with their inherent mobility, can be positioned well forward, nearer the FLOT. There they can engage targets that are beyond the range of cannon artillery. Good positions will be at a premium with units actively competing for them. While the field artillery commanders select positions, all positions must be coordinated through the FS cells in whose sectors the proposed positions are located. Ultimate approval rests with the maneuver commander concerned. Units in direct support of brigades and their reinforcing artillery normally have overall priority in positioning.

In the offense, units must conduct timely displacements. Fire support must be

continuous and must not be outpaced by maneuver. Units that are positioned by corps artillery, and even by division artillery, are in real danger of being left behind unless repositioning is frequent and is synchronized to support the forward progress of maneuver elements.

Corps and division tactical CP operations ceils must aggressively seek out the current forward line of troops. They must ensure rapid dissemination to brigade CPs of this vital information lest GS and GSR units be left behind. Survivability moves are less frequent in the offense. This is because moves are focused more on supporting the maneuver force and we have superiority in combat power in the offensive zone.

Fire Support Planning and Coordination

Fundamental to the success of any operation are proper ordering of priorities and an orderly and logical consideration of each factor affecting fire support. Thus, it is essential to the success of offensive operations conducted by corps and divisions to instruct commanders and staff planners on each of the fire support considerations. The fire support considerations of consequence at all echelons for the attack include the following:

- General planning coordination parameters.
- Fire support planning, coordination, and tasks.
- Targeting procedures.
- Intelligence preparation of the battlefield.
- Use of electronic warfare assets.
- Weapon status during the attack.

General Parameters

At the main CPs of corps and division, most of the FS cell actions involve planning the deep battle, coordinating the future and current battles, and allocating resources for current and future battles to the subordinate units. Although these FS cells rarely request fire support for immediate engagement of targets, they must ensure that preplanned TACAIR requests are submitted during the planning process. The brigade and battalion FS cells are much more involved in the execution of the current battle, and most immediate TACAIR requests will be submitted at these levels. They fight within the parameters established by the higher headquarters and with the resources they have been allocated.

PLANNING AND EXECUTION RELATIONSHIP

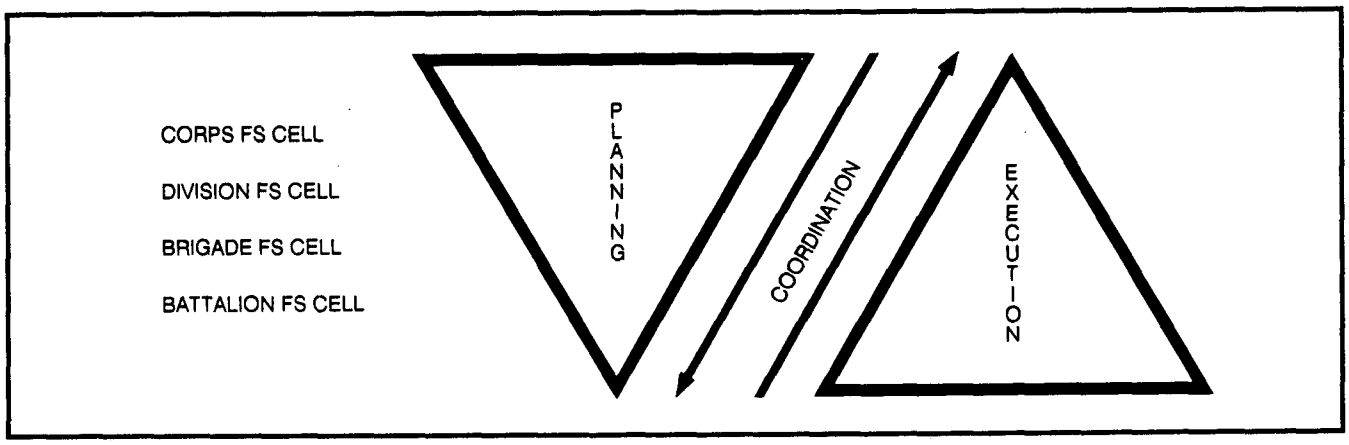

This is not meant to imply that brigade and battalion FS cells need not plan fires in advance of operations. They just don't plan as far into future battles as the cells at corps and division. In fact, the fire support principle of "use the lowest echelon capable of furnishing effective support," as explained in FM 6-20, must always be considered by fire planners. Fire support planning, coordination, and execution should be done at the lowest level possible with the fewest number of elements necessary to accomplish the mission. For example:

- Division coordinated fire lines (CFLs) should be used sparingly and only to open up the division zone to fight the division deep battle. The division FS cell is often too far removed to emplace, cancel, and move CFLs for the close-in operation.
- A corps artillery asset with a GSR mission to a division artillery makes positioning extremely difficult. A preferred method in the offense is to make that unit reinforcing with the necessary restrictions to facilitate future operations.
- SEAD should be planned and fired by the unit using the air support. It is almost impossible to coordinate SEAD fired by divisional DS artillery for CAS flown in support of a brigade or task force operation. It is much easier to use the brigade fire support with division artillery augmenting as necessary.

Planning

Fire support coordinators develop a fire support plan that assists and complements the maneuver plan. The fire support plan provides fires in direct support of committed maneuver elements and in general support of the entire force. It also provides for fire support to the reserve when it is committed. When use of nuclear or chemical weapons has been authorized, the fire support plan assigns such weapons and fires to appropriate executing units.

In planning a preparation, consider the following factors:

- Will the loss of surprise be significant?
- Are there enough significant targets?
- Are there enough fire support assets (weapons and ammunition) to support the preparation?
- Can the enemy recover before the effects can be exploited?
- Can you include flank or follow-on forces?
- Can the effects of nuclear and chemical fires affect the scheme of maneuver?

Other types of planned fires may be substituted for a preparation. Aggressively applied series, groups, and programs of targets can be used to support each echelon of maneuver throughout the attack. These fires are continuously planned to suppress forces on flanks of the penetration, fix enemy forces away from the penetration, and prevent reinforcement by follow-on forces. These fires help block enemy movement of reserves, destroy his command and control facilities, neutralize his artillery, and prevent the escape of retreating elements.

Coordination

For effective fire support coordination in combined operations, there must be an exchange of liaison personnel down to the lowest possible echelon along the common boundary. Personnel not only must be tactically and technically competent but, ideally, also should be proficient in language to facilitate rapid coordination. The fire support coordinators at all levels are responsible to ensure both fire support coordination and mutual assistance of fire support assets.

Targeting

Targeting for the attack follows general procedures detailed in FM 6-20-10. The FS cell targeting decision process is shown in the illustration below. This example emphasizes the targeting methodology of *decide-detect-deliver.* The planning associated with a successful targeting effort requires close interaction between the commander, the intelligence and operations staffs, the fire support officers, and several combat support agencies.

Done properly, the *decide* function provides a clear picture of the priorities applicable to the tasking of target acquisition assets, the selection of an attack means, and the requirement for postattack assessment. Specifically, the *decide* function answers these questions:

- What targets should be acquired and attacked?
- Where will the targets likely be found?
- What acquisition assets are best suited to locate the targets?
- Which attack option applies — maneuver, fire support, electronic warfare, or a combination of these?
- Is damage assessment required and/or possible?

FS CELL TARGETING DECISION PROCESS

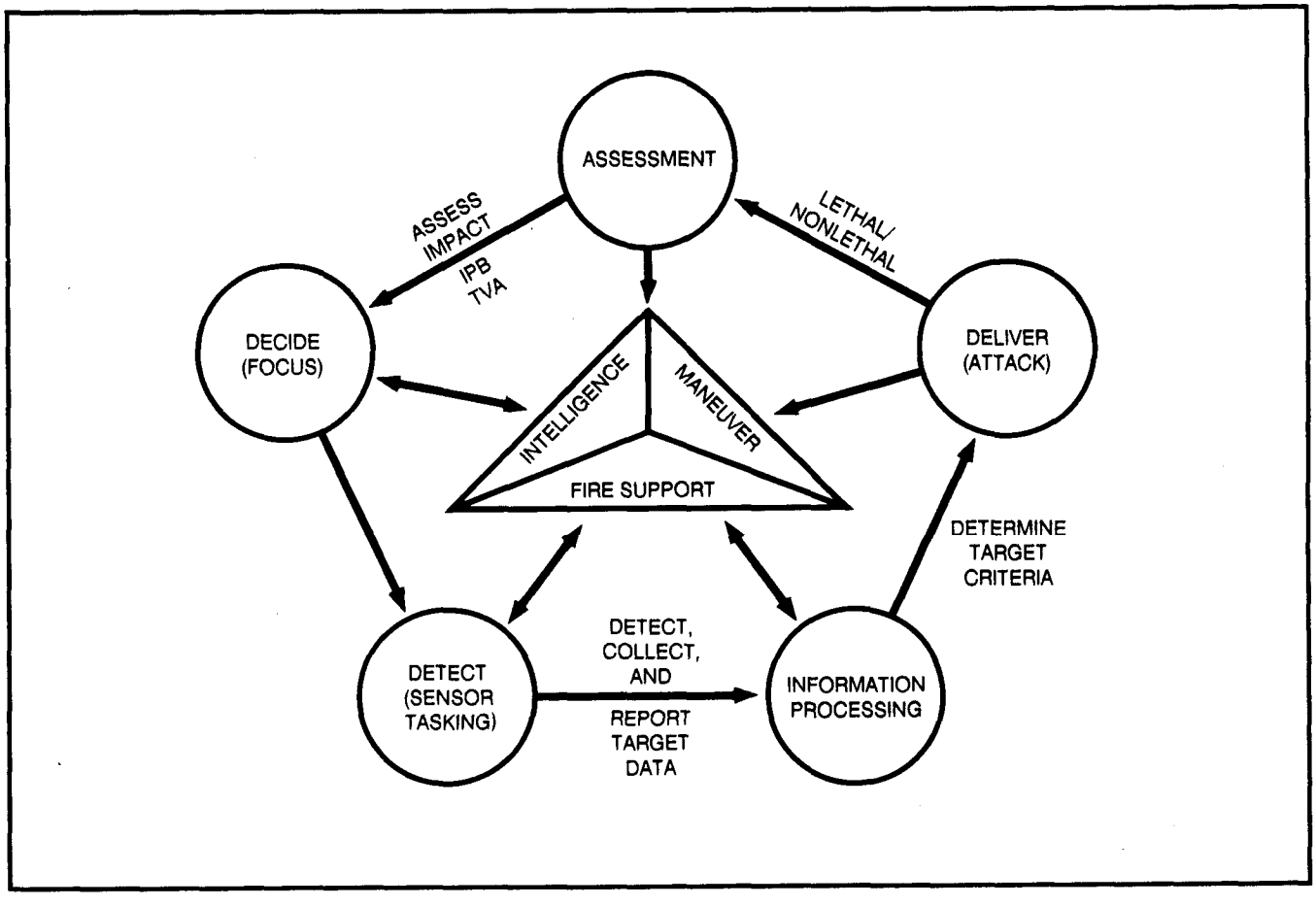

The *detect* function is performed by target acquisition (TA) assets designated in the intelligence operations and fire support plans of the operation order. All TA assets must be considered and used if applicable.

Finally, the deliver portion takes place when and where the guidance provided during the *decide* function has determined.

Intelligence Preparation of the Battlefield

One requirement for a successful attack is a thorough IPB. Important for all tactical operations, IPB is clearly critical if we are to avoid being surprised by the enemy. IPB provides much of the information for the intelligence estimate, which in turn impacts on the target development process. IPB is a continuous, systematic effort to analyze the enemy, terrain, and weather we will be facing during the attack. IPB seeks to evaluate Threat capabilities and helps staff members predict enemy courses of action as we press on with our attack. IPB also seeks to provide the corps and division commander and staffs a *window into the minds* of the enemy commander and his staff. From this, we may anticipate the enemy's reaction to our attack as well as predict what his courses of action would be if our present operation fails.

The initial IPB effort produces doctrinal, situation, decision support, and electronic templates. Templates of terrain factors and weather conditions are initially based on climatological weather records. Templates are later based on current and forecast weather and terrain conditions as the battle continues.

Target value analysis is used to identify high-payoff targets that support the commander's concept. TVA produces a high-payoff target matrix and an attack guidance matrix. TVA is conducted by the plans cell and is closely tied to the IPB.

Electronic Preparation of the Battlefield

The all-source production section (ASPS) at corps and division CPs and the EWS perform the initial electronic preparation of the battlefield (EPB) in support of the G2's IPB effort for the attack. The initial EPB is passed to the MI unit technical control and analysis element (TCAE). This element expands the EPB and correlates it with technical data, to include call signs and frequencies. EPB also examines the association of specific emitters with identified enemy units. It checks the radio line-of-sight from these emitters to potential locations of friendly EW assets. The result of the EPB is the identification of targets that are important to the enemy's defensive operation and that can be degraded with available EW assets.

Weapons Status

The need for responsive fires is a driving force in the assignment of tactical missions to field artillery units of the entire force. Yet, individual units must displace from time to time. They must rearm refuel, and maintain the weapons if they are to provide the support expected. This is particularly true of certain weapon systems, such as the MLRS or the semiautonomous howitzer improvement program (HIP) howitzer.

MLRS. The fire planner can ensure a reasonable response time upon which to base his fire plan by prescribing response posture options to the launchers. A detailed discussion of several options for the MLRS is in TC 6-60. To facilitate our main attack and the supporting attack operations, the fire planner should assign the *hot* status for MLRS units to ensure immediate response time for this system.

Sustainment for and continued fire support from MLRS can be facilitated by assigning some elements (launchers) a *cold* status when not needed for immediately responsive

support. These two options, or statuses, may be described as follows:

- All operational launchers are placed in the *hot (go)* status during surge conditions, such as a full attack scenario. Weapons so designated are expected to respond to a fire mission immediately. Launchers are in a position that eliminates or reduces the distance, if any, necessary to displace before firing. Crews are on board and fully alert. Estimated time of first round fired is 2 minutes.

- A *cold (no-go)* status extends the fire mission execution time by 30 minutes. Operations officers must order an upgrade from *cold* to *hot* as soon as a *hot* system is processing a mission. This is to maintain continuity of *hot* systems.

HIP Howitzer. In the case of the semi-autonomous HIP howitzer, the unit may be directed to limit survivability moves during critical phases of the operation. This ensures the maximum number of howitzers are available for firing.

Communications

Effective command and control, as well as coordination, depends heavily upon commanders, staffs, and subordinate commanders exchanging battlefield information on a timely basis. Although wire-dependent communications assume a smaller role, the mobile subscriber equipment system helps offset this loss in capability. Radios provide the primary means of communication for fire support coordination.

Survey

The establishment of a common survey grid is a command responsibility within each unified command. It is essential for the effective massing of indirect-fire systems.

Survey planning begins with understanding the maneuver commander's intent and receiving the FSCOORD's guidance. During planning, full consideration must be given to the commander's concept, priorities, tactical situation, survey control available, desired accuracy, number of installations, and METT-T factors. This information can be translated into survey requirements for the target acquisition sensors and the designated attack systems, which must be on a common grid by the time required. Aggressive survey planning that answers *who, where, when, why,* and *how* is absolutely essential to ensure mission success.

Planning and coordination originate at the corps survey planning and coordination element (SPCE), which is directed by the corps survey planning and coordination officer (SPCO). The corps SPCE ensures synchronization between topographic engineers, division artilleries, and nondivisional units and/or systems requiring common control. Coordination and planning at the div arty SPCE are done by the division artillery survey officer assigned to the div arty HHB. The div arty survey plan is further coordinated at the battalion level with the battalion reconnaissance and survey officer (RSO). Interface among all echelons of command must be maintained to ensure that common survey control can be provided to units in support of maneuver commanders. Coordination and synchronization of the corps survey plan are essential to mission success.

Separate field artillery brigades also have SPCEs organic to their HHBs. They plan and coordinate the interface of their organic survey requirements with those of the corps or division SPCEs.

Meteorology

Current ballistic met data must be applied for accurate artillery fires, battlefield forecasts,

radiological fallout predictions, and target acquisition. This information is in the form of met messages provided by the artillery met sections. Met sections are assigned to div arty, FA brigades, and FA battalions of separate brigades. It is the responsibility of the commanders (coordinating with the met officer and the S3 or G3) to position the met sections to best measure the atmosphere for support of all firing units involved.

Planning and use of the met section begins with the maneuver commander's intent, the FSCOORD's guidance, and the battlefield weather conditions. During the planning, full consideration must be given to the following

- Commander's concept.
- Mission priorities (type of met data required).
- Tactical situation and security.
- Prevailing winds (determine met section location).
- Location of units supported.
- Location of other met sections.
- Communications facilities.

Coordination and planning for met support begin at corps artillery with the corps ballistic meteorology manager (CBMM), the FSCOORDs, and the FSOs, The CBMM establishes liaison with all units involved and coordinates the met support requirements. The primary consideration is that the met station must be located where the sounding of the atmosphere will best represent the met needs of the supported units.

A typical corps artillery configuration may include two met sections positioned forward, where they can best sound the atmosphere through which most weapon trajectories will pass. They provide ballistic and target acquisition met data. Also, one section may be at the rear to provide upper air data for USAF weather teams. This information supports aviation missions, determination of chemical warning areas, prediction of radiological fallout areas, and preparation of weather forecasts.

Section III. RESERVE OPERATIONS IN SUPPORT OF ATTACK

Description

Contingencies for the use of reserves normally are a part of the corps or division plan. In the offense, a sizable reserve force exists. At the corps, the reserve may be a division; while at the division the fixed figure for a reserve force should not be estimated. Reserves can –

- Deal with enemy counterattacks.
- Reinforce or maintain momentum.
- Sustain the attack of committed units.
- Deal with a level III rear area threat.
- Provide security.
- Complete the destruction of enemy forces.
- Secure deep objectives.
- Open the next phase of a campaign or major operation by seizing objectives beyond the defined area.

Allocation

In organizing the artillery for combat and in allocating other fire support assets, the following must be considered:

- A plan for the use of fire support organic to or habitually supporting the reserve force until it is committed.
- Provision of adequate support to the force at the time of commitment.
- Factors of METT-T.
- Scheme of maneuver.

Missions of GS to the force, GSR to a div arty of a committed division and DS to a brigade are ideal missions for artillery of a reserve force. Positioning and ammunition expenditures can be controlled by the force artillery that has overall responsibility for fire support. This helps the units make an easy transition to their on-order missions once their force is committed. The GS or GSR mission also permits the unit to continue fire planning for its on-order mission without being too involved in the current battle.

Once the reserve is committed, all on-order missions are executed. Depending on the mission of the committed reserve, normally more than the organic or habitually supporting fire support is provided. Augmenting fires are provided by–

- Reinforcing artillery from corps assets or other div arty units now assuming a reserve mission.
- TACAIR.
- Naval gunfire, when available.
- Other agencies when used as fire support means.

Similarly, the targeting effort also focuses now on supporting the newly committed unit to ensure success.

Units assigned to rear security operations to counter level III threats or units that have follow-and-support missions are not considered in reserve. They require their own organic fire support or habitually supporting DS FA battalion. However, if only one brigade of a division has the rear area security mission, only that brigade needs its supporting DS FA battalion. Meanwhile, the other artillery battalions can be used to augment the fires of other committed units.

If the likelihood of commitment for the reserve force is immediate, the organic or habitually supporting artillery must be in position to support the force. Therefore, only limited support to committed elements may be provided by these units to ensure timely transition to their on-order missions.

Fire Support Considerations

Plan fires to support the commitment of the reserve during movement. Fires are planned –

- On the flanks to protect the force.
- On the way to the objective.
- On the objective to suppress, neutralize, or destroy targets.
- Beyond the objective to prevent counterattacks, to help consolidate the objective, and to prevent reinforcement of the objective area.
- On enemy elements that have been by passed.

Plan deceptive fires to deceive the enemy into thinking the reserve is committed elsewhere. These may be massed fires and smoke delivered on forward enemy elements.

Plan mass fires at the breakthrough point or at the point of assault to create a hole in the enemy defenses. Plan heavy suppressive fires

throughout the breakthrough area. Fires are continuous until maneuver closes.

Fire support coordinating measures such as CFLs must be well forward to ensure the force will not outrun them.

Plan to rearm refit, and refuel organic and supporting fire support before assumption of the on-order missions.

Section IV. RECONNAISSANCE AND SECURITY OPERATIONS

Employment

Reconnaissance and security operations are characterized by smaller forces spread over large areas. Generally, these forces are needed during a movement to contact which consists of a covering force, an advance guard, and rear and flank security forces.

Reconnaissance Operations

Reconnaissance operations are used to gather information through either route, zone, or area reconnaissance. Fire support contributes to the reconnaissance efforts by using aerial and ground observers, sensors, and radars to gather combat information and intelligence.

Fire Support Tasks

Fire support tasks are as follows:

- Orient on the location or movement of the reconnaissance objective.
- Report all information quickly and accurately.
- Help the force retain freedom of maneuver.
- Provide deceptive fires.

Allocation

Consider attaching FA assets to the supported reconnaissance force.

Fire Support Planning and Coordination

FA units must have mobility equal to that of the supported force.

Main body FA units should be positioned to support reconnaissance elements if possible.

Fire plans should be executed only if surprise is lost. It is not normally the intent of the reconnaissance elements to become engaged with an enemy force.

Plan UAV and TAR missions to help gather combat information and to avoid physical contact with the enemy.

Security Operations

Covering Forces

These are self-contained forces, operating at extended distances from the main body. A covering force is expected to penetrate the enemy's security zone, locate forces in the main defensive belt, and limit the ability of the

enemy's security forces to collect intelligence by stripping away his reconnaissance assets.

Fire Support Tasks. Covering force fire support tasks are:

- Provide responsive fires to covering force elements. To penetrate the enemy's security elements without becoming engaged in a direct-fire maneuver battle, fire support must be immediately responsive.
- Provide deceptive fires. Deception in covering force operations allows some freedom of maneuver in one area while the enemy's security elements react in another. This freedom of maneuver allows a penetration of security forces.

Allocation. Although the covering force is a self-contained force, it operates as a thin force over a relatively wide front. Normally, an armored cavalry regiment is tasked to be the covering force in a corps movement to contact; however, a division also may be tasked. In either case, the relative combat power of the corps covering force to the main defense of the enemy is unbalanced.

Fire support allocations to the covering force must make up for the combat power imbalance. For field artillery, this means extreme decentralization of assets. The corps should consider attaching FA brigade units to the covering force to provide enough FA of one DS battalion for each maneuver battalion- or squadron-size element. If possible, a mixture of calibers in the covering force (155 mm and 203 mm) helps to deceive the enemy as to the composition of the force. The mix of calibers, which may be achieved through cross-attachment, also maximizes the advantages of both weapon systems:

- 155-mm weapons provide rapid response time and a mix of munitions.
- 203-mm weapons provide a heavy punch and greater nuclear and chemical capabilities.

Other fire support allocations to the covering force may include CAS on ground or strip alert, EW, and UAV for reconnaissance and target location. Field artillery elements within the main body should be positioned so as to be responsive to covering force units when possible. This may be difficult for cannon units; but the MLRS, if positioned forward in the main body, can provide fires against enemy high-value targets in the main defensive belt. MLRS fires also provide a greater mixture of calibers responsive to the covering force.

Fire Support Planning and Coordination. Plan for hasty attack and/or hasty defense. The covering force may encounter a formidable force with which it must become engaged. If possible, the covering force will attack. If a hasty attack is not possible, the covering force must prepare a hasty defense and plan a deliberate attack or allow the main body to pass through and attack.

Plan for a passage of lines by main body forces (see Chapter 6).

Plan nuclear and chemical fires to block enemy avenues of approach and to deny essential terrain to the enemy.

Plan UAV, AFSO, and Air Force reconnaissance to help locate the enemy before physical contact.

Fire support coordinating measures should be permissive and on-order but well in front of the rapidly moving covering force. (CFLs should be established in conjunction with phase lines [PLs].)

Positions for FA units are best planned and coordinated by FSCOORDs and their FSOs.

Displacement will be frequent, and positions must be coordinated well in advance.

Fire plans should be simple yet as detailed as possible. Modification of fire plans must be expected throughout the covering force operation. Most fires will be fires against targets of opportunity.

Advance Guard and Flank Security Forces

These are normally furnished and controlled by the main body forces, while rear security forces normally operate under corps control. The advance guard must maintain contact with the covering force; and usually, it furnishes a liaison element to the covering force headquarters. The advance guard performs reconnaissance, conducts attacks, and delays or defends as necessary to give the main body time to react. Security forces (flank and rear) normally perform a screening mission because of the extensive distances covered by a moving corps.

Fire Support Tasks. Fire support tasks for guard and screening forces include the following:

- Responsive fire support for the security forces. The limited numbers of maneuver units over a large area (especially for a screening force) require very responsive fire support.
- Fires to prevent decisive engagement of security forces or to support decisive engagements when unavoidable.
- Suppressive, screening (smoke), and illumination fires to allow freedom of movement.
- Nuclear and chemical fires to block enemy approaches and deny terrain.

Allocation. As security forces operate at some distance from the main body, FA units may need to be attached to the supported force. Air support, to include CAS and tactical air reconnaissance, also must be allocated to security forces, as they may become engaged with a far superior force.

Main body FA elements should be positioned to support security forces whenever possible. This may require nonstandard tactical missions for the main body FA. For example, a main body FA battalion may be given a nonstandard tactical mission of DS with second priority for calls for fire to the security force headquarters.

Fire Support Planning and Coordination. An FA force attached to a security force must be as mobile as the supported force. In a fast-moving corps movement to contact, over extended distances, mobile FA units are necessary to keep up with the maneuver force.

Positioning FA units is best done through close coordination between maneuver and FA headquarters. The FSCOORD (FSO) is in the best position at the maneuver CP to locate, plan, and coordinate subsequent position areas. Displacements are required often and must be coordinated well in advance.

Mixed calibers of FA weapons usually are not possible in guard and screening missions. However, main body FA can be made responsive to these security forces if the FA is positioned forward and to the flanks of the main force.

Tactical air reconnaissance and UAV missions may be used to help develop the situation. Other aerial sensor information from corps may be linked directly or indirectly to security elements.

If available, COLTs and/or AFSOs designate targets for laser-guided munitions. Engagement of command and control vehicles before the situation develops allows the supported force to gain and retain the initiative.

Section V. DEEP OPERATIONS

Description

Normally, corps offensive operations focus on enemy units and support systems to the rear of the main defensive belt. Division deep operations normally focus on the main defensive belt second-echelon units and support. Fire support for deep operations may include the fires of field artillery, rockets, missiles, and air support; and lethal and nonlethal command, control, and communications countermeasures (C^3CM).

Deep operations may include the attack of the following general target types (not all-inclusive):

Follow-on echelons of the enemy.

- Independent tank regiments and/or battalions.
- Attack helicopter units.
- C^2 and fire direction nodes and facilities.
- Air defense systems.
- Nuclear delivery systems.

Allocation

Adequate fire support attack means and acquisition sensors must be identified and alerted for a possible deep operations commitment. Field artillery ammunition and fuel must be provided at the critical time and place. Army aviation assets must be retained until the force commander decides to employ his deep option. The factors that should be considered when designating potential deep fire support assets are discussed below.

Field artillery units may require nonstandard tactical missions or modified command relationships. This involves the establishment of ammunition expenditure restrictions and positioning instructions for accompanying FA units aimed at conserving fuel.

Fire support assets committed to the close operation may be required to provide SEAD fires for tactical air and Army aviation assets engaged in deep operations.

Specific fire support coordinating measures must be implemented. Airspace coordination areas (ACAs) must be established in conjunction with air corridors. Restrictive fire lines (RFLs) may be used to delineate the fires of converging ground and air forces.

AFSOs may be used to facilitate fire support coordination and execution.

Deep Targeting Considerations

Usually, targeting for fires and nonlethal attack means is focused on planned engagements. A planned engagement entails some degree of prearrangement such as general target location, weapon system designation and positioning, and munition selection. Planned engagements may be scheduled for a particular time or may be keyed to a friendly or enemy event. Other planned engagements may be specified by target type and may be on call based on the characteristics of the target; for example, dwell time or high-payoff considerations. Unplanned engagements may be conducted, but they must satisfy the same relevancy criteria as those of the planned engagement.

The targeting effort is performed by the plans cell. FM 6-20-10 details the members and duties of this functional grouping (cell) for each echelon.

Intelligence Preparation of the Battlefield

IPB, collection operations and management, and intelligence production are the key functional processes underlying IEW contributions to the deep fires *decide-detect-deliver* methodology. The maneuver commander's most critical role at every echelon in deep fires is in the *decide* phase. The decisions made here guide those who plan and control subordinate actions. They provide the frame of reference necessary for appropriate focus and synchronization of the assets available to the commander.

Decide Phase

Specific IEW contributions to the *decide* phase include the following:

- Situation development (ASPS of the corps CP support element).
- Target development (ASPS of the corps CP support element).
- Collection management (collection, management, and dissemination [CM&D] section of the corps CP support element).

Situation Development. Situation develop- ment includes the processing of all-source data to support battle management. It also includes developing and forwarding all-source reports and displays on the projected or current enemy situation. IPB provides a framework for situation development and guides mission planning, collection, and analysis.

Target Development. Target development is based on the commander's target selection and attack criteria. It includes the processing of all-source data to propose targets for nomination and the reporting of target damage assessment (TDA) (discussed in the *deliver* phase). Target development consists of the following functional procedures:

- Developing criteria.
- Processing immediate targets.
- Developing and nominating targets.
- Performing target damage assessment.

Members of the plans cell concentrate on locating high-value targets for consideration as high-payoff targets. High-payoff targets are then arranged in a high-payoff target matrix.

Collection Management. On the the basis of commander's intent, concept of operation, guidance on what targets should be acquired and/or attacked, and target selection standards, the G2 formulates his collection plan (where and when should targets be found and who can find them?). The collection plan is a dynamic tool used to coordinate and integrate the efforts of all collection units and agencies. Collection management is cyclic. It begins by processing information requirements (IR). These requirements may take many forms and are generated by many sources; for example, the commander's PIR and IR, targeting needs, taskings from higher echelons, and requests for information from subordinate and adjacent commands. In corps and division operations, most of these requirements are based on information needs associated with named areas of interest (NAIs) and target areas of interest (TAIs) developed through IPB. Once requirements are analyzed, the element must determine collection resource capability and availability. After availability is determined, units and agencies are selected and tasked to acquire and report information. During this process, all units and agencies are considered for tasking against every requirement. Capable assets are selected by a process of elimination, Collector and ASPS reports are then monitored throughout the collection process to ensure that intelligence and information are reported to the right user in a timely manner.

Target development, aided by the collection management process, is a cooperative effort between the G2, G3, and FSCOORD. The G2 identifies specific target sets associated with those critical Threat functions that could interfere with the friendly course of action. The G2's analysis of the ability of the corps or division to find relevant targets must be coupled with the FSCOORD's analysis of his ability to attack them. The FSCOORD determines availability of fire support assets and ammunition status. The commander then makes the final decision on relevant targets, attack means, and priorities for both acquisition and attack.

NOTE: For additional discussion, see FM 6-20-10. Additional coordination is made with echelons above corps and the Army BCE, located at the Air Force TACC. Thus, the necessary total AirLand Battle Interface is provided.

Detect Phase

Sensors. IEW sensors are cued to provide specific information on the high-payoff targets selected for actual attack during the *decide* phase. This usually is done while the sensors are conducting their routine collection efforts. The sensors give the artillery system last-minute target updates just before launch.

Tactical Missile System. The tactical missile system (TACMS) requires that valid information on target locations be provided to the deep fires system no later than 30 minutes before launch in a centralized mode and in near real time in a decentralized mode. The information which must be provided by the IEW sensors during this time consists of the four items discussed below.

Target Description. Target descriptions provide short summaries of what the target is; for example, a battalion assembly area or a regimental CP.

Target Location. Target locations are given in UTM grid coordinates of at least six digits. Altitude is included if possible. Geographic coordinates to the nearest minute may be required in some circumstances; for example, for deep battle air support.

Target Location Error. Each sensor type has an associated target location error (TLE). Analysts must ensure that the TLE associated with the target description meets the guidelines established in the attack criteria.

Dwell Time. Dwell time, or how long a target is expected to be at a designated location, is required for critical targets. If a time cannot be determined, the SOP established by the fire support system will be used to execute a firing or jamming mission. Accurate dwell times preclude reacting to old data that normally would cause wasted expenditure of resources, including ammunition.

Confirmation. Because execution time will be constrained, confirming detections can be based upon single-source sensor data when at least three conditions exist:

- The single-source sensor must be only confirming activity previously identified by all-source detection.
- The sensor must be capable of reliable discrimination and locational accuracy.
- The sensor must be capable of quickly communicating processed data to the corps CP.

These three criteria are met by the following systems:

- Guard Rail common sensor system.
- Corps IEW UAV system.
- Joint surveillance and target attack radar system (J-STARS).

Deliver Phase

Fire Mission Processing. Deep, operational fires are delivered with different attack means, such as field artillery tactical missiles. In terms of C^3, these fire missions are executed in either a centralized or decentralized manner or a combination of the two. The postattack assessment is a critical aspect of the deliver stage. It enables the fire support and IEW systems to determine the effectiveness of friendly deep fires and nonlethal attack means. This assessment determines the degree to which the attack has succeeded, and it provides an input back into the targeting system for future reference.

Quick Fire Channels. Most deep targets are detected through the all-source analysis performed in the ASPS. However, since execution time will be constrained, confirmation of target trigger event detection can be based on single-source sensor data if the enemy target behavior has been previously derived from all-source analysis. Quick fire channels may be established for this purpose and also to provide last-minute target data directly to the firing unit.

Deception

Deception measures can contribute to the success of deep operations and should be considered. These measures can be used to deceive the enemy as to the nature, time, or location of the deep operation. Fire support deception measures may include the following:

- Deception fires.
- False transmission on fire support nets.
- Movement of artillery.

Section VI. REAR OPERATIONS

Description

Operations

Rear operations are defined as those actions, including area damage control, taken by all units (combat, combat support [CS], CSS, and host nation), singly or in a joint or combined effort, to secure the force, neutralize or defeat enemy operations in the rear area, and ensure freedom of action in deep and close operations.

For purposes of this discussion, rear operations may be at all echelons down to division but not including brigade rear areas, which actually are considered to be part of the MBA. The rear area starts with the brigade rear boundary and extends through the boundary to the corps rear line.

Corps rear operations are those activities from the corps rear boundary forward to the rear boundaries of committed maneuver units which are conducted to ensure the corps freedom of maneuver and continuity of operations, including continuity of sustainment and command and control. The corps must synchronize the rear operations functions of terrain management, security, sustainment, and movement with the corps close and deep operations, in consonance with the corps commander's concept and intent.

Threat Activities

Soviet doctrine emphasizes the integrated conduct of tactical operations in their enemy's rear. The purpose of these operations is to seize and maintain the initiative while degrading or eliminating their enemy's flexibility and capability to sustain combat operations. To achieve these aims, Threat activities in a corps rear area target key facilities to include:

- Nuclear weapon storage and delivery systems.
- Critical corps command, control, and communications facilities.
- Air defense sites.
- Reserve assembly areas.
- Critical support and logistic facilities.

Three levels of response to Threat activities serve as a guide for planning rear operations. Rather than focusing on the size or type of threat, these levels focus on the nature of friendly actions needed to defeat the threat:

- Level I threats are those which can be defeated by base or base cluster self-defense measures.
- Level II threats are those which are beyond base or base cluster self-defense capabilities but which can be defeated by response forces, normally military police (MP) with supporting fires.
- Level III threats are those which necessitate the command decision to commit a corps combined arms tactical combat force to defeat them.

These Threat activities will not necessarily occur in a specific order, nor is there a necessary interrelationship between threat levels. The corps rear area may face one or more levels of Threat activities at one time. Also, some level I and II Threat activities will likely begin well ahead of general hostilities.

In addition to the Soviet capabilities outlined above, their doctrine integrates into their deep operations planning tactical air force and attack helicopter strikes; the delivery of long-range artillery, missiles, and rockets; and radio electronic combat. Thus, the complexity of Soviet deep operations capabilities and doctrine poses a formidable threat to corps rear operations.

Defense Against Threat Activities

Units are responsible for their own defense against level I threats. Each base or base cluster commander is responsible to detect defeat and minimize the effects of level I threats and to limit the effects of a level II threat. The best defense involves aggressive preparation of fighting positions, use of camouflage, sound and aggressive guard and security procedures, well-rehearsed reaction forces and evacuation plans, artillery fires planned in defense of positions, and so forth. In all cases the planning and reaction time will be minimal. It is possible that defeat of a strong level II force may require use of a reaction force ardor indirect fire. The key to success will be locating tracking and fixing the enemy.

Fire Support

Rarely will there be enough fire support assets available to satisfy the needs of deep operations, the MBA, and the rear area at the same time. The availability and timely use of fire support in rear operations are critical to the commander's overall battle plan. Rear operations are important to sustain the MBA forces and to ensure freedom of action throughout the theater. A successful rear operation may not directly affect the outcome of close or deep operations. However, its failure may destroy a commander's ability to conduct sustained combat operations and ultimately achieve campaign goals. Indirect-fire assets normally are not available, nor necessarily desirable, for employment against a level I threat. Operations against a level II or III threat require the timely application of fire support to ensure the defeat of the rear threat.

With few exceptions, indirect-fire assets should not be employed against a level I threat or against those level II threat forces that can be defeated by base or base cluster units or by the reaction force. These are usually individual or small-unit operations, of limited scope and duration, and provide too fleeting a target for successful engagement. Enemy forces, battalion or larger, which could comprise a level III threat have the

size, combat power, and identifiability which would require the use of indirect-fire assets.

Rear operations are also a command responsibility. The operations cell of the rear CP is the tactical center that controls rear operations at each echelon. Operations in the rear of brigade, division, or corps areas will have a profound effect on the conduct of close and deep operations. Therefore, such operations must be anticipated and plans must be devised to defeat the rear enemy. All plans, to include fire support for rear operations, are passed through the tactical chain of command to the rear CP.

The forces already on station are responsible for fighting the rear enemy initially. The immediate problem for the commander responsible for rear operations is how to manipulate his limited resources, including fire support, at the right time and place. Considerations that affect the application of fire support for rear operations are as follows:

- The reduction of fire support to the main battle effort.
- The suitability as determined by the overall tactical situation.
- The responsiveness of the available weapon systems.
- The precision and collateral damage effects of the weapon systems.
- The existence of communications nets to facilitate fire support activities.
- The availability of observers to identify targets and adjust fires.

Potentially, the whole spectrum of fire support systems is available for deployment in rear operations. Practically, some are more suitable than others and all depend on the factors of METT-T.

The FS cell is responsible for continuous evaluation of fire support assets available for rear operations. A Prioritized list should be developed and coordinated with the operations cell of the rear CP. As close and deep operations change the status of these fire support assets, this list must be updated. Only in this way can effective fire support be quickly provided to counter a level III threat or a level II threat which cannot be defeated by base or base cluster forces or by the designated reaction force.

Field Artillery

Two options are available for the deployment of artillery to support rear operations.

The first option is that artillery can be organized for combat to support the close operations (the covering force and the main battles) with on-order missions given to selected units for rear contingency plans. Artillery so organized must be capable of firing throughout 6,400 mils. It may be able to cover brigade rear areas from its forward positions. However, to engage targets for division and corps rear areas, it must be ready to displace rapidly to the rear. If attacks occur at the same time in the main and rear areas – a likely contingency– there will be conflicting priorities for fire support. There is also a time factor problem with this plan in that artillery may have to displace up to 50 kilometers (km) to engage targets in the corps rear area. The time for this deployment may render its support ineffective. Furthermore, it takes artillery already committed to close operations away from the main battle for an unspecified period of time. There are variations to this option. Corps artillery may be used to cover division and brigade rear areas but be positioned to fire at maximum range into the MBA.

The second option is the allocation of some artillery to the tactical combat force assigned to counter level II and level III threats. There is some merit to this idea, since one battalion split into battery fire bases could cover a considerable area of the rear zone. The use of air assault artillery in this role would facilitate coverage of the rear and speed response times.

Generally, the farther away from the FLOT the incursion occurs, the less likelihood there is that the threat may be met by FA sources. In the rear areas of the theater army, it is possibile that FA units either transiting or reconstituting may be used to provide fire support. However, the likelihood that they will be in range, complete with basic load and fuel, and in communication with the operations cell of the rear CP is remote.

Priority for MLRS is at present to deep operations. Although its range enables it to cover a large area of the rear, its ammunition type is unsuitable for close support and is apt to create extensive collateral damage.

If a target is within range, if an observer can engage the target, and if he has the communications to contact the firing unit, then FA remains the single most responsive all-weather, day-and-night fire support system for rear operations.

Mortars

Normally, mortars have insufficient range to engage rear areas, unless they happen to be in the vicinity of an attack. If reserve infantry battalions are in the vicinity, they may be deployed as a tactical combat force to defeat the threat; then their organic mortars would be of value. In the light role, mortars could be inserted by helicopter to provide an immediate asset until other systems can be deployed. They would require a secure base from which to operate and a logistical backup if they were to sustain fire support for a lengthy period of time.

Ammunition considerations for both artillery and mortars should, if time is available, include a request for ammunition for immediate consumption. The required supply rate (RSR) also must be increased to handle rear area (unforecast) consumption. The use of FASCAM should be severely limited. Under most conditions, it even should be ruled out.

Close Air Support

CAS provides a swift response to a threat in any area Immediate CAS can be requested through TACPs at maneuver command posts and through the rear CP operations cell. Aircraft can be directed to any part of the battlefield within minutes and can deliver an extensive range of munitions with precision accuracy. Terminal control presents, perhaps, the single largest problem for CAS. Most CAS aircraft must be guided onto a target, by voice and/or procedure control or by laser designation. Most CAS depends on weather and daylight. Fratricide is a real possibility and must be minimized in rear operations.

AC-130H Spectre

Gunships provide a suitable rear area fire support system. The reduced threat from air-to-air and ground-to-air antiaircraft weapon systems, together with its day-and-night capability and high volume of firepower, makes this aircraft ideally suited for rear area fire support It does have a VHF ground-link-to-observer capability; but it can also loiter over the target area acquire its own gun targets, and control its own engagement. Its weapon array of two 20-mm Vulcan cannons, one 40-mm cannon, and one 105-mm howitzer makes the system suitable for engagement of all types of threat.

Naval Gunfire

NGF may be suitable for rear area fire support when deployed in general support of a division or when given a nonstandard mission for rear area support. The suitability of NGF depends on the antishipping threat the hydrography of the area, and the ability of the ship to range suitable targets. One important factor is the large range dispersion pattern, particularly for the 16-inch gun, which must be considered in conjunction with assessment of collateral damage.

Army Aviation

Aviation brigades are units of which some elements may be used to provide fire support. The advantages of these units are their firepower,

reaction time, mobility, and ability to engage a target with precision and without the use of ground observers. They are also responsive on Army communications nets. Attack helicopters provide one of the most readily available assets to engage rear area incursions. They have the command and control structure, the mobility, and the firepower to engage large Threat forces autonomously, rapidly, and decisively. For attacks in the rear area, Army aviation in conjunction with CAS is probably the most effective form of attack. For EAC, it is probably the only means of attack that can neutralize the enemy swiftly and completely.

If available, AFSOs in OH-58D helicopters are a possible choice to support the rear area tactical combat force. They can help find the enemy force and quickly bring artillery fires on that force. AFSOs could be employed when the aviation brigade is the rear area tactical combat force.

Host Nation Support

In certain areas, host nation support (HNS) provides CAS, artillery, and mortars. For example, there is a well-defined infrastructure in the German Territorial Army. The Territorial Army is subdivided into three commands throughout Germany; each command is subdivided into division-size units called *Wehrbereichskommando* (WBK). Each WBK has a number of Home Defense Brigades, organized along regular army brigade lines. Each brigade has a battalion of field howitzers in close support. Two of the four maneuver battalions are equipped with 120-mm mortars. US Army units in the rear areas can expect to receive fire support from heavy mortars, 105-mm and 155-mm howitzers, and German Air Force CAS. The normal practice of exchanging liaison personnel among allies working in combined operations greatly facilitates such requests for support.

Fire Support Coordinating Measures

The primary fire support coordinating measures (Appendix F) are restrictive measures– restrictive fire areas and lines. They should be established by the operations cell of the rear CP. The procedures for establishing fire support coordinating measures in the rear area must become part of the overall planning process. Forces employed to deal with a level III force in the rear normally are given an area of operation. The establishment of a boundary within the rear and the possible addition of a force fire support officer require close coordination with the rear FSO. These measures should be reviewed routinely by higher headquarters; posted on rear CP operations maps; entered into TACFIRE; and given to the Air Force, reaction forces, and any TCF. Fire support coordinating measures that apply to rear area operations are discussed below.

Restrictive Fire Area. A restrictive fire area (RFA) could be established around a base or base cluster or along a main supply route (MSR). No fires or effects of fires are allowed inside the RFA unless requested by the base or base cluster commander. This permits fires in support of the base without the additional step of clearing those fires with the establishing authority. Fires along MSRs also are permitted without closing the MSR to our own resupply and troop movement. The restriction on the RFA can be on certain types of munitions (for example, no scatterable mines or no Air Force 500-pound or larger bombs with delay fuzes). The establishing authority can allow the use of these munitions if they are deemed necessary.

No-Fire Area. A no-fire area (NFA) could be established around population centers and critical facilities. This prevents any fire into these areas unless authorized by the establishing authority or in cases of immediate self-defense.

Restrictive Fire Line. An RFL should be established by the commander of combined forces. This should be done when using a tactical combat force. If the tactical force is non-US, the RFL must be established at the combined force headquarter that controls both the US and the non-US forces.

EAC-Host Nation Interface

At EAC, fire support coordinating measures must be coordinated extensively with the host

nation. They may, in fact, be established by the host nation. This coordination must ensure a common understanding of graphics and the exact meaning of the measures used.

Fire Planning

Overall fire planning responsibility belongs to the rear operations commander. He is assisted by his fire support staff members in the rear operations cell. It is anticipated that most fires will be on targets of opportunity.

Positioning Considerations

The supporting artillery must be positioned to support rear operations. Positioning coordination with the rear CP operations cell is necessary to avoid fratricide of CS and CSS units and destruction of critical supplies when field artillery and other fire support means receive Threat counterfire. This action also facilitates the ability of the rear CP to coordinate terrain management movement control, and sustainment.

Observers

The FA battalion personnel at all levels are possible target sources in the brigade area because of the high density of troops in the zone. These personnel include FS cells of maneuver units in reserve; gun battery reconnaissance, survey, and occupation of position (RSOP) and survey parties; and trains personnel. Distances at brigade level may be short enough for redeployment in a timely manner. From division back to theater army area command (TAACOM), the likelihood of observers already in position with communications is remote. Some repositioning would be necessary.

Aerial fire support observers and aeroscouts from the aviation brigade form a readily responsive, mobile asset. AFSOs can adjust artillery fire, and the aeroscouts have the necessary communications to provide emergency final CAS control.

Normally, military police are designated as the echelon reaction force. They are in place in the rear areas and have intimate knowledge of local terrain. They are trained in the adjustment of FA but not in the control of CAS.

Army target acquisition assets available for rear operations are limited. Most facilities are oriented to the close and deep operations. However, depending on the threat, the commander may reallocate some resources to the rear on an on-call basis. Some readily available assets can be oriented quickly to assist acquisition in the rear. These include the Mohawk-borne side-looking airborne radar (SLAR), side-looking infrared (SLIR), Quick Look (noncommunications emitter detection), and aerial photographic equipment. Also, the Guard Rail communications detection system is available through Army channels. The Air Force has a number of assets available. These include airborne warning and control system (AWACS), SLAR, AC-130 Spectre (with forward-looking infrared [FLIR] and low-light-level TV), photo imagery, and, ultimately, J-STARS. Some of these may be tasked to provide accurate locations for predicted fire support.

Fire Support Command and Control

The principles of fire support planning and coordination in the rear areas do not differ significantly from those in the forward areas. There is, however, a difference in the facilities available. MBA maneuver units are well- served by FSOs at all levels from company up to corps, are equipped with quick fire channels to the guns, and are adequately staffed. Rear CPs have only Limited manpower and limited communications facilities. Main operations will be fought and won in the forward areas; and this operation should, naturally, receive the preponderance of assets. The rear area is primarily a reinforcement and logistic zone, whose main function is to facilitate the rapid and efficient resupply of forward fighting units. It is not conceived as a combat zone. Nevertheless, if a level III attack occurs, or if a level II attack against high-priority units cannot be neutralized by

base, base cluster, or reaction forces, the rear area may temporarily assume an importance greater than that of the close operations. In this case, the maneuver C^2 must be agile enough to cope with the problem for time will preclude the shift of C^2 from the main CP to the rear. Similarly, the fire support planning and coordination channels should be able to complement the operational flexibility and provide rapid application of fire in the rear. This requires fire support personnel to advise the rear operations commander; and it requires communications to plan, coordinate, and call for fire support.

The nature of command and control in rear operations varies with the echelon of command The theater army rear presents problems which do not occur at the brigade. In general, the closer to the FLOT, the easier the problem of command and control.

Division

The FSO, in conjunction with the operations officer at the rear CP, is responsible for fire support planning. They establish and disseminate the communications procedures (net call signs, and so forth) to be used by rear area elements for planning and requesting fire support. Bases, base clusters, and response forces normally request fire support on the operations net or MCS (MSE, when available) to the rear CP. Calls for fire normally are not initiated by base or base clusters. They report situational information to the response force commander and the rear CP, who determine indirect-fire requirements and initiate the request. The response force, whose objective is to eliminate the Threat without commitment of the TCF, integrates all available fire support into its plans and operations. If no fire support agency has been dedicated to rear operations, response force requests for fire are sent to the FSO at the rear CP. The request is coordinated at the operations cell and forwarded to the main FS cell.

The most responsive approach to continue the mission depends entirely on the agency providing the fire support and the requesting unit. All indirect fires in the rear area must be observed fires. The rear FSO should talk directly to the agency providing fire support and the requesting unit on the same net. An AFSO, if available, can be used for this function. The FSO and/or AFSO provides the link between the fire support agency and any untrained observer. Some assets, such as attack helicopters and AC-130s, increase interaction because of their ability to actually observe the target and thus avoid nearby friendly elements. In fact, attack helicopters employed in conjunction with an AFSO may be the most responsive and efficient means of providing fire support to the rear area operations.

When the TCF is committed, one net from the supporting artillery unit can be used as the rear fire support net. The rear CP FSO and the DS artillery unit commander plan fires and position firing units where they can best support TCF operations. The rear CP FSO must carefully coordinate fires with rear area elements to avoid fratrocide.

Corps

The FSO located with the corps operations ceil of the rear CP conducts fire support planning and coordination. He effects fire support planning and coordination among the operations cell of the rear CP, the host nation, the corps MP brigade, the nuclear weapons logistics element (NWLE), the ASOC, the corps FS cell, the subordinate rear operations cells, and any fire support asset identified to provide fire support for the rear area. There is no digital interface from the corps operations cell of the rear CP to the corps main FS cell. An option to provide a digital interface is to position a corps artillery liaison section at the rear FSE, if the situation permits.

Fire support planning and coordination for corps rear operations are similar to those at division. The FSO collates base, base cluster, RAOC, and response force fire plans and coordinates the composite rear operations fire

support plan with the main FS cell and the TCF. Fire plans and requests for fire are passed to the rear CP FSE over the rear operations net or MSC (MSE, if available), except in cases when one net from a dedicated fire support agency is available for use as the rear fire support net.

Should the TCF with its supporting artillery be committed to a level III threat operation, the rear CP FSO will coordinate with the main FS cell for additional fire support assets as needed to assist base, base cluster, RAOC, or response forces in countering other level II or III threat incursions. The TCF will retain priority of fires. The FSO will provide specific guidance concerning control measures and who can call for fires (normally limited to response forces).

TAACOM and TAACOM Area Support Group

Echelons above corps may include TAACOMs as the next higher headquarters. Requests for fire support to the TAACOM and/or TAACOM area support group (ASG) operations cell are coordinated by the FS cell and planned by the plans officer. The tasking of fire support assets is passed from ASG operations cell to TAACOM reserves or corps assets. This tasking should include information about the signal operating instructions (SOI) for fire support assets to contact the ASG operations FS cells for coordination. At corps and TAACOM there is a requirement for a rear operations fire support net whose frequency is known to all transmitting units. This net could be monitored by all units in the area and both requests for fire and fire orders could be transmitted via the FS cell.

REAR AREA CLOSE AIR SUPPORT SYSTEM

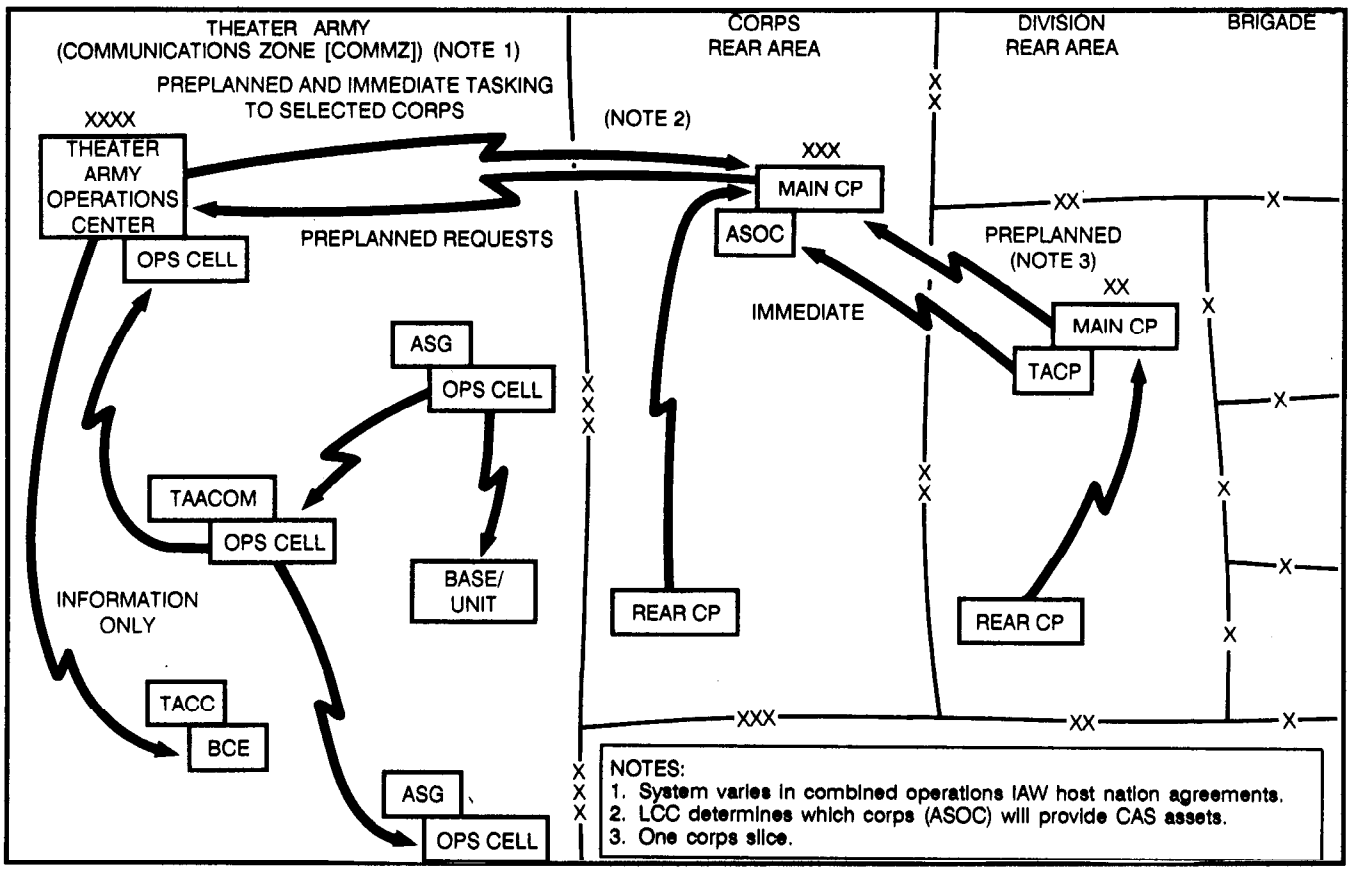

Section VII. EXPLOITATION

Description

Exploitation is an offensive operation that follows a successful attack to take advantage of weakened or collapsed enemy defenses. Indicators for exploitation are as follows:

- The enemy is having difficulty maintaining his position.
- Attacking divisions are making decisive gains.
- Enemy resistance, particularly supporting fire, is lessening.
- Deep surveillance operations detect a general enemy withdrawal.

Exploitation can be directed by the next higher headquarters or initiated by the corps commander or division commander. Its purpose is to prevent reconstitution of enemy defenses containing major enemy forces; to disrupt or to capture major enemy reserves; to secure deep objectives, cutting major lines of communication; and to position forces for future operations.

Allocation

Exploiting divisions should have as much TACAIR as possible. These aircraft can –

- Operate effectively when enemy defenses are crumbling.
- Quickly deliver massive amounts of ordnance.
- Operate across wide and deep sectors.
- Seek out, follow, and destroy withdrawing enemy forces.
- Present no rearming or refueling burdens to the land force.
- Block avenues of approach for counter-attacking enemy forces.

Other fire support required for exploitation forces should be highly mobile and flexible to respond quickly to the needs of maneuver. On-order priorities and on-order missions for field artillery must be designated to quickly shift priorities to units within the exploitation force and/or follow-and-support force if necessary.

Control of assets must be decentralized because of the decreased requirement for massed fires and the need for extremely responsive fire support. In organizing corps artillery for combat, attachment to divisions and, in turn, division artillery should be considered. This would ease command and control problems.

Fire Support Considerations

In fire planning for the exploitation, the following types of fires should be considered:

- Fires not only in front of the force but also to the flanks and rear.
- Massed fires on enemy choke points and key terrain to canalize, slow, and block the enemy movement.
- Suppressive fires to fix bypassed enemy pockets of resistance until friendly maneuver elements are safely past and follow-on forces can deal with them.
- Fires that do not create obstacles and barriers to our own forces and limit forward progress. Chemical and nuclear fires, in particular, can hinder forward movement if improperly placed.

Fire support assets should be positioned well forward and displaced continually.

Some available CAS should be on ground alert.

Fire support coordination should be completed early on. Use on-order measures to facilitate rapid emplacement and movement of assets. Consider placing RFLs between the direct-pressure force and the follow-and-support force.

Sustainment of the force is primarily an exercise in the movement of assets. The ability of the CSS structure to move forward with fuel, ammunition, and maintenance support determines the limits of advance for the force and force artillery.

Aerial resupply for units in exploitation is a planning option for consideration to sustain the operation.

Section VIII. PURSUIT

Description

When enemy resistance has broken down entirely, an attack or exploitation may give way to a pursuit. The objective of the pursuit is to maintain relentless pressure on the enemy and completely destroy him. The pursuit is characterized by broad decentralization of control and rapid movement. Because a pursuit is rarely anticipated, forces normally are not prepared for it. Also, lines of communication become increasingly difficult to sustain. In conventional warfare, pursuits are rare, mainly because a force is not able to sustain such an operation to its completion.

A pursuit operation is basically conducted by two attacking elements. One element provides continuous direct pressure against the enemy across a broad front, while another highly mobile enveloping element intercepts the enemy's retreat and destroys him.

Allocation

Field artillery organization for combat must be extremely decentralized to increase responsiveness of fires. Division and corps commanders should strongly consider attaching FA units to the force conducting a pursuit.

Also, air support must be extremely responsive to effectively slow the retreat of the enemy. Ground or air alert may be necessary to provide the degree of responsiveness required.

Fire Support Considerations

In planning fires for the pursuit, the following should be considered:

- Provide responsive fire support to both the direct-pressure force and the encircling force.
- Provide fires to slow the enemy's retreat and to allow the enveloping force to catch up. If FASCAM is used to slow the retreat, ensure safety zones for the minefields are disseminated.
- Provide fires to stop reinforcements.
- Use smoke to slow and disrupt the retreat.
- Use CAS and attack helicopters against hard targets and dual-purpose improved conventional munitions (DPICM) on soft-skinned targets.)
- Use quick fire planning techniques for hasty attacks.
- Plan for continual displacement of mortars and FA. Subsequent positions must be

coordinated through FS cells as early as possible.

- Plan for greater use of retransmission station (retrans) communications equipment.

NOTE: The AFSO can be equipped to provide voice or digital retrans for short periods.

- Provide fires to fix bypassed forces until follow-on elements can engage. Consider free-fire areas around bypassed pockets of resistance.
- Ensure that fire support coordinating measures are well forward to allow for the speed of the operation.
- Plan RFL when necessary between the converging, enveloping, and direct-pressure forces.
- Plan for increased petroleum, oil and lubricants (POL) and ammunition usage. Air transportation of supplies may be required. Use captured enemy materiel and stocks of supplies when possible.
- Plan the use of AFSOs, UAVs, tactical air reconnaissance, and surveillance aircraft. They are necessary for timely and accurate information about enemy locations and activities.
- Engage command and control elements with lethal and nonlethal means to disrupt the enemy's attempts to consolidate and reorganize.

EXAMPLE OF DIRECT-PRESSURE AND ENCIRCLING FORCES

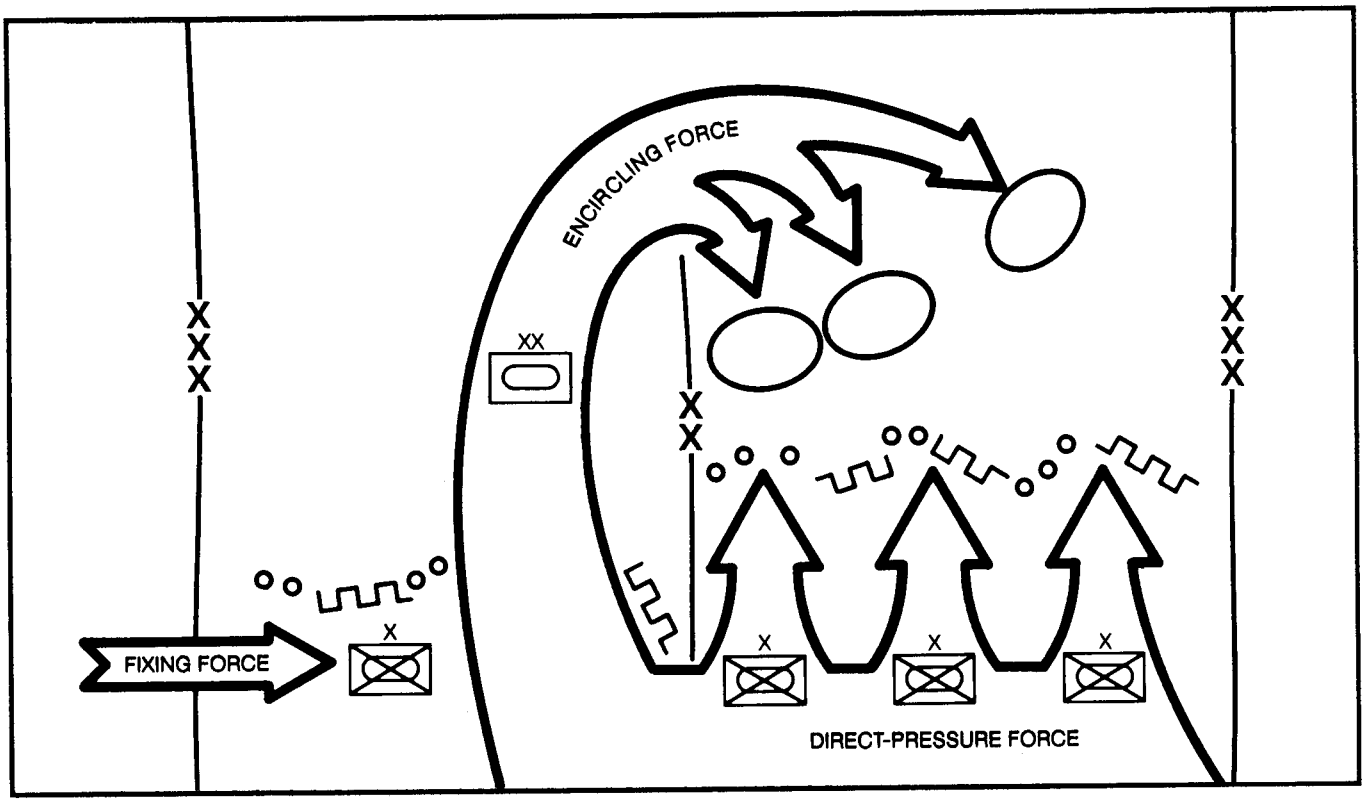

CHAPTER 5

DEFENSIVE OPERATIONS

Fire support for defensive operations can be described in terms of a defensive framework presented in FM 100-15. This framework shows corps and divisions using five complementary elements:

- *Deep operations in the arm well beyond the FLOT.*
- *Security force operations forward and to the flanks of the defending force.*
- *Defensive operations in the main battle area.*
- *Reserve operations in support of the main defensive effort.*
- *Rear operations to retain freedom of act/on in the rear area.*

DEFENSIVE FRAMEWORK

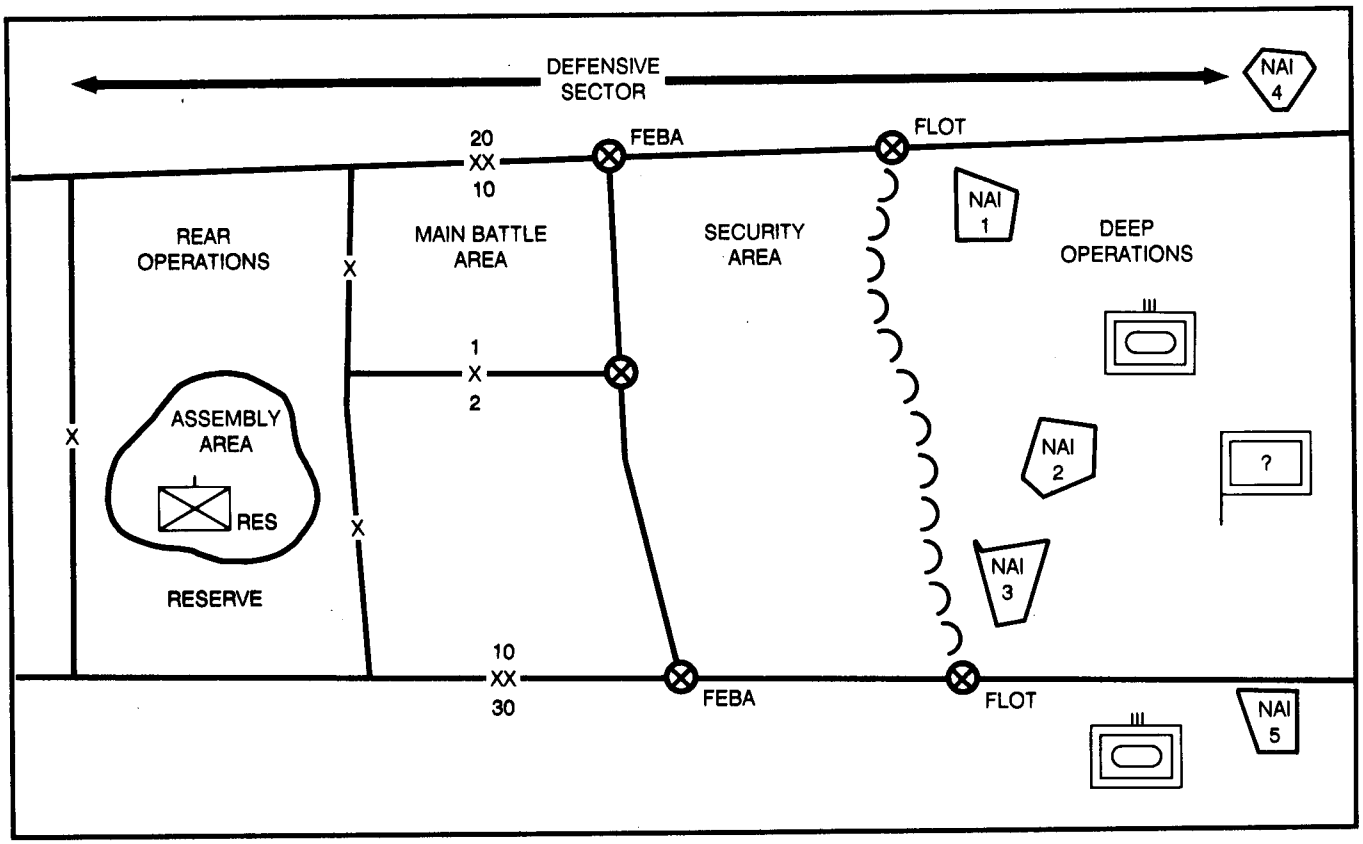

Section I. DEFENSIVE FIRE SUPPORT

Description

Success in the defense depends on the careful planning and execution, "as required, of fire support simultaneously in deep, close, and rear operations. Each of the five elements of the defensive framework must be considered when determining fire support requirements.

Basic Tasks

As in the offense, corps and division commanders normally ensure adequate fire support for defensive operations by retaining some assets and allocating others to subordinate units. The four basic tasks of fire support provide the guiding principles:

- Support forces in contact.
- Support all aspects of the battle plan.
- Synchronize fire support.
- Support and sustain fire support.

Support Forces in Contact

Supporting forces in contact usually means providing support for close operations. If done correctly, this task ensures the survivability of friendly forces and the freedom of maneuver. The various fire support assets support forces in contact in various time-tested roles and missions. The field artillery supports forces in contact in the defense by performing its traditional roles of close support, counterfire, and interdiction. The Air Force operations of CAS and SEAD are specifically intended to support forces in contact, although BAI normally directly affects ground maneuver forces.

Support the Battle Plan

Supporting the force commander's battle plan means retaining sufficient assets for any possible contingency. Fire support assets for the rear and deep operations must be identified. Doing this task gives the force commander the means to attack high-payoff targets whose destruction, neutralization, or suppression is necessary for overall mission success. The vagueness of the initial situation in the defense dictates that the force commander maintains more centralized control of his fire support. This is done at first by keeping more assets under his immediate control or by assigning FA units tactical missions that retain fire planning, priority of fires, and position authority at higher levels. This ensures responsiveness by those units in massing and shifting of fires.

Synchronize Fire Support

The synchronization of fire support at corps and division is essentially a command function. The FSCOORD is responsible for helping the commander integrate all fire support with the appropriate battlefield operating systems. A fire support synchronization methodology is found in the decide-detect-deliver approach to targeting and battle management. The successful use of this methodology enables the commander to attack the right target with the best weapon at the right time. Thus, the force commander can take the initiative in selecting, locating, and attacking high-payoff targets.

Support and Sustain

Fire support for defensive operations must be sustained through all phases of the operation. Fire support systems must be survivable without degradation of availability.

Attack and Acquisition Systems

Specific fire support attack and acquisition systems are allocated through the normal practices such as field artillery organization for combat. Assets will be allocated to –

- Provide deep fires to disrupt, delay, and destroy enemy follow-on forces before they can engage friendly forces.
- Provide counterfire to destroy, neutralize, or suppress the enemy's indirect-fire weapons.
- Provide SEAD to suppress enemy air defense weapons immediately before and during flight by friendly aircraft within the area of operations.
- Disorganize, delay, and disrupt critical enemy elements before the attack.
- Use both lethal and nonlethal attack means to apply constant pressure to the enemy's command and control structure.
- Acquire and attack high-payoff targets throughout the battlefield.
- Provide fire support synchronized with maneuver and command and control countermeasures (C^2CM) in the conduct of deep operations.
- Retain centralized control of fire support resources in order to concentrate fire at the decisive place and time.
- Provide fires to support counterattacks.

Nuclear Weapons

The allocation of nuclear fires is discussed in detail in FM 100-30. The table below summarizes the roles of nuclear weapons in defensive operations.

CORPS DEFENSIVE OPERATIONS

OPERATION	OBJECTIVE	NUCLEAR WEAPONS ROLE	CONSIDERATIONS
Rear	Retain freedom of action. Position operational reserves for future offensive action.	Ensure freedom of action.	Use nuclear mitigation techniques.
Close	Control FLOT, and destroy tactical echelons. Shape battle. Facilitate passage of operational reserves. Use covering force to slow the attack.	Attack maneuver, C^2, and delivery systems. Use economy of force. Deny use of terrain. Defeat assault echelon in MBA, attack reserve, protect flanks, and halt penetration. Destroy or defeat penetration.	Conduct vulnerability analysis. Consider flexible reserve.
Deep	Find enemy operational echelons. Disrupt tempo. Change enemy commitment plan. Maneuver to achieve operational objective.	Defeat and disrupt follow-on echelons. Create offensive opportunities. Disrupt forward flow. Change enemy plans. Destroy or disrupt logistic support. Create obstacles, and canalize enemy forces.	Target by using latent lethality defeat criteria.

Section II. DEEP OPERATIONS

Description

Deep operations begin before the enemy closes with the corps or division and continue throughout the battle. Deep operations are used to effect closure times of follow-on elements and to create windows of opportunity for destructive actions against them. A successful deep operation may cause the enemy commander to change his attack plan because it disrupts his flow of echelons as they move toward the FLOT.

Allocation

Fire support assets for deep operations are allocated by determining the friendly area of greatest vulnerability and predicting where the enemy will conduct his main attack. Specific considerations include the following:

- The provision of adequate fire support to achieve operational objectives.
- The destruction of high-payoff targets in enemy follow-on forces.
- The delivery of SEAD to support tactical air.
- The potential use of Army aviation as a means of providing deep fires.
- The use of AFSOs to facilitate fire support coordination and execution during operations.
- The use of chemical weapons to delay enemy follow-on forces, disrupt C^2, and deny critical facilities and assets (when use of these weapons has been approved).
- The use of nuclear fires to destroy enemy follow-on forces, C^2 facilities, and other high-value targets such as surface-to-surface missiles (when use of these weapons has been approved by proper authority).

Targeting

The decide-detect-deliver targeting methodology is used to plan and execute fire support for deep operations in a defensive situation just as it is used for the offense. (Refer to Appendix B and FM 6-20-10.)

Section III. SECURITY FORCE OPERATIONS FORWARD AND TO THE FLANKS OF THE DEFENDING FORCE

Description

Within the AirLand Battle defensive framework, security forces perform one of two functions: screening or covering force operations.

Screening force operations for the offense and defense are similar and require the same fire support considerations as discussed in Chapter 4.

Covering force operations in the defense differ from those in the offense in that an enemy attack is expected. Corps and division commanders plan to use the' advantages of the defender to defeat the enemy. To exploit these advantages, the covering force must provide the force commander with a developed tactical situation that allows the MBA forces to establish and execute a successful defense. Specifically, the covering force occupies a sector far enough forward of the FEBA to –

- Protect the MBA units from surprise.
- Allow the MBA forces time to prepare defensive positions.

- Prevent delivery of enemy medium-range artillery fires against MBA units.
- Deceive the enemy as to the location of the main defensive positions.
- Defeat a specified-size force or exact a specified percentage of damage to first-echelon forces.

The size and composition of the covering force and the covering force area depend on the mission, enemy, terrain, and available forces. Generally, a forward defensive covering force area should be deep enough to force the enemy to reposition his artillery and air defense forces before he attacks.

The level of command for controlling covering forces depends on the width and depth of the area, communications capabilities, available control headquarters, and the number of units in the covering force. Normally, corps and divisions control their own covering force operations. MBA brigade control of covering forces is less desirable. It takes away assets from the MBA, is difficult to control, and complicates reporting.

Fire Support Tasks

Fire support tasks for security forces are as follows:

- Engage the enemy early to strip away his reconnaissance elements. Specifically, these recon elements must not infiltrate and slip through the covering force. Early fires also help force the enemy to deploy his attack formations.
- Assist maneuver in moving and disengaging.
- Provide SEAD to allow attack helicopters and Air Force aircraft to attack. Destroy air defense radars located by EW.
- Engage engineer mobility detachments to reduce the enemy's engineer mine-clearing capability before he arrives in the MBA.
- Mass fires that will delay, disrupt, or limit the enemy's advance.
- Integrate fire and obstacle plans, and ensure obstacles are covered by direct observation.

Allocation of Fire Support

Normally, security forces operate at considerable distances from their main force and have only minimum maneuver combat power. Additional combat power must be provided to security forces in general and to covering forces in particular. This is done through decentralization of fire support assets. Decentralized fire support provides the responsive firepower needed to–

- Make Up for the lack of maneuver in relation to the large covering force area.
- Cause the enemy to deploy, thinking he has made contact with the MBA forces.

The degree of decentralization depends largely on the amount of fire support available. Consider assigning–

- One DS artillery battalion for each battalion-size maneuver element in the covering force.
- Nonstandard tactical missions to MBA artillery units to make them responsive to the covering force artillery headquarters.
- The preponderance of other fire support assets to the covering force. For example, UAV, CAS, EW, AFSOS, and TACAIR recon assets must be responsive to the covering force.

Considerations for allocating field artillery support to the covering force in the defense are similar to those in the offense as discussed in Chapter 4. Specifically, three factors must be considered: attachment, representative caliber, and mobility of fire support. At times, all of these considerations cannot be met because of the availability of types or caliber of weapon systems. Them planners must weigh the factors of METT-T against the overall goals of the maneuver commander's intent.

Attachment

Covering forces may operate at great distances from the MBA forces. Therefore, it may be very difficult to provide adequate support by only assigning a tactical mission. Problems of command and control may dictate a change to the normal command relationship. This is particularly true when covering forces are spread across a wide frontage or throughout a deep zone. The method of attachment depends on the control of the covering force. If the covering force is being controlled by the MBA headquarters, attachment of FA forces is not necessary. Normally, this is not the case and the covering force has a controlling headquarters of its own. Likewise, a covering force artillery headquarters may be designated. This is often done by attaching an FA brigade to the covering force. The FA brigade headquarters then becomes the force artillery headquarters, and the FA brigade commander is the FSCOORD for the covering force.

Representative Caliber

Artillery supporting covering forces should represent those cannon and rocket systems supporting the MBA forces. This helps deceive the enemy as to the location of our MBA.

Mobility of Fire Support

The field artillery supporting covering forces must be as mobile as the force it supports.

Fire Support Planning and Coordination

The keys to successful fire support planning for the defense, and particularly for the covering force, are staff interactions throughout the targeting process and the correct application of IPB and TVA. (See FM 6-20-10.) Initial planning should be as detailed as possible to exploit the advantages the covering force has when operating over familiar terrain with prepared defenses. Since the enemy has the initiative, predictive planning for all courses of action is necessary. Once execution begins, flexibility through detailed contingency planning is required to allow response to the unexpected.

Positioning of FA elements is a critical part of the detailed planning that must occur. A thin maneuver covering force may have to travel a greater distance to react to an enemy threat. Field artillery units may have to move laterally, forward, or to the rear to support the changing tactical situation. This requires detailed planning and rapid coordination on the part of the FSCOORD (FSO).

Fire support coordinating measures in the covering force should be permissive in nature to open the battlefield to responsive fire support. This can be done by planning successive, on-order CFLs as close to friendly troops as possible.

Crucial to the covering force battle are planning, coordinating, and executing the battle hand-over. As the battle progresses, a rearward movement will occur eventually. Maneuver units and their FSCOORDs must ensure that needed information gets back to the MBA units. Items such as targets, targeting information, status of covering force units, ammunition status, and requirements for positioning must be current. Positioning information is particularly important if control of the battle is to be passed smoothly to the

MBA force. Handing over the battle and the corresponding rearward passage of lines are difficult operations that require a massive planning effort. One of the key elements of the battle hand-over is the change of command and control of fire support. Control of indirect fires passes to the MBA force as the covering force hands over the battle. The hand-over is sequenced one sector at a time until the entire security force has been withdrawn. Management of this operation is critical, since the confusion of combat may cause some covering force units to pass through different units than originally planned. Detailed coordination between the passing and stationary force commanders and FSCOORDs is essential.

Similarly, the assumption of on-order tactical missions by the passing force FA units is difficult to manage. On-order missions must be carefully planned to facilitate the likely nonlinear battle hand-over.

Sustainment

Execution of combat service support for security operations must be in concert with the overall operation. The CSS must be coordinated with tactical operations in the rear and in the MBA.

Sustainment of security operations is a corps responsibility. When nondivisional units are given the mission, corps support command (COSCOM) assets directly support these units. When divisions conduct security operations with division assets, the corps sustains the division in its habitual manner.

Only those CSS assets immediately essential to the operation should be positioned forward in the security area (fuel, ammunition, medical, and limited maintenance). These assets should be withdrawn when no longer required or when the risk of their loss becomes unacceptable.

Section IV. MAIN BATTLE AREA DEFENSIVE OPERATIONS

Description

The MBA extends from the FEBA back to the rear boundary of the brigade for the division and to the rear boundary of the division for the corps. Normally, most of the defending force is deployed in the MBA to defeat the enemy's main attack. Since the decisive defensive battle is often fought in the MBA that is where forces are concentrated. The mission of the MBA forces of the corps covers the entire spectrum of operations. Thus, while the corps as a whole may be engaged in defensive operations of the MBA units within the corps area (divisions, brigades, and task forces) may well be conducting any or all of the following operations:

- Defend — control a limited area or position.
- Delay—control an enemy.
- Attack –enemy- or terrain-oriented.
- Security and economy-of-force tasks.
- Forward and rear passage of lines.
- Movement to contact.
- Bypassed operations and/or encircled operations.

Thus, there will be differences in the way combat forces fight the defensive battle. Both heavy and light forces can conduct these operations. Task forces from the covering force join the MBA fight as they become available.

Fire Support Considerations

Fire support in the MBA is used to slow, stop, or destroy attacking forces. The enemy is

detected early and attacked continuously with all available fire support means. Fires across the entire front force the enemy to deploy early into his attack formation. Fires in the economy-of-force areas are dense enough to slow or divert his supporting formations. When he masses, his formations must be attacked repeatedly and effectively with massed fires to reduce his momentum. Deep fires against the attacker's follow-on forces keep them from influencing the immediate battle.

Fire Support Tasks

Fire support tasks in defense of the MBA are as follows:

- Mass fires to canalize and stall enemy forces, increase engagement, and destroy attacking elements.
- Isolate enemy first-echelon elements by attacking follow-on forces.
- Support friendly strongpoints.
- Support obstacles to slow breaching attempts.
- Suppress enemy air defenses.
- Help support rear operations by fire.
- Provide counterfires.
- Deny the enemy use of chosen avenues of approach.
- Suppress and obscure enemy overwatch positions.
- Force enemy armored vehicles to button up and slow down.
- Support counterattacks, or conduct counterattacks by fire.
- Provide an economy-of-force measure that augments maneuver assets and frees them for other critical areas.
- Mass fires on enemy avenues of approach.
- Coordinate TACAIR to engage major armor formations and follow-on forces.
- Support disengagements of maneuver elements and repositioning to subsequent battle positions.
- Reinforce obstacles by use of FASCAM.

Allocation of Fire Support

Fire support for the MBA battle is allocated with priority to the most vulnerable area. Usually, this area coincides with the enemy's most likely avenues of approach and main attack. While fire support for the defense in general is most responsive when centrally controlled, the most vulnerable area of the MBA must be weighted more heavily with immediately responsive fires. Reinforcing field artillery, immediate CAS sorties, EW, and targeting assets can be used to provide responsive support to forces bearing the brunt of the enemy's attack.

Fire support for the MBA must be allocated as early in the estimate process as possible to allow commanders enough planning time. The proper integration of IPB and TVA gives commanders the best guess on likely enemy courses of action. This analysis is then used to prepare contingencies for the main battle. The covering force develops the situation and dictates which contingency should be executed. Appropriate fire support must be allocated for each of these contingencies. As much fire support as possible should be centrally controlled to facilitate a quick and smooth transition into any contingency plan. Fire support under centralized control allows the force commander to quickly shift combat power without moving maneuver forces.

Positioning of Field Artillery

At first, FA units may be positioned in forward supplementary positions in the MBA to allow for deeper fires. Supplementary positions should be –

- Along routes that facilitate displacements into the main battle area.
- Selected to provide good cover and concealment to minimize their vulnerability to enemy air attack.

As the battle develops, FA units may find themselves astride an enemy route of advance. When possible, these units should be repositioned along the flanks or deeper in the MBA. This gives maneuver forces room to operate and reduces untimely displacements during the battle. Positions selected must be coordinated with the maneuver commander responsible for the terrain. (See FM 6-20-2.)

Target Acquisition

The key to good combat information is knowing how the enemy will attack and knowing what to expect. For corps and divisions, FSCOORDs and their staffs are excellent information sources. Also, the field artillery has excellent combat communications by which to transfer this information.

In the MBA radars should be focused on the enemy's main effort. This is where the enemy can be expected to concentrate his indirect-fire weapons. Weapons-locating radars should be positioned to maximize lateral coverage immediately forward of the MBA.

As MBA forces are repositioned to meet an enemy main effort, target acquisition elements also should be repositioned. Displacement of these resources should be staggered so that some coverage is always available.

AFSOs can provide target acquisition and can cue other TA systems. The AFSO also can hand off and designate targets for Army aviation and Air Force attack.

Communications

The handoff of the battle from covering forces to MBA forces is a critical point in the defense. Effective command and control is especially important to ensure a smooth changeover and continuous and effective fire support. Communications must be established between MBA and covering forces before control of the battle changes. This is best achieved when MBA force artillery monitors the nets used by covering force artillery before the battle hand-over.

Radio communications should preclude the following:

- Covering force artillery having to change frequencies at a critical time.
- Issuing additional SOI extracts to units in the covering force. This reduces the possibility of SOI compromise.
- Early use of the MBA nets and possible detection by enemy jammers or direction-finding equipment before the MBA fight.

Suppression of Enemy Air Defenses

The heavy use of friendly aircraft may be needed during combat operations. Enemy air defenses must be suppressed to let friendly aircraft operate in the airspace above or near those defenses and their associated equipment and facilities. This requires a coordinated effort between air and land elements to locate enemy facilities and to plan and execute SEAD operations with all available lethal and nonlethal means. Usually, the land force management of SEAD fires is centered at the division main FS cell; however, SEAD can be planned, managed, and executed at all echelons.

Normally, SEAD is planned at the division main FS cell or below. Targets of concern to the air elements are processed here and assigned to appropriate fire support or EW agencies.

Because fire support is limited, the force commander must indicate his priority for SEAD targets. The FSCOORDs plan accordingly.

Individual requests by flight leaders (pilots) for SEAD support are treated as targets of opportunity (immediate targets).

Counterpreparation Fires

Counterpreparation fires may be used if the maneuver commander desires. These fires are designed to break up enemy preparations for the attack and the continuity of his attacking elements. Acquisition resources and targeting efforts are directed toward detecting enemy forward elements, indirect fire support means, observation posts, command posts, and reserves. Counterpreparations are fired when the enemy attack is imminent.

Nuclear Planning

The corps commander has the principal responsibility for operational planning and execution of nuclear fires. He develops and issues his planning guidance. The planning effort must then be focused on these contingencies and developed into the corps nuclear package. The package contains division subpackages that include nuclear fires delivered by the division artillery, Air Force, and supporting FA brigade. The corps main FS cell must know the status of all nuclear-capable delivery units.

Section V. RESERVE OPERATIONS IN SUPPORT OF THE MAIN DEFENSIVE EFFORT

Description

The primary purpose of reserves in the defense is to preserve the commander's flexibility. The reserve is the commander's main means of deciding a battle in progress or of affecting future operations. The commander should decide the mission, composition, and size of the reserve on the basis of his estimate of the situation.

Reserves may be air or ground maneuver units. When the reserve is committed, all available fire support will be used to support it. The committed reserve becomes the main effort of the commander, and all combat power is concentrated there by the force.

In the mobile defense, the reserve is relied upon to strike the decisive blow. When conditions favor counterattack, the main effort shifts to the reserve, which then strikes with overwhelming combat power. The FSCOORD helps by integrating the available fire support.

Commanders can use reserves to–

- Counterattack to exploit enemy vulnerabilities (flanks, support units, and unprotected forces in depth).
- Reinforce forward positions.
- Block penetrating enemy forces.
- React to rear area threat.

Fire Support Tasks

Fire support tasks for the reserve are as follows:

- Plan fires to support the commitment of the reserve during movement.

- Plan fires to strike at objectives in depth as enemy dispositions are revealed. This is to support the committed reserves and to break up the enemy's coordination of the attack in the area defense.
- Plan fires on the enemy's flanks and rear where counterattacking forces are committed in the mobile defense.
- Plan deceptive fires to deceive the enemy into thinking the reserve is committed elsewhere.
- Plan for fire support coordinating measures such as a restrictive fire line in case of converging forces in the mobile defense or a restrictive fire area to safeguard strongpoints in the area defense.
- Plan to rearm, refit, and refuel organic and supporting fire support before assuming on-order missions.

Allocation

In organizing the artillery for combat and in allocating other fire support, consideration must be given to the following:

- A plan for the use of fire support organic to or habitually supporting the reserve force until it is committed.
- Providing adequate support to the force at the time of commitment.
- Factors of MET-T.
- Commander's estimate of the situation.
- Commander's intent.

As in the offense, a mission of GS or GSR is best for artillery units designated to support reserves once committed.

Once the reserve is committed, organic and habitually supporting field artillery is augmented by other lethal and nonlethal fire support. Nuclear weapons also may be considered as reserves and set aside for eventual commitment if their use has been approved by proper authority.

Unnecessary changes in organization and time-consuming movements should be avoided to ensure adequate support for the committed reserve. Timely fire support planning ensures timely support. The use of an FA brigade headquarters as a fire support planning agency for the counterattacking force should be considered. This would free the division artillery of this task.

Section VI. REAR OPERATIONS

Description

Corps or division rear operations in a defensive posture require increased vigilance against the more pronounced threat to our rear area. Rear operations are situational and are planned for as a contingency. They are waged as the need arises and with the intensity necessary to meet the threat level. Attempts to disrupt or destroy command and control, combat support, and combat service support activities can be expected. Operations in the corps rear must be planned to deal with levels I, II, and III threats.

Defense Against Threat Activities

Bases or base clusters are responsible for their own defense against level I threats. The best defense involves aggressive preparation of fighting positions, use of camouflage, sound and aggressive guard and security procedures, well-rehearsed reaction forces, and evacuation plans. Often, the planning and reaction time is

minimal. Defeat of a strong level II force requires the use of a response force and may require support by indirect fire.

The commander must allocate combat forces to defeat level III threat forces. This tactical combat force normally is a brigade equivalent at corps and a battalion equivalent at division. Fire support for the TCF should be provided for by an on-order DS mission for an artillery unit. This requires the force artillery to plan positioning of units in anticipation of that requirement. Other fire support means available may be naval gunfire, TACAIR, and Army aviation. Army aviation is particularly well suited for providing rear operations fire support because of its ability to observe the target, its mobility, and its firepower.

Fire Support

Rarely will there be enough fire support assets available to satisfy the needs of deep, close, and rear area operations at the same time. The availability and timely use of fire support in rear operations are critical to the commander's overall battle plan. Rear operations are important to sustain the MBA forces and to ensure freedom of action throughout the area of operations.

With few exceptions, indirect-fire assets should not be employed against a level I threat or against those level II threat forces that can be defeated by base or base cluster units or by the response force. These threats are usually individual or small-unit operations, are of limited scope and duration, and provide too fleeting a target for successful engagement by indirect-fire assets. However, Threat forces beyond base or base cluster self-defense capabilities may require the use of indirect-fire assets.

Operations in the rear of division or corps areas will have a profound effect on the conduct of close and deep operations. Therefore, such operations must be anticipated and plans must be devised to defeat the rear enemy. All operational plans, to include fire support for rear operations, are passed through the tactical chain of command to the rear CP.

The forces already on station are responsible for fighting the rear battle initially. The immediate problem for the force commander in providing fire support assets for rear operations is how to synchronize his limited resources at the right time and place. Considerations that affect the allocation of fire support for rear operations are as follows:

- The reduction of fire support to the main battle effort.
- The suitability as determined by the overall tactical situation.
- The responsiveness of the available weapon systems.
- The precision and collateral damage effects of the weapon systems.
- The communications nets available to facilitate fire support activities.
- The availability of observers to identify targets and adjust fires.

Potentially, the whole spectrum of fire support systems is available for deployment in support of rear operations. Practically, some are more suitable than others, and **all** depend on the factors of METT-T.

The FS cell is responsible for continuous evaluation of fire support assets available for rear operations. A prioritized list should be developed and coordinated with the operations cell of the rear CP. As close and deep operations change the status of these fire support assets, this list must be updated.

The same fire support assets and fire support coordinating measures applicable to offensive rear operations apply to defensive rear operations. (See Chapter 4.)

Fire Support Command and Control

The principles of fire support planning and coordination in the rear areas do not differ significantly from those in the forward areas. There is, however, a difference in the facilities available. Rear CPs have only limited manpower and limited communications facilities. Nevertheless, if a level III attack occurs, or if a level II attack against high-priority units cannot be neutralized by base, base cluster, or response forces, the rear area may temporarily assume an importance greater than that of the close operations. Fire support planning and coordination channels should be able to provide rapid application of fires in the rear. This requires fire support personnel to advise the rear operations commander; and it requires communications in order to plan, coordinate, and call for fire support.

The nature of command and control in rear operations varies with the echelon of command. Since there is no dedicated rear area fire support net, the operations cell must establish and disseminate the communications procedures to be used by rear area elements for planning and requesting fire support. Although they are not all-inclusive, the operations cell should consider the following options:

- Rear area operations net (FM). The operations net may become overloaded, thus reducing fire support responsiveness.
- Multichannel communications system (or MSE, when fielded).
- One net from a dedicated fire support agency (such as a field artillery or attack helicopter battalion). This option provides maximum responsiveness but is not practical until the fire support agency is dedicated, not just on order.
- A spare or alternate net identified to be used as a rear area fire support net.

While the FSO in the heavy division rear CP has a VFMED that provide; a digital link with the main FS cell and the div arty CP, the FSO at the corps rear CP does not have a digital capability. Consider providing one liaison section from HHB, corps artillery, to the corps rear CP. The liaison section VFMED would provide a digital link with the corps artillery CP and the main FS cell.

CHAPTER 6

OTHER OPERATIONS

This chapter Implements STANAG 2082, Edition 5, Amendment 3.

This chapter addresses the fire support considerations in the conduct of other corps and division operations. These operations may be conducted in combination, sequentially, or as a single operation. All of these operations are inherently difficult to plan and support. Actual methods for their planning and execution vary with the factors of METT-T as they apply to each corps and division. The following operations are discussed:

- *Retrograde operations.*
- *Passage of lines.*
- *Encircled forces.*
- *River-crossing operations.*
- *Heavy and light forces mix.*

Section I. RETROGRADE OPERATIONS

Description

A retrograde operation is an organized movement to the rear away from the enemy. It may be forced or voluntary. In either case, a retrograde operation must be executed according to a well-organized plan. A disorganized retrograde operation in the face of enemy strength invites disaster. The three types of retrograde operations are as follows:

- Delay — A unit gives up space to gain time.
- Withdrawal — All or part of a deployed force disengages from the enemy voluntarily to free itself for a new mission.
- Retirement — A force not in contact with the enemy conducts an administrative move to the rear.

Within a large command like a division or corps, a combination of retrograde operations is usually necessary. For example, a retirement may be preceded by a withdrawal from action or may be covered by a force executing a delaying action.

Retrograde movements are executed to do one or more of the following:

- Disengage from combat.
- Avoid combat under undesirable conditions.
- Draw the enemy into an unfavorable situation.
- Gain time without fighting a decisive engagement.

- Place forces involved in a more favorable position.
- Permit the use of a portion of the force elsewhere.

Delay

A delay is conducted when forces are insufficient to attack or to defend or when the defensive plan calls for drawing the attacker into an unfavorable situation. In delaying operations, units trade space for time in order to –

- Reestablish the defense.
- Cover a defending or withdrawing unit.
- Protect the flank of a friendly unit.
- Participate in an economy-of-force effort.

In ordering a delay, the corps or division commander specifies the following

- What must be done — the intent of the operation; that is, the length of the delaying operation – to delay the enemy forward of a line until a certain time.
- Mission, composition, and location of the corps or division covering force.
- Task organization.
- Control measures, to include phase lines, routes, and control points.
- Employment of nuclear or chemical fires when appropriate.
- Fire support,
- Combat service support.
- Hand-over of battle of covering force.

Fire Support Tasks

The fire support tasks for a delay are as follows:

- Attack enemy forces far forward.
- Assist maneuver in disengagement.
- Support limited counterattacks by fire.
- Cover obstacles, barriers, gaps, and flanks with fires and scatterable mines.
- Provide maximum continuous fire for maneuver forces as they displace to the rear.
- Mass fires to slow the enemy as he deploys to concentrate for attack of our delay positions.

Command and Control

Decentralized control is preferred. It may be necessary to attach field artillery units when operating on a broad front, Enough artillery units are provided to ensure one DS unit per committed battalion or squadron.

Fire Support Planning and Coordination

Initially, position fire support assets well forward to exploit range. Prepare a plan of interdiction fires covering main hostile avenues of approach. Later position assets in depth to provide maximum continuous fire.

Plan fires –

- On barriers and natural obstacles.
- To create obstacles with scatterable mines.
- To support strongpoints.
- To cover and screen withdrawals. Use smoke extensively.
- To support hasty counterattacks.

- On enemy forces congested behind obstacles and/or minefield and to slow breaching attempts.

Use immediate close air support to help disengage and to slow advancing enemy forces.

Withdrawal

Withdrawals are conducted when it is necessary to move away from the enemy to reposition forces on more favorable terrain, to conserve resources for future operations, to gain time, or to avoid combat under unfavorable conditions. Withdrawals may be conducted under or free of enemy pressure and with or without the assistance of friendly units. Regardless, they always begin under the threat of enemy interference and should be planned accordingly.

Corps and division commanders organize a covering force and a main body when conducting a withdrawal, The covering force prevents effective pursuit or interference with the withdrawal of the main body. The main body, prepared to defend itself, forms behind the covering force. It moves to the rear protected by advance, flank, and rear guards. The withdrawal plan should include a deception plan and provisions for the covering force or main body to defend or delay if necessay. Air and ground reserves should be made available to support the withdrawal. Whenever possible, withdrawals take place at night or in adverse weather to delay detection by the enemy. To avoid signaling intentions, deceptive efforts are also necessary for units considering withdrawals.

Units must anticipate withdrawing under enemy pressure. The covering force fights a delay to permit the withdrawal of the main body. Main body units reinforce the covering force as necessary and delay or defend themselves if the covering force fails. If the withdrawal is without enemy pressure, the covering force may remain in position to prolong the deception. The main body moves to the rear as fast as possible. The covering force moves when the main body has withdrawn a safe distance.

Fire Support Tasks

Fire support tasks in a withdrawal are as follows:

- Mask the movement of friendly forces with smoke.
- Use fires to slow the enemy. FASCAM is particularly useful.
- Cover obstacles with fire and observation.
- Jam enemy command nets to slow the enemy's reaction to a withdrawal once it is under way.
- Use deep ties to relieve pressure on units in contact.
- Provide final protective fires when necessary.
- Be prepared to support a delay.

Allocation of Fire Support

All available fire support assets must be responsive to the withdrawing force. Decentralized control of fire support, especially field artillery, is necessary to be adequately responsive. In fact, attachment of field artillery to maneuver maybe necessary to reduce the span of control. The maneuver covering force must be weighted with field artillery to increase combat power. One FA battalion in direct support of one maneuver battalion in the covering force is desired. Reserves of the withdrawing unit may remain well forward to assist by fire or to launch spoiling attacks. The priority of tactical Air Force missions in a withdrawal may be to maintain local air superiority over the main body. CAS and BAI over and beyond the covering force may be difficult because of the

danger of enemy air action and air defense during a withdrawal.

Fire Support Planning and Coordination

The fire support planning aspects of a withdrawal are very similar to those of a delay, as the FSCOORD must **plan** for a withdrawal under pressure. The enemy must be slowed down as he concentrates his forces. Because maneuver units are moving while this occurs, the use of terminally-guided munitions against high-payoff targets is essential. Deep fires also may be useful in relieving pressure on units in contact with the enemy. SEAD fires to support BAI missions must be planned.

Displacement of field artillery elements, as with all elements in a withdrawal, requires extensive movement control to preclude congestion on routes. Since movement may be rapid, coordination of routes and positions is a continuous effort.

Retirement

A retirement is a retrograde operation in which a force that is not engaged with the enemy conducts either a tactical or an administrative move to the rear. Artillery units are generally integrated with the maneuver units. They are given GS missions with on-order missions of direct support to their habitually supported units.

Security forces covering the retirement of other forces are given enough fire support to deal with guerrillas, air assaults, and long-range fires. (See Chapter 4 for a discussion of security force operations.)

Section II. PASSAGE OF LINES

Description

The procedures in a passage of lines for a corps or division are basically the same as those for a maneuver brigade. A passage of lines is conducted to allow a moving unit to pass through a stationary unit. It can be conducted in offensive or defensive operations. A passage of lines is usually an implied task, not a primary mission. However, detailed planning and coordination are essential during a passage. This is because two separate units are temporarily concentrated in the same area and are vulnerable to enemy action.

The FS cells of both the passing and stationary forces must consider the fire support factors discussed below.

Control Measures

Control measures for a passage of lines are as follows:

- Location of passage points.
- Location of contact points.
- Recognition signals.
- Attack positions or assembly area (forward passage).
- Release points (rearward passage).
- Location of CS and CSS (rearward passage).

Transfer of Control

The commanders of the two forces decide when the transfer of control will be implemented. The transfer may be triggered by an event, but a specific time (H-hour) also could be used to effect the transfer of control. Commanders must recognize that the transfer of control impacts on fire support. For example, the FA tactical mission may be DS

on order to GS or GSR or GS, GSR, or R on order to DS. Responsibility for fire support coordination passes from the FSCOORD of one force to the FSCOORD of the other force at the time the force commanders change command and control.

Forward Passage of Lines

Fire planning considerations for a forward passage of lines are as follows:

- Obscure the enemy's forward observation of the passage.
- Plan fire on high-payoff targets; for example, enemy direct-fire systems, C^2, enemy fire support assets, and air defense targets.
- Plan fires to support the deception plan.
- Plan smoke to screen friendly movement through passage points.
- Plan fires to interdict enemy counterattacks and reinforcements in the area of passage.
- Mass indirect fires.
- Ensure the stationary force supports the close operation while the passing force indirect-fire assets complete the passage.
- Ensure counterfire is planned and controlled by the stationary force.
- Plan appropriate fire support coordinating measures as follows:
  - o Plan on-order CFL.
  - o Consider RFAs on passage points.
- Use AFSOs to cover flanks and dead spaces.
- Ensure passing force plans fires to support operations after the passage of lines.

Rearward Passage of Lines

Fire planning considerations for a rearward passage are as follows:

- Plan smoke to conceal movement through passage points.
- Plan massed fires to disengage forces.
- Plan fires to support obstacle ardor barrier plans.
- Plan fires to support the deception plan.
- Plan fire support coordinating measures as follows:
  - o RFAs at passage points.
  - o On-call CFLs.
- Ensure the stationary force Supports the close operation while the passing force indirect-fire assets complete the passage.
- Ensure counterfire is planned and controlled by the stationary force.
- Plan fires on presage points to be fired after friendly units have passed through. Consider FASCAM to close passage lanes.
- Ensure the stationary force plans fires to support operations after the passage of lines.

Positioning of Field Artillery

Considerations

The most critical positioning issue is obtaining positions for units short of the line of departure and the passage points. Land will be at a premium. Coordination must be done early with the in-place unit.

Forward Passage

The field artillery of the passing force should be infiltrated early from the rear assembly area to the designated primary positions to support the operation. These positions should be near the passage lanes but not so close that they interfere with the maneuver force movement. On a forward passage, position priority goes to the passing force. During the passage of lines, the passing force FS cell and CP collocate with

the stationary force FS cell and CP. Position areas forward of the passage points are selected on the basis of anticipated rate of movement of the maneuver forces and terrain availability. Also, they are selected away from passage points.

Rearward Passage

The field artillery of the stationary force should be positioned well forward to provide deep fires to support the withdrawal of the passing force. Again, these positions should be away from passage lanes. In the rearward passage, the stationary force has positioning priority. As the passing force artillery moves through, it should position behind the stationary artillery and move laterally away from the passage lanes.

Coordination

Close coordination of plans between the commanders and staffs of the involved forces is mandatory. Once the passage of lines is ordered, the FSCOORD of the passing force in a forward passage of lines should send a liaison section to the FSCOORD of the force in contact. In a rearward passage, the FSCOORD of the stationary force should send a liaison section to the FSCOORD of the passing force. FSCOORDs define and assign mutually agreed upon fire support responsibilities to facilitate the passing force. Information that the two FSCOORDs should share and areas that should be coordinated are shown below. The important point to remember is that each unit will be in the area of responsibility of another unit for a period of time and that detailed coordination is vital to ensure that each of the two units understands how the other operates. The units must do the following:

- Exchange unit SOPS and resolve differences in operating procedures.
- Exchange existing targets and fire plans.
- Provide status of unit target acquisition assets.
- Exchange attack guidance and casualty criteria.
- Exchange control measures in effect; for example, passage points, passage lanes, and contact points.
- Coordinate recognition signals.
- Provide information on obstacles and barriers.
- Coordinate position areas.
- Provide met information to passing force.
- Provide available survey control to passing force.
- Exchange SOIs and resolve communications differences; for example, frequencies, call signs, challenge and password, and secure settings.
- Coordinate security measures in effect.
- Exchange intelligence.
- Coordtiate subscriber table information.

Section III. ENCIRCLED FORCES

Description

Because of the nonlinear nature of today's modern battlefield, forward or rear forces may become encircled. Encirclement occurs when all the ground routes of evacuation and reinforcement for a unit are cut by the enemy. Forces face encirclement most often when enemy forces bypass defending units or when advancing units are cut off by an enemy counterattack.

It is important for the encircled force to continue its mission, establish communication

with higher headquarters, and act on its own initiative within the intent of the higher commander. The most likely course of action facing the encircled force is to try a breakout toward friendly forces and prepare for linkup operations.

Breakout Toward Friendly Forces

Breakout operations must be planned, organized, and executed before the enemy has time to react. Otherwise, the enemy force may be able to contain and destroy the encircled force. To achieve a breakout, the commander must do the following:

- Deceive the enemy as to the time and place of the breakout.
- Exploit gaps and weaknesses in the encircling force.
- Exploit darkness and limited visibility if possible.
- Organize the forces for breakout.
- Concentrate combat power at the breakout point.
- Coordinate supporting attacks.
- Provide for forces left behind.
- Prepare for linkup operations.

Fire Support Tasks

Fire support tasks in a breakout toward friendly forces are as follows:

- Reorganize available fire support.
- Concentrate firepower at the breakout point.
- Provide fires to support defense in other areas to delay or disrupt enemy attempts to attack.
- Consider the use of FASCAM in areas other than the breakout point or to help hold the shoulders of the breakout gap.
- Support the deception plan.
- Support forces left behind.

Allocation of Fire Support

Fire support must be extremely centralized for a breakout. This is to ensure the maximum amount of combat power is brought to bear at the breakout point. Commanders of encircled forces must seek to establish coordination with outside forces and gain allocations of their fire support.

Fire Support Planning and Coordination

The following must be considered in a breakout toward friendly troops:

- Plan fires to support the immediate defense and the breakout.
- Coordinate with fire support agencies outside the encircled force for additional fire support.
- Establish fire support coordinating measures. RFAs around encircled forces and RFLs between converging breakout and linkup forces should be considered. ACAs in the vicinity of the breakout point are necessary if CAS is used.
- Concentrate massed and continuous fires at the breakout point to open a gap for the rupture force.
- Ensure radar (Q-36 and Q-37) sectors of search and indirect fires cover 6,400 mils.
- Plan for the use of chemical or nuclear weapons if force attrition and the political situation favor their employment.
- Make use of EW to deceive the enemy as to the location of the breakout.
- Plane for linkup operations.

Linkup Operations

Linkup operations are conducted to join two friendly forces. The forces may be moving toward one another, or one may be stationary. Often, a linkup operation requires a passage of lines. When the linkup is made, the linkup force may join the stationary force or it may pass through or around and continue the attack.

The controlling headquarters of both forces establishes the command relationship between the two forces and the responsibilities for each. It also establishes the control measures to be used.

Forces that are linking up exchange as much information as is practical before an operation. They must consider the following:

- Fire support needed before, during, and after the linkup.
- Recognition signals and communications needs from both forces.
- Future operations following the linkup.

Fire support considerations in a linkup operation are as follows:

- Employ RFLs as required. Consider the use of on-order CFLs or RFAs.
- Ensure fire support personnel are continuously aware of the progress of the linkup forces.
- Ensure targets beyond the RFL are cleared by the controlling headquarters.
- Ensure smoke and illumination fires do not cause adverse effects on the other friendly forces.
- Ensure that fires keep the enemy force between the two friendly forces from escaping. Use of scatterable mines should be considered to block enemy withdrawal.
- Position indirect-fire weapons to allow them to mass fires at linkup points.
- Ensure positions afford easy access to routes to be used after the linkup.

Section IV. RIVER-CROSSING OPERATIONS

Description

Corps and divisions can be expected to conduct river crossings as part of offensive and defensive operations. Like the passage of lines, river crossings are usually implied tasks rather than primary missions. But large-unit river crossings involving corps and divisions present a number of challenges to be overcome, particularly in the area of fire support. The various phases of a river crossing are discussed below.

Advance to the River

This includes securing crossing sites and establishing control measures.

Assault Crossing

During this phase, forces develop crossing sites, emplace crossing means, and control unit movement into and away from the crossing area. Defensible terrain on the exit bank is secured. Follow-up forces provide overwatch and security and follow-and-support assistance to the assault force.

Advance From the Exit Bank

Assault forces continue to attack from the exit bank. Support forces help secure objectives. This may include a hasty or deliberate attack from the exit bank.

Securing the Bridgehead

During this phase, CSS elements must sustain the assault and the subsequent advance to the bridgehead.

Fire Support

Fire support considerations in a river crossing areas follows:

- Make fires immediately available to crossing forces. If necessary, have GS artillery fire while DS artillery is crossing.
- Assign priority of fires to assault forces.
- Assign nonstandard missions to GS units. Change the priority of calls for fire, fire planning, and other inherent responsibilities as necessary.
- Plan smoke and suppression fires in greater than normal amounts if necessary.
- Use smoke to screen both actual and dummy crossing sites.
- Use smoke to obscure enemy direct-fire positions in the bridgehead area until the crossing forces can engage them.
- Suppress enemy forces in the bridgehead area until the assault force can provide its own suppressive fires.
- Use all available targeting assets to develop targets in the bridgehead area.
- Have indirect-fire weapons cross the river with the forces they support.
- Plan to take advantage of the visibility conditions that will prevail during the crossing or that can be produced to help support the crossing.
- Consider that the width of the crossing area affects the planning. The amount of time necessary to cross a river, hence the vulnerability of the crossing force, affects the types and volume of fires requested.

Fire Planning

Fire planning considerations for a river-crossing operation are as follows:

- Plan fires to soften enemy defense and crossing sites and to seal- off exit bank positions.
- Plan fires to facilitate the assault force securing the exit bank.
- Plan preparations, groups, and/or series to support the operation as the assault force secures the bridgehead.
- Plan and use on-order fire support coordinating measures.
- Plan fires at depth to isolate the bridgehead area from enemy reinforcement.
- Plan smoke to obscure actual and dummy crossing sites and to screen friendly movements. Consider the use of smoke generators.
- Use CAS to expand the bridgehead.

Section V. HEAVY AND LIGHT FORCES MIX

Employment

Fire support principles of planning and coordination do not change for a heavy and light mix of forces in a mid- to high-intensity conflict.

Fire Support Planning and Consideration

Medium and heavy artillery and target acquisition assets may be required to enable the light division to engage deep targets and execute counterfire missions. Corps artillery units reinforcing a light division artillery is an option to be considered. For logistical reasons, attachment of FA units is not usually an option.

Medium and heavy artillery, support may be required to enable the light division to employ a greater array of ammunition; for example, DPICM, FASCAM, and nuclear munitions.

The relative lack of combat power in light divisions may require greater allocations of fire support assets. CAS, Army aviation, and naval gunfire should be considered for the light division before the heavy divisions in a heavy and light mix.

Operations against a technically sophisticated enemy may require additional intelligence assets. Therefore, corps IEW assets could be placed in direct support of the light division.

APPENDIX A

ORGANIZATIONS AND DUTIES

This appendix presents organizations and duties as follows:

- *Corps and division organizations.*
- *Fire support cell organizations.*
- *Duties of fire support personnel.*

Section I. CORPS AND DIVISION ORGANIZATIONS

Organizations of the following corps and divisions are shown in illustrations in this section:

- US Army corps.
- Armored division.
- Mechanized division.
- Motorized infantry division.
- Light infantry division.
- Air assault division.
- Airborne division.

LEGEND FOR ORGANIZATION GRAPHICS

AASLT = air assault
ABN = airborne
AHB = attack helicopter battalion
AMMO = ammunition
ARMD CAV = armored cavalry
ASB = aviation support battalion
ATK HEL = attack helicopter
CA = civil affairs
CAAB = cavalry air assault brigade
CAB = combined arms battalion
CAC = combat aviation company
CAV = cavalry
CBT = combat
CML = chemical
CSAB = command service support assault battalion
DISCOM = division support command
FIN = finance
FSB = forward support battalion
GSAC = general support aviation company
GS-LAR = general support-light artillery and rocket
H = heavy
HHC = headquarters and headquarters company
HHT = headquarters and headquarters troop
INF = infantry
L = light
LAB = light assault battalion
MAINT = maintenance
MCC = movement control center
MECH = mechanized
MED = medical
MSB = main support battalion
PSS = personnel services section
PSYOP = psychological operations
SIG = signal
SP = self-propelled
SPT = support
SQDN = squadron
SUP = supply
T = towed
TAB = target acquisition battery
TAMCA = theater army movement control agency
TRANS = transportation

US ARMY CORPS ORGANIZATION

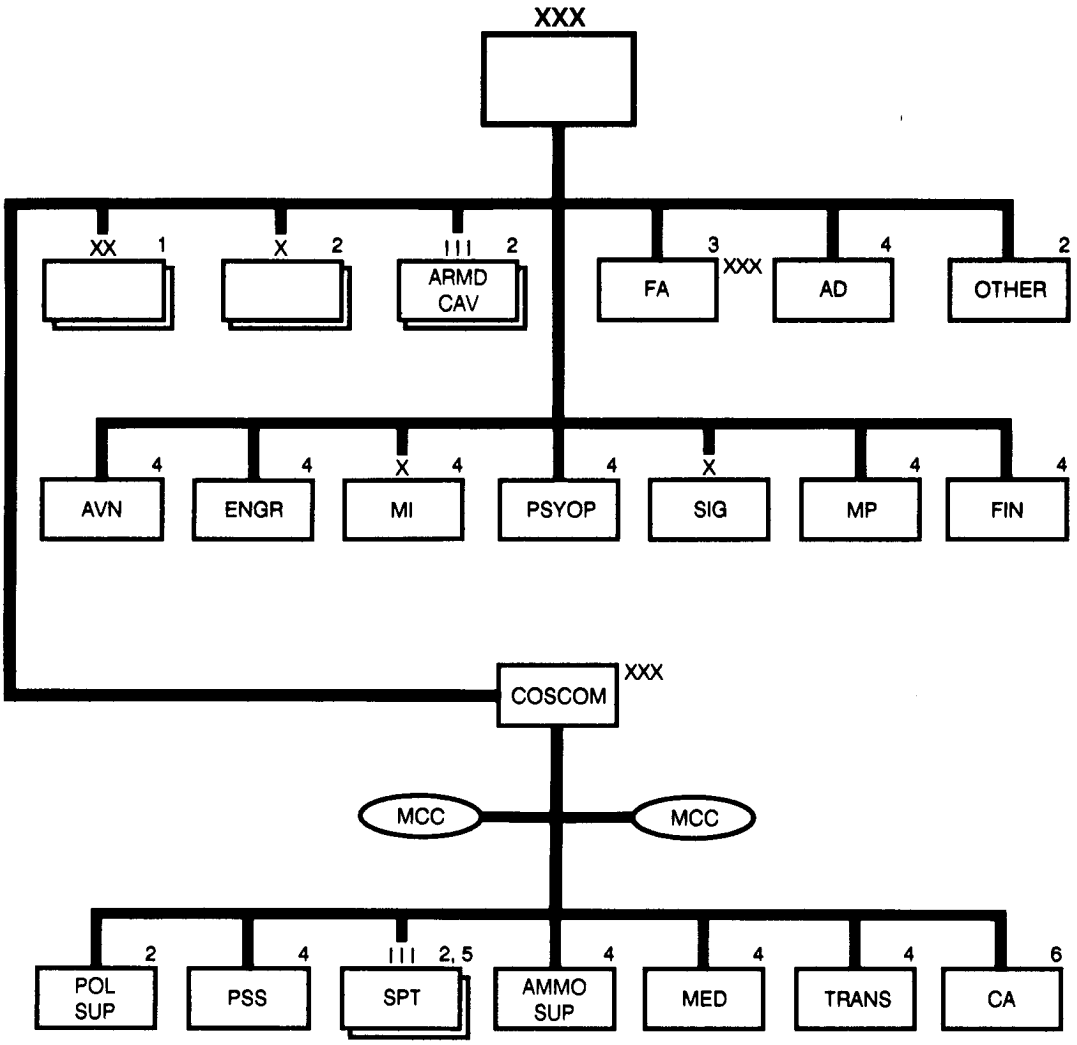

[1]Two to five.

[2]Numbers and types of units vary with requirements.

[3]One or more FA brigade HHBs with attached FA battalions.

[4]The size of the command and control headquarters depends on the scope and magnitude of its mission, to include the number of subordinate units assigned.

[5]Provides DS supply and maintenance to nondivisional units and G3 supply and maintenance in support of the entire corps.

[6]May be assigned to corps headquarters or COSCOM.

NOTE: When performing combat service support missions, combat support units may be attached to either corps headquarters or COSCOM, depending on mission requirements and other considerations.

ARMORED DIVISION ORGANIZATION

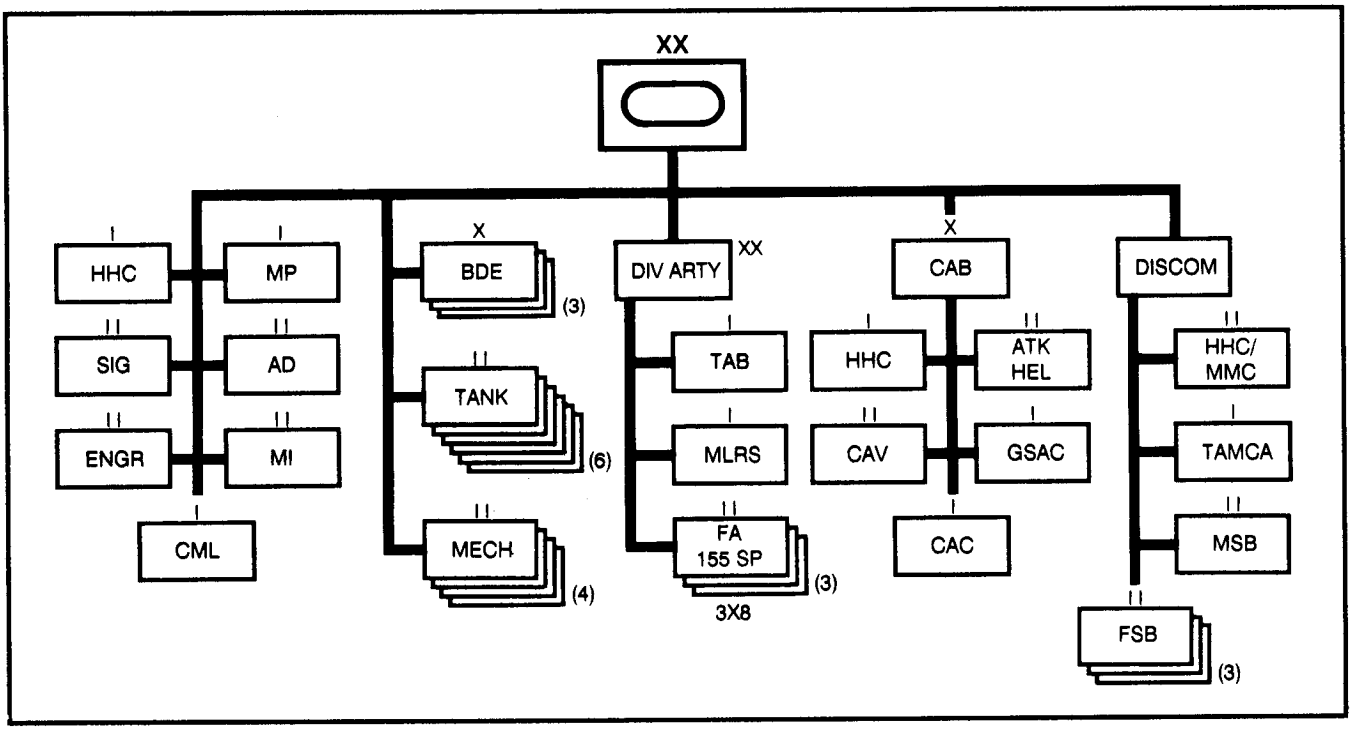

MECHANIZED DIVISION ORGANIZATION

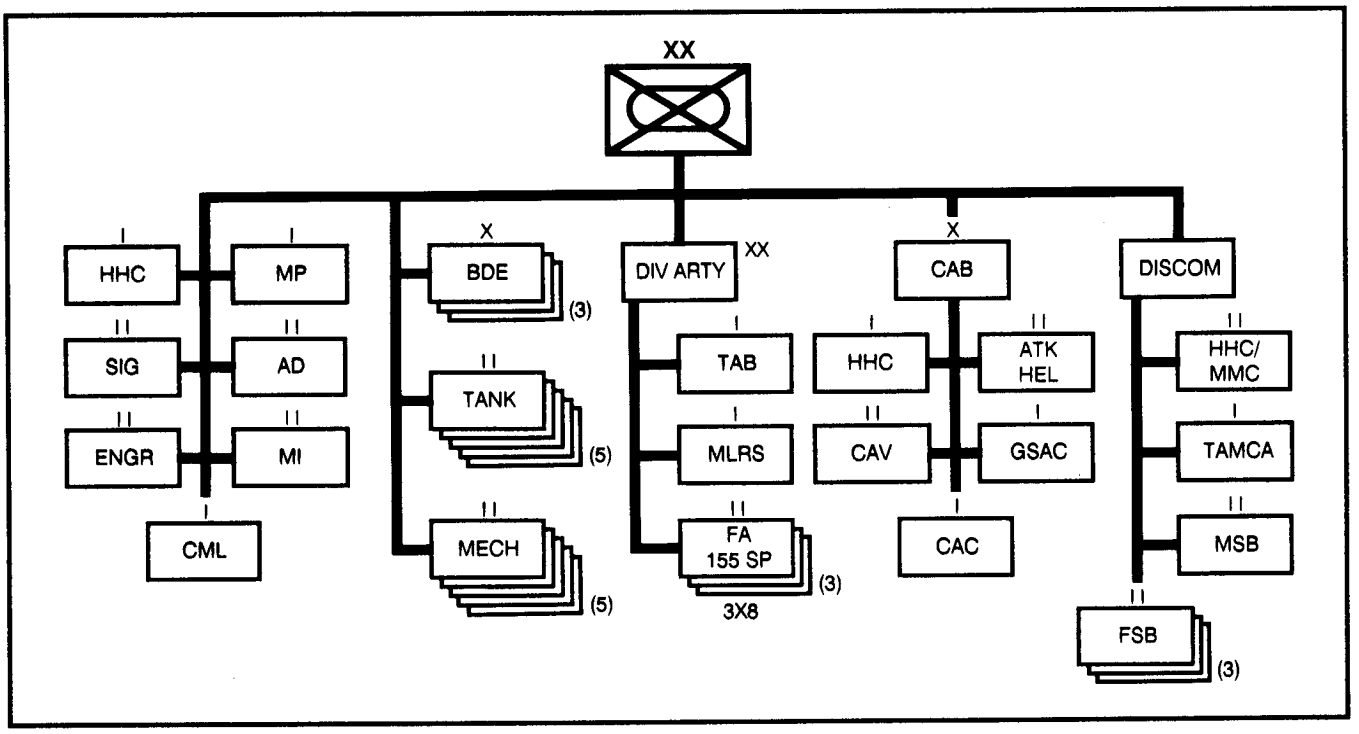

MOTORIZED INFANTRY DIVISION ORGANIZATION

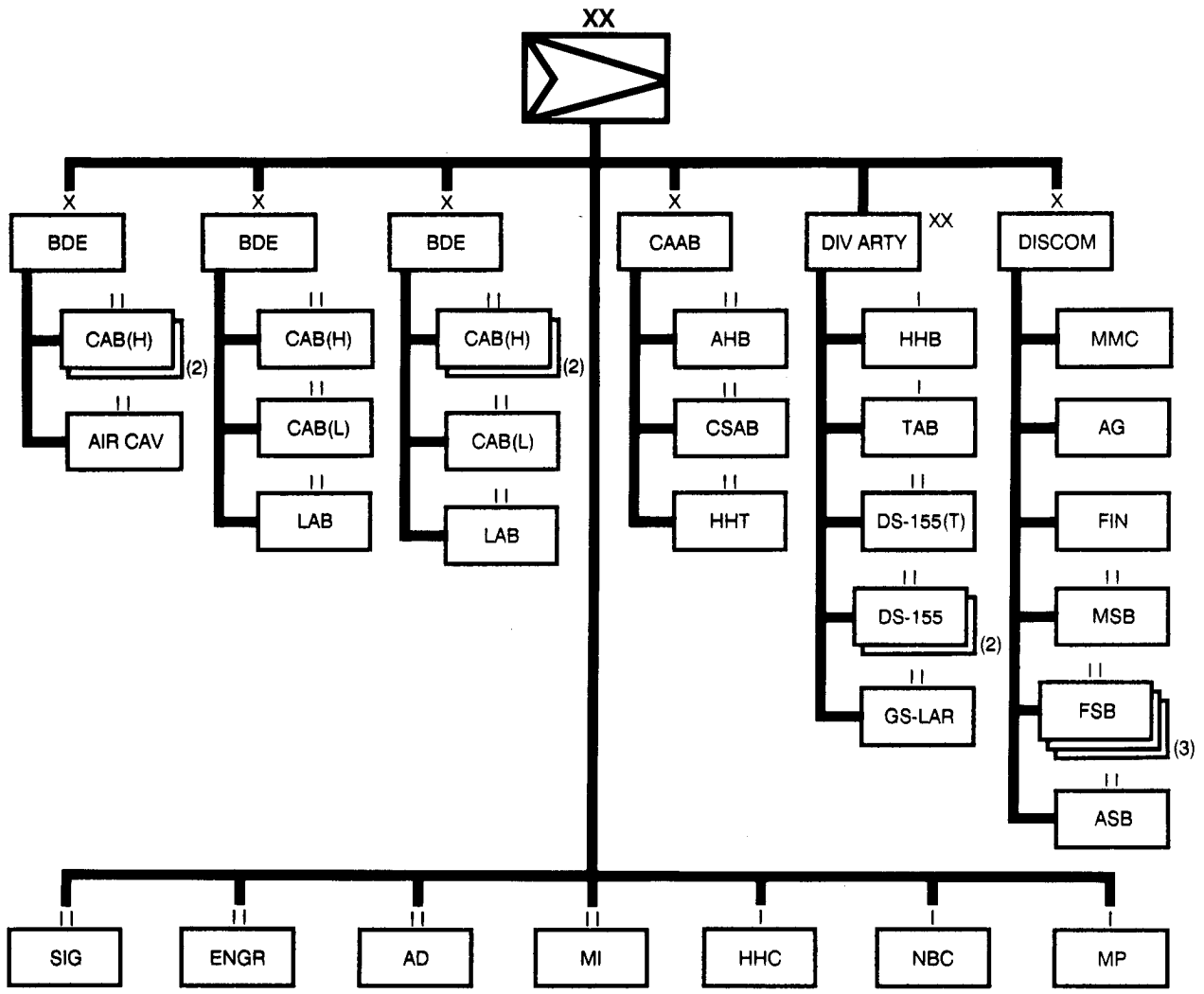

NOTES:

1. The motorized division has evolved from the H-series infantry division to its current organization.
2. The organizational and technological changes in the motorized division improve its capability to quickly deploy by strategic movement with a first-in antiarmor capability.
3. Organizations unique to the motorized division include the following:
   - Addition of two combined arms battalions that are built around the motorized infantry rifle company. The motorized infantry rifle company employs the high-mobility multipurpose wheeled vehicle (HMMWV) equipped with the tube-launched, optically-tracked, wire-guided missile (TOW) or the MK19 40-mm grenade machine gun.
   - Ground maneuver battalions structured as CABs, five heavy and two light. The heavy battalion consists of one motorized infantry rifle company and two assault gun companies, while the light battalion has two motorized infantry rifle companies and one assault gun company.
   - A cavalry brigade (air attack) specifically structured to fight as a fourth maneuver brigade.
   - Restructure of the DISCOM into main and forward support battalions to provide dedicated CSS to each of the four maneuver brigades.

LIGHT INFANTRY DIVISION ORGANIZATION

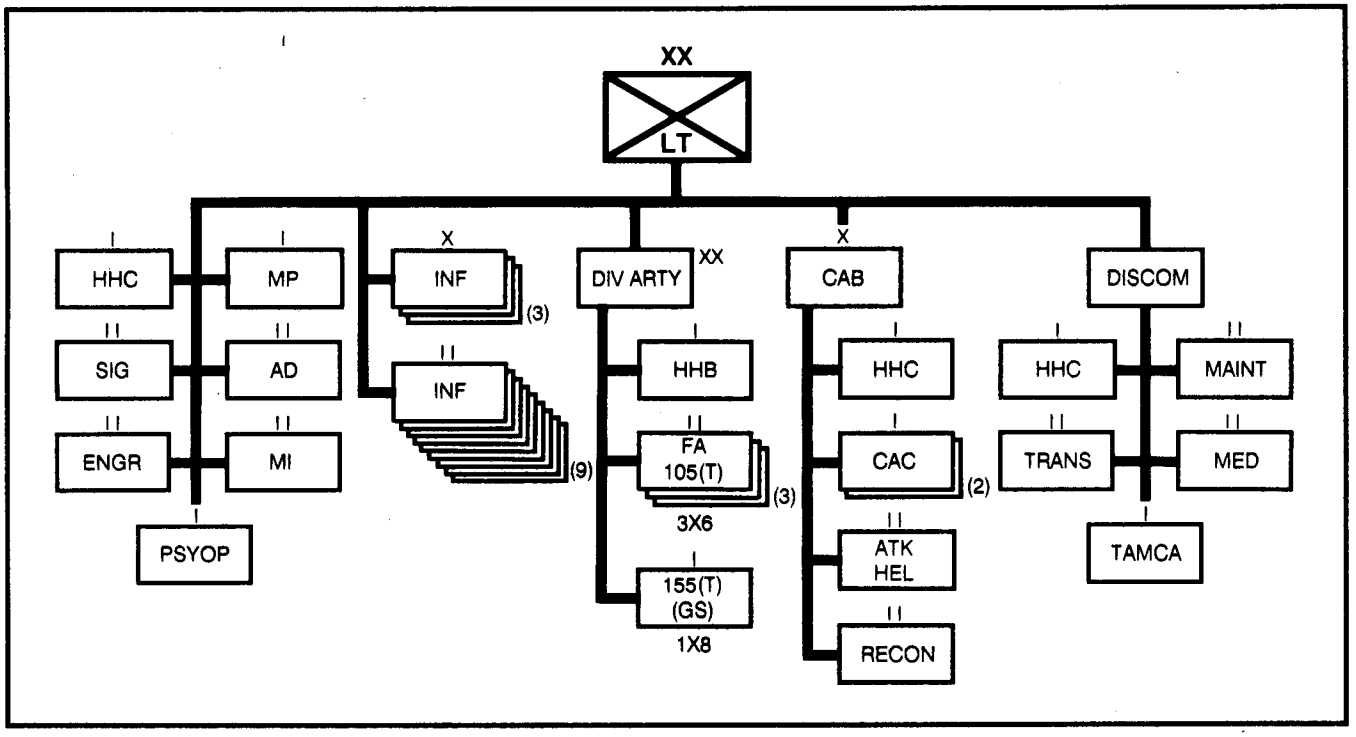

AIR ASSAULT DIVISION ORGANIZATION

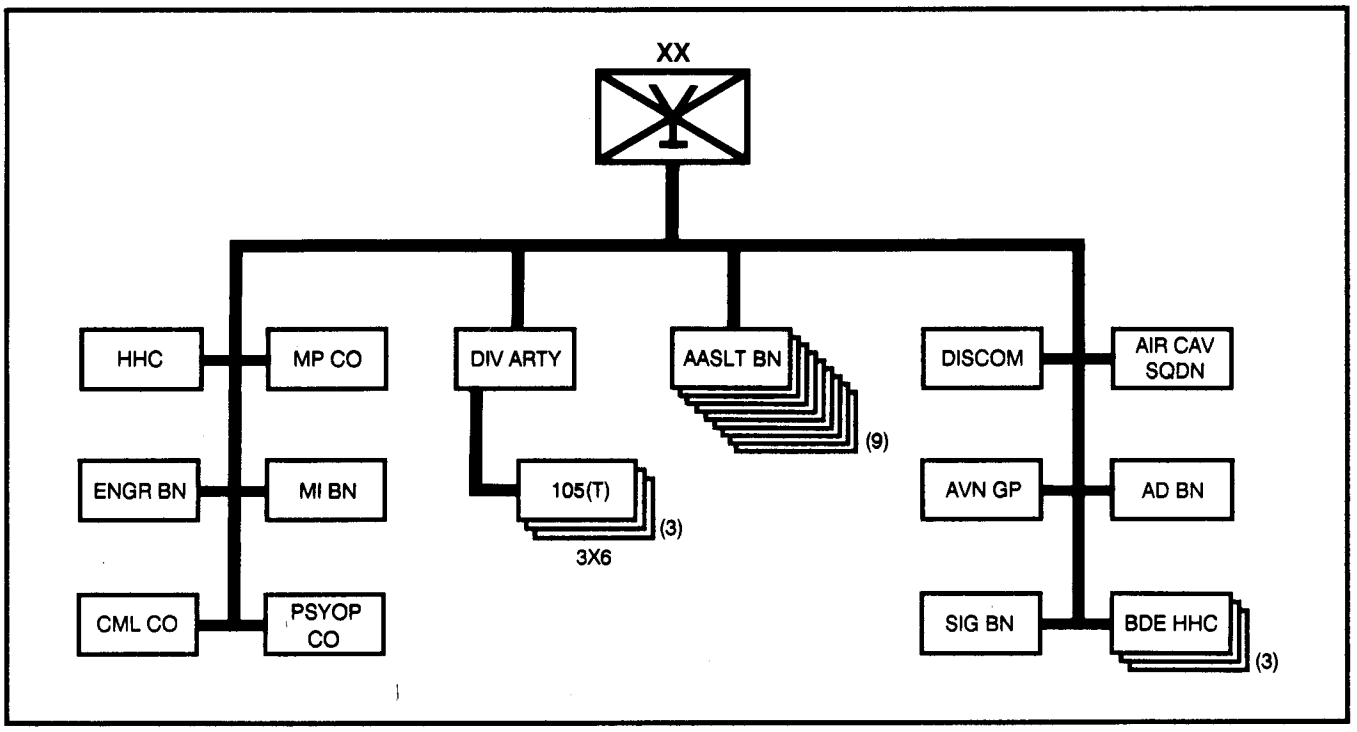

AIRBORNE DIVISION ORGANIZATION

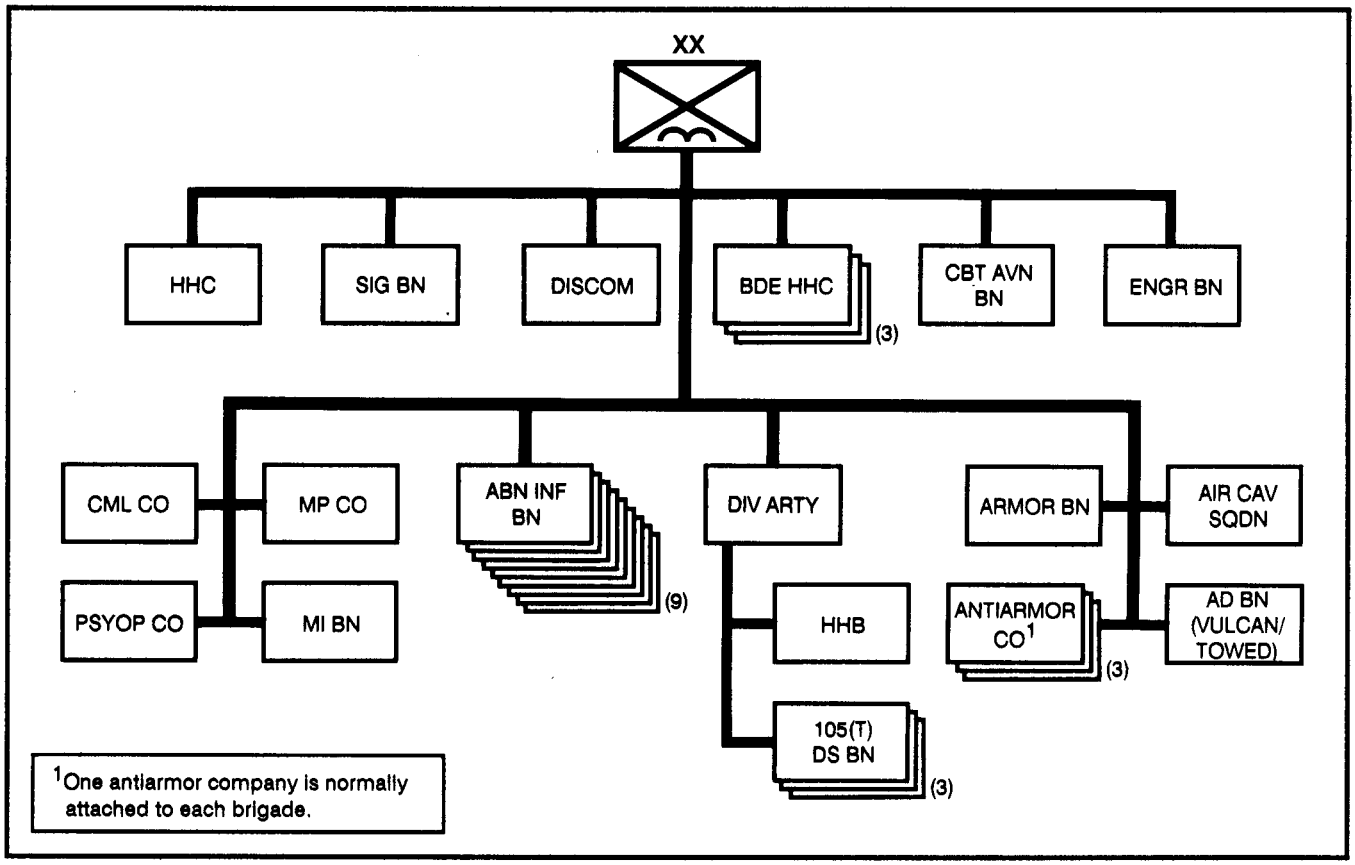

Section II. FIRE SUPPORT CELL ORGANIZATIONS

Fire Support Cell

Division command posts are divided into a tactical CP, a main CP, and a rear CP. Like the command cell, current operations cell, plans cell, CSS cell, and all-source intelligence center (ASIC), the FS cell operates at the main CP. The field artillery representatives, who comprise the fire support element, form the nucleus of the FS cell. Other personnel who may either work in the FS cell habitually or actively coordinate with it as needed are the G2, G3 air, assistant division engineer, chemical officer, EW officer, and representatives from the TACP, AD, division aviation and ANGLICO. The FSCOORD, or AFSCOORD in his absence, supervises FS

cell activities. These include planning, coordinating, and integrating fire support operations, to include TACAIR and EW support.

Detailed breakdowns of the CP organizations are in FM 71-100. The table below shows the FSE personnel authorized for different types of divisions.

TYPE DIVISION FIRE SUPPORT ELEMENT

PERSONNEL	RANK	HEAVY DIVISION	LIGHT INFANTRY DIVISION	AIRBORNE DIVISION	AIR ASSAULT DIVISION	MOTORIZED INFANTRY DIVISION	NOTIONAL BREAKDOWN OF ASSETS (HEAVY DIVISION ONLY)		
							TACTICAL	MAIN	REAR[1]
FSCOORD	COL	1	1	1	1	1			
Deputy FSCOORD	LTC	1	1	1	1	1		1	
Assistant FSCOORD	MAJ	4	2	2	2	4	2	2	
FAIO	MAJ	1	1	1	1	1		1	
FAIO	CPT	1	1	1	1	1		1	
Fire Support Officer	MAJ								1
Target Analyst	CPT	2	2	2	2	2	1	1	
Intelligence Sergeant	MSG	1				1		1	
Operations Sergeant	MSG	1	1	1	1	1		1	
Fire Support Sergeant	SFC	1	1	1	1		1		
Fire Support Sergeant	SSG	2	1	2	2		1	1	2
Fire Support Sergeant	SGT	1	1	1	1			1	
Radio Team Chief	SGT					2			
Clerk-Typist	SPC	2				1	1	1	
Fire Support Specialist	SPC	3	1	2	2	2	1	2	
RATT Operator	SPC					2			
RATT Operator	PFC					2			
	TOTAL	21	13	15	15	21	7	13	3

[1]Proposed addition to TOE for division rear CP.

Division Tactical Command Post Fire Support Element

The tactical CP FSE is responsible for fire support coordination for the current battle. It is an austere organization. It coordinates and implements the fire support from the subordinate brigade FS cells and identifies fire support requirements for the immediate and near-immediate tactical situations. Representatives from all fire support resources responsive to the division collocate with the FSE. The FSE is as mobile as the supported maneuver force tactical CP.

Organization

There is no standard organization for the tactical CP FSE. The table on page A-7 shows a possible division of FA personnel between the tactical CP and the main FS cell in a heavy division. The figures below show type layouts of tactical CP FSEs in heavy and light divisions. The heavy division FSE is in an M577 command post carrier. The light division FSE is in an HMMWV. Each vehicle should be located near the G3's vehicle for easy coordination and flow of information.

Communications

Normally, the tactical CP FSE operates in the following TACFIRE and non-TACFIRE nets:

- Div arty command/intelligence net (FM-voice) or division command net (FM-voice).
- Div arty fire direction net (FM-voice) or div arty operations net 1, 2, or 3 (FM-digital).
- Div arty command/fire direction net 2 (SSB-RATT).
- Command multichannel link to the main CP FS cell and div arty CP when available.

TYPE LAYOUT, HEAVY DIVISION TACTICAL CP FSE

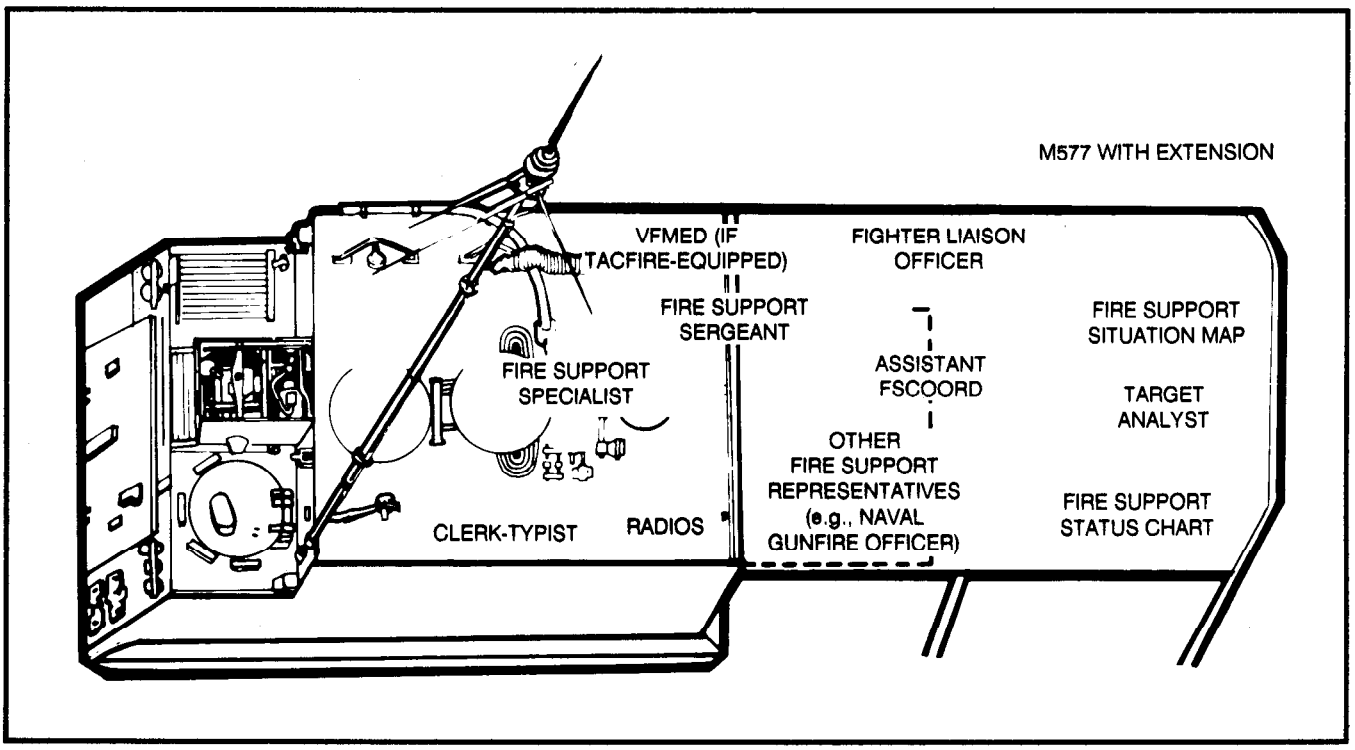

TYPE LAYOUT, LIGHT DIVISION TACTICAL CP FSE

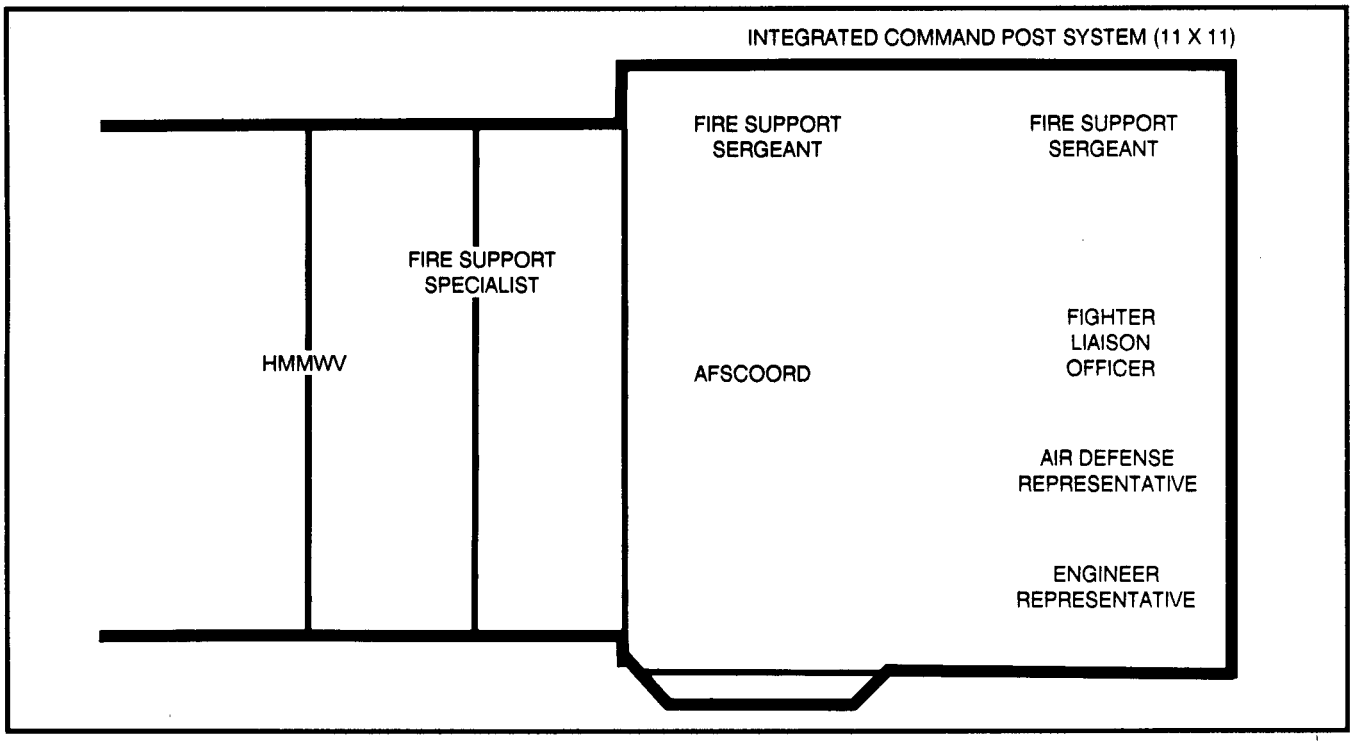

Division Main Command Post Fire Support Cell

The main FS cell is collocated with the division main CP. It is responsible for production of the fire support portions of the division operation plans and orders. It augments the capabilities of the tactical FSE, when required. It is the focal point for planning the fire support portion of the operation plan (OPLAN) for extended operations.

Organization

There is no standard organization for the main CP FS cell. The table on page A-7 shows a notional division of personnel between the tactical CP and main CP FS cells in the heavy division. The figures below show type layouts of a heavy division main CP FS cell in an expansible van and a light division main CP FS cell in a HMMWV.

TYPE LAYOUT, HEAVY DIVISION MAIN CP FS CELL

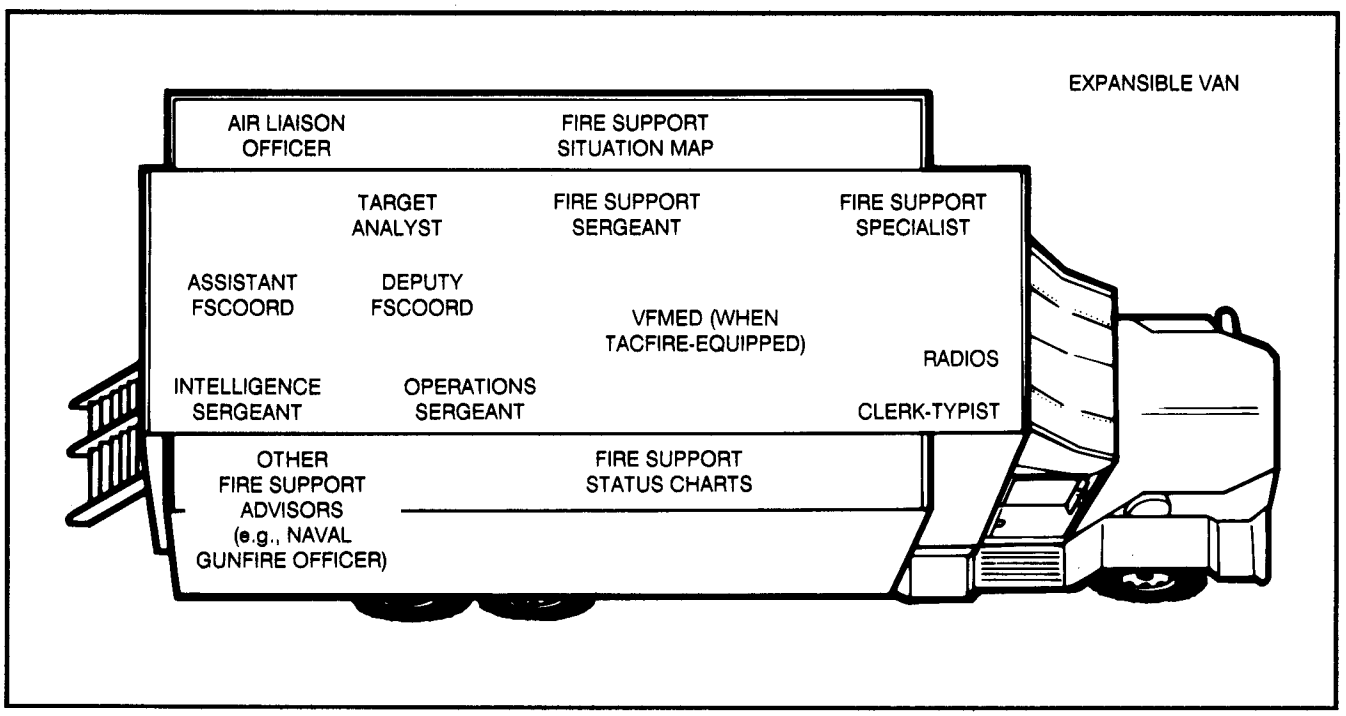

TYPE LAYOUT, LIGHT DIVISION MAIN CP FS CELL

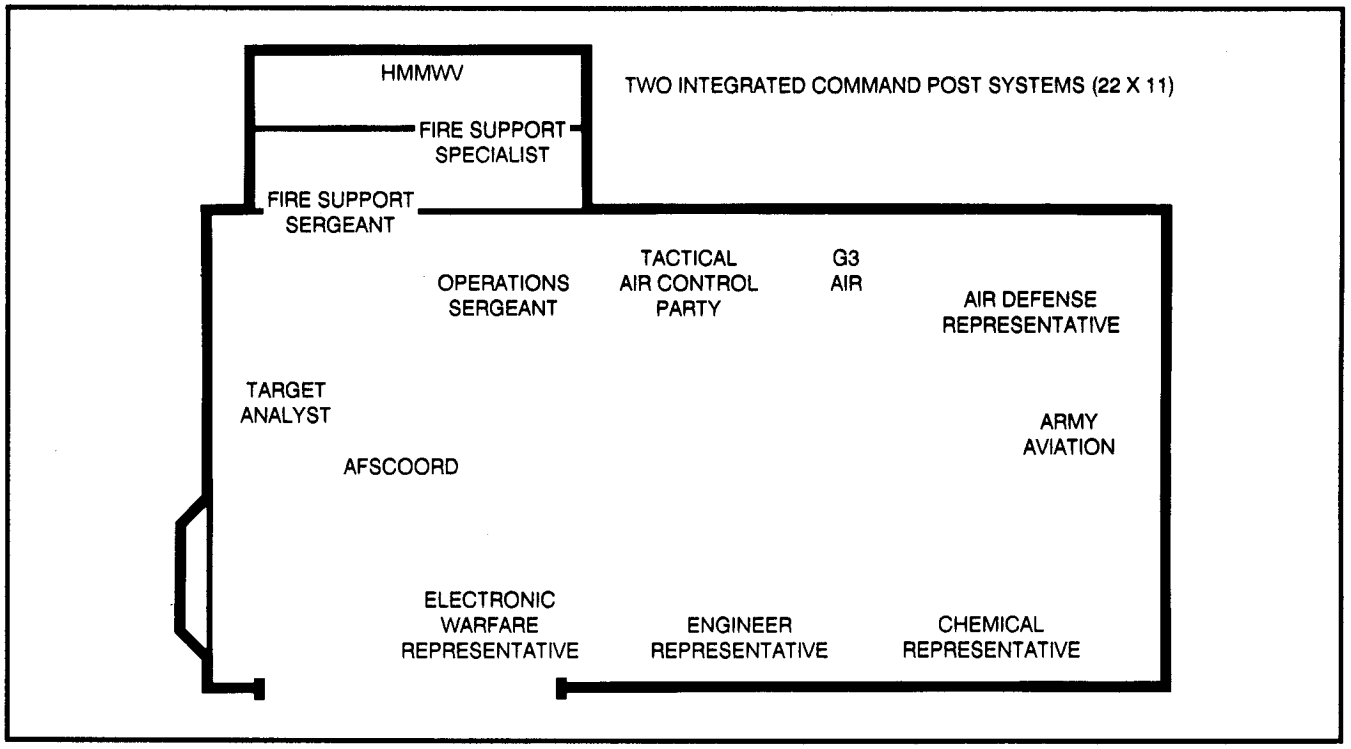

In addition to the operations and plans cells, the FS cell works closely with the A^2C^2 element. The A^2C^2 element manages airspace over the division sector with emphasis on the area between the brigade rear boundaries and the division rear boundary. It helps the tactical FS cell coordinate those activities associated with current combat operations but beyond the capabilities of the tactical CP FSE. The FS cell must keep the A^2C^2 element informed and must coordinate fire support use of airspace for planned operations.

Battle Coordination Functions

Both the division and corps commanders synchronize close, deep, and rear operations through a coordinated effort at the main CP. To help them in this function, specific staff elements are tasked to gather and provide information to the commander as required.

Battle coordination functions may include the following:

- Acquire and identify high-payoff targets.
- Assess attacks.
- Adjust assets.
- Change battle plans.
- React quickly to high-priority targets.

Specific requirements for FS cell representatives may include the following functions:

- Recommend targets.
- Use target value analysis to identify target priorities.
- Determine fire support needs.
- Expedite fire support.
- Assess fire support effects.
- Coordinate timing of fire support attacks (to include EW).
- Recommend use of TACAIR assets.

Communications

Normally, the main CP FSE operates in the following TACFIRE and non-TACFIRE nets:

- Div arty command/intelligence net (FM-voice) or div arty command net (FM).
- Div arty fire direction net (FM-voice) or the designated div arty operations net 1, 2, or 3 (FM-digital). The radio identified for this use may be used to operate in the division command/operations net.
- Div arty command/fire direction net 2 (SSB-RATT).
- Multichannel link to the tactical CP FSE and div arty CP when available.

The FSE uses the VFMED to access the div arty TACFIRE computer to process data for the FSE program. This is done on a time-shared basis with other div arty programs and users.

The FS cell operates within the guidance and policies established by the division commander to direct the use of the fire support resources available to the division.

Division Rear Command Post Fire Support Element

The division rear CP coordinates sustainment of current operations, plans for future operations, terrain management of all units currently residing or moving into the division rear, and base cluster security plans and rear operations. The rear CP FSE, one fire support officer and two fire support sergeants, operates in the rear operations cell. These individuals are reflected on the division rear tactical operations center (TOC) TOE (standard requirement code [SRC] 87103L000). Rear CP manning will come from the US Army Reserve Component.

Corps Fire Support Cell

The corps commander, like the division commander, organizes tactical, main and rear CPs. The table below shows a possible distribution of field artillery personnel in the corps fire support element.

CORPS FIRE SUPPORT ELEMENT

		NOTIONAL BREAKDOWN OF ASSETS		
TITLE	RANK	TACTICAL	MAIN	REAR[1]
Corps Arty Commander	BG		1	
Deputy Corps Arty Commander	COL	1		
Deputy FSCOORD	LTC		1	
Assistant FSCOORD	MAJ	2	2	
Fire Support Officer	MAJ	1	1	
FA Intelligence Officer	MAJ		1	
FA Intelligence Officer	CPT		2	
FA Operations Officer	CPT	2	2	
Fire Support Officer	CPT			1
Target Analyst	CPT		2	
Operations Sergeant	SGM		1	
Intelligence Sergeant	MSG		1	
Fire Support Sergeant	SFC	1		1
Fire Support Sergeant	SSG	1		
Target Processing Specialist	SGT	1	1	
Target Processing Specialist	SPC	2	3	
Clerk-Typist	SPC		1	
Fire Support Specialist	PFC			1
	TOTAL	11	19	3

[1]Proposed TOE addition.

Corps Tactical Command Post Fire Support Element

Because of the organization of the corps FS cell the manning of the tactical CP FSE must be minimal. The figure below shows a type layout of a corps tactical CP FSE. The M577 shown must be provided by the corps headquarters and headquarters company (HHC), or it may be organic to the corps artillery headquarters battery. The VFMED authorized for the tactical CP FSE may be mounted either in the M881 1 1/2-ton vehicle organic to the fire support element or in the M577.

The tactical CP FSE can communicate with the corps artillery CP over an FM net. They use the RATT (SSB) capability deployed with the corps CP for communication with the main FS cell, when necessary. They also use multichannel communication, to include multiple subscriber equipment, if available, to communicate with the main CP FS cell.

TYPE LAYOUT, CORPS TACTICAL CP FSE

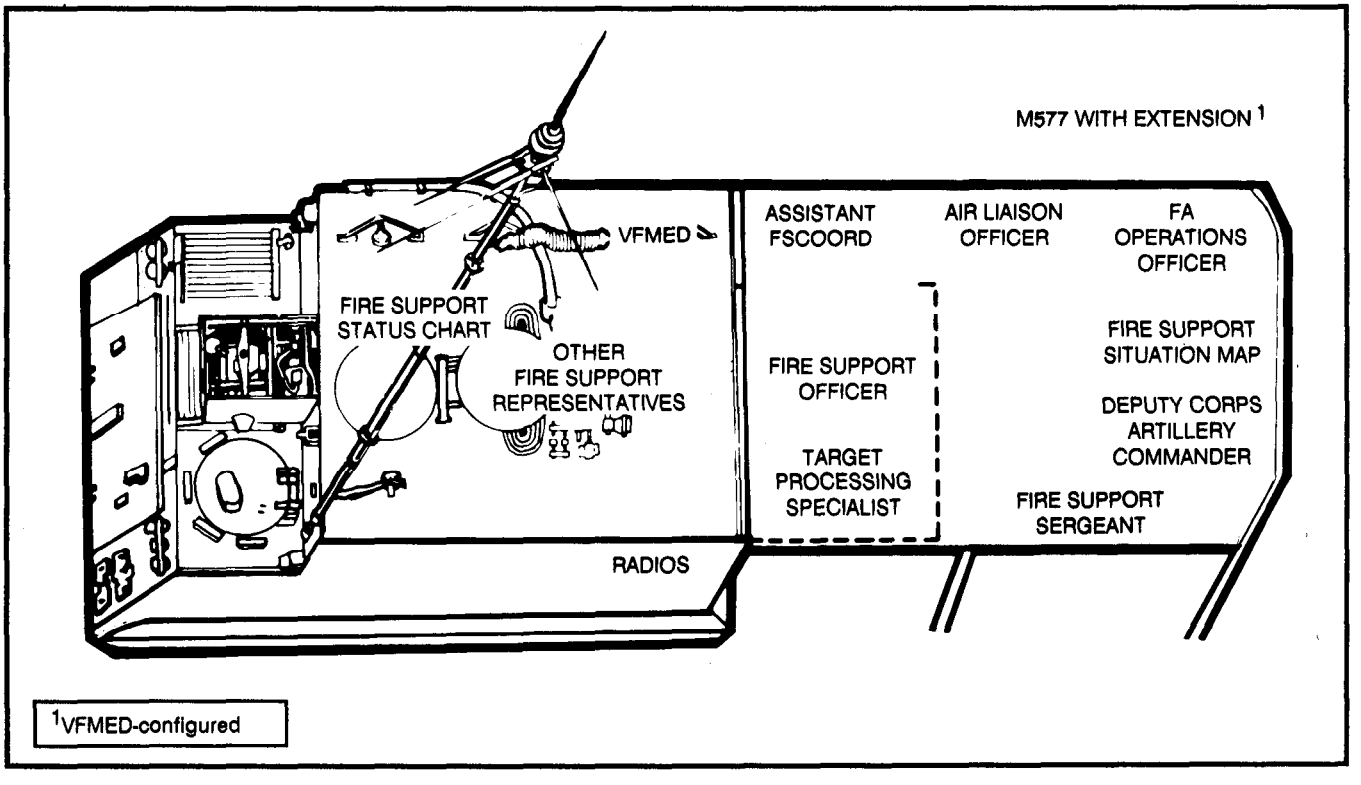

Corps Main Command Post Fire Support Cell

The main FS cell is collocated with the corps main CP and must be close to the G2 and G3 elements to be effective in fire support planning. The main FS cell is concerned primarily with planning future operations and with fighting deep operations. The figure below shows a type layout for the corps main CP FS cell.

Battle Coordination Functions

The FS cell members serve with the corps staff in targeting efforts similar to those described earlier for the division level. The Lance liaison element is usually located at the main FS cell.

Communications

The primary means of communication for the main FS cell is the corps common-user multichannel system. This provides secure access to all coordinating elements. Also, the main FS cell has an AN/VRC-46 radio set. This radio is used for FM communication with the corps artillery commander and the tactical CP when it is within radio range. The available communications means are discussed below.

Corps Artillery Command/Fire Direction Net (SSB-RATT). The main FS cell communicates over the corps artillery CF net (SSB-RATT) to coordinate nuclear fire support and to link the FS cell with field artillery retained under corps control.

Corps Artillery Command/Operations Net (SSB-Voice). The Lance battalion commander and operations element operate in this net with the corps artillery HHB operations/intelligence section. The net is used for tactical and administrative control; for coordinating and requesting fire support; and for collecting, exchanging, and disseminating intelligence information.

TYPE LAYOUT, CORPS MAIN CP FS CELL

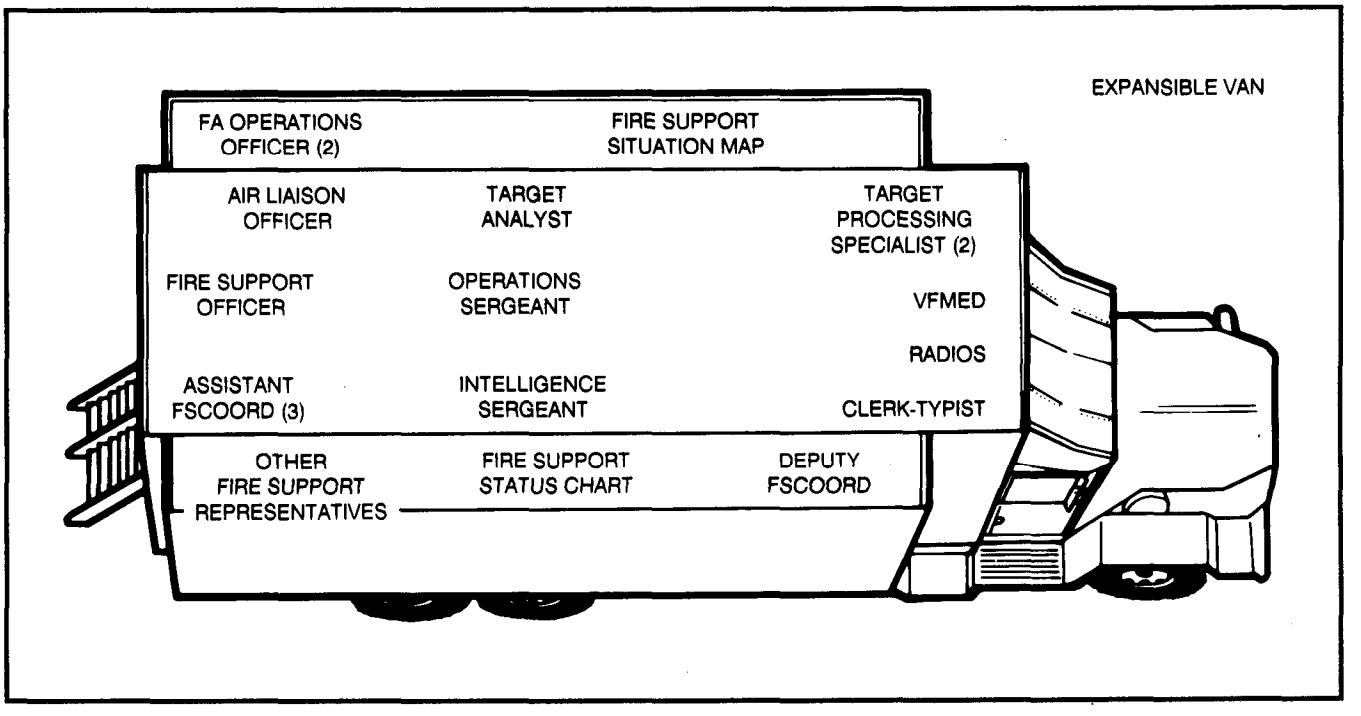

communications. Detailed coordination with the division signal officer (DSO) is still a must.

Fire Support Cell Automation. The capabilities of the corps artillery TACFIRE are similar to those of the TACFIRE at division level. The corps FS cell is the focal point for preparation of the nuclear package. The VFMED in the main FS cell is an excellent tool for preparing interdiction attack options to support interdiction planning. Targets may be developed in the corps main CP or submitted by subordinate units as requests for additional fire support. The main FS cell uses the preliminary target analysis program to identify appropriate attack resources to engage these targets.

Corps Rear Command Post Fire Support Element

The rear CP conducts rear operations. This function entails command and control of rear security operations, terrain management within the corps rear area, sustainment, control of administrative moves, and other associated functions. The rear CP FSE—one FA captain, a fire support sergeant, and a driver—operates from the rear operations cell. These individuals are reflected on the corps rear TOC TOE (SRC 52403L000). Rear CP manning will come from the US Army Reserve Component.

Section III. DUTIES AND RESPONSIBILITIES OF FIRE SUPPORT PERSONNEL

Fire Support Coordinator

The field artillery commander at corps or division is designated the FSCOORD. He is the force commander's primary advisor on fire support matters. He maintains a good working relationship with the commander. operations officer (G3), and ALO throughout the planning and execution phases of the operation. The FSCOORD must be thoroughly familiar with the battle plan so that he can anticipate missions, situations, and changes and then advise the force commander on the best use of fire support. The FSCOORD's primary responsibilities (at corps or division level) are as follows:

- Establish and supervise the activities of the FS cell.

- Plan and synchronize fire support.
- Prepare the fire support portion of the corps or division operation plans and orders.
- Advise and inform on all fire support missions.

The FSCOORD cannot always be physically present in the supported unit CP because of his responsibility to command the organic field artillery. Still, he must approach his fire support responsibilities with the same intensity that he approaches his field artillery responsibilities. Therefore, the FSCOORD has a full-time representative in the FS cell. This individual is the deputy FSCOORD (DFSCOORD). The DFSCOORD is the permanent supervisor of FS cell activities in the FSCOORD'S absence.

Corps Deputy Fire Support Coordinator

The corps FSE is organized with the deputy corps artillery commander serving as the DFSCOORD and enough assistant FSCOORDs (AFSCOORDs) to work in the tactical and main CPs on a shift basis. Each division is organized with the DFSCOORD (05) and enough AFSCOORDs to work two shifts in the main and tactical CPs.

The duties of the corps DFSCOORD are as follows:

- Supervise the operation of either the main FS cell or the tactical CP fire support element.
- Recommend fire support coordinating measures to the corps commander or his representative as the battle progresses.
- Keep close contact with the main FS cell or tactical CP fire support element to keep them informed of current operations and the immediate fire support needs of the forces.
- Recommend changes to the field artillery organization for combat as necessary to support current and future operations.

Fire Support Officer, Corps Tactical Command Post

The duties of the FSO at the tactical CP are as follows:

- Maintain the current status and capabilities of available fire support resources.
- Supervise the FSE operations in the absence of the AFSCOORD.
- Maintain the fire support situation map.

Assistant Fire Support Coordinator, Corps Main Command Post

The duties of the AFSCOORD in the FS cell in the corps main CP are as follows:

- Supervise the operations of the main CP FS cell.
- Control and supervise toxic chemical and nuclear weapons package planning and employment within the corps.
- Refine nuclear aimpoints in the corps package.
- Recommend the use of fire support coordinating measures after coordination with the air liaison officer.
- Supervise preparation of the fire support plan for future operations.
- Resolve conflicts and duplications among the various fire support systems.
- Advise fire support liaison representatives present.
- Coordinate fire support for deep operations.

Fire Support Officer, Corps Main Command Post

The AFSCOORD is assisted by the FSO in the corps main CP FS cell. The duties of the FSO are as follows:

- Maintain the current status and capabilities of all fire support resources available to the corps.
- Maintain the fire support situation map.
- Develop the fire support plan for future operations.
- In conjunction with the G2 air, the G3 air, and the air liaison officer, formulate the SEAD plan for the corps.
- Perform the duties of the AFSCOORD in his absence.

Field Artillery Plans Officer and Fire Support Sergeant, Operations Cell, Corps Rear Command Post

The FA plans officer and fire support sergeant represent the FSCOORD at the corps rear CP. Their duties are as follows:

- Collate base, base cluster, and response force fire support plans received from subordinate rear area operations centers into a composite rear operations fire support plan.
- Integrate fire support provided by territorial forces into the rear operations fire support plan.
- Coordinate the rear operations fire support plan with the corps FSCOORD and the TCF.
- Coordinate with the FS cell at the main CP for fire support for response forces.
- Coordinate fires in support of response forces and the TCF.
- Review requests for CAS from response forces or the TCF, and forward the request to the FS cell at the main CP.

Division Deputy FSCOORD, Division Fire Support Cell

The duties of the division deputy FSCOORD are as follows:

- Serve as the full-time representative of the FSCOORD to the force commander and his staff.
- Position himself where he can provide the greatest assistance (in either the tactical or main CP).
- Help integrate fire support into the battle plan.
- Supervise the tactical FSE and the main FS cell.
- Recommend allocation of fire support and field artillery organization for combat.
- Recommend fire support coordinating measures.
- Advise the division commander and his staff on fire support matters.

Division AFSCOORD

The duties of the division AFSCOORD are as follows:

- Serve as the fill-time representative of the FSCOORD in the main FS cell or the tactical CP fire support element.
- Supervise the operation of the main FS cell.
- Plan and coordinate all means of fire support.
- Advise the maneuver commander and his staff on all fire support matters.

- Supervise preparation of the interdiction plan for fire support.
- Assign target numbers to targets developed by the main CP or FS cell.
- Maintain the fire support status, and report to the supported maneuver commander and his staff as necessary.
- Receive, coordinate, and forward fire support requests from subordinate units.
- Ensure organic or attached nuclear-capable units are correctly positioned.
- Recommend the prescribed nuclear load (PNL) and prescribed chemical load (PCL) for division units.
- Supervise preparation of the division nuclear subpackage recommendation.
- Recommend fire support coordinating measures.
- Coordinate with the A^2C^2 element to provide the corps main FS cell data for establishment of minimum risk routes MRRs) for aircraft. Coordinate the division fire support plan with adjacent divisions and corps FS cells.
- Advise other fire support representatives, and resolve conflicts and duplication among fire support asset systems.
- Coordinate the field artillery portion of fire support plans with the div arty CP.
- Send fire orders to the div arty CP when necessary.
- Pass the maneuver commander's guidance on target attack priorities and allocation of fires to other fire support representatives and to the div arty CP.

Fire Support Officer, Operations Cell, Division Rear Command Post

The FSO represents the FSCOORD at the division rear CP. The duties of the FSO are as follows:

- Collate base, base cluster, and response force fire support plans into a composite rear operations fire support plan.
- Coordinate the rear operations fire support plan with the division FSCOORD and the TCF.
- Coordinate with the FS cell at the main CP for fire support for bases or base clusters and/or response forces.
- Review requests for CAS from response forces or the TCF, and forward the request to the FS cell at the main CP.

NOTE: The following paragraphs outline the general duties and responsibilities of the key fire support personnel at corps and division. In most cases, the duties are similar at both echelons.

Field Artillery Intelligence Officer

The duties of the FAIO are as follows:

- Serve as FS cell representative in the all-source production center.
- Inform the ASPC of fire support intelligence requirements; for example, high-payoff targets and indicators.
- Screen and segregate combat information, weather, and intelligence in the ASPC for use in fire support targeting.
- Pass targets developed by the ASPC to the FS cell.

- Coordinate cueing of target acquisition resources under ASPC control with the FS cell.
- Advise the ASPC on fire support and target acquisition matters.

Target Analyst

The duties of the target analyst are as follows:

- Analyze targets for possible engagement by nuclear and toxic chemical weapons, as directed by the AFSCOORD.
- Plan interdiction targets for attack by conventional, nuclear, and chemical fires or weapons.
- Perform detailed nuclear target analysis and aimpoint refinement as part of the nuclear planning effort.
- Provide technical expertise regarding limiting requirements, troop safety, collateral damage preclusion and effects of nuclear weapons.
- Coordinate chemical planning with the corps or division chemical officer.

Air Liaison Officer

The ALO is a member of the TACP at each appropriate echelon of command. His duties are as follows:

- Provide expertise, help request and monitor requests for immediate CAS, and process nominations for BAI.
- Work closely with the AFSCOORD to determine where air-delivered systems can be used to the best advantage, and provide information on the requirements for SEAD fires.
- Keep the AFSCOORD and the G3 informed of the current status of air support assets.
- Provide communications means to enter the air request net (USAF).

Assistant Air Defense Officer

The assistant AD operations officer comes from the corps or division Army airspace command and control element. He serves as the A^2C^2 representative in the FS cell.

Naval Gunfire Officer (Division)

The NGO acts as the liaison officer for the naval task force supporting the division. He coordinates all naval gunfire that is supporting the division or that may affect division operations. He advises the AFSCOORD on all matters pertaining to naval gunfire employment. These matters include capabilities, limitations, status of fire support ships, and targets suitable for NGF engagement.

Operations Sergeant

The duties of the operations sergeant at corps and division are as follows:

- Help maintain 24-hour operations in the FS cell.
- Supervise the installation of operations equipment and communications in the FS cell.
- Supervise the enlisted personnel in the FS cell, and process administrative matters pertaining to the FS cell.
- Help the AFSCOORD prepare fire support documents.
- Supervise the posting and maintenance of all FS cell charts and records.
- Prepare required reports in accordance with local directives.
- Maintain classified files.
- Assemble and disseminate the priority information requirements and information requirements.

Fire Support Sergeant

The duties of the fire support sergeant are as follows:

- Serve as primary assistant to the AFSCOORD in coordinating fire support.
- Help the target analyst in interdiction planning.
- Supervise the fire support specialists.
- Maintain and update fire support status charts and situation maps.
- Perform the duties of the operations sergeant in his absence.
- Maintain the staff journal.

Fire Support Specialist

The duties of the fire support specialist are as follows:

- Work under the guidance of the fire support sergeant.
- Help operate and maintain section equipment, to include computer equipment.
- Help in fire support planning and coordination.
- Operate and maintain communications equipment.
- Prepare and maintain a situation map.
- Prepare and post daily staff journals and reports.
- Help establish, operate, and displace the FS cell equipment.

Target Processing Specialist (SGT)

The duties of the target processing specialist (SGT) are as follows:

- Maintain target acquisition plan (TAP).
- Analyze targets on TAP for possible engagement by nuclear and toxic chemical weapons, as directed by the target analyst.
- Plan interdiction targets on TAP for attack by conventional, nuclear, and chemical fires or weapons.
- Help provide technical expertise regarding limiting requirements, troop safety, collateral damage preclusion, and effects of nuclear weapons.
- Help perform detailed nuclear target analysis and aimpoint refinement as part of the nuclear planning effort.
- Supervise the posting of targets on the targeting overlay.
- Supervise and maintain the relative value matrix chart.
- Supervise training of the section on target log, target cards, relative value matrix chart, and spread sheet.
- Perform duties as required by the target analyst.
- Perform duties of the fire support sergeant in his absence.
- Be knowledgeable of the Threat force equipment and tactics.

Target Processing Specialist (SPC)

The duties of the target processing specialist (SPC) are as follows:

- Log all targets from sources (for example, FAIO, division FS cell, brigade operations, and TACFIRE).
- Maintain the relative value chart.

- Help post targets on the targeting overlay.
- Fill out and maintain target cards.
- Help the target analyst prepare spread sheets and briefing materials.
- Maintain necessary references.
- Perform duties as required by the target analyst.
- Perform duties of the target processing specialist (SGT) in his absence.
- Be knowledgeable of the Threat force equipment and tactics.

APPENDIX B

FIRE SUPPORT PLANNING FACTORS

This appendix implements STANAG 2103/QSTAG 187, Edition 6, and STANAG 2104/QSTAG 189, Edition 6.

This appendix addresses the following areas of concern for fire support planners on the AirLand battlefield:

- *Deep operations.*
- *Close operations.*
- *Rear operations.*
- *Counterfire.*
- *Suppression of enemy air defenses.*
- *Nuclear operations.*

Section I. DEEP OPERATIONS

Description

To successfully conduct a deep attack, the FSCOORD, G2, and G3 must cooperate fully to keep the proper emphasis on deep operations.

In the offense, a deep attack is conducted primarily by fire to isolate, immobilize, and weaken the enemy in depth in order to sustain the momentum of the attack. In such an attack, fires are planned to block the movement of enemy reserves.

In the defense, the deep attack may be conducted by fires and/or by maneuver forces.

In either the offense or the defense, fires are planned to degrade and disrupt enemy—

- Attacking echelons.
- Fire support.
- Command, control, and communications.
- Combat support and combat service support.

FSCOORD Considerations

Lance missiles, Army tactical missile system (ATACMS), EW, attack helicopters, and BAI are the primary tools used to provide long-range deep attack fires. When maneuver elements are used in the deep attack artillery may be required to accompany the force. When field artillery accompanies the maneuver force in the deep attack, fire support considerations include the following:

- Mutual support must be planned for FA units equipped with automated fire support equipment.
- Extended communications lines are required between the MBA force artillery and the accompanying artillery units.

- Ammunition expenditure will be large.
- Maneuver force assistance may be needed to ensure security and survivability of FA units.
- Target acquisition and intelligence-gathering assets will be taxed because of distances, frequency, and speed of moves.
- Logistical support, to include recovery, repair, and resupply, constrain the force.
- Mobility of FA units must match that of the maneuver force.
- Command and control problems are inherent in any force operating at extended ranges from its parent organization.
- Simultaneous interdiction fires using long-range weapon systems must be planned to add weight to the attack.

Initially, the deep attack force must rely on the MBA forces for most of its fire support. Counterair (CA) missions must be used to prepare the route of advance and to ensure either local air superiority or air parity. Attack helicopters may have to provide convoy protection. Offensive EW will be necessary to keep the enemy from effectively redeploying to meet the deep attack force. Tactical deception measures to cover development of the deep attack force help ensure surprise.

When the deep attack force has outdistanced the MBA artillery, organic mortars, accompanying artillery, and CAS provide most of the fire support for the force.

Successful deep operations create the conditions for future victory. The following factors must be considered in planning for deep operations:

- Deception.
- Deep surveillance and target acquisition.
- Interdiction by ground or air fires, ground or aerial maneuver, special operations forces (SOFs), or any combination thereof.
- Command, control, and communications countermeasures.
- Command and control.

Deep operations must be focused against those enemy capabilities which most directly threaten the success of projected friendly operations.

Deep Operations Plan Format

A sample of a deep operations plan format is shown below. Individuals or elements shown in parentheses indicate responsibility for information in the paragraphs.

SAMPLE DEEP OPERATIONS PLAN FORMAT

```
                    (Classification)

     *       *       *       *       *       *       *

Task Organization (G3 plans/FSE/EW/PSYOP)

     *       *       *       *       *       *       *

1.   SITUATION

     a.   Enemy Forces.[1] (G2/corps arty G2)

                    (Classification)
```

SAMPLE DEEP OPERATIONS PLAN FORMAT (CONTINUED)

(Classification)

b. Friendly Forces. (G3 plans/EW officer/FSE)

c. Assumptions. (G3 plans)

2. MISSION[1] (G3 plans)

3. EXECUTION

a. Concept of Operation (includes avenues of approach, NAIs, and TAIs). (G3 plans)

(1) Concept of operations for BAI.[1] (ALO)

(2) Concept of operations for artillery. (FSE)

(3) Concept of operations for EW. (EW officer)

(4) Concept of operations for maneuver. (G3 plans/G3 Air/avn)

(5) Concept of operations for psychological warfare. (PSYOP)

b. Corps Deep Target Priorities.[2]

(1) Target area priorities.

(2) Relevant high-value target priorities and attack means.

c. Coordinating Instructions. Consider--

(1) BAI.[1] (ALO)

(2) Corps arty. (FSE)

(3) EW. (EW officer)

(4) SEAD. (G3 Air/FSE/avn)

(5) Attack helicopters. (G3 Air/avn)

(6) Maneuver. (G3 plans)

(7) Engineer. (Engr)

(8) Chemical. (Cml)

(Classification)

SAMPLE DEEP OPERATIONS PLAN FORMAT (CONTINUED)

(Classification)

(9) Psychological warfare. (PSYOP)

(10) Priority intelligence requirements. (G2/corps arty G2)

(11) Nuclear. (G3)

4. SERVICE SUPPORT (G4)

5. COMMAND AND SIGNAL (G3/communications officer)

* * * * * * *

[1]Included in BAI targeting plan.
[2]Those portions relative to BAI included in BAI targeting plan.

(Classification)

Section II. CLOSE OPERATIONS

Description

At the operational level, close operations include the efforts of large tactical formations—corps and army groups, joint or unified headquarters—to win current battles. At the tactical level, close operations include the efforts of smaller tactical units to win current engagements. Among the activities typically making up close operations are the following:

- Maneuver (including deep maneuver).
- Close combat (including close air support).
- Indirect-fire support (including counterfire).
- Combat support and combat service support of committed units.
- Command and control.

The measure of success of deep and rear operations is their eventual impact on close operations.

Fire Planning

Timely fire planning provides adequate fire support to protect our forces in the close and rear battles. At the same time, it keeps the enemy from effectively developing his own operations by providing for deep attack of targets, which would interfere with our battle plan. The process by which this is achieved includes the following:

- The formulation of a fire plan to coordinate the allocation of resources. This includes the allocation of GS artillery and details of control arrangements and proposals for the use of TACAIR. Thus, the fire plan can be modified to meet changing requirements.
- The acquisition of information and high-payoff targets and the passing and processing of that information.
- The consideration of weapon resources available and the selection of the most suitable weapons to attack the targets.

Planning Guidelines

In any fire planning, there are certain common guidelines.

Mass

The basic principle of mass must be kept in mind when making a fire plan. It can be achieved only by a proper organization for combat, proper selection of weapons and ammunition, and, in some cases, the amendment of a tactical plan.

Flexibility

The provision of adequate fire support depends on flexibility, both in planning before and control during the event. It is also necessary to allow for modifications in the fire plan to cater to unforeseen circumstances.

Simplicity

A simple fire plan is easier and quicker to produce, has a better chance of being understood by all concerned, and is easier to modify if necessary.

Surprise

Surprise in defense and attack may be prejudiced by the preparations for supporting fire and by the use of stereotype methods. To avoid loss of surprise, careful consideration must be given to the amount of prior adjustment of fire that may be carried out. Some may be essential if fire is to be brought down close to our own troops. In other cases, it may be advantageous to accept a proportion of nonadjusted fire, especially if it can be adjusted by observation during the actual engagement of the target. The ideal, of course, is to bring down accurate fire without any obvious preparation. This requires accurate and common survey between target acquisition sensors and attack systems.

Coordination

Many weapons are used to produce fire support, and their differing characteristics are designed for a specific task or tasks. The weapons available must be considered as a whole, each complementing the other. At division level, the main weight of fire support comes from the division- and corps-allotted field artillery. Yet, to make a fire plan first with field artillery and then to add air, mortar, and naval gunfire results in a badly balanced plan that fails to make the best use of available resources. Fire support must be coordinated so that each weapon plays the part for which it is best suited.

Ammunition Supply

The supply of ammunition for a fire plan must be considered in the early stages of planning. The ability of the logistic system to provide the quantities of ammunition required affects the weight of fire support available. It can be a controlling factor in the selection of H-hour and could affect the whole operational plan. Hence, every effort should be made to forecast the need for ammunition in time for the logistic system to have adequate stock ready rather than react after the need has arisen.

Sequence of Fire Planning

The general sequence is the same for both informal and formal fire plans. In a formal fire plan, apart from the greater time available for its preparation, more fire support resources are used. Thus, greater coordination and detailed planning at higher headquarters are required. An informal fire plan usually is coordinated by the headquarters originating the plan.

Resources

In an informal fire plan, the planner knows the resources available to him. In a larger, formal fire plan, an allocation of resources usually is given with the task when it is handed down from higher headquarters. If the operation originates at the lower level, it may be necessary to ask for an allocation of extra

resources. This allocation usually is made in terms of fire units, ammunition, and aircraft. It may be qualified by times available or restrictions to certain phases. In formal fire planning, the initial allocation of fire support is a planning allocation, which can be changed as planning proceeds and priorities are established. When considering resources, direct-fire weapons integral to the attack force, such as armor, must be considered as well as other sources. In either case, the more information available on the enemy layout and dispositions, the more accurate and effective will be the fire support. Information availability also determines the resources retained under the commander's direct control and the priorities of fire.

Commander's Concept

The commander's concept is considered against the fire support available. The FSCOORD must advise the commander when he is making his estimate. Once the commander has determined his concept, warning orders should be issued to fire support agencies concerned. This allows preparations to commence, including adjustment and planning for redeployment, reallocation of resources, and bids for extra support.

Detailed Fire Plan

Once the course of action has been determined, the detailed fire plan may be begun. The FSCOORD must know the following:

- The targets to be engaged and timings.
- Any targets on call.
- Requests from the G3 air for TACAIR.
- The effect required on each target which he translates into terms of weapons and types of ammunition.
- The priority of engagement of targets.
- Arrangements for changing the fire plan.
- Policy on adjustment of targets before H-hour.

Fire Planning Terms

The various types of fire support required in battle and the terms used to describe such fire support include those discussed below.

Fire support tasks in all phases of war are as follows:

- Interdiction (attack at depth).
- Counterfire.
- Suppression of enemy air defense systems.

Defensive fire includes —

- Support that includes counterpreparation fire, close planned fire, and final protective fires (FPFs).
- Covering fire as support to a counterattack.

Offensive fire includes —

- Preparation fire.
- Covering fire.
- Defensive fire to cover reorganization.

Interdiction Fire

The aim of interdiction fire is to disrupt, delay, and destroy enemy forces that, because of range limitations or intervening terrain, cannot fire their primary weapon systems on friendly forces. Targets include first-echelon forces not participating in the direct battle and follow-on echelons. Interdiction fire creates windows for friendly unit offensive maneuver. Brigade commanders may develop a requirement for interdiction fires based on their concept of the operation and war games or rehearsals. These targets may then be given to the division main command post FS cell for inclusion in the division's planned or on-call target list.

Counterfire

The aim of counterfire is to destroy or neutralize the enemy indirect-fire systems, to include mortar, artillery, air defense, missile, and rocket systems. Observation posts and field artillery command and control facilities are also counterfire targets. Counterfire allows freedom of action to supported maneuver forces and is accomplished with mortars, guns, and aircraft. Counterfire is planned and executed for offensive and defensive operations, or it is fired in response to a request from a maneuver commander. An efficient combined arms target acquisition system is required, and counterfire should be controlled at the highest level that can ensure the timely attack of targets. See Section IV for a detailed discussion of counterfire.

Suppression of Enemy Air Defense

SEAD is that activity which neutralizes, destroys, or temporarily degrades enemy air defense systems in a specific area to enable air operations to be successfully completed. Army SEAD operations are designed to support operational and tactical plans by protecting Army aviation assets near the FLOT or during cross-FLOT operations. SEAD also includes the protection of Air Force aircraft (such as CAS aircraft) supporting the ground commander's operation. The basic principle of Army SEAD operations is *see-kill*. This means that enemy air defense systems are attacked immediately upon detection, consistent with the commander's intent and the best application of resources. Formal SEAD fire planning normally is conducted and coordinated at division level or higher and may involve other services (J-SEAD).

Defensive Fire

When enemy preparations for an attack are discovered, his forces must be brought under the maximum mass of counterpreparation fire immediately. The objective is to defeat his ability to mount the assault and to start the close defensive operation at the longest practicable range. Defensive fire provides close support to maneuver. It inflicts both personnel and equipment casualties on the enemy.

Planning

A defensive fire plan provides the framework on which to fight a defensive battle. It allows the maximum weight of fire to be brought to bear quickly on the enemy's preparation for the attack and his assault. All available weapons must be included in this fire plan.

The volume of fire required on each target may not be known in the planning stages. The success of a defensive fire plan depends on the flexibility of response. The fire support command and control system, coupled with its communications, provides the medium for this flexibility. A large part of the defensive battle is fought and controlled through this system.

Planning Sequence

Defensive fire planning starts with an examination of the enemy's probable action, usually based on his approaches to our position. The fire plan should not be based on individual defensive fire tasks but rather on the treatment of particular approaches. This must include the routes, assembly areas, lines of departure, and ground over which the enemy will assault. An enemy is particularly vulnerable in his initial moves for an attack and when organizing into assault formation. Once an enemy attack gets under way, one of the main purposes of a defensive fire plan is to seal off the attack and keep the enemy from reinforcing it.

Fire planning is conducted through a formal top-down process with bottom-up refinement as time permits. The corps G2, in conjunction with the G3 and FS cell representatives,

performs a detailed IPB and target value analysis for the entire corps area of operation. Named areas of interest and target areas of interest are included in the IPB. High-payoff targets for the corps and specific targets of interest and/or schedules of fire come *top down* to the division FS cell. Concurrently, the division G2 and FSCOORD must refine the corps guidance for the division area and concept of operation. As they are developed, the division FSCOORD receives from corps targets in the division zone and area of interest which have been developed by the corps IPB and/or acquired by corps or higher acquisition assets. The FSCOORD, working with other FS cell members, the G2 and the G3, develops targets within the division zone. He adds these targets of particular interest to the division target list and passes the target list to each brigade. The target development process continues, concurrently, down to company level. After review of the battalion target list, the company FSO nominates additional targets in his zone or sector and forwards his target list back up to the battalion FSO. The battalion FSO considers the targets he receives from each company FSO, consolidates them (for example, eliminates duplications) and forwards a copy of the refined target list back to the brigade FSO. As target lists are developed at each level, fire plans are prepared to support the commander's intent for synchronizing the scheme of maneuver with fire support. Fire plans also allocate targets to the appropriate fire support agency or asset for execution at the appropriate time.

Counterpreparation Fire

Usually, there is some warning of an enemy attack. The enemy must be brought under the maximum mass of counterpreparation fire as early as possible. The close defensive battle should start at the longest practicable range. The ideal defensive fire plan is one that disrupts the enemy's preparations to such an extent that he cannot mount an assault.

Counterpreparation fire disrupts the enemy's preparations for an attack or a counterattack. It does this by striking him in his assembly areas; breaking up his attack formations; disorganizing his command, control, and communications; impairing his target acquisition efforts; and reducing his morale. Counterpreparations are usually scheduled as on call. The counterpreparation may be phased–although this is certainly not required– to successively attack certain types of targets.

Phase 1 includes—

- Forward elements.
- Indirect-fire systems.
- Observation posts.

Phase 2 includes—

- Command posts.
- Communication and reserves while attack of indirect-fire systems continues.

NOTE: Targets are selected, usually at brigade level or higher, on likely enemy approaches to defensive positions.

Planned Fire

The aim of planned fire is to break up the enemy's attacks by striking him when he is forming up or assaulting. Subsequently, the fire is adjusted to continue attacking him during his assault until he is forced to break off the attack. Targets are initially selected by company commanders; the final selection is made by the battalion commander. Further coordination occurs at higher levels to prevent duplication of targets; for example, near unit or force boundaries. When selecting planned fire targets, the following factors are paramount:

- The likely enemy approaches.
- The location on the ground at which the enemy is likely to be first detected when attacking.
- The likely enemy assembly area.
- The use of planned targets as reference points for subsequent adjustment of fires.

Measured Response

The force SOPs should establish a standard response for certain defensive fire tasks. The SOP also may identify the FSCOORDs or units which may initiate these responses. This procedure ensures that ammunition expenditure is controlled, that priorities are maintained, and that FSCOORDs or units authorized more fire support resources are kept informed as the battle progresses.

Fire Planning for an Attack

Purpose

For the purpose of fire planning, the attack may be considered as basically a movement problem; that is, the movement of enough force onto an objective to achieve an aim. The enemy will strive to prevent this by using his fire support, obstacles, and maneuver. The main purpose of a fire plan for an attack is to neutralize enemy direct and indirect fire during all stages of the attack and to prevent reserves and second-echelon forces from interfering.

Types of Plans

A fire plan for an attack can vary from an informal fire plan required as soon as possible to a formal fire plan in support of an attack some time in the future.

Informal Fire Plan. Depending on the time available, informal fire planning may be necessary at brigade level and below. An informal fire plan is developed to meet a relatively urgent H-hour. However, the maneuver commander may have to delay his H-hour if artillery redeployment or ammunition availability so necessitates; and this should be one of the factors considered in his estimate. Having targets on call will be more normal than having a timed program related to a rate of advance. Fire may have to be adjusted as the attack proceeds if there was not enough time to do so previously. Well-rehearsed fire planning drills between commanders and FSCOORDs and/or FSOs are essential.

Formal Fire Plan. The formal offensive fire plan follows the same *top-down* process with *bottom-up* refinement as discussed earlier. The plan often involves a large concentration of fire support resources. The coordinating headquarters normally is the division or corps FS cell (usually one level above the headquarters making the fire plan). A substantial redeployment of artillery and a large-scale positioning program for ammunition may be required. This is the responsibility of the coordinating headquarters. Consequently, a considerable amount of time usually is needed for planning and coordination.

Changes

The best prepared fire plan rarely goes beyond H-hour without some changes. FSCOORDs and/or FSOs at all levels must ensure that fire planning and target adjustment drills are well-rehearsed and procedures for changing the fire plan are clearly understood by all.

Planning Considerations

The fire plan must cover the entire attack and be integrated with the actions of the attacking troops. Offensive fire planning should include the types of fire discussed below.

Preparation Fire

Preparation fire may vary from a brief, intense bombardment on selected targets to a

prolonged effort over several days, covering a large number of targets. Commanders must be clear on what they hope to achieve by this sort of fire. The effectiveness of preparation fire varies with each situation; and its feasibility depends on such factors as surprise, deployment, ammunition supply, and type of weapons available. Preparation fire is planned by the commander planning the attack, Normally, fire begins before H-hour and may extend beyond it. Firing may start at a prescribed time, or it may be held on call until needed. The preparation may be phased as follows:

- Phase 1 — attack of fire support means and observation capabilities, including artillery headquarters and command posts.
- Phase 2 — attack of main command posts, communications facilities, assembly areas, and reserves.
- Phase 3 — attack of defensive areas in the forward portions of the position areas and targets that pose an immediate threat to attacking units or forces.

Covering Fire

Covering fire is used to cover the movement of the attacking unit or force during the formation, assault, and initial stages of reorganization during the early stages of the attack. Its most effective form is massing of fire on a time schedule. There may be targets on call, and some weapons must be superimposed on targets to provide a reserve of firepower. This reserve is used to engage targets of opportunity or to counter unexpected enemy action.

Covering fire is used during the attack and counterattack. The aim of covering fire is to protect assaulting troops by neutralizing enemy direct-fire weapons that can engage them during the attack and counterattack. Neutralization is achieved when the enemy is prevented from maneuvering, observing, and using his weapons effectively and a 10 percent kill rate is inflicted. To be effective, covering fire support should be potentially lethal, intense, and continuous. Covering fire support for an attack always should be planned in advance by the commander planning the attack. Normally, it includes one or all of the following: schedules, targets on call, and targets of opportunity.

Schedules. Schedules establish planned timings for individual targets to cover the period of the attack. The schedule must be modifiable, since few attacks go exactly as planned. If communications are lost, fire support would be provided in accordance with the schedule; the maneuver force would have to adjust its rates of movement to synchronize with the schedule.

Targets on Call. These are planned targets that are arranged in all detail less their timings. They ensure a quick response and can be called for at any time. This is a form of contingency fire planning.

Targets of Opportunity. At times in an attack, covering fire support may be needed on targets that have not been planned. Fire can be called for by FSOs, COLTs, forward observers, air observers, naval gunfire liaison officers or air liaison officers supporting the attack, and the assaulting troops themselves. All combat arms officers and non-commissioned officers also should be trained to call for and adjust fire support.

Defensive Fire During Reorganization

The attacking unit or force is most vulnerable to counterattack during reorganization. Defensive fire to cover this phase must be included in the fire plan. Initially, these targets are planned from maps, air photographs, or other information sources. Then they are confirmed and, if possible, adjusted as soon as possible after the assault arrives on the objective.

Cover for Exploitation

Normally, this cover consists of massed fire on call and an allotment of weapons and ammunition. Opportunity exploitation tasks may have to be supported by resources retained under the commander's direct control for the purpose of influencing the battle when required. The commander may have to reallocate fire support resources or change priority of fires.

Counterfire

The neutralization of enemy guns and mortars should be a continuing process throughout the attack. Demands for fire support resources at critical stages of the attack may restrict counterfire for certain periods. Even though counterfire is coordinated at the highest level, normally division or above, it must be considered at all stages of planning the attack. It must not be treated as a separate subject after the stages discussed earlier are planned. Counterfire must be considered as the neutralization of the enemy's main fire support. Its importance to the success of the attack cannot be overemphasized.

Determination of H-Hour

H-hour is determined by tactical considerations and the time necessary to prepare for the attack. A commander may have to decide on the relative importance of launching his attack quickly as opposed to waiting for guaranteed accuracy of fire support. In larger-scale attacks, the preparations could be lengthy. They could include positioning of ammunition, redeployment of resources, and, possibly, movement forward of extra fire support. From these factors, a D-day can be established. H-hour may still be governed by technical requirements. For example, if resources must be moved under cover of darkness to new primary positions before they fire the fire plan, H-hour cannot be early in the evening. If close air support is to be relied upon to any extent, daylight and certain weather conditions may be needed.

Commander's Ability to Influence

In the same way the commander provides for a maneuver reserve for all stages of an attack, he also must retain control over fire support resources (GS or GSR) that are immediately responsive to his needs. The commander does this to —

- Engage previously undetected targets that threaten to break the momentum of the attack.
- React to enemy initiatives; for example, prevent the enemy from moving his reserve to reinforce a faltering sector of his defense.
- Maintain a capacity for counterfire throughout the attack.
- Provide for defensive fire during the reorganization stage.
- Ensure he has enough firepower available to support exploitation or extraction of specific elements as dictated by the tactical situation as it develops during the attack.

As a general rule, the less the commander knows about the enemy, the more fire support resources he should retain to support the battle plan as a whole. The amount and composition of resources retained under centralized control by the commander depend on the following factors. These factors are deduced during the commander's estimate (the FSCOORD's and/or FSO's advice would be sought as appropriate):

- The likely enemy reactions to the attack.
- The size and composition of the likely Threat force at each stage of the attack (both maneuver and firepower elements).

- The number and type of targets that must be attacked simultaneously during the attack.
- The number and type of fire units and ammunition available for the attack.
- The size of the ammunition reserve mat can be established for all stages of the battle.
- The ability to position fire support resources under centralized control so that they can be superimposed on the fire of others. This should be planned so that the removal at short notice of the superimposed fire does not seriously diminish the effects of fire on the target nor affect the structure of the fire plan.

Changes to Fire Plans

A fire plan can be changed during its execution to meet unforeseen circumstances. The authority to do this should be kept at the highest feasible level, usually with the commander of the operation. Orders for changes must be clear and simple so they can be readily understood in the heat of battle. Change is easier if its possibility is considered during planning by—

- Keeping the plan as simple as possible.
- Dividing covering fire into clearly defined stages.
- Grouping targets.
- Keeping enough GS fire units superimposed. The proper handling of GS firepower can sometimes obviate the necessity for a change to the fire plan.

Observation

Fire delivered in support of any plan should be observed. Observers from the artillery, Army aviation, Navy, or Air Force, as appropriate, should be located where they can observe the effect of fire and make any necessary adjustments. Also, they should be able to pass back information on the progress of the attack. To be effective, these observers should be in static positions and not intimately involved in the battle.

Mobile observers are needed with the attacking troops to deal with targets of opportunity. They also provide observation, reporting, and liaison during the critical reorganization phase. In particular, they adjust the defensive fire tasks that have been planned and request any additional planned close targets for inclusion in the list of defensive fire tasks.

The briefing of observers, either accompanying an attack or observing it from a static or airborne position, is most important. They must fully understand the tactical plan and the fire plan, the authority for modification, and the allocation of observers for the adjustment of fire.

Section III. REAR OPERATIONS

Description

The purpose of rear operations is to ensure friendly forces freedom of action to support combat forces in the close and deep operations. Depending on the threat level involved (see Chapter 4, Section VI), rear operations CPs control available forces for rear area security. The FSCOORD considerations unique to rear operations are discussed in this section.

Fire Support Tasks

The following are fire support tasks unique to rear operations:

- Establish an FSE within the operations cell of the rear CP.
- Identify fire support assets available for rear area fire support.
- Select and prepare supplementary positions for indirect-fire weapons if needed.
- Arrange survey control for rear area positions for indirect-fire weapons.
- Determine FA ammunition considerations for rear operations.

Command and Control

Command and control considerations in rear operations include the following:

- Fire support agencies committed to support rear area forces are designated by on-order missions.
- Communications procedures (net, call signs, and so forth) to plan and execute fire support are established and disseminated.

Fire Support Planning and Coordination

Considerations in fire support planning and coordination for rear operations are as follows:

- Implement fire support into rear operations plans.
- Plan fires and targets in the rear area.
- Coordinate for route clearance with the rear CP CSS cell and with the rear operations cell for the movement of FA units through the corps or division rear area.

Special Considerations

The principal means of fire support normally available to support rear operations are mortars, field artillery, and aircraft. In those areas near a coastline, NGF support also may be available.

Dedicated fire support for rear operations should be considered when the Threat situation dictates and sufficient fire support assets are available.

For some rear operations, field artillery with a 6,400-mil firing capability positioned within the MBA may be able to support rear operations from its current positions. Other actions may require supplementary positions from which artillery can provide support. Routes to those positions are reconnoitered. Firing positions are prepared as time and the situation permit. Communications for fire support are planned. Maneuver elements assigned to rear operations will have their company fire support teams in place. This gives these elements FSCOORDs at levels through brigade-size forces.

The following factors must be addressed in planning fire support for rear operations:

Assembly and movement of reserves:

- Position reserves to support their anticipated commitment and to be secure from observation and attack.
- Move reserves under protection from enemy observation and interdiction.

- Deployment routes free from observation.
- Redeployment of fire support assets to—
  - Support future operations.
  - Protect them from enemy observation and interference.
- Maintenance and protection of sustainment efforts:
  - Protect against ground, air, and missile attack.
  - Accumulate stocks to support projected operations without decreasing support to currently engaged units.

- Maintenance of command and control.
- Deployment of command posts and communications networks where they can continue the fight without a break in operating tempo.

Section IV. COUNTERFIRE

Description

JCS Pub 1 defines counterfire as *fire intended to destroy or neutralize enemy weapons.*

Counterfire consists of fires targeted throughout the battlefield that are intended to attack the total enemy fire support system. It includes fires against accompanying mortars; helicopter forward operating bases; vector target designation points (VTDPs); fire support C^2; artillery, rocket, and missile systems; and support and sustainment installations.

Counterfire gains freedom of action for all friendly maneuver forces and is provided by all of the fire support means, both lethal and nonlethal. Counterfire is not a separate battle. It is inseparably tied to close and deep operations and is part of the overall combined arms fight to achieve fire superiority. A fine line may exist between counterfire and attack at depth. However, once a target is capable (that is, within range) of affecting the close fight, its attack is considered counterfire.

Counterfire is a function the force commander must address; it is not solely the responsibility of the force artillery commander. Intelligence assets must be prioritized to accurately locate; and operational attack assets (such as artillery, mortars, TACAIR, attack helicopters, naval gunfire, and EW assets) must be brought to bear on the total enemy fire support system.

Threat

In the Soviet Army, the artillery is the arm of decision and the *king of battle.* Historically, from the Great Patriotic War to more recent experiences in Afghanistan the Soviets exploit the success of fire support with maneuver forces.

Threat artillery is the decisive factor to achieve victory and guarantee success. Its ability to concentrate and mass fires for the main attack is expected to achieve devastating effects.

Typically, a Threat front commander pushes forward the target acquisition C^2, and artillery assets from both the first- and second-echelon armies. Our maneuver commanders will likely see across the FLOT an array of fire support systems that includes accompanying regimental fire support systems as well as supporting artillery positioned forward from division and army levels. Supporting artillery will be organized into regimental artillery groups, divisional artillery groups (DAGs), and army artillery groups (AAGs). The graphic on the next page shows a doctrinal laydown of the target set belts for Threat fire support systems.

Accompanying artillery, RAGs, and DAGs focus primarily on support of close operations against friendly maneuver elements. However, as required, they will also engage our fire support assets to support the Threat maneuver commander's efforts to gain fire superiority. In most situations, the primary targets for accompanying and supporting artillery are friendly maneuver forces and battle positions, not friendly artillery. The mission of the Chief of Artillery or Chief of Missile Troops and Artillery—as part of the overall reconnaissance, surveillance, target acquisition, and fire support effort—is to use his organic

and supporting assets to locate friendly maneuver units and then create the conditions for a breakthrough attack by destroying them with intense and overwhelming fires. These fire support systems (cannons, target acquisition, and C^2) are employed forward and located within 10 km of the FLOT.

The Soviets will also conduct extensive counterfire operations against our fire support systems. Their number one target priority remains the location and destruction of our nuclear-capable artillery and missile units. Doctrinally, Soviet counterfire operations are conducted primarily by use of AAG assets; however, RAGs and DAGs can also be used to support the counterfire battle. Centralizing control of his counterfire effort allows the Threat commander to mass large volumes of fires, possibly at the expense of timeliness. This potentially slower response may allow us to interrupt the Threat commander's decision cycle – a key ingredient to AirLand Battle success.

THREAT FIRE SUPPORT BELTS

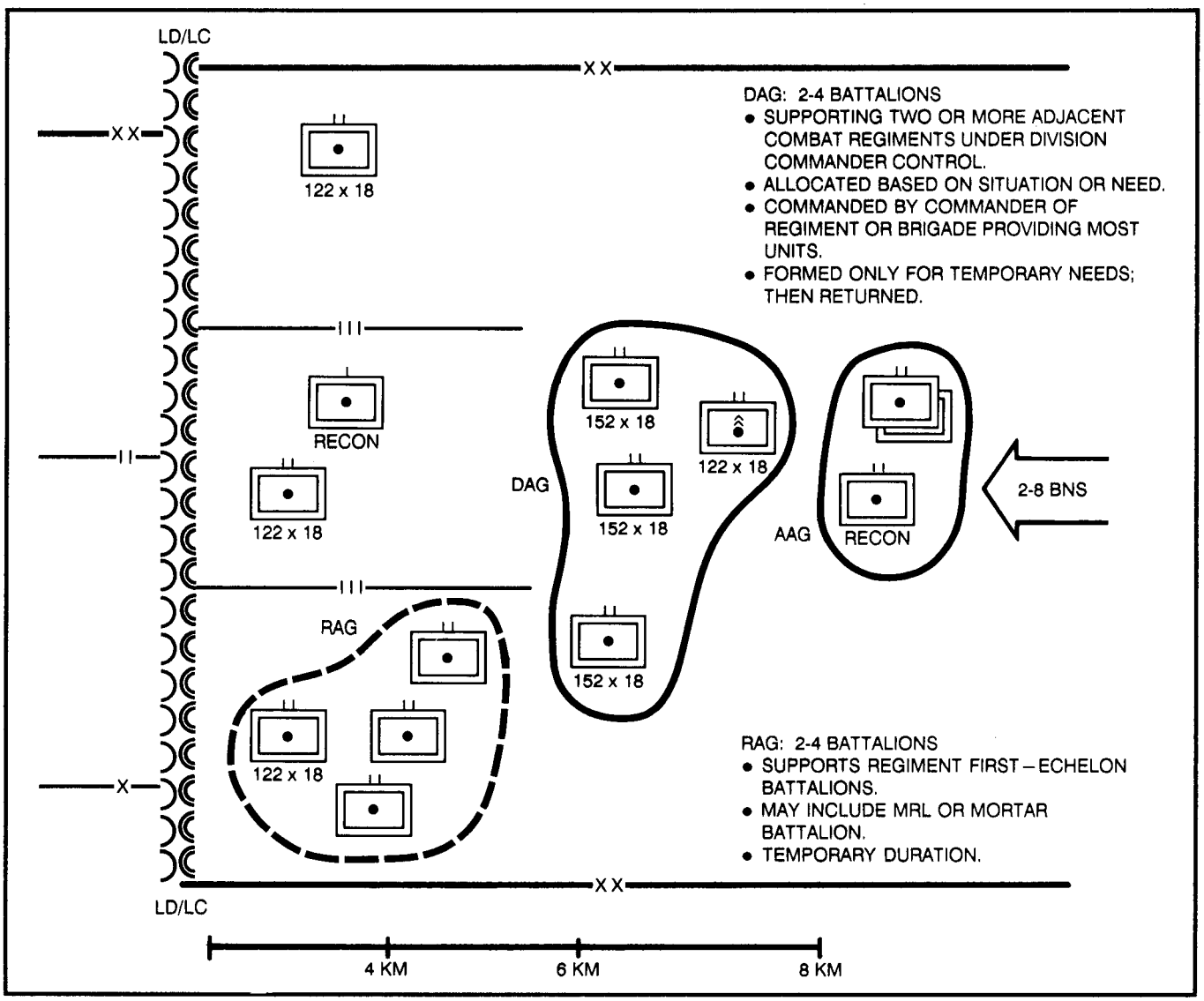

THREAT ARTILLERY FOCUS

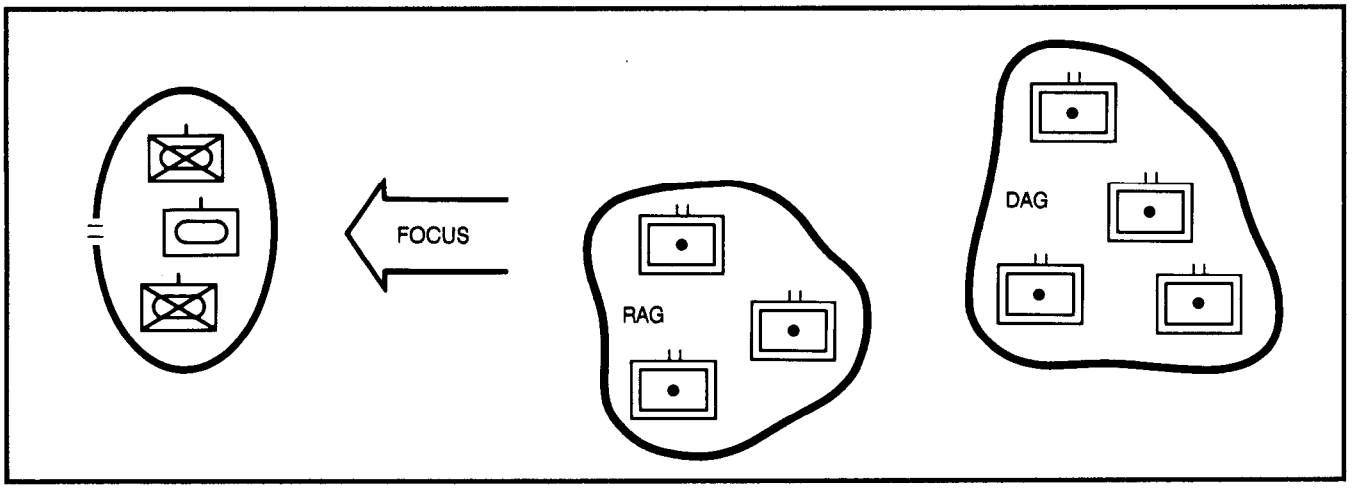

Concept

During Threat offensive operations, the main objective of Soviet fire support is to create a breakthrough situation in our maneuver force forward positions. When on the defense, the main objective of Threat fire support is to disrupt our attack formations through interdiction, massing and firing a solid wall of fire (barrages) in front of their own forward defensive positions. Our counterfire effort must negate this intense, numerically overwhelming condition and give our force commander an opportunity to achieve *fire superiority*. Fire superiority allows freedom of action for maneuver forces to achieve and maintain dominance and to use direct fire systems to attack Threat maneuver forces.

Achieving fire superiority against a force with overwhelming numerical advantage in delivery systems requires a counterfire effort that attacks the entire Threat fire support system early, in depth, and throughout the battle. Targeting the enemy fire support systems includes the **proactive** detection and attack of enemy nonfiring systems (sensors, C^3 facilities, support, and sustainment installations) as well as firing systems (the weapons themselves) before they engage friendly forces; for example, MRLs in assembly areas, a ZSU 23-4 on the road, or the signature of an operating VTDP.

The force commander must, through counterfire, wrest the initiative from his Threat opponent. To achieve fire superiority, our counterfire effort must do more than merely react to Threat fires. We want to attrit the overall Threat fire support system by using proactive counterfire and attacking Threat forces at depth, before Threat fire support systems can influence current operations. The counterfire efforts of the corps and subordinate divisions must focus throughout the entire depth of each commander's area of responsibility. Future organic target acquisition and attack systems will further extend the range of the corps proactive counterfire effort to 150 km.

Counterfire is a shared responsibility. Both corps and division are responsible for counterfire planning and execution. While the responsibility is shared, the location of the targets sets, the capabilities of sensor platforms, and the ranges of available weapon systems allow for an orderly and calculated division of labor.

Counterfire must contribute to the successful fulfillment of the corps commander's intent and the corps mission. In some scenarios, the corps mission may best be accomplished by planning and executing counterfire centrally at corps. To fix responsibility for counterfire within the corps, consideration must be given to –

- The location of hostile targets.
- The level at which the necessary assets and the ability to synchronize acquisition, processing and delivery exist.

Corps Counterfire Responsibility

The corps commander is responsible for counterfire throughout the depth of the corps area of responsibility. He, his FSCOORD, and his staff assess the counterfire threat to the corps. They determine the best way to protect the corps combat forces and to defeat, delay, or disrupt the Threat array. This estimate or analysis includes an assessment of the counterfire capabilities of the corps and its subordinate divisions. The corps commander's counterfire responsibilities include the following:

- Describing his intent; planning; and then deciding on the most effective course of action (COA) and task organization for the corps and its divisions to successfully meet the counterfire threat, protect the maneuver force, and at the same time accomplish the corps mission.
- Segmenting the battlefield by delineating maneuver boundaries and/or assigning areas of responsibility for corps and its subordinate divisions. This helps establish the delineation of counterfire responsibilities within the corps zone.
- Assigning missions and responsibilities, to include specific taskings to intelligence assets through the G2.
- Allocating resources. The corps commander ensures that counterfire assets are allocated in accordance with assigned missions and his intent. Corps assets may be retained at corps or allocated to subordinate divisions. Conversely, in some situations, the corps commander may require the use of division assets to support a corps counterfire responsibility. He should provide guidance for use of certain critical assets such as the corps aviation brigade, BAI and reconnaissance sorties, OH-58Ds, SOFs, and EW assets.
- Requesting additional TA and attack systems from army group, theater, or joint task force level or from other EAC headquarters.
- Detecting and attacking. The corps detects and attacks targets within its area of responsibility, typically beyond the established fire support coordination line (FSCL). The corps also may attack targets within a division area of responsibility when the division has forwarded such a request to corps based on priority and need. Within its capability, the corps may respond to requests for additional fires from adjacent units.
- Monitoring. The corps commander monitors the execution of his intent throughout the corps area.
- Assessing. Finally, the corps commander must assess the protection of his combat units and the effects of counterfire against Threat fire support systems. As appropriate, he adjusts intelligence collection and/or attack priorities for protection of his force and attack of enemy targets. He may reallocate assets and/or modify the missions of subordinate units.

Corps Counterfire Forward of the Division Area

By using organic assets and accessing higher-level resources, the corps commander has a capability for proactive counterfire. (The

ability of divisions to effectively conduct counterfire with organic assets against targets beyond 30 km is currently limited by both acquisition and delivery means.) The corps commander can—

- Detect heavy MRL battalions, VTDPs, helicopter forward operating bases, and other counterfire targets. He does this by use of organic aviation assets and collectors from the corps MI brigade, long-range surveillance units (LRSUs), and special operations forces.

- Attack Threat fire support systems with MLRS and cannon battalions of the corps FA brigades out to ranges of 30 km. Beyond 30 km, deeper strike assets (such as EW, Lance, ATACMS, Army aviation, allocated Air Force sorties, and ground maneuver forces) must be considered for target attack.

- Request additional acquisition and/or attack assets from EAC, the JTF commander, or the Air Force. The joint attack of artillery (JAART) concept requires that attack helicopters, TACAIR, and available indirect fires attack Threat fire support systems across the FLOT. A JAART is similar to a JAAT operation, but it is targeted against Threat fire support systems. A JAART may be a viable option if the corps commander faces an overwhelming counterfire threat and decides to commit all available fire support assets to reduce force ratios.

Corps Counterfire in the Division Area

The corps commander decides how the corps will conduct counterfire operations. He influences how subordinate division commanders fight through the allocation of corps assets, the issuance of attack guidance, and the identification of corps high-payoff targets. He can support a division commander's counterfire efforts by attacking Threat fire support systems at depth; thus, he helps to shape the division counterfire battle.

In addition to allocating assets to divisions, the corps commander can further support a division counterfire battle by responding to the division requests with BAI, MLRS, Lance, and EW. With respect to counterfire in the division area of responsibility, the corps commander—

- Assigns missions to division and corps fire support assets and delineates their areas of responsibility by establishing boundaries.

- Provides IPB products and critical intelligence information developed at corps or received from higher or adjacent headquarters.

- Detects and attacks targets forwarded by the division. As appropriate, the corps, after coordinating with the division FSE, may attack Threat fire support targets within the division zone by massing fires to achieve required effects. Procedures for attacking Threat systems firing from across boundaries also must be coordinated.

- Task-organizes and allocates assets. On the basis of the commander's intent and the factors of METT-T, the corps commander can give the divisions added assets for detection and attack of Threat fire support. Most often, corps provides nondivisional FA delivery assets to augment div arty fire support capabilities. This can be done by either of the following actions:

  - Assigning an FA brigade a tactical mission such as reinforcing or GSR to a div arty.

  - Attaching the FA brigade to the division requiring augmentation. The FA brigade normally is then further attached to the div arty.

Normally, the corps commander retains the command relationship with the FA brigade. Thus, he can *keep a string on* corps delivery assets for future requirements and maintain a

capability to mass fires, when required. He may modify the seven inherent responsibilities of the assigned tactical mission of the FA brigade. The addition of an FA brigade to the division provides the following:

- An additional force artillery brigade-level C^2 headquarters.
- Additional target-processing capability.
- Increased firepower, typically with a mix of cannon and rocket battalions.

An FA brigade, however, does not bring with it additional assets to improve the TA capability of the division. When Firefinder Block III radars are issued to div arty TA units (mid-1990s), the displaced AN/TPQ-37 counterbattery radars could be given to FA brigade HHBs. With TA assets, FA brigades afford additional flexibility to the corps commander and a means of enhancing counterfire target acquisition capabilities when employed in support of a div arty.

Division Counterfire Responsibility

Typically, most of the *reactive* counterfire battle takes place within the division area of responsibility. Most of the Threat *active* fire support systems are located in this area.

The responsibilities of the division commander mirror those of the corps commander. Although his assets are fewer in number and variety, the division commander does have organic target acquisition, target processing, and delivery assets to conduct counterfire. The div arty commander, as FSCOORD for the division, is responsible for orchestrating the division counterfire effort.

When an FA brigade from corps artillery is available to the division, the div arty commander may assign it the counterfire role. Responsibility for the execution of the division counterfire effort, however, remains with the div arty commander.

Counterfire for Low-Intensity and Mid-Intensity Situations

During low-intensity conflict (LIC) or mid-intensity conflict (MIC), Threat fire support systems will likely be less modern and perhaps less extensive than friendly fire support capabilities. Nevertheless, the Threat commander will use his fires much as he would in a high-intensity environment. Most Threat systems will include mortars and towed howitzers. Typically, self-propelled systems and MRLs will be introduced as the level of conflict escalates. Host nation logistics bases, friendly laager areas, and main supply routes are all potential targets for Threat fire support.

Counterfire responsibilities and the planning and execution requirements for these situations are identical to those previously discussed. Friendly capabilities to detect and attack hostile systems and rules for engagement are the primary differences in LIC or MIC. The light force structure provides a more limited counterfire capability. Heavier forces, however, may also be employed in LIC and MIC situations.

Contingency operations responding to LIC or MIC situations could include heavy and/or light forces. The task organization provided by the JTF commander, manifested by contingency plans and the time-phased force deployment list, dictate where the responsibility for counterfire will be placed and how it will be fought.

NOTE: The counterfire planning sequence at all echelons uses the *decide-detect-deliver* methodology. These functions as implemented at corps and division are discussed below.

Corps Decide Function

Counterfire at the corps level begins with the corps commander's guidance to the corps

artillery commander (the FSCOORD). At this level, decisions are made to meet a specific commander's intent. The ultimate results are mission assignments and a task organization. The intent and planning guidance of the corps commander allow the corps FSCOORD, G3, and G2 to develop a restated mission and to begin planning the assignment of responsibilities and resources for counterfire to support potential courses of action. As a minimum, the corps commander's intent and planning guidance should include the following:

- Responsibility for specific portions of the battlefield.
- Allocation of available assets.
- Use of nuclear and chemical weapons.
- Priorities for protection of friendly elements and attack of enemy areas.
- Permission to execute before H-hour.
- Requirements for battle damage assessment.

Given the commander's planning guidance and intent, the corps plans and FS cells (including the FSCOORD, G3, G2, and other key staff) develop COAs and associated organizations for combat to support the intent. The *decide* function of planning orients the collection and target acquisition effort and specifies the commander's attack guidance for execution.

The G2 is a key staff officer to help plan and execute counterfire. He is best able to focus the intelligence collection power of the corps through the corps tactical operations center support element (CTOCSE). Within the corps artillery, the G2 and G3 make recommendations to the corps G2 to maximize the use of corps TA and intelligence collection assets. The factors of METT-T may dictate that division-level acquisition means (such as EW assets and Firefinder radars) be task-organized under corps control. Consistent with the corps commander's intent, the following must be carefully considered:

- Who will control the countefire fight.
- How these tasked assets will be returned in a timely manner to the divisions.

A key decision aid in the *decide* function for counterfire is the IPB, which includes the following:

- Situational templates to identify potential targets and to develop NAIs and TAIs.
- Decision support templates (DSTs) to provide windows of opportunity and to help identify the key decision points.
- Target value analysis to give the commander a cost-effectiveness analysis, which identifies the high-payoff targets. High-payoff targets focus both detection and attack assets against specific types of targets by templating, signatures, and vulnerabilities.

In addition to establishing boundaries and areas of responsibility, the corps commander can also use fire support coordinating measures to help delineate counterfire responsibilities. The corps can establish an FSCL, which expedites the attack of all targets forward of it by both surface and air-delivered fires. The establishment of an FSCL allows higher, adjacent, and lower headquarters to engage targets without coordinating with the establishing headquarters. Thus, a portion of the corps area of responsibility is free for the attack of targets by all players. The attack of targets beyond the FSCL by ground forces should, however, be coordinated with supporting TACAIR when possible. The primary consideration for the placement of an FSCL is that it should be located beyond the area in which the corps intends to shape its deep operations fight. However, the corps deep operations concept may not seek to shape the fight but may only focus on

maximizing the destruction of enemy units and/or systems. Then, the corps should establish the FSCL as close as possible to its close operations area. During offensive operations, the FSCL would be further away from friendly forces than during defensive operations. In either case, the FSCL should be placed on identifiable terrain and far enough from friendly ground maneuver forces that it does not restrict their ability to maneuver. The intent of the corps commander may be to free an area of the battlefield so that it can be expeditiously attacked by both corps and division cannon and rocket fire support systems. In that case, he should limit the depth of the division areas of responsibility and not establish a corps FSCL in an area he has allocated to a division.

The following conditions should be met before an FSCL is established by corps:

- There is a portion of the corps deep operations area in which selective targeting is not required to shape the deep operations fight.
- The expeditious attack of targets beyond the FSCL will support the operations of the corps, the attacking unit, or the higher headquarters of the attacking unit.
- The corps and its supporting units are willing to accept the possible duplication of effort which may result from dual targeting beyond the FSCL.

The *decide* function at corps is mirrored through subordinate echelons. The *decide* function of the counterfire planning sequence culminates with mission assignments and tasks to target detectors and shooters.

Corps Detect Function

Target acquisition tasks supporting the corps counterfire effort flow from the *decide* function and are issued in the corps collection plan.

The corps G2 and FS cell develop the target acquisition plan and organize sensor tasking and reporting. Specific requirements for organic collection assets and requests for

CORPS COUNTERFIRE ASSETS

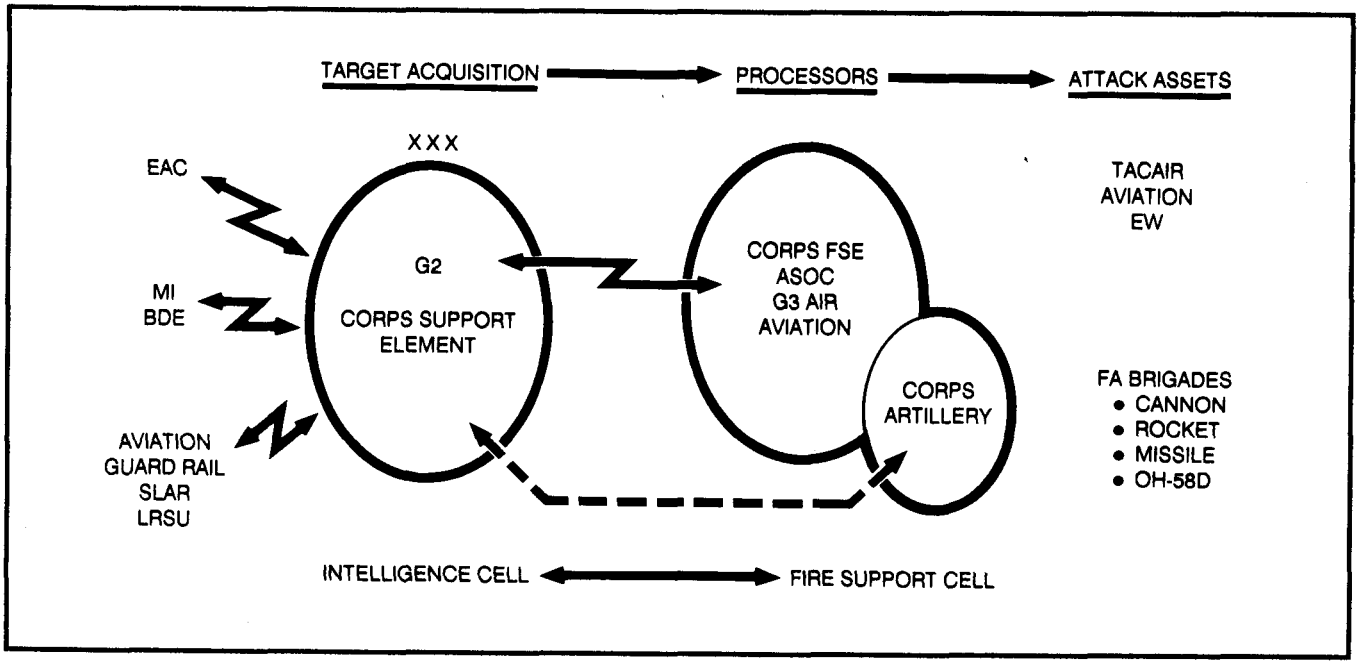

nonorganic assets are included in the corps collection plan. The corps FAIO located in the CTOCSE ensures that the MI brigade assets (ASPS and EWS) understand both accuracy and time requirements to produce valid targets. The corps artillery G2 and G3 coordinate closely with the corps G2, FS cell, and FAIO to determine when selected sensors will shift their priority from intelligence gathering to target production. This shift in effort should be indicated on the corps decision support matrix and keyed to specific events on the battlefield. The corps artillery G2 also coordinates with the corps G2 and FS cell to ensure his PIR for the acquisition and attack of enemy fire support assets are included in the corps collection plan.

The processing and developing of targeting information from nonorganic corps assets must be streamlined. The collection and target acquisition process must also provide for assessment of target damage.

During the corps mission analysis and command estimate process, the need for additional sensor assets may be identified. One source for additional sensors which would be under the direct control of the corps commander and his staff is the reserve divisions. The EW and TA assets organic to a reserve division could be used to support the corps counterfire effort or to augment the capabilities of a committed division. One way to do this is to task-organize the reserve division acquisition assets (such as Firefinder radars, EW assets, and OH-58Ds) and assign them a tactical mission such as GS to the corps or GSR to a committed div arty. Care must be taken, however, to ensure these assets will be available to the reserve division when it is committed.

EXECUTION OF COUNTERFIRE AT CORPS

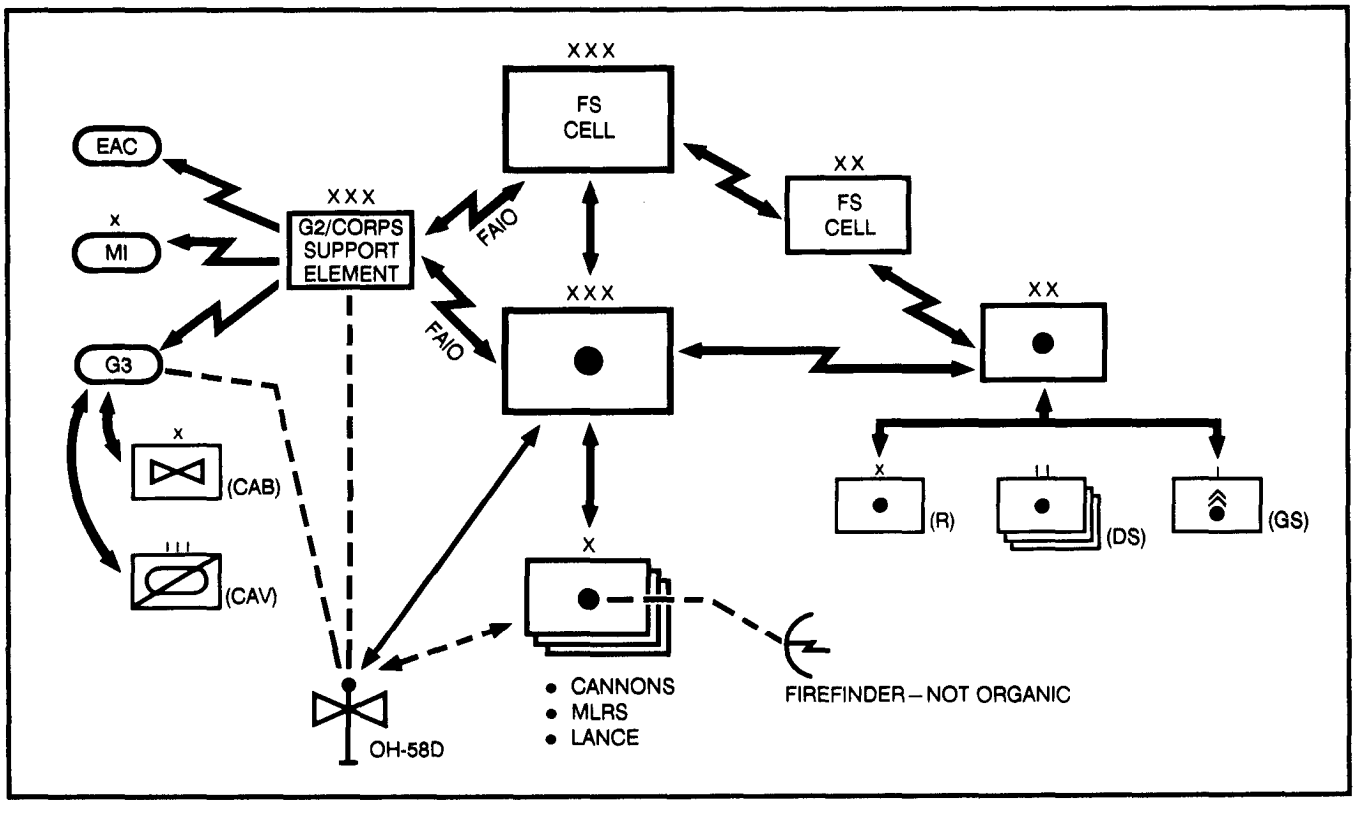

Corps Deliver Function

The *deliver* function for counterfire executes the acquisition and attack guidance of the commander. The attack of counterfire targets must feature streamlined target processing and violent, massed fires.

The FAIO located in the CTOCSE facilitates transmittal of timely targeting information to the FS cell and/or the FA headquarters controlling the counterfire fight. He also gives CTOCSE personnel the accuracy and timeliness requirements for friendly attack of targets.

The FS cells process targets by matching target defeat criteria, commander's attack guidance, and attack system capability. The corps FS cell attacks counterfire targets by—

- Using cannon, rocket, and missile assets of corps FA brigades assigned a GS or GSR mission.
- Providing the corps G3 air target locations and desired effects for TACAIR packaging.
- Coordinating with the G3 for attack with corps aviation and/or EW assets.
- Forwarding counterfire targets via fire support channels to subordinate divisions for attack.
- Providing targets to adjacent corps for attack.

Division Decide Function

The *decide* function for counterfire at division mirrors that at corps. Priorities are established, combat assets are allocated, and tasks are specified to best meet the commander's intent.

The division FSCOORD, G2, and G3 develop and recommend the following:

- Target priorities for acquisition. They coordinate with the EWS for EW target acquisition.
- High-value targets and priorities.
- Target selection standards for accuracy and timeliness.
- Decision points and time lines for execution.
- Fire support coordinating measures to expedite the attack of counterfire targets consistent with the commander's intent (for example, CFLs and boundaries).
- Requirements for target damage assessment.

The centralization of assets under a single command and control headquarters is a key aspect of an effective counterfire effort. Normally, during offensive operations fire support assets are more decentralized than in the defense. However, if the commander's METT-T analysis determines that counterfire will be a major factor in the battle, he may opt for a more centralized organization for combat even for an offensive operation. This translates to the assignment of fewer reinforcing missions to available fire support assets in favor of more GSR missions. In accordance with the seven inherent responsibilities associated with the tactical mission of GSR, the force artillery commander retains first priority for calls for fire and positioning authority over a unit with the GSR mission. This gives the headquarters controlling the division counterfire effort both the assets and the flexibility to effectively conduct the counterfire effort. The commander's intent and priorities for detection and attack of Threat fire support are documented in the fire support appendix of the OPORD.

Division Detect Function

Responsibilities

The division G2 is responsible for developing and implementing the division collection and target acquisition plan. This plan identifies the tasks MI assets must perform to support the maneuver and fire support plans developed by the FSCOORD and G3. The G2 also

coordinates with the div arty on how artillery TA assets can be used to support the overall plan.

Agencies Involved

Generally, within the division, intelligence flow and target detection involve several agencies.

G2. The G2 focuses the overall collection and target acquisition effort for the division. He coordinates with div arty for the support of its acquisition assets.

Military Intelligence Battalion. The MI battalion TOC and its TCAE are the central point for data collection from both DS and GS intelligence assets. They are the link to the corps MI brigade.

Division Tactical Operations Center Support Element. The division TOC support element (DTOCSE) gives the division access to sensitive compartmented information. The division FAIO is in the DTOCSE. He can transmit perishable or time-sensitive targeting data to either the FS cell or the artillery headquarters controlling the counterfire battle (div arty or a supporting FA brigade) while providing location accuracy requirements to collection assets. To know where to send information, the FAIO must know what information or targets must be processed by the FS cell for attack by other than FA assets and what targets are to be engaged by the FA. The use of the attack guidance matrix developed during the command estimate process is essential to providing the FAIO this information.

Electronic Warfare Staff Officer. The EWSO helps the DTOCSE translate mission guidance for EW systems under division control.

Air Liaison Officer. The ALO provides current capabilities and status of Air Force assets.

Division Artillery S2. The div arty S2 has staff responsibility for the division target acquisition battery assets. He is aided by the counterfire officer and the target production section. They recommend positioning, target coverage and/or changes in coverage, and organization for combat for the div arty TA assets. The div arty S2 must coordinate the radar target acquisition plan as discussed below.

Command and Control. The div arty has several possible options for the employment of its radars:

- It can keep them centralized with all assets reporting information to a central headquarters (div arty or a supporting FA brigade). The same headquarters would also control and coordinate positioning and zones of search for the radars.
- It can attach assets to subordinate units. Thus, the subordinate unit can establish reporting procedures and coverage requirements and can position the attached asset (for example, attach an AN/TPQ-36 radar to a DS battalion).
- It can use a combination of the above. For example, it can retain the AN/'TPQ-37s or AN/TPS-25s or -58s under div arty control and give command and control of (attach) the AN/TPQ-36s to the DS battalions.

> NOTE: Regardless of which option the div arty chooses, the radars should be attached to a subordinate headquarters for survivability and logistical support.

Positioning Considerations. Both tactical and technical aspects of positioning must be considered.

Zones of Search. Search zones prioritize the search pattern and provide the reaction posture of the radars to best meet the maneuver commander's intent and priorities. Each Firefinder radar can store up to nine different zones. There are four different types

of zones used with the radar. Those types and their functions are as follows:

- Critical friendly zone (CFZ). The CFZ designates the highest priority friendly locations of the maneuver commander and provides the most responsive priority of fires from the radars. Cued radars detecting incoming rounds into this zone immediately generate a priority request for fire. FSCOORDs recommend to maneuver commanders positioning of CFZs and their size for best responsiveness. Typical CFZs include maneuver assembly areas, headquarters, forward arming and refueling points (FARPs), and other troop concentrations,
- Call-for-fire zone (CFFZ). The CFFZ designates a search area beyond the FLOT that the maneuver commander wants suppressed or neutralized. The CFFZ designation is closely tied to the IPB process. A CFFZ would likely be a suspected RAG or DAG position. The CFFZ provides the second most responsive priority for fires from the radar.
- Artillery target intelligence zone (ATIZ). An ATIZ enables a maneuver commander to watch an area closely while assigning higher priority to more important areas. Targets identified in this zone will be evaluated for attack as received but will not automatically generate a fire mission.
- Censor zone (CZ). A CZ is used to designate areas from which the commander does not want to attack targets. This zone is often used to avoid overlap and duplication.

Zone Management. Zone management must support the maneuver commander's intent, The key to zone management is the coordination of zones among adjacent radars to provide both optimum detection and priority for attack. Zones are assigned to individual radars according to how the div arty has organized its assets for combat:

- Radars under the operational control of div arty. Div arty designates specific zones for each radar. In some instances, all division radars may be assigned the same nine zones. A specific zone may be designated on request from a subordinate maneuver commander or for the support of the division as a whole. The division may also have some zones either designated by the corps commander or shared with adjacent divisions.
- Radars under the operational control of the close support battalions. To coordinate all coverage within the division, the div arty may still designate all or a portion of the zones for these radars. Zones may also be assigned independent of other division radars to reflect the protection priorities of the supported maneuver commander.
- A combination of the above.

Establishment of Communications. Firefinder radars have the capability for two FM nets, one of which is digital. The digital net can be used to pass information either to the counterfire headquarters by use of the target acquisition/intelligence net (digital) or to a controlling FA battalion FDC by use of a fire direction (FD) (digital) net. The FM voice net can be used to pass information either on a command net or on an FD net.

Radiate Time. Threat EW activity considered with mission requirements will dictate cumulative radiation time before survivability moves are required. FM 6-121 provides a radiation time survivability chart. In some LIC or MIC situations where no counterradar threat exists, radars could conceivably radiate continuously. Commanders should decide, and radar technicians should closely monitor, radiation times and movement requirements,

Cueing. One of the most difficult planning factors is the determination of when and how to best cue the radar for activation. The counterfire headquarters must establish cueing guidance for radar sections. Both authority to

cue and priority for cueing requirements must be clearly understood. Planned cueing schedules are normally ineffective. Therefore, cueing guidance should specify the cueing agent and the radar section to which he is linked (to include C^2 and communications) and should establish the specific conditions for activating the radar. The cueing scheme should be included in rehearsals. Key personnel for cueing include FSCOORDs, FSEs, cueing agent(s), S2s of radar-controlling headquarters, and the radar section(s).

Fire Support Coordinator. The FSCOORD recommends to the maneuver commander designation and activation of CFZs based on mission and intent. The S2 must know where CFZs are and their effective times.

Fire Support Element. FSEs coordinate communications links among cueing agents located in the CFZs, radars, and attack assets.

Cueing Agents. Cueing agents maintain communication with radars and establish internal alert procedures within the CFZ with the maneuver commander.

Radars. Radars respond to requests from cueing agents and generate requests for fire.

Coordination

Coordination of zones among adjacent radars provides both optimized detection and priority for attack. Coordination of cueing guidance and search zones is a dynamic process that must be closely tied to both operations planning and target acquisition. Successful management of these assets by the counterfire headquarters is as critical to fire support success as the positioning of attack assets and firing positions.

Division Deliver Function

The FSCOORD and division G3 supervise the execution of counterfire within the division. The division FS cell coordinates and monitors the execution of counterfire through—

- The div arty S3 for all cannon and rocket systems available to the division.
- The ALO for allocated TACAIR support.
- The division aviation officer for employment of attack helicopter battalions.
- The DTOCSE for EW support.

The div arty S3 plans the execution of the field artillery portion of the fire support plan. The MLRS battery is the only organic GS shooter available for attack at depth, counterfire, and reinforcement of close operations. Therefore, the div arty will normally require additional assets.

Assignment of Division Counterfire Role to a Field Artillery Brigade

Assignment of the counterfire role to an FA brigade reinforcing a div arty is appropriate. The div arty commander as the division FSCOORD, however, remains responsible for all division fire support, to include counterfire. Div arty must ensure the FA brigade has adequate personnel and materiel resources for counterfire. The TAB personnel should go with the radar assets to the FA brigade for C^2 and employment expertise.

FA brigades require both TA assets and additional processing capability to effectively perform counterfire. Closely linked to division maneuver through the FS cell, the FSCOORD and div arty S3 must provide and coordinate the following for the FA brigade:

- Command intent for counterfire, to include required zones and cueing guidance.
- Intelligence support from division-controlled assets. Counterfire targets from MI battalion assets, div arty ATI files, and higher headquarters must be expeditiously forwarded to the FA brigade.

EXECUTION OF COUNTERFIRE AT DIVISION

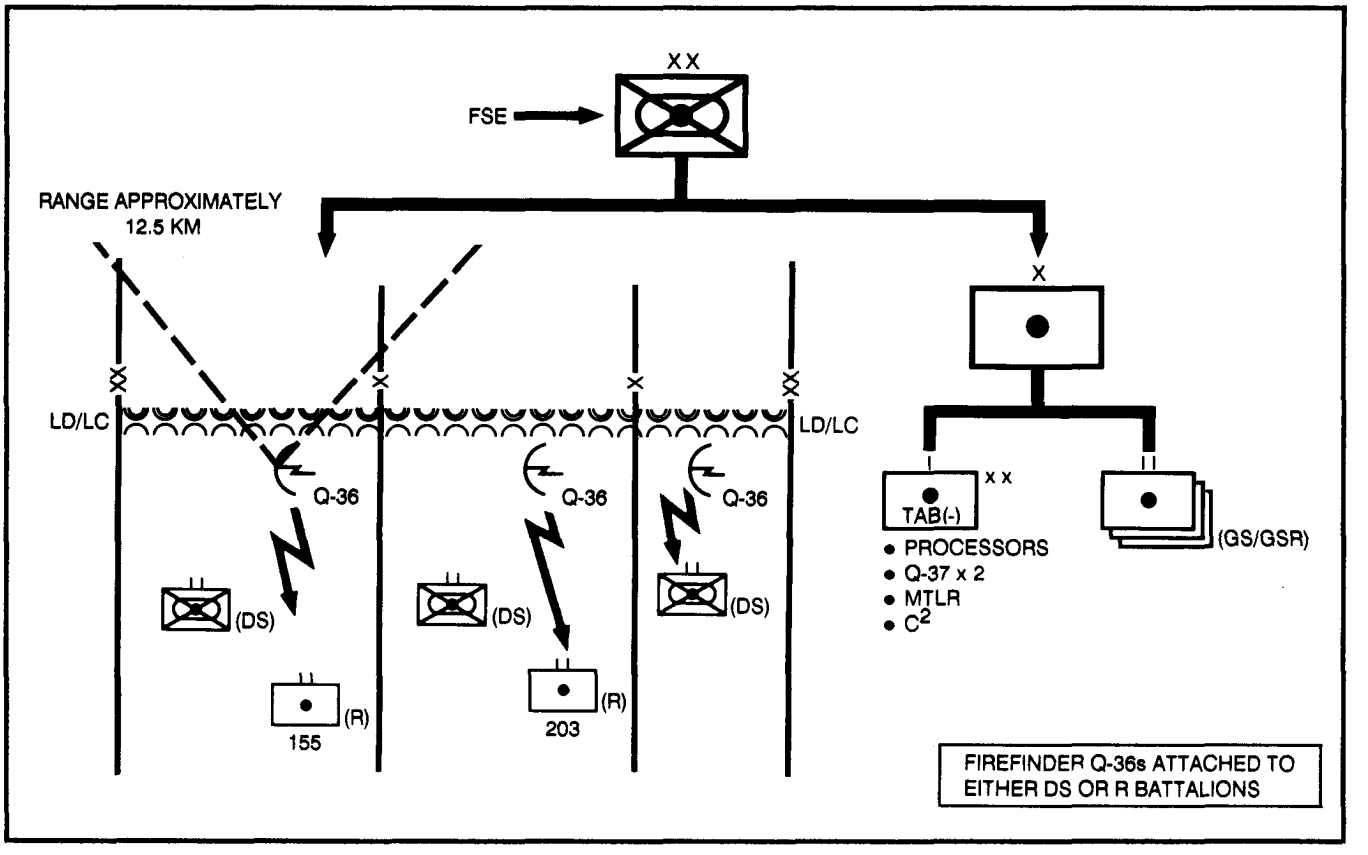

- Land management issues and position areas for FA brigade battalions and acquisition assets forward in the division area.
- Traffic and movement priorities for units and ammunition.
- Ammunition forecasts and other service support requirements. Often, FA brigades have equipment not normally found in the division; for example, in 203-mm (8-inch) battalions. Requirements for special maintenance or ammunition must be coordinated.
- Survey and met support for FA brigade units.

In a heavy division, an automated (digital) capability must be provided to nonautomated FA brigades to maximize communications with the Firefinder radars and the div arty TOC. If available, div arty should provide either a VFMED with operator or a digital message device (DMD) to the FA brigade.

Employment of Target Acquisition Assets

The div arty target acquisition effort is managed by the div arty S2 and is coordinated with the division G2 and FSE. Div arty acquisition assets must support the corps effort and the intent of the division commander.

The div arty S2 recommends an organization for combat of TA assets to best meet the division and corps commanders' requirements. Firefinder radars can be—

- Centralized at div arty or at the FA brigade.

- Decentralized by attachment to a close support battalion. Control of radars by a reinforcing battalion, when available, allows the brigade FSCOORD to better manage his assets in support of the brigade battle.

- A combination of the above.

Centralized control enhances responsiveness, increases survivability, and guarantees the optimal coverage to support the division commander's intent. It is recommended when the IPB indicates a high counterfire threat. In vague situations or lower threat environments, assets may be more decentralized.

When Firefinder radars are attached to close support battalions, they are controlled by either the direct support or reinforcing battalion S2. Normally, the AN/TPQ-37 radars and the MTLRs are retained centrally. Options for the command and control of the AN/TPQ-36 and AN/TPQ-37 radars are shown below.

RADAR COMMAND AND CONTROL OPTIONS

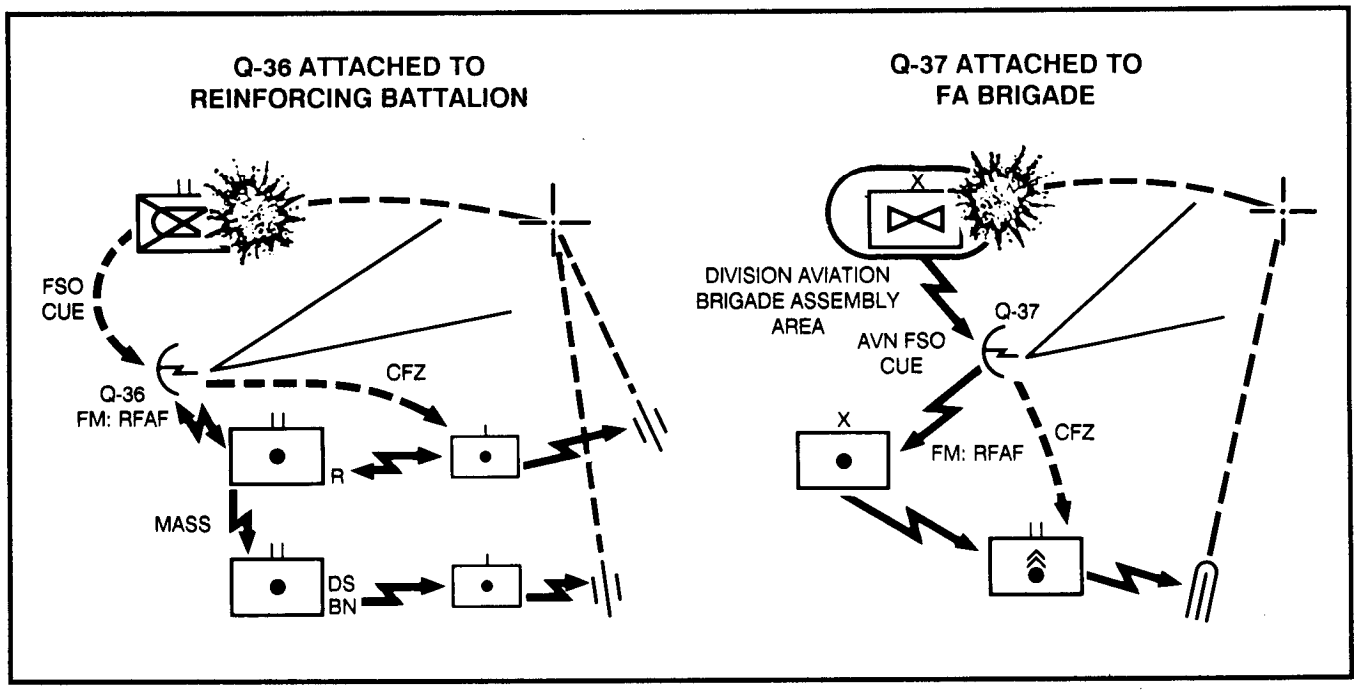

How a division or brigade commander and his FSCOORD plan to defeat Threat mortars must also be considered in determining how acquisition radars will be employed. The AN/TPQ-36 radar was primarily designed as a countermortar radar. It is the choice for locating enemy mortar units because of the ballistic trajectory of the mortar and the close proximity of the radar to the FLOT. Regardless of whether the radars have been operationally centralized or decentralized, the division AN/TPQ-36 radars must be linked to a shooter for mortar targets. This shooter most likely will be the close support battalion; however, in certain situations, we may want to link the radar to a task force (TF) mortar platoon. Given the inherent ballistic trajectories of mortars, friendly artillery may have to shoot high-angle fires to engage enemy mortar positions. This makes the artillery unit much easier to detect. Although strictly dependent on the maneuver commander's guidance and the situation, friendly mortars engaging Threat mortars may often be the best answer to how we should conduct countermortar operations.

Division Artillery Support Platoon

The heavy div arty is currently authorized six OH-58D systems. A key divisional asset, the OH-58D system is employed to best support the division commander's intent. The capabilities of this system make it an effective combat multiplier for counterfire within the division.

The OH-58D can help locate and designate Threat artillery for attack with precision guided munitions fired from cannon, aviation, or Air Force assets. The OH-58D is most effectively employed at night or in inclement weather. With a planning range of 10 km for its mast-mounted sights, this valuable asset may be particularly useful for proactive counterfire by detecting Threat fire support systems before they fire. In some situations, this system could conceivably detect and designate accompanying artillery, RAGs, and possibly DAGs without crossing the FLOT. Operations forward of the FLOT demand careful consideration and normally require packaging with other Army aviation or Air Force assets as well as SEAD for survivability.

Examples of Organization for Combat

As previously discussed, there are numerous ways in which field artillery can be organized to support the counterfire effort. (Remember, counterfire is only one consideration when organizing for combat to support the corps or division total mission.) The following examples illustrate one way to organize for combat. The organization for combat is based on the commander's intent and available assets for each scenario.

LEGEND FOR EXAMPLES

AFSOUTH = Allied Forces Southern Europe
CENTAG = Central Army Group
COMAFSOUTH = Commander, Allied Forces Southern Europe
CTAD = corps target acquisition detachment
NATO = North Atlantic Treaty Organization
PADS = position and azimuth determining system
PDRA = People's Democratic Republic of Atlantica
PGB = precision guided bomb
PNRM = People's National Revolution Movement
POMCUS = pre-positioning of material configured to unit sets
R = reinforcing
SSM = surface-to-surface missile
TARC = target acquisition reconnaissance company
TPFDD = time phase force development data
TPS = target processing section
TVD = Theater of Military Operations (Soviet)

EXAMPLE 1: 10TH (US) CORPS COUNTERATTACK

General Situation: 10th (US) Corps has been defending in place in a European theater for about 14 days. The NATO defense has temporarily stalled the Threat attack. 10th (US) Corps leads a CENTAG counterattack to sever the LOCs between the first and second operational echelons of the Threat front.

The 10th (US) Corps defends with two divisions forward—23d Armd in the north and 52d Mech in the south. 53d Mech Div has been the corps reserve.

54th Mech Div and 25th Mech Div are POMCUS divisions currently located in assembly areas forward in the corps rear. The corps commander has decided to attack with a course of action which features two divisions attacking—54th Mech the main effort in the north to seize Objective SHATZ and 53d Mech in the south to seize Objective BASS. 25th Mech Div follows and supports 54th Mech Div; then it becomes the main effort and continues the attack to seize Objective QUAIL vicinity HANNOVER. 23d Armd Div follows and supports 25th Mech Div. 53d Mech Div becomes corps reserve.

10th (US) Corps Counterattack

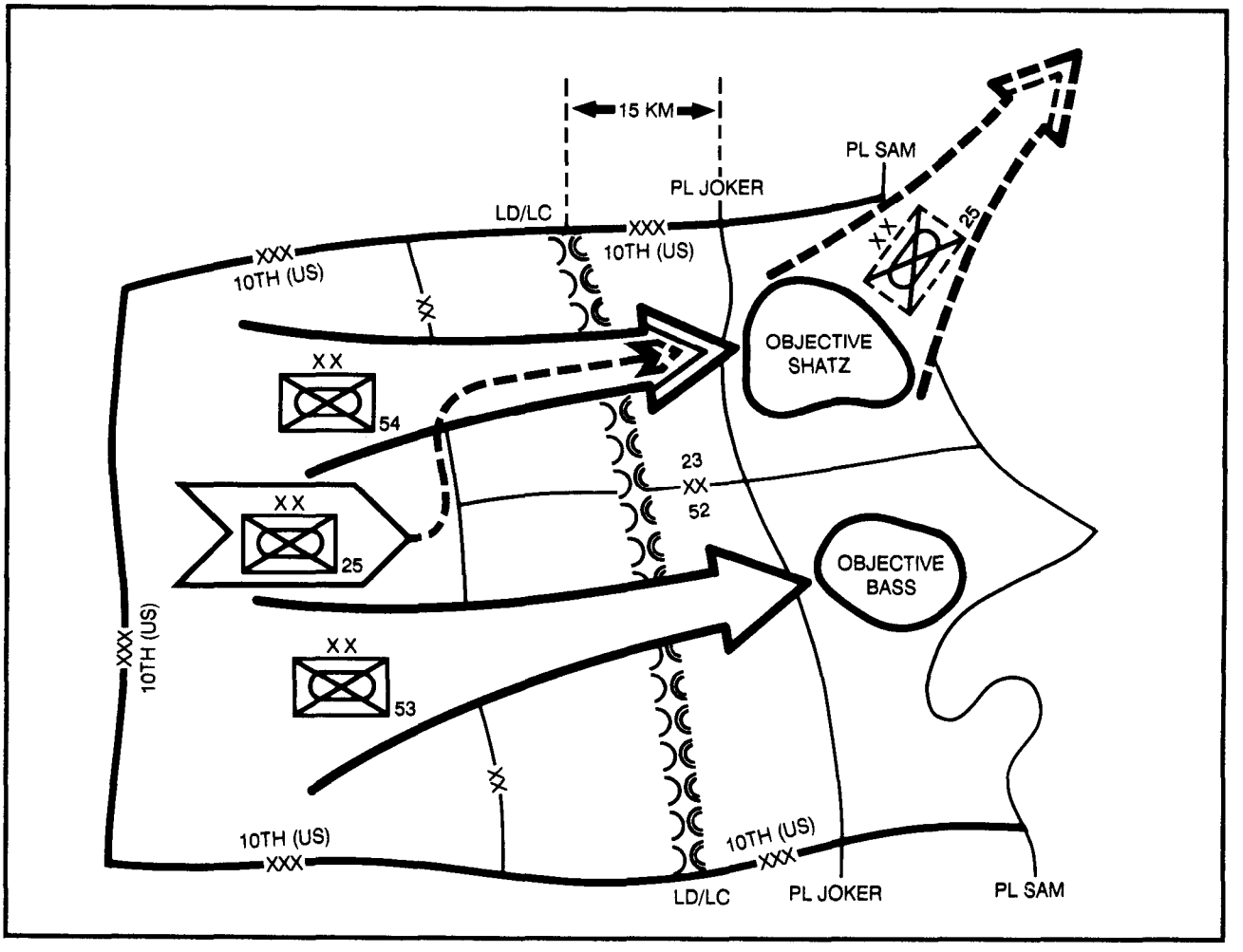

EXAMPLE 1: 10TH (US) CORPS COUNTERATTACK (CONTINUED)

Mission: 10th (US) Corps attacks in zone to defeat the 1st Guards Tank Army. Exploits northeast toward HANNOVER (ND5000), HILDESHEIM (NC6080), and SALZGITTER (NC9080) to interdict LOCs of the 2d Western and Northern Fronts; prepares to block reinforcement by follow-up echelon to facilitate the defeat of the eastern TVD.

The corps fire support troop list includes the following:

68th FA Bde	69th FA Bde	70th FA Bde
1-206 FA (Lance)	1-207 FA (Lance)	2-607 FA (203)
2-608 FA (203)	2-606 FA (203)	2-610 FA (203)
2-609 FA (203)	2-636 FA (155)	2-637 FA (155)
2-675 FA (MLRS)		

The corps commander provided his intent for the role of fire support during the first phase of the corps attack as follows:

". . . the priority role for our fire support systems initially will be to protect maneuver elements of the attacking divisions from Threat indirect fires as they move from assembly areas to initiate the attack. FSCOORD and G3, I want the committed divisions augmented to neutralize at least 60 percent of the RAGs and DAGs in their zone before the attacking divisions move out of the assembly areas. Corps should be prepared to help with counterfires in our northern sector, as this is my priority area for protection and it appears to have the heaviest concentration of enemy fire support systems. We have to be proactive in our counterfire effort. Key PIR are where and when the front second-echelon fire support will be committed. G2, focus our collection efforts and put the MI brigade to task on this. Get me some targets our fire support assets can shoot now. G3 and FSCOORD, be proactive and get our OH-58Ds as well as those of the divisions working to find AAGs and MRLs. Package this with air using PGBs. FSCOORD, keep at least one FA brigade with an MLRS battalion that we can use to protect the forward assembly areas of the aviation brigade and weight the attack. Consider bringing the acquisition assets of the trailing divisions up to corps to use with our FA brigade. This may help confuse the enemy that we are attacking with three divisions on line."

On the basis of the commander's guidance and available assets, the FSCOORD recommended the following organization for combat for the initial attack:

25th Mech Div	52d Mech Div	53d Mech Div
25th Mech Div Arty (-)	52d Mech Div Arty	53d Mech Div Arty

54th Mech Div	23d Armd Div	10th (US) Corps Artillery
54th Mech Div Arty	23d Armd Div Arty	68th FA Bde: GS
70th FA Bde (attached)		69th FA Bde: R 53d Mech Div Arty

Coordinating instructions are as follows:

- 69th FA Bde reinforces 53d Mech Div Arty effective H - 24. Authority to subassign missions, except direct support, to subordinate cannon battalions authorized.
- 68th FA Bde general support.
- 25th Mech Div attach 25th TAB (minus AN/TPQ-36s and MTLR) to 68th FA Bde until NLT H + 6.
- 68th FA Bde receive attachment of 25th TAB (-) at H - 24. 25th TAB (-) returned to 25th Mech Div NLT H + 6.
- Corps FSCL is PL SAM.

EXAMPLE 2: 30TH (US) CORPS RELIEF IN PLACE

General Situation: 30th (US) Corps has been conducting operations in a European theater for almost 2 months. 4th (US) Corps (Light) arrived in theater at D + 30 and was assigned to AFSOUTH. 4th (US) Corps consists of a corps headquarters, one light infantry division, one airborne division, and three FA brigades. COMAFSOUTH has decided to use 4th (US) Corps to relieve 30th (US) Corps in place. His intent is to maintain a defensive line by having the light corps units establish a series of strongpoints in the heavily forested and urbanized areas of AFSOUTH while 30th (US) Corps withdraws to the rear to reconstitute and then prepare for AFSOUTH counterattack on D + 35.

Mission: 4th (US) Corps relieves 30th (US) Corps in place in sector vicinity (XXXXXX) NLT 290600Z April 1989 to maintain the main defensive line for AFSOUTH and facilitate future AFSOUTH counterattack. 4th (US) Corps defends in sector with 19th Inf Div (L) in the north as the main effort and 20th Abn Div in the south.

30th (US) Corps Relief in Place

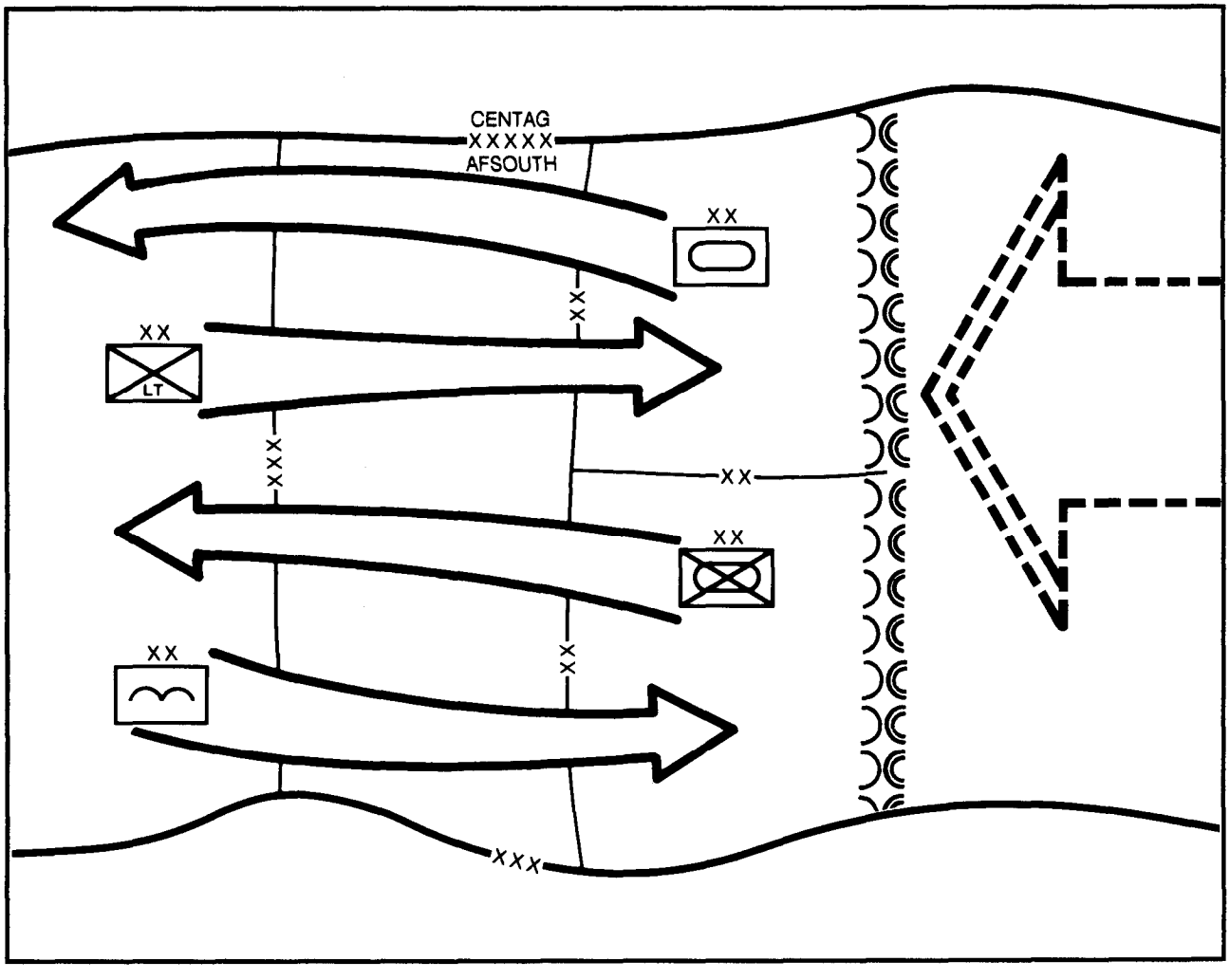

EXAMPLE 2: 30TH (US) CORPS RELIEF IN PLACE (CONTINUED)

4th (US) Corps fire support troop list includes the following:

19th Inf Div (L)
- 19th Inf Div Arty (L)
  - 105 DS battalions (3)
  - M198 GS battery (1)

20th Inf Div (Abn)
- 20th Inf Div Arty (Abn)
  - 105 DS battalions (3)

4th (US) Corps HHB
- TARC (with 12 OH-58Ds)
- AFSOs (12)
- CTAD (2)

313th FA Bde
- 3-1 FA (M198)
- 3-2 FA (M198)
- 3-3 FA (M198)

314th FA Bde
- 4-1 FA (M198)
- 4-2 FA (M198)

315th FA Bde
- 5-1 FA (M109)
- 5-2 FA (M109)
- 5-3 FA (M110)

The 4th (US) Corps commander's intent for fire support is as follows:

" . . . to put the corps heavy fire support assets in early to take maximum advantage of existing targeting information, survey control, and firing position areas. 30th Corps fire support assets have been reduced to 30 percent strength by the Threat heavy MRL and helicopter attacks. At 30 percent, they are not able to protect our forces during that vulnerable period as the relief takes place. Both the 30th Corps commander and I are most concerned with Threat indirect fire attacks against our maneuver force positions, aviation assembly areas, and FARPs during relief operations. 4th Corps headquarters will initially direct the counterfire effort until its divisions have been able to get into place, dig in, and establish C^3."

On the basis of the commander's intent and available assets, the FSCOORD recommended the following organization for combat for 4th (US) Corps:

19th Inf Div Arty (L)
- 105 FA battalions (3)
- M198 battery (1)

20th Inf Div Arty (Abn)
- 105 battalions (3)

4th (US) Corps Artillery

313th FA Bde: GS; O/O R 19th Inf Div Arty (L)
- M198 battalions (3)
- AFSOs (4) (OPCON)
- CTAD (attached): O/O attached 19th Inf Div Arty (L)

314th FA Bde: GS; O/O R 20th Inf Div Arty (Abn)
- M198 battalions (2)
- AFSOs (4) (OPCON)

315th FA Brigade: GS
- M109, 155 battalions (2)
- M110, 203 battalion (1)
- AFSOs (4) (OPCON)
- CTAD (attached): O/O attached 20th Inf Div Arty (Abn)

Coordinating instructions are as follows:

- 4th (US) Corps directs counterfire effort by using three FA brigades at H - 12 to H + 12.
- Two CTADs remain attached to corps FA brigades until 19th Inf Div Arty (L) and 20th Inf Div Arty (Abn) are ready to direct counterfire in zone (H + 12).
- To weight the corps main effort, four AFSOs OPCON to 315th FA Bde will become OPCON to 314th FA Bde when it reinforces 20th Inf Div Arty (Abn).

EXAMPLE 3: 27TH AIRBORNE CORPS DEPLOYMENT TO CORTINA

Situation: The Republic of Cortina has been a democratic state since 1975 and aligned herself with the Western democracies. The oil glut of the mid-1980s has shaken the economy, and a strong Marxist insurgent group gained a foothold within Cortina. This group, called the People's National Revolution Movement (PNRM), has successfully solicited the support of the People's Democratic Republic of Atlantica (PDRA), a known aggressive communistic state. The PDRA army is led by Cuban officers and has combat power equivalent to that of a Soviet motorized army force. Equipment available to the PDRA includes late 1970s vintage armored and mechanized vehicles as well as several battalions of towed and self-propelled artillery. To date, no Threat MRLs or SSMs have been observed. Several brigade-level attacks and skirmishes have occurred. The current situation is extremely volatile, although no official war declaration has been made by either side. The president of Cortina has requested United Nations, specifically US, military support as soon as possible to help stabilize the situation to save his country.

In response to this request for assistance, the 27th Abn Corps was alerted to begin deployment of corps units within 72 hours. TPFDD flow is expected to take 60 days. Corps will not close in Cortina until D + 60.

Mission: 27th Abn Corps will air-deploy to Cortina, vicinity NBXXXXXX, NLT 300100 April 1989 and be prepared to conduct military operations to stabilize the political situation and safeguard the democratic government of Cortina.

27th Abn Corps fire support troop list includes the following:

44th Abn Div Arty
- 105 DS battalions (3)

46th Abn Div Arty
- 105 DS battalions (3)

77th Mech Div Arty
- M109 DS battalions (3)
- MLRS battery (1)
- AFSOs (6)

27th Corps Arty
- 27th FA Bde (Abn)
  - M198 battalions (3)
  - MLRS battalion (1)
  - CTADs (2)
    - AN/TPQ-37 radars (2)
    - MTLR (1)
    - TPS (1)
    - PADS (1)

The corps commander's intent for fire support for the operation is as follows:

" . . . First of all, we once again have the dilemma of packaging our combat power based on available lift assets. The corps will need several days to position our combat assets into Cortina. My intent is to go in with the airborne divisions first and put them to ground and hold the mechanized division in reserve until we can develop the situation. As vague as the enemy situation is, it appears that the Threat fire support system consists primarily of towed cannons with no MRLs; and I do not consider it, in itself, a major threat to our initial operation. I consider the division artilleries capable of handling the situation with their CTAD plus up. G3, for safe measure, look at the IPB and our order of march in Cortina; and give our main-effort division quick access to the fires of our M198 airborne battalion as soon as we can get them on the ground. Positive clearance of fires in theater is a must according to Cortina's rules of engagement; no unobserved fires. By the way, I consider the Firefinder an observer. Once corps artillery is operational, it will pick up a more proactive counterfire role and focus some of our air to attack the PDRA fire support systems at depth."

EXAMPLE 3: 27TH AIRBORNE CORPS DEPLOYMENT TO CORTINA (CONTINUED)

The corps staff has developed a course of action that supports the commander's intent.

44th Abn Div, the main effort, will go into the north as the corps lead element. 46th Abn Div will follow into the south. The G3 will lift the 2d Bn, 133d FA (Abn, M198) to provide greater range as well as increased antitank capability. The mechanized division and remaining corps troops will follow.

On the basis of the corps commander's intent and the available assets, the FSCOORD recommended the following organization for combat:

44th Abn Div Arty (+)
- 2-133 FA (Abn)
- CTAD

46th Abn Div Arty (+)
- CTAD

77th Mech Div Arty

27th Abn Corps Arty
- 27th FA Bde
  - M198 battalions (2)
  - MLRS battalion (1)

Coordinating instructions are as follows:

- 44th Abn Div prepare to receive attachment of four AFSOs from corps.
- 2d Bn, 134th FA (M198) reinforce 77th Mech Div Arty O/O.
- 77th Mech Div Arty is responsible for rear area fire support.

Section V. SUPPRESSION OF ENEMY AIR DEFENSES

Description

The effective employment of air assets in the AirLand Battle gives the force commander a powerful source of fire support. Army aviation and the air platforms of other services, particularly the Air Force, enable the ground commander to quickly influence the close and rear operations and to add depth to the battlefield.

Requirement for SEAD

The availability of fire support from air assets also gives the force commander the corresponding responsibility to protect those assets. This obligation is significant in view of the increasingly sophisticated threat that faces US forces across the spectrum of warfare.

Advances in technology and force structure increases have given Soviet forces, and Soviet client forces, the capability to field integrated air defense networks stronger than anything previously encountered by friendly air forces. These networks, consisting of weapon systems, radars, and C^2 nodes, present a formidable all-altitude protection umbrella.

The most efficient enemy air defense systems will be on the high-intensity battlefield. However, enemy air defense capabilities in mid- and low-intensity environments pose a significant threat to US air assets. To facilitate AirLand Battle doctrine, friendly air assets must be able to survive to contribute their full combat potential. Therefore, SEAD is a critical function, which must be accomplished quickly and efficiently.

SEAD operations must be synchronized with all elements of the fire support system and with all members of the joint and combined arms team to produce maximum combat power. Unity of effort is essential in this endeavor. Synchronization of all fire support requires detailed planning and coordination and precise timing. The synchronization of fire support directed against enemy air defense is especially critical and exceedingly difficult.

The degree of criticality of a given SEAD operation, as of any other operation, must depend on the force commander's perception of the factors of METT-T. For example, the relative worth of enemy air defense targets in terms of high payoff varies in accordance with the need to commit air resources. A specific enemy air defense target may always be considered a high-value target. However, the advisability of attacking such a target must be weighed against constraints affecting the allocation and distribution of fire support assets. Actions against Threat air defenses that are not engaged against friendly air assets may not render a high payoff when ammunition expenditures are considered. However, the key point is that once the force commander decides that a specific air operation is necessary to accomplish his mission, the fire support system must be fully able to perform SEAD.

Conduct of J-SEAD

To maximize aircraft survivability, the US Army and Air Force have developed procedures for conducting J-SEAD operations against enemy surface-to-air systems. Most of the SEAD operations conducted at corps and division will be of a joint nature involving Army, Air Force, or another service. Therefore, the scope of the discussion on attacking enemy air defenses will include J-SEAD. However, the fire support system can perform SEAD when the Army is operating independent of Air Force support. For additional information, refer to TACP 50-23/ TRADOC TT 100-44-1.

SEAD Categories

Campaign SEAD

Campaign SEAD operations are preplanned, theaterwide efforts conducted concurrently over an extended period against air defense systems that normally are located well behind enemy lines. They are designed to systematically attack the enemy's critical air defense facilities, systems, and C^2 nodes to reduce his overall air defense capability. This includes establishing target priorities, aligning suppression assets with specific targets, and positioning these assets to effectively engage those targets. Primarily, campaign SEAD operations are executed by Air Force suppression assets. Army participation in campaign SEAD operations is limited. However, long-range surface-to-surface weapons and EW systems are used to complement Air Force capabilities. At the same time, Army forces conduct the localized and complementary categories of SEAD to support SEAD campaigns. The overall responsibility for campaign SEAD rests with the air component commander.

Localized SEAD

Localized SEAD increases the effectiveness of combat operations by protecting friendly aircraft. It allows aircraft to fly in the low and medium altitudes while operating within the engagement envelopes of enemy air defense systems. Localized SEAD supports CAS and Army aviation operations, reconnaissance activity, and the establishment of corridors for Air Force and Army aviation missions. The Army coordinates localized SEAD operations with the Air Force through the ASOC when supporting CAS aircraft and through the BCE when supporting other Air Force missions such as AI. Localized SEAD operations are confined to geographic areas associated with

ground targets that will be attacked from the air.

Complementary SEAD

Complementary SEAD involves a continuous process of seeking enemy air defense system (EADS) targets and attacking them, thereby reducing the enemy's overall capability. Complementary SEAD is an unstructured campaign to degrade the enemy's air defense capability. It is conducted throughout the battle area independent of specific aviation missions. This differs from campaign or localized SEAD, in which targets are preplanned. In general, all Army weapon systems capable of engaging EADS should participate in this category of SEAD on a *see-kill* basis. However, as with most aspects of AirLand Battle doctrine, Army involvement in complementary SEAD is for the purpose of supporting current and future objectives. The level of effort dedicated to complementary SEAD is controlled by the prioritization of Army fires within designated geographic areas where friendly air operations are anticipated. Complementary SEAD also includes those actions taken by the Army and Air Force aircrews for self-defense.

Responsibilities

Each service has different suppression capabilities and responsibilities in SEAD operations. SEAD responsibilities are determined by weapon system characteristics and SEAD mission requirements and objectives. The Army conducts SEAD primarily near the FLOT, while the Air Force is responsible for SEAD generally beyond the location of friendly forces.

The Army has primary responsibility for the suppression of ground-based EADS to the limits of observed fire. Observed fire is that fire for which the points of impact can be seen by an observer. An observer could be a person (such as a forward observer or an aerial observer) or target acquisition equipment (such as air or ground radars and sensors that can control fires on the basis of observation).

Targets that cannot be engaged with observed fire are the primary responsibility of the Air Force. The Army has secondary responsibility to suppress accurately located targets out to the range limit of its weapons. In these situations, the Army can suppress targets with unobserved indirect fire if the targets are located accurately enough.

Air Force Responsibilities

The air component commander is responsible for the following actions:

- Coordinating priorities (including target and geographic areas) for the SEAD effort with appropriate Air Force and Army commanders.
- Prioritizing EADS targets for attack.
- Planning and executing Air Force SEAD operations.
- Requesting SEAD support from other component commands when required.

Army Responsibilities

Army corps and divisions play an important part in SEAD operations. The corps FS cell and the ASOC coordinate SEAD requirements to support CAS missions. The corps FS cell coordinates SEAD requirements in support of other air operations through the land component commander's BCE. The BCE coordinates and integrates SEAD efforts, including Air Force SEAD, in support of Army aviation operations near and beyond the FLOT. The FS cell also advises the ASOC and BCE on Army SEAD effort in support of Air Force assets. The corps provides SEAD support by using its own resources or by tasking subordinate units for support, when applicable. Also, the FS cell establishes target and geographical area priorities and target attack guidance for subordinate units.

The division responsibilities are similar to those of the corps. The division requests, coordinates, and synchronizes SEAD support from the corps and Air Force when required. The division also develops intelligence on EADS composition and location and disseminates it to corps, subordinate units, and other units supporting the division.

Initiating the SEAD Process

The SEAD process starts with the Army or Air Force unit that requests air operations. First consideration is given to those suppression means organic to or available to the requesting unit. When SEAD requirements exceed the availability or capability of these means, the TACS or AAGS structure is used to request or coordinate joint support.

SEAD is an integral part of air or aviation mission planning. Requests from subordinate Army echelons are consolidated, reviewed, prioritized, and scheduled by use of available Army assets. Targets exceeding Army capabilities are nominated and forwarded to the Air Force for scheduling and inclusion in their SEAD operations. SEAD requests are processed through the appropriate Army FS cell channels. (Headquarters at EAC are organized with fire support elements.) The FS cell or FSE at each echelon is configured to plan, coordinate, and execute responsibilities inherent in SEAD operations. Requests for Air Force assets are then forwarded to the BCE or the ASOC. Once approved, the schedule and other pertinent information are sent back through the same channels to the requesting Army echelon.

CHANNELS FOR REQUESTING SEAD

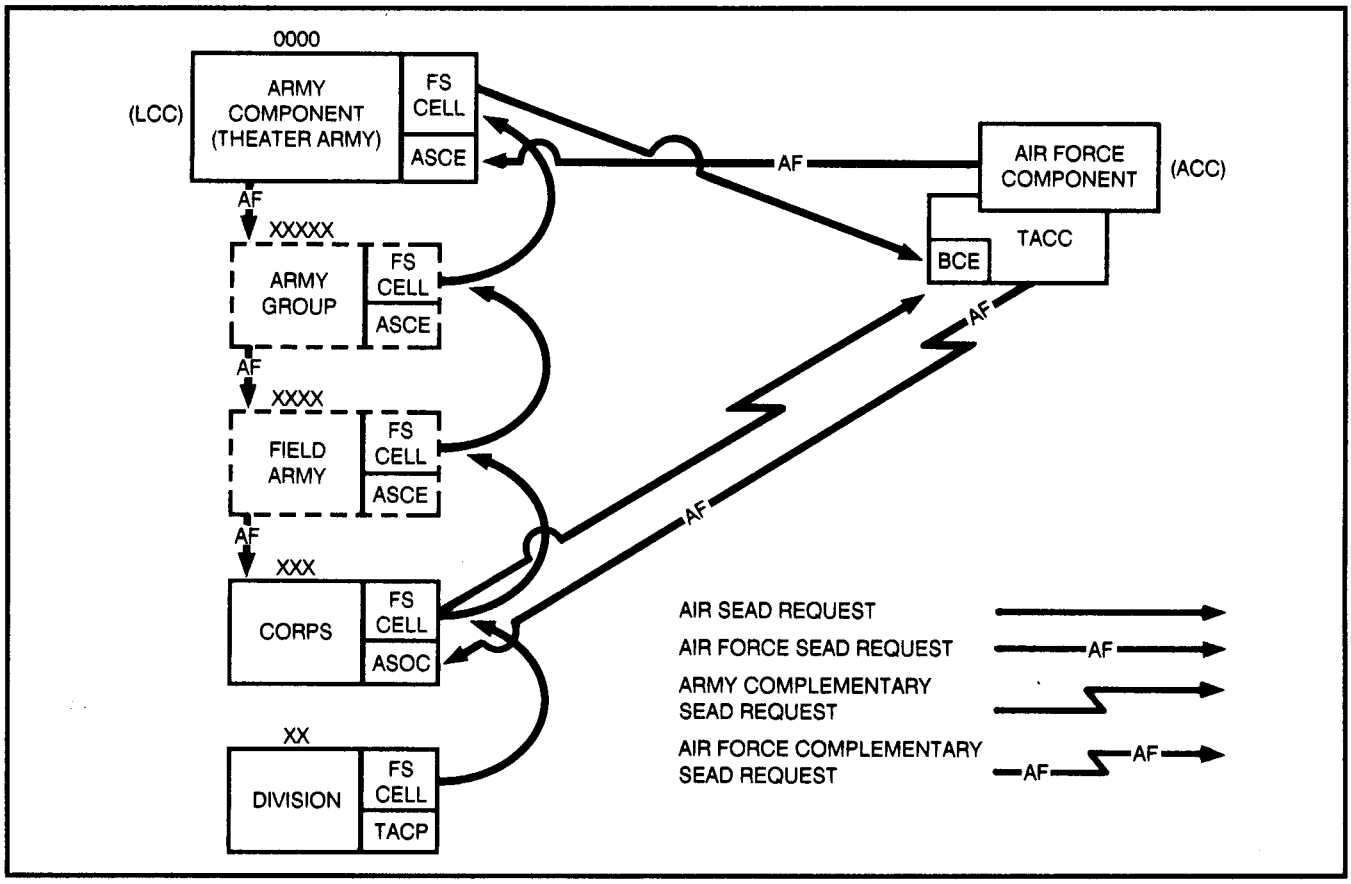

The Army also responds to Air Force-generated requests for Army SEAD to support air missions in accordance with established guidelines and priorities. As with Army-initiated SEAD requests, Air Force requests are processed through appropriate Army channels to the supporting units. The Army FSCOORD coordinates the mission and directs the SEAD effort. The FSCOORD also assesses the effectiveness of Army SEAD to ensure that results are forwarded to the requesting command.

If response time is critical, SEAD requests can be expeditiously processed. Time-sensitive SEAD requests can be processed directly from the FS cell to the BCE (Army requests) and from the TACC to the ASOC (Air Force requests).

SEAD Planning and Execution

The corps is the focal point for Army SEAD operations. It assesses the situation, determines requirements, assigns priorities, and allocates resources. Also, the corps ensures that the Army SEAD effort is integrated into, and synchronized with, the joint force commander's battle plan. In the corps CP, the FSCOORD directs SEAD operations through the functioning of the corps FS cell. This requires the coordination of all fire support means as well as intelligence-gathering and EW capabilities. The G2, in conjunction with the corps intelligence cell, gives the G3 and the FSCOORD information on the projected enemy defense threat. These data, plus airspace use information, are integrated into the SEAD plan by the FS cell (TRADOC Pamphlet 525-9).

At the corps level, campaign SEAD is supported by the coordinated use of air- and ground-based acquisition platforms, which include helicopter and fixed-wing assets. Disruptive efforts are planned to complement destructive efforts and include the full spectrum of EW capabilities. EW systems are used to degrade jammable threats and to neutralize enemy systems when destruction is not feasible.

The primary lethal attack means the Army has for supporting deep suppression is field artillery. Long-range rockets (MLRS) and surface-to-surface missiles (Lance) may be used to support campaign SEAD if targets are within their ranges.

NOTE: The conventional Lance warhead has a limited capability for SEAD. Near-term developments in MLRS range capabilities will improve the Army SEAD capability.

The corps plans and conducts localized suppression to protect aircraft that are required to penetrate the FLOT. This entails the suppression of EADS along the routes to (ingress) and from (egress) the attack objective as well as systems surrounding the objective when they are within range of Army attack means. A corridor may have to be established to protect helicopters participating in air assault operations.

Within the division CP, the FSCOORD determines the availability of acquisition and suppression systems. When Air Force assets are to be involved in supporting division operations, the TACP coordinates SEAD requirements and targets with the FSCOORD. Other staff responsibilities and coordination at division are similar to those at corps, with the FS cell directing and coordinating the SEAD effort. The division can participate in the three types of SEAD; however, its ability to contribute to campaign SEAD or to conduct deep suppression is limited. Army involvement in complementary SEAD is primarily at division level. When the division SEAD capabilities are exceeded, support is requested from corps.

SEAD Targeting

The targeting process for SEAD is the same as for any other target set. The targeting of enemy air defense weapons is conducted within the framework of the *decide-detect-deliver* approach to targeting and battle management. The product of the targeting process (that is, the successful conduct of SEAD) must ultimately accomplish one or all of the four basic tasks of fire support. The attack of enemy air defense weapons must –

- Support air or aviation assets engaged in contact with the enemy air defense threat.
- Fulfill some aspect of the commander's battle plan.
- Be synchronized with the air operation.
- Be capable of sustaining its effort.

The synchronization of SEAD is even more critical and difficult than the synchronization of fire support for ground maneuver because of the time sensitivity of air operations.

The responsibilities for SEAD targeting run across the corps and division staff sections as discussed below.

The G3 has the primary staff responsibility for ensuring that a particular SEAD operation is in consonance with the force commander's battle plan for using or supporting an air operation. The G3 confirms the commander's requirement for SEAD in terms of synchronization with the overall plan of battle, geographic areas such as corridors, and specific times for SEAD support.

SEAD operations are directed through the FS cell. The FSCOORD manages and directs the corps or division SEAD effort.

Section VI. NUCLEAR OPERATIONS

Description

Planning and executing the use of nuclear weapons parallel those actions for conventional fire support. However, a few procedures and techniques are unique, and several considerations become increasingly important. When determining the suitability for use of nuclear weapons, the commander must —

- Weigh the relative effectiveness of nuclear and nonnuclear weapons to achieve the desired results.
- Recognize collateral risks (friendly troops, civilians, and obstacle creation).
- Consider enemy responses
- Consider the effect of denial or delay of release.

Planning Considerations

Nuclear weapons are available only in limited quantities and must be used judiciously. Theater strategic employment is directed primarily at producing a political decision. Employment at corps level and below is explicitly intended to influence a decision at the operational level on the battlefield. However, tactical commanders and FSCOORDs at corps and division levels should plan to employ and integrate those limited weapons directed for use to achieve the greatest possible tactical advantage. This planning must–

- Be continuous and flexible.
- Integrate nuclear weapons support means and with maneuver.
- Synchronize intelligence collection and damage assessment with the nuclear release time frame and time span.

- Use maneuver to exploit the advantage gained from nuclear weapons.
- Be coordinated with adjacent units.
- Consider the effects of electromagnetic pulse (EMP) and blackout.
- Avoid keeping all tactical nuclear weapons in reserve.

Planning Allocation and Coordination

Nuclear weapons must be applied to a specific purpose in the battle plan. To do this, nuclear weapons are allocated (Do not confuse this term with "authorized for use") to support various tactical contingencies. This allocation process is continuous and occurs both before and after authorization for expenditure.

A tool that enables the corps commander and his staff to allocate nuclear weapons and integrate them into each tactical contingency is the nuclear weapons package. A package is a distinct grouping of nuclear weapons for employment in a specified area during a short time to support a corps tactical mission. A package is characterized and defined by four parameters:

- A specified number of nuclear weapons, listed by yield or by yield and delivery system.
- The purpose for which the package would be employed.
- A time for employment.
- An area for employment.

A package is given a name to identify and refer to a specific set of parameters. That package is then treated as a single entity for the purpose of request and release.

The corps develops package(s) to meet foreseeable contingencies. Normally, the package is then sent to higher echelons, adjacent units, and supporting units to facilitate coordination and to speed the release process.

Weapons within a package may be allocated to division(s), a separate brigade, or an ACR for planning. This allocation is referred to as a subpackage. It is a subelement of a package, and it lies in the sector or zone of a subordinate unit. A subpackage is planned by the subordinate unit. Then it is forwarded to corps for approval and inclusion in the corps nuclear package.

Phases of Planning

Because of the fleeting nature of the targets usually attacked at corps level and below, most packages do not contain fixed target lists.

Like conventional fire support, nuclear fire planning is continuous and dynamic. Nuclear employment planning generally follows normal staff planning procedures. Generally, packages are developed through a four-phase refinement process.

Peacetime Planning

Peacetime planning is preliminary planning based on the area, type of tactical situation expected, hypothetical threat, known limiting requirements, available resources, and proposed requirements.

Transition to War

Transition to war involves updates to packages that may apply to a particular upcoming combat situation. Using updates to limiting requirements, IPB, and the actual threat supplements peacetime planning already accomplished.

Battle Focus and Refinement

Battle focus and refinement are further development and refinement of the particular packages that specifically apply to the current fluid tactical situation. The situation also may

require the development of new packages to meet new contingencies. New and updated packages are developed in accordance with issued planning guidance and are forwarded to higher headquarters to speed the release process if required.

Refinements are made to a package after it has been approved and authorized for expenditure but before firing. These are made to accommodate changes in the tactical situation. They can be made without further authorization if they remain within the scope of the approved package. The refinement process is the most critical stage, because the fluidity of the tactical situation will most likely require changes during the time it takes to get authorization to fire the package.

Planning Steps

The steps discussed below for each phase provide the techniques for nuclear package planning and nuclear target analysis. The assumptions are that no nuclear planning has been done and there are no plans in existence. The initial focus is at corps level. The same procedures are used at division and are, in fact, an extension of the planning done at corps. Planning is actually a joint endeavor involving unity of effort and capitalizing on the sharing of information. Subsequently, the focus shifts to division level to discuss wartime planning actions within the scope of the scenario in Chapter 2.

Peacetime Planning

Given a contingency plan with an area of operations and a type threat, a large portion of the time-consuming work of nuclear planning and analysis can be completed during peacetime, long before the war commences. The objective is to build packages that are usable but flexible enough to apply to a given situation on a fluid battlefield. The idea is to do as much of this work as possible ahead of time.

References and Coordination

Gather references, and initiate coordination as discussed below.

Read Nuclear References. Locate and read the appropriate nuclear references.

Read the EAC OPLAN. Extract the corps mission, the assigned area of operations, and Threat information. Make particular note of specific nuclear planning guidance.

Input to the IPB Process. As the FAIO is participating in the G2's IPB process, ensure he is both including the enemy's nuclear posture and identifying lucrative locations and times for friendly nuclear attack for further analysis.

Coordinate for Obstacle Preclusion. Start coordination with the nuclear weapons employment officer in the G3 plans section. This is to identify critical features, such as a strategic bridge, that under most circumstances the commander would not want damaged.

Coordinate for Logistical Support. Contact the corps nuclear weapons logistic element officer to determine what weapons may be available and to initiate nuclear weapons logistical support planning.

Coordinate for Civilian Preclusion. Extract population and structure preclusion guidance from the EAC OPLAN. Initiate coordination with the corps G5 to get specific data.

Coordinate for Delivery System Information. Contact the FA S3 and the ASOC to determine what delivery systems and air-delivered bombs may be available.

Planning Information

Collect and compile planning information as discussed below.

Through the FAIO, get the G2's initial situation template and event template developed during

the IPB process. Place this information over a map.

Get the obstacle preclusion points from G3 plans. Place this information over a map.

Get the population and structure preclusion points from the G5. Place this information on a map.

Get information from the FA S3 and the ASOC about what delivery systems and air-delivered bombs may be available. Identify the weapon yields involved.

Desired Ground Zero

Identify tentative desired ground zeros (DGZs) for the largest-yield weapon that will fit within preclusion constraints on each mobility corridor (MC) where critical events and activities are expected to occur and where high-value targets (HVTs) will appear. The specific procedure is discussed below.

Start at the forward edge of the corps area of operations; and identify the locations where critical events, activities, and HVTs are expected to occur on a specific MC. These may be one point or a cluster of points within an area. If they are a cluster of points, identify the most probable center or a weighted average center.

NOTE: The EAC OPLAN may include the results of some operational-level nuclear planning that has already been done within the corps area of interest. These results should be looked at in more detail.

Select the largest realistic nuclear yield that may fit in the area.

Using the planning guidance constraints established by EAC or the G3, extract the preclusion and least separation distances for that yield from FM 101-31-2 or from an automated source. Apply the arcs to the preclusion points.

Place the weapon aimpoint on or as near as possible to the point or center of points. Ensure that the aimpoint does not fall within any preclusion arcs. If it does, move it slightly off-center of the point (within reason).

If the aimpoint still lies within a preclusion arc(s), select the next smaller yield weapon and repeat the two preceding steps.

Continue this process down each MC throughout the corps area of operations. The result will be a map overlay identifying the largest-yield weapons that could be used to attack HVTs in probable critical areas throughout the corps area of interest without violating preclusion constraints.

Overlay Modifications

After receipt of the corps commander's restated mission and initial planning guidance, modify the overlay produced above as necessary.

Selective Employment Plan

Develop a selective employment plan.

Courses of Action. The G2, G3, and FSCOORD, collectively, use the war-gaming process to develop courses of action. They bring to this analysis the knowledge and results gathered thus far from their own analyses of the corps mission and its essential and implied tasks. During the war-gaming process, the use of nuclear weapons is considered in each instance as are the other means of applying combat power (such as maneuver, EW, and TACAIR).

The G2 plans officer, G3, and targeting officer, as the corps nuclear weapons employment experts, actively participate in this war-gaming

process. As situations are identified where the use of nuclear weapons is being considered as an opportunity or a requirement, this group provides its expert analysis and technical advice on the use of nuclear weapons.

To actively participate in the war-gaming process used to develop courses of action, this staff group develops a methodology for conducting the analysis and a framework for keeping track of the various situations and proposed packages being developed. One way to do this is as follows:

- Split the corps area of operations into sectors. The avenues of approach lines and the time phase lines that run perpendicular to them and the MCs that were developed by the G2 can be used. Label each panel and each MC for internal reference. Use the same labels as the G2 used.
- Then draw a matrix and label each axis accordingly. Use the matrix to record the objective of use and the number and yield of nuclear weapons to be used in each box. Add some more panels to the matrix to consider multiple MCs and/or usage across the entire corps front.

Detailed Analysis. As the G2, G3, and FSCOORD identify a situation that may be an opportunity or a requirement for the use of nuclear weapons, the FSCOORD turns to the supporting nuclear staff group for a detailed analysis. Using the updated situation and event templates and a stated objective, they begin to analyze the situation. The G3 plans nuclear employment officer and the targeting officer tentatively identify aimpoints that will best counter the Threat actions as depicted on the situation and event templates. The G2 plans officer advises. To do this, two things must be assumed: the primary target category and the conventional damage contribution.

If a tank division is being attacked, the probable choice for primary target category would be Personnel in Tanks/Immediate Transient Incapacitation. Incapacitation is the defeat criteria if the enemy could close on the FLOT within 24 hours. Latent Lethality is used as defeat criteria if the enemy could close on the FLOT later than 24 hours. On the basis of these two criteria, target coverage is then determined by the corps commander and stated to the staff as a percentage of coverage (for example, 30 percent coverage).

Conventional damage contribution might be, for example, 50 percent. This means that 50 percent of the overall required damage will be contributed by conventional weapons and 50 percent by nuclear weapons.

Adjusted Aimpoints. After selecting tentative aimpoints for this one box, the target analyst overlays the preclusion information developed as described above. If any of the tentative aimpoints selected violate any preclusion constraints, an attempt is made to offset the aimpoints enough to avoid the violation yet achieve the desired target coverage. If this does not work, try one of the following procedures:

- Repeat the same steps, using smaller-yield weapons that potentially could be delivered in this box.
- If the preclusion constraints are self-imposed, modify them.
- Repeat the same steps, exchanging nuclear targets for conventional targets or changing the total damage contribution mix.
- If the preclusion constraints are imposed by EAC, make a note that they prevent the optimum execution of a package in this area. This may be addressed to EAC later.

Using the adjusted aimpoints, determine the feasibility of delivering the yields and quantities of weapons within the box. Modify the yields, types, and/or quantities as necessary to arrive at a package that is deliverable.

Thus far, the following results of evaluating this situation should be recorded on the appropriate box in the matrix:

- Type and strength of forces involved.
- Objective of use.
- Nuclear-conventional damage contribution mix.
- Primary target category and/or coverage.
- Number of weapons by type and yield
- Any unresolved preclusion problems.

This process is used to evaluate the entire corps area of interest. When the G2, G3, and FSCOORD have completed their preliminary analysis of MCs, they evaluate the courses of action that involve the use of multiple MCs. The use of nuclear weapons in situations involving multiple MCs and/or usage across the entire corps front should also be evaluated. Include this information in the matrix.

Weapons Package Options. From the situation and event templates and the matrix, identify the key large-scale situations that provide the best opportunity for, and/or that most likely will require the use of, nuclear weapons. Consider the worst-case scenario for the following:

- Each main enemy avenue of approach into the corps area of operations.
- Multiple approaches.
- Limited use across the corps front.

From the matrix, extract the weapons packages that apply to the situations identified in the preceding paragraph. Compare them with each other, and select the weapons package that is larger in either yield size or quantity of weapons or both.

Combine the objectives and damage contribution mixes for as many situations as possible.

Coordinate with the NWLE to determine the feasibility of logistically supporting each situation. Modify the situation as necessary.

The result of this process is the identification of one nuclear weapons package that is adequate to meet each specific situation yet is broad and flexible enough to be employed across the corps front. If two or more of the situation packages or objectives are so drastically different that one package will not suffice, two or more weapons packages options may be included within the emerging plan.

If EAC preclusion constraints in one of the situations identified above would prevent the use of nuclear weapons, the G2, G3, and FSCOORD must decide if the situation should be reported to the corps commander. If the corps commander agrees and thinks it is necessary, he may elect to identify the situation to the EAC commander and request that the constraint(s) be modified. He should point out the projected detrimental effect on friendly forces if the constraints are not modified.

Briefings. The G3, with the advice of the G2 and FSCOORD, selects the best course of action. The staff then briefs the corps commander. They report the results of their efforts, focusing specifically on the selected course of action. In their briefing, the G3 and FSCOORD include the results of the preliminary nuclear analysis that affects the selected course of action.

Subsequently, the nuclear staff group joins the G2, G3, and FSCOORD and briefs the corps commander on the results of the package development effort. This briefing summarizes the results of the analysis of other courses of action from a nuclear perspective. It includes the nuclear weapons requirements for each

course of action throughout the corps area of interest and, most importantly, the package(s) that will enable the corps to meet each of these requirements. Also at this time, the nuclear staff group informs the commander of any constraints established at EAC that, if not modified, would prevent the most effective employment of a nuclear weapon(s).

The corps commander tentatively approves the package and issues his nuclear employment concept to amplify his intent. He explains his decision and states any changes to be made or additional situations to be considered.

The supporting nuclear staff group modifies the package as required on the basis of the corps commander's intent and guidance just received.

Coordination. Coordinate with subordinate divisions.

The G3 plans nuclear employment officer, with input from the G2 plans officer and the target analyst, writes the nuclear planning guidance that goes in the nuclear support plan that is part of the corps OPLAN. This nuclear planning guidance should include the following:

- Corps commander's concept for employment of nuclear weapons.
- Nuclear-related planning assumptions.
- Obstacle and civilian population and/or structure preclusion information.
- Type and yield of weapons potentially available for use.
- Largest-yield weapon as compared to the preclusion overlay.
- IPB situation and event templates, nuclear sector overlay, and nuclear employment matrix (discussed above).

Division Actions. The division staff should follow the procedures listed above in conducting the nuclear analysis. Specifically, they should—

- Validate the portion of the corps nuclear analysis that falls within the division area of interest.
- Conduct a detailed nuclear analysis of the division area of operations. This includes developing their own more refined IPB situation and event templates and nuclear employment matrix.
- Compare the results of the analysis with the corps-developed package(s). Recommended changes necessary to meet certain situations or to increase flexibility are noted.
- Brief the division commander on the results of the nuclear analysis, and get his approval.
- Give the results of the nuclear analysis, along with recommended changes, to the corps nuclear support planning staff.

Corps Actions. The corps nuclear support staff consolidate the results of the division detailed analysis, eliminate duplications, and make any necessary changes to the corps package(s). Working with the NWLE, they develop delivery unit prescribed nuclear loads and detailed nuclear logistical deployment and support plans to support the package. They—

- Brief the corps commander, and get his approval. The briefing should include a review of the following:
  - Nuclear package employment assumptions.
  - Courses of action that require nuclear weapons.
  - Contents of package(s).
  - Deployment and logistical support plan.

- Forward the package to the EAC for approval. Continue to track the action through the approval process.
- Review and update the package as follows:
  - As new information becomes available.
  - When new requirements are developed by EAC.
  - At least annually.

Transition to War Planning

The current state of peacetime planning must be determined—what has been done so far.

The division receives the wartime mission from corps. Contained in that order are nuclear planning guidance and an initial weapons planning allocation. Actions at division are as follows.

- Extract pertinent information.
- Gather and quickly review nuclear references.
- If not stated, ascertain which package and subpackage provide the best framework for conducting initial planning.
- Update IPB and limiting requirements. Adjust aimpoints as necessary.
- Ascertain threat to nuclear weapons fixed storage sites. Report assessment to corps, Review nuclear weapons deployment plans.
- Conduct nuclear vulnerability analysis for division units based on updated Threat information available. Repeat as new Threat information becomes available. Give results to division commander, via G3, for decision and subsequent transmittal to subordinate brigades.
- Participate in war-gaming process. Modify existing subpackages as necessary.
- Analyze new courses of action for use of nuclear weapons as they are developed.
- Complete the initial nuclear planning within the nuclear planning guidance issued by corps.
- Forward the results of initial nuclear planning and any nuclear planning done as a result of the war gaming discussed above that may be relevant to corps. (For example, planning might be outside the realm of current corps guidance, in line with a different subpackage, or completely new.)
- Ensure current nuclear weapons configuration in PNL or prescribed nuclear stocks (PNSs) and corps nuclear ammunition supply points (NASPs) adequately supports the potential uses identified above.
- Monitor nuclear weapons deployment.
- Report lost, damaged, or destroyed weapons to corps NWLE via the corps FS cell; and request replacement.

Battle Focus and Refinement

This is now the middle of war. Tactical nuclear use has not occurred. Looking out 72 to 96 hours, corps has determined that use of nuclear weapons will be required. Corps submits a request to EAC. In a new nuclear planning guidance message, corps instructs division to conduct detailed planning; planning is continuous.

Division extracts the corps nuclear planning guidance from orders and the latest messages. Included are specific guidance in line with an existing nuclear package and a specific weapons allocation in line with a recent request message.

More war gaming is done between the division G2, G3, and FSCOORD.

High-value targets are identified, Specific TAIs and NAIs are identified. Potential high-priority targets (HPTs) for nuclear weapons are identified.

Decision points are locked in.

Nuclear targeting tasks are included in targeting and intelligence-collection tasks to the collection manager for tasking of sensors.

Organic sensors are tasked. Requests for other sensors are forwarded to corps and on to EAC if necessary. This includes collection for decision making at decision points, targeting within TAIs, and posts trike analysis requirements.

A new contingency has just arisen for which the G2, G3, and FSCOORD have developed a new course of action that may involve nuclear weapons. This requires the creation of a new subpackage that does not fit the scope of the current request or any existing package well. The subpackage is created and forwarded to corps for consideration.

Package Refinement

The corps package is refined. The following actions are now taken within the subpackage:

- Confirm decision points.
- Determine delivery units.
- Confirm FLOT locations.
- Confirm preclusion data.
- Process sensor information.
- Identify HVT locations.
- Receive release.
- Adjust aimpoints.
- Report FLOT and aimpoint locations to corps for deconfliction.
- Coordinate aimpoint locations with conventional fire support and maneuver actions.
- Receive authority to expend nuclear weapons.
- Prepare nuclear warning (STRIKWARN) messages IAW STANAG 2104/QSTAG 189.
- Analyze probable Threat response. Reanalyze friendly nuclear vulnerability, and recommend changes to unit posture if necessary.
- Execute strike.
- Report nuclear detonation in accordance with STANAG 2103/QSTAG 187.
- Submit expenditure reports through channels IAW SOP.
- Make poststrike reconnaissance and analysis.
- Evaluate results of poststrike analysis. Determine if restrike is necessary and, if so, if it is permitted.

Follow-On Strike

The situation has shifted, and EAC has directed corps to prepare for first follow-on use immediately. Division has recommended to corps that certain of the nuclear targets in the first strike be restruck in this next use. Also, this next use will be in an adjacent division in an adjacent corps. The situation will require the transfer of weapons to this adjacent allied corps, corps-to-corps nuclear support, and restrike of the division targets.

Nuclear Logistical Support Principles

To deliver the nuclear package(s) on the enemy, nuclear ammunition must be positioned

properly on the battlefield. Therefore, some nuclear ammunition usually is carried by delivery units, and some is carried by other combat support units.

Nuclear ammunition that is designated for and carried by a delivery unit is called the prescribed nuclear load.

Nuclear ammunition that is designated for a delivery unit but carried by a combat support unit is called prescribed nuclear stocks.

A unit PNL or PNS may be changed at any time by the corps or division commander. When determining or changing a unit PNL or PNS, the following should be considered:

- Unit mission.
- Requirements for numbers of weapons in current and future packages.
- Availability, survivability, and security of both nuclear weapons and their associated delivery systems and/or units.
- The carrying capacity of the unit.

When planning overall nuclear logistical support, the following should be considered:

- Capability to concentrate nuclear fire in any sector of the corps area quickly.
- Minimum handling and movement of nuclear weapons.
- Simplicity and uniformity in procedures.
- Survivability of weapons.
- Security of classified or critical material, installations, and communications.

Nuclear Weapons Resupply

One area requiring specific or additional planning effort when nuclear weapons may be used is nuclear weapons resupply.

The nuclear weapons logistical support structure may vary according to the unique requirements of a specific theater, but it must provide timely and reliable support in the six areas outlined below. The methods of implementation, however, will require flexibility and innovation in response to short reaction times and changing combat conditions. Support must do the following:

- Ensure operational readiness. Maintain the capability to provide nuclear weapons support to appropriate units as required to support planning and execution.
- Move smoothly from peacetime storage to deployment locations to support nuclear delivery units as required.
- Provide continuous nuclear weapons support. This support includes, but is not limited to, resupply and maintenance (and in some cases transportation support) to move weapons forward or laterally for redistribution.
- Ensure timely delivery of complete rounds. Coordinate with firing units to deliver nuclear rounds (warhead section, fuze, powder, or missile body) as required.
- Support US allies as required. Maintain US custody of nuclear weapons until proper release is directed. In addition, provide weapon support such as supply and maintenance.
- Be survivable. Nuclear weapons storage areas will be prime intelligence targets. Good operational security techniques/must be practiced. Dispersal, in fact, may be the key to survivability. Also, a deception plan must be written and executed at each level of command.

Nuclear-capable units joining a mature theater must get the supporting special weapons brigade SOP and the communications security (COMSEC) materiel required to authenticate

nuclear control orders. In an immature theater, nuclear ammunition is moved into the theater by USAF or US Navy assets. Once in the theater, ammunition can still be moved into the corps by either USAF or Navy assets. At this point, US Army ordnance units secure and move the ammunition before it is issued to using units.

Nuclear weapons resupply is coordinated in the corps by the nuclear weapons logistics element (see FM 9-6 and FM 9-84). The special ammunition ordnance brigade is a major subordinate command of the theater army. It is responsible for providing the corps commander service and sustaining support for Army nuclear weapons and high-cost, low-density missiles. This support includes supply, accountability, surveillance, and maintenance of the items from entry into the theater until expenditure or retirement. The brigade also provides security until the nuclear ammunition is issued to the firing unit. The brigade commander normally serves as the theater army logistic system manager for nuclear ammunition. Special ammunition ordnance battalions are assigned to the ammunition ordnance brigade. The battalion provides a corps with nuclear ammunition supply and maintenance services. Normally, the battalion forms mobile NASPs and a weapons holding area (WHA). The NASPs, located in the corps area, usually contain the nuclear weapons designated for the supported corps. The WHA, located in the communications zone (COMMZ), contains the theater reserves. An NWLE is at the corps tactical CP to coordinate nuclear logistic support for the corps. The corps NWLE coordinates the distribution and reallocation of weapons between the NASPs and the delivery units as directed by the corps FSCOORD.

The NWLE officer is the key to effective nuclear logistical support within the corps. He can best perform his duties if he is located in the FS cell. He provides expertise on movement and resupply capabilities and requirements to the FSCOORD. The DFSCOORD's, target analyst's, and NWLE officer's combined knowledge of nuclear weapons release procedures, deployment plans, movement and resupply capabilities and requirements, weapons effects, analysis techniques, and existing packages form the technical base of expertise within the corps FS cell for the employment of nuclear weapons. The NWLE officer is specifically responsible for –

- Maintaining the current status on all nuclear weapons within the corps. Reporting changes in status to the NWLE at EAC.
- Recommending positioning of the NASPs supporting the corps to ensure weapon survivability, permit flexible response, and best support corps delivery units.
- Anticipating logistical requirements.
- Advising the FSCOORD and corps commander on nuclear logistical matters.
- Coordinating ground or air transportation for the movement of nuclear weapons within the corps or between the NASPs and delivery units.
- Coordinating for the delivery of new warheads and evacuation of unserviceable warheads through an airhead or seaport located in the corps area.
- Coordinating the movement of warheads between ordnance battalions or delivery units outside the corps. This may involve the transfer of warheads to allied units.
- Coordinating permissive action link (PAL) teams.
- Submitting nuclear accident incident response and assistance (NAIRA) reports to EAC.

References

References pertaining to nuclear operations are as follows:

- FM 3-100.
- FM 5-103.
- FM 5-106.
- FM 9-6.
- FM 9-84.
- FM 100-30.
- FM 100-50.
- FM 101-31-1.
- STANAG 2103/QSTAG 187 (ATP 45).
- STANAG 2104/QSTAG 189.

APPENDIX C

IMPROVED ARTILLERY MUNITIONS

This appendix describes the following special-purpose field artillery ammunition:

- *Family of scatterable mines.*
- *Laser-guided field artillery projectile (Copperhead).*
- *Obscurant smoke.*

Family of Scatterable Mines

Types of FA-Delivered FASCAM

FA-delivered FASCAM allows the maneuver commander to quickly emplace a minefield. There are two types of FA-delivered FASCAM: area denial artillery munitions (ADAM) (antipersonnel mines) and the remote antiarmor mine system (RAAMS) (for use against lightly armored vehicles). Both are available only in 155 mm. FASCAM has two preset self-destruct times: short duration (unclassified self-destruct time of less than 24 hours) and long duration (unclassified self-destruct time of greater than 24 hours). The corps commander has the authority to employ FASCAM. Employment may be delegated for specific operations or for limited periods of time as follows:

- Long-duration mines down to maneuver brigade.
- Short-duration mines down to maneuver battalion.

Engineer Officer's Responsibility

The engineer officer is responsible for providing expertise on the employment of all types of FASCAM; however, the FSO provides the technical expertise to the engineer concerning the employment of FA-delivered FASCAM. The advisor to the engineer officer concerning FASCAM delivered by the Air Force is the ALO.

Defensive Capabilities

Capabilities in the defense include the following:

- Close gaps and lanes in other obstacles.
- Reseed breeched minefields.
- Delay or disrupt attacking forces.
- Deny enemy unrestricted use of areas.
- Disrupt movement and commitment of second-echelon forces.
- Develop targets for long-range antitank weapons.
- Disrupt and harass enemy command and control, logistics, or staging areas.
- Reinforce existing obstacles.
- Disrupt or delay river crossings.

Offensive Capabilities

Capabilities in the offense include the following:

- Supplement flank reconnaissance and security forces in protecting flanks along avenues of approach.
- Suppress and disrupt enemy security elements once contact has been made.
- Hinder withdrawal of enemy forces.
- Hinder the ability of the enemy to reinforce the objective area.

Employment Options

FASCAM may be delivered by itself– either all RAAMS, all ADAM, or a combination of both. If RAMMS and ADAM are employed on the same target, ADAM is fired as the last volley.

FASCAM may be delivered in conjunction with other munitions. If so, it extends the effects of those munitions; for example, firing ADAM into a logistic site after firing DPICM. If fired in conjunction with other munitions, FASCAM is delivered in the last volleys.

Employment Considerations

Delivery error and availability of tubes may limit FASCAM use. Normally, FASCAM requires large amounts of ammunition delivered with high-angle fire. This adversely affects FA survivability. Also, the FA units normally must provide other types of fires while delivering FASCAM.

FA-delivered FASCAM has reduced effectiveness on hard surfaces such as concrete and asphalt.

Logistic requirements for FA are increased. Normally, FA units carry only short-duration mines. If long-duration mines are to be used, the FA unit must be notified well in advance to allow transport from the ASP to the firing unit.

FSO's Responsibilities

Normally, the FSO obtains the safety zone (minefield size) of the minefield either by calculating it himself or by having it calculated by the DS battalion S3. The engineer is responsible for disseminating the safety zone.

Delivery

Normally, FASCAM is delivered at high-angle fire. The exact number of rounds depends on the size of the minefield, the minefield density, and whether the rounds are delivered by high-angle or low-angle fire (RAAMS only). For specific employment (for example, aimpoints and number of rounds), see FM 6-20-40 or FM 6-20-50.

Laser-Guided Field Artillery Projectile (Copperhead)

Description

Copperhead is a 155-mm cannon-launched guided projectile (CLGP) with a shaped-charge warhead and a laser seeker. When fired at a moving or stationary hard point target, Copperhead homes in on laser energy reflected from the target during the final portion of its trajectory. Laser energy is provided by a remote laser designator. Optimum use of Copperhead is against multiple targets in large target arrays outside the range of maneuver direct-fire weapon systems (approximately 3,000 meters). Single targets or very few, widely separated targets may be engaged by Copperhead if they are high-value targets; for example, an enemy commander's vehicle. Targets appearing within the range of maneuver direct-fire weapon systems should be engaged by Copperhead only when the maneuver commander directs or when the direct-fire systems are unable to engage them.

Strengths

Copperhead has high hit probability on point targets, moving or stationary, at longer ranges than possible with current direct-fire weapons.

Copperhead is extremely lethal.

A rapid rate of fire is possible against an array of targets within the same footprint because of volley fire.

A laser designator does not have the pronounced firing signature of an antitank guided missile.

Weaknesses

Responsiveness of the system depends on several variables created by distinct acquisition and delivery components of the system and by the weather.

Weather can limit performance. Cloud-free line of sight from the projectile path to the target is required for target acquisition and engagement. The ground/vehicular laser locator designator (G/VLLD) operator must be able to visually acquire (see) the target.

The G/VLLD and operator are vulnerable to suppressive fires.

The Copperhead system depends on two-way communications between the operator and the firing battery FDC.

Effectiveness of target engagement is limited by the operator's ability to track the target during the last 13 seconds of flight of the round.

The emitted signal from the designator can be detected.

The success of the Copperhead depends greatly on reflected energy. Therefore, the company FSO should ensure the G/VLLD is positioned to optimize the system capabilities and to complement the direct-fire weapons. Laser designation requires an uninterrupted line of sight between the designator and the target. Anything that obstructs or weakens the laser signal will cause a significant decrease in the performance of the round. Remember that terrain, vegetation, fog, smoke, precipitation, and dust obstruct visibility; and the maximum range is 5,000 meters to a stationary target for effective use of the Copperhead round.

Employment

Copperhead targets can be engaged as either planned targets or targets of opportunity. Planned targets are the preferred method of engagement, because the firing battery requires less reaction time. Normally, the target-of-opportunity technique is used only during mobile operations and before planned targets are developed.

The Copperhead and the designator must have identical laser switch settings (laser pulse codes). Switch settings are assigned to observers on a semipermanent basis. They are changed only for cause; for example, changes in the organization for combat that cause duplication of settings in adjacent units. Switch settings are sent as part of the message to observer to ensure that the appropriate switch setting has been applied. Laser pulse codes are controlled and allocated by the corps FS cell. A clear SOP should be established for allocation and control.

NOTE: For an in-depth dicussion of the Copperhead and its employment, refer to FM 6-30.

Obscurant Smoke

Offensive Operations

Obscurants have many applications on the battlefield. During offensive operations, obscurants are used to conceal units and

individual weapon systems. This enables the commander to maneuver behind a screen and to deceive the enemy about his strength and position. Obscurants are also used to blind acquisition means.

Defensive Operations

During defensive operations, obscurants are used to separate and isolate attacking echelons, create gaps, disrupt enemy weapon systems, force mechanized infantry to dismount, and make enemy targets easier to hit. It also may conceal defensive positions.

Applications

Four general applications of obscurants on the battlefield are as follows:

- Obscuration — smoke placed on or near the enemy position to interfere with enemy observation of the battlefield.
- Screening — smoke placed within areas of friendly operations or in areas between friendly and enemy forces to degrade enemy observation and fire. It is primarily intended to conceal friendly forces.
- Marking and signaling — smoke used to communicate actions on the battlefield or to mark locations.
- Deception — smoke used in conjunction with other actions to confuse or mislead the enemy. Generally, this is used in conjunction with other deceptive measures.

Employment Considerations

To be effective, smoke must be used in sufficient quantities. Factors affecting the quantity are atmospheric conditions, type of smoke required, size of the area to be smoked, and length of time needed. On the basis of those factors, excessive amounts of ammunition may be required to meet the commander's guidance. Also, FA survivability is adversely affected when firing long-duration smoke screens.

Smoke adversely affects battlefield systems that must operate in concert, such as TACAIR, armor, infantry, field artillery, and Army aviation.

Smoke hinders visual communications, causing the unit to rely to a greater degree on radios.

Sources

Mortars can deliver a high volume of smoke at midranges and are the most rapid and effective indirect delivery means. Both 81-mm and 107-mm weapons deliver WP.

Field artillery cannons can deliver smoke out to distant targets. They can deliver hydrogen chloride (HC) and WP. However, as smoke is available in limited quantities, excessive use should be planned in advance.

Smoke pots can produce large volumes of smoke for extended periods of time. They are the commander's primary means of producing small smoke screens.

Additional smoke sources which should be considered when planning smoke operations include —

- Mechanical smoke generators.
- Air-delivered smoke.
- Vehicular smoke grenade launchers.
- Vehicle engine exhaust smoke systems.
- Battlefield dust and obscurants.

APPENDIX D

PLANS, ORDERS, AND ANNEXES TO PLANS AND ORDERS

This appendix implements STANAG 2014/QSTAG 506, Edition 5, Amendment 4.

The commander's selected course of action, his concept of the operation, his intent, and all guidance given during the planning process form the basis for the development of the operation order. The OPORD merges maneuver and fires. Paragraph 3 of the OPORD outlines how the supported commander wants to use his fire support and maneuver assets.

STANAG 2014 prescribes standard formats for the OPORD and its supporting documents. This publication implements STANAG 2014 as it pertains to fire support operations and functions.

Operation Order

OPORD paragraph 3a, explanation, Concept of Operation, is a statement of the commander's intent which expands **why** the force has been tasked to do the mission stated in paragraph 2. It also tells **what** results are expected, **how** these results facilitate future operations, and **how,** in broad terms, the commander visualizes achieving those results (force as a whole). The concept is stated in enough detail to ensure appropriate action by subordinates in the absence of additional communications or further instructions. The **who** that will accomplish the concept of operation is in subparagraphs to paragraph 3a. Style is not emphasized, but the concept statement should not exceed five or six sentences written or personally approved by the commander. If an operations overlay is used, it is referenced here; however, the concept statement must be present as paragraph 3a and on the overlay.

Responsibilities

The FSCOORD prepares the fires portion of the concept of operation subparagraph of the

OPORD FORMAT

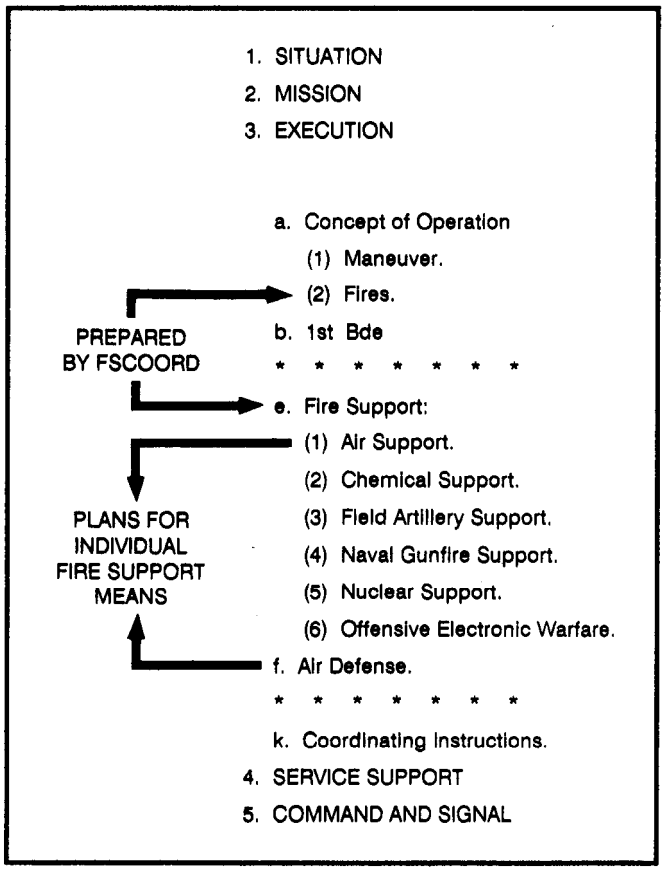

OPORD. He also coordinates the preparation of the fire support subparagraph (or annex), which constitutes the fire support plan. The fire support plan includes a subparagraph for each fire support agency (means) involved in the operation. Input for these subparagraphs is

FORMAL FIRE SUPPORT PLANNING RESPONSIBILITIES

LEVEL	AGENCY	INDIVIDUAL RESPONSIBLE	FIRE SUPPORT PLAN	FIRE SUPPORT ANNEX	FIELD ARTILLERY SUPPORT PLAN	AIR SUPPORT PLAN	NAVAL GUNFIRE SUPPORT PLAN	NUCLEAR SUPPORT PLAN	CHEMICAL SUPPORT PLAN	OFFENSIVE ELECTRONIC WARFARE PLAN
Corps	Main FS cell	FSCOORD	■	■			■	■		
	NBC element	Chemical officer							■	
	Corps artillery CP	FA operations officer	■	■	■					
	EW support element	EW staff officer								■
	Air support operations center	G3 air[1]				■				
Division	Main FS cell	FSCOORD[2]	■	■			■	■		
		Assistant G3 air[1]				■				
		Naval gunfire officer					■			
	Div arty CP	Div arty S3			■					
	NBC element	Chemical officer							■	
	EW support element	EW staff officer								■
Brigade	FS cell	FSCOORD[3]	■	■				■		
		S3 air[1]				■				
		Naval gunfire liaison officer					■			
		Chemical officer							■	
	Direct support FA battalion S3				■					

[1]Assisted by air liaison officer.
[2]Normally done by an assistant FSCOORD.
[3]Normally done by the fire support officer.

prepared by the appropriate fire support representatives within the fire support cell. If the fire support subparagraph needs amplification, the FSCOORD prepares a fire support annex. See the table below for planning responsibilities.

Fire Support Plan

The fire support plan for a force headquarters need not totally depend on target input from subordinate elements. The fire support plan tells subordinate commanders what they are to do and what they need to know to accomplish their missions. The plan should not address items in SOPs and should not include how-to-implement instructions to individual fire support agencies. That type of information should be addressed in SOPs or in implementing instructions issued after the receipt of the fire support plan.

Once the fire support plan is prepared, it is disseminated as a part of the force operation order.

FIRE SUPPORT PLAN DISSEMINATION

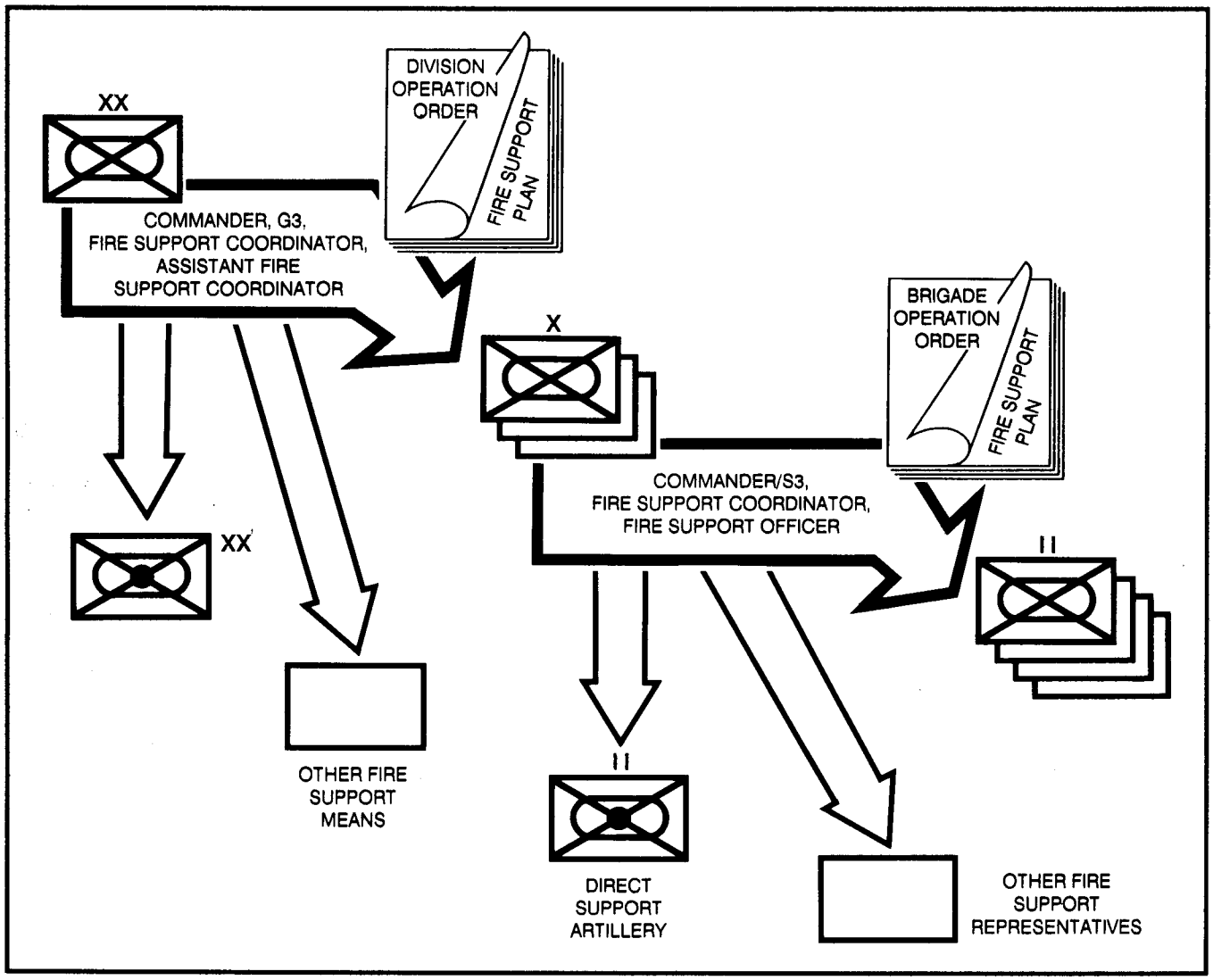

The following example shows a division OPORD in which the fire support plan in paragraph 3 is complete. It does not require amplification in a fire support annex.

SUGGESTED DISTRIBUTION OF FIRE SUPPORT PLANS

PLAN	SUPPORTED MANEUVER UNITS	SUPPORTING FA UNITS	SUPPORTING USAF UNITS	ANGLICO AND SUPPORTING SHIPS	SUPPORTING ARMY AVIATION UNITS	SUPPORTING AD UNITS	SUPPORTING ORDNANCE UNITS
Fire support plan	R	R	R	R	R	R	D
Fire support annex	R	R	R	R	R	R	D
Field artillery support plan	D	R	D	D			D
Air support plan	D		R		D	D	
Naval gunfire support plan	D			R			
Chemical support plan	R	R	D		D		R
Nuclear support plan	R	R	R		D	D	R
Attack helicopter support plan	D		D		R	D	D
Air defense support plan	D		D		D	R	R

LEGEND:
R = required D = discretionary

LEGEND FOR ALL PLANS

AA = avenue of approach
ANX = annex
ave = avenue
btry = battery
CASP = chemical ammunition supply point
CEWI = combat electronic warfare intelligence
CFA = covering force area
COP = combat operations post
CSR = controlled supply rate
det = detachment
def = defensive
ENG = engineer
EWP = emergency warned personnel
FFA = free-fire area
FS = fire support
how = howitzer
ITI = immediate transient incapacitation
KT = kiloton
LL = latent lethality
LOI = letter of instruction
MAN = maneuver
N/CH = nuclear and chemical
NUE = negligible risk to unwarned exposed personnel
plt = platoon
pos = position
REC = radio electronic combat (Soviet)
regt = regiment
RSTA = reconnaissance, survey, and target acquisition
SIGINT = signal intelligence
TBD = tree blowdown
TTFC = tactical and technical fire control

EXAMPLE DIVISION OPORD (WITHOUT FIRE SUPPORT ANNEX)

(Classification)

Copy No ___ of ___ copies
52d Mech Div
ZEBRO (CH600065), MONROVIA
280001Z August ___
AB101

OPERATION ORDER _____

Reference: Map, series JWS 123, MONROVIA, sheet 1 (LODE-VEIN), edition 69, 1:50,000.

Time Zone Used Throughout the Order: ZULU.

Task Organization:

1st Bde
- 1-77 Armor
- 1-78 Armor
- 1-14 Cav
- 1-40 FA (155, SP)(DS)

2d Bde
- 1-3 Mech
- 1-4 Armor
- 1-23 Cav
- 2-14 Cav
- 1-41 FA (155, SP)(DS)

3d Bde
- 1-2 Mech
- 1-79 Armor
- 1-80 Armor
- 1-42 FA (155, SP) (DS)

Div Arty
- 1-43 FA (203, SP/MLRS)
- 2-606 FA (203, SP)
- 2-607 FA (203, SP)
- 2-631 FA (155, SP)
- 2-661 FA (203, SP)
- HHB, 61st FA Bde
- Btry E (TA), 26th FA

Div Troop
- 1-81 Armor
- 1-82 Armor
- 1-441 ADA (Chaparral-Vulcan)

DISCOM (Omitted)

1. SITUATION

a. Enemy Forces. (Omitted)

b. Friendly Forces.

(1) 3d Corps defends in zone with three divisions on line: 40th Armd Div in north, 52d Mech Div in center, and 53d Mech Div in south.

(Classification)

EXAMPLE DIVISION OPORD (WITHOUT FIRE SUPPORT ANNEX) (CONTINUED)

(Classification)

OPORD _____, 52d Mech Div

(2) Divisions establish own covering forces.

(3) 7th TAF supports 3d Corps with 200 air support sorties daily during period 30 Aug to 6 Sep. Priority to 52d Mech Div.

(4) 101st FA Bde (Lance/MLRS), GS 3d Corps.

(5) Naval gunfire support. Fire Support Unit (TU 36.10) supports 52d Mech Div.

c. Attachments and Detachments.

(1) See 28 Aug organization.

(2) 61st FA Bde attached effective 290100 Aug.

2-606 FA (203, SP)
2-607 FA (203, SP)
2-631 FA (155, SP)
2-661 FA (203, SP)

(3) 1-14 Cav and 2-14 Cav attached effective 291200 Aug.

2. MISSION

Division establishes covering force along international border and defends in sector from DX100320 to EX490050 NLT 311200 Aug.

3. EXECUTION

a. Concept of Operation. Annex B (Operation Overlay).

(1) Maneuver. Division deploys covering force with brigades controlling abreast: 1st Bde in north, 2d Bde in center, and 3d Bde in south. Division defends MBA in sector, stopping enemy forward of brigade rear boundaries. Division reserve (TF 1-81, TF 1-82) be prepared for commitment in area of 2d Bde and 3d Bde in priority.

(Classification)

EXAMPLE DIVISION OPORD (WITHOUT FIRE SUPPORT ANNEX) (CONTINUED)

(Classification)

OPORD _____, 52d Mech Div

(2) Fires. Priority for fire support initially to 2d Bde. Brigades plan a 10-minute conventional counterpreparation for the MBA (para 3e, Fire Support).

b. 1st Bde. (Omitted)

c. 2d Bde.

(1) Establish covering force in sectors.

(2) Defend in sectors.

(3) Deny free access to COLUMBO.

d. 3d Bde. (Omitted)

e. Fire Support.

(1) Air Support.

(a) General. Corps has 200 air sorties daily for planning purposes during the period 30 Aug to 6 Sep.

(b) Allocation. Daily CAS sorties for planning:

1st Bde	8
2d Bde	16
Div	16

(c) Miscellaneous.

1. Unexpended ordnance will be jettisoned into division FFA. (See Annex B, Operation Overlay.)

2. Plan 4 CAS sorties per target.

(2) Chemical Support.

(a) General. Toxic chemicals may be planned for use within the CFA and MBA. Release for use will be transmitted per SOP (Annex D, Chemical Support Plan).

(Classification)

EXAMPLE DIVISION OPORD (WITHOUT FIRE SUPPORT ANNEX) (CONTINUED)

(Classification)

OPORD _____, 52d Mech Div

(b) PCL. As directed by 3d Corps LOI dated 20 Apr.

(3) Field Artillery Support.

(a) General.

1. Priority of fire initially to 2d Bde.

2. Targeting priorities: Nuclear-capable weapons and support facilities, maneuver and fire support tactical control facilities, and heavy multiple rocket launchers.

(b) Organization for combat.

1-40 FA (155, SP): DS 1st Bde
1-41 FA (155, SP): DS 2d Bde
1-42 FA (155, SP): DS 3d Bde
1-43 FA (203, SP/MLRS): GS
2-606 FA (203, SP): GSR 1-40 FA
2-607 FA (203, SP): GSR 1-42 FA
2-631 FA (155, SP): GSR 1-41 FA
2-661 FA (203, SP): GS
HQ, 61st FA Bde: Alternate div arty CP
Btry E (TA), 26th FA: GS

(c) Miscellaneous.

1. 2-606 FA. Do not exceed 50% of CSR in supporting 1-40 FA.

2. Priority of positions to 1-41 FA and 2-631 FA, in order.

3. 1-41 FA plan fires of 2-631 FA for counterpreparation only.

4. During covering force operations, reinforced units have priority of fires of GSR FA battalions.

(Classification)

EXAMPLE DIVISION OPORD (WITHOUT FIRE SUPPORT ANNEX) (CONTINUED)

(Classification)

OPORD _____, 52d Mech Div

5. Nondivisional FA units are TACFIRE-equipped.

(4) Naval Gunfire Support.

(a) General.

1. TU 36.10 supports 52d Mech Div with 2 ships.

2. Priority of NGF initially to 2d Bde.

(b) Allocation.

CA-78 (cruiser): GS
DD-56 (destroyer): DS 2d Bde

(c) Miscellaneous.

1. NGO and NGLOs report to division main FS cell NLT 280915 Aug.

2. Report ammo status twice daily at 0800 and 2000 hours.

(5) Nuclear Support.

(a) General. Division plans subpackages for corps contingencies A, B, and C. Annex C (Nuclear Support Plan) provides guidance.

(b) PNL.

UNIT	155-mm		203-mm	
	0.2 KT	1.0 KT	2.0 KT	8.0 KT
1-40 FA	3	2		
1-41 FA	4	4		
1-42 FA	2	2		
1-43 FA			5	5
2-661 FA			5	5
2-631 FA	2	3		

(Classification)

EXAMPLE DIVISION OPORD (WITHOUT FIRE SUPPORT ANNEX) (CONTINUED)

(Classification)

OPORD _____, 52d Mech Div

(c) Miscellaneous.

(6) Offensive Electronic Warfare.

(a) EW organization for combat.

1/A/323 CEWI Bn: DS 1st Bde
2/A/323 CEWI Bn: DS 2d Bde
3/A/323 CEWI Bn: DS 3d Bd
Quickfix Plt, OPCON CEWI Bn: GS
SIGINT Processing Plt/A/323 CEWI Bn: GS

(b) ESM priorities. Priority for ESM efforts will be to locate for targeting REC activities, enemy artillery and rocket force elements, enemy air defense, and maneuver C^3, in that order.

(c) ECM priorities. Priority for ECM assets will be to degrade enemy artillery and rocket forces C^3, to degrade enemy air defense C^3, and to degrade critical enemy maneuver C^3 systems, in that order. In the absence of ECM tasking, revert to ECM priorities.

(d) Miscellaneous. High-payoff target data can be sent directly from EW platoon/team to div arty S3.

(7) Coordinating Instructions.

(a) High-payoff target matrix.

PRIORITY	CATEGORY	SHEET NUMBER	DESCRIPTION
1	5 ENG	70, 71	Movement support det
2	1 C^3	25, 26, 30, 31	MRR/MRD forward and main CP
3	7 REC	16, 105	Radar intercept, UHF/VHF jamming site
4	2 FS	1-8, 18-21	FDCs, COPs, 122 mm, 152 mm, 82 mm
5	8 N/CH	19, 81, 82	MRLs, 203-mm howitzers, 240-mm mortars

(Classification)

EXAMPLE DIVISION OPORD (WITHOUT FIRE SUPPORT ANNEX) (CONTINUED)

(Classification)

OPORD _____, 52d Mech Div

PRIORITY	CATEGORY	SHEET NUMBER	DESCRIPTION
6	3 MAN	43, 50	Advance guard, march column
7	4 ADA	57, 61, 62	SA-6, SA-9, ZSU 23-4 platoons
8	6 RSTA	86	Div recon patrol

(b) Attack guidance matrix.

CATEGORY	HP#	WHEN	HOW	RESTRICTIONS
1 (C^3)	25, 26	I	N/EW	Coordinate attack with S2
2 (FS)	1-8, 18-21	A	N	
3 (MAN)	43, 45, 50	A	N	
4 (ADA)	57, 61	A	N/S	Consult FSE
5 (ENG)	70, 71	I	N	
6 (RSTA)	86	A	N	
7 (REC)	16, 105	I	N	TLE<250
8 (N/CH)	81, 82, 19	A	N	Consult TTFC/FSE
9 (POL)	115	A	D	
10 (AMMO)	119	P	D	TLE<300
11 (CL IX)	126	P	N	
12 (LIFT)		P	N	Not HPT
13 (LOC)		P	S	

(c) Fire planning and control.

1. 3d Corps FSCL is BLUE River, eff 300600 Aug.

2. Division coordinated fire line from DY300600 to DY365600 to DY450585, eff 302400 Aug.

(d) Safety.

1. Emergency cancellation of fire in clear text. Fires will be resumed upon failure to authenticate.

2. 2-hour notification required by 3d Corps to change FSCL.

(Classification)

EXAMPLE DIVISION OPORD (WITHOUT FIRE SUPPORT ANNEX) (CONTINUED)

(Classification)

OPORD _____, 52d Mech Div

f. Air Defense. (Omitted)

g. Engineer. (Omitted)

h. Division Troops. (Omitted)

i. DISCOM. (Omitted)

j. Reserve. 1-81 Armor and 1-82 Armor. Be prepared for commitment in area of 2d Bde and 3d Bde, in priority.

k. Coordinating Instructions.

(1) Brigades be prepared to release unengaged units.

(2) Brigades be prepared to receive attachment of units.

4. SERVICE SUPPORT (Omitted)

5. COMMAND AND SIGNAL (Omitted)

Acknowledge.

Montgomery
MG

OFFICIAL:
/s/Siegert
SIEGERT
G3

Annexes: A--Intelligence (omitted)
B--Operation Overlay (omitted)
C--Nuclear Support Plan (to be published)
D--Chemical Support Plan (to be published)
E--Aviation (omitted)
F--Engineer (omitted)
F--Service Support (omitted)
H--Communications-Electronics (omitted)

Distribution: B

(Classification)

GUIDELINES FOR THE FSCOORD

NOTE: Guidelines are keyed to subparagraphs in the preceding OPORD as indicated.

PARAGRAPH	FSCOORD ACTIONS
3a(2)	Write the fires portion of the OPORD and present it to the G3. It is based on the commander's concept and his intent of the operation.
3e(1)(a)	Give general information concerning TACAIR support available to higher headquarters and the commander's desires on use. Give allocation by higher headquarters.
3e(1)(b)	Give planning distribution to subordinate units.
3e(1)(c)	Give miscellaneous coordinating instructions and information concerning close air support not covered by SOP.
3e(2)(a)	Give commander's guidance on employment of chemical fires, planning requirements, and any restrictions and general considerations. Include a reference to the chemical support plan.
3e(2)(b)	Indicate the weapons, by caliber and type, to be carried by each delivery unit. If the PCL is established by a command directive or SOP, refer to that document.
3e(3)(a)	State commander's guidance on FA employment. Give information concerning priority of fires and counterfire. Include information on preparations or counterpreparations, if appropriate. Also include any guidance received on the employment of weapons-locating radars, moving-target-locating radars, and other acquisition systems.
3e(3)(b)	Give organization for combat of FA units organic or attached to the command. A mission must be assigned to each. List FA brigades attached to the command, and show elements thereof. List units in numerical order. Batteries assigned a separate tactical mission under direct supervision of the command are listed in alphabetical sequence immediately after the parent battalion. List those units that have a mission of reinforcing. (Those units that are GSR to the div arty will be indicated in paragraph 1b.)
3e(3)(c)	Give miscellaneous instructions that affect more than one FA unit, such as revisions of missions, instructions on planning of fires, position areas, zones of fire, and establishment of common survey control to allow massing of fires.
3e(4)(a)	State commander's guidance on the employment of naval gunfire.
3e(4)(b)	Give mission statements for all ships providing support.
3e(4)(c)	List any instructions or restrictions that deviate from existing SOPs.
3e(5)(a)	State commander's guidance on employment of nuclear fires, planning requirements, and constraints. Include a reference to the nuclear support plan.
3e(5)(b)	Indicate the weapons, by caliber and yield, to be carried by each delivery unit. If the PNL is established by a command directive or SOP, refer to that document.
3e(5)(c)	Include points of detail not covered above, or refer to an appendix.

GUIDELINES FOR THE FSCOORD (CONTINUED)

PARAGRAPH	FSCOORD ACTIONS
3e(6)(a)	Give mission statements for all supporting offensive EW and target acquisition assets.
3e(6)(b)	Provide a general description of the priority of effort for those EW resources that identify and locate enemy elements for the purpose of targeting.
3e(6)(c)	Provide a general description of the priority of effort for those EW resources that, through jamming or deception, disrupt or degrade the enemy's passage or his receipt or gathering of information by electronic measures.
3e(6)(d)	List any instructions that deviate from existing SOPs.
3e(7)	This is the last subparagraph in the Fire Support paragraph. Its actual numerical designation depends on the number of fire support agencies available to the command. This subparagraph contains instructions applicable to two or more fire support means, such as the high-payoff target list, coordinating measures in effect, and safety measures.
	NOTE: The high-payoff target list may have any number of target priorities. No more than five target types should have the same priority.

Fire Support Annex

At the higher echelons, the fire support plan may be too extensive to be fully contained in paragraph 3 of the OPORD. At any echelon, the force operations officer (who is responsible for preparing the OPORD) may direct a limited fire support input to paragraph 3. In either case, a fire support annex to the OPORD may be necessary. This annex expands the fire support information in paragraph 3 of the OPORD.

The need for the more extensive document, the annex, must be carefully weighed by the operations officer and the FSCOORD. If the fire support plan in paragraph 3 is adequate, a fire support annex is not published.

The example below shows the format of a fire support annex and describes the information presented in each paragraph. In this example, the annex is issued separately.

EXAMPLE FIRE SUPPORT ANNEX FORMAT

(Classification)

(Change from oral orders, if any)

Copy No ___ of ___ copies
(Issuing headquarters)
(Place of issue--may be in code)
(Date-time group of signature)
(Message reference number)

NOTE: This information is omitted when the annex is issued with the OPORD.

ANNEX _____ (FIRE SUPPORT) to OPERATION ORDER _____

Reference: (Maps, charts, and other relevant documents)

Time Zone Used Throughout the Order: ZULU.

1. SITUATION

(Include items of information affecting fire support that are not included in paragraph 1 of the OPORD or that need to be expanded.)

a. Enemy Forces.

(1) (Refer to the intelligence annex, if applicable.)

(2) (Include applicable information on enemy air, artillery, naval gunfire, chemical, and nuclear capabilities.)

b. Friendly Forces.

(1) (Outline operation plan of higher headquarters.)

(2) (Outline the fire support plans of higher and adjacent units.)

(3) (Note additional air, naval gunfire, and nuclear resources supporting the unit.)

(Classification)

EXAMPLE FIRE SUPPORT ANNEX FORMAT (CONTINUED)

(Classification)

ANX _____ (FIRE SPT) to OPORD _____

c. Attachments and Detachments. (Note fire support resources attached and detached, to include effective times if appropriate.)

2. MISSION

(Give a clear, concise statement of the fire support tasks.)

3. EXECUTION

a. Concept of Operation. (Briefly describe the fire support operation to be carried out. Include major groupings of fire support means and priorities and the integration of nuclear and chemical fires with conventional fires, as appropriate.)

b. Air Support.

(1) General. (Outline major roles and/or tasks to be carried out by air elements in support of the operation.)

(2) Allocation. (Give the allocation of CAS and BAI sorties, including any priorities or specific control arrangements.)

(3) Miscellaneous. (Give any points of detail not covered above, or refer to an air support appendix.)

c. Chemical Support.

(1) General. (Describe the concept of employment of chemical munitions.)

(2) PCL. (Present PCL as a detailed table relating types of chemical munitions carried in support of each formation or unit, as applicable.)

(3) Miscellaneous. (Give any points of detail not covered above, or refer to a chemical appendix.)

d. Field Artillery Support.

(Classification)

EXAMPLE FIRE SUPPORT ANNEX FORMAT (CONTINUED)

(Classification)

ANX _____ (FIRE SPT) to OPORD _____

(1) General. (Describe general concept of support. Include major comments on phasing, duration, or general employment.)

(2) Organization for Combat.

(3) Miscellaneous. (Include points of detail not covered above, or refer to an appendix.)

e. Naval Gunfire Support.

(1) General. (Describe the concept of employment. Include limitations related to duration or phasing of the support.)

(2) Organization. (List the grouping or organization for combat to include:

(a) Allocation of observers and/or spotters.

(b) Allocation of ships to units and/or formations.)

(3) Miscellaneous. (Include points of detail not covered above, such as:

(a) Trajectory limitations.

(b) Frequency allocations.

(c) Reference to a naval gunfire support appendix.)

f. Nuclear Support.

(1) General. (Describe the concept of nuclear operations. Include arrangements or controls for initiating nuclear operations and authority to expend.)

(2) PNL. (Prepare as a detailed table relating to yields and weapon systems carried by each formation or unit as applicable. This information can be shown in an appendix.)

(Classification)

EXAMPLE FIRE SUPPORT ANNEX FORMAT (CONTINUED)

(Classification)

ANX _____ (FIRE SPT) to OPORD _____

(3) Miscellaneous. (Include in this paragraph, if applicable:

(a) Deployment of delivery systems (overlay).

(b) Troop safety.

(c) Restrictions and constraints (for example, tree blowdown).

(d) Reference to the nuclear support appendix.)

g. Offensive EW.

(1) EW Organization. (List the organization for combat of offensive EW elements and their mission.)

(2) ESM Priorities. (Describe the priority of effort of the ESM resources.)

(3) ECM Priorities. (Give a general description of the priority of effort of the ECM resources.)

(4) Miscellaneous. (Present points of detail not covered above, or refer to the EW annex or appendix.)

h. Coordinating Instructions. (Present any applicable instructions such as:

(1) Fire support coordination line.

(2) Timings, to include H-hour and the hour for nuclear operations to begin.

(3) Coordinating instructions on targets to be engaged by more than one delivery system.

(4) High-payoff target list.

(5) Modification instructions.)

(Classification)

EXAMPLE FIRE SUPPORT ANNEX FORMAT (CONTINUED)

(Classification)

ANX _____ (FIRE SPT) to OPORD _____

4. SERVICE SUPPORT

a. General. (Refer to a service support annex or administrative/logistics orders.)

b. ASP and/or NASP Locations. (Give the locations of ammunition and nuclear ammunition supply points.)

c. (List daily maintenance requirements and/or expenditure rates for each weapon system.)

5. COMMAND AND SIGNAL

a. Command.

(1) (Give locations of main and alternate headquarters.)

(2) (Give location of the artillery CP and/or FSE.)

b. Signal. (Refer to the communications-electronics annex or the current index to the SOI).

Acknowledge. (Give acknowledgement instructions.)

(Last name of commander)
(Rank)

Authentication.

Appendixes:

Distribution:

(Classification)

Chemical Support Plan

The example below depicts a chemical support plan to support a force OPORD. The format and content are the same for supporting an OPORD with or without a fire support annex. This example plan supports an OPORD that has a fire support annex. The chemical support plan may be issued at a different time than the OPORD and may have a more limited distribution than the OPORD.

EXAMPLE CHEMICAL SUPPORT PLAN

_____
(Classification)

Copy No ___ of ____copies
52d Mech Div
ZEBRO (CH600065), MONROVIA
301345Z August ___
AB101

APPENDIX ___ (CHEMICAL SUPPORT PLAN) to ANNEX _____(FIRE SUPPORT) to OPORD _____

Reference: Map, series JWS 123, MONROVIA, sheet 1 (LODE-VEIN), edition 69, 1:50,000.

Time Zone Used Throughout the Order: ZULU.

1. SITUATION

a. Enemy Forces. Annex _____ to OPORD _____.

b. Friendly Forces. Paragraph _____, OPORD _____.

c. Assumption. The employment of chemical munitions has been authorized by corps.

2. MISSION

FA and air support aircraft provide chemical fires in support of division operations.

_____
(Classification)

EXAMPLE CHEMICAL SUPPORT PLAN (CONTINUED)

(Classification)

APP ___ (CML SPT PLAN) to ANX ___ (FIRE SPT) to OPORD ___,
52d Mech Div

3. EXECUTION

a. Concept. On-call chemicals (CB and VX munitions) are planned for delivery by FA and CAS means.

b. Targets. See Chemical Target List (TAB A).

c. Coordinating Instructions. Predicted weather for period 31 Aug-5 Sep: wind speed/direction--5 mph/SW; average temperature--70. Conditions favor our use of chemicals.

4. SERVICE SUPPORT

a. General. Annex ___ (Service Support) to OPORD ___.

b. Material/Services.

(1) PCL: As directed in Annex ___ (Fire Support) to OPORD ___.

(2) CASP Location: 101 (549520); 102 (617508).

5. COMMAND AND SIGNAL

See OPORD ___.

Acknowledge.

HAYSEED
MG

OFFICIAL:
/s/Siegert
SIEGERT
G3

(Classification)

EXAMPLE CHEMICAL SUPPORT PLAN (CONTINUED)

(Classification)

APP ___ (CML SPT PLAN) to ANX ___ (FIRE SPT) to OPORD ___, 52d Mech Div

TAB A--Chemical Target List

Distribution: C

TAB A (CML TGT LIST) to APP ___ (CML SPT PLAN) to ANX ___ (FIRE SPT) to OPORD ___, 52d Mech Div

Reference: Map, series JWS 123, MONROVIA, sheet 1 (LODE-VEIN), edition 69, 1:50,000.

Time Zone Used Throughout the Order: ZULU.

	(a)	(b)	(c)	(d)
LINE NO	TARGET NO	DESCRIPTION	LOCATION	REMARKS
1	CY2090(a)	Inf assy area	675005	(a)FA attack means
2	CY2100(a)	Def pos	694106	
3	CY2100(b)	Def pos	891131	(b)USAF attack means
*	*	*	*	*
8	CZ2010(b)	Regt CP	058981	

(Classification)

Nuclear Support Plan

The example below shows a nuclear support plan. The plan supports the example fire support annex. Because nuclear support planning progresses at a different rate at times, the distribution for the nuclear support plan may be more limited than that for the OPORD. TAB A shows a subpackage with aimpoints. TAB B shows a subpackage with only weapon requirements.

EXAMPLE NUCLEAR SUPPORT PLAN

(Classification)

Copy No ___ of ___ copies
52d Mech Div
ZEBRO (CH600065), MONROVIA
301345Z August ___
AB101

APPENDIX ___ (NUCLEAR SUPPORT PLAN) to ANNEX ___ (FIRE SUPPORT) to OPORD ___

Reference: Map, series JWS 123, MONROVIA, sheet 1 (LODE-VEIN), edition 69, 1:50,000.

Time Zone Used Throughout the Order: ZULU.

1. SITUATION

a. Enemy Forces. Annex ___ (Intelligence) to OPORD ___.

b. Friendly Forces. Paragraph 1b, OPORD ___.

c. Assumptions.

(1) Corps has requested authority to expend the nuclear package.

(2) Division will receive authority to expend the nuclear subpackage.

2. MISSION

The artillery with the division will execute the division subpackage as part of the corps package.

(Classification)

EXAMPLE NUCLEAR SUPPORT PLAN (CONTINUED)

(Classification)

APP ___ (NUC SPT PLAN) to ANX ___ (FIRE SPT) to OPORD _____, 52d Mech Div

3. EXECUTION

a. Concept. Division plans two subpackages (A and B) to support 3d Corps contingencies A and B.

b. Constraints.

(1) Preclude the following collateral damage with 99 percent assurance in population centers over _____ population.

(a) 5 percent incidence of injuries requiring hospitalization to personnel in the open.

(b) 5 percent incidence of moderate damage to single-story masonry buildings.

(2) Do not exceed negligible risk to unwarned exposed friendly troops.

c. Nuclear Strike Warnings. See division SOP.

d. Nuclear Aimpoints. See TAB A (Subpackage A) and TAB B (Subpackage B).

e. Coordinating Instructions.

(1) Priority of targets: Nuclear delivery means, command and control nodes, fire support units.

(2) Defeat criteria: ITI for tank units within 6 hours travel time of FLOT; LL for motorized forces within 24 hours travel time of FLOT.

4. SERVICE SUPPORT

a. General. Annex ___ (Service Support) to OPORD ___.

b. Material/Services.

(Classification)

EXAMPLE NUCLEAR SUPPORT PLAN (CONTINUED)

(Classification)

APP ___ (NUC SPT PLAN) to ANX ___ (FIRE SPT) to OPORD ____, 52d Mech Div

(1) PNL: As directed in Annex ___ (Fire Support) to OPORD ___.

(2) NASP locations: 101 (549520); 102 (617508).

5. COMMAND AND SIGNAL

See OPORD ___.

Acknowledge.

SCHIEMANN
MG

OFFICIAL:
/s/Beemer
BEEMER
G3

TABS: A--Subpackage A
B--Subpackage B

Distribution: C

TAB A (SUBPACKAGE A) to APP ___ (NUCLEAR SPT PLAN) to ANX ___ (FIRE SPT) to OPORD ___, 52d Mech Div

Reference: Map, series JWS 123, MONROVIA, sheet 1 (LODE-VEIN), edition 69, 1:50,000.

Time Zone Used Throughout the Order: ZULU.

MEANS	YIELD	TARGET NO	DESCRIPTION	AIMPOINT
155-mm how	0.2	CZ1000	Choke point	921851
		CZ1010	Ave of approach	258841
		CZ1020	Ave of approach	981845
*	*	*	*	*
	1.0	CZ1030	Reserve area	914928
		CZ1040	Reserve area	968938

(Classification)

EXAMPLE NUCLEAR SUPPORT PLAN (CONTINUED)

_____
(Classification)

TAB A (SUBPACKAGE A) to APP _____ (NUC SPT PLAN) to ANX _____ (FIRE SPT) to OPORD _____, 52d Mech Div

MEANS	YIELD	TARGET NO	DESCRIPTION	AIMPOINT
203-mm how	2.0	CZ1220	Choke point	917901
		CZ1230	Brigade	988916
*	*	*	*	*
	8.0	CZ1420	Assy area	921880
Lance	20.0	CZ1430	Tank assy area	942021
TACAIR	10.0	CZ1440	Tank assy area	941098
	10.0	CZ1450	Supply dump	041097

Time span: _____ minutes.

Constraints: Paragraph 3b of Nuclear Support Plan

TAB B (SUBPACKAGE B) to APP ___ (NUCLEAR SPT PLAN) to ANX ___ (FIRE SPT) to OPORD _____, 52d Mech Div

Reference: Map, series JWS 123, MONROVIA, sheet 1 (LODE-VEIN), edition 69, 1:50,000.

Time Zone Used Throughout the Order: ZULU.

1. General:

a. Number of weapons by yield authorized for 52d Mech Subpackage B to support corps Package RED.

	DIV ARTY	70 FA BDE
W5Y1	10	8
W10Y1		5
W10Y2		6
W10Y3		9

b. Area of subpackage: See overlay. Phase Line RED depicts the forward limits of the division subpackage. The division rear and lateral boundaries depict the left, right, and rear limits of the package.

_____
(Classification)

EXAMPLE NUCLEAR SUPPORT PLAN (CONTINUED)

(Classification)

TAB B (SUBPACKAGE B) to APP _____ (NUC SPT PLAN) to ANX _____ (FIRE SPT) to OPORD _____, 52d Mech Div

c. Time authorized for employment of subpackage: H+24 to H+48.

d. Purpose of subpackage:

(1) Intent: The division will destroy the first-echelon assault division first- and second-echelon regiments. The division subpackage is a part of the corps package.

(2) Planning guidance: Plan fires to destroy first-echelon regiments. Priority of attack to nuclear delivery units, then to command and control and maneuver units on Avenue of Approach B.

(3) Constraints.

(a) Preclude damage to the bridge at _____. This bridge is required for a division counterattack.

(b) MSD for NUE and EWP is shown on the overlay.

(c) The LSD for TBD and the bridge is shown on the overlay.

(d) MSDs on boundaries are in effect out to the FSCL.

2. Recommended number of initial aimpoints by avenue of approach:

	DIV ARTY		70 FA BDE		
	W5Y1	W5Y1	W10Y1	W10Y2	W10Y3
AA A	3	2	1	1	3
AA B	5	4	3	3	4
AA C	2	2	1	2	2

3. Final aimpoints will be determined following deconfliction at corps and prior to H+24.

(Classification)

TACFIRE Considerations

TACFIRE, through its command and control functions, helps the commander and FSCOORD manage their resources. It provides more timely and accurate information and gives them parameters with which to influence computer solutions.

Commander's criteria are a wide range of parameters a FSCOORD can input into the computer so that commander's guidance and the tactical situation are considered. These parameters guide the computer processing. Although most units routinely prescribe the criteria in SOPs, modifications necessary to influence the tactical and technical fire control solutions unique to each fire plan or operation may be necessary.

The fire support plan includes specific commander's criteria when the criteria differ from SOP. The FSCOORD should consider the commander's criteria listed to the left and should include them in the fire support plan as required.

The FSCOORD should review the established attack criteria (FM;ATTACK:). Criteria other than SOP are included in the OPORD.

Mutual support assignments are published as part of the organization for combat.

The artillery target intelligence (ATI) function aids in the management of targeting information. Critical ATI criteria are as shown below.

COMMANDER'S CRITERIA FOR TACFIRE

MNEMONIC	DEFINITION
AMOL	Critical ammunition level
ASA	Available supply rate/controlled supply rate
ECOF	Effects cutoff factor
PZONE	Priority zone of operations for priority of fires
PTYPE	Priority target type to attack
PSHELL	Priority shell type to attack with
MLRSIZE	Minimum size of target to attack with MLRS
MAXVOL	Maximum number of fire unit volleys per target
MAXBN	Maximum number of battalions per target
EFF	Desired effects on nuclear targets
MAXYLD	Maximum nuclear yield available for analysis
FUSEL	Fire unit ordering
XCLUDE	Fire unit and ammunition exclusions

ATI CRITERIA FOR TACFIRE

MNEMONIC	DEFINITION
FMMOD	ATI-generated fire mission criteria
TBMOD	Target buildup report criteria
SVMOD	Target combination criteria
SRI	Standing requests for information allocations

NOTE: More information on TACFIRE procedures is in TC 6-40A.

APPENDIX E

TARGET NUMBERING SYSTEM

This appendix implements STANAG 2147/QSTAG 221, Edition 4, Amendment 2.

To designate nonnuclear targets for fire support operations, the Army adheres to the provisions of STANAG 2147 and QSTAG 221. Target designators consist of two letters followed by four numerals; for example, AA1000. This numbering system is used for each corps-size force.

Normally, nuclear targets are not assigned a special block of target numbers. A target should be assigned a number when it is received at a fire planning agency. If a target is selected for attack, the most appropriate means of attacking the target will be used (nuclear, chemical, or conventional) as determined by target analysis. That analysis is guided by the commander's attack guidance and other factors (nature of target, munitions available, and so forth).

First Letter Designator

The first letter of the two-letter group designates a particular nation or a corps associated with a particular nation as shown in the table below.

Each army headquarters will allocate a first letter to its corps. A corps may be assigned more than one letter, Letters assigned to each nation may be reused as long as the adjacent corps of that nation do not share the same letter.

NATIONAL IDENTIFYING LETTERS

NATION	LETTER	NATION	LETTER
Australia	V	Netherlands	H
Belgium	B	Norway	N
Canada	C, Z	Portugal	P
Denmark	D	Spain	S
France	F	Turkey	T
Germany	G	United Kingdom	U, X
Greece	E	United States	A, K, Y, W
Italy	R	AMF (L)	M
Luxemburg	L		

LEGEND:
AMF (L) = ACE (Allied Command Europe) Mobile Force (Land)

Second Letter Designator

The second letter is assigned by corps down to brigade level. Also, second letter designators are made for corps artillery CPs, corps FS cells, div arty CPs, and division FS cells. The letters I and O are not used.

Blocks of Numbers

Blocks of numbers are assigned by those headquarters having two assigned letters. Field artillery elements assign blocks from 0001 through 7999 as needed. A battalion- or squadron-size element with a block of numbers suballocates numbers. Assignments are shown in the following tables.

SAMPLE LETTER DESIGNATORS FOR XII (US) CORPS WITH 54TH MECH DIV AND 16TH ARMOR DIV

ORGANIZATION	LETTER DESIGNATOR
12th (US) Corps	A
12th (US) Corps Artillery CP	AX
12th (US) Corps FS Cell	AY
54th Mech Div FS Cell	AA
54th Mech Div Arty CP	AB
1st Bde, 54th Mech Div	AC
2d Bde, 54th Mech Div	AD
3d Bde, 54th Mech Div	AE
4th Bde, 54th Mech Div	AF
16th Armd Div FS Cell	AG
16th Armd Div Arty CP	AH
1st Bde, 16th Armd Div	AJ
2d Bde, 16th Armd Div	AK
3d Bde, 16th Armd Div	AL
4th Bde, 16th Armd Div	AM

ASSIGNMENT OF BLOCKS OF NUMBERS

NUMBER	ASSIGNED TO
0001-1999	FS cell
2000-2999	FSO, lowest numbered maneuver battalion or squadron[1]
3000-3999	FSO, second lowest numbered maneuver battalion or squadron
4000-4999	FSO, third lowest numbered maneuver battalion or squadron
5000-6999	Additional FSOs
7000-7999	FDC, direct support artillery
8000-8999	Counterfire targets
9000-9999	Toxic chemical targets

[1]Lowest regimental number.

SUBASSIGNMENT OF BLOCKS OF NUMBERS

NUMBERS	ASSIGNED TO
000-199	FS cell
200-299	FIST, Co A
300-399	FIST, Co B
400-499	FIST, Co C
500-699	Additional FISTs and/or COLTs
700-799	Battalion mortar platoon, squadron, or howitzer battery
800-999	As required

APPENDIX F

FIRE SUPPORT COORDINATING MEASURES

This appendix implements STANAG 2099/QSTAG 531, Edition 4.

The FSCOORD coordinates all fire support impacting in the area of responsibility of his supported maneuver commander, including that requested by the supported unit. He ensures that fire support will not jeopardize troop safety, will interface with other fire support means, and/or will not disrupt adjacent unit operations. Fire support coordinating measures help him in those efforts. They are designed to facilitate the rapid engagement of targets and, at the same time, provide safeguards for friendly forces.

STANAG 2099/QSTAG 531

Some fire support coordinating measures described here have not yet been agreed to by NATO and American, British, Canadian, and Australian (ABCA) allies. The US terms "coordinated fire line, restrictive fire line, restrictive fire area," and "fire coordination line" are being proposed by the US for inclusion in STANAG 2099/QSTAG 531. The fire support coordination line and the optional use of the no-fire line (NFL) are the only measures agreed to in STANAG 2099/QSTAG 531. The US has entered a reservation using coordinated fire line in lieu of no-fire line.

Establishment

All fire support coordinating measures except boundaries are established by the supported maneuver commander on the basis of recommendations by the FSCOORD. The FSCOORD's recommendations are based on the force commander's guidance, location of friendly forces, the battle plan, and anticipated enemy actions.

Graphic Portrayal

Once established, coordinating measures are displayed on maps, firing charts, and overlays and are stored in computers. Graphic portrayal includes, as a minimum, the visual code, the abbreviation for the measure, the establishing headquarters, and the effective date-time group (DTG). Often, the date-time group is shown as a from-to time. Usually, coordinating measures are labeled at each end of a line or within the graphic, space permitting. Both the graphics and the lettering are in black for all measures.

Boundaries

In various operations, boundaries are used by the maneuver commander to indicate the geographical area for which a particular unit is responsible. They describe a zone of action or sector of responsibility for a maneuver unit. Normally, they are designated along terrain features easily recognizable on the ground. They are so situated that key terrain features and avenues of advance or approach are completely included in the area assigned to one unit. A boundary is the basic fire support coordinating measure. Boundaries are both permissive and restrictive in nature. They are restrictive in that no fire support means may deliver fires across a boundary unless the fires are coordinated with the force having responsibility within the boundary or unless a

permissive fire support coordinating measure is in effect that would allow firing without further coordination. Fires delivered near boundaries also should be coordinated with the adjacent unit. They are permissive in that a maneuver commander, unless otherwise restricted, enjoys complete freedom of fire and maneuver within his own boundaries. Boundaries apply to both the maneuver of units and the employment of fire, to include conventional and special ammunition and their effects. Boundaries are displayed as solid black lines with the appropriate designation of the unit(s) to which the boundary applies. Proposed or planned boundaries are displayed as dashed black lines. Boundaries are also used by fire support personnel to designate the zone of fire for supporting field artillery and naval gunfire ships.

BOUNDARY

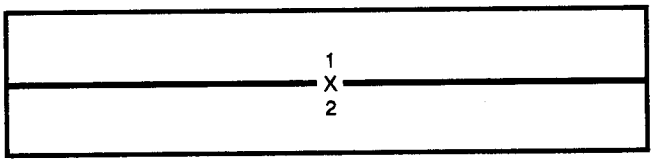

Zones of Fire

Zones of fire are assigned to FA and NGF units for the control of fires laterally and in depth to support operations. Lateral limits within which a unit must be able to fire may be designated by azimuths or boundaries. Zones in depth may be designated by minimum or maximum range lines or by forward or rearward extensions of the lateral boundaries of the supported force. The zone of fire for an artillery unit is dictated by the assigned tactical mission. For example, the direct support mission specifies that the zone of fire is the zone of action of the supported maneuver force. Uniform coverage is not a requirement, since the maneuver commander may want to weight certain portions of his zone of action with a fire support means such as artillery.

Types of Measures

With the exception of boundaries, fire support coordinating measures are either permissive or restrictive. In essence, the primary purpose of a permissive measure is to facilitate the attack of targets. The establishment of a restrictive measure imposes certain requirements for specific coordination before the engagement of those targets affected by the measure. Therefore, the primary purpose of a restrictive measure is to safeguard friendly forces.

Permissive Measures

Coordinated Fire Line

A coordinated fire line is a line beyond which conventional or improved conventional indirect-fire means (mortars, field artillery, and NGF ships) may fire at any time within the zone of the establishing headquarters without additional coordination. The purpose of the CFL is to expedite the attack of targets beyond it. Usually, the CFL is established by a brigade or a division, but it may be established by a maneuver battalion. It is located as close to the establishing unit as is possible, without interfering with maneuver forces, to open up the area beyond to fire support. Brigade CFLs may be consolidated at division level as a division CFL designated for the division zone of action. If any modifications to the brigade CFLs are considered, they must be coordinated with the brigades to ensure complete compatibility with their battle plans. In essence, the brigade commanders establish CFLs, and the division commander merely consolidates them and designates a division coordinated fire line.

COORDINATED FIRE LINE

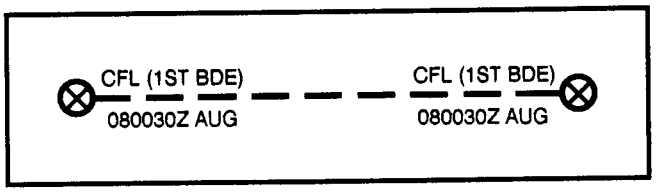

The CFL is graphically portrayed by a dashed black line with CFL followed by the establishing headquarters (brigade or division) in parentheses above the line and a date-time group below the line. Locations for CFLs are disseminated by message and/or overlay through both maneuver and fire support channels to higher, lower, and adjacent maneuver and supporting units.

Fire Support Coordination Line

An FSCL may be established by the corps within its area of operation to support its concept of the operation. It must be coordinated with the appropriate tactical air commander and other supporting elements. The purpose of this permissive fire control measure is to allow the corps and its subordinate and supporting units (such as the Air Force) to expeditiously attack targets of opportunity beyond the FSCL. The attack of targets beyond the FSCL by Army assets should be coordinated with supporting tactical air. This coordination is defined as informing and/or consulting with the supporting tactical air component. However, the inability to effect this coordination does not preclude the attack of targets beyond the FSCL. The interface within the FS cell between the various fire support representatives provides an excellent means of initially coordinating the attack of targets in this area. Targets of opportunity beyond the FSCL are attacked by a unit if such attacks support the operations of any one of the following:

- The attacking unit.
- The higher headquarters of that unit.
- A headquarters supported by that unit.

Three conditions should be met before an FSCL is established by the corps:

- A portion of the corps deep operations area does not require selective targeting to shape the deep operations fight.
- The expeditious attack of targets beyond the FSCL will support the operations of the corps, the attacking unit, or the higher headquarters of the attacking unit.
- The corps and its supporting units are willing to accept the possible duplication of effort which may result from dual targeting beyond the FSCL.

The primary consideration for placement of an FSCL is that it should be located beyond the area in which the corps intends to shape its deep operations fight. The deep operations fight is shaped by restricting the movement of enemy follow-on forces to influence the time and location of their arrival into the close operations area. This usually requires selective

FIRE SUPPORT COORDINATION LINE

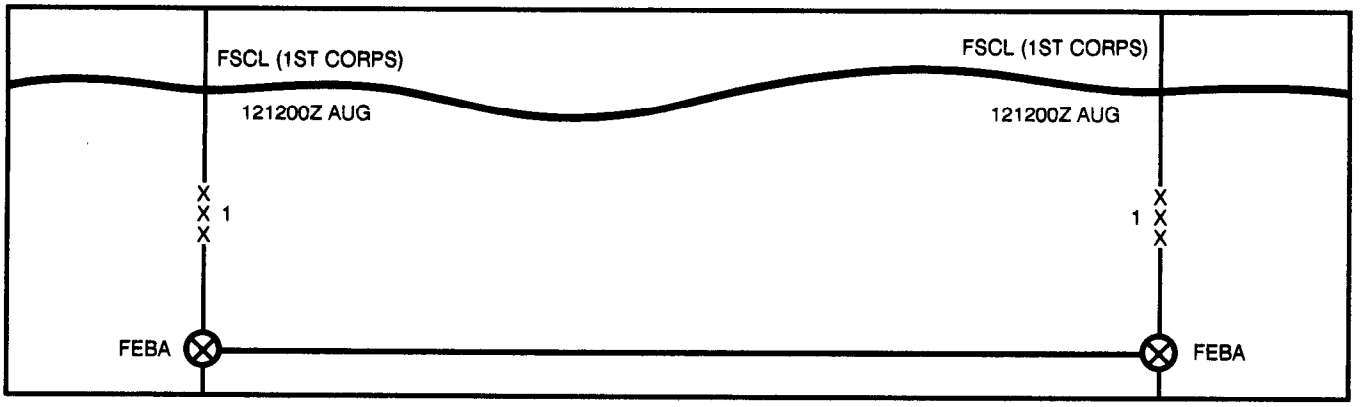

targeting and coordinating of fires in the area where shaping is to occur. Normally, the FSCL is established well beyond the range of cannon and multiple rocket FA systems to provide sufficient depth to shape the fight against a Soviet-type echeloned attack. In this case, only corps missile systems, tactical air support, and possibly attack helicopters have the range capabilities to attack targets beyond the FSCL.

However, the corps deep operations concept may not seek to shape the fight but only focus on maximizing the destruction of enemy units and/or systems. Then the corps should establish the FSCL as close as possible to its close operations area. This maximizes the number of fire support systems capable of firing beyond the FSCL. A restrictive fire area or a no-fire area can be used to protect key facilities or terrain features beyond the FSCL. This would still allow for an FSCL short of the facility or terrain feature which must be protected.

Whether attacking or defending, the corps usually designates an initial FSCL and plans for a series of on-order FSCLs. A change of FSCL location usually is transmitted well ahead of time to higher, lower, adjacent, and supporting headquarters.

Dissemination of the FSCL is the same as that for the coordinated fire line.

NOTE: The above information is in compliance with the provisions of STANAG 2099/QSTAG 531. However, FM 100-26 states "Areas on the battlefield should never be considered the absolute province of either USA or USAF commanders. Both component commanders will have a continuing interest in the enemy regardless of depth. They will want to collect intelligence and attack– or cause to be attacked – targets that will affect their future operations. The planning to attack targets in the second echelon should be coordinated among components, concurrence sought, and if not obtained, the matter should be referred to the next higher headquarters."

FSCL employment considerations are as follows:

- Type of operation — offensive or defensive, and so forth.
- Deep operations with maneuver.
- Name and location of Threat.
- Target acquisition capabilities.
- Allocations of air support.
- Future operations.

Free-Fire Area

A free-fire area (FFA) is a specific area into which any weapon system may fire without additional coordination with the establishing headquarters. It is used to expedite fires and to facilitate the jettison of munitions when aircraft are unable to drop them on a target area. Usually, the FFA is established by a division or higher commander. It is located on identifiable terrain when possible or by grid designation when necessary. It is disseminated through both maneuver and fire support channels.

FREE-FIRE AREA

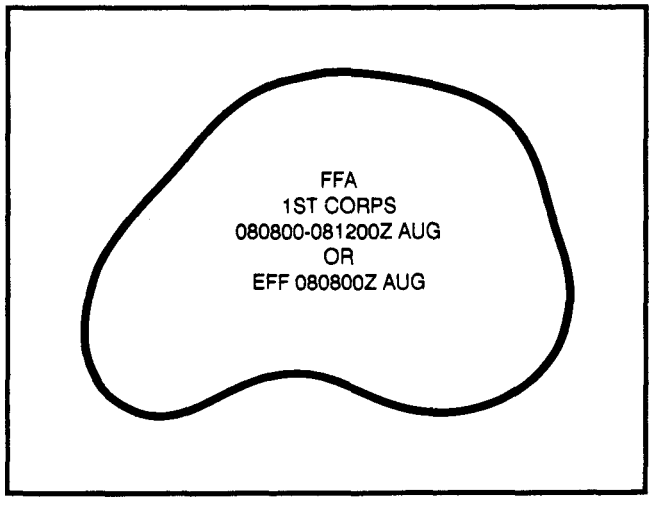

RESTRICTIVE FIRE LINE

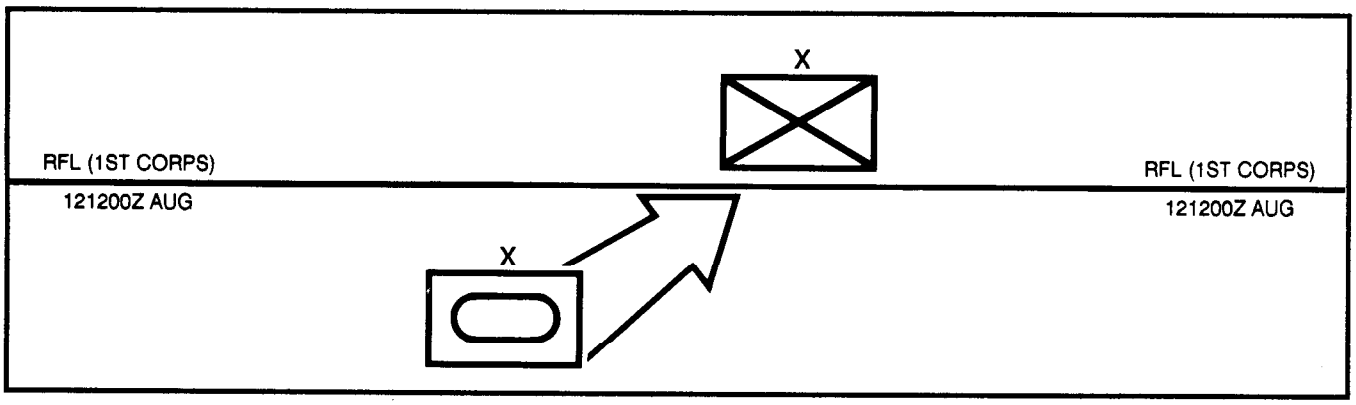

Restrictive Measures

Restrictive Fire Line

This is a line established between converging friendly forces (one or both may be moving) that prohibits fires or the effects of fires across the line without coordination with the affected force. The purpose of the line is to prevent interference between the converging friendly forces. It is established by the commander common to the converging forces. It is located on identifiable terrain, usually closer to the stationary force. Its location is disseminated in the same manner as that of a coordinated fire line.

Airspace Coordination Area

The ACA is primarily a coordination effort of TACAIR and indirect fires; therefore, fire support people are the focal planning point.

The ACA is a block of airspace in the target area in which friendly aircraft are reasonably safe from surface fires. Occasionally, it may be a formal measure (a three-dimensional box in the sky). More often, it is informal. The purpose of the ACA is to allow the simultaneous attack of targets near each other by multiple fire support means, one of which normally is air. For example, tactical aircraft, field artillery, and naval gunfire can attack the same target complex or targets close to one another while operating within the parameters of an established ACA.

Implementation of the formal ACA takes a significant amount of time. Therefore, informal ACAs are most often used and are the preferred method. The informal ACA can be established by using time, lateral separation, or altitude to provide separation between surface-to-surface and air-delivered fires. An example would be to designate a road as the lateral separation feature and direct air support to stay north of the road and restrict FA and naval gunfire to airspace and targets south of the road. The informal ACA can be established at task force or higher level and is not normally displayed on maps, charts, or overlays.

Occasionally, there may be a requirement for a separate brigade or higher-level commander to establish a formal ACA. Its location is coordinated by the FS cell with the A^2C^2 element and the FDC. It is located above the target area as recommended to the FS cell by the air liaison element. The size of the area is dictated by the type of aircraft and the ordnance in use.

Vital information defining the formal ACA includes minimum and maximum altitudes

AIRSPACE COORDINATION AREA

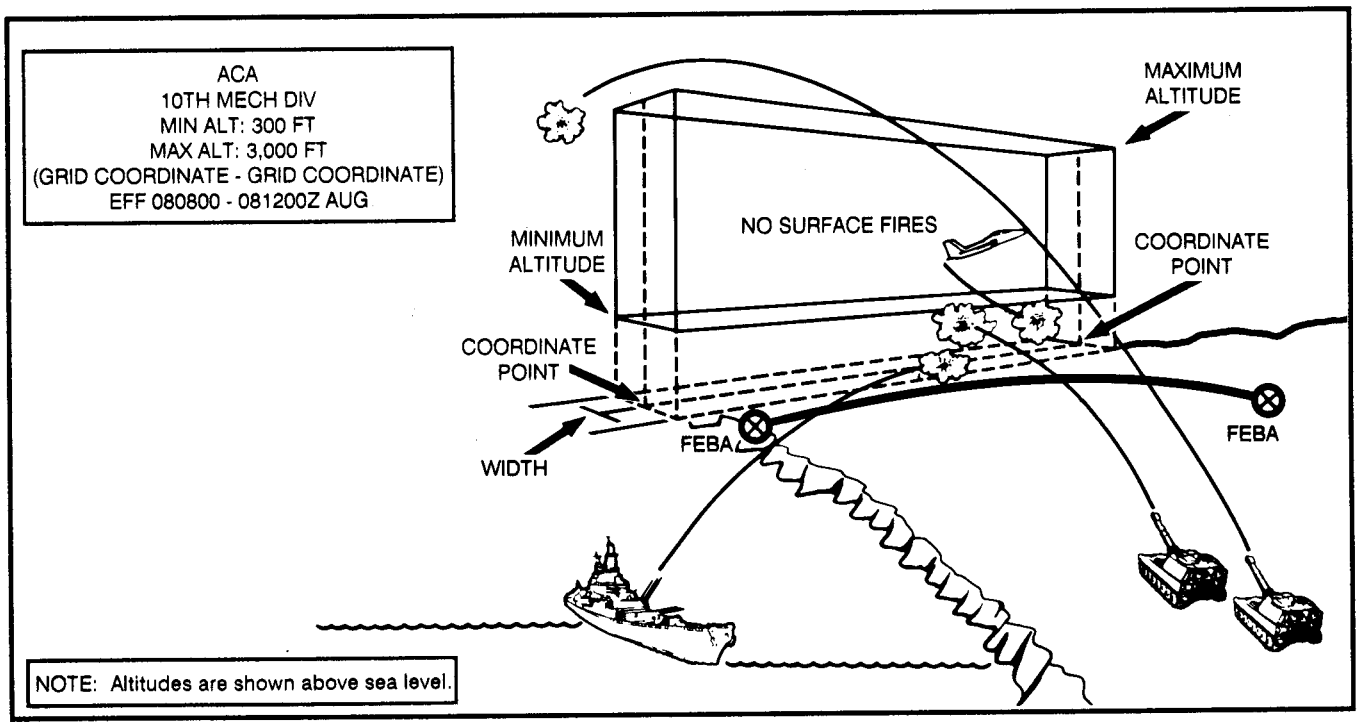

(alt), a baseline designated by grid coordinates at each end, the width (either side of the baseline), and the effective times. Information concerning the area is disseminated in the same way that it is for the coordinated fire line.

No-Fire Area

An NFA is an area into which no fires or effects of fires are allowed. Two exceptions are –

- When establishing headquarters approves fires temporarily within the NFA on a mission-by-mission basis.
- When an enemy force within the NFA engages a friendly force. The commander may engage the enemy to defend his force.

The purpose of the NFA is to prohibit fires or their effects in the area. Usually, it is established by a division or corps on identifiable terrain, when possible. Also, it may be located by grid or by a radius (in meters) from a center point. Like other fire support coordinating measures, its location is disseminated through both maneuver and fire support channels to concerned levels.

NO-FIRE AREA

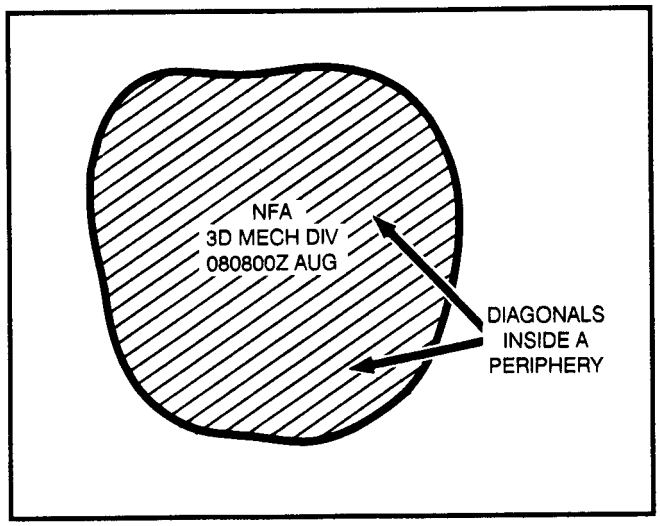

Restrictive Fire Area

An RFA is an area in which specific restrictions are imposed and in which fires that exceed those restrictions will not be delivered without coordination with the establishing headquarters. The purpose of the RFA is to regulate fires into an area according to the stated restrictions. It is established by maneuver battalion or higher echelons of command. On occasion, an RFA may be established by a company operating independently. Usually, it is located on identifiable terrain, by a grid or by radius (in meters) from a center point. Its location is disseminated in the same manner as that of the coordinated fire line. Restrictions may be shown on a map or an overlay, or reference can be made to an OPORD that states the restrictions.

RESTRICTIVE FIRE AREA

GLOSSARY

A

A^2C^2	Army airspace command and control
AA	avenue of approach
AAG	army artillery group (Soviet)
AAGS	Army air-ground system (counterair)
ABCA	American, British, Canadian, and Australian
ABCCC	airborne battlefield command and control center
abn	airborne
ACA	airspace coordination area
ACC	air component commander; airspace control center
ACE	assistant corps engineer, Allied Command Europe
ACR	armored cavalry regiment
AD	air defense
ADA	air defense artillery
ADAM	area denial artillery munitions
ADCOORD	air defense coordinator
ADE	assistant division engineer
admin/log	administration/logistics (radio net)
ADP	automatic data processing
AFAC	airborne forward air controller
AFSCOORD	assistant fire support coordinator
AFSO	aerial fire support observer
AFSOUTH	Allied Forces Southern Europe
AHB	attack helicopter battalion
AI	air interdiction
ALCC	airlift control center
ALCE	airlift control element
ALO	air liaison officer
alt	altitude
AMLS	airspace management liaison section
ammo	ammunition
AMF	ACE Mobile Force (Land)
ANGLICO	air and naval gunfire liaison company
anx	annex
AO	area of operations
AOA	amphibious objective area
APP	appendix
AR/LCC	Army/land component commander
ARLO	air reconnaissance liaison officer
armd	armored
ASB	aviation support battalion
ASAP	as soon as possible
ASCE	air support coordination element
ASG	area support group
ASIC	all-source intelligence center
aslt hel	assault helicopter
ASOC	air support operations center
ASP	ammunition supply point
ASPC	all-source production center
ASPS	all-source production section
assy	assembly
ATACMS	Army tactical missile system
ATGM	antitank guided missile
ATI	artillery target intelligence
ATIZ	artillery target intelligence zone
atk hel	attack helicopter
ATO	air tasking order
ATOC	allied tactical operations center
ave	avenue
avn	aviation
AWACS	airborne warning and control system

B

BAI	battlefield air interdiction
BB	battleship
BCE	battlefield coordination element
BDA	battle damage assessment
bde	brigade
bn	battalion
BOS	battlefield operating system
btry	battery

C

C^2	command and control
C^2CM	command and control countermeasures
C^3	command, control, and communications
C^3CM	command, control, and communications countermeasures
CA	civil affairs, counterair
CAA	combined arms army (Soviet)
CAAB	cavalry air assault brigade
CAB	combined arms battalion
CAC	combat aviation company
CAS	close air support
CASP	chemical ammunition supply point
CATF	commander of the amphibious task force
cav	cavalry
CBMM	corps ballistic meteorology manager
cbt	combat
CCT	combat control team
cdr	commander
CENTAG	Central Army Group
CEWI	combat electronic warfare intelligence
CF	command/fire direction (radio net)
CFA	covering force area
CFFZ	call-for-fire zone
CFL	coordinated fire line
CFZ	critical friendly zone
CG CGN	guided missile cruiser
CLF	commander landing force
CLGP	cannon-launched guided projectile
cml	chemical
CM&D	collection, management, and dissemination
co	company
COA	course of action
COLT	combat observation/lasing team
COMAFSOUTH	Commander Allied Forces South
cmd	command (radio net)
COMMZ	communications zone
COMSEC	communications security
COP	combat operations post (Soviet)
COSCOM	corps support command
CP	command post
CRC	control and reporting center
CRP	control reporting point
CS	combat support
CSAB	combat service support battalion
CSR	controlled supply rate
CSS	combat service support
CTAD	corps target acquisition detachment
CTOCSE	corps tactical operations center support element
CZ	censor zone

D

DA	Department of the Army
DAG	division artillery group (Soviet)
DASC	direct air support center; division air support coordination center (Marines)
DD	destroyer

DDG	guided missile destroyer
def	defensive
det	detachment
DF	direction finding
DFSCOORD	deputy fire support coordinator
DGZ	desired ground zero
DISCOM	division support command
div	division
div arty	division artillery
DMD	digital message device
DPICM	dual-purpose improved conventional munitions
DS	direct support
DSO	division signal officer
DST	decision support template
DTG	date-time group
DTOCSE	division tactical operations center support element

E

EAC	echelons above corps
EADS	enemy air defense system
EC	electronic combat
ECM	electronic countermeasures
EMP	electromagnetic pulse
engr	engineer
ENSCE	enemy situation correlation element
EPB	electronic preparation of the battlefield
ESM	electronic support measures
ETAC	enlisted terminal attack controller
EW	electronic warfare
EWP	emergency warned protected
EWS	electronic warfare section
EWSE	electronic warfare support element
EWSO	electronic warfare staff officer

F

F	fire (radio net)
FA	field artillery
FAC	forward air controller
FACP	forward air control post
FAIO	field artillery intelligence officer
FARP	forward arming and refueling point
FAS	field artillery section
FASCAM	family of scatterable mines
FCL	fire coordination line
FCT	firepower control team
FD	fire direction (radio net)
FDC	fire direction center
FDS	fire direction system
FDO	fire direction officer
FEBA	forward edge of the battle area
FF	frigate
FFA	free-fire area
FFG	guided missile frigate
FIN	finance
FIST	fire support team
fld	field
FLIR	forward-looking infrared
FLO	fighter liaison officer
FLOT	forward line of own troops
FM	field manual
FMF	Fleet Marine Force
FOB	forward operational base
FPF	final protective fire
FRAGO	fragmentary order
FRG	Federal Republic of Germany
FROG	free rocket over ground (Soviet weapon)
FS	fire support
FSA	fire support area

FSB	forward support battalion
FS cell	fire support cell
FSCL	fire support coordination line
FSCOORD	fire support coordinator
FSE	fire support element
FSO	fire support officer
FSS	fire support station (Navy)
FWD	forward

G

G1	Assistant Chief of Staff, G1 (Personnel)
G2	Assistant Chief of Staff, G2 (Intelligence)
G3	Assistant Chief of Staff, G3 (Operations and Plans)
G4	Assistant Chief of Staff, G4 (Logistics)
G5	Assistant Chief of Staff, G5 (Civil Affairs)
GLO	ground liaison officer
gp	group
GS	general support
GSAC	general support aviation company
GS-LAR	general support –light artillery and rocket
GSR	general support reinforcing
GT	gun-target (line, distance, and so forth)
G/VLLD	ground/vehicular laser locator designator

H

H	heavy
HC	hydrogen chloride
HF	high frequency
HHB	headquarters and headquarters battery
HHC	headquarters and headquarters company
HHT	headquarters and headquarters troop
HIP	howitzer improvement program
HMMWV	high-mobility multipurpose wheeled vehicle
HNS	host nation support
how	howitzer
HPT	high-priority target
HQ	headquarters
hr	hour
HUMINT	human intelligence
HVT	high-value target

I

ICM	improved conventional munitions
IEW	intelligence and electronic warfare
INF	infantry
INFLIGHTREP	in-flight report
intel	intelligence
IP	initial point
IPB	intelligence preparation of the battlefield
IPIR	initial photographic interpretation report
IR	infrared, information requirements
ITI	immediate transient incapacitation
ITR	independent tank regiment (Soviet)

J

J-SEAD	joint suppression of enemy air defenses
J-STARS	joint surveillance target attack radar system
JAART	joint attack of artillery
JAAT	joint air attack team
JATF	joint amphibious task force

JCS	Joint Chiefs of Staff
JFC	joint force commander
JOC	joint operations center
JTF	joint task force

K

km	kilometer
KT	kiloton

L

LAB	**light** assault battalion
LC	line of contact
LCC	land component commander
LD	lime of departure
LD/LC	line of departure is line of contact
LIC	low-intensity conflict
LL	latent lethality
LO	liaison officer
LOC	line of communication
LOI	letter of instruction
LOS	lime of sight
LRSU	long-range surveillance unit
LSD	least separation distance

M

MAC	Military Airlift Command
MACCS	Marine air command and control system
MAGTF	Marine air-ground task force
maint	maintenance
MAN	maneuver
max	maximum
MBA	main battle area
MC	mobility corridor
MCC	movement control center
MCS	multichannel communications system
mech	mechanized
med	medium
met	meteorological
METT-T	mission, enemy, terrain and weather, troops and time available
MI	military intelligence
MIC	mid-intensity conflict
min	minutes
MLRS	multiple launch rocket system
mm	millimeter
MOPP	mission-oriented protective posture
MP	milky police
MRB	motorized rifle battalion (Soviet)
MRD	motorized rifle division (Soviet)
MRL	multiple rocket launcher (Soviet)
MRR	motorized rifle regiment (Soviet), minimum risk route
MSB	main support battalion
MSD	minimum safe distance
MSE	mobile subscriber equipment
MSR	main supply route
MTLR	moving-target-locating radar

N

NAI	named area of interest
NALO	naval aviation liaison officer
NAIRA	nuclear accident incident response and assistance
NASP	nuclear ammunition supply unit
NATO	North Atlantic Treaty Organization
NBC	nuclear, biological, chemical
N/CH	nuclear and chemical
NC	nuclear and chemical
NCO	noncommissioned officer
NFA	no-fire area
NFL	no-fire line

NGF naval gunfire
NGLO naval gunfire liaison officer
NGO naval gunfire officer
NLT not later than
nuc nuclear
NUE negligible risk to unwarned exposed personnel
NWLE nuclear weapons logistics element

O

OCA offensive counterair
off officer
OP observation post
OPCON operational control
OPLAN operation plan
OPORD operation order
ops operations (radio net)
ops/intel operations/intelligence (radio net)

P

PADS position and azimuth determining system
PAL permissive action link
PCL prescribed chemical load
PDRA People's Democratic Republic of Atlantica
PGB precision guided bomb
PIR priority intelligence requirements
PL phase line
plt platoon
PNL prescribed nuclear load
PNRM People's National Revolution Movement
PNS prescribed nuclear stock
POL petroleum, oil and lubricants
POMCUS pre-positioning of material configured to unit sets
pos position
PRF pulse repetition frequency (laser code)
PSS personnel services support
PSYOP psychological operations
PUP pull-up point

Q

QSTAG quadripartite standardization agreement

R

R reinforcing
RAAMS remote antiarmor mine system
RAG regimental artillery group (Soviet)
RAOC rear area operations center
RATT radio teletypewriter
RC Reserve Component
REC radio electronic combat (Soviet)
RECCE recornnaissance (USAF)
RECCEXREP reconnaissance exploitation report
recon reconnaissance
regt regiment
retrans retransmission station
RFA restrictive fire area
RFL restrictive fire line
RLO reconnaissance liaison officer
RSO reconnaissance and survey officer
RSOP reconnaissance, survey, and occupation of position
RSR required supply rate
RSTA reconnaissance, survey, and target acquisition

S

SACC supporting arms coordination center
SALT supporting arms liaison team

SASP	special ammunition supply point
SEAD	suppression of enemy air defenses
SEMA	special electronic mission aircraft
SIG	signal
SIGINT	signal intelligence
SLAR	side-looking airborne radar
SLIR	side-looking infared
SLR	side-looking radar
SOF	special operations force
SOI	signal operating instructions
SOP	standing operating procedures
SP	self-propelled
SPCE	survey planning and coordination element
SPCO	survey planning and coordination officer
spt	support
sr	senior
SRC	standard requirement code
SSB	single sideband
SSM	surface-to-surface missile
STANAG	standardization agreement
STRIKWARN	nuclear strike warning
sup	supply
SUPIR	supplemental photographic interpretation report

T

T	towed
TA	target acquisition
TAA	tactical assembly area
TAACOM	theater army area command
TAB	target acquisition battery
TACA	tactical air coordinator, airborne
TACAIR	tactical air
TACC	tactical air control center
TACCS	tactical air command and control specialist
TACFIRE	tactical fire direction system
TACMS	tactical missile system
TACON	tactical control
TACP	tactical air control party
TACS	tactical air control system
TAF	tactical air force
TAI	target area of interest
TALO	tactical airlift liaison officer
TAMCA	theater army movement control agency
TAOC	tactical air operations center
TAP	tactical acquisition plan
TAR	tactical air reconnaissance
TARC	target acquisition reconnaissance company
TCAE	technical control and analysis element
TCF	tactical combat force
TDA	target damage assessment
TEREC	tactical electronic reconnaissance
TF	task force
TFW	tactical fighter wing
TLE	target location error
TOC	tactical operations center
TOE	tables of organization and equipment
TOF	time of flight
TOT	time on target
TOW	tube-launched, optically tracked, wire-guided missile
TPFDD	time phase force development data
TPS	target processing section
trans	transportation
TRT	TEREC remote terminal
TVA	target value analysis
TVD	Theater of Military Operations (Soviet)

U

UAV	unmanned aerial vehicle
UHF	ultrahigh frequency
US	United States
USAF	United States Air Force
USMC	United States Marine Corps
UTM	universal transverse mercator

V

VFMED	variable format message entry device
VHF	**very high** frequency
VTDP	vector target designation point

W

WBK	wehrbereichkommando (German unit)
WHA	weapons holding area
WLR	weapons-locating radar
WOC	wing operations center
WP	white phosphorus

REFERENCES

REQUIRED PUBLICATIONS

Required publications are sources that users must read in order to understand or to comply with this publication.

Army Regulation (AR)

310-25	Dictionary of United States Army Terms (Short Title AD)

Field Manuals (FMs)

6-20	Fire Support in the AirLand Battle
100-5	Operations
100-10	Combat Service Support
l00-16	Support Operations Echelons Above Corps
100-20	Low Intensity Conflict
101-5-1	Operational Terms and Symbols

JOINT CHIEFS OF STAFF PUBLICATION (JCS PUB)

25	U.S. Message Text Formating Program

RELATED PUBLICATIONS

Related publications are sources of additional information. They are not required in order to understand this publication.

Department of the Army (DA) Forms

2028	Recommended Changes to Publications and Blank Forms
4655-R	Target List Worksheet (LRA)
4656-R	Scheduling Worksheet (LRA)

Department of Defense (DD) Form

1975	Joint Tactical Air Reconnaissance/Surveillance Request

Field Manuals (FMs)

1-103	Airspace Management and Army Air Traffic in a Combat Zone
(J)3-10-1	Chemical Weapons Employment
3-50	Deliberate Smoke Operations
3-100	NBC Operations
5-100	Engineer Combat, Operations
5-103	Survivability

5-106	Employment of Atomic Demolition Munitions (ADM Operations)
6-2	Field Artillery Survey
6-15	Field Artillery Meteorology
6-20-2 (HTF)	Division Artillery, Field Artillery Brigade, and Field Artillery Section (Corps) (How to Fight)
6-30	Observed Fire Procedures
6-121	Field Artillery Target Acquisition
6-122	Field Artillery Sound Ranging
6-141-2	(C) Field Artillery Target Analysis and Weapons Employment: Nonnuclear (U)
6-161	Field Artillery Radar Systems
9-6	Ammunition Service in the Theater of Operations
9-84	Special Ammunition (Nuclear) Direct and General Support Unit Operations
11-50	Combat Communications Within the Division (How to Fight)
17-95	Cavalry Operations
21-26	Map Reading and Land Navigation
34-1	Intelligence and Electronic Warfare Operations
34-40	(S) Electronic Warfare Operations (U)
34-81	Weather Support for Army Tactical Operations
44-1	US Army Air Defense Artillery Employment
90-2	Battlefield Deception
90-3 (HTF)	Desert Operations (How to Fight)
90-5 (HTF)	Jungle Operations (How to Fight)
90-6	Mountain Operations
90-10 (HTF)	Military Operations on Urbanized Terrain (MOUT) (How to Fight)
90-13 (HTF)	River Crossing Operations (How to Fight)
100-2-1	Soviet Army Operations and Tactics
100-26	The Air-Ground Operations System
100-42	US Air Force/US Army Airspace Management in an Area of Operations
100-50	Operations for Nuclear-Capable Units
101-5	Staff Organization and Operations
l0l-10-1/l	Staff Officers Field Manual– Organizational, Technical, and Logistical Data (Volume 1)
101-31-1	Staff Officers' Field Manual: Nuclear Weapons Employment Doctrine and Procedures
101-31-2	(SRD) Staff Officers' Field Manual: Nuclear Weapons Employment Effects Data (U)

Joint Munitions Effectiveness Manuals (JMEMs)

FM 101-50-1	Joint Munitions Effectiveness Manual/Air-to-Surface

FM 10l-60-l	(C) Joint Munitions Effectiveness Manual/Surface-to-Surface Effectiveness Data for Mortar, 81-mm: M29 (U)
FM 101-60-2	(C) Joint Munitions Effectiveness Manual/Surface-to-Surface: Effectiveness Data for Howitzer, 105-mm, M101A1 (U)
FM 101-60-3	(C) Joint Munitions Effectiveness Manual/Surface-to-Surface Effectiveness Data for Howitzer, 155-mm, M109 (U)
FM 101-60-6	(C) Joint Munitions Effectiveness Manual: Surface-to-Surface Effectiveness Data for 5-Inch/38-Inch Naval Twin-Gun Mount, MK-28, -32, and With Gun, Fire Control System MK-37 (U)
FM 101-60-7	(C) Joint Munitions Effectiveness Manual: Effectiveness Data for Mortar: 4.2-Inch, M30 (U)
FM 101-60-9	(C) Joint Munitions Effectiveness Manual: Surface-to-Surface Effectiveness Data for Naval Single-Gun Mount, MK42 w/Gun Fire Control System, MK68 (U)
FM 101-61-3	(C) Joint Munitions Effectiveness Manual/Surface-to-Surface (JMEM/SS) – Weapon/Munitions Application: Ammunition Reliability (U)
FM 101-62-1	(C) Joint Munitions Effectiveness Manual Surface-to-Surface: Safe Distances for Fragmentary Munitions (U)
FM 101-62-3	(C) Joint Munitions Effectiveness Manual/Surface-to-Surface Manual of Fragmentation Data (U)

Miscellaneous Literature

ATP-27	Offensive Air Support Operations
ATP-35(A)	Land Force Tactical Doctrine
JCS Pub 1	Department of Defense Dictionary of Military and Associated Terms
TACP 50-23/ TRADOC TT 100-44-1	Joint Suppression of Enemy Air Defenses (J-SEAD) Operations

NOTE: TACP 50-23/TRADOC TT100-44-1 can be obtained from HQ TAC, ATTN: XPJ-ALPO, Langley AFB, VA 23665.

TRADOC Pam 525-9	(S) J-SEAD (U)

NATO Standardization Agreements/Quadripartite Standardization Agreements (STANAGs/QSTAGs)

2014/506	Operation Orders, Annexes to Operation Orders, and Administrative and Logistics Orders
2031/515	Proforma for Artillery Fire Plan
2082	Relief of Combat Troops
2099/531	Fire Coordination in Support of Land Forces
2103/187	Reporting Nuclear Detonation, Biological and Chemical Attacks, and Predicting and Warning of Associated Hazards and Hazards Area (ATP-45)
2104/189	Friendly Nuclear Strike Warning to Armed Forces Operating on Land

2147/221	Target Numbering System (Nonnuclear)

NOTE: STANAGs and QSTAGs can be obtained from Naval Publications Center, 5801 Tabor Avenue, Philadelphia, PA 19120. DD Form 1425 may be used to requisition documents.

Training Circulars (TCs)

3-15	Nuclear Accident Incident Response and Assistance (NAIRA)
6-20-5	Field Artillery Delivered Scatterable Mines
6-40	Field Artillery Manual Cannon Gunnery
6-40A	Field Artillery Automated Cannon Gunnery
6-60	Multiple Launch Rocket System (MLRS) Operations
34-130	Intelligence Preparation of the Battlefield

Projected Publications

Projected publications are sources of additional information that are scheduled for printing but are not yet available. Upon print, they will be distributed automatically via pinpoint distribution. They may not be obtained from the USA AG Publications Center until indexed in DA Pamphlet 25-30.

FM 6-20-10	Tactics, Techniques, and Procedures for the Targeting Process
FM 6-20-40	Tactics, Techniques, and Procedures for Fire Support for Brigade Operations (Heavy)
FM 6-20-50	Tactics, Techniques, and Procedures for Fire Support for Brigade Operations (Light)
FM 71-100	Division Operations
FM 100-6	Large Unit Operations
FM 100-15	Corps Operations
FM 100-30	Nuclear Operations in Support of the AirLand Battle

INDEX

advance guard, 4-15
air defense, 1-7
Air Force, 3-1, B-37
airspace command and control, F-5
air support operations center, 1-3
air tasking order, 3-6
ANGLICO, 1-10, 1-11
Army air-ground system (AAGS), 1-15, 3-16, 3-21, B-38
Army aviation, 1-5, 4-23
artillery, see field artillery
attack, 2-4, 4-4

battlefield
  air interdiction, 3-2
  coordination element (BCE), 1-15
  structure (close, deep, rear), 4-2
breakout operations, 6-7

chemical weapons, 1-13
close air support, 3-2, 3-7, 4-22
close operations, 4-3, B-4 through B-12
command and control, 1-3, 1-6, 1-8, 1-12, 4-25, 6-2, B-13, B-28
communications, 1-10, 2-11, 3-7, 3-16 through 3-21, 4-10, 5-9, A-8, A-11, A-14, A-15
concept of operation, 2-12
control measures, 3-9, 6-4
control of CAS, 3-8
coordinating, 1-2, 2-2, 3-6, 3-13, 6-6, B-26, B-42, B-46
corps
  artillery, 1-2, 1-3
  commander, 1-2
  organization, A-2
  staff, 1-2, 2-8
counterfire, 4-4, 5-10, B-7, B-8, B-11, B-14 through B-35
course of action
  analysis (war gaming), 2-12, 2-15
  development, 2-8, 2-11, 2-12
covering
  fire, B-10
  force, 4-13
critical roles, A-15 through A-21

deception, 4-19
decision cycle, 2-3
deep operations, 4-3, 4-16 through 4-19, 5-4, B-1 through B-3
defensive
  fire support, 5-2, 5-3, 5-5, 5-7, 5-8, 5-10, B-7, B-10
  framework, 5-1
delay, 6-1, 6-2
divisions, 2-5, A-3 through A-6

electronic
  jamming, 1-8
  warfare, 1-7, 1-8, 3-12
encircled forces, 4-29, 6-6 through 6-8
engineer, 1-14, C-1
estimates, 2-9
exploitation, 4-27

family of scatterable mines (FASCAM), C-1, C-2
field artillery, 1-3, 4-21
fire support, 2-1, 4-20, 6-9, A-15
  cell, 1-2, A-6 through A-15
  coordinating measures, 4-23, Appendix F
  coordination, 1-2, 4-6, 4-7, 4-14, 4-15, 5-6, 6-2, 6-4, 6-7, B-13
  organizations, 1-2, A-6 through A-15
  plan, 2-13, 2-15, 6-2, B-9, Appendix D
flank security, 4-15

heavy-light mix, 6-9, 6-10

intelligence, 1-14
intelligence preparation of the battlefield, 4-9, 4-17
interdiction (fire), 4-5, B-6

joint fire support operations, 3-1, 3-3, 3-13, 3-15
joint suppression of enemy air defenses (J-SEAD), 3-15, B-36

laser-guided FA munition (Copperhead), C-2, C-3
liaison, 1-4, 1-5, 1-11, 1-15, 3-20, A-19
linkup operations, 6-8

main
  attack, 4-4
  battle area, 5-7 through 5-10
  command post, A-9, A-14, A-16, A-17
meteorology, 4-10
military intelligence, 3-20
mission analysis, 2-5

naval gunfire, 1-9, 3-13, 3-14, 4-22
nuclear
  planning, 1-12, 5-3, 5-4, 5-10, B-40 through B-48, D-23 through D-27
  weapons, 4-3, B-49, B-50
  weapons packages, B-41, B-45, B-48
nuclear/chemical, 1-12

obscurant smoke, C-3, C-4
observation, 4-24, B-12
offensive
  fire support, 4-1 through 4-3
  framework, 4-1
operations cell, rear command post, 1-15, 1-16
orders, 2-13, 2-15, Appendix D

passage of lines, 6-4 through 6-6
phases of offensive operations, 4-1
planning, 2-1, 2-7, 2-15, 3-4, 4-6, 4-7, 4-14, 4-15, 4-24, 6-9, B-4, B-9, B-40
plans, 2-13, B-2, B-6, B-9, B-12
preparation fire, B-9
pursuit, 4-28

QSTAGs,
  187, B-48, B-51
  189, B-48, B-51
  221, E-1
  506, D-1
  531, F-1, F-4

rear
  command post, 1-15, 1-16, A-11, A-15, A-17, A-18
  operations, 4-3, 4-19, 5-11, 5-12, B-12 through B-14
  operations commander, 4-21
  operations fire support, 4-20, 4-25, 5-11
  security, 5-11
  threat (level I, II, III), 4-20, 5-11
reconnaissance, 4-13
release of nuclear/chemical weapons, B-40
reserve operations, 4-11 through 4-13, 5-10, 5-11
retirement, 6-1, 6-4
retrograde operations, 6-1 through 6-4
river crossing, 6-8, 6-9

schedules, 2-14, B-10
security operations, 4-13 through 4-15, 5-4 through 5-7
STANAGs,
  2014, D-1
  2082, 6-1
  2099, F-1, F-4
  2103 (ATP 45), B-48, B-51
  2104, B-48, B-51
  2147, E-1
supporting attack, 4-4
suppression of enemy air defenses (SEAD), 4-4, 5-9, B-7, B-35 through B-40
survey, 4-10
sustainment, 5-2, 5-12
synchronizing operations, 4-2, 5-2

TACFIRE, D-28
tactical air
  control, 3-19
  control center, 3-16
  control party, 1-4
  reconnaissance, 3-11, 3-12
  support, 1-3, 3-4, 3-5
tactical command post, A-8, A-13, A-16
targets, B-10, Appendix E

target acquisition, 1-7, 5-2, 5-9, B-27
targeting (decide-detect-deliver), 4-8, 4-16 through 4-19, 5-4, 5-12, B-19 through B-26
Threat
  activities, 4-19, 4-20
  fire support, B-14, B-15
types of offensive operations, 4-1

war gaming, see course of action analysis,
withdrawal, 6-1, 6-3

18 OCTOBER 1989

By Order of the Secretary of the Army:

CARL E. VUONO
General, United States Army
Chief of Staff

Official:

WILLIAM J. MEEHAN II
Brigadier General, United States Army
The Adjutant General

DISTRIBUTION:

Active Army, USAR, and ARNG: To be distributed in accordance with DA Form 12-11E, Requirements for FM 6-20, Fire Support In the AirLand Battle (Qty rqr block no. 772).

☆ U.S. GOVERNMENT PRINTING OFFICE: 1994-300-421/82318