FM 5-499

HEADQUARTERS, DEPARTMENT OF THE ARMY

DISTRIBUTION RESTRICTION: ***Approved for public release; distribution is unlimited.***

FM 5-499

Field Manual
No. 5-499

Headquarters
Department of the Army
Washington, DC, 1 August 1997

Hydraulics

Table of Contents

Page

LIST OF FIGURES AND TABLES vii
Figures vii
Tables xiii

PREFACE xiv
CHAPTER 1. Hydraulic Basics 1-1
1-1. Pressure and Force. 1-1
Pressure 1-1
Force 1-3
1-2. Pascal's Law 1-4
1-3. Flow. 1-6
Velocity 1-6
Flow Rate 1-6
1-4. Energy, Work, and Power 1-6
Potential Energy 1-6
Kinetic Energy 1-6
Heat Energy and Friction 1-6
Relationship Between Velocity and Pressure. 1-7
Work 1-8
Power 1-8

CHAPTER 2. Hydraulic Systems. 2-1
2-1. Basic Systems 2-1
Hydraulic Jack 2-1
Motor-Reversing System 2-1
Open-Center System 2-2
Closed-Center System 2-5

DISTRIBUTION RESTRICTION: Approved for public release; distribution is unlimited.

Page
2-2. Color Coding 2-9
2-3. Reservoirs 2-9
Construction 2-9
Shape 2-10
Size 2-10
Location 2-10
Ventilation and Pressurization 2-11
Line Connections 2-11
Maintenance 2-11
2-4. Strainers and Filters 2-11
Strainers 2-12
Filters 2-12
2-5. Filtering Material and Elements 2-14
2-6. Accumulators 2-14
Spring-Loaded Accumulator 2-14
Bag-Type Accumulator 2-15
Piston-Type Accumulator 2-15
Maintenance 2-15
2-7. Pressure Gauges and Volume Meters 2-17
Pressure Gauges 2-17
Meters 2-17
2-8. Portable Hydraulic-Circuit Testers 2-18
Testers 2-18
Improper Operation 2-18
2-9. Circulatory Systems 2-18
Tubing 2-19
Piping 2-19
Flexible Hosing 2-19
Installation 2-21
2-10. Fittings and Connectors 2-21
Threaded Connectors 2-21
Flared Connectors 2-23
Flexible-Hose Couplings 2-25
Reusable Fittings 2-25
2-11. Leakage 2-29
Internal 2-29
External 2-30
Prevention 2-30
2-12. Seals 2-30
Static Seals 2-31
Dynamic Seals 2-31
Packing 2-33
Seal Materials 2-34

Page
CHAPTER 3. Pumps 3-1
3-1. Pump Classifications 3-1
Nonpositive-Displacement Pumps 3-1
Positive-Displacement Pumps 3-1
Characteristics 3-2
3-2. Performance 3-2
3-3. Displacement 3-2
Fixed-Displacement Pump 3-3
Variable-Displacement Pump 3-3
3-4. Slippage 3-3
3-5. Designs 3-3
Centrifugal Pump 3-3
Rotary Pump 3-4
Reciprocating Pump 3-4
3-6. Gear Pumps 3-4
External 3-4
Internal 3-5
Lobe Pump 3-6
3-7. Vane Pumps 3-6
Characteristics 3-6
Unbalanced Vane Pumps 3-6
Balanced Vane Pumps 3-7
Double Pumps 3-7
Two-Stage Pumps 3-9
3-8. Piston Pumps 3-10
Radial 3-10
Axial Piston Pumps 3-11
3-9. Pump Operation 3-14
Overloading 3-14
Excess Speed 3-14
Cavitation 3-14
Operating Problems 3-15

CHAPTER 4. Hydraulic Actuators 4-1
4-1. Cylinders 4-1
Single-Acting Cylinder 4-1
Double-Acting Cylinder 4-1
Differential Cylinder 4-1
Nondifferential Cylinder 4-2
Ram-Type Cylinder 4-2
Piston-Type Cylinder 4-3
Cushioned Cylinder 4-4
Lockout Cylinders 4-4
4.2 Construction and Application 4-4

Page
4-3. Maintenance 4-5
External Leakage 4-5
Internal Leakage 4-5
Creeping Cylinder 4-5
Sluggish Operation 4-5
Loose Mounting 4-5
Misalignment 4-5
Lack of Lubrication 4-7
Abrasives on a Piston Rod 4-7
Burrs on a Piston Rod 4-7
Air Vents 4-7
4-4. Hydraulic Motors 4-7
Gear-Type Motors 4-8
Vane-Type Motors 4-8
Piston-Type Motors 4-10

CHAPTER 5. Valves 5-1
5-1. Pressure-Control Valves 5-1
Relief Valves 5-2
Pressure-Reducing Valves 5-3
Sequence Valves 5-5
Counterbalance Valves 5-7
Pressure Switches 5-8
5-2. Directional-Control Valves 5-8
Poppet Valve 5-9
Sliding-Spool Valve 5-10
Check Valves 5-10
Two-Way Valve 5-14
Four-Way Valves 5-14
5-3. Flow-Control Valves 5-19
Gate Valve 5-19
Globe Valve 5-21
Needle Valve 5-22
Restrictor 5-22
Orifice Check Valve 5-23
Flow Equalizer 5-23
5-4. Valve Installation 5-25
Meter-In Circuit 5-25
Meter-Out Circuit 5-25
Bleed-Off Circuit 5-26
Compensated Flow 5-26
5-5. Valve Failures and Remedies 5-26
Servicing Valves 5-27
Disassembling Valves 5-27
Repairing Valves 5-28

Page
5-6. Valve Assembly 5-29
5-7. Troubleshooting Valves 5-30
Pressure-Control Valves 5-30
Directional-Control Valves 5-32
Volume-Control Valves 5-33

CHAPTER 6. Circuit Diagrams and Troubleshooting 6-1
6-1. Hydraulic-Circuit Diagrams 6-1
6-2. United States of American Standards Institute (USASI) Graphical Symbols 6-1
Reservoir 6-4
Lines 6-4
Pump 6-4
Motor 6-5
Cylinder 6-5
Pressure-Control Valves 6-5
Flow-Control Valves 6-7
Directional-Control Valves 6-7
Accessories 6-9
6-3. Typical Mobile Circuits 6-11
Hydraulic-Lift Circuit 6-11
Power-Steering Circuits 6-12
Road-Patrol-Truck Circuits 6-12
6-4. Troubleshooting 6-13
Causes of Improper Operations 6-13
Testing a Hydraulic Circuit 6-13
Comparing Test Results with Specifications 6-13
Slippage 6-15
Flow and Pressure 6-15
Other Conditions 6-15
Specific Troubles, Causes, and Solutions 6-16

CHAPTER 7. Electrical Devices: Troubleshooting and Safety 7-1
7-1. Hydraulics and Electricity 7-1
7-2. Troubleshooting Electrical Devices 7-1
Procedure 7-5
Testing Devices 7-6
7-3. Ground 7-8
Earth Ground 7-8
Chassis or Common Ground 7-9
Zero Reference Point 7-9
Isolation Between Earth and Chassis Ground 7-10
7-4. Safety 7-10
Information 7-10
Practices 7-11

Page
APPENDIX A. Metric Conversion Chart Appendix-1

GLOSSARY Glossary-1

REFERENCES References-1

INDEX Index-1

List of Figures and Tables

Figures

Page

Figure 1-1. *Basic hydraulic device* 1-1
Figure 1-2. *Compressibility* 1-2
Figure 1-3. *Water column* 1-3
Figure 1-4. *Pump pressure* 1-4
Figure 1-5. *Interaction of hydraulic and atmospheric pressures* 1-4
Figure 1-6. *Force, pressure, and area* 1-5
Figure 1-7. *Pascal's Law apparatus* 1-5
Figure 1-8. *Laminar and turbulent flow* 1-7
Figure 1-9. *Effect of friction on pressure* 1-7
Figure 1-10. *Bernouilli's Principle* 1-8
Figure 1-11. *Combined effects of friction and velocity changes* 1-9

Figure 2-1. *Hydraulic jack* 2-2
Figure 2-2. *Motor-reversing system* 2-3
Figure 2-3. *Open-center system* 2-4
Figure 2-4. *Open-center system with a series connection* 2-4
Figure 2-5. *Open-center system with a series/parallel connection* 2-5
Figure 2-6. *Open-center system with a flow divider* 2-6
Figure 2-7. *Closed-center system* 2-6
Figure 2-8. *Fixed-displacement pump and accumulator* 2-7
Figure 2-9. *Variable-displacement pump* 2-8
Figure 2-10. *Closed-center system with charging pump* 2-8
Figure 2-11. *Design features of a reservoir* 2-10
Figure 2-12. *Hydraulic-system stainers* 2-12
Figure 2-13. *Full-flow hydraulic filter* 2-13

Page

Figure 2-14. *Proportional-flow filter* 2-13
Figure 2-15. *Spring-loaded accumulator* 2-15
Figure 2-16. *Bag-type accumulator* 2-16
Figure 2-17. *Piston-type accumulator* 2-16
Figure 2-18. *Pressure gauge* 2-17
Figure 2-19. *Nutating-piston-disc flowmeter* 2-17
Figure 2-20. *Portable hydraulic-circuit tester* 2-18
Figure 2-21. *Method of installing tubing* 2-19
Figure 2-22. *Flexible rubber hose* 2-20
Figure 2-23. *Installing flexible hose* 2-20
Figure 2-24. *Threaded-pipe connectors* 2-22
Figure 2-25. *Flared-tube connector* 2-23
Figure 2-26. *Flared-tube fittings* 2-24
Figure 2-27. *Field-attachable couplings* 2-25
Figure 2-28. *Hose-length measurement* 2-25
Figure 2-29. *Hose cutting* 2-25
Figure 2-30. *Permanently attached couplings* 2-26
Figure 2-31. *Skived fitting* 2-26
Figure 2-32. *Trimming a hose* 2-27
Figure 2-33. *Female portion of a fitting* 2-27
Figure 2-34. *Male and female portions of a fitting* 2-28
Figure 2-35. *Tightening a fitting* 2-28
Figure 2-36. *Nonskived fitting* 2-28
Figure 2-37. *Fittings* 2-28
Figure 2-38. *Assembly of clamp-type coupling* 2-29
Figure 2-39. *Static seals* 2-31
Figure 2-40. *O-ring placement* 2-31
Figure 2-41. *O-ring removal tool* 2-32
Figure 2-42. *Backup ring* 2-32
Figure 2-43. *T-ring seal* 2-33
Figure 2-44. *Lip seal* 2-33

Page

Figure 2-45. *Cup seal* 2-33
Figure 2-46. *Piston ring* 2-33
Figure 2-47. *Face seal* 2-34
Figure 2-48. *Compression packing* 2-34

Figure 3-1. *Nonpositive-displacement pump* 3-1
Figure 3-2. *Reciprocating-type, positive-displacement pump* 3-2
Figure 3-3. *Positive-displacement pump* 3-2
Figure 3-4. *Volute pump* 3-4
Figure 3-5. *Diffuser pump* 3-4
Figure 3-6. *External gear pump* 3-5
Figure 3-7. *Internal gear pump* 3-5
Figure 3-8. *Lobe pump* 3-6
Figure 3-9. *Unbalanced vane pump* 3-7
Figure 3-10. *Balanced vane pump* 3-7
Figure 3-11. *Vane-type double pump* 3-8
Figure 3-12. *Fluid flow from vane-type double pumps* 3-8
Figure 3-13. *Vane-type, two-stage pump* 3-9
Figure 3-14. *Simplified radial piston pump* 3-10
Figure 3-15. *Nine-piston radial piston pump* 3-11
Figure 3-16. *Pintle for a radial piston pump* 3-11
Figure 3-17. *Cylinder block for a radial piston pump* 3-12
Figure 3-18. *Pistons for a radial piston pump* 3-12
Figure 3-19. *In-line piston pump* 3-13
Figure 3-20. *Bent-axial piston pump* 3-14

Figure 4-1. *Single-acting cylinder* 4-1
Figure 4-2. *Double-acting cylinder* 4-2
Figure 4-3. *Nondifferential cylinder* 4-2
Figure 4-4. *Telescoping, ram-type, actuating cylinder* 4-3
Figure 4-5. *Single-acting, spring-loaded, piston-type cylinder* 4-3

Page

Figure 4-6. *Double-acting, piston-type cylinder* 4-4
Figure 4-7. *Cushioned, actuating cylinder* 4-4
Figure 4-8. *Applications of cylinders* 4-6
Figure 4-9. *Basic operations of a hydraulic motor* 4-7
Figure 4-10. *Gear-type motor* 4-8
Figure 4-11. *Vane-type motor* 4-8
Figure 4-12. *Pressure differential on a vane-type motor* 4-9
Figure 4-13. *Flow condition in a vane-type pump* 4-9
Figure 4-14. *Rocker arms pushing vanes in a pump* 4-10
Figure 4-15. *In-line-axis, piston-type motor* 4-10
Figure 4-16. *Swash plate* 4-11
Figure 4-17. *Bent-axis, piston-type motor* 4-11

Figure 5-1. *Valves* 5-1
Figure 5-2. *Simple relief valve* 5-2
Figure 5-3. *Compound relief valve* 5-3
Figure 5-4. *Pressure-reducing valve* 5-3
Figure 5-5. *X-series, pressure-reducing valve* 5-4
Figure 5-6. *Internal construction of an XC-series valve* 5-5
Figure 5-7. *Sequence valve* 5-6
Figure 5-8. *Application of sequence valve* 5-6
Figure 5-9. *Counterbalance valve* 5-7
Figure 5-10. *Pressure switch* 5-8
Figure 5-11. *Spool valve* 5-9
Figure 5-12. *Operation of a simple poppet valve* 5-10
Figure 5-13. *Operation of sliding-spool, directional-control valve* 5-10
Figure 5-14. *Swing-type check valve* 5-11
Figure 5-15. *Vertical check valve* 5-11
Figure 5-16. *Spring-loaded check valve* 5-11
Figure 5-17. *Standard check valve* 5-12
Figure 5-18. *Restriction check valve* 5-12

Page

Figure 5-19. *Pilot-operated check valve* 5-13
Figure 5-20. *Pilot-operated check valve, second type* 5-13
Figure 5-21. *Two-way valve* 5-14
Figure 5-22. *Flow conditions in a circuit* 5-15
Figure 5-23. *Working view of poppet-type, four-way valve* 5-16
Figure 5-24. *Schematic of a four-way, directional-control, sliding-spool valve* . . . 5-17
Figure 5-25. *Closed-center spool valve* 5-18
Figure 5-26. *Open-center spool valve* 5-18
Figure 5-27. *Shifting spool by hand lever* 5-20
Figure 5-28. *Spool shifted by pilot pressure* 5-21
Figure 5-29. *Solenoid-operated, sliding-spool, directional-control valve* 5-21
Figure 5-30. *Cross section of a gate valve* 5-22
Figure 5-31. *Operation of a globe valve* 5-22
Figure 5-32. *Sectional view of a needle valve* 5-22
Figure 5-33. *Fixed restrictor* 5-23
Figure 5-34. *Variable restrictor* 5-23
Figure 5-35. *Orifice check valve* 5-23
Figure 5-36. *Flow equalizer* 5-24
Figure 5-37. *Typical meter-in circuit* 5-25
Figure 5-38. *Typical meter-out circuit* 5-26
Figure 5-39. *Spring tester* 5-28
Figure 5-40. *Valve inspection* 5-29
Figure 5-41. *Volume-control valve* 5-29
Figure 5-42. *Pressure-control valve* 5-29
Figure 5-43. *Cartridge-type relief valve* 5-30
Figure 5-44. *Readings on a cartridge-type relief valve* 5-30

Figure 6-1. *Graphical-circuit diagram* 6-1
Figure 6-2. *USASI graphical symbols* 6-2
Figure 6-3. *Reservoir symbols* 6-4
Figure 6-4. *Hydraulic line symbols* 6-4

Page

Figure 6-5. *Crossing lines A and B* 6-5
Figure 6-6. *Pump symbols* 6-5
Figure 6-7. *Motor symbols* 6-6
Figure 6-8. *Cylinder symbols* 6-6
Figure 6-9. *Pressure-control-valve symbols* 6-6
Figure 6-10. *Relief-valve symbol* 6-7
Figure 6-11. *Sequence-valve symbol* 6-7
Figure 6-12. *Check-valve symbol* 6-8
Figure 6-13. *Counterbalance-valve symbol* 6-8
Figure 6-14. *Pressure-reducing-valve symbol* 6-9
Figure 6-15. *Flow-control-valve symbol* 6-9
Figure 6-16. *Unloading-valve symbol* 6-9
Figure 6-17. *Four-way, directional-control-valve symbol* 6-10
Figure 6-18. *Mobile directional-control-valve symbol* 6-10
Figure 6-19. *Fluid-conditioner symbols* 6-11
Figure 6-20. *Accumulator symbol* 6-11
Figure 6-21. *Hydraulic-lift circuit in neutral* 6-11
Figure 6-22. *Manual-steering-gear layout* 6-12
Figure 6-23. *Power-steering layout* 6-12
Figure 6-24. *Semi-integral power-steering system* 6-13
Figure 6-25. *Hydraulic circuit diagram for a road-patrol truck* 6-14
Figure 6-26. *Hydraulic tester connected to a pump's output* 6-15

Figure 7-1. *Common electrical schematic symbols* 7-2
Figure 7-2. *Comparison of electrical and hydraulic components* 7-3
Figure 7-3. *Comparison of electrical and hydraulic circuits* 7-4
Figure 7-4. *Schematic diagrams illustrating zero reference point* 7-9
Figure 7-5. *Battery installed between earth ground and chassis ground* 7-11

Tables

Page

Table 2-1. *Figure colors* 2-9
Table 5-1. *Classifications of directional-control valves* 5-16
Table 6-1. *Problems and solutions with pump operations* 6-17
Table 6-2. *Problems and solutions with actuating mechanism* 6-19
Table 6-3. *Problems and solutions with heating oil* 6-20
Table 6-4. *Problems and solutions with fluid motors* 6-21
Table 6-5. *Problems and solutions with accumulator operation* 6-21
Table A-1. *Metric conversion chart* Appendix-1

Preface

This field manual (FM) serves as a guide for personnel who operate and maintain military equipment using hydraulic-powered control systems. It includes general information covering basic hydraulics and describes the properties and characteristics of fluids and several types of pumps, motors, valves, and controls. This manual also deals with piping, tubing, and hoses used to convey fluid under pressure. It describes the functions and types of reservoirs, strainers, filters, and accumulators. It discusses the purposes and types of seals and packings used in fluid power systems.

The contents of this manual are applicable to both nuclear and nonnuclear warfare.

The Appendix contains an English to metric measurement conversion chart.

ACKNOWLEDGEMENTS

Acknowledgment is gratefully made to the organizations listed below for permitting the use of copyrighted material in preparing this manual.

Deere & Company
Moline, Illinois
Hydraulics. "Reproduced by permission of Deere & Company. c 1997. Deere & Company. All rights reserved."

Vickers, Inc.
Rochester Hills, Michigan
Industrial Hydraulics Manual, Third Edition 1993.

The proponent for this publication is Headquarters (HQ), United States Army Training and Doctrine Command (TRADOC). Submit changes for improving this publication on Department of the Army (DA) Form 2028 (Recommended Changes to Publications and Blank Forms) and forward it to Commandant, USAES, ATTN: ATSE-TD-D-P, Fort Leonard Wood, MO 65473-6650.

Unless otherwise stated, masculine nouns and pronouns do not refer exclusively to men.

CHAPTER 1

Hydraulic Basics

Hydraulics is the science of transmitting force and/or motion through the medium of a confined liquid. In a hydraulic device, power is transmitted by pushing on a confined liquid. Figure 1-1 shows a simple hydraulic device. The transfer of energy takes place because a quantity of liquid is subject to pressure. To operate liquid-powered systems, the operator should have a knowledge of the basic nature of liquids. This chapter covers the properties of liquids and how they act under different conditions.

1-1. Pressure and Force. Pressure is force exerted against a specific area (force per unit area) expressed in pounds per square inch (psi). Pressure can cause an expansion, or resistance to compression, of a fluid that is being squeezed. A fluid is any liquid or gas (vapor). Force is anything that tends to produce or modify (push or pull) motion and is expressed in pounds.

a. *Pressure*. An example of pressure is the air (gas) that fills an automobile tire. As a tire is inflated, more air is squeezed into it than it can hold. The air inside a tire resists the squeezing by pushing outward on the casing of the tire. The outward push of the air is pressure. Equal pressure throughout a confined area is a characteristic of any pressurized fluid. For example, in an inflated tire, the outward push of the air is uniform throughout. If it were not, a tire would be pushed into odd shapes because of its elasticity.

There is a major difference between a gas and a liquid. Liquids are slightly compressible (Figure 1-2, page 1-2). When a confined liquid is pushed on, pressure builds up. The pressure is still transmitted equally throughout the container. The fluid's behavior makes it possible to transmit a push through pipes, around corners, and up and down. A hydraulic system uses a liquid

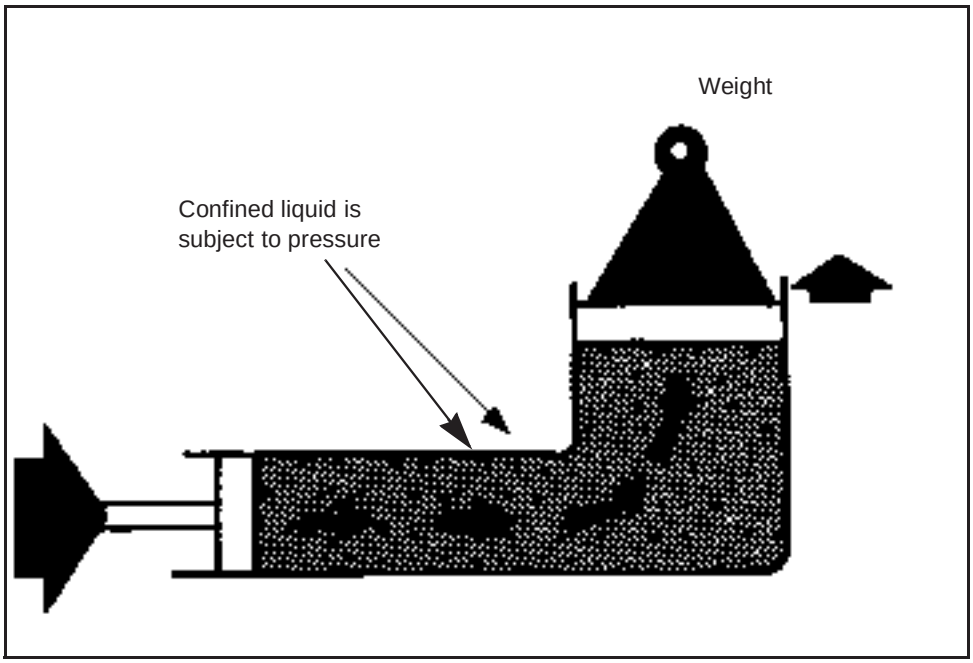

Figure 1-1. Basic hydraulic device

because its near incompressibility makes the action instantaneous as long as the system is full of liquid.

Pressure can be created by squeezing or pushing on a confined fluid only if there is a resistance to flow. The two ways to push on a fluid are by the action of a mechanical pump or by the weight of the fluid. An example of pressure due to a fluid's weight would be in an ocean's depths. The water's weight creates the pressure, which increases or decreases, depending on the depth.

By knowing the weight of a cubic foot of water, you can calculate the pressure at any depth. Figure 1-3 shows a column of water 1 foot square and 10 feet high, which equates to 10 cubic feet. (One cubic foot of water weighs 52.4 pounds.) The total weight of water in this column is 624 pounds. The weight at the bottom covers 1,445 square inches (1 square foot). Each square inch of the bottom is subject to 1/144 of the total weight, or 4.33 pounds. Thus, the pressure at this depth is 4.33 psi. You can also create an equal pressure of 4.33 psi in a liquid using the pump and figures shown in Figure 1-4, page 1-4.

Before pressure, head was the only way to express pressure measurement. It was expressed as feet of water. Today, head is still the vertical distance between two levels in a fluid. In Figure 1-3, the head between the top and bottom of the water is 10 feet, which is equivalent to 4.33 psi. Therefore, each foot of water is equal to 0.433 psi.

The earth has an atmosphere of air extending 50 miles up, and this air has weight. This air creates a head of pressure that is called atmospheric pressure. A column of air 1 square inch in cross section and the height of the atmosphere would weigh 14.7 pounds at sea level. Thus, the earth's atmospheric pressure is 14.7 psi at sea level. The role of atmospheric pressure in

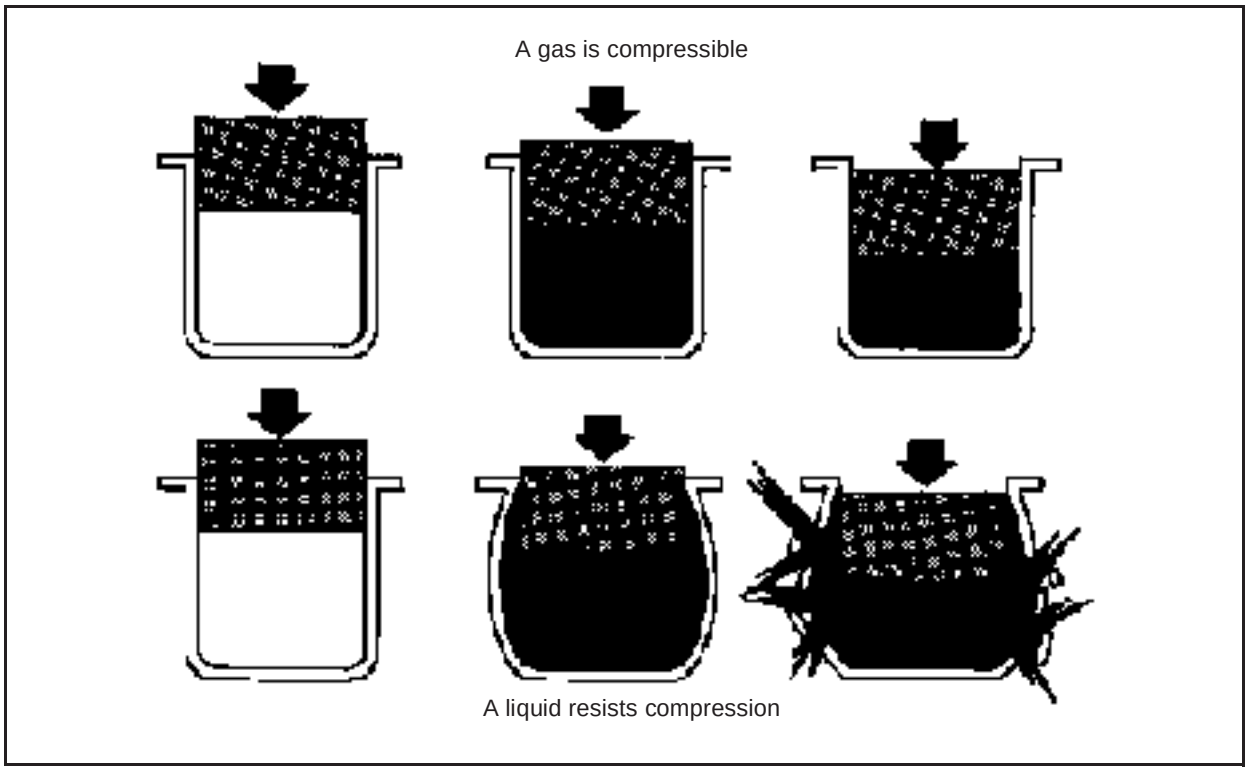

Figure 1-2. Compressibility

most hydraulic systems is significant. Figure 1-5, page 1-4, shows the interaction of hydraulic and atmospheric pressures under the three sets of conditions listed below:

(1) Diagram A. In the diagram, the tube is open at both ends. When it is placed in a liquid, the liquid will rise, inside and outside, in proportion to the amount of liquid displaced by the submerged tube wall.

(2) Diagram B. In the diagram, ends of the tube are closed. When placed in a liquid, the liquid level in the tube is forced down because the air in the tube must occupy a space. Therefore, the liquid is displaced. The liquid level outside the tube rises in proportion to the volume of the cylinder wall and the volume of the trapped air below the original liquid level. The atmospheric pressure (14.7 psi) on the liquid outside the tube is not heavy enough to force the liquid inside the tube upward against the pressure of the trapped air, which is more than 14.7 psi.

(3) Diagram C. In the diagram, the upper end of the tube is closed, but some of the air has been removed from this tube so that the pressure within the tube is less than 14.7 psi (a partial vacuum). A perfect vacuum would exist if all pressure within the tube could be eliminated, a condition that never happens. Because the liquid outside the tube is subject to full atmospheric pressure, the liquid is forced up into the tube to satisfy the vacuum. How far the liquid rises depends on the difference in air pressure between the trapped air and the atmosphere.

b. *Force.* The relationship of force, pressure, and area is as follows:

$$F = PA$$

where—

F = force, in pounds
P = pressure, in psi
A = area, in square inches

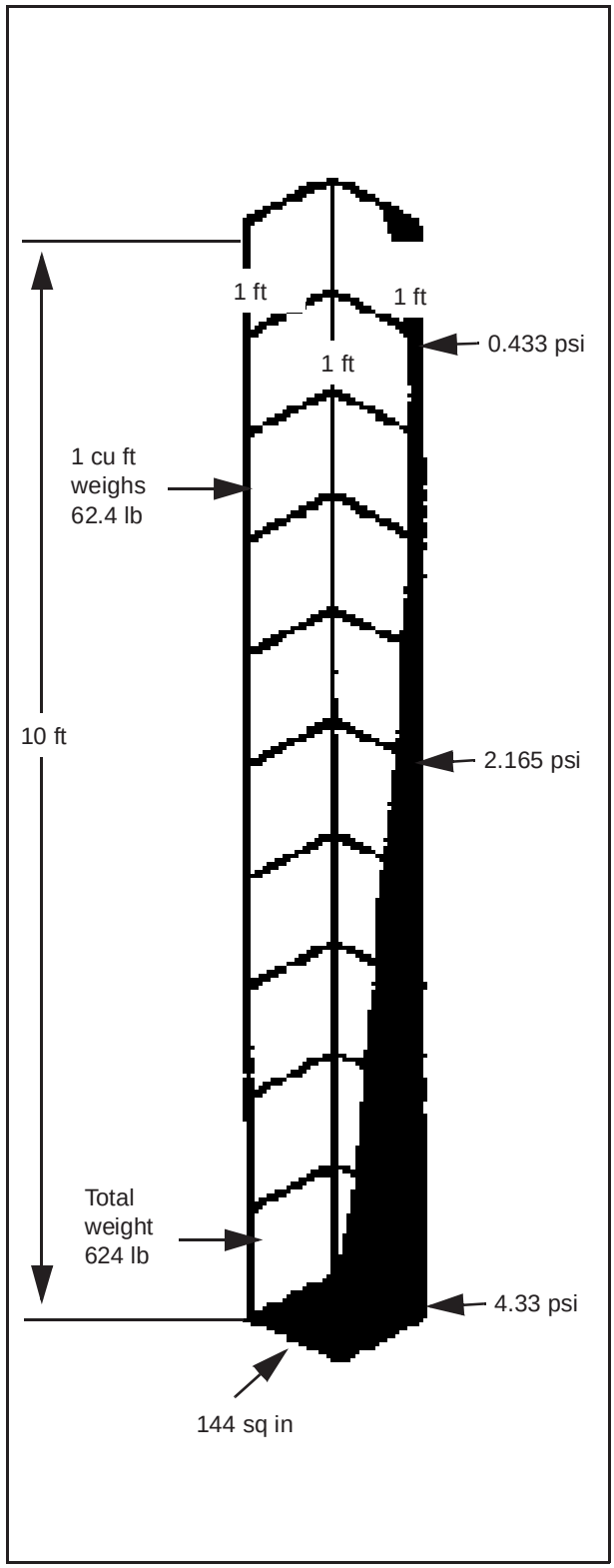

Figure 1-3. Water column

Example:

Figure 1-6 shows a pressure of 50 psi being applied to an area of 100 square inches. The total force on the area is—

F = PA
F = 50 x 100 = 5,000 pounds

1-2. Pascal's Law. Blaise Pascal formulated the basic law of hydraulics in the mid 17th century. He discovered that pressure exerted on a fluid acts equally in all directions. His law states that pressure in a confined fluid is transmitted undiminished in every direction and acts with equal force on equal areas and at right angles to a container's walls.

Figure 1-7 shows the apparatus that Pascal used to develop his law. It consisted of two connected cylinders of different diameters with a liquid trapped between them. Pascal found that the weight of a small piston will balance the weight of a larger piston as long as the piston's areas are in proportion to the weights. In the small cylinder, a force of 100 pounds on a 1-square-inch piston creates a pressure of 100 psi. According to Pascal's Law, this pressure is transmitted undiminished in every direction. In the larger

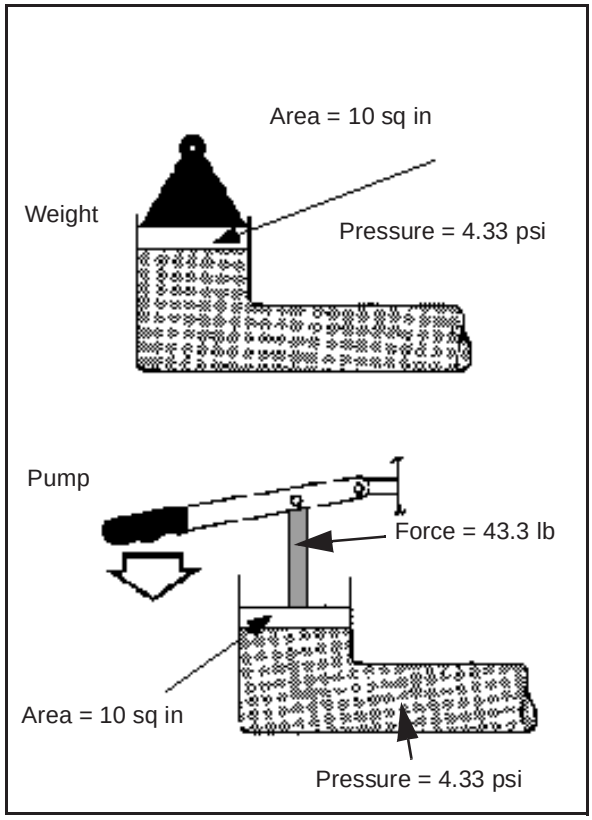

Figure 1-4. Pump pressure

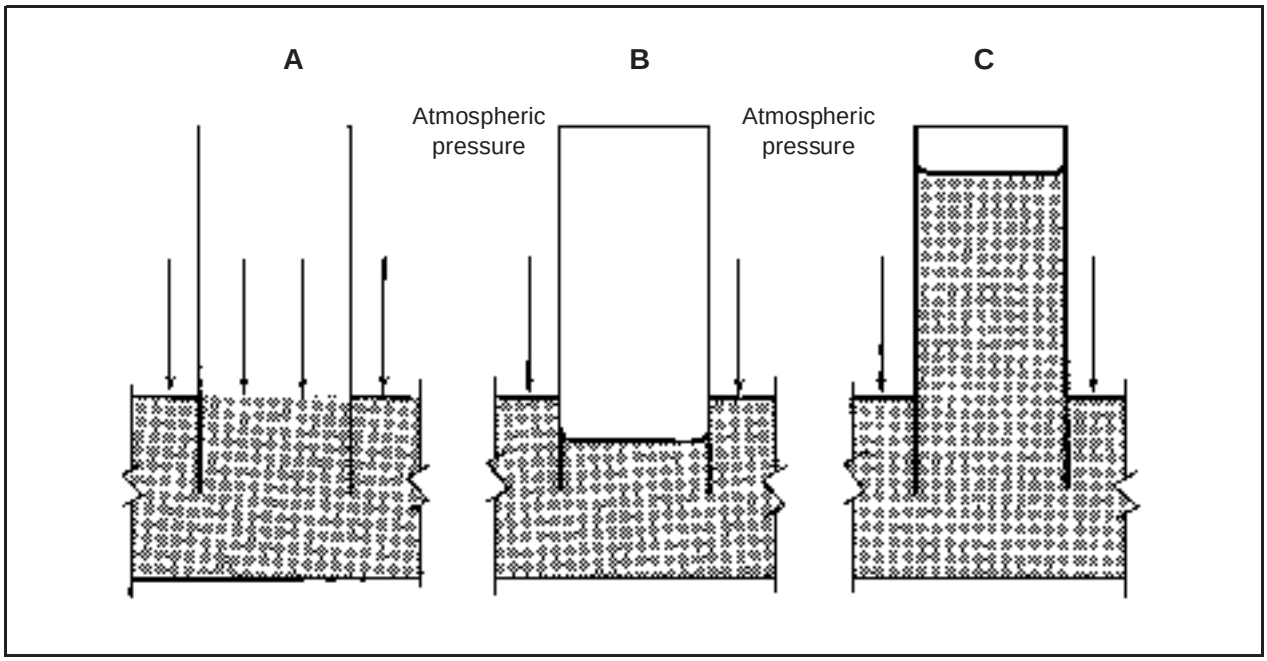

Figure 1-5. Interaction of hydraulic and atmospheric pressures

cylinder, the 100 psi of pressure from the small cylinder is transmitted to an area of 5 square inches, which results in a force of 500 pounds on the second piston. The force has been multiplied 5 times—a mechanical advantage of 5 to 1. Using the same factors, you can determine the distance the pistons move. For example, if the small piston moves down 10 inches, the larger piston will move up 2 inches. Use the following to determine the distance:

$$D_2 = \frac{F_1 \times D_1}{F_2}$$

where—

F_1 = *force of the small piston, in pounds*
D_1 = *distance the small piston moves, in inches*
D_2 = *distance the larger piston moves, in inches*
F_2 = *force of the larger piston, in pounds*

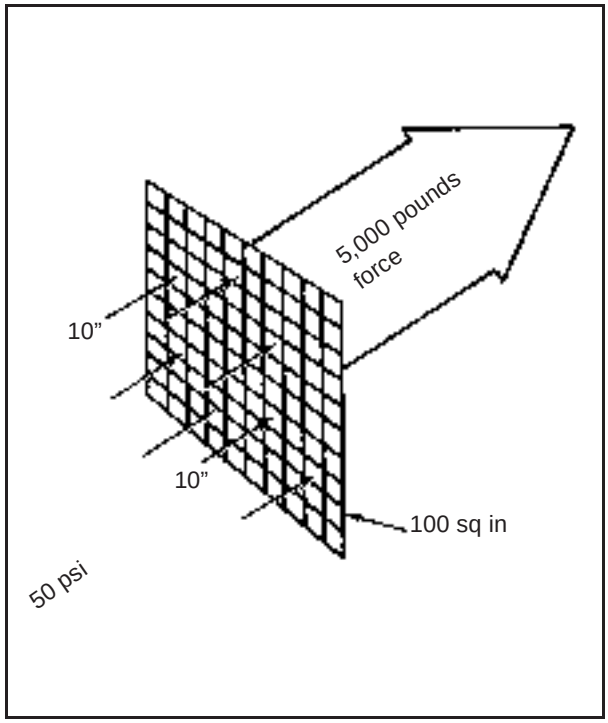

Figure 1-6. Force, pressure, and area

Example: Determine D_2

$$D_2 = \frac{F_1 \times D_1}{F_2} \qquad D_2 = \frac{100 \times 10}{500} \qquad D_2 = 2 \text{ in}$$

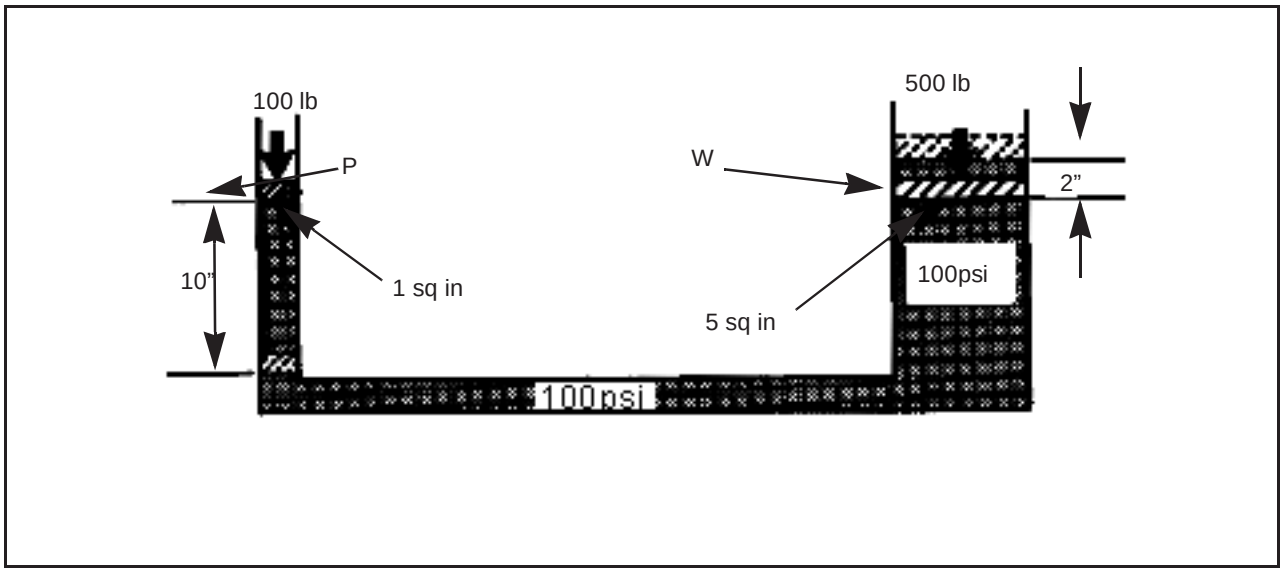

Figure 1-7. Pascal’s Law apparatus

1-3. Flow. Flow is the movement of a hydraulic fluid caused by a difference in the pressure at two points. In a hydraulic system, flow is usually produced by the action of a hydraulic pump—a device used to continuously push on a hydraulic fluid. The two ways of measuring flow are velocity and flow rate.

a. *Velocity*. Velocity is the average speed at which a fluid's particles move past a given point, measured in feet per second (fps). Velocity is an important consideration in sizing the hydraulic lines that carry a fluid between the components.

b. *Flow Rate*. Flow rate is the measure of how much volume of a liquid passes a point in a given time, measured in gallons per minute (GPM). Flow rate determines the speed at which a load moves and, therefore, is important when considering power.

1-4. Energy, Work, and Power. Energy is the ability to do work and is expressed in foot-pound (ft lb). The three forms of energy are potential, kinetic, and heat. Work measures accomplishments; it requires motion to make a force do work. Power is the rate of doing work or the rate of energy transfer.

a. *Potential Energy*. Potential energy is energy due to position. An object has potential energy in proportion to its vertical distance above the earth's surface. For example, water held back by a dam represents potential energy because until it is released, the water does not work. In hydraulics, potential energy is a static factor. When force is applied to a confined liquid, as shown in Figure 1-4 (page 1-4), potential energy is present because of the static pressure of the liquid. Potential energy of a moving liquid can be reduced by the heat energy released. Potential energy can also be reduced in a moving liquid when it transforms into kinetic energy. A moving liquid can, therefore, perform work as a result of its static pressure and its momentum.

b. *Kinetic Energy*. Kinetic energy is the energy a body possesses because of its motion. The greater the speed, the greater the kinetic energy. When water is released from a dam, it rushes out at a high velocity jet, representing energy of motion—kinetic energy. The amount of kinetic energy in a moving liquid is directly proportional to the square of its velocity. Pressure caused by kinetic energy may be called velocity pressure.

c. *Heat Energy and Friction*. Heat energy is the energy a body possesses because of its heat. Kinetic energy and heat energy are dynamic factors. Pascal's Law dealt with static pressure and did not include the friction factor. Friction is the resistance to relative motion between two bodies. When liquid flows in a hydraulic circuit, friction produces heat. This causes some of the kinetic energy to be lost in the form of heat energy.

Although friction cannot be eliminated entirely, it can be controlled to some extent. The three main causes of excessive friction in hydraulic systems are—

- Extremely long lines.
- Numerous bends and fittings or improper bends.
- Excessive velocity from using undersized lines.

In a liquid flowing through straight piping at a low speed, the particles of the liquid move in straight lines parallel to the flow direction. Heat loss from friction is minimal. This kind of flow is called laminar flow. Figure 1-8, diagram A, shows laminar flow. If the speed

increases beyond a given point, turbulent flow develops. Figure 1-8, diagram B, shows turbulent flow.

Figure 1-9 shows the difference in head because of pressure drop due to friction. Point B shows no flow resistance (free-flow condition); the pressure at point B is zero. The pressure at point C is at its maximum because of the head at point A. As the liquid flows from point C to point B, friction causes a pressure drop from maximum pressure to zero pressure. This is reflected in a succeedingly decreased head at points D, E, and F.

d. *Relationship Between Velocity and Pressure.* Figure 1-10, page 1-8, explains Bernouilli's Principle, which states that the

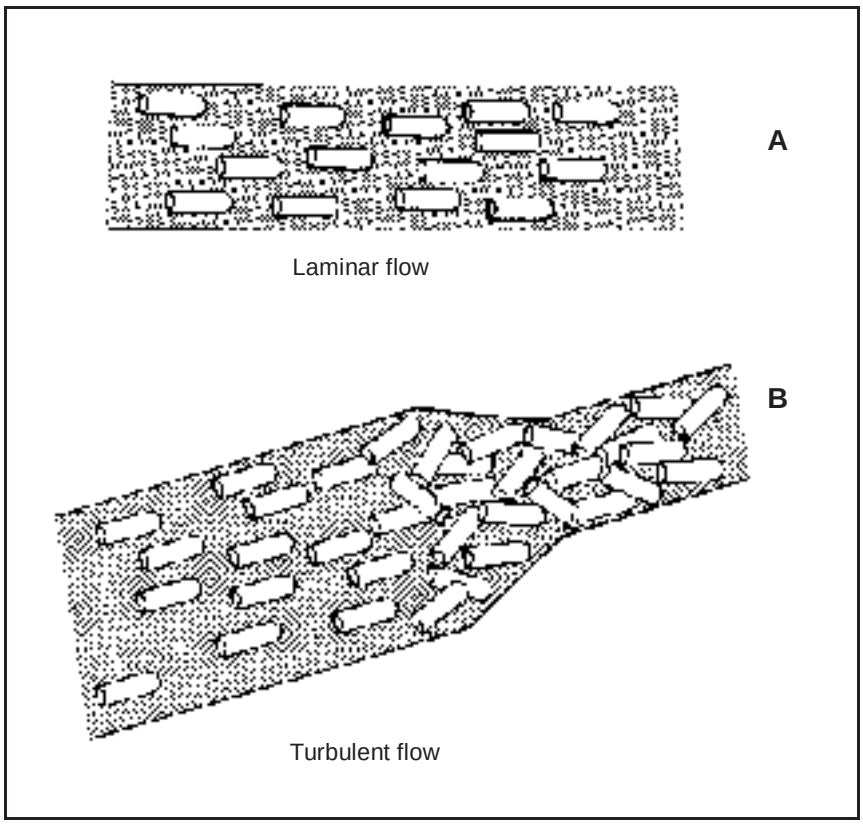

Figure 1-8. Laminar and turbulent flow

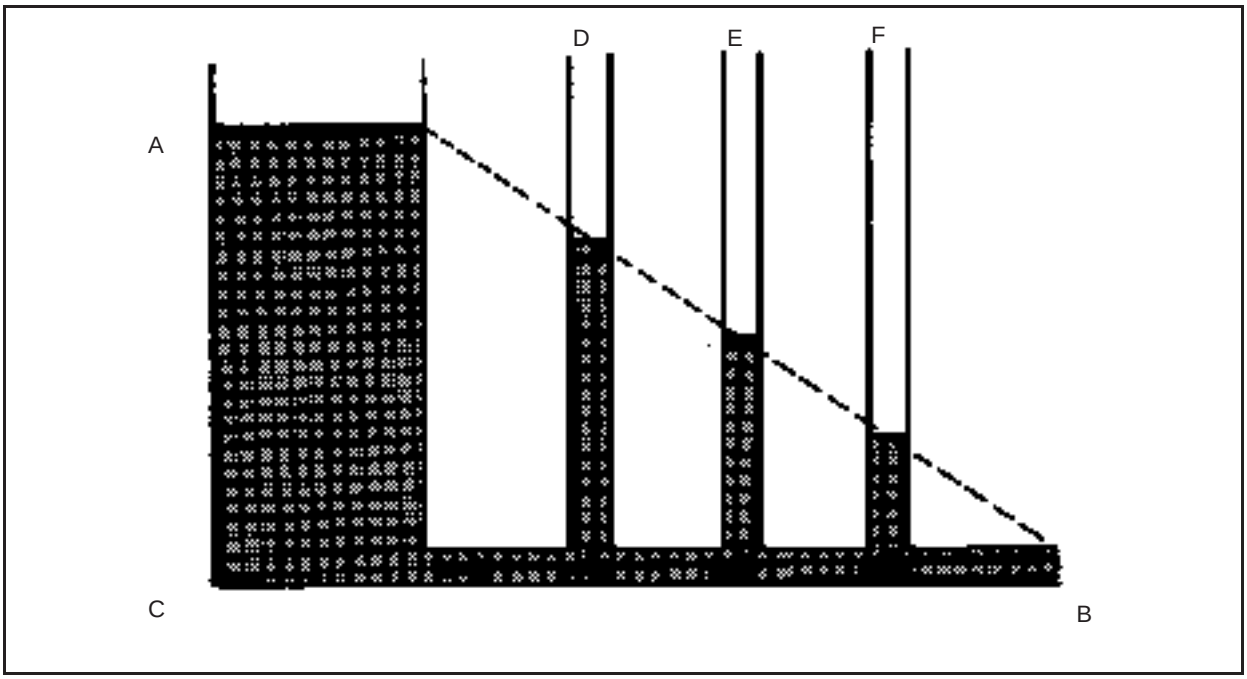

Figure 1-9. Effect of friction on pressure

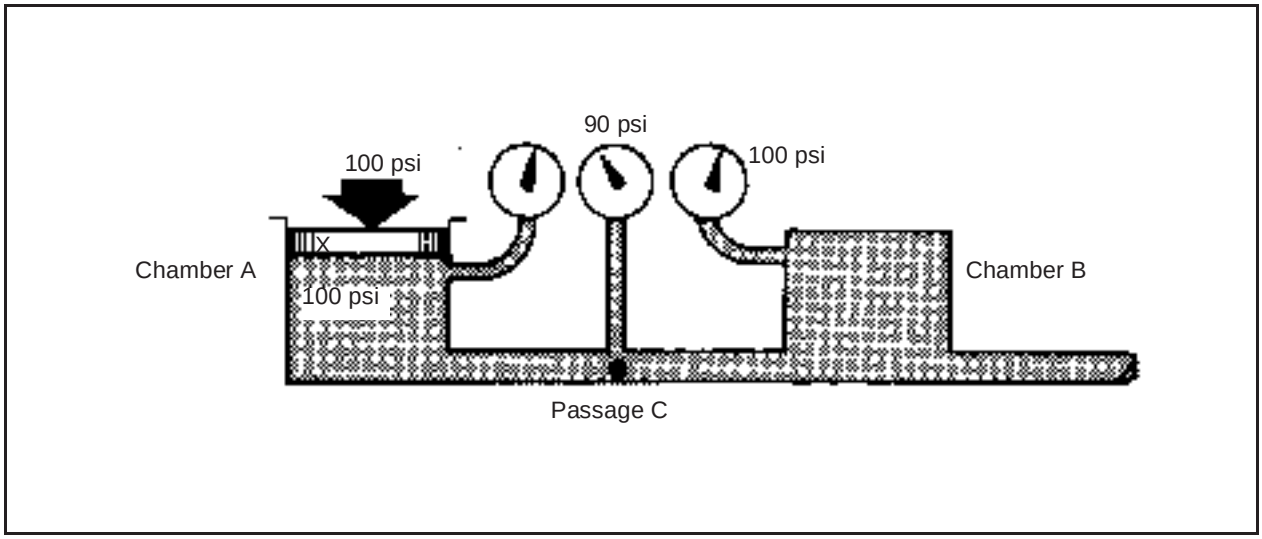

Figure 1-10. Bernouilli's Principle

static pressure of a moving liquid varies inversely with its velocity; that is, as velocity increases, static pressure decreases. In the figure, the force on piston X is sufficient to create a pressure of 100 psi on chamber A. As piston X moves down, the liquid that is forced out of chamber A must pass through passage C to reach chamber B. The velocity increases as it passes through C because the same quantity of liquid must pass through a narrower area in the same time. Some of the 100 psi static pressure in chamber A is converted into velocity energy in passage C so that a pressure gauge at this point registers 90 psi. As the liquid passes through C and reaches chamber B, velocity decreases to its former rate, as indicated by the static pressure reading of 100 psi, and some of the kinetic energy is converted to potential energy.

Figure 1-11 shows the combined effects of friction and velocity changes. As in Figure 1-9, page 1-7, pressure drops from maximum at C to zero at B. At D, velocity is increased, so the pressure head decreases. At E, the head increases as most of the kinetic energy is given up to pressure energy because velocity is decreased. At F, the head drops as velocity increases.

e. *Work*. To do work in a hydraulic system, flow must be present. Work, therefore, exerts a force over a definite distance. It is a measure of force multiplied by distance.

f. *Power*. The standard unit of power is horsepower (hp). One hp is equal to 550 ft lb of work every second. Use the following equation to find power:

$$P = f \times d / t$$

where—

P = power, in hp
f = force, in GPM
d = distance, in psi
t = time (1,714)

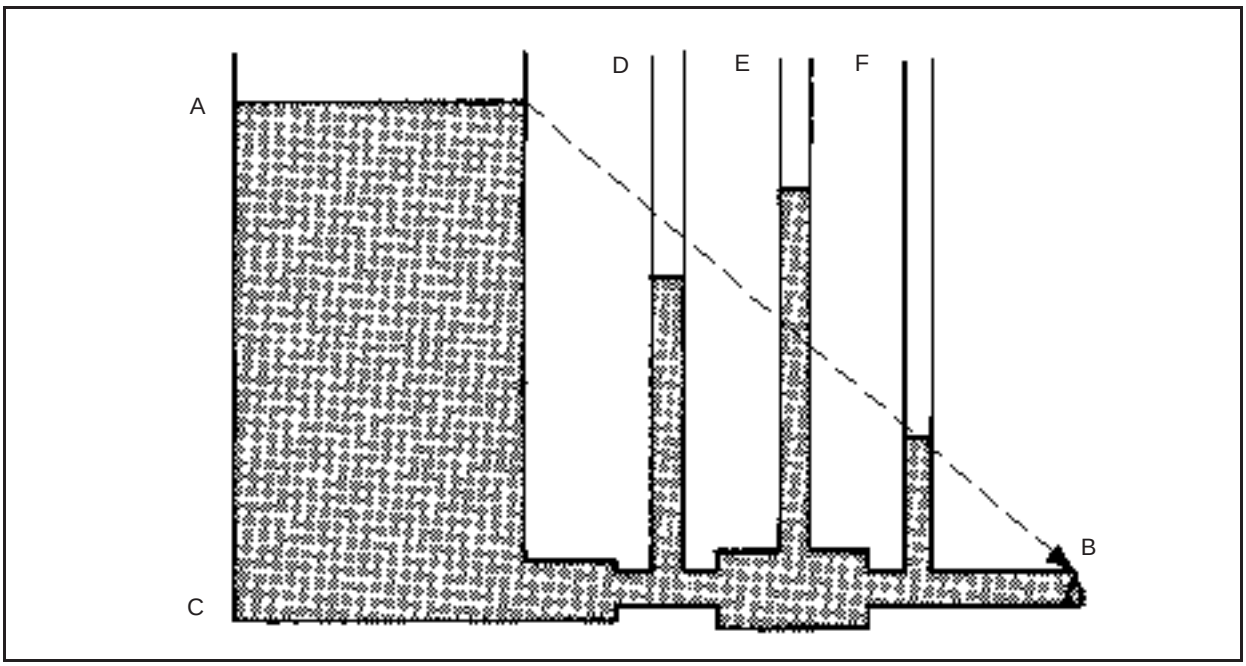

Figure 1-11. Combined effects of friction and velocity changes

CHAPTER 2

Hydraulic Systems

A hydraulic system contains and confines a liquid in such a way that it uses the laws governing liquids to transmit power and do work. This chapter describes some basic systems and discusses components of a hydraulic system that store and condition the fluid. The oil reservoir (sump or tank) usually serves as a storehouse and a fluid conditioner. Filters, strainers, and magnetic plugs condition the fluid by removing harmful impurities that could clog passages and damage parts. Heat exchanges or coolers often are used to keep the oil temperature within safe limits and prevent deterioration of the oil. Accumulators, though technically sources of stored energy, act as fluid storehouses.

2-1. Basic Systems. The advantages of hydraulic systems over other methods of power transmission are—

- Simpler design. In most cases, a few pre-engineered components will replace complicated mechanical linkages.
- Flexibility. Hydraulic components can be located with considerable flexibility. Pipes and hoses in place of mechanical elements virtually eliminate location problems.
- Smoothness. Hydraulic systems are smooth and quiet in operation. Vibration is kept to a minimum.
- Control. Control of a wide range of speed and forces is easily possible.
- Cost. High efficiency with minimum friction loss keeps the cost of a power transmission at a minimum.
- Overload protection. Automatic valves guard the system against a breakdown from overloading.

The main disadvantage of a hydraulic system is maintaining the precision parts when they are exposed to bad climates and dirty atmospheres. Protection against rust, corrosion, dirt, oil deterioration, and other adverse environment is very important. The following paragraphs discuss several basic hydraulic systems.

a. *Hydraulic Jack*. In this system (Figure 2-1, page 2-2), a reservoir and a system of valves has been added to Pascal's hydraulic lever to stroke a small cylinder or pump continuously and raise a large piston or an actuator a notch with each stroke. Diagram A shows an intake stroke. An outlet check valve closes by pressure under a load, and an inlet check valve opens so that liquid from the reservoir fills the pumping chamber. Diagram B shows the pump stroking downward. An inlet check valve closes by pressure and an outlet valve opens. More liquid is pumped under a large piston to raise it. To lower a load, a third valve (needle valve) opens, which opens an area under a large piston to the reservoir. The load then pushes the piston down and forces the liquid into the reservoir.

b. *Motor-Reversing System*. Figure 2-2, page 2-3, shows a power-driven pump operating a reversible rotary motor. A reversing valve directs fluid to either side of the motor and back

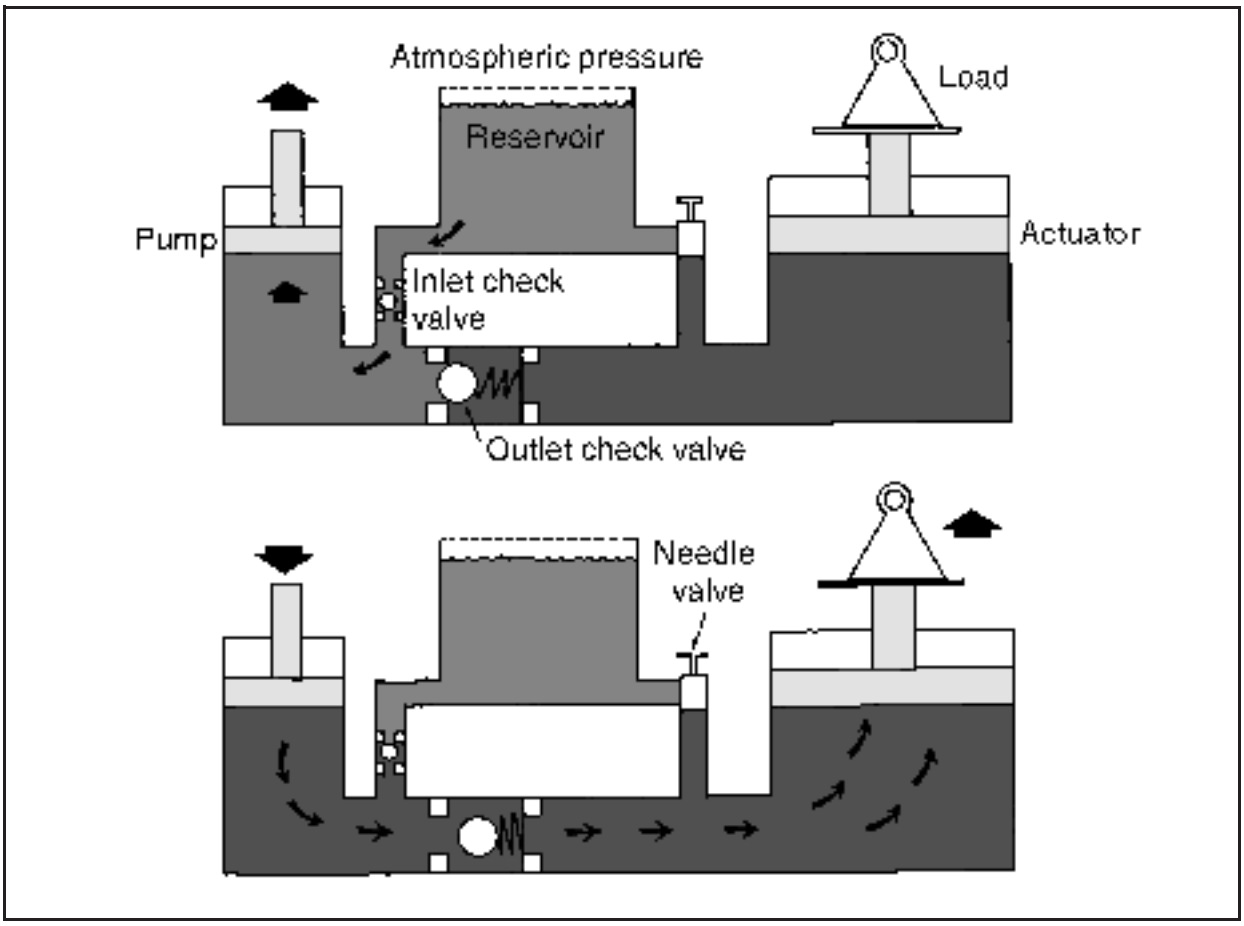

Figure 2-1. Hydraulic jack

to the reservoir. A relief valve protects the system against excess pressure and can bypass pump output to the reservoir, if pressure rises too high.

c. *Open-Center System*. In this system, a control-valve spool must be open in the center to allow pump flow to pass through the valve and return to the reservoir. Figure 2-3, page 2-4, shows this system in the neutral position. To operate several functions simultaneously, an open-center system must have the correct connections, which are discussed below. An open-center system is efficient on single functions but is limited with multiple functions.

(1) Series Connection. Figure 2-4, page 2-4, shows an open-center system with a series connection. Oil from a pump is routed to the three control valves in series. The return from the first valve is routed to the inlet of the second, and so on. In neutral, the oil passes through the valves in series and returns to the reservoir, as the arrows indicate. When a control valve is operated, the incoming oil is diverted to the cylinder that the valve serves. Return liquid from the cylinder is directed through the return line and on to the next valve.

This system is satisfactory as long as only one valve is operating at a time. When this happens, the full output of the pump at full system pressure is available to that function. However, if more than one valve is operating, the total of the pressures required for each function cannot exceed the system's relief setting.

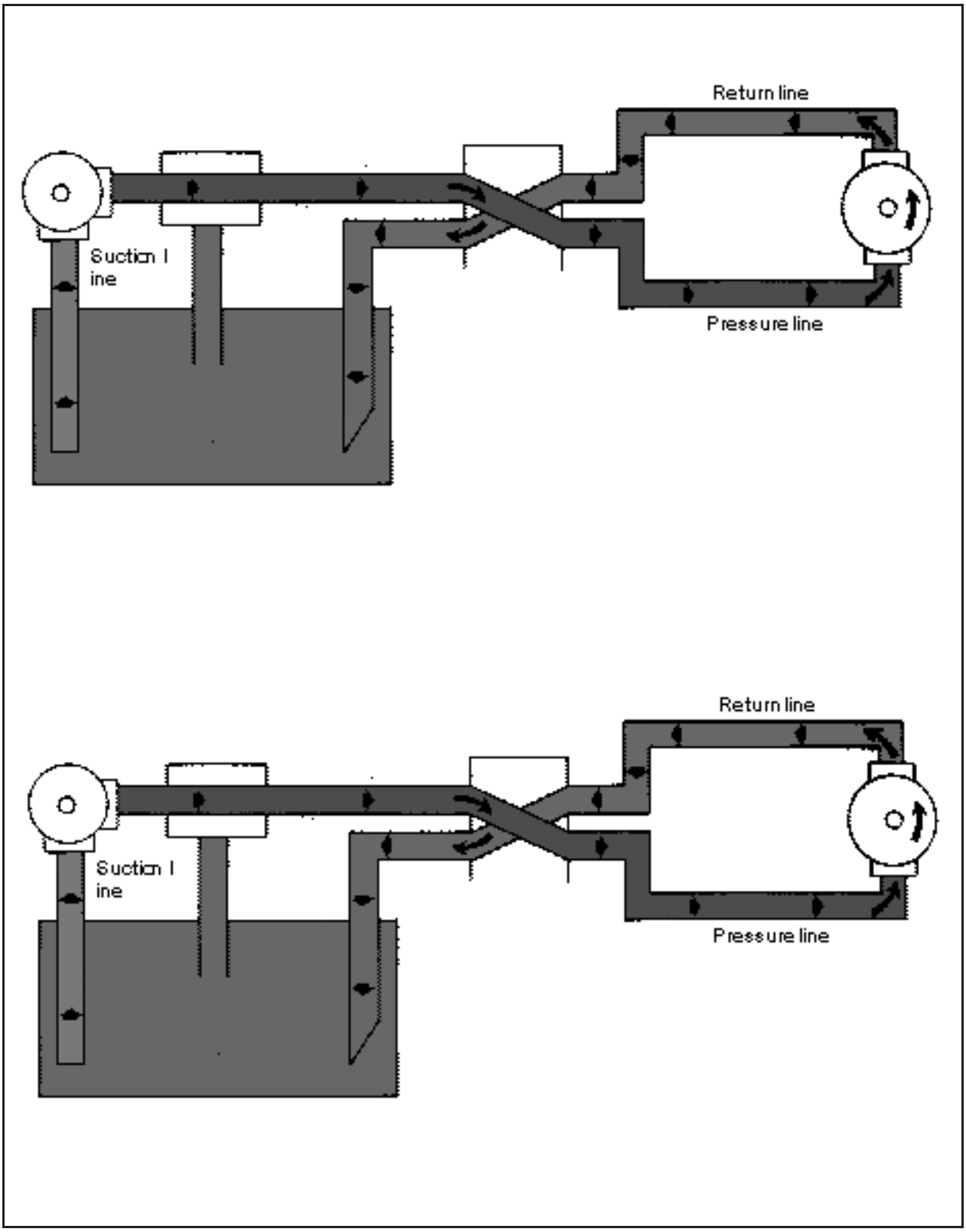

Figure 2-2. Motor-reversing system

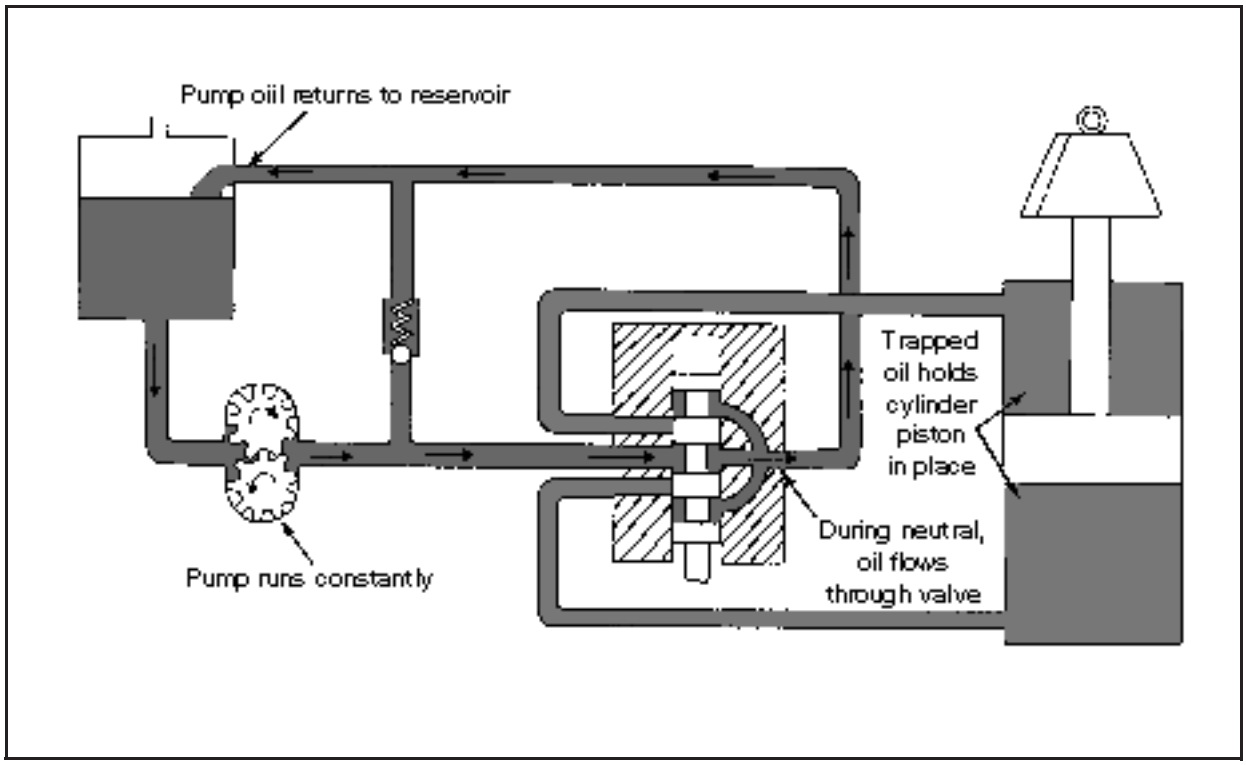

Figure 2-3. Open-center system

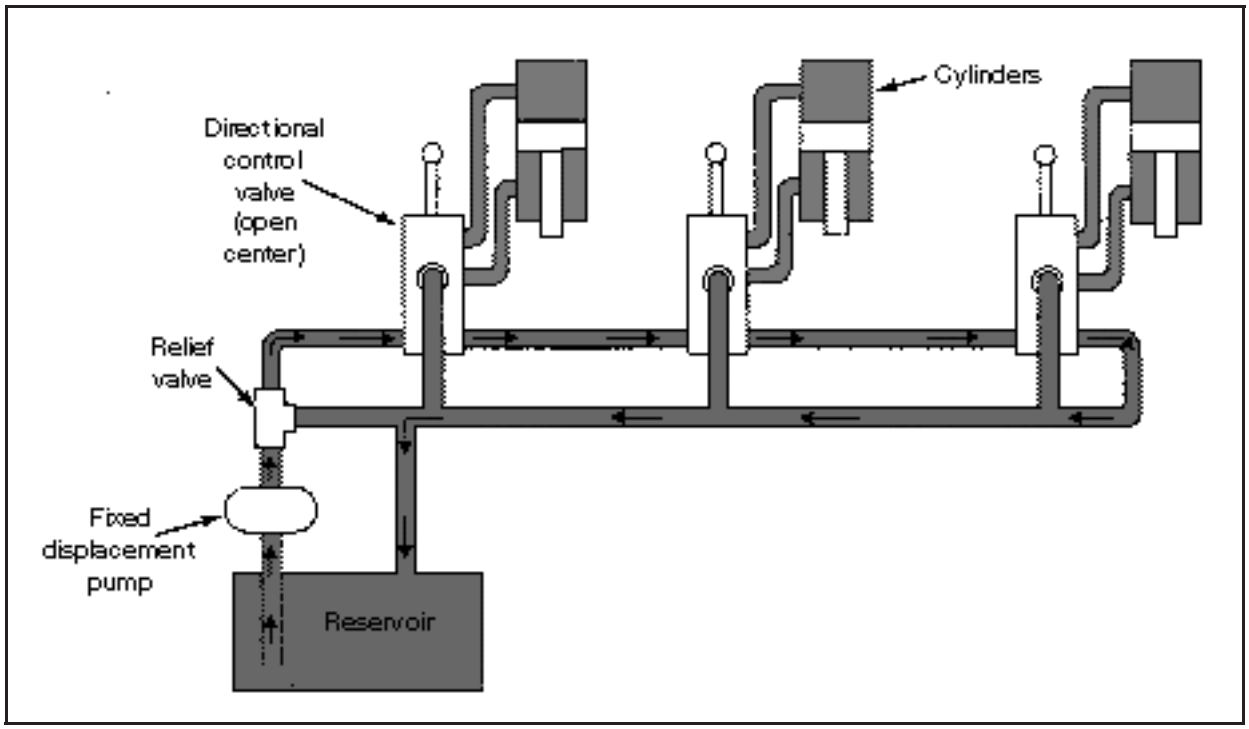

Figure 2-4. Open-center system with a series connection

(2) Series/Parallel Connection. Figure 2-5 shows a variation on the series-connected type. Oil from the pump is routed through the control valves in series, as well as in parallel. The valves are sometimes stacked to allow for extra passages. In neutral, a liquid passes through the valves in series, as the arrows indicate. However, when any valve is operating, the return is closed and the oil is available to all the valves through the parallel connection.

When two or more valves are operated at once, the cylinder that needs the least pressure will operate first, then the cylinder with the next least, and so on. This ability to operate two or more valves simultaneously is an advantage over the series connection.

(3) Flow Divider. Figure 2-6, page 2-6, shows an open-center system with a flow divider. A flow divider takes the volume of oil from a pump and divides it between two functions. For example, a flow divider might be designed to open the left side first in case both control valves were actuated simultaneously. Or, it might divide the oil to both sides, equally or by percentage. With this system, a pump must be large enough to operate all the functions simultaneously. It must also supply all the liquid at the maximum pressure of the highest function, meaning large amounts of HP are wasted when operating only one control valve.

d. *Closed-Center System*. In this system, a pump can rest when the oil is not required to operate a function. This means that a control valve is closed in the center, stopping the flow of the oil from the pump. Figure 2-7, page 2-6, shows a closed-center system. To operate several functions simultaneously, a closed-center system have the following connections:

(1) Fixed-Displacement Pump and Accumulator. Figure 2-8, page 2-7, shows a closed-center system. In this system, a pump of small but constant volume charges an accumulator.

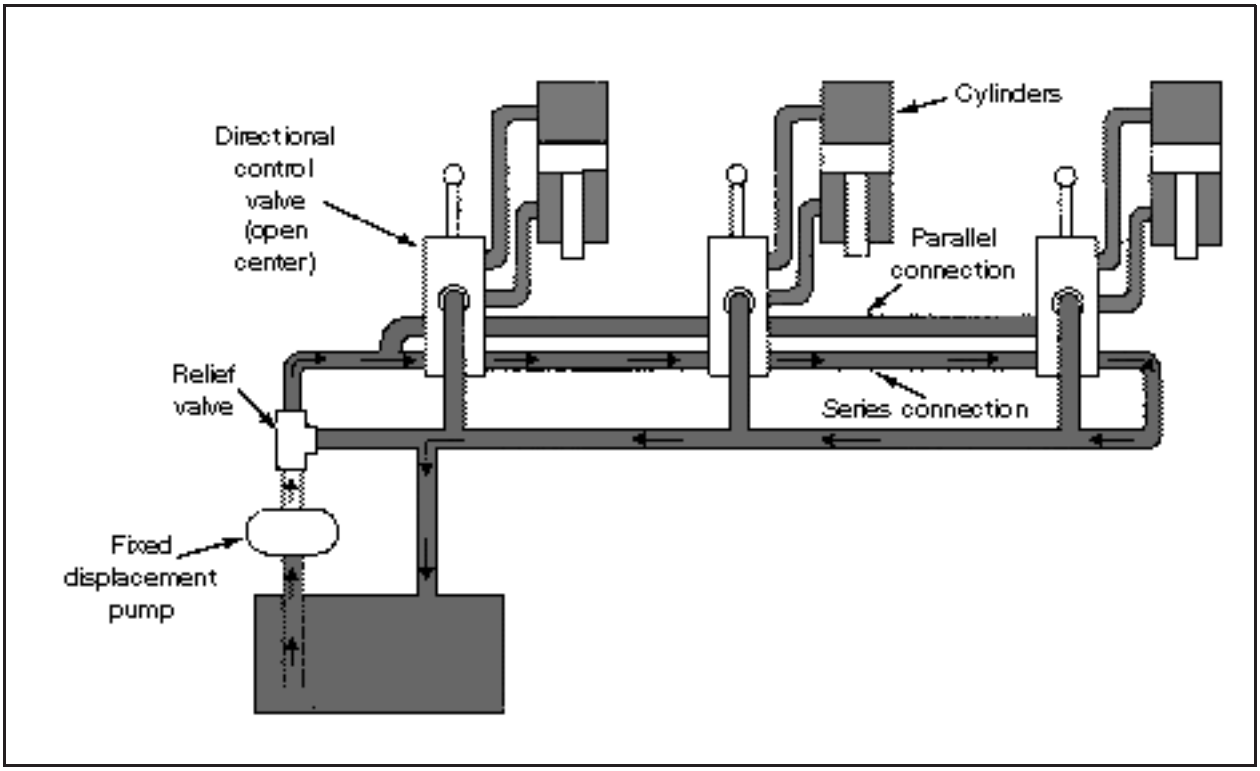

Figure 2-5. Open-center system with a series/parallel connection

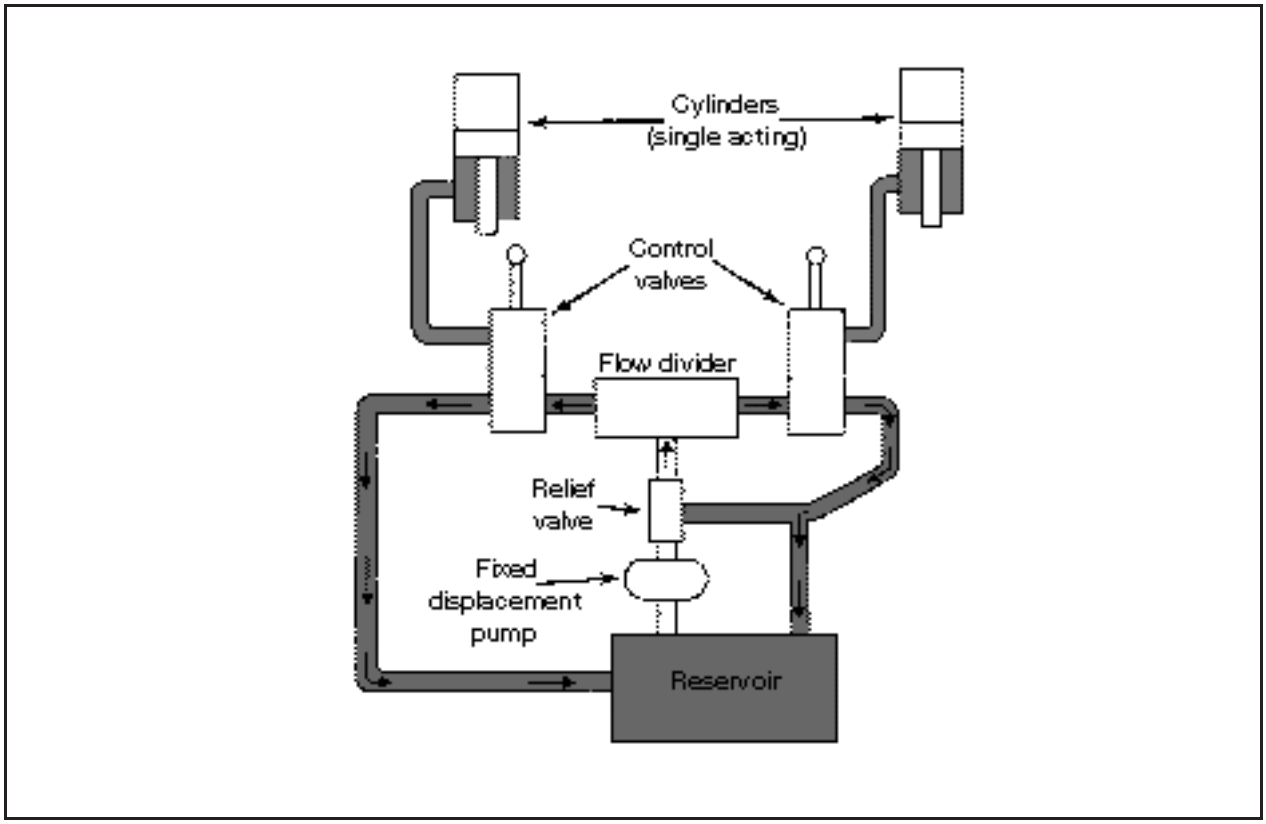

Figure 2-6. Open-center system with a flow divider

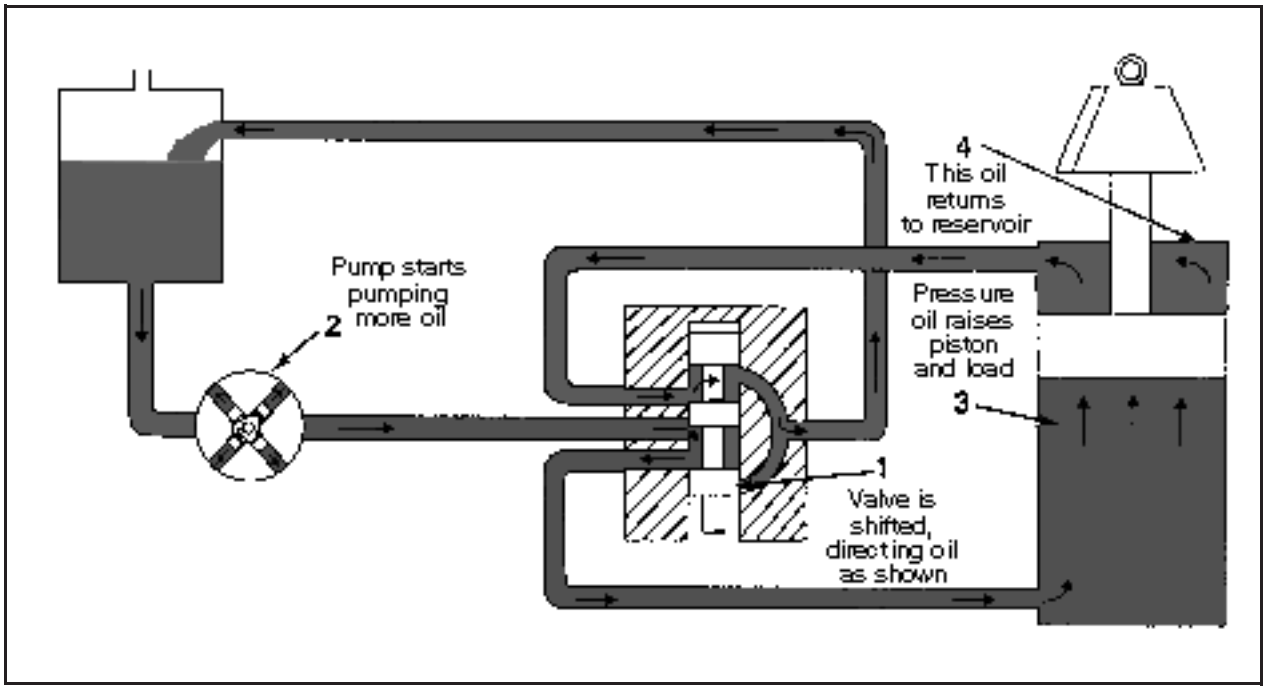

Figure 2-7. Closed-center system

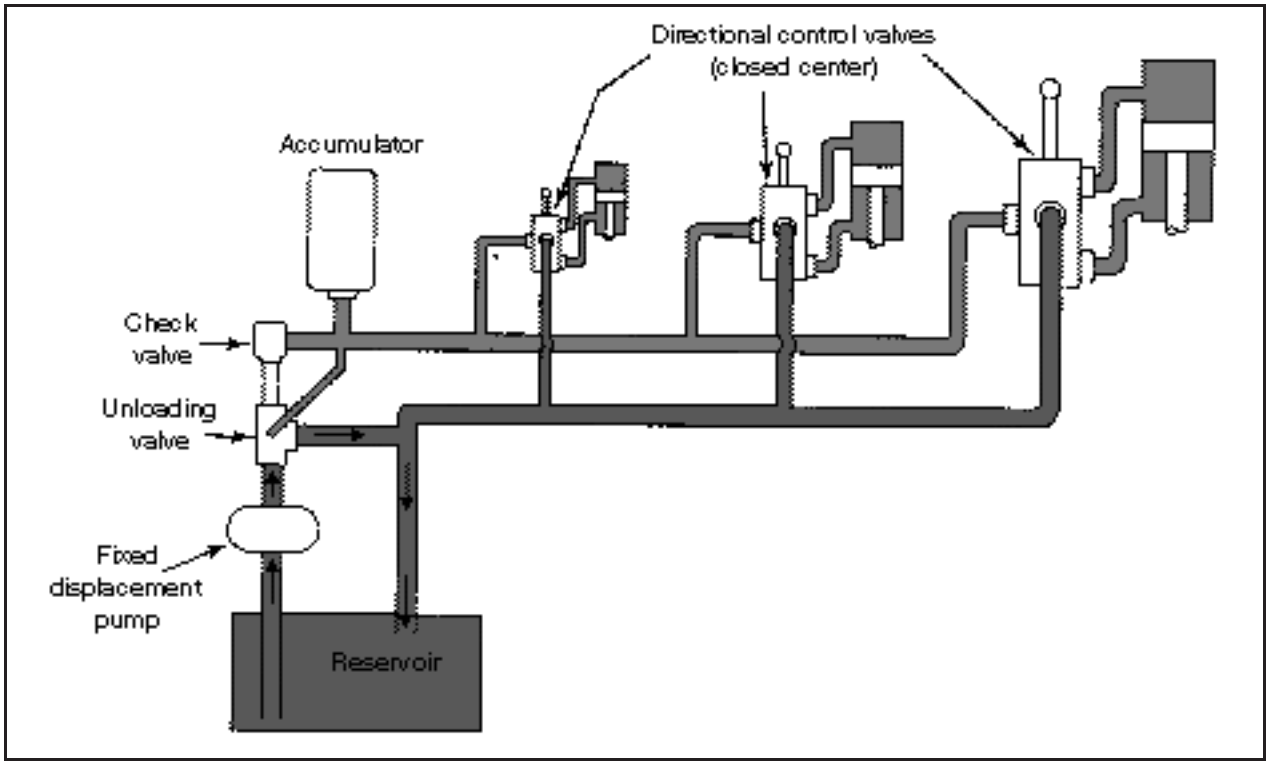

Figure 2-8. Fixed-displacement pump and accumulator

When an accumulator is charged to full pressure, an unloading valve diverts the pump flow back to a reservoir. A check valve traps the pressured oil in the circuit.

When a control valve is operated, an accumulator discharges its oil and actuates a cylinder. As pressure begins to drop, an unloading valve directs the pump flow to an accumulator to recharge the flow. This system, using a small capacity pump, is effective when operating oil is needed only for a short time. However, when the functions need a lot of oil for longer periods, an accumulator system cannot handle it unless the accumulator is very large.

(2) Variable-Displacement Pump. Figure 2-9, page 2-8, shows a closed-center system with a variable-displacement pump in the neutral mode. When in neutral, oil is pumped until the pressure rises to a predetermined level. A pressure-regulating valve allows the pump to shut off by itself and maintain this pressure to the valve. When the control valve is operating, oil is diverted from the pump to the bottom of a cylinder. The drop in pressure caused by connecting the pump's pressure line to the bottom of the cylinder causes the pump to go back to work, pumping oil to the bottom of the piston and raising the load.

When the valve moves, the top of the piston connects to a return line, which allows the return oil that was forced from the piston to return to the reservoir or pump. When the valve returns to neutral, oil is trapped on both sides of the cylinder, and the pressure passage from the pump is dead-ended. After this sequence, the pump rests. Moving the spool in the downward position directs oil to the top of the piston, moving the load downward. The oil from the bottom of the piston is sent into the return line.

Figure 2-10, page 2-8, shows this closed-center system with a charging pump, which pumps oil from the reservoir to the variable-displacement pump. The charging pump supplies

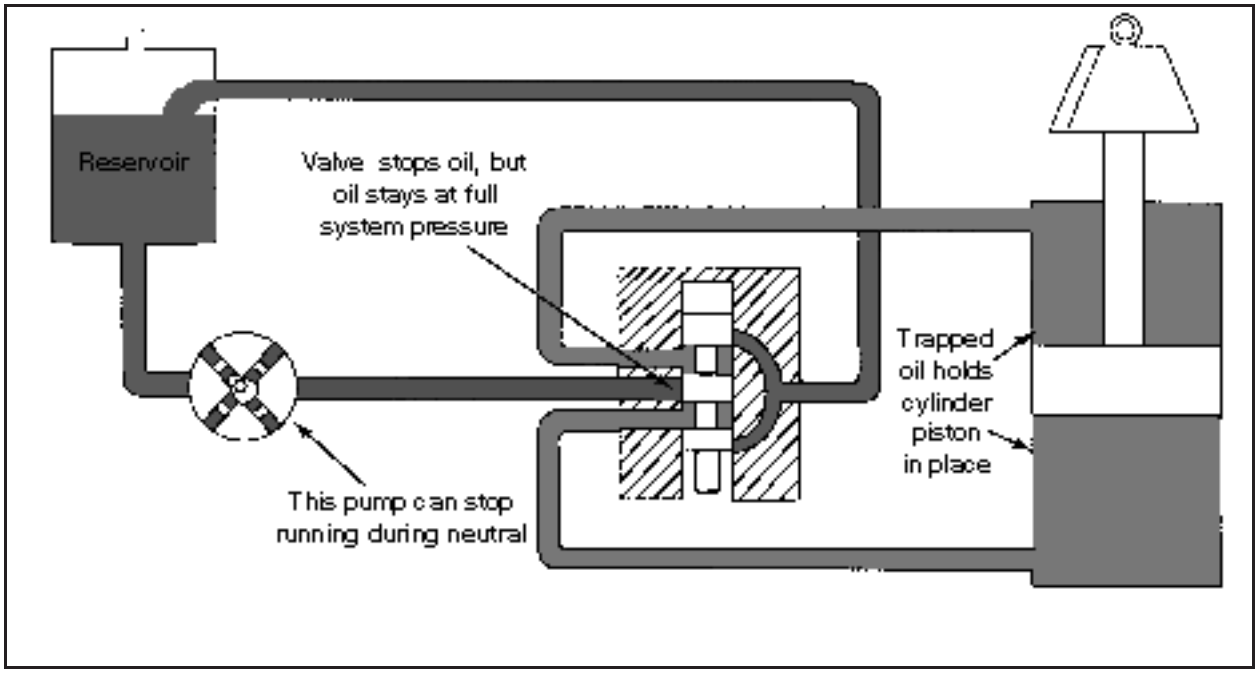

Figure 2-9. Variable-displacement pump

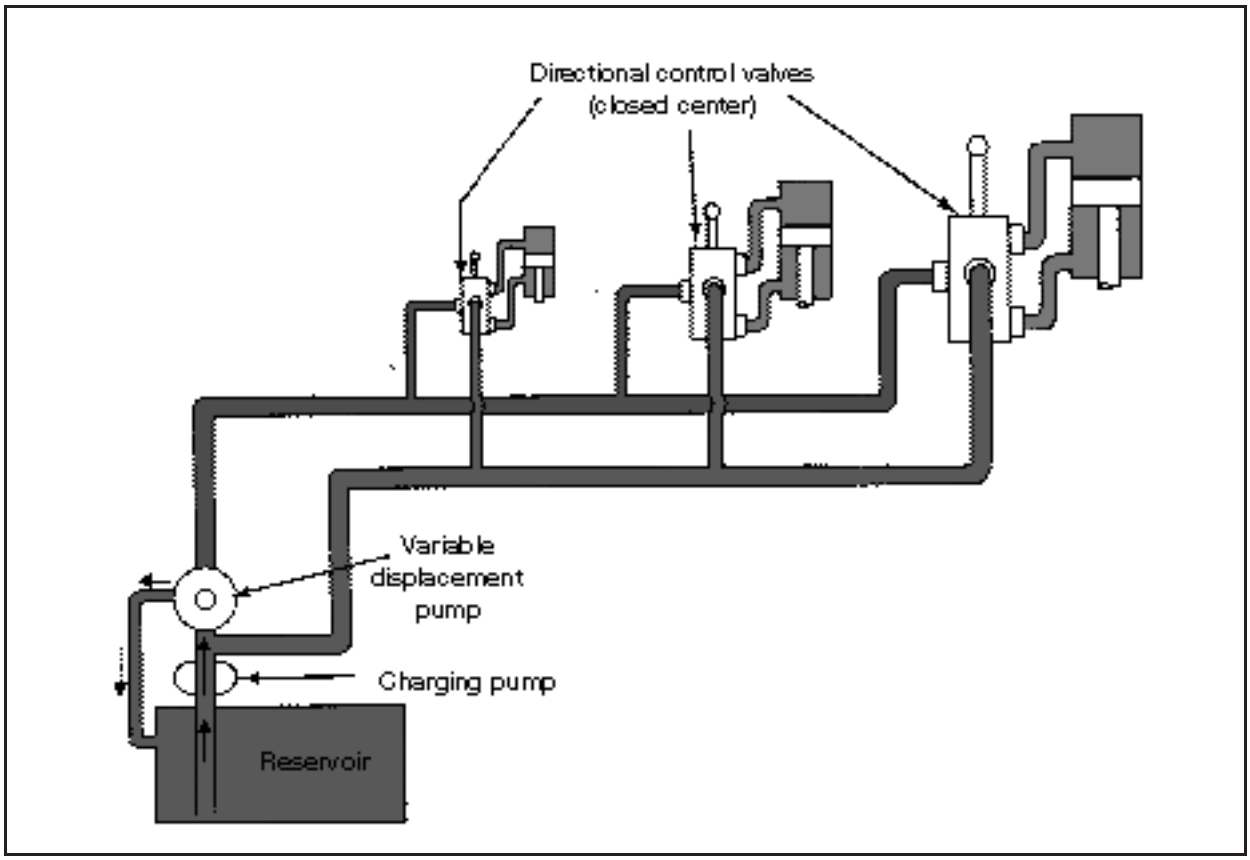

Figure 2-10. Closed-center system with charging pump

only the makeup oil required in a system and provides some inlet pressure to make a variable-displacement pump more efficient. The return oil from a system's functions is sent directly to the inlet of a variable-displacement pump.

Because today's machines need more hydraulic power, a closed-center system is more advantageous. For example, on a tractor, oil may be required for power steering, power brakes, remote cylinders, three-point hitches, loaders, and other mounted equipment. In most cases, each function requires a different quantity of oil. With a closed-center system, the quantity of oil to each function can be controlled by line or valve size or by orificing with less heat build up when compared to the flow dividers necessary in a comparable open-center system. Other advantages of a closed-center system are as follows:

- It does not require relief valves because the pump simply shuts off by itself when standby pressure is reached. The prevents heat buildup in systems where relief pressure is frequently reached.
- The size of the lines, valves, and cylinders can be tailored to the flow requirements of each function.
- Reserve flow is available, by using a larger pump, to ensure full hydraulic speed at low engine revolutions per minute (rpm). More functions can be served.
- It is more efficient on functions such as brakes, which require force but very little piston movement. By holding the valve open, standby pressure is constantly applied to the brake piston with no efficiency loss because the pump has returned to standby.

2-2. Color Coding. In this manual, the figures that show oil-flow conditions or paths are prepared with industrial standardized color codes. Table 2-1 lists the colors for the hydraulic lines and passages that are in many of the figures:

Table 2-1: Figure colors

Line/Passage	Color
Operating pressure	Red
Exhaust	Blue
Intake or drain	Green
Metered flow	Yellow

2-3. Reservoirs. A reservoir stores a liquid that is not being used in a hydraulic system. It also allows gases to expel and foreign matter to settle out from a liquid.

a. *Construction*. A properly constructed reservoir should be able to dissipate heat from the oil, separate air from the oil, and settle out contaminates that are in it. Reservoirs range in construction from small steel stampings to large cast or fabricated units. The large tanks should be sandblasted after all the welding is completed and then flushed and steam cleaned. Doing so removes welding scale and scale left from hot-rolling the steel. The inner surface then should be sealed with a paint compatible with the hydraulic fluid. Nonbleeding red engine enamel is suitable for petroleum oil and seals in any residual dirt not removed by flushing and steam-cleaning.

b. *Shape*. Figure 2-11 shows some of the design features of a reservoir. It should be high and narrow rather than shallow and broad. The oil level should be as high as possible above the opening to a pump's suction line. This prevents the vacuum at the line opening from causing a vortex or whirlpool effect, which would mean that a system is probably taking in air. Aerated oil will not properly transmit power because air is compressible. Aerated oil has a tendency to break down and lose its lubricating ability.

c. *Size*. Reservoir sizes will vary. However, a reservoir must be large enough so that it has a reserve of oil with all the cylinders in a system fully extended. An oil reserve must be high enough to prevent a vortex at the suction line's opening. A reservoir must have sufficient space to hold all the oil when the cylinders are retracted, as well as allow space for expansion when the oil is hot.

A common-size reservoir on a mobile machine is a 20- or 30-gallon tank used with a 100-GPM system. Many 10-GPM systems operate with 2- or 3-gallon tanks because these mobile systems operate intermittently, not constantly. For stationary machinery, a rule of thumb is that a reservoir's size should be two to three times a pump's output per minute.

A large size tank is highly desirable for cooling. The large surface areas exposed to the outside air transfer heat from the oil. Also, a large tank helps settle out the contaminates and separates the air by reducing recirculation.

d. *Location*. Most mobile equipment reservoirs are located above the pumps. This creates a flooded-pump-inlet condition. This condition reduces the possibility of pump

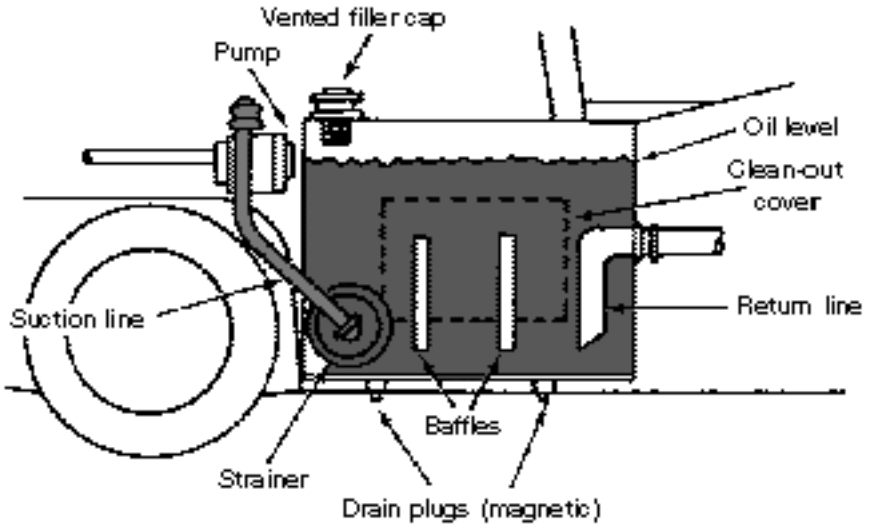

Figure 2-11. Design features of a reservoir

cavitation—a condition where all the available space is not filled and often metal parts will erode. Flooding the inlet also reduces the vortex tendency at a suction pipe's opening.

The location of a reservoir affects heat dissipation. Ideally, all tank walls should be exposed to the outside air. Heat moves from a hot substance to a cold substance; heat transfer is greatest when there is a large temperature difference. Reservoirs that are built into front-end loader arms are very effective in transferring heat.

e. *Ventilation and Pressurization*. Most reservoirs are vented to the atmosphere. A vent opening allows air to leave or enter the space above the oil as the level of the oil goes up or down. This maintains a constant atmospheric pressure above the oil. A reservoir filter cap, with a filter element, is often used as a vent.

Some reservoirs are pressurized, using a simple pressure-control valve rather than a vented one. A pressure-control valve automatically lets filtered air into a tank but prevents air release unless the pressure reaches a preset level. A pressurized reservoir takes place when the oil and air in a tank expand from heat.

f. *Line Connections*. A pump suction and a tank's return lines should be attached by flanges or by welded heavy-duty couplings. Standard couplings usually are not suitable because they spread when welded. If a suction line is connected at the bottom, a coupling should extend well above the bottom, inside the tank; residual dirt will not get in a suction line when a tank or strainer is cleaned. A return line should discharge near a tank's bottom always below the oil level. A pipe is usually cut at a 45-degree angle and the flow aimed away from a suction line to improve circulation and cooling.

A baffle plate is used to separate a suction line from a return line. This causes the return oil to circulate around an outer wall for cooling before it gets to the pump again. A baffle plate should be about two-thirds the height of a tank. The lower corners are cut diagonally to allow circulation. They must be larger in area than a suction line's cross section. Otherwise the oil level between a return and a suction side might be uneven. Baffling also prevents oil from sloshing around when a machine is moving. Many large reservoirs are cross-baffled to provide cooling and prevent sloshing.

g. *Maintenance*. Maintenance procedures include draining and cleaning a reservoir. A tank should have a dished bottom that is fitted with a drain plug at its lowest point; a plug fitting should be flushed with the inside of a tank to allow for full drainage. On large tanks, access plates may be bolted on the ends for easy removal and servicing. A reservoir should have a sight gauge or dipstick for checking the oil level to prevent damage from lubrication loss.

The strainers on a pump's suction line may not require as much maintenance. However, an element in a filter in a return line will require regular changing. Therefore, that filter should not be inside a reservoir. When a reservoir is pressurized by compressed air, moisture can become a maintenance problem. A tank should have a water trap for moisture removal; it should be placed where it can be inspected daily.

2-4. Strainers and Filters. To keep hydraulic components performing correctly, the hydraulic liquid must be kept as clean as possible. Foreign matter and tiny metal particles from normal wear of valves, pumps, and other components are going to enter a system. Strainers, filters, and magnetic plugs are used to remove foreign particles from a hydraulic

liquid and are effective as safeguards against contamination. Magnetic plugs, located in a reservoir, are used to remove the iron or steel particles from a liquid.

a. *Strainers*. A strainer is the primary filtering system that removes large particles of foreign matter from a hydraulic liquid. Even though its screening action is not as good as a filter's, a strainer offer less resistance to flow. A strainer usually consists of a metal frame wrapped with a fine-mesh wire screen or a screening element made up of varying thickness of specially processed wire. Strainers are used to pump inlet lines (Figure 2-11, page 2-10) where pressure drop must be kept to a minimum.

Figure 2-12 shows a strainer in three possible arrangements for use in a pump inlet line. If one strainer causes excessive flow friction to a pump, two or more can be used in parallel. Strainers and pipe fittings must always be below the liquid level in the tank.

b. *Filters*. A filter removes small foreign particles from a hydraulic fluid and is most effective as a safeguard against contaminates. Filters are located in a reservoir, a pressure line, a return line, or in any other location where necessary. They are classified as full flow or proportional flow.

(1) Full-Flow Filter (Figure 2-13). In a full-flow filter, all the fluid entering a unit passes through a filtering element. Although a full-flow type provides a more positive filtering action, it offers greater resistance to flow, particularly when it becomes dirty. A hydraulic liquid enters a full-flow filter through an inlet port in the body and flows around an

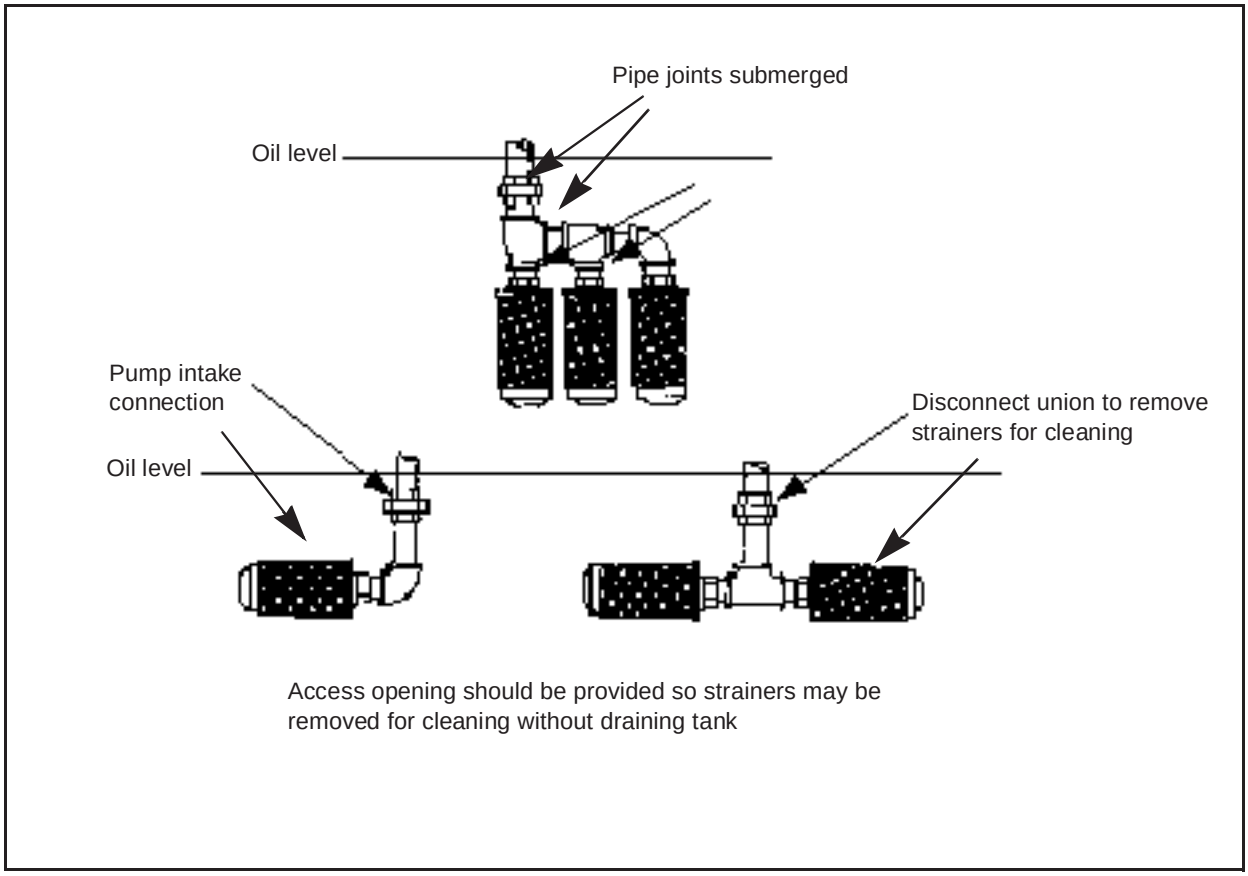

Figure 2-12. Hydraulic-system strainers

element inside a bowl. Filtering occurs as a liquid passes through the element and into a hollow core, leaving the dirt and impurities on the outside of the element. A filtered liquid then flows from a hollow core to an outlet port and into the system.

A bypass relief valve in a body allows a liquid to bypass the element and pass directly through an outlet port when the element becomes clogged. Filters that do not have a bypass relief valve have a contamination indicator. This indicator works on the principle of the difference in pressure of a fluid as it enters a filter and after it leaves an element. When contaminating particles collect on the element, the differential pressure across it increases. When a pressure increase reaches a specific value, an indicator pops out, signifying that the element must be cleaned or replaced.

(2) Proportional-Flow Filters (Figure 2-14). This filter operates on the venturi principle in which a tube has a narrowing throat (venturi) to increase the velocity of fluid flowing through it. Flow through a venturi throat causes a pressure drop at the narrowest point. This pressure decrease causes a sucking action that draws a portion of a liquid down around a cartridge through a filter element and up into a venturi throat. Filtering occurs for either flow direction. Although only a portion of a liquid is filtered during each cycle, constant recirculation through a system eventually causes all of a liquid to pass through the element. Replace the element according to applicable regulations and by doing the following:

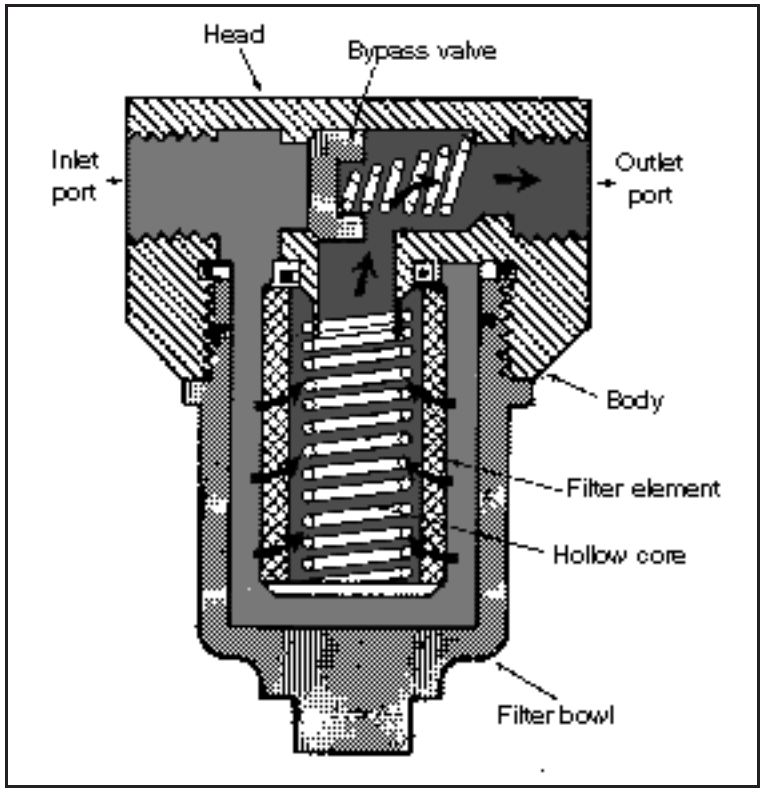

Figure 2-13. Full-flow hydraulic filter

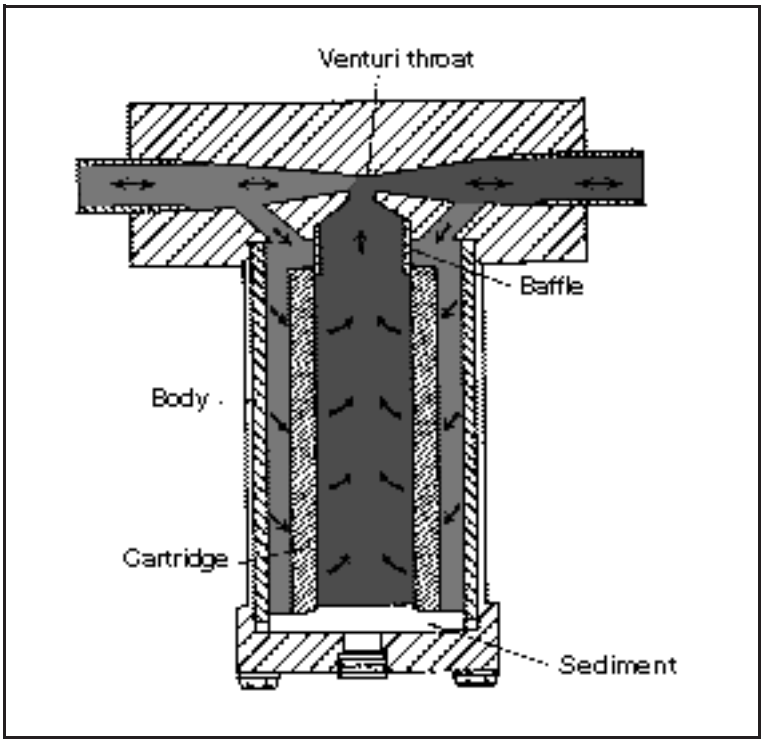

Figure 2-14. Proportional-flow filter

- Relieve the pressure.
- Remove the bowl from the filter's body.
- Remove the filter element from the body, using a slight rocking motion.
- Clean or replace the element, depending on its type.
- Replace all old *O*-ring packings and backup washers.
- Reinstall the bowl on the body assembly. Do not tighten the bowl excessively; check the appropriate regulations for specifications, as some filter elements require a specific torque.
- Pressurize the system and check the filter assembly for leaks.

2-5. Filtering Material and Elements. The general classes of filter materials are mechanical, absorbent inactive, and absorbent active.

- Mechanical filters contain closely woven metal screens or discs. They generally remove only fairly coarse particles.
- Absorbent inactive filters, such as cotton, wood pulp, yarn, cloth, or resin, remove much smaller particles; some remove water and water-soluble contaminants. The elements often are treated to make them sticky to attract the contaminantsfound in hydraulic oil.
- Absorbent active materials, such as charcoal and Fuller's Earth (a claylike material of very fine particles used in the purification of mineral or vegetable-base oils), are not recommended for hydraulic systems.

The three basic types of filter elements are surface, edge, and depth.

- A surface-type element is made of closely woven fabric or treated paper. Oil flows through the pores of the filter material, and the contaminants are stopped.
- An edge-type filter is made up of paper or metal discs; oil flows through the spaces between the discs. The fineness of the filtration is determined by the closeness of the discs.
- A depth-type element is made up of thick layers of cotton, felt, or other fibers.

2-6. Accumulators. Like an electrical storage battery, a hydraulic accumulator stores potential power, in this case liquid under pressure for future conversion into useful work. This work can include operating cylinders and fluid motors, maintaining the required system pressure in case of pump or power failure, and compensating for pressure loss due to leakage. Accumulators can be employed as fluid dispensers and fluid barriers and can provide a shock-absorbing (cushioning) action.

On military equipment, accumulators are used mainly on the lift equipment to provide positive clamping action on the heavy loads when a pump's flow is diverted to lifting or other operations. An accumulator acts as a safety device to prevent a load from being dropped in case of an engine or pump failure or fluid leak. On lifts and other equipment, accumulators absorb shock, which results from a load starting, stopping, or reversal.

a. *Spring-Loaded Accumulator*. This accumulator is used in some engineer equipment hydraulic systems. It uses the energy stored in springs to create a constant force on the liquid contained in an adjacent ram assembly. Figure 2-15 shows two spring-loaded accumulators.

The load characteristics of a spring are such that the energy storage depends on the force required to compress s spring. The free (uncompressed) length of a spring represents

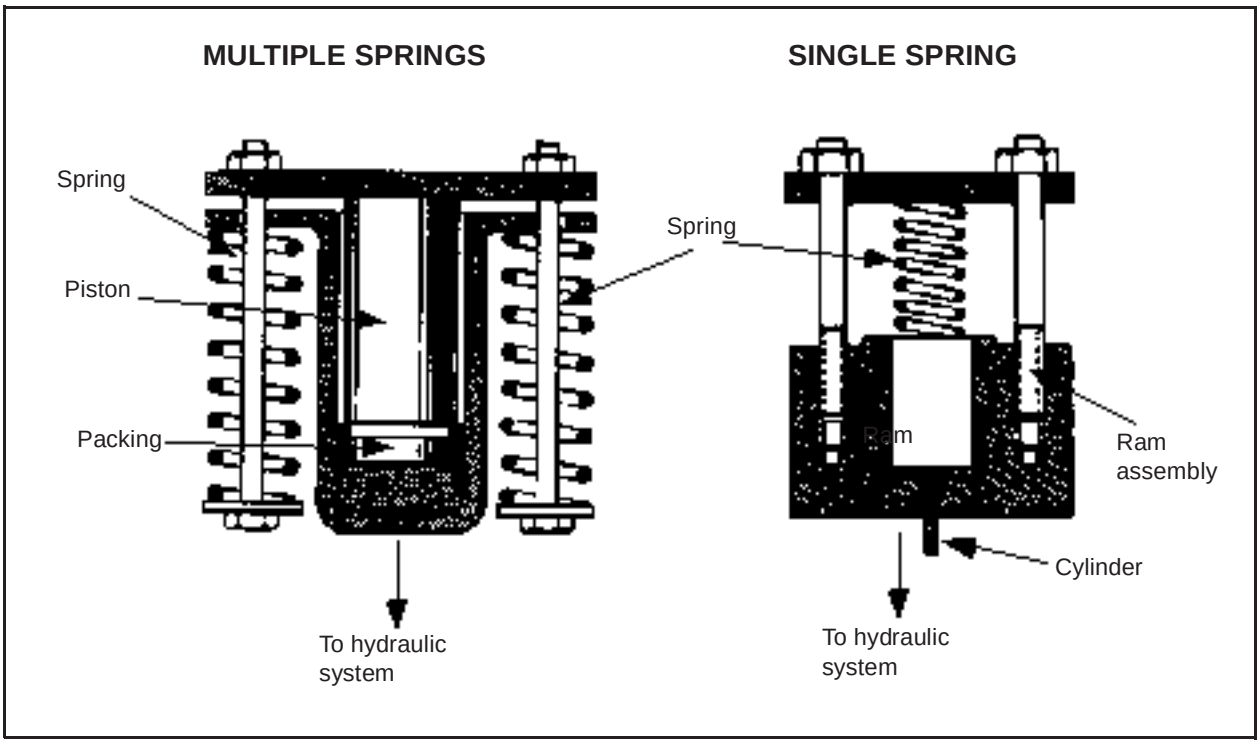

Figure 2-15. Spring-loaded accumulator

zero energy storage. As a spring is compressed to the maximum installed length, a minimum pressure value of the liquid in a ram assembly is established. As liquid under pressure enters the ram cylinder, causing a spring to compress, the pressure on the liquid will rise because of the increased loading required to compress the spring.

b. *Bag-Type Accumulator*. This accumulator (Figure 2-16, page 2-16) consists of a seamless high-pressure shell, cylindrical in shape, with domed ends and a synthetic rubber bag that separates the liquid and gas (usually nitrogen) within the accumulator. The bag is fully enclosed in the upper end of a shell. The gas system contains a high-pressure gas valve. The bottom end of the shell is sealed with a special plug assembly containing a liquid port and a safety feature that makes it impossible to disassemble the accumulator with pressure in the system. The bag is larger at the top and tapers to a smaller diameter at the bottom. As the pump forces liquid into the accumulator shell, the liquid presses against the bag, reduces its volume, and increases the pressure, which is then available to do work.

c. *Piston-Type Accumulator*. This accumulator consists of a cylinder assembly, a piston assembly, and two end-cap assemblies. The cylinder assembly houses a piston assembly and incorporates provisions for securing the end-cap assemblies. An accumulator contains a free-floating piston with liquid on one side of the piston and precharged air or nitrogen on the other side (Figure 2-17, page 2-16). An increase of liquid volume decreases the gas volume and increases gas pressure, which provides a work potential when the liquid is allowed to discharge.

d. *Maintenance*. Before removing an accumulator for repairs, relieve the internal pressure: in a spring-loaded type, relieve the spring tension; in a piston or bag type, relieve the gas or liquid pressure.

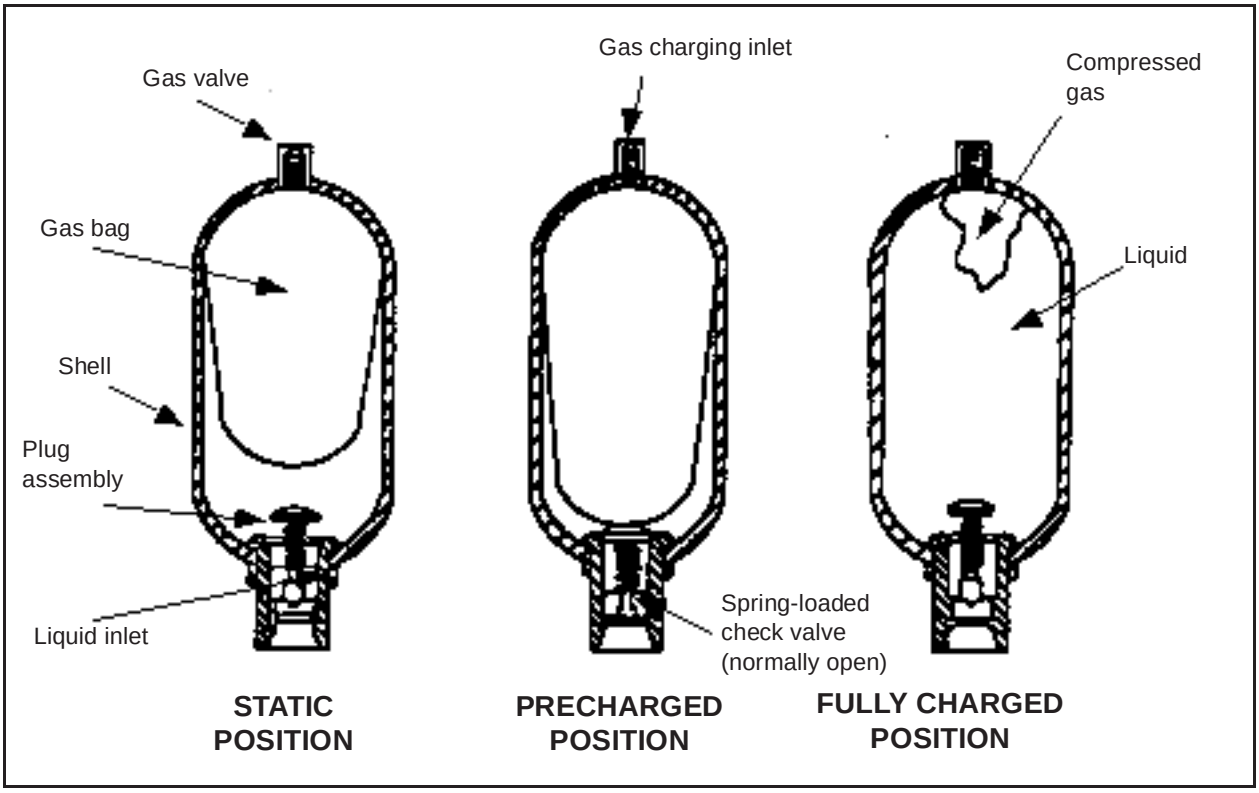

Figure 2-16. Bag-type accumulator

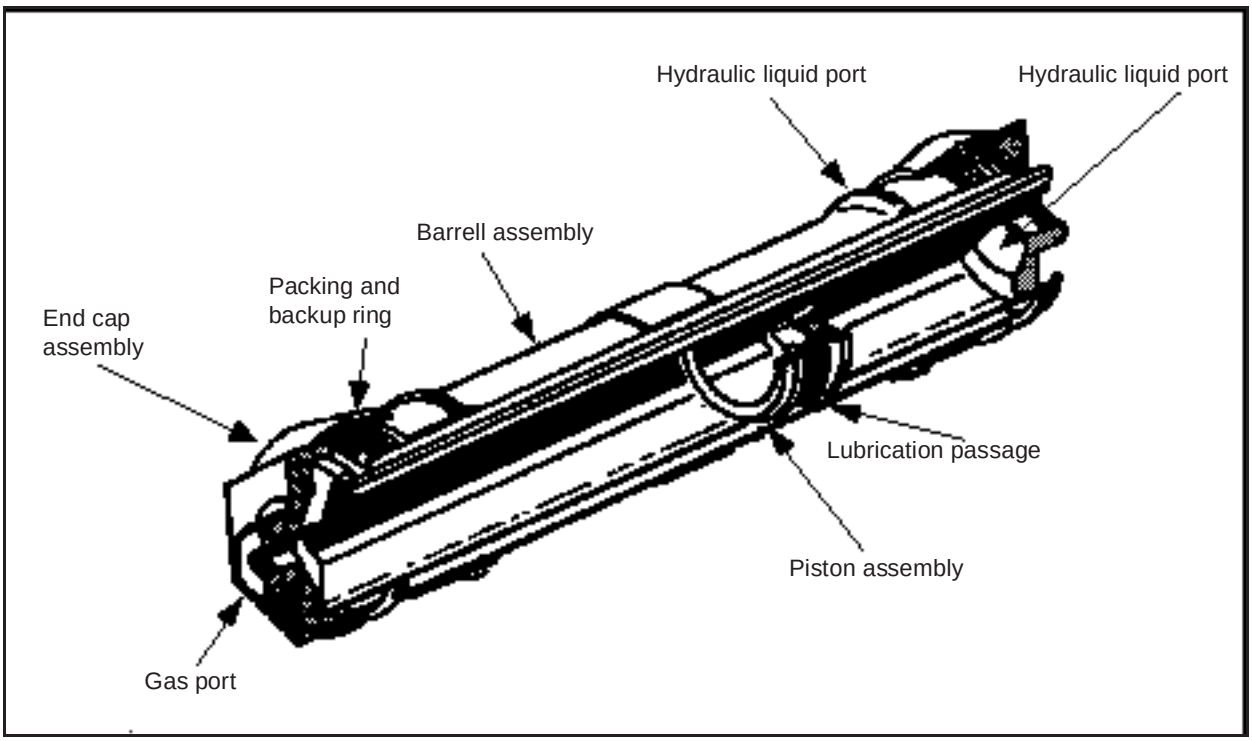

Figure 2-17. Piston-type accumulator

2-7. Pressure Gauges and Volume Meters. Pressure gauges are used in liquid-powered systems to measure pressure to maintain efficient and safe operating levels. Pressure is measured in psi. Flow measurement may be expressed in units of rate of flow—GPM or cubic feet per second (cfs). It may also be expressed in terms of total quantity—gallons or cubic feet.

a. *Pressure Gauges.* Figure 2-18 shows a simple pressure gauge. Gauge readings indicate the fluid pressure set up by an opposition of forces within a system. Atmospheric pressure is negligible because its action at one place is balanced by its equal action at another place in a system.

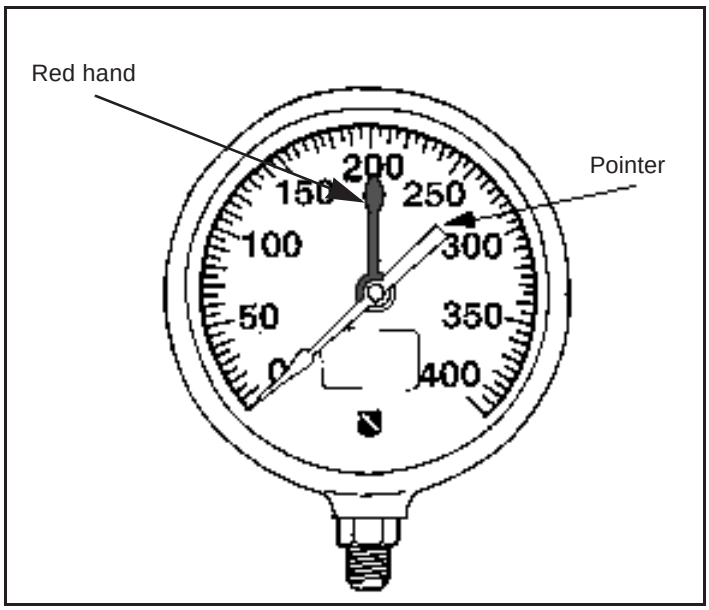

Figure 2-18. Pressure gauge

b. *Meters.* Measuring flow depends on the quantities, flow rates, and types of liquid involved. All liquid meters (flowmeters) are made to measure specific liquids and must be used only for the purpose for which they were made. Each meter is tested and calibrated.

In a nutating-piston-disc flowmeter, liquid passes through a fixed volume measuring chamber, which is divided into upper and lower compartments by a piston disc (Figure 2-19). During operation, one compartment is continually being filled while the other is being emptied. As a liquid passes through these compartments, its pressure causes a piston disc to roll around in the chamber. The disc's movements operate a dial (or counter) through gearing elements to indicate that a column of fluid that has passed through the meter.

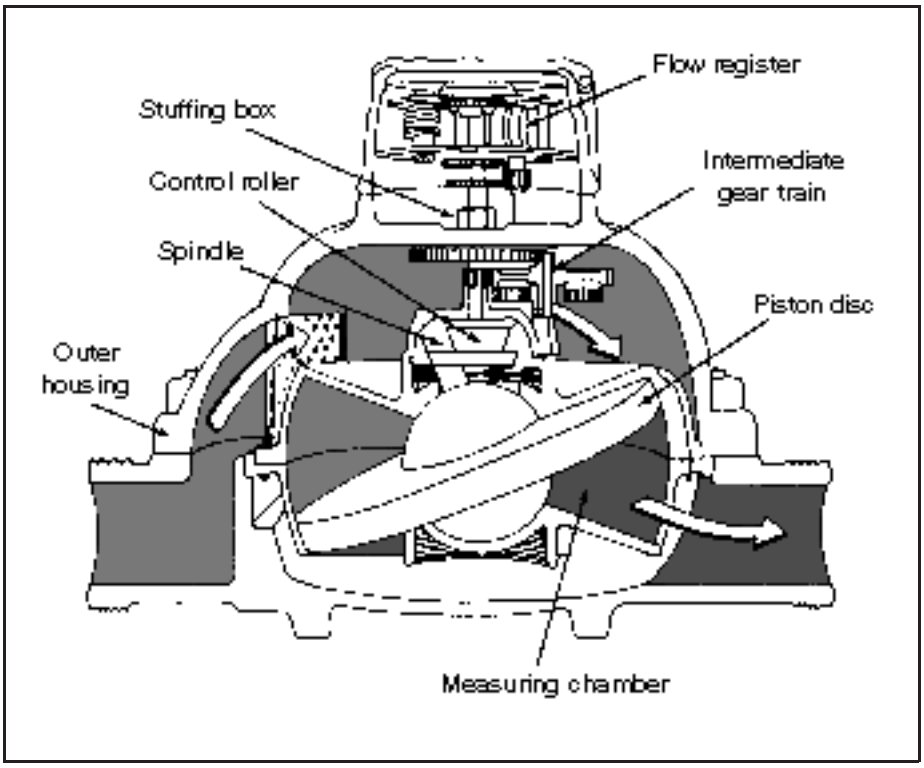

Figure 2-19. Nutating-piston-disc flowmeter

2-8. Portable Hydraulic-Circuit Testers. Hydraulic power is an efficient method of delivering HP by pumping a fluid through a closed system. If the amount of flow or the pressure unknowingly decreases, the amount of HP delivered to a working unit will be reduced, and a system will not perform as it should.

a. *Testers.* Portable hydraulic-circuit testers (Figure 2-20) are lightweight units you can use to check or troubleshoot a hydraulic-powered system on the job or in a maintenance shop. Connect a tester into a system's circuit to determine its efficiency. Currently, several hydraulic-circuit testers are on the market. Operating procedures may vary on different testers. Therefore, you must follow the operating directions furnished with a tester to check or troubleshoot a circuit accurately.

b. *Improper Operation.* When a hydraulic system does not operate properly, the trouble could be one of the following:

- The pump that propels the fluid may be slipping because of a worn or an improperly set spring in the relief valve.
- The fluid may be leaking around the control valves or past the cylinder packing.

Since hydraulic systems are confined, it is difficult to identify which component in a system is not working properly. Measure the flow, pressure, and temperature of a liquid at given points in a system to isolate the malfunctioning unit. If this does not work, take the system apart and check each unit for worn parts or bad packing. This type of inspection can be costly from the standpoint of maintenance time and downtime of the power system.

2-9. Circulatory Systems. Pipes and fittings, with their necessary seals, make up a circulatory system of liquid-powered equipment. Properly selecting and installing these components are very important. If improperly selected or installed, the result would be serious power loss or harmful liquid contamination. The following is a list of some of the basic requirements of a circulatory system:

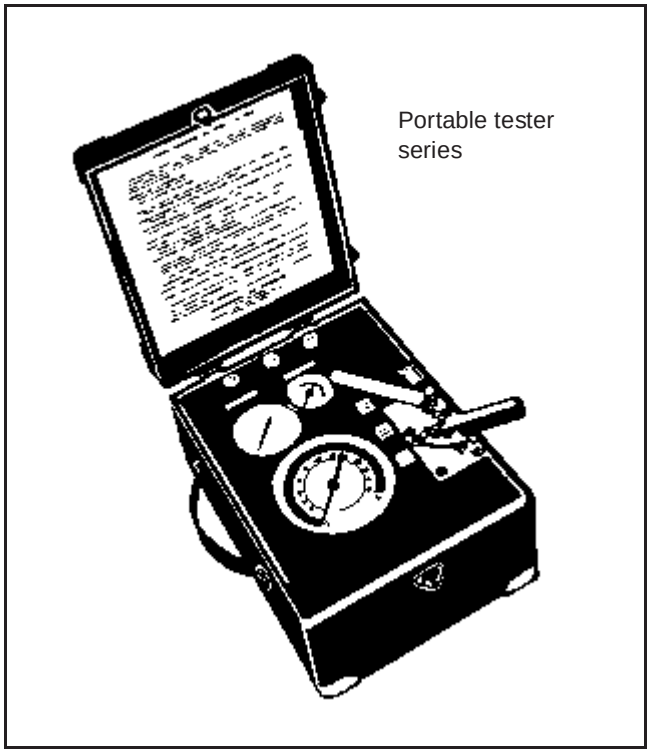

Figure 2-20. Portable hydraulic-circuit tester

- Lines must be strong enough to contain s liquid at s desired working pressure and the surges in pressure that may develop in s system.
- Lines must be strong enough to support the components that are mounted on them.
- Terminal fittings must be at all junctions where parts must be removed for repair or replacement.
- Line supports must be capable of damping the shock caused by pressure surges.
- Lines should have smooth interiors to reduce turbulent flow.
- Lines must have the correct size for the required liquid flow.

- Lines must be kept clean by regular flushing or purging.
- Sources of contaminants must be eliminated.

The three common types of lines in liquid-powered systems are pipes, tubing, and flexible hose, which are also referred to as rigid, semirigid, and flexible line.

a. *Tubing.* The two types of tubing used for hydraulic lines are seamless and electric welded. Both are suitable for hydraulic systems. Seamless tubing is made in larger sizes than tubing that is electric welded. Seamless tubing is flared and fitted with threaded compression fittings. Tubing bends easily, so fewer pieces and fittings are required. Unlike pipe, tubing can be cut and flared and fitted in the field. Generally, tubing makes a neater, less costly, lower-maintenance system with fewer flow restrictions and less chances of leakage. Figure 2-21 shows the proper method of installing tubing.

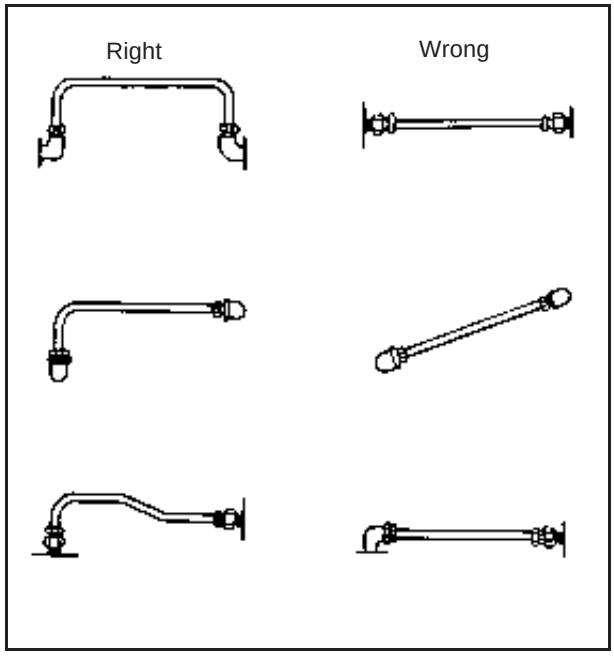

Figure 2-21. Method of installing tubing

Knowing the flow, type of fluid, fluid velocity, and system pressure will help determine the type of tubing to use. (Nominal dimensions of tubing are given as fractions in inches or as *dash numbers*. A dash number represents a tube's outside diameter [OD] in sixteenths of an inch.) A system's pressure determines the thickness of the various tubing walls. Tubing above 1/2 inch OD usually is installed with either flange fittings with metal or pressure seals or with welded joints. If joints are welded, they should be stress-relieved.

b. *Piping.* You can use piping that is threaded with screwed fittings with diameters up to 1 1/4 inches and pressures of up to 1,000 psi. Where pressures will exceed 1,000 psi and required diameters are over 1 1/4 inches, piping with welded, flanged connections and socket-welded size are specified by nominal inside diameter (ID) dimensions. The thread remains the same for any given pipe size regardless of wall thickness. Piping is used economically in larger-sized hydraulic systems where large flow is carried. It is particularly suited for long, permanent straight lines. Piping is taper-threaded on its OD into a tapped hole or fitting. However, it cannot be bent. Instead, fittings are used wherever a joint is required. This results in additional costs and an increased chance of leakage.

c. *Flexible Hosing.* When flexibility is necessary in liquid-powered systems, use hose. Examples would be connections to units that move while in operation to units that are attached to a hinged portion of the equipment or are in locations that are subjected to severe vibration. Flexible hose is usually used to connect a pump to a system. The vibration that is set up by an operating pump would ultimately cause rigid tubing to fail.

(1) Rubber Hose. Rubber hose is a flexible hose that consists of a seamless, synthetic rubber tube covered with layers of cotton braid and wire braid. Figure 2-22, page 2-20, shows cut-away views of typical rubber hose. An inner tube is designed to withstand material

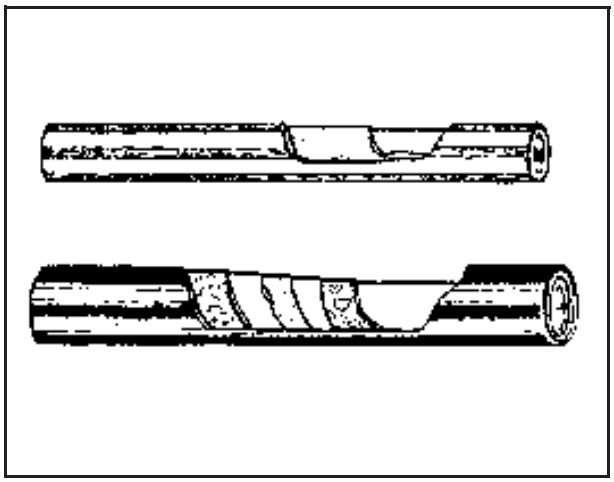

Figure 2-22. Flexible rubber hose

passing through it. A braid, which may consist of several layers, is the determining factor in the strength of a hose. A cover is designed to withstand external abuse.

When installing flexible hose, do not twist it. Doing so reduces its lift and may cause its fittings to loosen. An identification stripe that runs along the hose length should not spiral, which would indicate twisting (Figure 2-23). Protect flexible hose from chafing by wrapping it lightly with tape, when necessary.

The minimum bend radius for flexible hose varies according to its size and construction and the pressure under which a system will operate. Consult the applicable publications that contain the tables and graphs which show the minimum bend radii for the different types of installations. Bends that are too sharp will reduce the bursting pressure of flexible hose considerably below its rated value.

Do not install flexible hose so that it will be subjected to a minimum of flexing during operation. Never stretch hose tightly between two fittings. When under pressure, flexible hose contracts in length and expands in diameter.

(2) Teflon™-Type Hose. This is a flexible hose that is designed to meet the requirements of higher operating pressures and temperatures in today's fluid-powered systems. The hose consists of a chemical resin that is processed and pulled into a desired-size tube

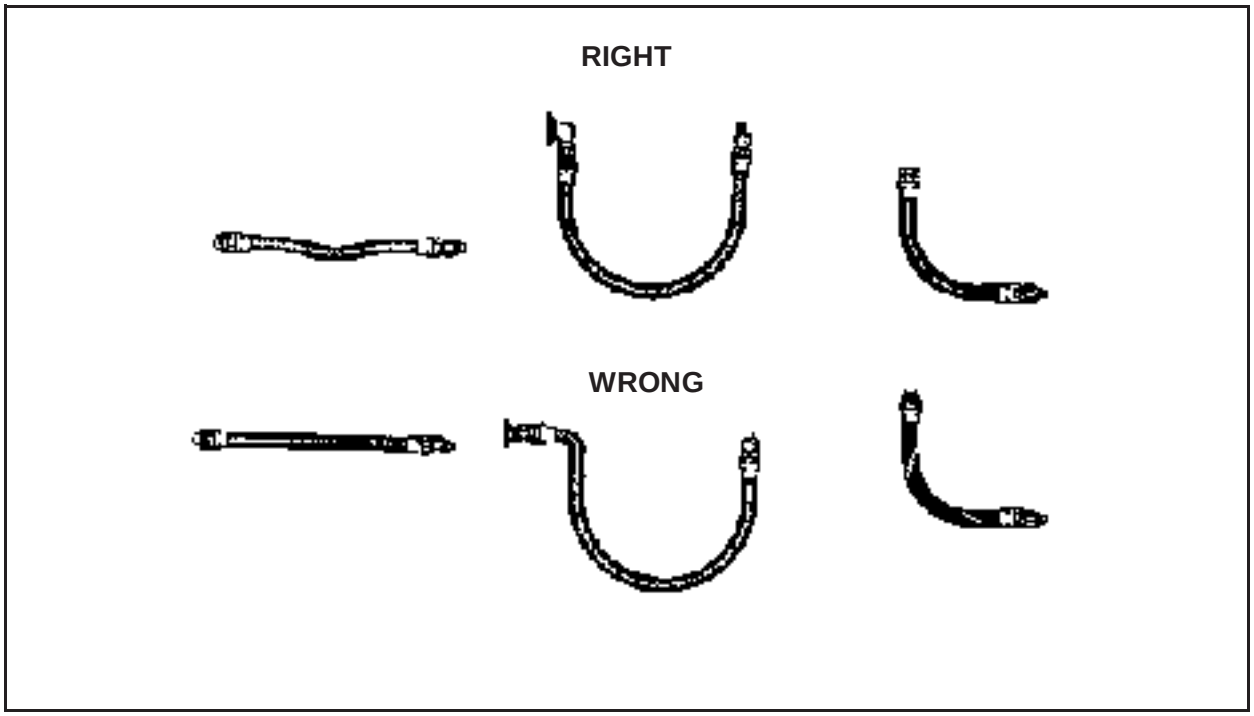

Figure 2-23. Installing flexible hose

shape. It is covered with stainless-steel wire that is braided over the tube for strength and protection. Teflon-type hose will not absorb moisture and is unaffected by all fluids used in today's fluid-powered systems. It is nonflammable; however, use an asbestos fire sleeve where the possibility of an open flame exists.

Carefully handle all Teflon-type hose during removal or installation. Sharp or excessive bending will kink or damage the hose. Also, the flexible-type hose tends to form itself to the installed position in a circulatory system.

d. *Installation*. Flaring and brazing are the most common methods of connecting tubing. Preparing a tube for installation usually involves cutting, flaring, and bending. After cutting a tube to the correct length, cut it squarely and carefully remove any internal or external burrs.

If you use flare-type fittings, you must flare the tube. A flare angle should extend 37 degrees on each side of the center line. The area's outer edge should extend beyond the maximum sleeve's ID but not its OD. Flares that are too short are likely to be squeezed thin, which could result in leaks or breaks. Flares that are too long will stick or jam during assembly.

Keep the lines as short and free of bends as possible. However, bends are preferred to elbows or sharp turns. Try not to assemble the tubing in a straight line because a bend tends to eliminate strain by absorbing vibration and compensating for temperature expansion and contraction.

Install all the lines so you can remove them without dismantling a circuit's components or without bending or springing them to a bad angle. Add supports to the lines at frequent intervals to minimize vibration or movement; never weld the lines to the supports. Since flexible hose has a tendency to shorten when subjected to pressure, allow enough slack to compensate for this problem.

Keep all the pipes, tubes, or fittings clean and free from scale and other foreign matter. Clean iron or steel pipes, tubes, and fittings with a boiler-tube wire brush or with commercial pipe-cleaning equipment. Remove rust and scale from short, straight pieces by sandblasting them, as long as no sand particles will remain lodged in blind holes or pockets after you flush a piece. In the case of long pieces or pieces bent to complex shapes, remove rust and scale by pickling (cleaning metal in a chemical bath). Cap and plug the open ends of the pipes, tubes, and fittings that will be stored for a long period. Do not use rags or waste for this purpose because they deposit harmful lint that can cause severe damage in a hydraulic system.

2-10. Fittings and Connectors. Fittings are used to connect the units of a fluid-powered system, including the individual sections of a circulatory system. Many different types of connectors are available for fluid-powered systems. The type that you will use will depend on the type of circulatory system (pipe, tubing, or flexible hose), the fluid medium, and the maximum operating pressure of a system. Some of the most common types of connectors are described below:

a. *Threaded Connectors*. Threaded connectors are used in some low-pressure liquid-powered systems. They are usually made of steel, copper, or brass, in a variety of designs (Figure 2-24, page 2-22). The connectors are made with standard female threading cut on the inside surface. The end of the pipe is threaded with outside (male) threads for connecting.

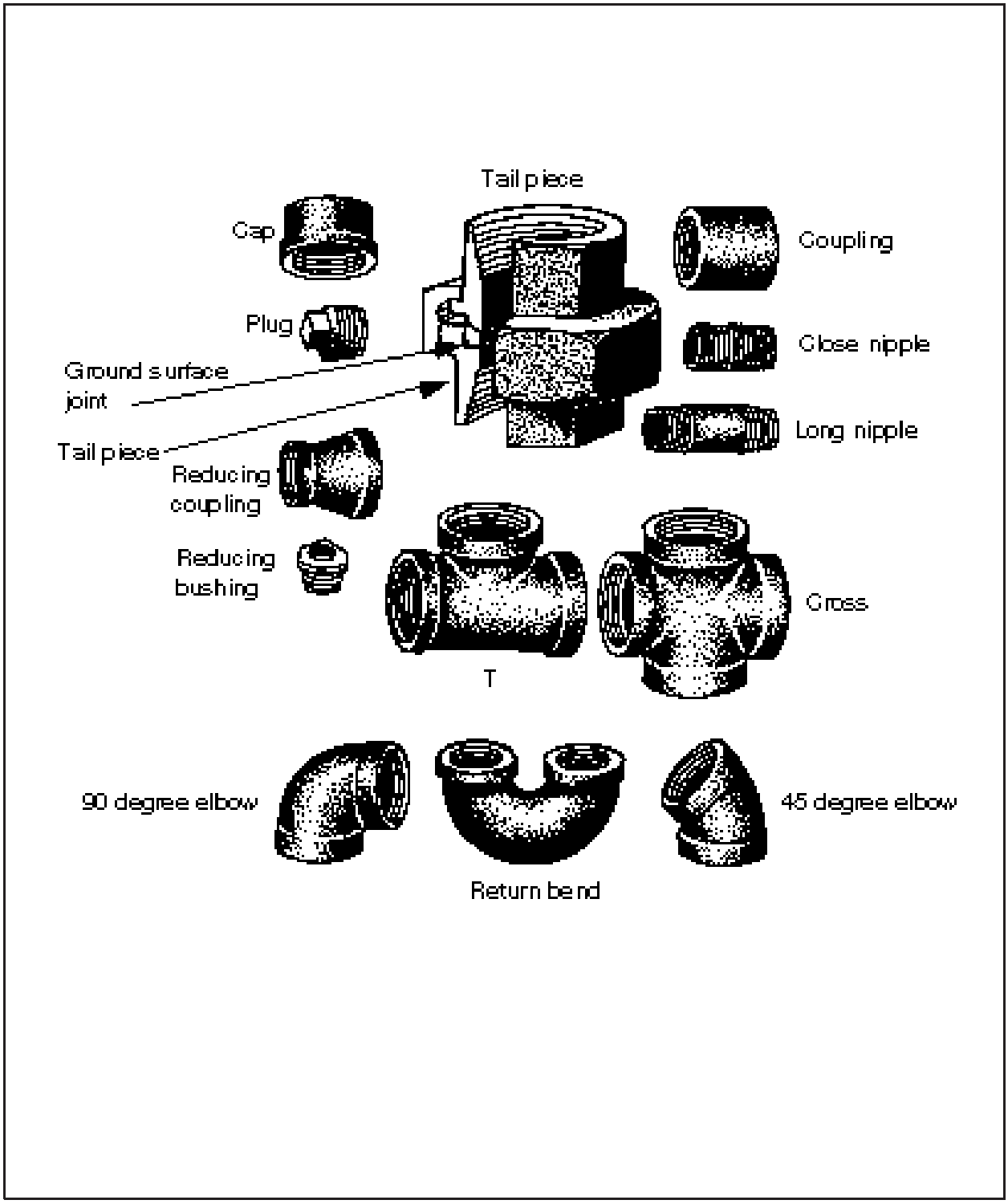

Figure 2-24. Threaded-pipe connectors

Standard pipe threads are tapered slightly to ensure tight connections.

To prevent seizing (threads sticking), apply a pipe-thread compound to the threads. Keep the two end threads free of the compound so that it will not contaminate the fluid. Pipe compound, when improperly applied, may get inside the lines and harm the pumps and the control equipment.

b. Flared Connectors. The common connectors used in circulatory systems consist of tube lines. These connectors provide safe, strong, dependable connections without having to thread, weld, or solder the tubing. A connector consists of a fitting, a sleeve, and a nut (see Figure 2-25).

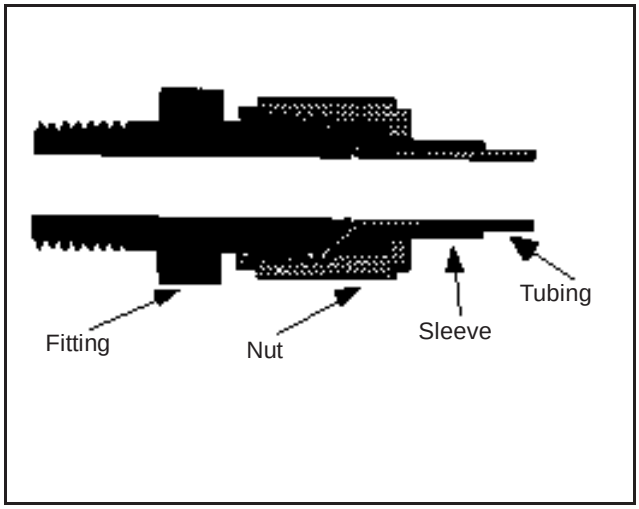

Figure 2-25. Flared-tube connector

Fittings are made of steel, aluminum alloy, or bronze. The fittings should be of a material that is similar to that of a sleeve, nut, and tubing. Fittings are made in unions, 45- and 90-degree elbows, *T*s, and various other shapes. Figure 2-26, page 2-24, shows some of the most common fittings used with flared connectors.

Fittings are available in many different thread combinations. Unions have tube connections on each end; elbows have tube connections on one end and a male pipe thread, female pipe thread, or a tube connection on the opposite end; crosses and *T*s have several different combinations.

Tubing used with flared connectors must be flared before being assembled. A nut fits over a sleeve and, when tightened, draws the sleeve and tubing flare tightly against a male fitting to form a seal. A male fitting has a cone-shaped surface with the same angle as the inside of a flare. A sleeve supports the tube so that vibration does not concentrate at the edge of a flare but that it does distribute the shearing action over a wider area for added strength. Tighten the tubing nuts with a torque wrench to the value specified in applicable regulations.

If an aluminum alloy flared connector leaks after tightening to the specified torque, do not tighten it further. Disassemble the leaking connector and correct the fault. If a steel connector leaks, you may tighten it 1/6 turn beyond the specified torque in an attempt to stop the leak. If you are unsuccessful, disassemble it and repair it.

Flared connectors will leak if—

- A flare is distorted into the nut threads.
- A sleeve is cracked.
- A flare is cracked or split.
- A flare is out-of-round.
- A flare is eccentric to the tube's OD.
- A flare's inside is rough or scratched.
- A fitting cone is rough or scratched.

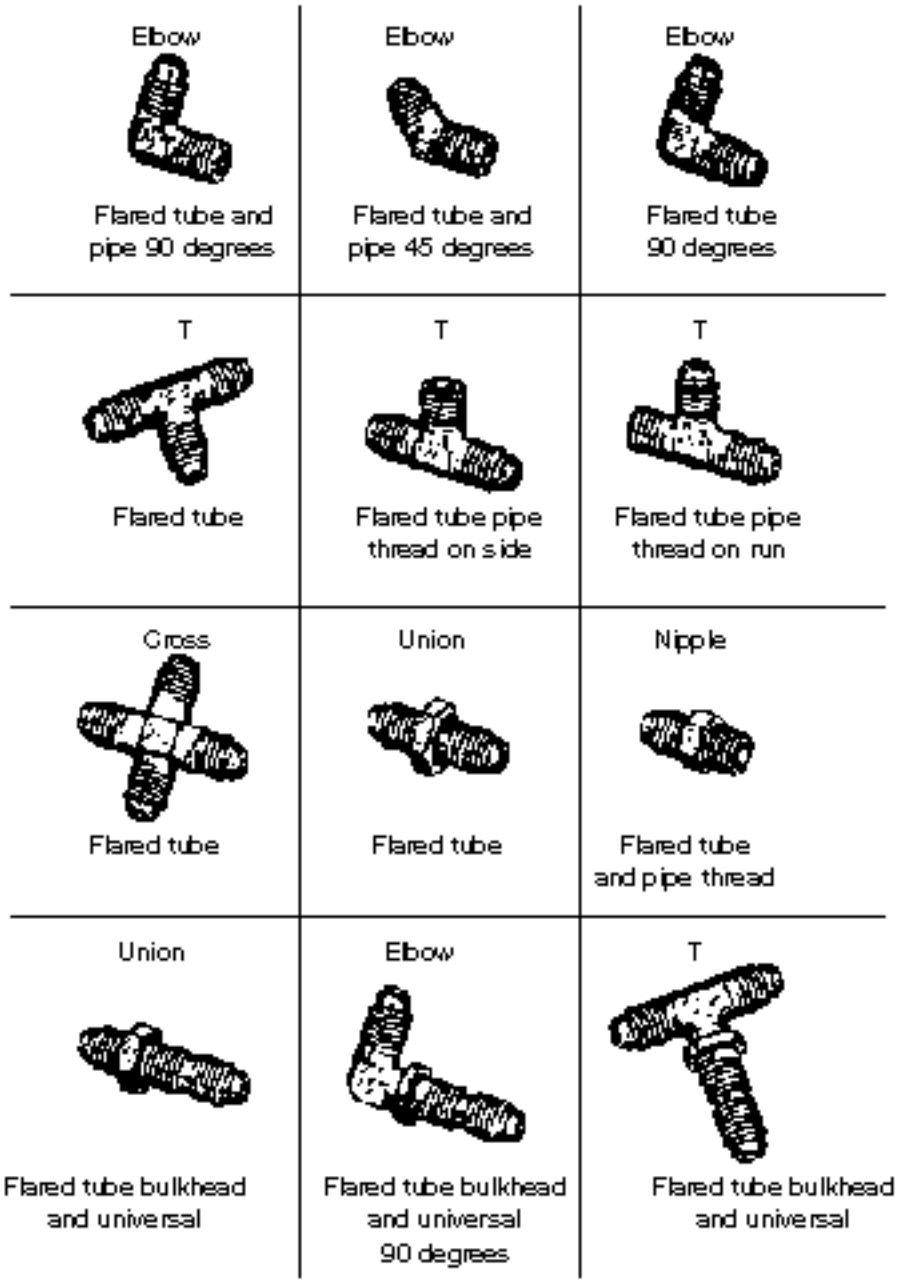

Figure 2-26. Flared-tube fittings

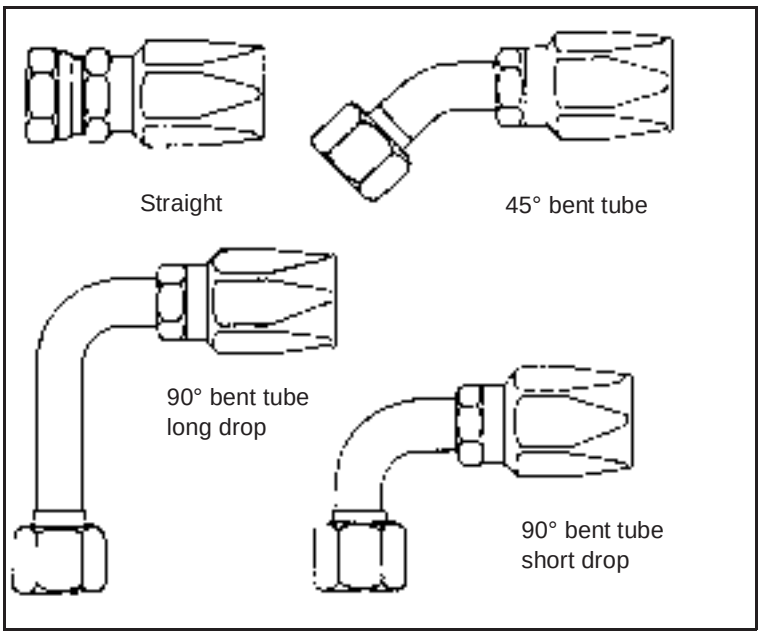

Figure 2-27. Field-attachable couplings

- The threads of a fitting or nut are dirty, damaged, or broken.

c. *Flexible-Hose Couplings.* If a hose assembly is fabricated with field attachable couplings (Figure 2-27), use the same couplings when fabricating the replacement assembly, as long as the failure (leak or break) did not occur at a coupling. If failure occurred at a coupling, discard it.

When measuring a replacement hose assembly for screw-on couplings, measure from the edge of a retaining bolt (Figure 2-28). Place the hose in hose blocks and then in a bench vice (Figure 2-29). Use the front or rear portion of a hacksaw blade for cutting. (If you use the middle portion of a blade, it could twist and break.) For effective cutting, a blade should have 24 or 32 teeth per inch. To remove an old coupling on a hose assembly that is fabricated with permanently attached couplings, you just discard the entire assembly (see Figure 2-30, page 2-26).

d. *Reusable Fittings.* To use a skived fitting (Figure 2-31, page 2-26), you must strip (skive) the hose to a length equal to that from a notch on a fitting to the end of the fitting. (A notch on a female portion of a fitting in Figure 2-31 indicates it to be a skived fitting.) To assemble a conductor using skived fittings—

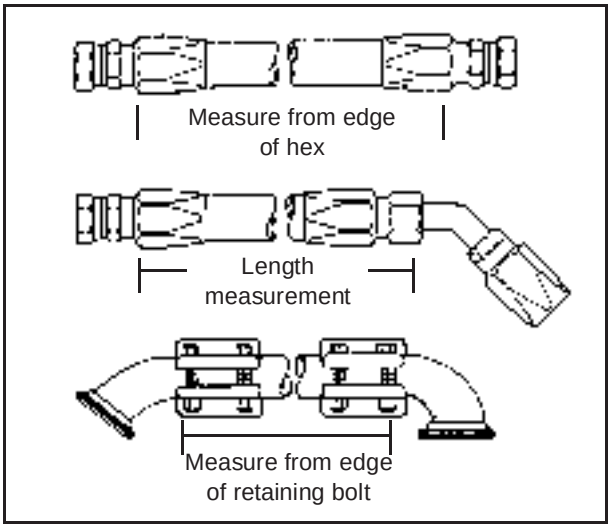

Figure 2-28. Hose-length measurement

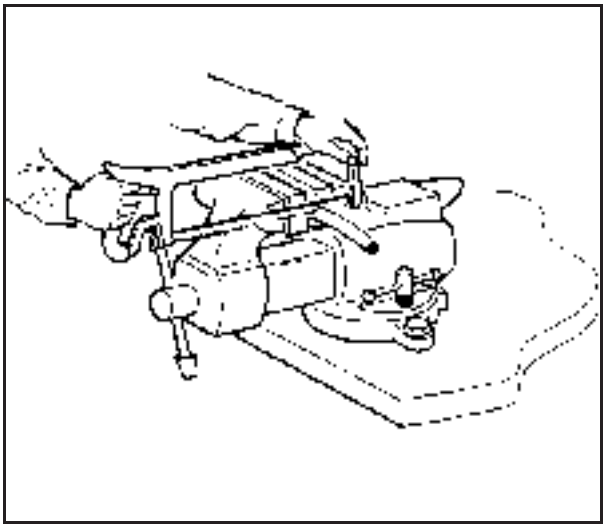

Figure 2-29. Hose cutting

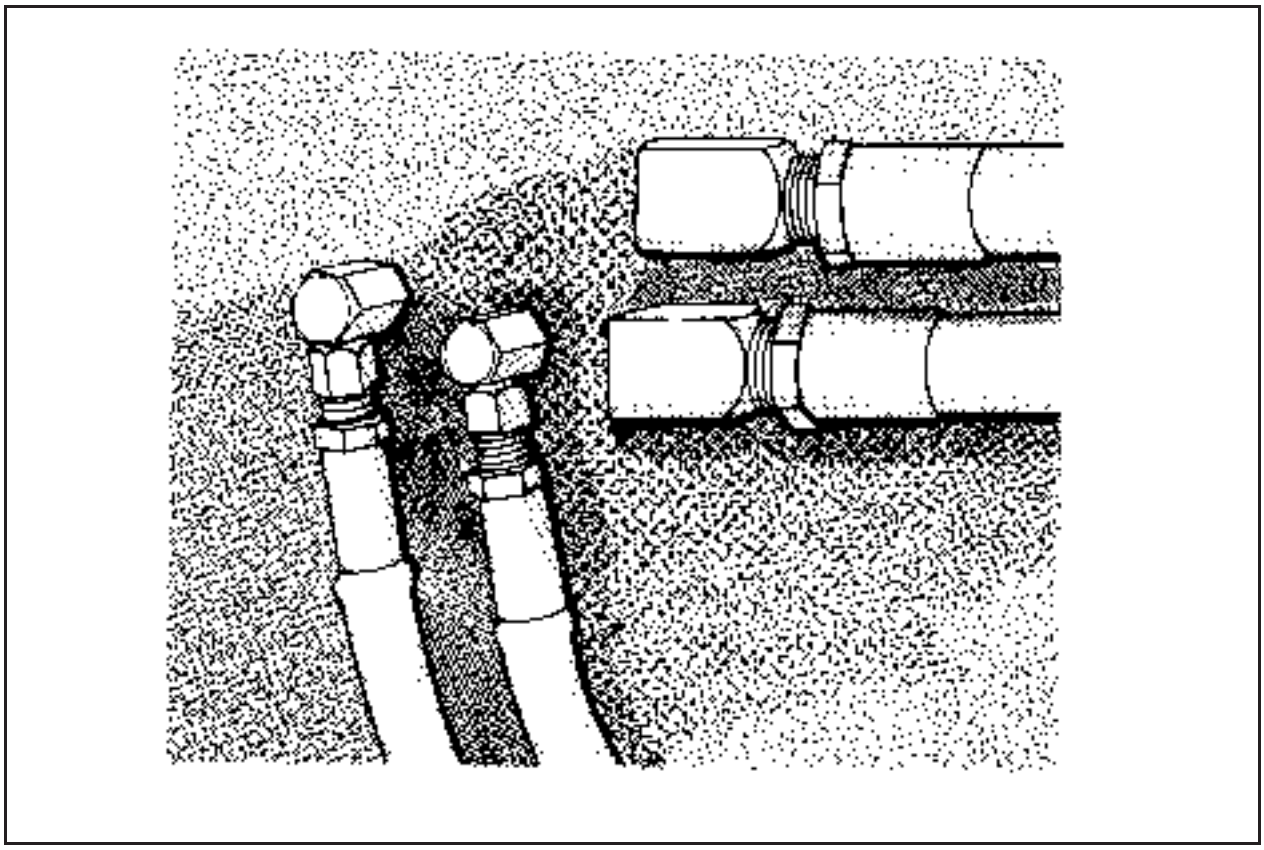

Figure 2-30. Permanently attached couplings

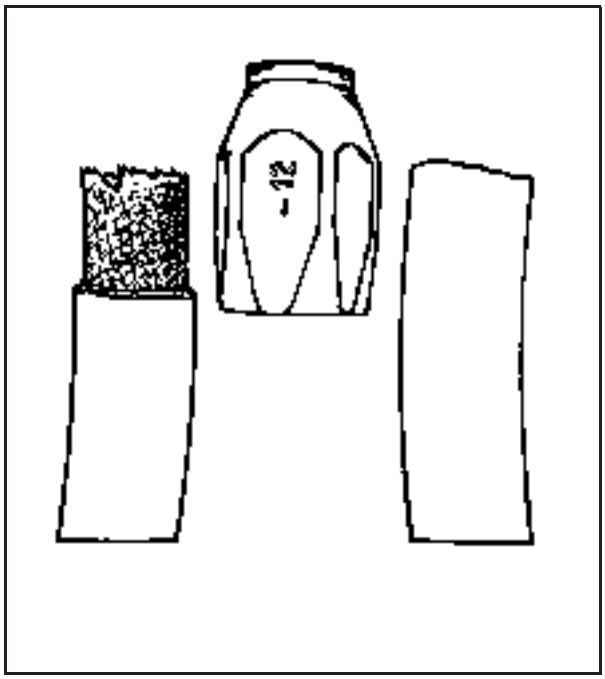

Figure 2-31. Skived fitting

- Determine the length of the skive.
- Make a cut around the hose with a sharp knife. Make sure that you cut completely through the rubber cover of the hose.
- Cut lengthwise to the end of the hose (Figure 2-32). Lift the hose flap and remove it with pliers.
- Repeat the process on the opposite end of the hose.
- Place the female portion of the fitting in a bench vice (Figure 2-33) and secure it in place.
- Lubricate the skived portion of the hose with hose lubricant (hydraulic fluid or engine oil, if necessary).
- Insert the hose into the female socket and turn the hose counterclockwise until it bottoms on the shoulder of the female socket, then back off 1/4 turn.
- Place the female socket in an upright position (Figure 2-34, page 3-28) and insert the male nipple into the female socket.
- Turn the male nipple clockwise (Figure 2-35, page 3-28) until the hex is within 1/32 inch of the female socket.
- Repeat the above process on the opposite end of the hose.

When assembling conductors using nonskived-type fittings, follow the above procedures. However, do not skive a hose. Nonskived fittings do not have a notch on the female portion of a fitting (Figure 2-36, page 2-28).

Figure 2-37, page 2-28, diagram A, shows a female hose coupling. One end of the hose has a spiral ridge (course thread) that provides a gripping action on the hose. The other end (small end) has machine threads into which the male, fixed or swivel nipple, is inserted.

Figure 2-37, diagram B shows the male adapter, and diagram C shows the male and the female swivel body. These fittings contain a fixed or swivel hex-nut connector on one end. The opposite end is tapered and has machine threads that mate with the threads in a female fitting. With a long taper inserted into a hose and screwed into a female coupling, the taper

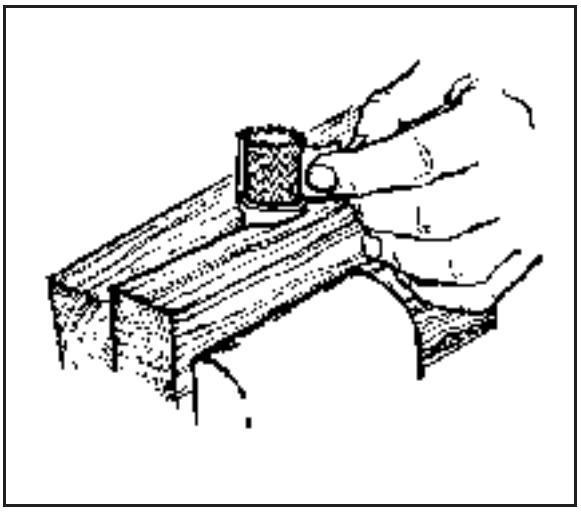

Figure 2-32. Trimming a hose

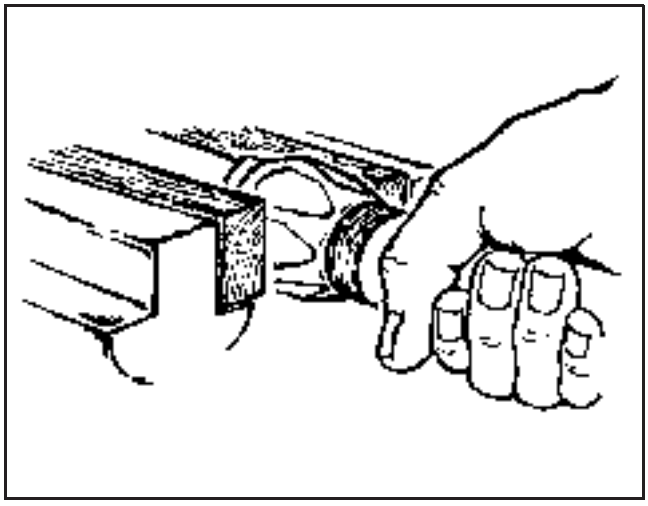

Figure 2-33. Female portion of a fitting

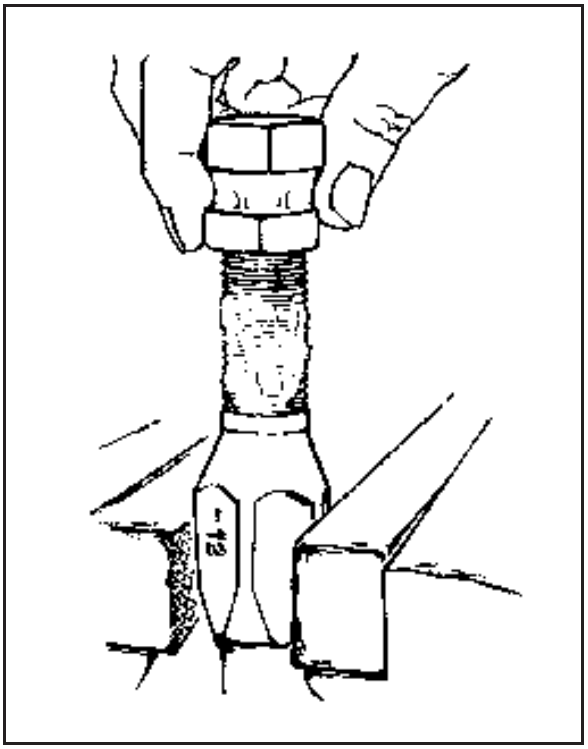

Figure 2-34. Male and female portions of a fitting

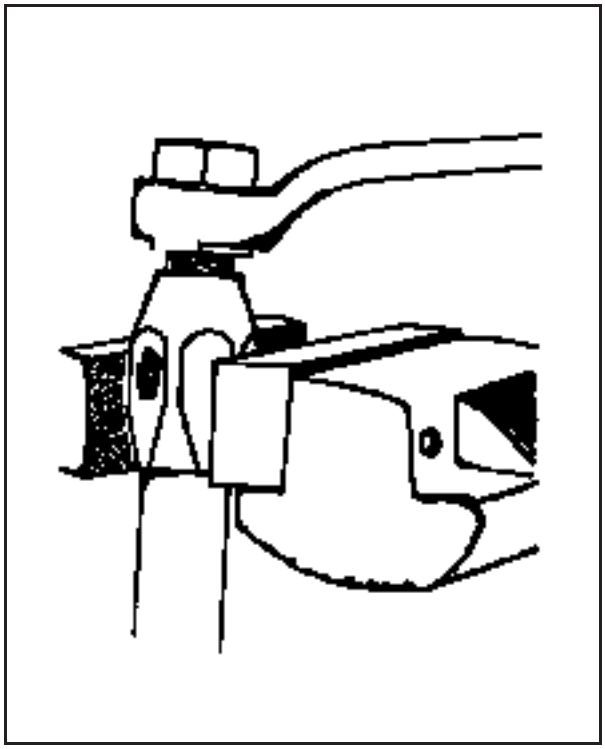

Figure 2-35. Tightening a fitting

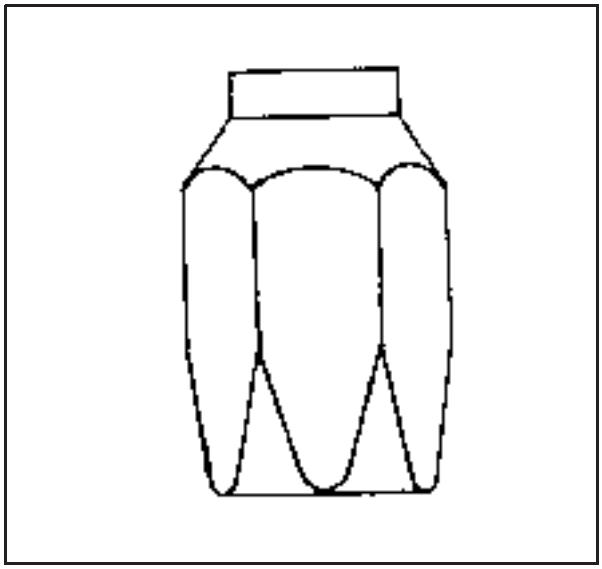

Figure 2-36. Nonskived fitting

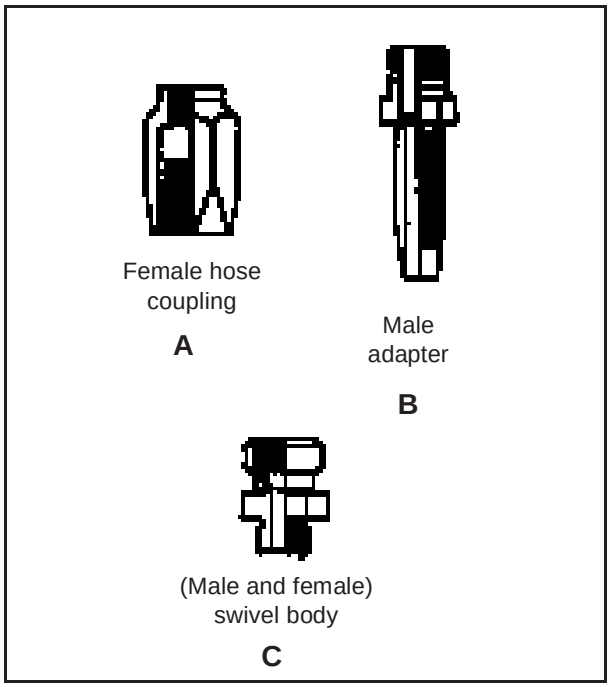

Figure 2-37. Fittings

tends to expand a hose, forcing it against the inside diameter of a female fitting.

Figure 2-38 shows the assembly of a clamp-type coupling. If you use this coupling, do not skive the hose. Lubricate the ID of a hose and the OD of a stem. Clamp a hose stem in a bench vice and install a hose. Turn the hose counterclockwise until it bottoms against the shoulder of the stem (Figure 2-38, diagram A). If you do not have a vice, force the stem into the hose by pushing or striking the stem with a wooden block. Place the clamp halves in position (Figure 2-38, diagram B) and draw them together with a vice or with extra long bolts until the standard bolts protrude far enough to grip the nuts. Remove the extra long bolts and place retaining bolts through the clamp. Tighten the nuts until you get the required torque (Figure 2-38, diagram C).

NOTE: You may have to retighten the bolts after the hose assembly has been operating about 10 to 20 hours. Use clamp-type couplings on hose assemblies with diameters of 1 inch or greater. Use reusable screw-type fittings on hose assemblies with diameters less than 1 inch.

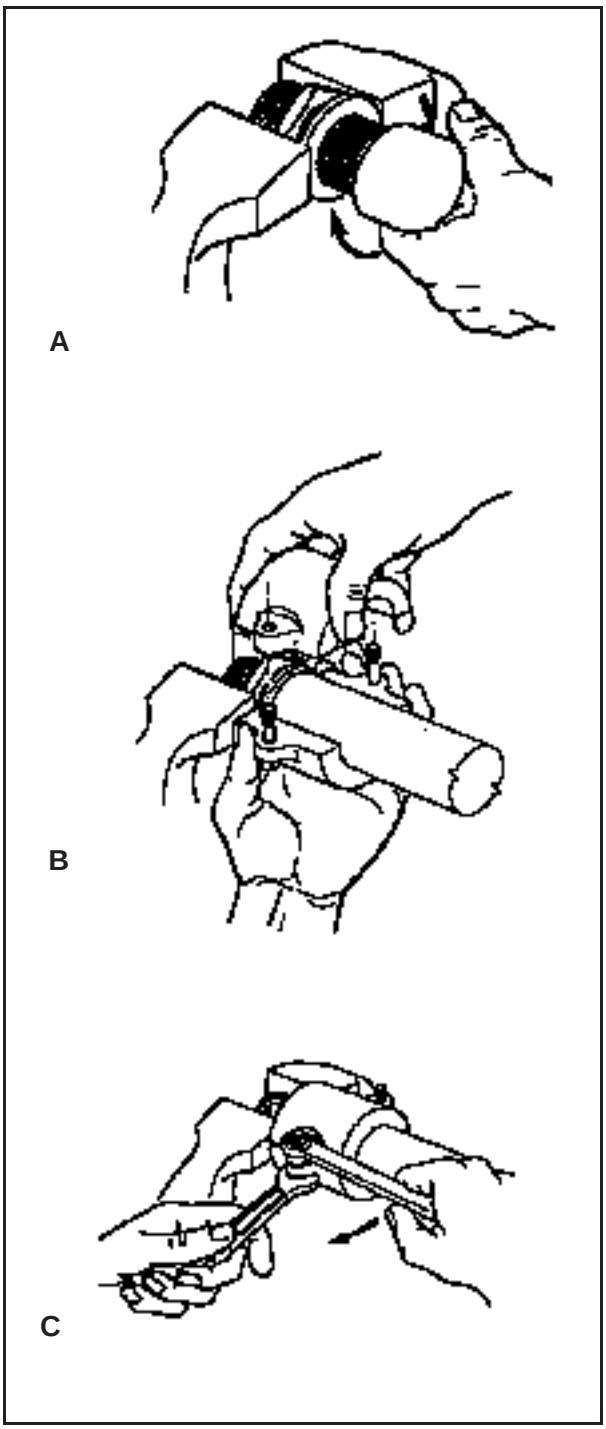

Figure 2-38. Assembly of clamp-type coupling

2-11. Leakage. Any hydraulic system will have a certain amount of leakage. Any leakage will reduce efficiency and cause power loss. Some leakage is built in (planned), some is not. Leakage may be internal, external, or both.

a. *Internal.* This type of leakage (nonpositive) must be built into hydraulic components to lubricate valve spools, shafts, pistons, bearings, pumping mechanisms, and other moving parts. In some hydraulic valves and pump and motor compensator controls, leakage paths are built in to provide precise control and to avoid hunting (oscillation) of spools and pistons. Oil is not lost in internal leakage; it returns to a reservoir through return lines or specially provided drain passages.

Too much internal leakage will slow down actuators. The power loss is accompanied by the heat generated at a leakage path. In some instances, excess leakage in a valve could cause a cylinder to drift or even creep when a valve is supposedly in neutral. In the case of

flow or pressure-control valves, leakage can often reduce effective control or even cause control to be lost.

Normal wear increases internal leakage, which provides larger flow paths for the leaking oil. An oil that is low in viscosity leaks more readily than a heavy oil. Therefore an oil's viscosity and viscosity index are important considerations in providing or preventing internal leakage. Internal leakage also increases with pressure, just as higher pressure causes a greater flow through an orifice. Operating above the recommended pressures adds the danger of excessive internal leakage and heat generation to other possible harmful effects.

A blown or ruptured internal seal can open a large enough leakage path to divert all of a pump's delivery. When this happens, everything except the oil flow and heat generation at a leakage point can stop.

b. *External*. External leakage can be hazardous, expensive, and unsightly. Faulty installation and poor maintenance are the prime causes of external leakage. Joints may leak because they were not put together properly or because shock and vibration in the lines shook them loose. Adding supports to the lines prevents this. If assembled and installed correctly, components seldom leak. However, failure to connect drain lines, excessive pressures, or contamination can cause seals to blow or be damaged, resulting in external leakage from the components.

c. *Prevention*. Proper installation, control of operating conditions, and proper maintenance help prevent leakage.

(1) Installation. Installing piping and tubing according to a manufacturer's recommendations will promote long life of external seals. Vibration or stresses that result from improper installation can shake loose connections and create puddles. Avoid pinching, cocking, or incorrectly installing seals when assembling the units. Use any special tools that the manufacturer recommends for installing the seals.

(2) Operating Conditions. To ensure correct seal life, you must control the operating conditions of the equipment. A shaft seal or piston-rod seal exposed to moisture, salt, dirt, or any other abrasive contaminate will have a shortened life span. Also, operators should always try to keep their loads within the recommended limits to prevent leakage caused by excessive pressures.

(3) Maintenance. Regular filter and oil changes, using a high-quality hydraulic oil, add to seal life. Using inferior oil could wear on a seal and interfere with desirable oil properties. Proper maintenance prevents impurity deposits and circulating ingredients that could wear on a dynamic seal.

Never use additives without approval from the equipment and oil suppliers. Lubrication can be critical to a seal's life in dynamic applications. Synthetics do not absorb much oil and must be lubricated quickly or they will rub. Leather and fiber do absorb oil. Manufacturers recommend soaking a seal overnight in oil before installing it. Do not install a seal dry. Always coat it in clean hydraulic oil before installing it.

2-12. Seals. Seals are packing materials used to prevent leaks in liquid-powered systems. A seal is any gasket, packing, seal ring, or other part designed specifically for sealing. Sealing applications are usually static or dynamic, depending if the parts being sealed move in relation to one another. Sealing keeps the hydraulic oil flowing in passages to hold pressure and keep foreign materials from getting into the hydraulic passages. To prevent leakage,

use a positive sealing method, which involves using actual sealing parts or materials. In most hydraulic components, you can use nonpositive sealing (leakage for lubrication) by fitting the parts closely together. The strength of an oil film that the parts slide against provides an effective seal.

a. *Static Seals.* Pipe-threaded seals, seal rings used with tube fittings, valve end-cap seals, and other seals on nonmoving parts are static seals. Mounting gaskets and seals are static, as are seals used in making connections between components. A static seal or gasket is placed between parts that do not move in relation to each other. Figure 2-39 shows some typical static seals in flanged connections.

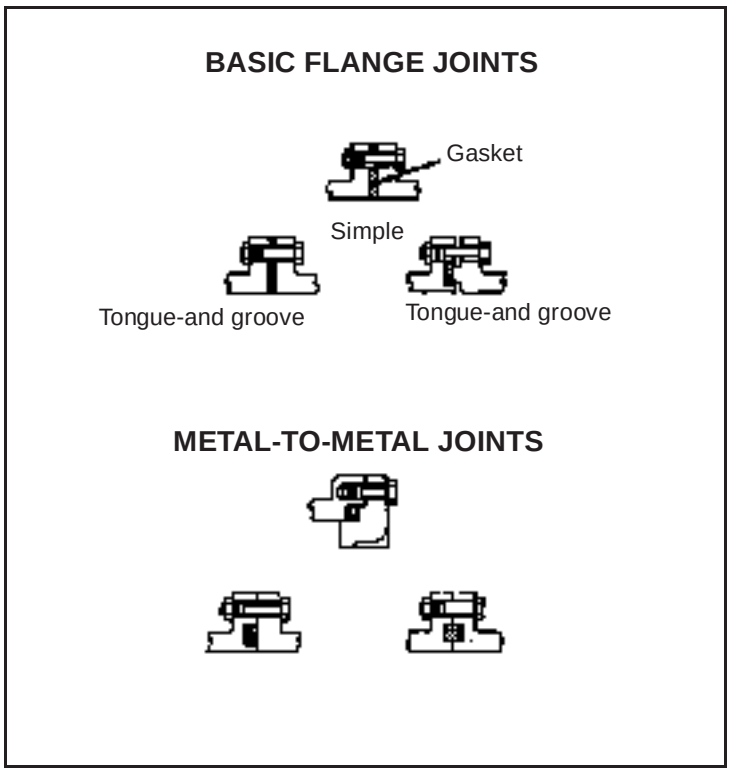

Figure 2-39. Static seals

b. *Dynamic Seals.* In a dynamic sealing application, either a reciprocating or a rotary motion occurs between the two parts being sealed; for example, a piston-to-barrel seal in a hydraulic cylinder or a drive-shaft seal in a pump or motor.

(1) *O*-Ring (Figure 2-40). An *O*-ring is a positive seal that is used in static and dynamic applications. It has replaced the flat gasket on hydraulic equipment. When being installed, an *O*-ring is squeezed at the top and bottom in its groove and against the mating part. It is capable of sealing very high pressure. Pressure forces the seal against the side of its groove, and the result is a positive seal on three sides. Dynamic applications of an *O*-ring are usually limited to reciprocating parts that have relatively short motion.

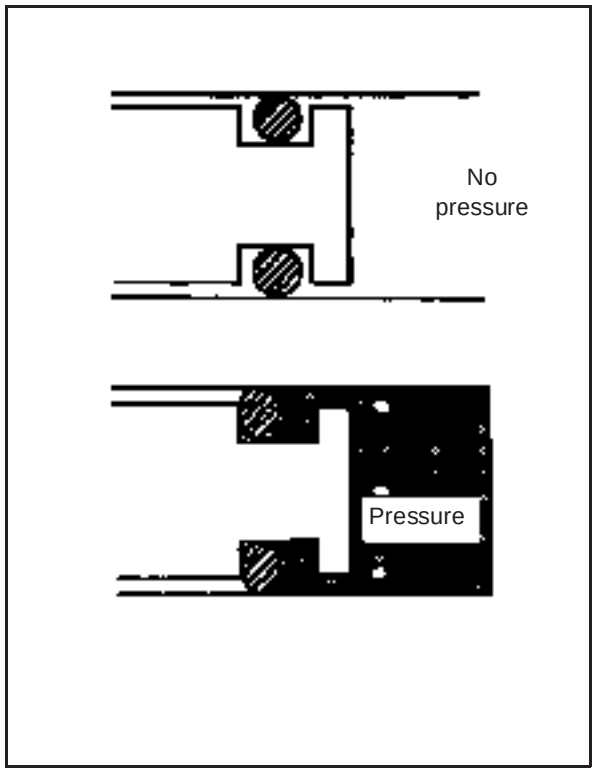

Figure 2-40. *O*-ring placement

To remove an *O*-ring seal, you need a special tool made of soft iron or aluminum or a brass rod (Figure 2-41, page 2-32). Make sure that the tool's edges are flat and that you polish any burrs and rough surfaces.

(2) Backup Ring (Figure 2-42, page 2-32). Usually, made of stiff nylon, you can use a backup ring with an *O*-ring so that it is not

forced into the space between the mating parts. A combination of high pressure and clearance between the parts could call for a backup ring.

(3) Lathe-Cut Seal. This seal is like an *O*-ring but is square in cross-section rather than round. A lathe-cut ring is cut from extruded tubes, while an *O*-ring must be individually molded. In many static applications, round- and square-section seals are interchangeable, if made from the same material.

(4) *T*-Ring Seal (Figure 2-43). This seal is reinforced with back-up rings on each side. A *T*-ring seal is used in reciprocating dynamic applications, particularly on cylinder pistons and around piston rods.

(5) Lip Seal (Figure 2-44). This a dynamic seal used mainly on rotating shafts. A sealing lip provides a positive seal against low pressure. A lip is installed toward the pressure source. Pressure against a lip balloons it out to aid in sealing. Very high pressure, however, can get past this kind of seal because it does not have the backup support that an *O*-ring has.

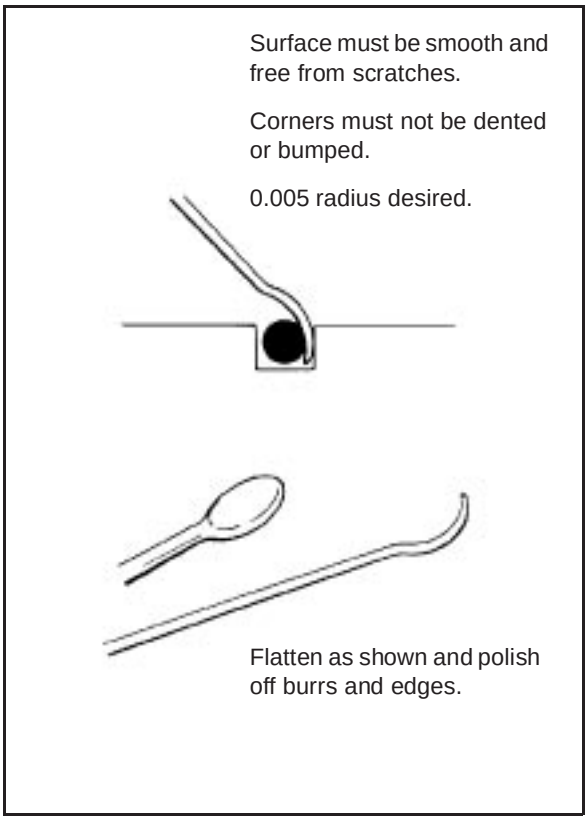

Figure 2-41. *O*-ring removal tool

Sometimes, double-lip seals are used on the shafts of reversible pumps or motors. Reversing a unit can give an alternating pressure and vacuum condition in the chamber adjacent to a seal. A double-lip seal, therefore, prevents oil from getting out or air and dirt from getting in.

(6) Cup Seal (Figure 2-45). This is a positive seal that is used on hydraulic cylinder pistons and seals much like a lip seal. A cup seal is backed up so that it can handle very high pressures.

(7) Piston Ring (Figure 2-46). A piston ring is used to seal pressure at the end of a reciprocating piston. It helps keep friction at a minimum in a hydraulic cylinder and offers less resistance to movement than a cup seal. A piston ring is used in many complex components and systems to seal fluid passages leading from hollow rotating

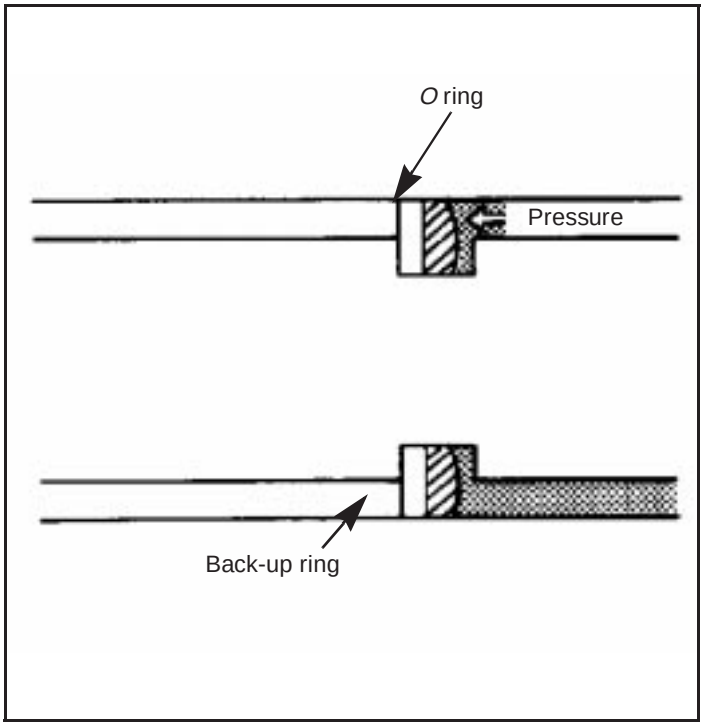

Figure 2-42. Backup ring

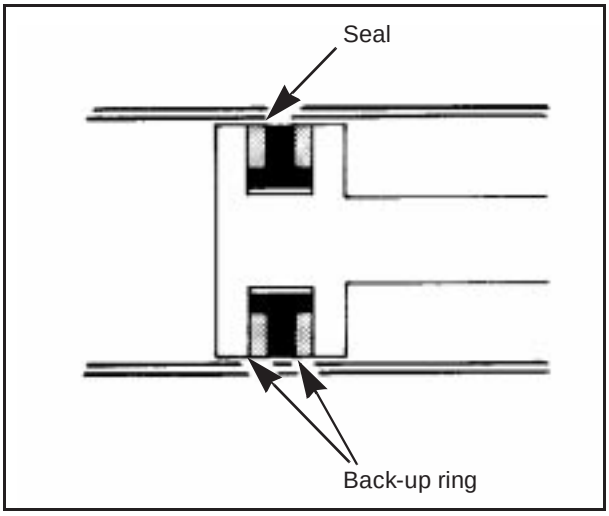

Figure 2-43. *T*-ring seal

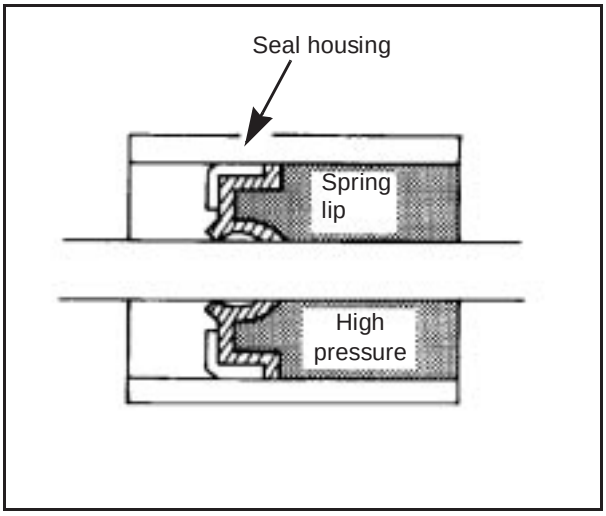

Figure 2-44. Lip seal

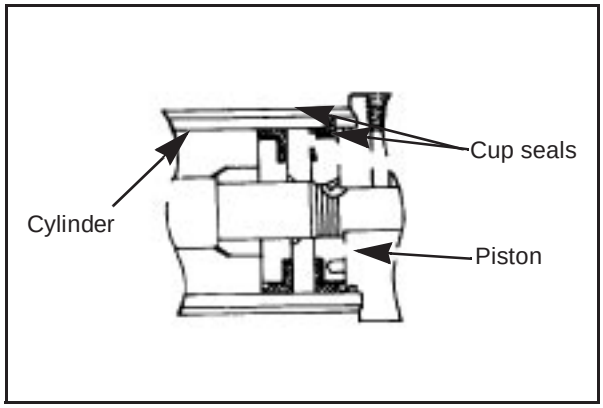

Figure 2-45. Cup seal

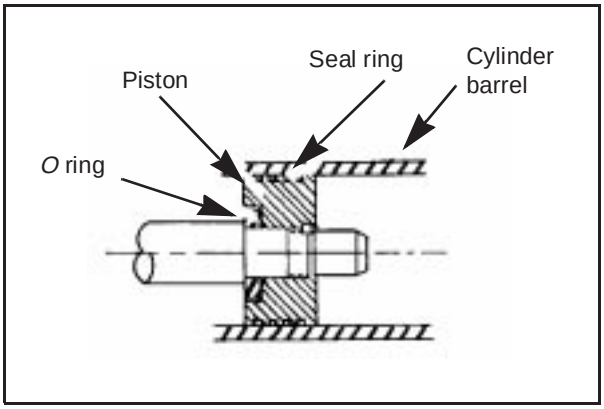

Figure 2-46. Piston ring

shafts. It is fine for high pressures but may not provide a positive seal. A positive seal is more likely to occur when piston rings are placed side by side. Often, a piston ring is designed to allow some leakage for lubrication.

(8) Face Seal (Figure 2-47, page 2-34). This seal has two smooth, flat elements that run together to seal a rotating shaft. One element is metallic and the other is nonmetallic. The elements are attached to a shaft and a body so that one face is stationary and the other turns against it. One element is often spring-loaded to take up wear. A face seal is used primarily when there is high speed, pressure, and temperature.

c. *Packing*. Packing is a type of twisted or woven fiber or soft metal strands that are packed between the two parts being sealed. A packing gland supports and backs up the packing. Packing (Figure 2-48) can be either static or dynamic. It has been and is used as a rotating shaft seal, a reciprocating piston-rod seal, and a gasket in many static applications. In static applications, a seal is replacing a packing. A compression packing is usually placed in a coil or layered in a bore and compressed by tightening a flanged member. A molded packing is molded into a precise cross-sectional form, such as a *U* or *V*. Several

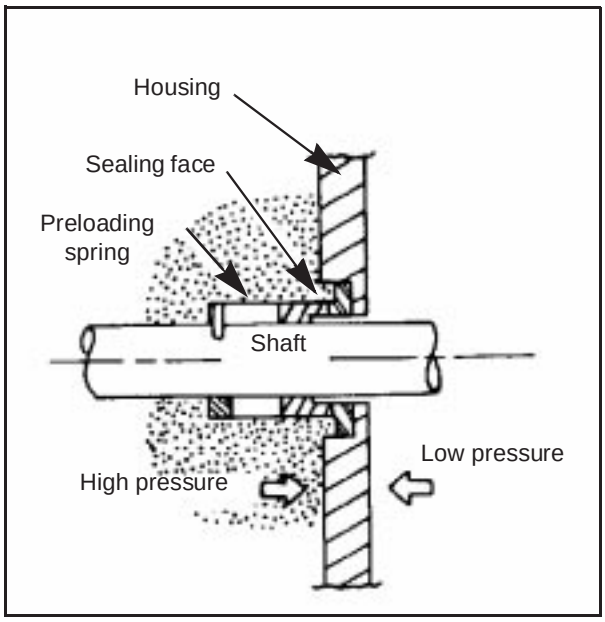

Figure 2-47. Face seal

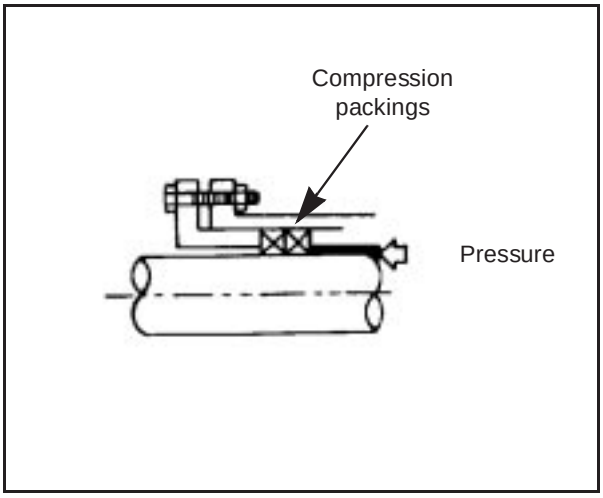

Figure 2-48. Compression packing

packings can be used together, with a backup that is spring-loaded to compensate for wear.

d. *Seal Materials.* The earliest sealing materials for hydraulic components were mainly leather, cork, and impregnated fibers. Currently, most sealing materials in a hydraulic system are made from synthetic materials such as nitrile, silicone, and neoprene.

(1) Leather Seals. Leather is still a good sealing material and has not been completely replaced by elastomers. It is tough, resists abrasion, and has the ability to hold lubricating fluids in its fibers. Impregnating leather with synthetic rubber improves the leather's sealing ability and reduces its friction. Leather's disadvantages are that it tends to squeal when it is dry, and it cannot stand high temperatures.

(2) Nitrile Seals. Nitrile is a comparatively tough material with excellent wearability. Its composition varies to be compatible with petroleum oils, and it can easily be molded into different seal shapes. Some nitrile seals can be used, without difficulty, in temperatures ranging from -40 degrees Fahrenheit to +230° F.

(3) Silicone Seals. Silicone is an elastomer that has a much wider temperature range than some nitrile seals have. Silicone cannot be used for reciprocating seals because it is not as tough. It tears, elongates, and abrades fairly easily. Many lip-type shaft seals made from silicone are used in extreme temperature applications. Silicone *O*-rings are used for static applications. Silicone has a tendency to swell since it absorbs a fair volume of oil while running hot. This is an advantage, if the swelling is not objectionable, because a seal can run dry for a longer time at start-up.

(4) Neoprene. At very low temperatures, neoprene is compatible with petroleum oil. Above 150 degrees, it has a habit of cooking or vulcanizing, making it less useful.

(5) Nylon. Nylon is a plastic (also known as fluoro-elastomer) that combines fluorine with a synthetic rubber. It is used for backup rings, has sealing materials in special applications, and has a very high heat resistance.

CHAPTER 3

Pumps

Hydraulic pumps convert mechanical energy from a prime mover (engine or electric motor) into hydraulic (pressure) energy. The pressure energy is used then to operate an actuator. Pumps push on a hydraulic fluid and create flow.

3-1. Pump Classifications. All pumps create flow. They operate on the displacement principle. Fluid is taken in and displaced to another point. Pumps that discharge liquid in a continuous flow are nonpositive-displacement type. Pumps that discharge volumes of liquid separated by periods of no discharge are positive-displacement type.

a. *Nonpositive-Displacement Pumps.* With this pump, the volume of liquid delivered for each cycle depends on the resistance offered to flow. A pump produces a force on the liquid that is constant for each particular speed of the pump. Resistance in a discharge line produces a force in the opposite direction. When these forces are equal, a liquid is in a state of equilibrium and does not flow.

If the outlet of a nonpositive-displacement pump is completely closed, the discharge pressure will rise to the maximum for a pump operating at a maximum speed. A pump will churn a liquid and produce heat. Figure 3-1 shows a nonpositive-displacement pump. A water wheel picks up the fluid and moves it.

b. *Positive-Displacement Pumps.* With this pump, a definite volume of liquid is delivered for each cycle of pump operation, regardless of resistance, as long as the capacity of the power unit driving a pump is not exceeded. If an outlet is completely closed, either the unit driving a pump will stall or something will break. Therefore, a positive-displacement-type pump requires a pressure regulator or pressure-relief valve in the system. Figure 3-2, page 3-2, shows a reciprocating-type, positive-displacement pump.

Figure 3-3, page 3-2, shows another positive-displacement pump. This pump not only creates flow, but it also backs it up. A sealed case around the gear traps the fluid and holds it while it moves. As the fluid flows out of the other side, it is sealed against backup. This sealing is the positive part of displacement. Without it, the fluid could never overcome the resistance of the other parts in a system.

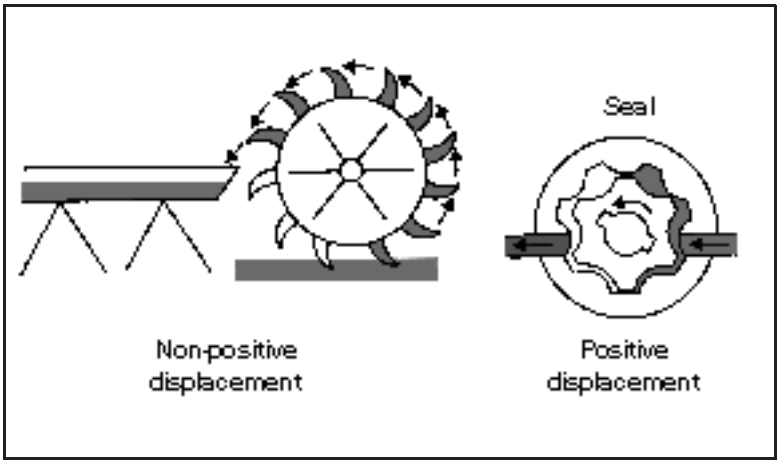

Figure 3-1. Nonpositive-displacement pump

c. *Characteristics.* The three contrasting characteristics in the

operation of positive- and nonpositive-displacement pumps are as follows:

- Nonpositive-displacement pumps provide a smooth, continuous flow; positive-displacement pumps have a pulse with each stroke or each time a pumping chamber opens to an outlet port.
- Pressure can reduce a nonpositive pump's delivery. High outlet pressure can stop any output; the liquid simply recirculates inside the pump. In a positive-displacement pump, pressure affects the output only to the extent that it increases internal leakage.
- Nonpositive-displacement pumps, with the inlets and outlets connected hydraulically, cannot create a vacuum sufficient for self-priming; they must be started with the inlet line full of liquid and free of air. Positive-displacement pumps often are self-priming when started properly.

3-2. Performance. Pumps are usually rated according to their volumetric output and pressure. Volumetric output (delivery rate or capacity) is the amount of liquid that a pump can deliver at its outlet port per unit of time at a given drive speed, usually expressed in GPM or cubic inches per minute. Because changes in pump drive affect volumetric output, pumps are sometimes rated according to displacement, that is the amount of liquid that they can deliver per cycle or cubic inches per revolution.

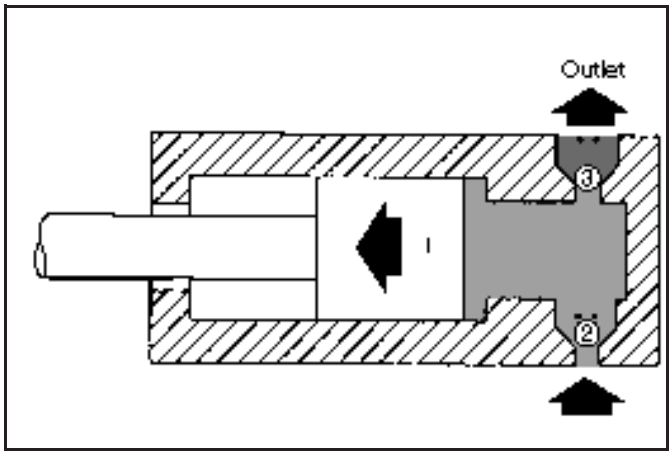

Figure 3-2. Reciprocating-type, positive-displacement pump

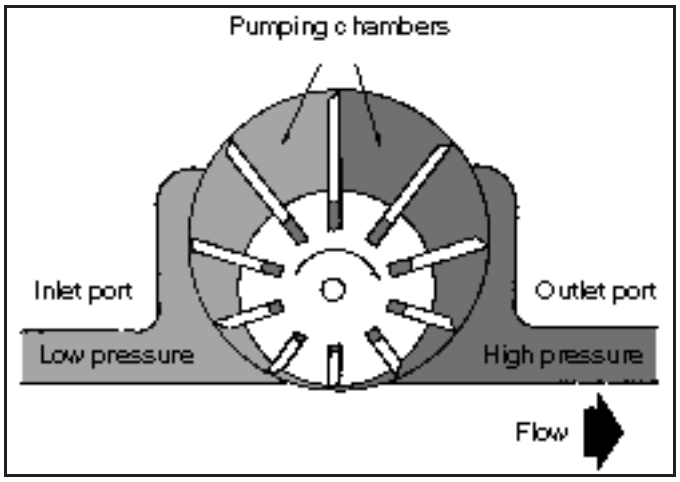

Figure 3-3. Positive-displacement pump

Pressure is the force per unit area of a liquid, usually expressed in psi. (Most of the pressure in the hydraulic systems covered in this manual is created by resistance to flow.) Resistance is usually caused by a restriction or obstruction in a path or flow. The pressure developed in a system has an effect on the volumetric output of the pump supplying flow to a system. As pressure increases, volumetric output decreases. This drop in output is caused by an increase in internal leakage (slippage) from a pump's outlet side to its inlet side. Slippage is a measure of a pump's efficiency and usually is expressed in percent. Some pumps have greater internal slippage than others; some pumps are rated in terms of volumetric output at a given pressure.

3-3. Displacement. Displacement is the amount of liquid transferred from a pump's inlet to its outlet in one revolution or cycle. In a rotary pump, displacement is expressed in cubic inches per revolution and in a reciprocating pump in cubic inches per cycle. If a pump has more than

one pumping chamber, its displacement is equal to the displacement of one chamber multiplied by the number of chambers. Displacement is either fixed or variable.

a. *Fixed-Displacement Pump.* In this pump, the GPM output can be changed only by varying the drive speed. The pump can be used in an open-center system—a pump's output has a free-flow path back to a reservoir in the neutral condition of a circuit.

b. *Variable-Displacement Pump.* In this pump, pumping-chamber sizes can be changed. The GPM delivery can be changed by moving the displacement control, changing the drive speed, or doing both. The pump can be used in a closed-center system—a pump continues to operate against a load in the neutral condition.

3-4. Slippage. Slippage is oil leaking from a pressure outlet to a low-pressure area or back to an inlet. A drain passage allows leaking oil to return to an inlet or a reservoir. Some slippage is designed into pumps for lubrication purposes. Slippage will increase with pressure and as a pump begins to wear. Oil flow through a given orifice size depends on the pressure drip. An internal leakage path is the same as an orifice. Therefore, if pressure increases, more flow will occur through a leakage path and less from an outlet port. Any increase in slippage is a loss of efficiency.

3-5. Designs. In most rotary hydraulic pumps (Figure 3-3), the design is such that the pumping chambers increase in size at the inlet, thereby creating a vacuum. The chambers then decrease in size at the outlet to push fluid into a system. The vacuum at the inlet is used to create a pressure difference so that fluid will flow from a reservoir to a pump. However, in many systems, an inlet is charged or supercharged; that is, a positive pressure rather than a vacuum is created by a pressurized reservoir, a head of fluid above the inlet, or even a low-pressure-charging pump. The essentials of any hydraulic pump are—

- A low-pressure inlet port, which carrys fluid from the reservoir.
- A high-pressure outlet port connected to the pressure line.
- Pumping chamber(s) to carry a fluid from the inlet to the outlet port.
- A mechanical means for activating the pumping chamber(s).

Pumps may be classified according to the specific design used to create the flow of a liquid. Most hydraulic pumps are either centrifugal, rotary, or reciprocating.

a. *Centrifugal Pump.* This pump generally is used where a large volume of flow is required at relatively low pressures. It can be connected in series by feeding an outlet of one pump into an inlet of another. With this arrangement, the pumps can develop flow against high pressures. A centrifugal pump is a nonpositive-displacement pump, and the two most common types are the volute and the diffuser.

(1) Volute Pump (Figure 3-4, page 3-4). This pump has a circular pumping chamber with a central inlet port (suction pipe) and an outlet port. A rotating impeller is located in a pumping chamber. A chamber between the casing and the center hub is the volute. Liquid enters a pumping chamber through a central inlet (or eye) and is trapped between the whirling impeller blades. Centrifugal force throws a liquid outward at a high velocity, and a contour of a casing directs a moving liquid through an outlet port.

(2) Diffuser Pump (Figure 3-5). Similar to a volute type, a diffuser pump has a series of stationary blades (the diffuser) that curve in the opposite direction from whirling impeller

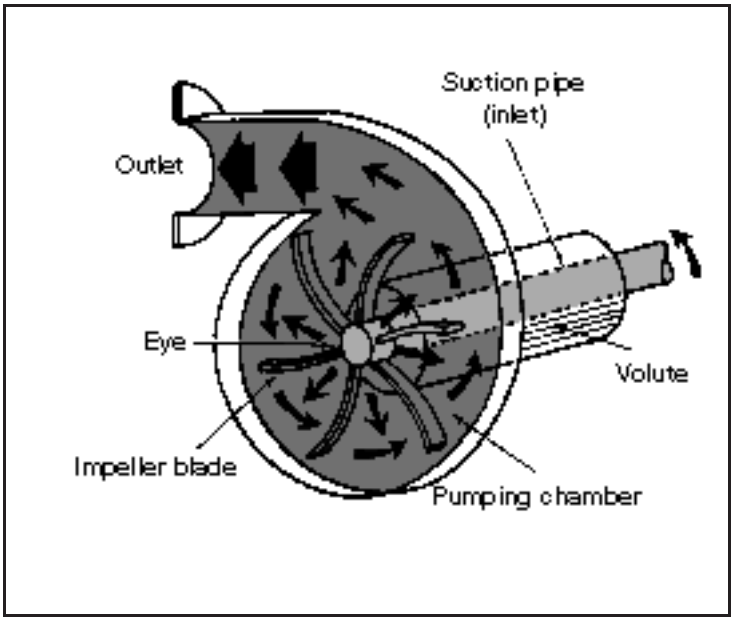

Figure 3-4. Volute pump

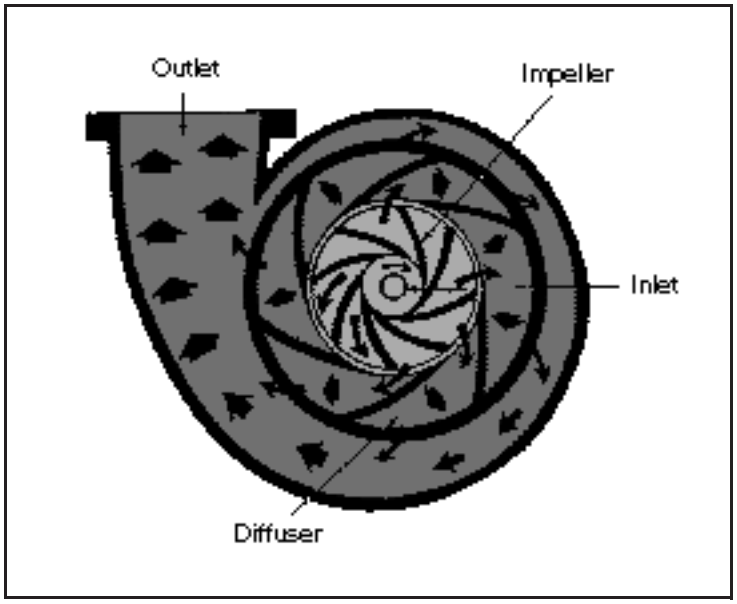

Figure 3-5. Diffuser pump

blades. A diffuser reduces the velocity of a liquid, decreases slippage, and increases a pump's ability to develop flow against resistance.

b. *Rotary Pump.* In this positive-displacement-type pump, a rotary motion carries a liquid from a pump's inlet to its outlet. A rotary pump is usually classified according to the type of element that actually transmits a liquid, that is, a gear-, vane-, or piston-type rotary pump.

c. *Reciprocating Pump.* A reciprocating pump depends on a reciprocating motion to transmit a liquid from a pump's inlet to its outlet. Figure 3-2, page 3-2, shows a simplified reciprocating pump. It consists of a cylinder that houses a reciprocating piston, Figure 3-2, 1; an inlet valve, Figure 3-2, 2; and an outlet valve, Figure 3-2, 3, which direct fluid to and from a cylinder. When a piston moves to the left, a partial vacuum that is created draws a ball off its seat, allowing a liquid to be drawn through an inlet valve into a cylinder. When a piston moves to the right, a ball reseats and closes an inlet valve. However, the force of a flow unseats a ball, allowing a fluid to be forced out of a cylinder through an outlet valve.

3-6. Gear Pumps. Gear pumps are external, internal, or lobe types.

a. *External.* Figure 3-6 shows the operating principle of an external gear pump. It consists of a driving gear and a driven gear enclosed in a closely fitted housing. The gears rotate in opposite directions and mesh at a point in the housing between the inlet and outlet ports. Both sets of teeth project outward from the center of the gears. As the teeth of the two gears separate, a partial vacuum forms and draws liquid through an inlet port into chamber A. Liquid in chamber A is trapped between the teeth of the two gears and the housing so that it is carried through two separate paths around to chamber B. As the teeth again mesh, they produce a force that drives a liquid through an outlet port.

b. *Internal.* Figure 3-7 shows an internal gear pump. The teeth of one gear project outward, while the teeth of the other gear project inward toward the center of the pump. One gear wheel stands inside the other. This type of gear can rotate, or be rotated by, a suitably constructed companion gear. An external gear is directly attached to the drive shaft of a pump and is placed off-center in relation to an internal gear. The two gears mesh on one side of a pump chamber, between an inlet and the discharge. On the opposite side of the chamber, a crescent-shaped form stands in the space between the two gears to provide a close tolerance.

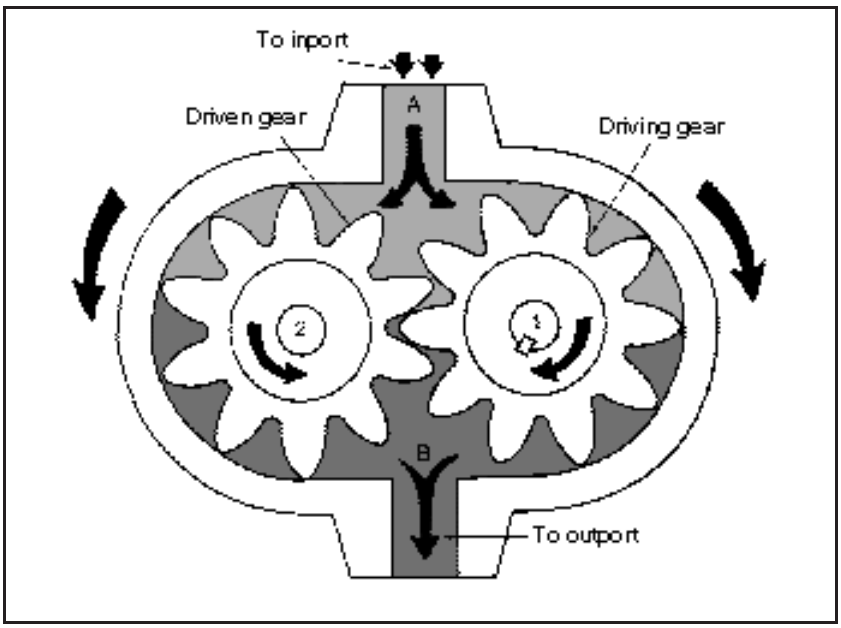

Figure 3-6. External gear pump

The rotation of the internal gear by a shaft causes the external gear to rotate, since the two are in mesh. Everything in the chamber rotates except the crescent, causing a liquid to be trapped in the gear spaces as they pass the crescent. Liquid is carried from an inlet to the discharge, where it is forced out of a pump by the gears meshing. As liquid is carried away

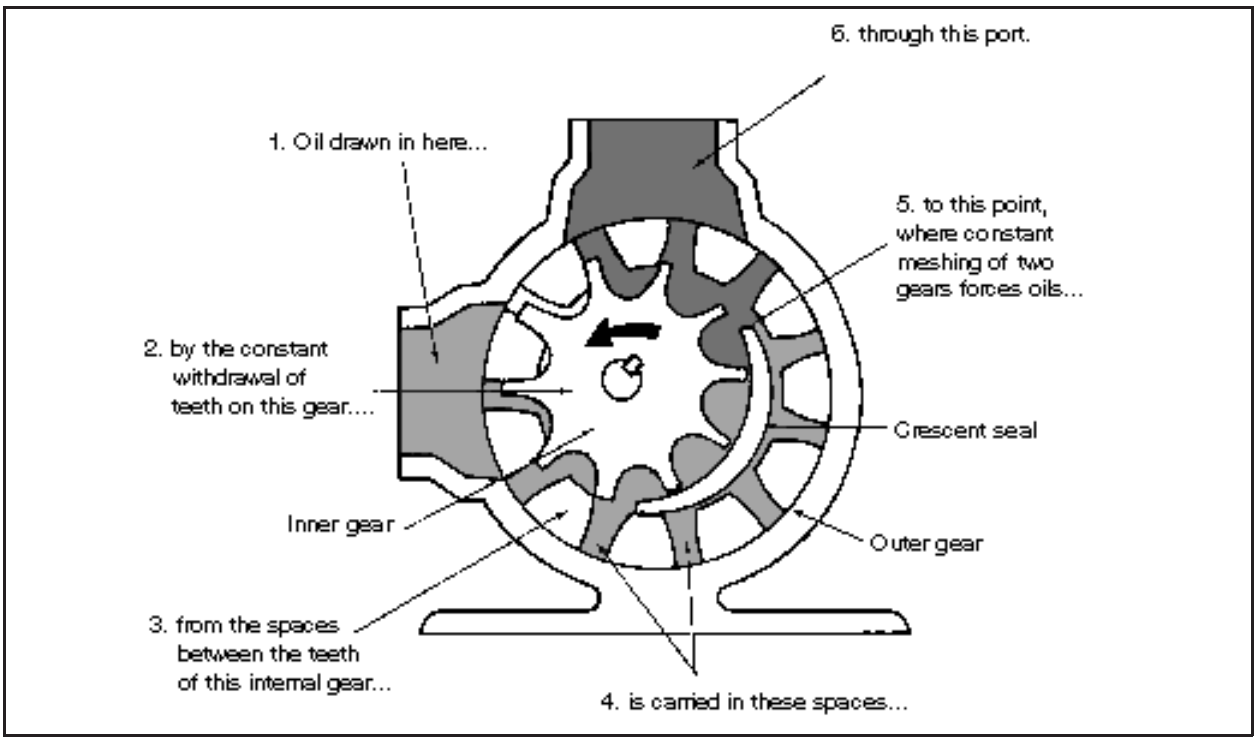

Figure 3-7. Internal gear pump

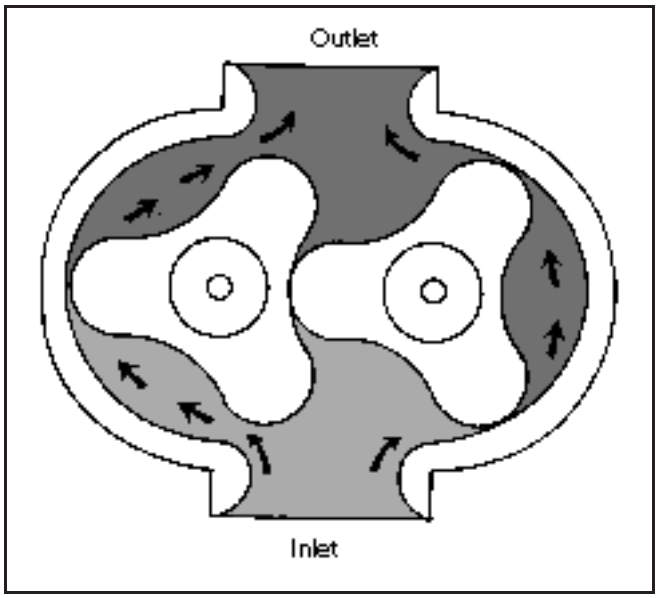

Figure 3-8. Lobe pump

from an inlet side of a pump, the pressure is diminished, and liquid is forced in from the supply source. The size of the crescent that separates the internal and external gears determines the volume delivery of this pump. A small crescent allows more volume of a liquid per revolution than a larger crescent.

c. *Lobe.* Figure 3-8 shows a lobe pump. It differs from other gear pumps because it uses lobed elements instead of gears. The element drive also differs in a lobe pump. In a gear pump, one gear drives the other. In a lobe pump, both elements are driven through suitable external gearing.

3-7. Vane Pumps. In a vane-type pump, a slotted rotor splined to a drive shaft rotates between closely fitted side plates that are inside of an elliptical- or circular-shaped ring. Polished, hardened vanes slide in and out of the rotor slots and follow the ring contour by centrifugal force. Pumping chambers are formed between succeeding vanes, carrying oil from the inlet to the outlet. A partial vacuum is created at the inlet as the space between vanes increases. The oil is squeezed out at the outlet as the pumping chamber's size decreases.

Because the normal wear points in a vane pump are the vane tips and a ring's surface, the vanes and ring are specially hardened and ground. A vane pump is the only design that has automatic wear compensation built in. As wear occurs, the vanes simply slide farther out of the rotor slots and continue to follow a ring's contour. Thus efficiency remains high throughout the life of the pump.

a. *Characteristics.* Displacement of a vane-type pump depends on the width of the ring and rotor and the throw of the cam ring. Interchangeable rings are designed so a basic pump converts to several displacements. Balanced design vane pumps all are fixed displacement. An unbalanced design can be built in either a fixed- or variable-displacement pump. Vane pumps have good efficiency and durability if operated in a clean system using the correct oil. They cover the low to medium-high pressure, capacity, and speed ranges. Package size in relation to output is small. A vane pump is generally quiet, but will whine at high speeds.

b. *Unbalanced Vane Pumps.* In the unbalanced design, (Figure 3-9), a cam ring's shape is a true circle that is on a different centerline from a rotor's. Pump displacement depends on how far a rotor and ring are eccentric. The advantage of a true-circle ring is that control can be applied to vary the eccentricity and thus vary the displacement. A disadvantage is that an unbalanced pressure at the outlet is effective against a small area of the rotor's edge, imposing side loads on the shaft. Thus there is a limit on a pump's size unless very large hearings and heavy supports are used.

c. *Balanced Vane Pumps.* In the balanced design (Figure 3-10), a pump has a stationary, elliptical cam ring and two sets of internal ports. A pumping chamber is formed

between any two vanes twice in each revolution. The two inlets and outlets are 180 degrees apart. Back pressures against the edges of a rotor cancel each other. Recent design improvements that allow high operating speeds and pressures have made this pump the most universal in the mobile-equipment field.

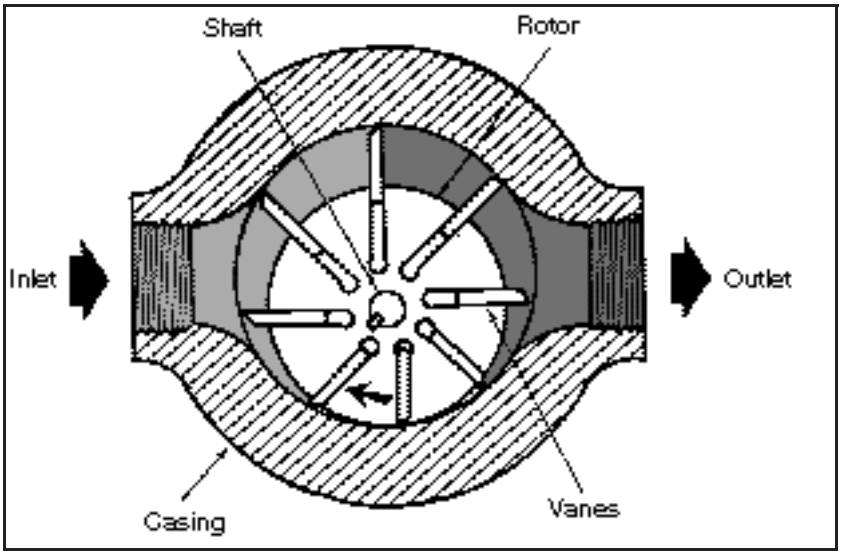

Figure 3-9. Unbalanced vane pump

d. *Double Pumps.* Vane-type double pumps (Figure 3-11, page 3-8) consist of two separate pumping devices. Each is contained in its own respective housing, mounted in tandem, and driven by a common shaft. Each pump also has its own inlet and outlet ports, which may be combined by using manifolds or piping. Design variations are available in which both cartridges are contained within one body. An additional pump is sometimes attached to the head end to supply auxiliary flow requirements.

Double pumps may be used to provide fluid flow for two separate circuits or combined for flow requirements for a single circuit. Combining pump deliveries does not alter the maximum pressure rating of either cartridge. Separate circuits require separate pressure controls to limit maximum pressure in each circuit.

Figure 3-12, page 3-8, shows an installation in which double pumps are used to provide fluid flow for operation of a cylinder in rapid advance and feed. In circuit B, two relief valves are used to control pumping operation. In circuit A, one relief valve and one unloading valve are used to control pumping operations. In both circuits, the deliveries of the pump cartridges are combined after passing through the valves. This combined flow is directed to a four-way valve and to the rest of the circuit.

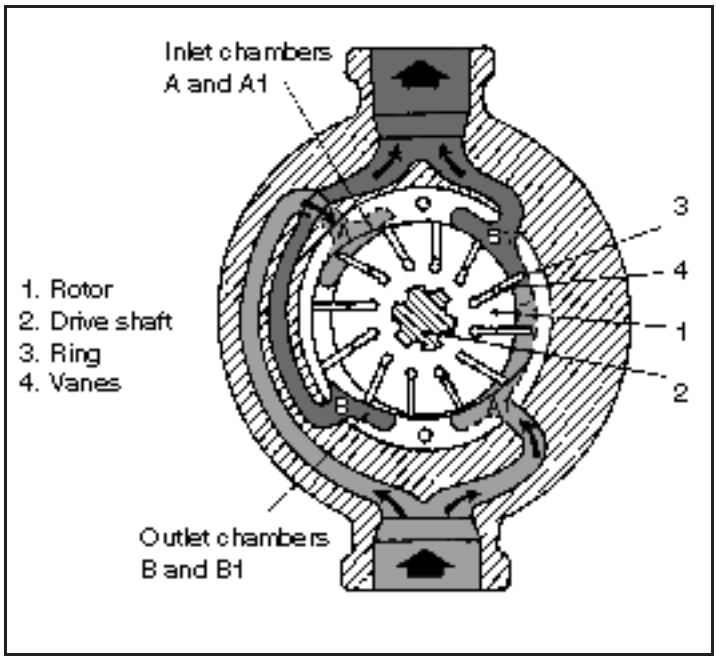

Figure 3-10. Balanced vane pump

In circuit B, an upper relief valve is vented when a cylinder rod reaches and trips a pilot valve. A vented relief valve directs the delivery of a shaft-end pump cartridge freely back to a tank. Another relief valve controls the maximum pressure of a circuit. An

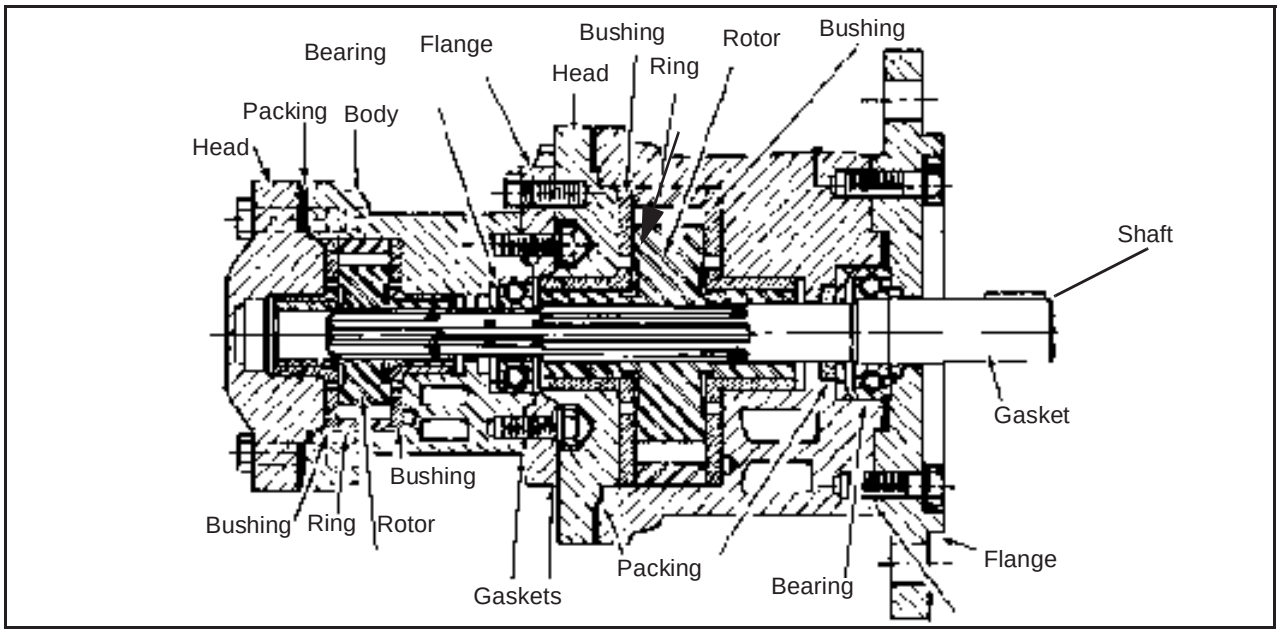

Figure 3-11. Vane-type double pump

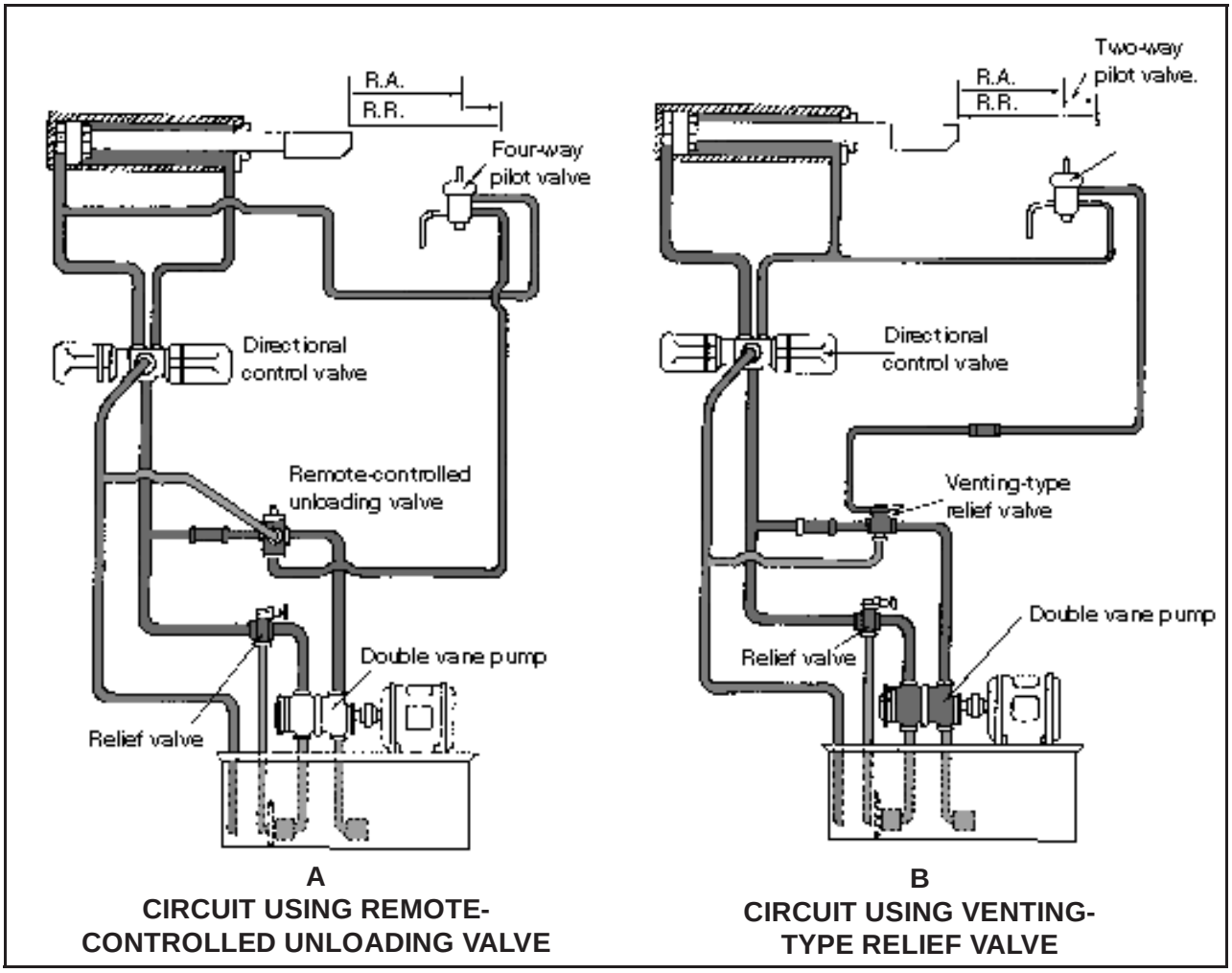

Figure 3-12. Fluid flow from vane-type double pumps

unloading valve and a relief valve in circuit A do the same operation. The output of both pump cartridges combines to supply fluid for a rapid advance portion of a cycle. When the output of one circuit returns to the tank, after reaching a certain point in the cycle, the other circuit completes the advance portion of a cycle. Both pump outputs are then combined for rapid return.

e. *Two-Stage Pumps.* Two-stage pumps consist of two separate pump assemblies contained in one housing. The pump assemblies are connected so that flow from the outlet of one is directed internally to the inlet of the other. Single inlet and outlet ports are used for system connections. In construction, the pumps consist of separate pumping cartridges driven by a common drive shaft contained in one housing. A dividing valve is used to equalize the pressure load on each stage and correct for minor flow differences from either cartridge.

In operation, developing fluid flow for each cartridge is the same as for single pumps. Figure 3-13 shows fluid flow in a vane-type, two-stage pump. Oil from a reservoir enters a pump's inlet port and passes to the outlets of the first-stage pump cartridge. (Passages in a pump's body carry the discharge from this stage to an inlet of the second stage.) Outlet passages in the second stage direct the oil to an outlet port of the pump. Passage U connects both chambers on the inlet side of a second-stage pump and assures equal pressure in both chambers. (Pressures are those that are imposed on a pump from external sources.)

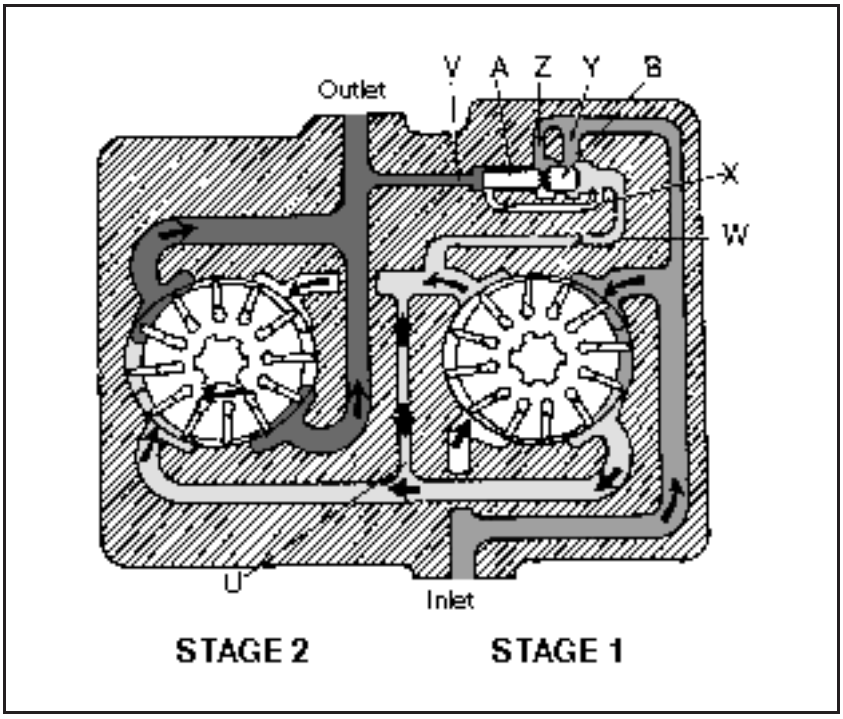

Figure 3-13. Vane-type, two-stage pump

A dividing valve (see Figure 3-13) consists of sliding pistons A and B. Piston A is exposed to outlet pressure through passage V. Piston B is exposed to the pressure between stages through passage W. The pistons respond to maintain a pressure load on a first-stage pump equal to half the outlet pressure at a second-stage pump. If the discharge from the first stage exceeds the volume that can be accepted at the second stage, a pressure rise occurs in passage W. The unbalanced force acting on piston B causes the pistons to move in such a manner that excess oil flows past piston B through passage Y to the inlet chamber of a first-stage cartridge. Fluid throttling across piston B in this manner maintains pressure in passage V.

If the discharge from a first-stage pump is less than the volume required at a second-stage pump, a reduced pressure occurs at piston B. An unbalanced force acting on piston A

causes the pistons to move so that oil flows past piston A into passages X and W to replenish a second-stage pump and correct the unbalanced condition. Passages Z and Y provide a means for leakage around the pistons to return to the inlet chamber of a first-stage pump. Pistons A and B always seek a position that equally divides the load between the two pumping units.

3-8. Piston Pumps. Piston pumps are either radial or axial.

a. *Radial.* In a radial piston pump (Figure 3-14), the pistons are arranged like wheel spokes in a short cylindrical block. A drive shaft, which is inside a circular housing, rotates a cylinder block. The block turns on a stationary pintle that contains the inlet and outlet ports. As a cylinder block turns, centrifugal force slings the pistons, which follow a circular housing. A housing's centerline is offset from a cylinder block's centerline. The amount of eccentricity between the two determines a piston stroke and, therefore, a pump's displacement. Controls can be applied to change a housing's location and thereby vary a pump's delivery from zero to maximum.

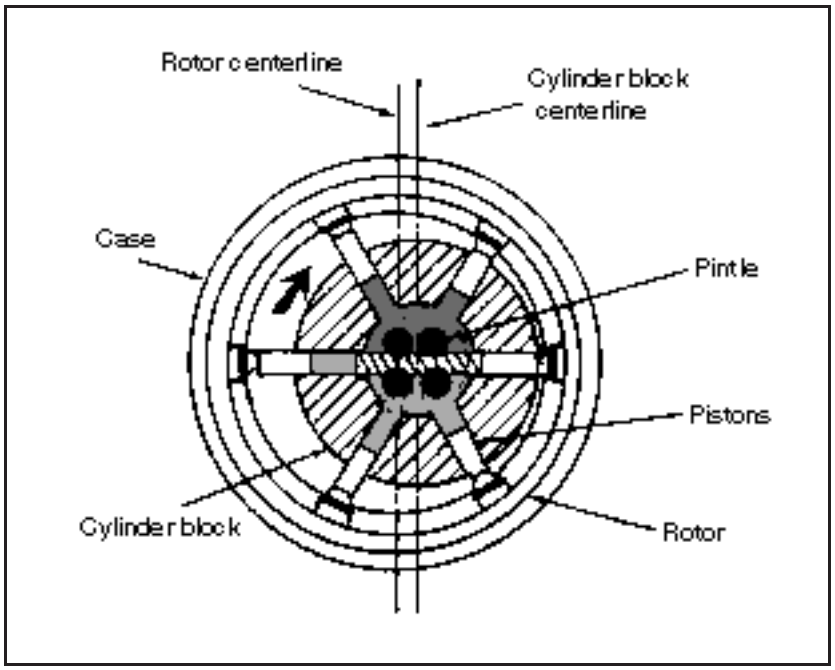

Figure 3-14. Simplified radial piston pump

Figure 3-15 shows a nine-piston, radial piston pump. When a pump has an uneven number of pistons, no more than one piston is completely blocked by a pintle at one time, which reduces flow pulsations. With an even number of pistons spaced around a cylinder block, two pistons could be blocked by a pintle at the same time. If this happens, three pistons would discharge at one time and four at another time, and pulsations would occur in the flow. A pintle, a cylinder block, the pistons, a rotor, and a drive shaft constitute the main working parts of a pump.

(1) Pintle. A pintle is a round bar that serves as a stationary shaft around which a cylinder block turns. A pintle shaft (Figure 3-16) has four holes bored from one end lengthwise through part of its length. Two holes serve as an intake and two as a discharge. Two slots are cut in a side of the shaft so that each slot connects two of the lengthwise holes. The slots are in-line with the pistons when a cylinder block is assembled on a pintle. One of these slots provides a path for a liquid to pass from the pistons to the discharge holes bored in a pintle. Another slot connects the two inlet holes to the pistons when they are drawing in liquid. The discharge holes are connected through appropriate fittings to a discharge line so that a liquid can be directed into a system. The other pair of holes is connected to an inlet line.

(2) Cylinder Block. A cylinder block (Figure 3-17, page 3-12) is a block of metal with a hole bored through its center to fit the pintle's and cylinder's holes that are bored equal distances apart around its outside edge. The cylinder's holes connect with the hole that receives a pintle. Designs differ; some cylinders appear to be almost solid, while others have spokelike cylinders radiating out from the center. A cylinder's and pintle's holes are accurately machined so that liquid loss around a piston is minimal.

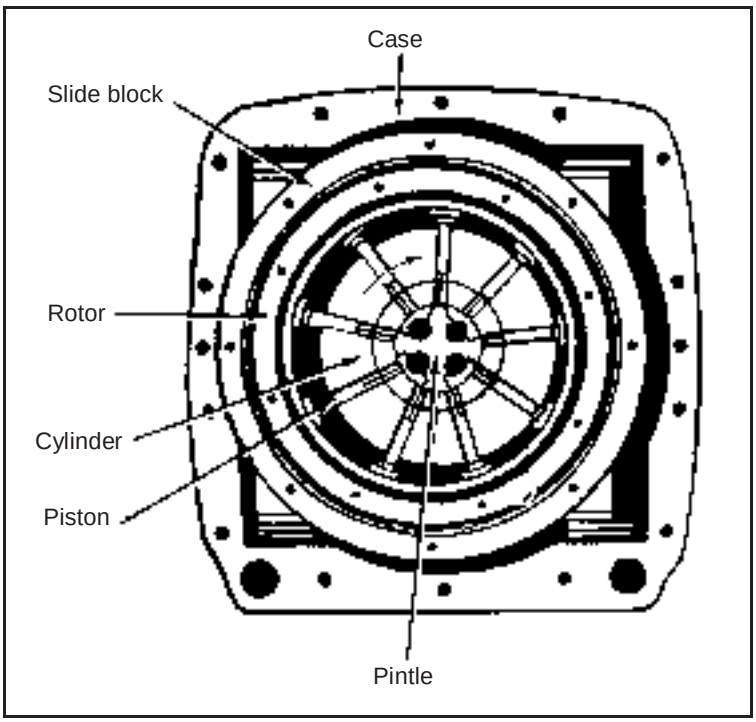

Figure 3-15. Nine-piston radial piston pump

(3) Pistons. Pistons are manufactured in different designs (see Figure 3-18, page 3-12). Diagram A shows a piston with small wheels that roll around the inside curve of a rotor. Diagram B shows a piston in which a conical edge of the top bears directly against a reaction ring of the rotor. In this design, a piston goes back and forth in a cylinder while it rotates about its axis so that the top surface will wear uniformly. Diagram C shows a piston attached to curved plates. The curved plates bear against and slide around the inside surface of a rotor. The pistons' sides are accurately machined to fit the cylinders so that there is a minimum loss of liquid between the walls of a piston and cylinder. No provision is made for using piston rings to help seal against piston leakage.

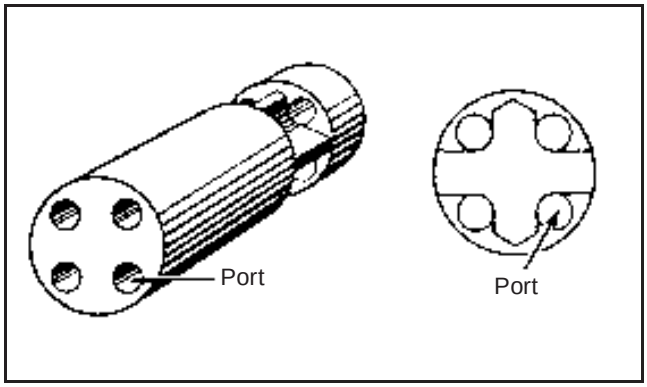

Figure 3-16. Pintle for a radial piston pump

(4) Rotors. Rotor designs may differ from pump to pump. A rotor consists of a circular ring, machine finished on the inside, against which the pistons bear. A rotor rotates within a slide block, which can be shifted from side to side to control the piston's length of stroke. A slide block has two pairs of machined surfaces on the exterior so that it can slide in tracks in the pump case.

(5) Drive Shaft. A drive shaft is connected to a cylinder block and is driven by an outside force such as an electric motor.

b. *Axial Piston Pumps.* In axial piston pumps, the pistons stroke in the same direction on a cylinder block's centerline (axially). Axial piston pumps may be an in-line or angle

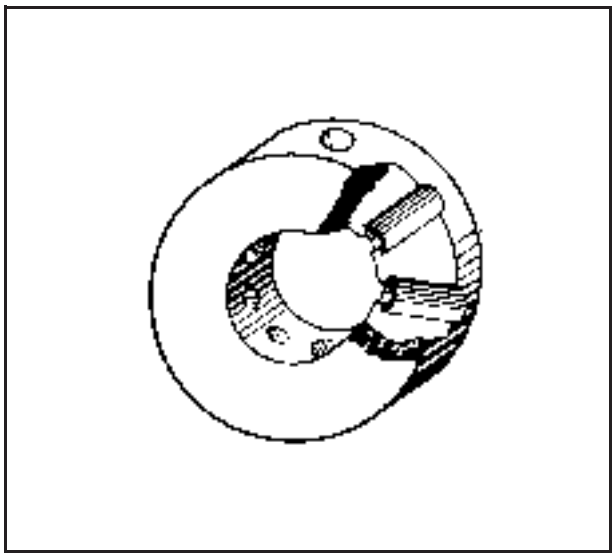

Figure 3-17. Cylinder block for a radial piston pump

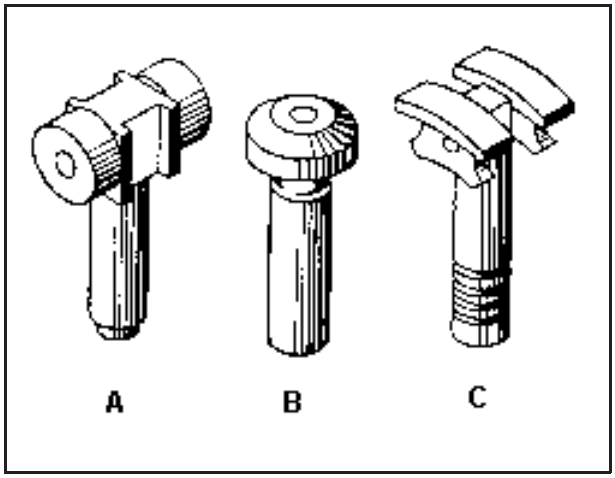

Figure 3-18. Pistons for a radial piston pump

design. In capacity, piston pumps range from low to very high. Pressures are as high as 5,000 psi, and drive speeds are medium to high. Efficiency is high, and pumps generally have excellent durability. Petroleum oil fluids are usually required. Pulsations in delivery are small and of medium frequency. The pumps are quiet in operation but may have a growl or whine, depending on condition. Except for in-line pumps, which are compact in size, piston pumps are heavy and bulky.

(1) In-Line Pump. In an in-line piston pump (Figure 3-19, diagram A), a drive shaft and cylinder block are on the same centerline. Reciprocation of the pistons is caused by a swash plate that the pistons run against as a cylinder block rotates. A drive shaft turns a cylinder block, which carries the pistons around a shaft. The piston shoes slide against a swash plate and are held against it by a shoe plate. A swash plate's angle causes the cylinders to reciprocate in their bores. At the point where a piston begins to retract, an opening in the end of a bore slides over an inlet slot in a valve plate, and oil is drawn into a bore through somewhat less than half a revolution. There is a solid area in a valve plate as a piston becomes fully retracted. As a piston begins to extend, an opening in a cylinder barrel moves over an outlet slot, and oil is forced out a pressure port.

(a) Displacement. Pump displacement depends on the bore and stroke of a piston and the number of pistons. A swash plate's angle (Figure 3-19, diagram B) determines the stroke, which can vary by changing the angle. In a fixed angle's unit, a swash plate is stationary in the housing. In a variable unit's, it is mounted on a yoke, which can turn on pintles. Different controls can be attached to the pintles to vary pump delivery from zero to the maximum. With certain controls, the direction of flow can be reversed by swinging a yoke past center. In the center position, a swash plate is perpendicular to the cylinder's, and there is no piston reciprocation; no oil is pumped.

(b) Components. The major components of a typical, fixed-displacement in-line pump are the housing, a bearing-supported drive shaft, a rotating group, a shaft seal, and a valve plate. A valve plate contains an inlet and an outlet port and functions as the back cover. A rotating group consists of a cylinder block that is splined to a drive shaft, a splined spherical washer, a spring, nine pistons with shoes, a swash plate, and a shoe plate. When a group is assembled, a spring forces a cylinder block against a valve plate and a spherical washer

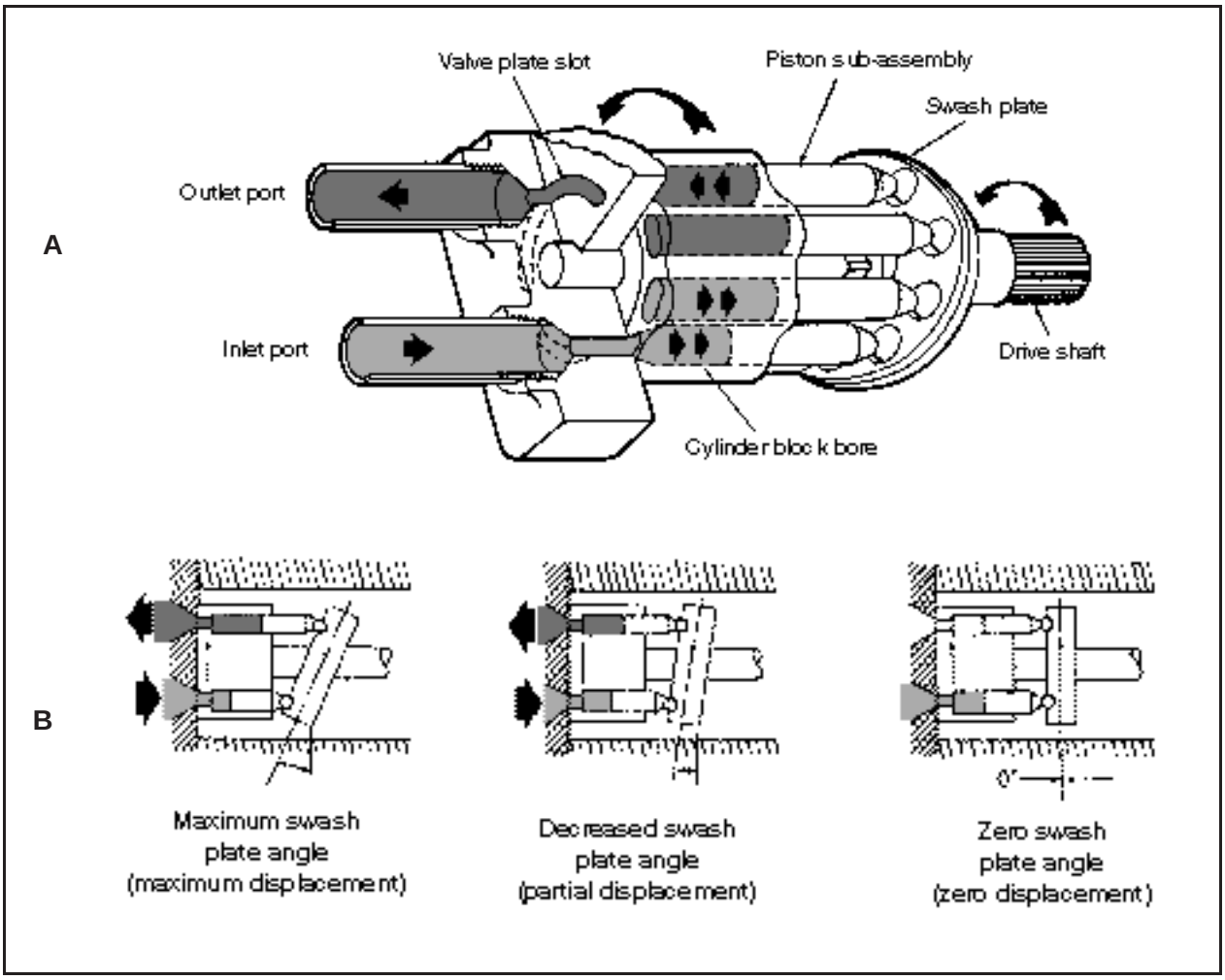

Figure 3-19. In-line piston pump

against a shoe plate. This action holds the piston shoes against a swash plate, ensuring that the pistons will reciprocate as the cylinder turns. A swash plate is stationary in a fixed-displacement design.

(c) Operation. A variable-displacement in-line pump operates the same as a fixed angle except that a swash plate is mounted on a pivoted yoke. A yoke can be swung to change a plate angle and thus change a pump's displacement. A yoke can be positioned manually with a screw or lever or by a compensator control, which positions a yoke automatically to maintain constant output pressure under variable flow requirements. A compensator control consists of a valve that is balanced between a spring and system pressure and a spring-loaded, yoke-actuating piston that is controlled by a valve. A pump's compensator control thus reduces its output only to the volume required to maintain a preset pressure. Maximum delivery is allowed only when pressure is less than a compensator's setting.

(2) Wobble-Plate In-Line Pump. This is a variation of an in-line piston pump. In this design, a cylinder barrel does not turn; a plate wobbles as it turns, and the wobbling pushes the pistons in and out of the pumping chambers in a stationary cylinder barrel. In a wobble-plate pump, separate inlet and outlet check valves are required for each piston, since the pistons do not move past a port.

(3) Bent-Axis Axial Piston Pump. In an angle- or a bent-axis-type piston pump (Figure 3-20), the piston rods are attached by ball joints to a drive shaft's flange. A universal link keys a cylinder block to a shaft so that they rotate together but at an offset angle. A cylinder barrel turns against a slotted valve plate to which the ports connect. Pumping action is the same as an in-line pump. The angle of offset determines a pump's displacement, just as the swash plate's angle determines an in-line pump's displacement. In fixed-delivery pumps, the angle is constant. In variable models, a yoke mounted on pintles swings a cylinder block to vary displacement. Flow direction can be reversed with appropriate controls.

3-9. Pump Operation. The following paragraphs address some of the problems that could occur when a pump is operating:

a. *Overloading.* One risk of overloading is the danger of excess torque on a drive shaft. Torque is circular force on an object. An increase in pressure/pump displacement will increase the torque on a shaft if pump displacement/pressure remains constant. Often in a given package size, a higher GPM pump will have a lower pressure rating than a lower GPM pump. Sometimes a field conversion to get more speed out of an actuator will cause a pump to be overloaded. You may need a larger pump.

b. *Excess Speed.* Running a pump at too high a speed causes loss of lubrication, which can cause early failure. If a needed delivery requires a higher drive speed than a pump's rating, use a higher displacement pump. Excess speed also runs a risk of damage from cavitation.

c. *Cavitation.* Cavitation occurs where available fluid does not fill an existing space. It often occurs in a pump's inlet when conditions are not right to supply enough oil to keep an inlet flooded. Cavitation causes the metal in an inlet to erode and the hydraulic oil to deteriorate quicker. Cavitation can occur if there is too much resistance in an inlet's line, if a res-

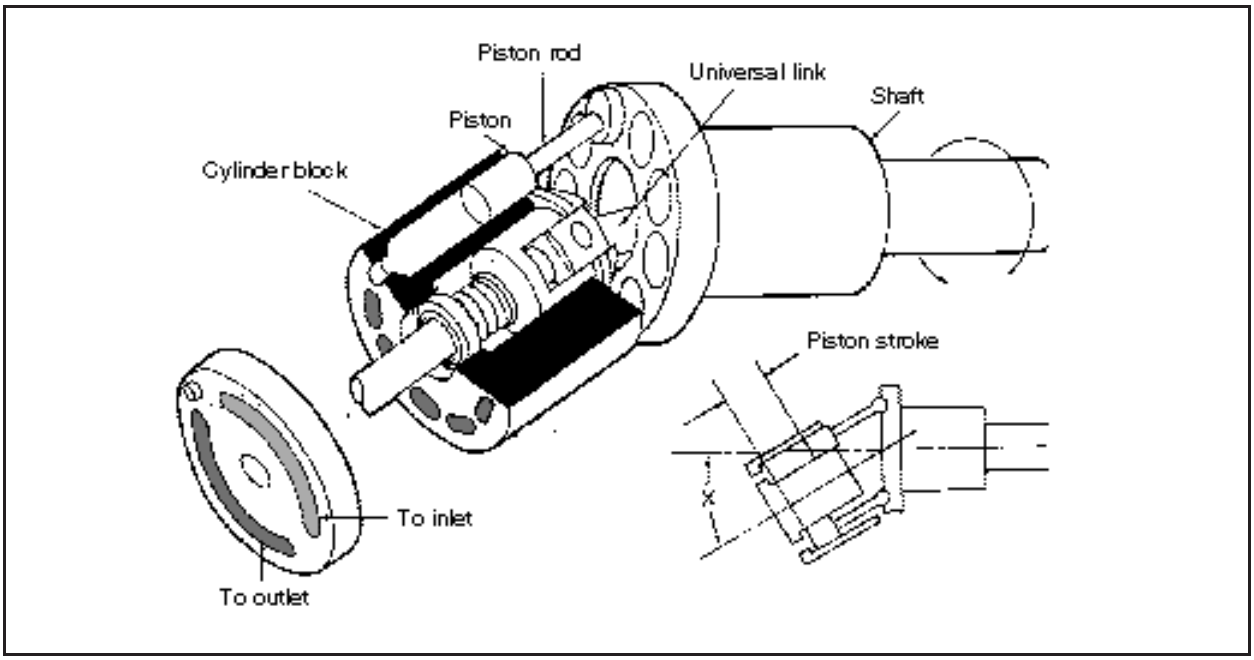

Figure 3-20. Bent-axis axial piston pump

ervoir's oil level is too far below the inlet, or if an oil's viscosity is too high. It can also occur if there is a vacuum or even a slight positive pressure at the inlet. A badly cavitating pump has oil bubbles exploding in the void. The only way to be sure a pump is not cavitating is to check the inlet with a vacuum gauge.

To prevent cavitation, keep the inlet clean and free of obstructions by using the correct length of an inlet's line with minimum bends. Another method is to charge an inlet. The easiest way to do this is to flood it by locating the reservoir above the pump's inlet. If this is not possible and you cannot create good inlet conditions, use a pressurized reservoir. You can also use an auxiliary pump to maintain a supply of oil to an inlet at low pressure. You could use a centrifugal pump, but it is more common to use a positive-displacement gear pump with a pressure-relief valve that is set to maintain the desired charging pressure.

d. *Operating Problems.* Pressure loss, slow operation, no delivery, and noise are common operating problems in a pump.

(1) Pressure Loss. Pressure loss means that there is a high leakage path in a system. A badly worn pump could cause pressure loss. A pump will lose its efficiency gradually. The actuator speed slows down as a pump wears. However, pressure loss is more often caused by leaks somewhere else in a system (relief valve, cylinders, motors).

(2) Slow Operation. This can be caused by a worn pump or by a partial oil leak in a system. Pressure will not drop, however, if a load moves at all. Therefore, hp is still being used and is being converted into heat at a leakage point. To find this point, feel the components for unusual heat.

(3) No Delivery. If oil is not being pumped, a pump—

- Could be assembled incorrectly.
- Could be driven in the wrong direction.
- Has not been primed. The reasons for no prime are usually improper start-up, inlet restrictions, or low oil level in a reservoir.
- Has a broken drive shaft.

(4) Noise. If you hear any unusual noise, shut down a pump immediately. Cavitation noise is caused by a restriction in an inlet line, a dirty inlet filter, or too high a drive speed. Air in a system also causes noise. Air will severely damage a pump because it will not have enough lubrication. This can occur from low oil in a reservoir, a loose connection in an inlet, a leaking shaft seal, or no oil in a pump before starting. Also, noise can be caused by worn or damaged parts, which will spread harmful particles through a system, causing more damage if an operation continues.

CHAPTER 4

Hydraulic Actuators

A hydraulic actuator receives pressure energy and converts it to mechanical force and motion. An actuator can be linear or rotary. A linear actuator gives force and motion outputs in a straight line. It is more commonly called a cylinder but is also referred to as a ram, reciprocating motor, or linear motor. A rotary actuator produces torque and rotating motion. It is more commonly called a hydraulic motor or motor.

4-1. Cylinders. A cylinder is a hydraulic actuator that is constructed of a piston or plunger that operates in a cylindrical housing by the action of liquid under pressure. Figure 4-1 shows the basic parts of a cylinder. A cylinder housing is a tube in which a plunger (piston) operates. In a ram-type cylinder, a ram actuates a load directly. In a piston cylinder, a piston rod is connected to a piston to actuate a load. An end of a cylinder from which a rod or plunger protrudes is a rod end. The opposite end is a head end. The hydraulic connections are a head-end port and a rod-end port (fluid supply).

a. *Single-Acting Cylinder.* This cylinder (Figure 4-1) only has a head-end port and is operated hydraulically in one direction. When oil is pumped into a port, it pushes on a plunger, thus extending it. To return or retract a cylinder, oil must be released to a reservoir. A plunger returns either because of the weight of a load or from some mechanical force such as a spring. In mobile equipment, flow to and from a single-acting cylinder is controlled by a reversing directional valve of a single-acting type.

b. *Double-Acting Cylinder.* This cylinder (Figure 4-2, page 4-2) must have ports at the head and rod ends. Pumping oil into the head end moves a piston to extend a rod while any oil in the rod end is pushed out and returned to a reservoir. To retract a rod, flow is reversed. Oil from a pump goes into a rod end, and a head-end port is connected to allow return flow. The flow direction to and from a double-acting cylinder can be controlled by a double-acting directional valve or by actuating a control of a reversible pump.

c. *Differential Cylinder.* In a differential cylinder, the areas where pressure is applied on a piston are not equal. On a head end, a full piston area is available for applying pressure. At a rod end, only an annular area is available for applying pressure. A rod's area is not a factor, and

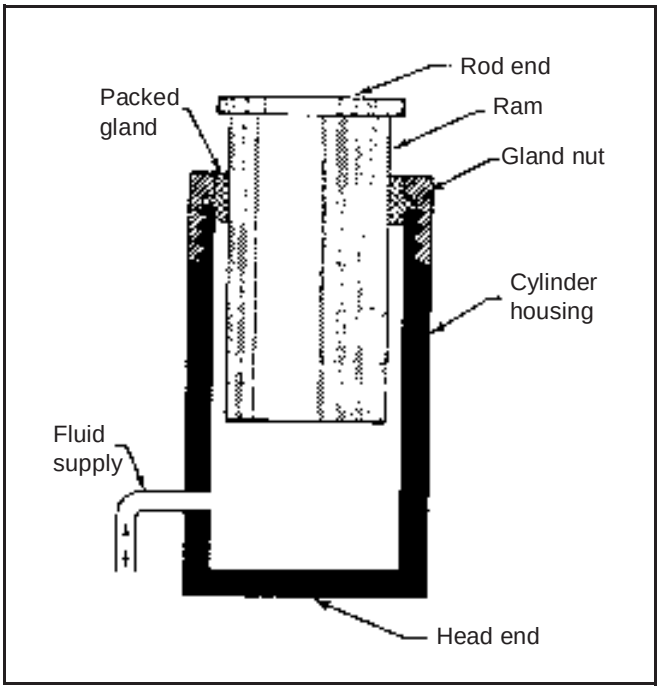

Figure 4-1. Single-acting cylinder

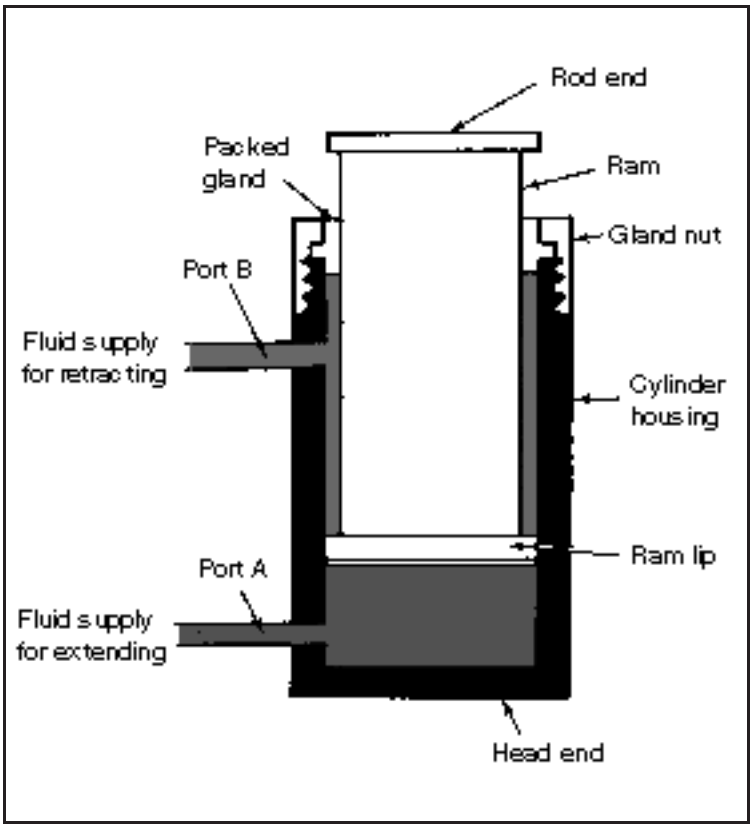

Figure 4-2. Double-acting cylinder

what space it does take up reduces the volume of oil it will hold. Two general rules about a differential cylinder are that—

- With an equal GPM delivery to either end, a cylinder will move faster when retracting because of a reduced volume capacity.
- With equal pressure at either end, a cylinder can exert more force when extending because of the greater piston area. In fact, if equal pressure is applied to both ports at the same time, a cylinder will extend because of a higher resulting force on a head end.

d. *Nondifferential Cylinder.* This cylinder (Figure 4-3) has a piston rod extending from each end. It has equal thrust and speed either way, provided that pressure and flow are unchanged. A nondifferential cylinder is rarely used on mobile equipment.

e. *Ram-Type Cylinder.* A ram-type cylinder is a cylinder in which a cross-sectional area of a piston rod is more than one-half a cross-sectional area of a piston head. In many cylinders of this type, the rod and piston heads have equal areas. A ram-type actuating cylinder is used mainly for push functions rather than pull.

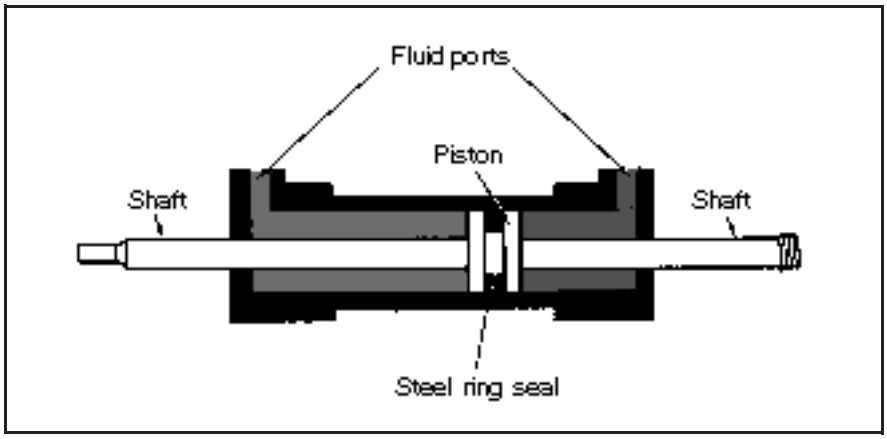

Figure 4-3. Nondifferential cylinder

Figure 4-1, page 4-1, shows a single-acting, ram-type cylinder. A single-acting ram applies force in one direction. This cylinder is often used in a hydraulic jack. In a double-acting, ram-type cylinder, both strokes of a ram are produced by pressurized fluid. Figure 4-2 shows this cylinder.

Figure 4-4 shows a telescoping, ram-type, actuating cylinder, which can be a single- or double-acting type. In this cylinder, a series of rams are nested in a telescoping assembly. Except for the smallest ram, each ram is hollow and serves as a cylinder housing for the next smaller ram. A ram assembly is contained in a main cylinder housing, which also provides the fluid ports. Although an assembly requires a small space with all of the rams retracted, a telescoping action of an assembly provides a relatively long stroke when the rams are extended.

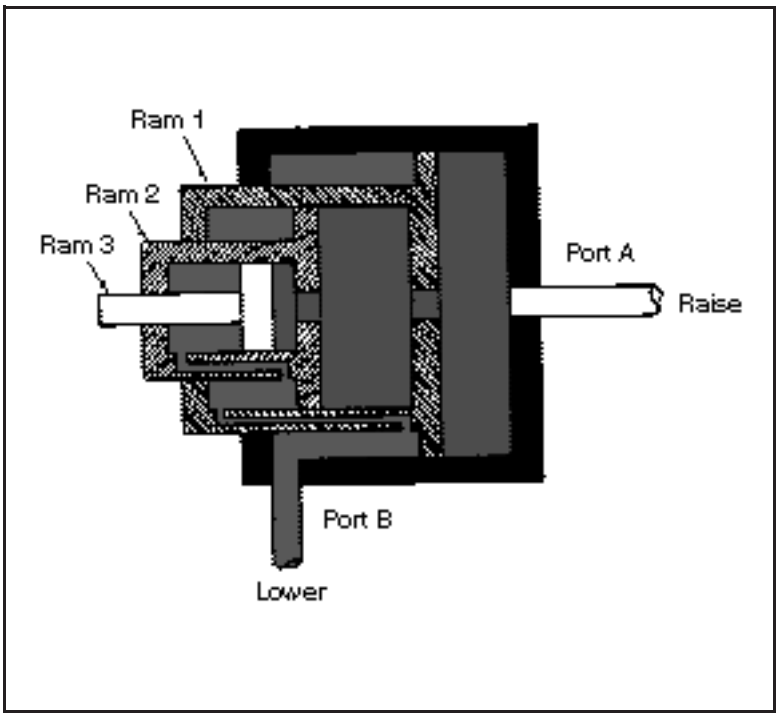

Figure 4-4. Telescoping, ram-type, actuating cylinder

f. *Piston-Type Cylinder.* In this cylinder, a cross-sectional area of a piston head is referred to as a piston-type cylinder. A piston-type cylinder is used mainly when the push and pull functions are needed.

A single-acting, piston-type cylinder uses fluid pressure to apply force in one direction. In some designs, the force of gravity moves a piston in the opposite direction. However, most cylinders of this type apply force in both directions. Fluid pressure provides force in one direction and spring tension provides force in the opposite direction.

Figure 4-5 shows a single-acting, spring-loaded, piston-type cylinder. In this cylinder, a spring is located on the rod side of a piston. In some spring-loaded cylinders, a spring is located on a blank side, and a fluid port is on a rod end of a cylinder.

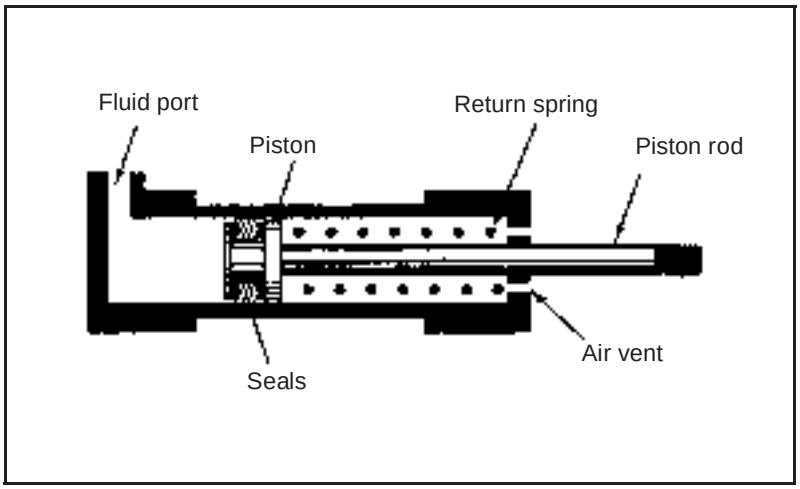

Figure 4-5. Single-acting, spring-loaded, piston-type cylinder

Most piston-type cylinders are double-acting, which means that fluid under pressure can be applied to either side of a piston to provide movement and apply force in a corresponding direction. Figure 4-6 shows a double-acting piston-type cylinder.

This cylinder contains one piston and piston-rod assembly and operates from fluid flow in either direction. The two fluid ports, one near each end of a cylinder, alternate as an inlet and an outlet, depending on the directional-control valve flow direction. This is an unbalanced cylinder, which means that there is a difference in the effective working area on the two sides of a piston. A cylinder is normally installed so that the head end of a piston carries the greater load; that is, a cylinder carries the greater load during a piston-rod extension stroke.

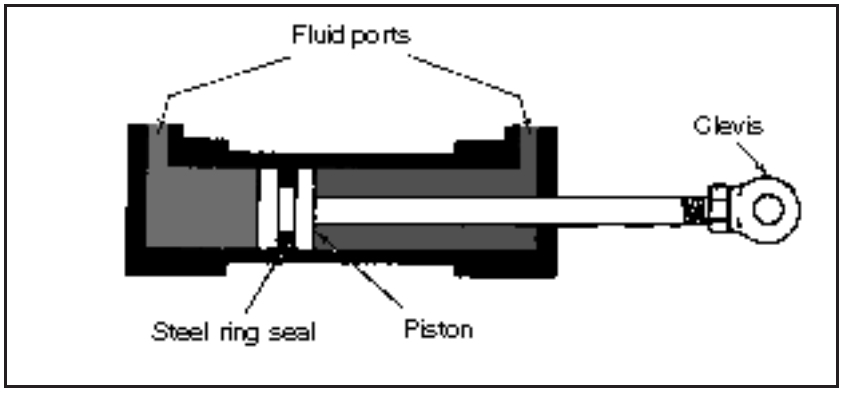

Figure 4-6. Double-acting, piston-type cylinder

Figure 4-6 shows a balanced, double-acting, piston-type cylinder. The effective working area on both sides of a piston is the same, and it exerts the same force in both directions.

g. *Cushioned Cylinder.* To slow an action and prevent shock at the end of a piston stroke, some actuating cylinders are constructed with a cushioning device at either or both ends of a cylinder. This cushion is usually a metering device built into a cylinder to restrict the flow at an outlet port, thereby slowing down the motion of a piston. Figure 4-7 shows a cushioned actuating cylinder.

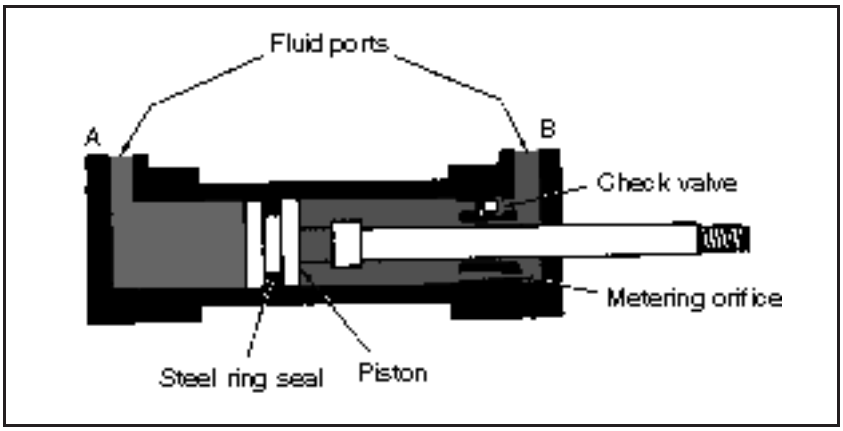

Figure 4-7. Cushioned, actuating cylinder

h. *Lockout Cylinders.* A lockout cylinder is used to lock a suspension mechanism of a tracked vehicle when a vehicle functions as a stable platform. A cylinder also serves as a shock absorber when a vehicle is moving. Each lockout cylinder is connected to a road arm by a control lever. When each road wheel moves up, a control lever forces the respective cylinder to compress. Hydraulic fluid is forced around a piston head through restrictor ports causing a cylinder to act as a shock absorber. When hydraulic pressure is applied to an inlet port on each cylinder's connecting eye, an inner control-valve piston is forced against a spring in each cylinder. This action closes the restrictor ports, blocks the main piston's motion in each cylinder, and locks the suspension system.

4-2. Construction and Application. A cylinder is constructed of a barrel or tube, a piston and rod (or ram), two end caps, and suitable oil seals. A barrel is usually seamless steel tubing, or cast, and the interior is finished very true and smoothly. A steel piston rod is highly polished and usually hard chrome-plated to resist pitting and scoring. It is supported in the end cap by a bushing or polished surface.

The cylinder's ports are built into the end caps, which can be screwed on to the tubes, welded, or attached by tie bolts or bolted flanges. If the cylinder barrel is cast, the head-end cap may be integral with it. Mounting provisions often are made in the end caps, including flanges for stationary mounting or clevises for swinging mounts.

Seals and wipers are installed in the rod's end cap to keep the rod clean and to prevent external leakage around the rod. Other points where seals are used are at the end cap and joints and between the piston and barrel. Depending on how the rod is attached to the piston, a seal may be needed. Internal leakage should not occur past a piston. It wastes energy and can stop a load by a hydrostatic lock (oil trapped behind a piston).

Figure 4-8, page 4-6, shows force-and-motion applications of cylinders. Because fluid power systems have many requirements, actuating cylinders are available in different shapes and sizes. A cylinder-type actuator is versatile and may be the most trouble-free component of fluid-powered systems. A cylinder and a mechanical member of a unit to be actuated must be aligned correctly. Any misalignment will cause excessive wear of a piston, a piston rod, and the seals. Also, a piston rod and an actuating unit must stay properly adjusted. Clean the exposed ends of the piston rods to ensure that foreign matter does not get into the cylinders.

4-3. Maintenance. Hydraulic cylinders are compact and relatively simple. The key points to watch are the seals and pivots. The following lists service tips in maintaining cylinders:

a. *External Leakage.* If a cylinder's end caps are leaking, tighten them. If the leaks still do not stop, replace the gasket. If a cylinder leaks around a piston rod, replace the packing. Make sure that a seal lip faces toward the pressure oil. If a seal continues to leak, check paragraphs 4-3*e* through *i*.

b. *Internal Leakage.* Leakage past the piston seals inside a cylinder can cause sluggish movement or settling under load. Piston leakage can be caused by worn piston seals or rings or scored cylinder walls. The latter may be caused by dirt and grit in the oil.

NOTE: When repairing a cylinder, replace all the seals and packings before reassembly.

c. *Creeping Cylinder.* If a cylinder creeps when stopped in midstroke, check for internal leakage (paragraph 4-3*b*). Another cause could be a worn control valve.

d. *Sluggish Operation.* Air in a cylinder is the most common cause of sluggish action. Internal leakage in a cylinder is another cause. If an action is sluggish when starting up a system, but speeds up when a system is warm, check for oil of too high a viscosity (see the machine's operating manual). If a cylinder is still sluggish after these checks, test the whole circuit for worn components.

e. *Loose Mounting.* Pivot points and mounts may be loose. The bolts or pins may need to be tightened, or they may be worn out. Too much slop or float in a cylinder's mountings damages the piston-rod seals. Periodically check all the cylinders for loose mountings.

f. *Misalignment.* Piston rods must work in-line at all times. If they are side-loaded, the piston rods will be galled and the packings will be damaged, causing leaks. Eventually, the piston rods may be bent or the welds broken.

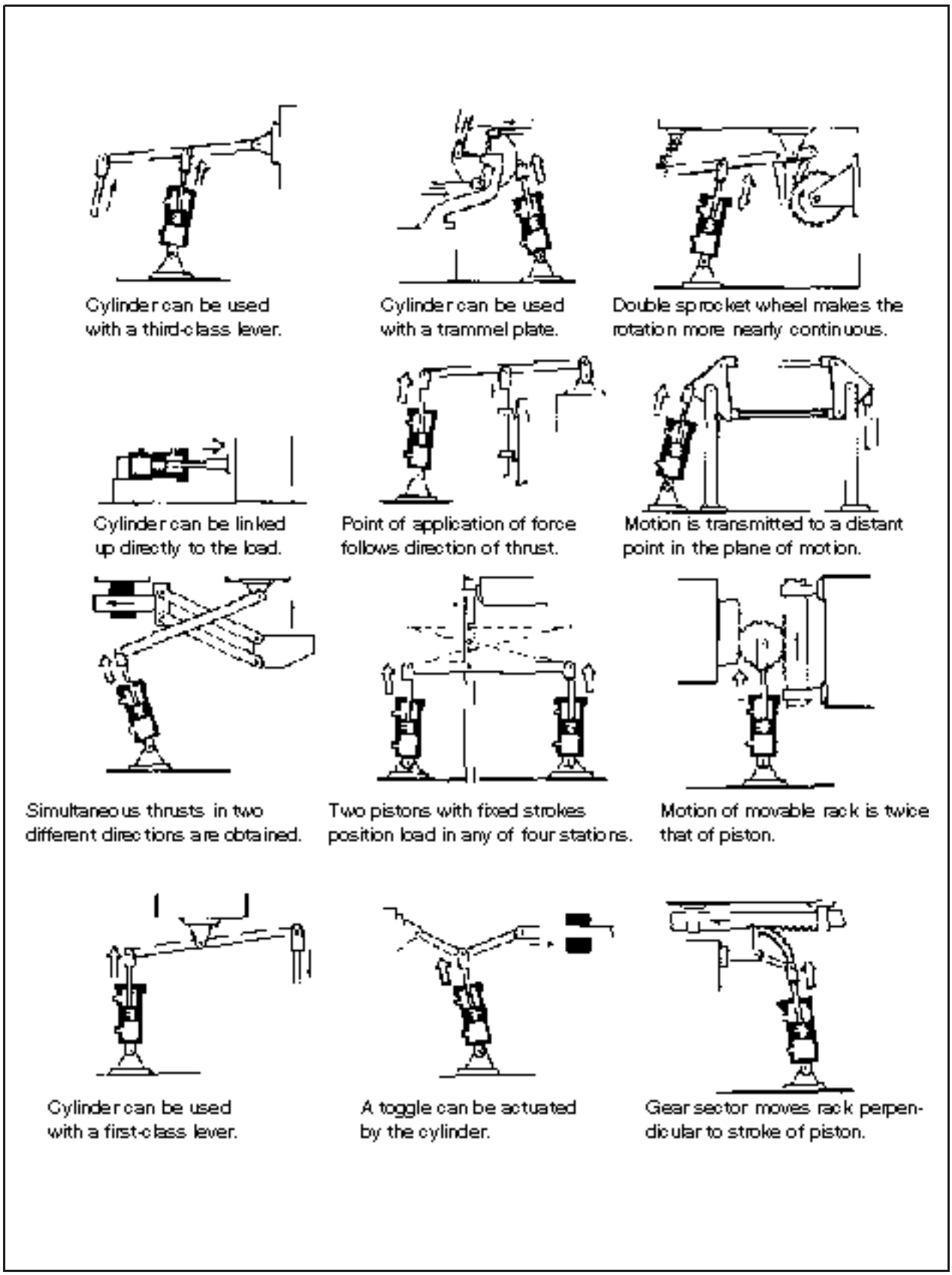

Figure 4-8. Applications of cylinders

g. *Lack of Lubrication*. If a piston rod has no lubrication, a rod packing could seize, which would result in an erratic stroke, especially on single-acting cylinders.

h. *Abrasives on a Piston Rod*. When a piston rod extends, it can pick up dirt and other material. When it retracts, it carries the grit into a cylinder, damaging a rod seal. For this reason, rod wipers are often used at the rod end of a cylinder to clean the rod as it retracts. Rubber boots are also used over the end of a cylinder in some cases. Piston rods rusting is another problem. When storing cylinders, always retract the piston rods to protect them. If you cannot retract them, coat them with grease.

i. *Burrs on a Piston Rod*. Exposed piston rods can be damaged by impact with hard objects. If a smooth surface of a rod is marred, a rod seal may be damaged. Clean the burrs on a rod immediately, using crocus cloth. Some rods are chrome-plated to resist wear. Replace the seals after restoring a rod surface.

j. *Air Vents*. Single-acting cylinders (except ram types) must have an air vent in the dry side of a cylinder. To prevent dirt from getting in, use different filter devices. Most are self-cleaning, but inspect them periodically to ensure that they operate properly.

4-4. Hydraulic Motors. Hydraulic motors convert hydraulic energy into mechanical energy. In industrial hydraulic circuits, pumps and motors are normally combined with a proper valving and piping to form a hydraulic-powered transmission. A pump, which is mechanically linked to a prime mover, draws fluid from a reservoir and forces it to a motor. A motor, which is mechanically linked to the workload, is actuated by this flow so that motion or torque, or both, are conveyed to the work. Figure 4-9 shows the basic operations of a hydraulic motor.

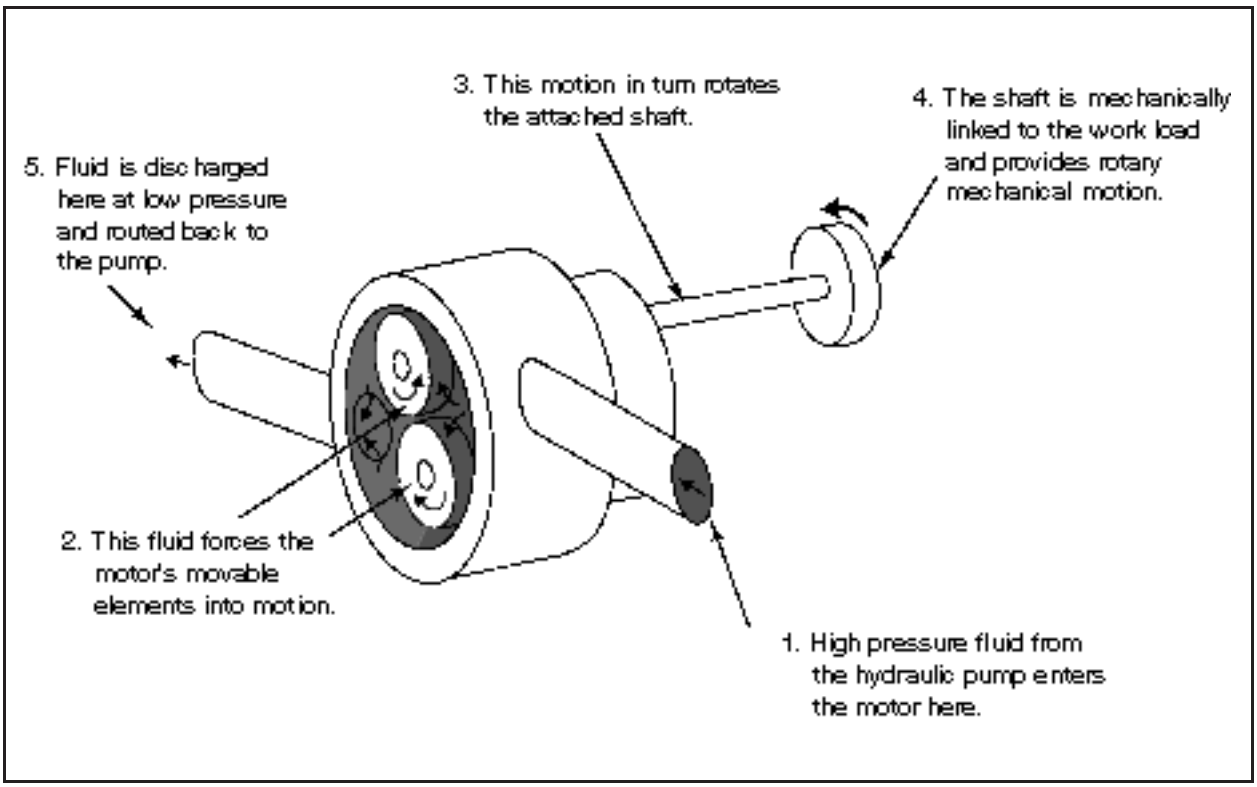

Figure 4-9. Basic operations of a hydraulic motor

The principal ratings of a motor are torque, pressure, and displacement. Torque and pressure ratings indicate how much load a motor can handle. Displacement indicates how much flow is required for a specified drive speed and is expressed in cubic inches per revolutions, the same as pump displacement. Displacement is the amount of oil that must be pumped into a motor to turn it one revolution. Most motors are fixed-displacement; however, variable-displacement piston motors are in use, mainly in hydrostatic drives. The main types of motors are gear, vane, and piston. They can be unidirectional or reversible. (Most motors designed for mobile equipment are reversible.)

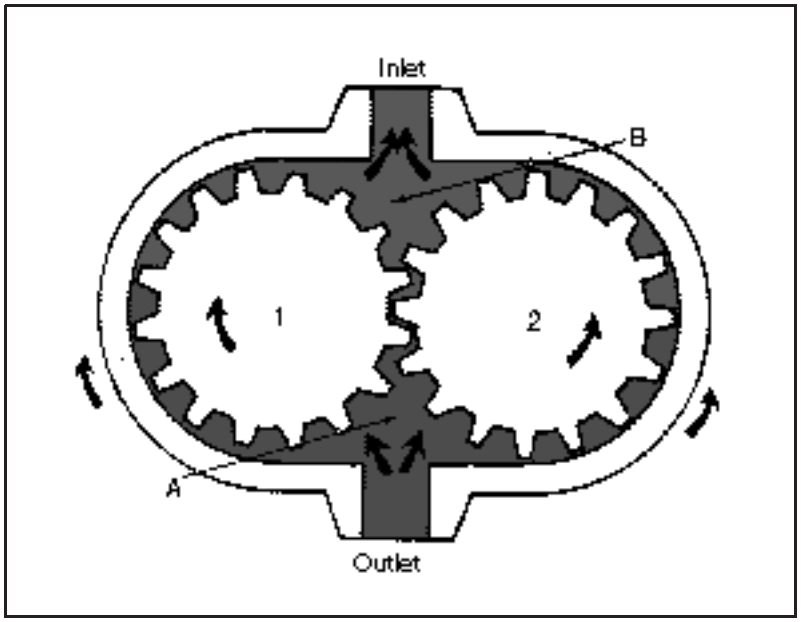

Figure 4-10. Gear-type motor

a. *Gear-Type Motors.* Figure 4-10 shows a gear-type motor. Both gears are driven gears, but only one is connected to the output shaft. Operation is essentially the reverse of that of a gear pump. Flow from the pump enters chamber A and flows in either direction around the inside surface of the casing, forcing the gears to rotate as indicated. This rotary motion is then available for work at the output shaft.

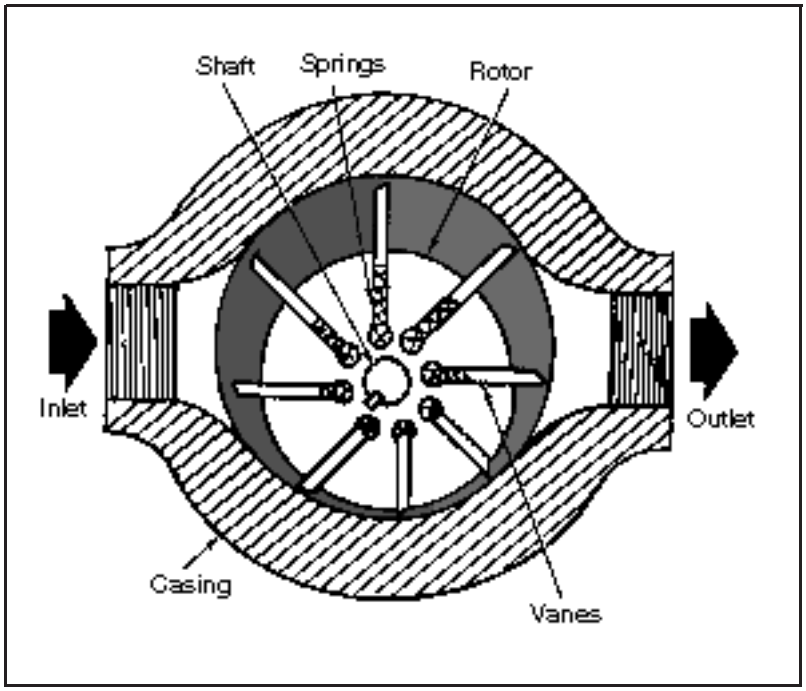

Figure 4-11. Vane-type motor

b. *Vane-Type Motors.* Figure 4-11 shows a vane-type motor. Flow from the pump enters the inlet, forces the rotor and vanes to rotate, and passes out through the outlet. Motor rotation causes the output shaft to rotate. Since no centrifugal force exists until the motor begins to rotate, something, usually springs, must be used to initially hold the vanes against the casing contour. However, springs usually are not necessary in vane-type pumps because a drive shaft initially supplies centrifugal force to ensure vane-to-casing contact.

Vane motors are balanced hydraulically to prevent a rotor from side-loading a shaft. A shaft is supported by two ball bearings. Torque is developed by a pressure difference as oil from a pump is forced through a motor. Figure 4-12 shows pressure differential on a single vane as it passes the inlet port. On the trailing side open to the inlet port, the vane is subject to full system pressure. The chamber leading the vane is subject to the much lower outlet pressure. The difference in pressure exerts the force on the vane that is, in effect, tangential to the rotor. This pressure difference is effective across vanes 3 and 9 as shown in Figure 4-13. The other vanes are subject to essentially equal force on both sides. Each will develop torque as the rotor turns. Figure 4-13 shows the flow condition for counterclockwise rotation as viewed from the cover end. The body port is the inlet, and the cover port is the outlet. Reverse the flow, and the rotation becomes clockwise.

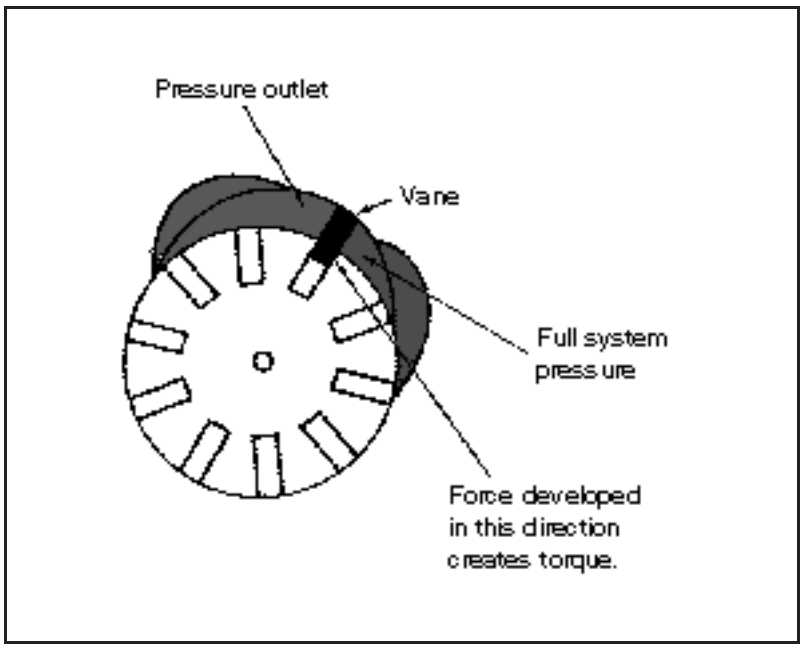

Figure 4-12. Pressure differential on a vane-type motor

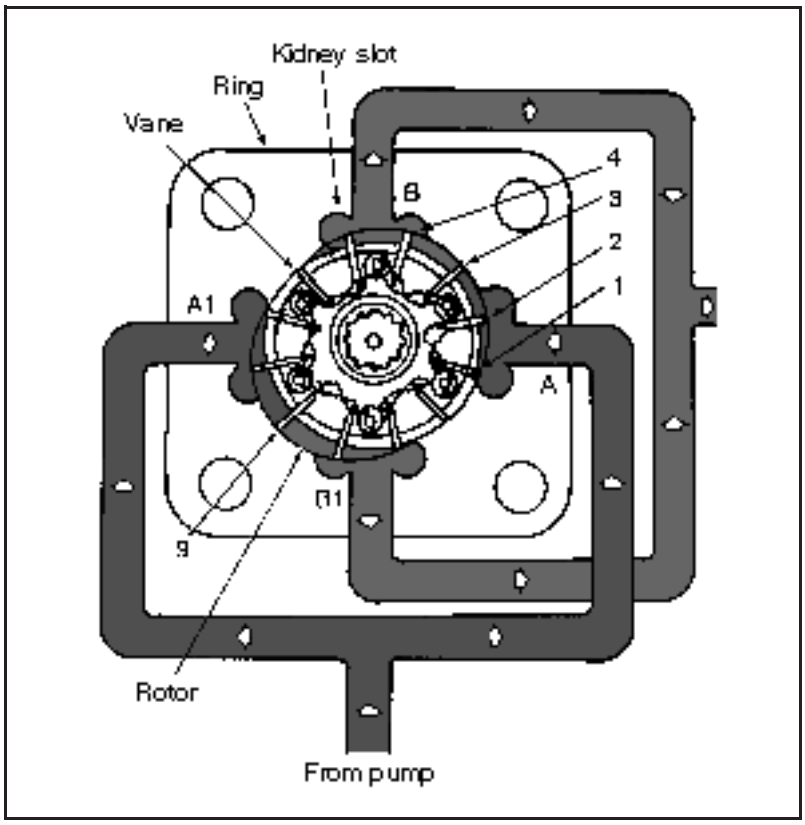

Figure 4-13. Flow condition in a vane-type pump

In a vane-type pump, the vanes are pushed out against a cam ring by centrifugal force when a pump is started up. A design motor uses steel-wire rocker arms (Figure 4-14, page 4-10) to push the vanes against the cam ring. The arms pivot on pins attached to the rotor. The ends of each arm support two vanes that are 90 degrees apart. When the cam ring pushes vane A into its slot, vane B slides out. The reverse also happens. Amotor's pressure plate functions the same as a pump's. It seals the side of a rotor and ring against

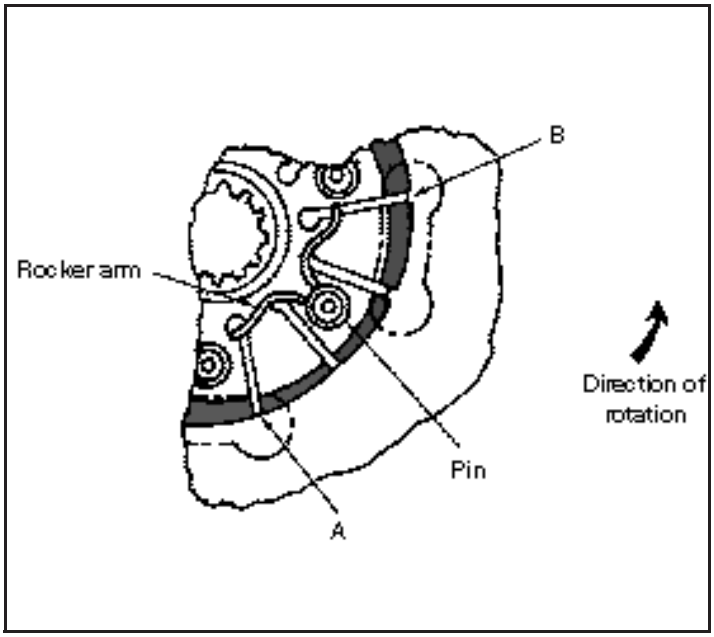

Figure 4-14. Rocker arms pushing vanes in a pump

internal leakage, and it feeds system pressure under the vanes to hold them out against a ring. This is a simple operation in a pump because a pressure plate is right by a high-pressure port in the cover.

c. Piston-Type Motors. Piston-type motors can be in-line-axis or bent-axis types.

(1) In-Line-Axis, Piston-Type Motors. These motors (Figure 4-15) are almost identical to the pumps. They are built-in, fixed- and variable-displacement models in several sizes. Torque is developed by a pressure drop through a motor. Pressure exerts a force on the ends of the pistons, which is translated into shaft rotation. Shaft rotation of most models can be reversed anytime by reversing the flow direction.

Oil from a pump is forced into the cylinder bores through a motor's inlet port. Force on the pistons at this point pushes them against a swash plate. They can move only by sliding along a swash plate to a point further away from a cylinder's barrel, which causes it to rotate. The barrel is then splined to a shaft so that it must turn.

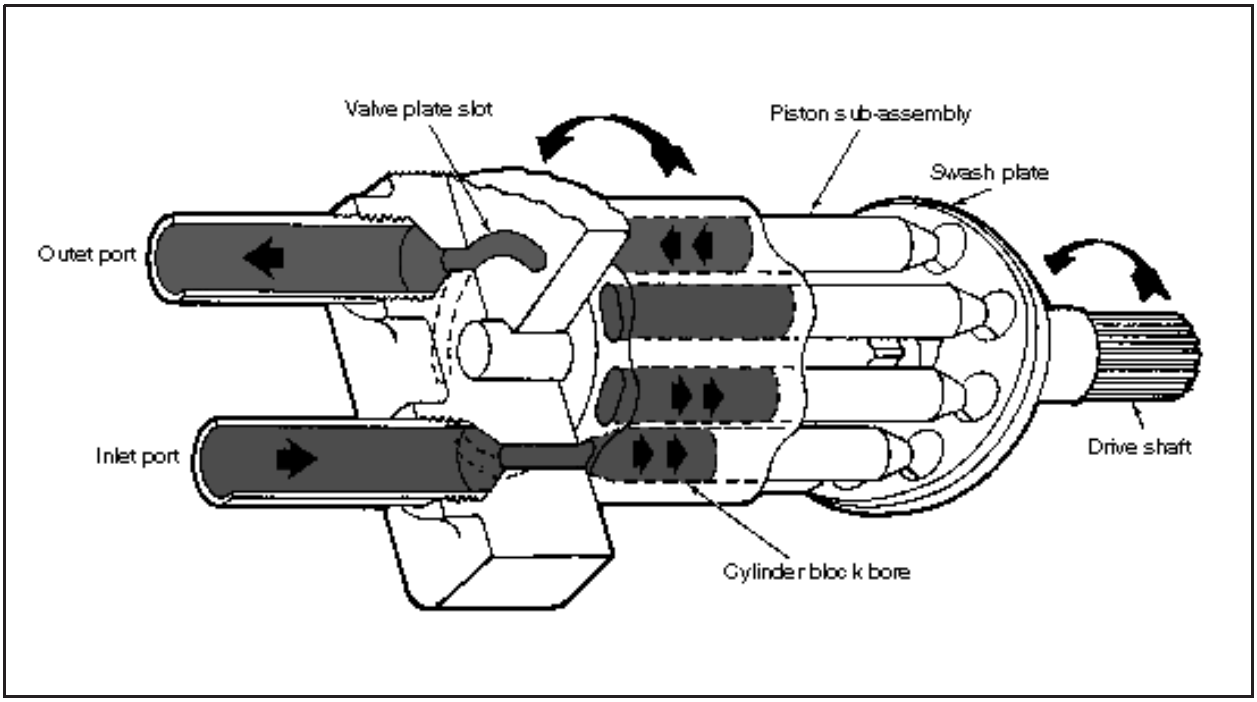

Figure 4-15. In-line-axis, piston-type motor

A motor's displacement depends on the angle of a swash plate (Figure 4-16). At maximum angle, displacement is at its highest because the pistons travel at maximum length. When the angle is reduced, piston travel shortens, reducing displacement. If flow remains constant, a motor runs faster, but torque is decreased. Torque is greatest at maximum displacement because the component of piston force parallel to a swash plate is greatest.

(2) Bent-Axis, Piston-Type Motors. These motors are almost identical to the pumps. They are available in fixed- and variable-displacement models (Figure 4-17), in several sizes.

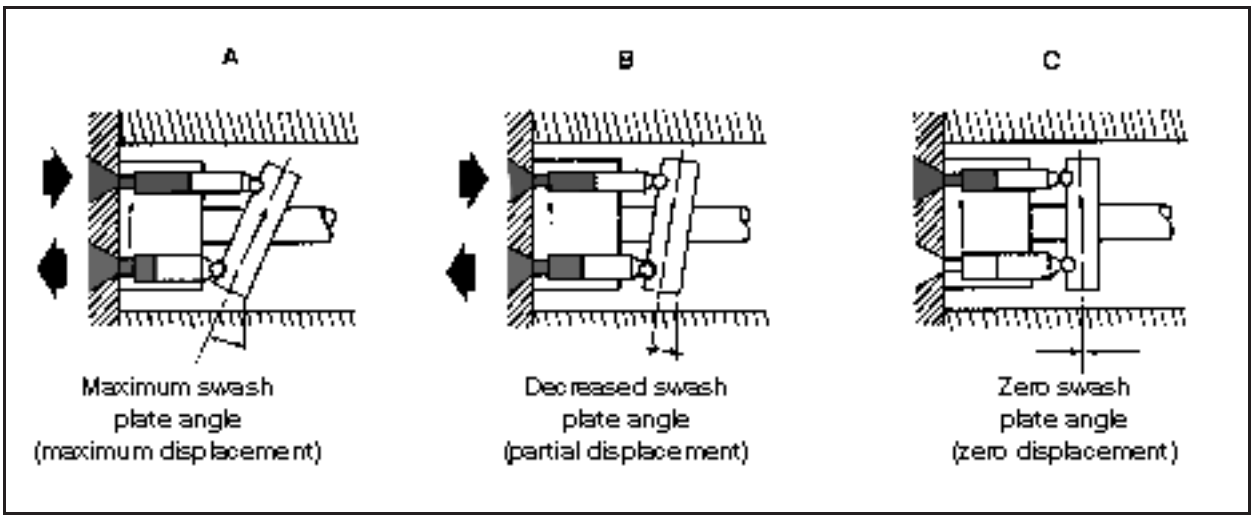

Figure 4-16. Swash plate

Variable-displacement motors can be controlled mechanically or by pressure compensation. These motors operate similarly to in-line motors except that piston thrust is against a drive-shaft flange. A parallel component of thrust causes a flange to turn. Torque is maximum at maximum displacement; speed is at a minimum. This design piston motor is very heavy and bulky, particularly the variable-displacement motor. Using these motors on mobile equipment is limited.

Although some piston-type motors are controlled by directional-control valves, they are often used in combination with variable-displacement pumps. This pump-motor combination (hydraulic transmission) is used to provide a transfer of power between a driving element, such as an electric motor, and a driven element. Hydraulic transmissions may be used for applications such as a speed reducer, variable speed drive, constant speed or constant torque

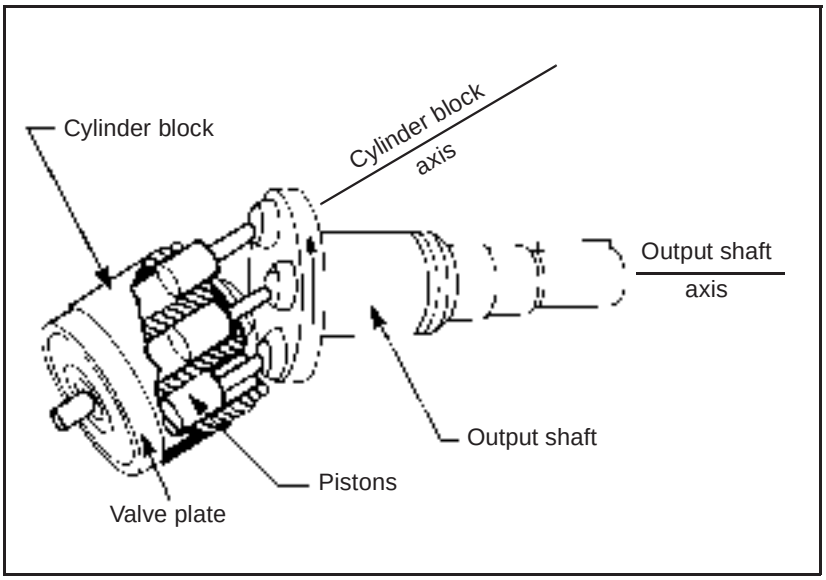

Figure 4-17. Bent-axis, piston-type motor

drive, and torque converter. Some advantages a hydraulic transmission has over a mechanical transmission is that it has—

- Quick, easy speed adjustment over a wide range while the power source is operating at constant (most efficient) speed.
- Rapid, smooth acceleration or deceleration.
- Control over maximum torque and power.
- A cushioning effect to reduce shock loads.
- A smooth reversal of motion.

CHAPTER 5

Valves

Valves are used in hydraulic systems to control the operation of the actuators. Valves regulate pressure by creating special pressure conditions and by controlling how much oil will flow in portions of a circuit and where it will go. The three categories of hydraulic valves are pressure-control, flow- (volume-) control, and directional-control (see Figure 5-1). Some valves have multiple functions, placing them into more than one category. Valves are rated by their size, pressure capabilities, and pressure drop/flow.

5-1. Pressure-Control Valves. A pressure-control valve may limit or regulate pressure, create a particular pressure condition required for control, or cause actuators to operate in a specific order. All pure pressure-control valves operate in a condition approaching hydraulic balance. Usually the balance is very simple: pressure is effective on one side or end of a ball, poppet, or spool and is opposed by a spring. In operation, a valve takes a position where hydraulic pressure balances a spring force. Since spring force varies with compression, distance and pressure also can vary. Pressure-control valves are said to be infinite positioning. This means that they can take a position anywhere between two finite flow conditions, which changes a large volume of flow to a small volume, or pass no flow.

Most pressure-control valves are classified as normally closed. This means that flow to a valve's inlet port is blocked from an outlet port until there is enough pressure to cause an unbalanced operation. In normally open valves, free flow occurs through the valves until they begin to operate in balance. Flow is partially restricted or cut off. Pressure override is a characteristic of normally closed-pressure controls when they are operating in balance. Because the force of a compression spring increases as it lowers, pressure when the valves first crack is less than when they are passing a large volume or full flow. The difference between a full flow and cracking pressure is called override.

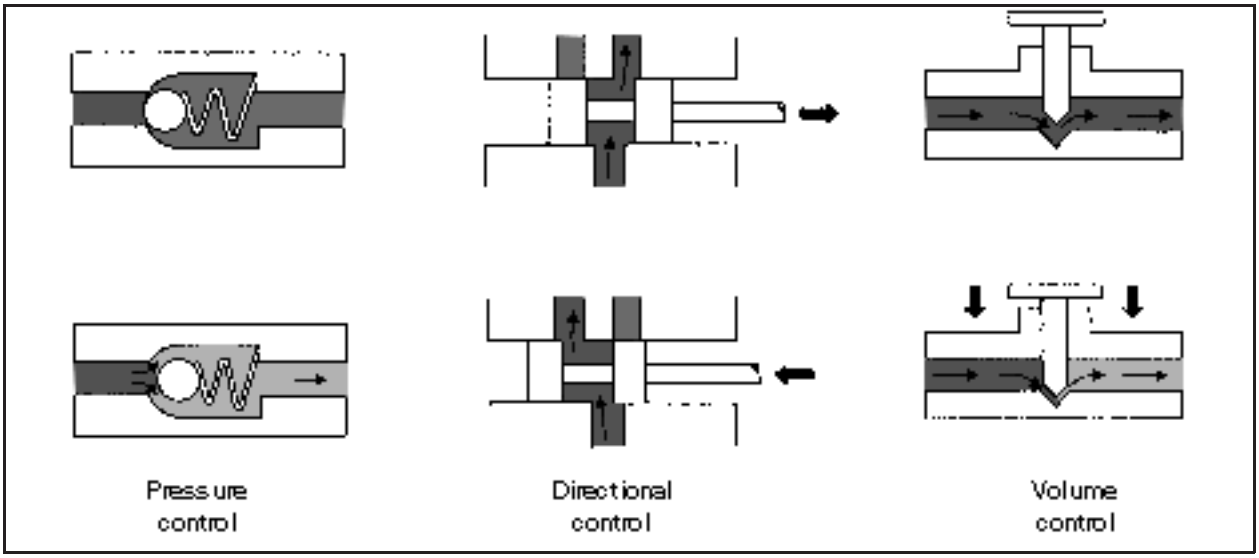

Figure 5-1. Valves

a. *Relief Valves.* Relief valves are the most common type of pressure-control valves. The relief valves' function may vary, depending on a system's needs. They can provide overload protection for circuit components or limit the force or torque exerted by a linear actuator or rotary motor.

The internal design of all relief valves is basically similar. The valves consist of two sections: a body section containing a piston that is retained on its seat by a spring(s), depending on the model, and a cover or pilot-valve section that hydraulically controls a body piston's movement. The adjusting screw adjusts this control within the range of the valves.

Valves that provide emergency overload protection do not operate as often since other valve types are used to load and unload a pump. However, relief valves should be cleaned regularly by reducing their pressure adjustments to flush out any possible sludge deposits that may accumulate. Operating under reduced pressure will clean out sludge deposits and ensure that the valves operate properly after the pressure is adjusted to its prescribed setting.

(1) Simple Type. Figure 5-2 shows a simple-type relief valve. This valve is installed so that one port is connected to the pressure line or the inlet and the other port to the reservoir. The ball is held on its seat by thrust of the spring, which can be changed by turning the adjusting screw. When pressure at the valve's inlet is insufficient to overcome spring force, the ball remains on its seat and the valve is closed, preventing flow through it. When pressure at the valve's inlet exceeds the adjusted spring force, the ball is forced off its seat and the valve is opened. Liquid flows from the pressure line through the valve to the reservoir. This diversion of flow prevents further pressure increase in the pressure line. When pressure decreases below the valve's setting, the spring reseats the ball and the valve is again closed.

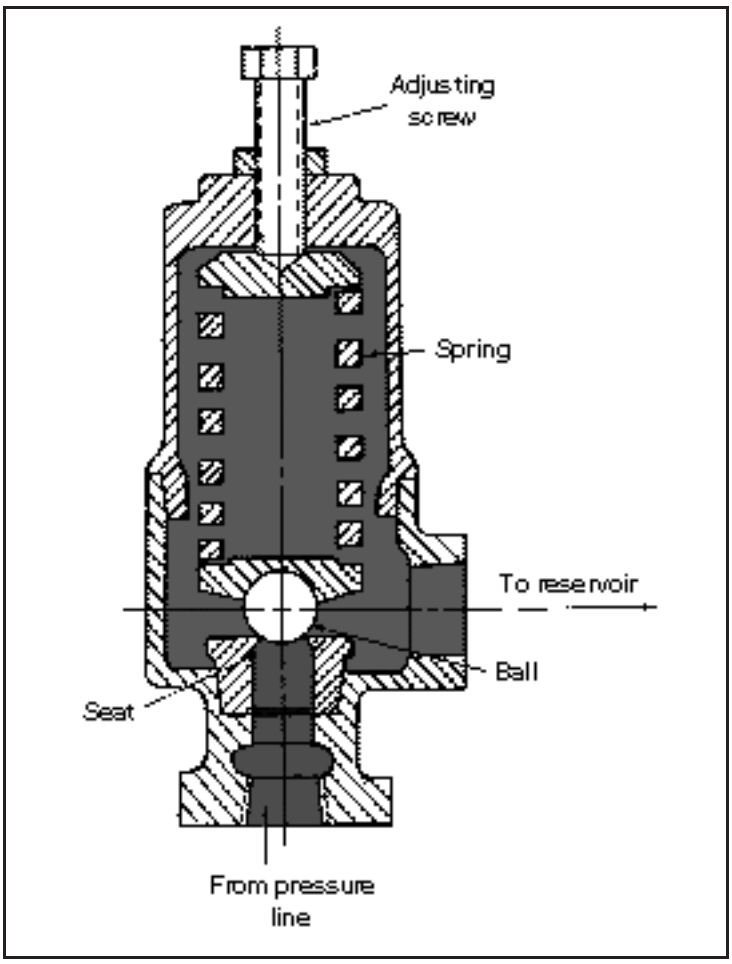

Figure 5-2. Simple relief valve

The pressure at which a valve first begins to pass flow is the cracking pressure of a valve. The pressure at which a valve passes its full-rated capacity is the full-flow pressure of a valve. Because of spring rate, a full-flow pressure is higher than a cracking pressure. This condition is referred to as pressure override. A disadvantage of a simple-type relief valve is its relatively high-pressure override at its rated capacity.

(2) Compound Type. Figure 5-3 shows a compound-type relief valve. Passage C is used to keep the piston in hydraulic balance when the valve's inlet pressure is less than its setting (diagram A). The valve setting is determined by an adjusted thrust of spring 3 against poppet 4. When pressure at the valve's inlet reaches the valve's setting, pressure in passage D also rises to overcome the thrust of spring 3. When flow through passage C creates a sufficient pressure drop to overcome the thrust of spring 2, the piston is raised off its seat (diagram B). This allows flow to pass through the discharge port to the reservoir and prevents further rise in pressure.

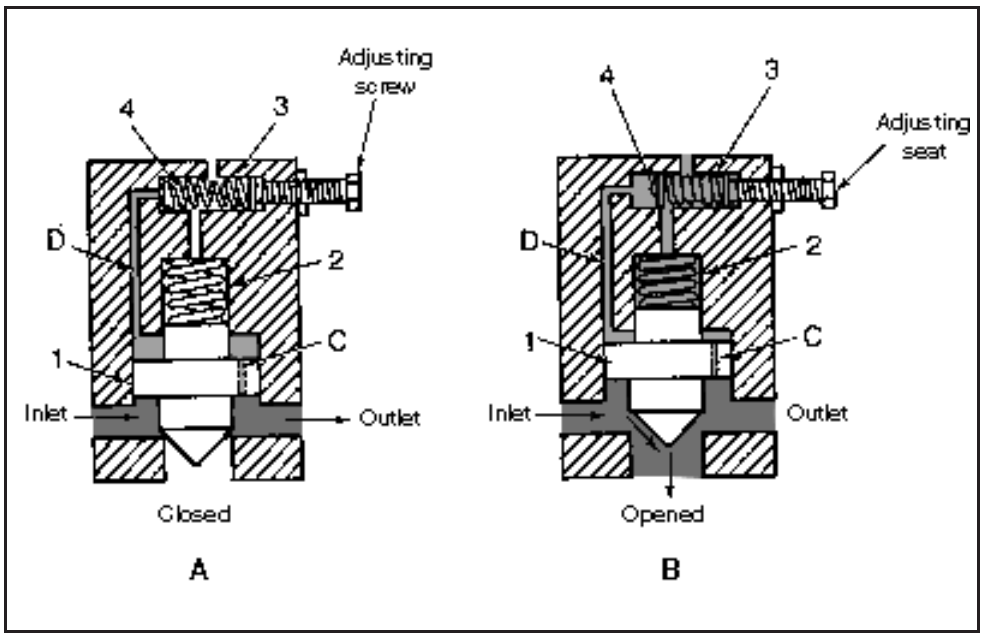

Figure 5-3. Compound relief valve

b. *Pressure-Reducing Valves.* These valves limit pressure on a branch circuit to a lesser amount than required in a main circuit. For example, in a system, a branch-circuit pressure is limited to 300 psi, but a main circuit must operate at 800 psi. A relief valve in a main circuit is adjusted to a setting above 800 psi to meet a main circuit's requirements. However, it would surpass a branch-circuit pressure of 300 psi. Therefore, besides a relief valve in a main circuit, a pressure-reducing valve must be installed in a branch circuit and set at 300 psi. Figure 5-4 shows a pressure-reducing valve.

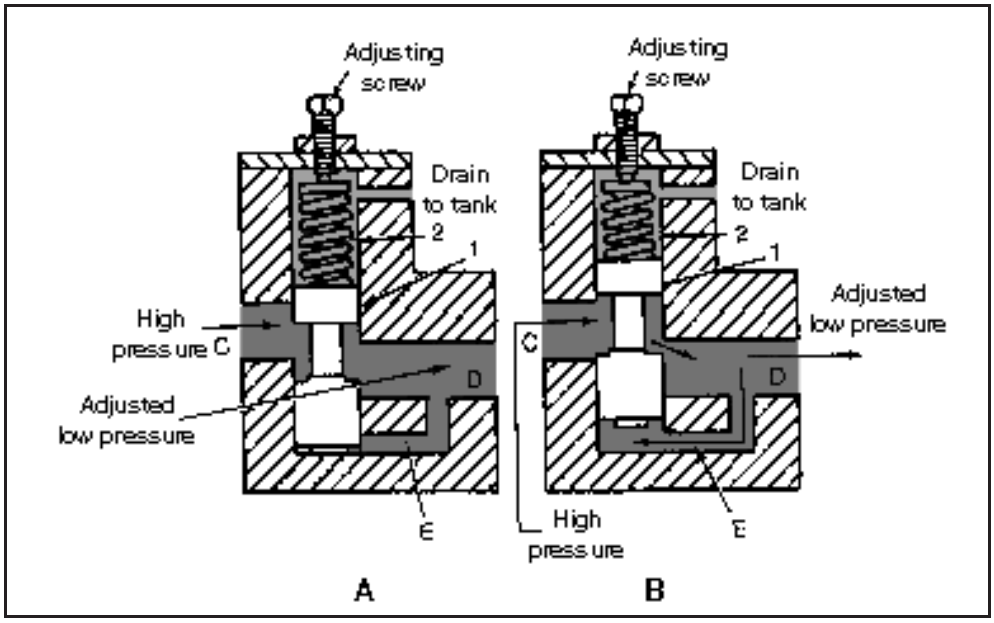

Figure 5-4. Pressure-reducing valve

In a pressure-reducing valve (diagram A), adjusting the spring's compression obtains the maximum branch-circuit pressure. The spring also holds spool 1 in

the open position. Liquid from the main circuit enters the valve at the inlet port C, flows past the valve spool, and enters the branch circuit through the outlet port D. Pressure at the outlet port acts through the passage E to the bottom of spool. If the pressure is insufficient to overcome the thrust of the spring, the valve remains open.

The pressure at the outlet port (diagram B) and under the spool exceeds the equivalent thrust of the spring. The spool rises and the valve is partially closed. This increases the valve's resistance to flow, creates a greater pressure drop through the valve, and reduces the pressure at the outlet port. The spool will position itself to limit maximum pressure at the outlet port regardless of pressure fluctuations at the inlet port, as long as workload does not cause back flow at the outlet port. Back flow would close the valve and pressure would increase.

(1) *X*-Series Type. Figure 5-5 shows the internal construction of an *X*-series pressure-reducing valve. The two major assemblies are an adjustable pilot-valve assembly in the cover, which determines the operating pressure of the valve, and a spool assembly in the body, which responds to the action of the pilot valve to limit maximum pressure at the outlet port.

The pilot-valve assembly consists of a poppet 1, spring 2, and adjusting screw 3. The position of the adjusting screw sets the spring load on the poppet, which determines the setting of the valve. The spool assembly consists of spool 4 and spring 5. The spring is a low-rate spring, which tends to force the spool downward and hold the valve open. The position of the spool determines the size of passage C.

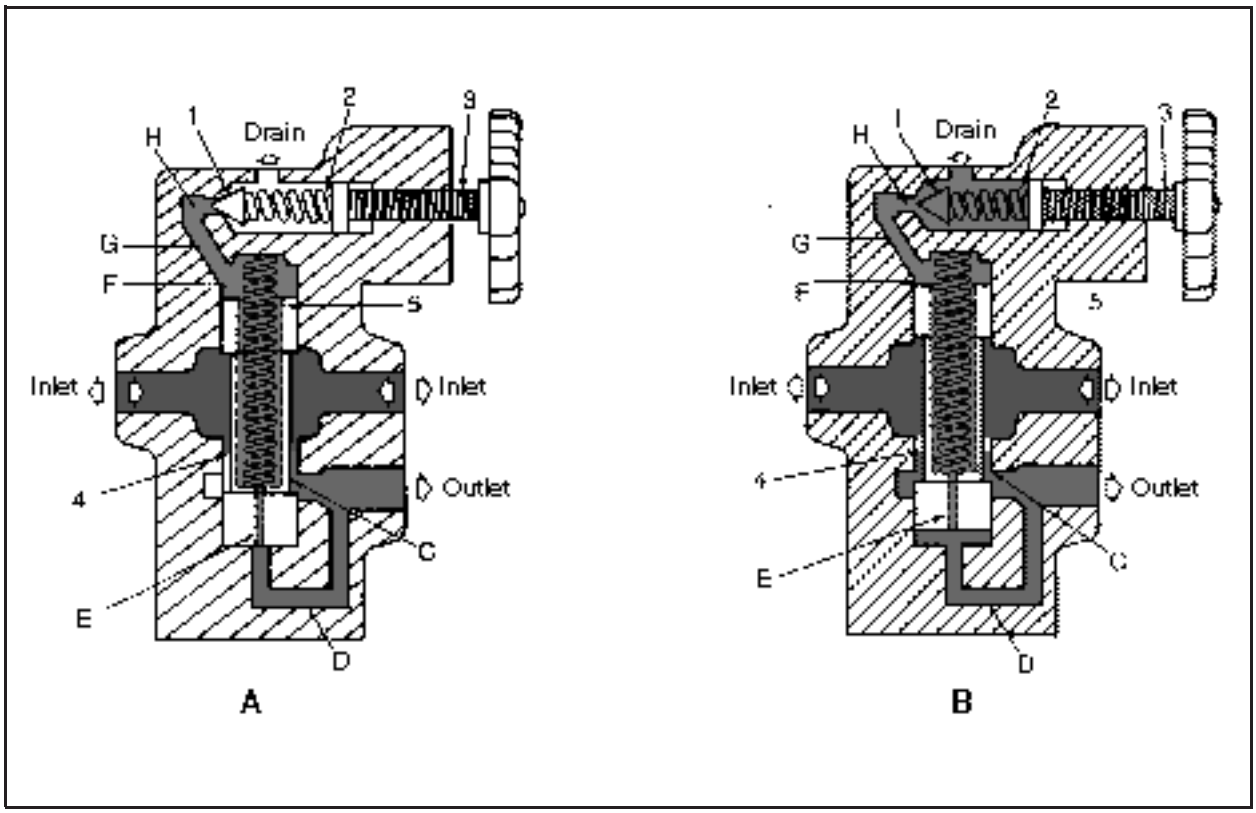

Figure 5-5. *X*-series, pressure-reducing valve

When pressure at the valve inlet (diagram A) does not exceed the pressure setting, the valve is completely open. Fluid passes from the inlet to the outlet with minimal resistance in the rated capacity of the valve. Passage D connects the outlet port to the bottom of the spool. Passage E connects the chambers at each end of the spool. Fluid pressure at the outlet port is present on both ends of the spool. When these pressures are equal, the spool is hydraulically balanced. The only effective force on the spool is the downward thrust of the spring, which positions the spool and tends to maintain passage C at its maximum size.

When the pressure at the valve's outlet (diagram B) approaches the pressure setting of the valve, the liquid's pressure in chamber H is sufficient to overcome the thrust of the spring and force the poppet off its seat. The pilot valve limits the pressure in chamber F. More pressure rises as the outlet pushes the spool upward against the combined force of the spring and the pressure in chamber F.

As the spool moves upward, it restricts the opening to create a pressure drop between the inlet and outlet ports. Pressure at the outlet is limited to the sum of the equivalent forces of springs 2 and 5. In normal operation, passage C never closes completely. Flow must pass through to meet any work requirements on the low-pressure side of the valve plus the flow required through passage E to maintain the pressure drop needed to hold the spool at the control position. Flow through restricted passage E is continual when the valve is controlling the reduced pressure. This flow is out the drain port and should be returned directly to the tank.

(2) *XC*-Series Type. An *XC*-series pressure-reducing valve limits pressure at the outlet in the same way the *X*-series does when flow is from its inlet port to its outlet port. An integral check valve allows reverse free flow from outlet to inlet port even at pressures above the valve setting. However, the same pressure-reducing action is not provided for this direction of flow. Figure 5-6 shows the internal construction of an *XC*-series valve.

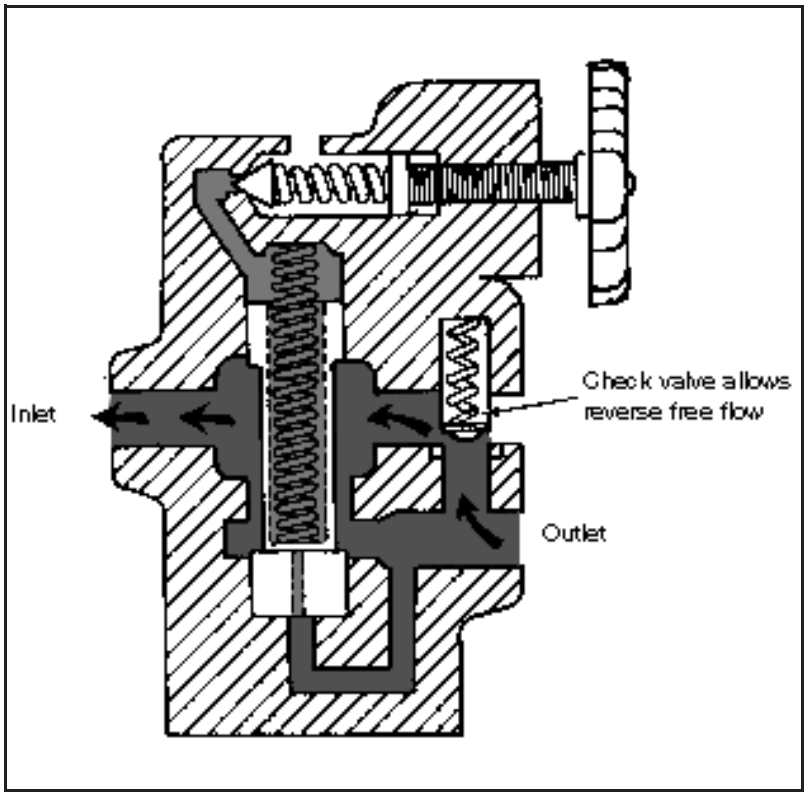

Figure 5-6. Internal construction of an *XC*-series valve

c. *Sequence Valves.* Sequence valves control the operating sequence between two branches of a circuit. The valves are commonly used to regulate an operating sequence of two separate work cylinders so that one cylinder begins stroking when the other completes stroking. Sequence valves used in this manner ensure that there is minimum pressure equal to its setting on the first cylinder during the subsequent operations at a lower pressure.

Figure 5-7, diagram A, shows how to obtain the operation of a sequencing pressure by adjusting a spring's compression, which holds piston 1 in the closed position. Liquid enters the valve at inlet port C, flows freely past piston 1, and enters the primary circuit through port D. When pressure of the liquid flowing through the valve is below the valve's setting, the force acting upward on piston 1 is less than the downward force of the spring 2. The piston is held down and the valve is in the closed position.

When resistance in the primary circuit causes the pressure to rise so it overcomes the force of spring 2, piston 1 rises. The valve is then open (Figure 5-7, diagram B). Liquid entering the valve can now flow through port E to the secondary circuit.

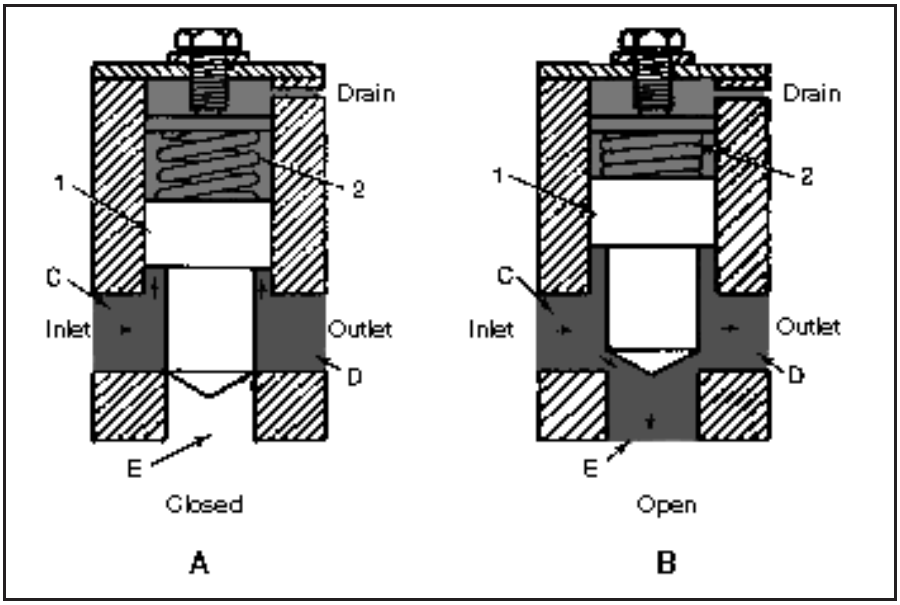

Figure 5-7. Sequence valve

Figure 5-8 shows an application of a sequence valve. The valve is set at a pressure in excess of that required to start cylinder 1 (primary cylinder). In its

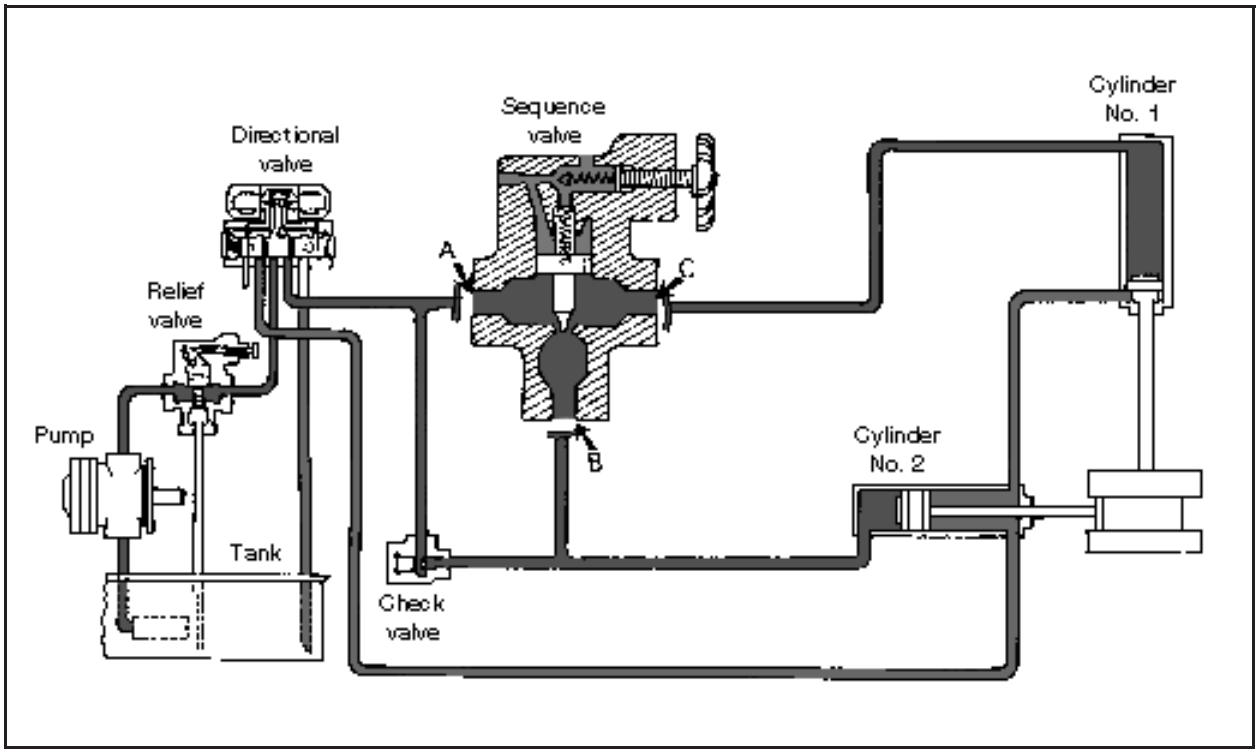

Figure 5-8. Application of sequence valve

first operating sequence, pump flow goes through ports A and C (primary ports) to force cylinder 1 to stroke. The valve stays closed because the pressure of cylinder 1 is below the valve's setting. When cylinder 1 finishes stroking, flow is blocked, and the system pressure instantly increases to the valve setting to open the valve. Pump flow then starts cylinder 2 (secondary cylinder).

During this phase, the flow of pilot oil through the balance orifice governs the position of the main piston. This piston throttles flow to port B (secondary port) so that pressure equal to the valve setting is maintained on the primary circuit during movement of cylinder 2 at a lower pressure. Back pressure created by the resistance of cylinder 2 cannot interfere with the throttling action because the secondary pressure below the stem of the main piston also is applied through the drain hole to the top of the stem and thereby canceled out. When cylinder 2 is retracted, the return flow from it bypasses the sequence valve through the check valve.

d. *Counterbalance Valves.* A counterbalance valve allows free flow of fluid in one direction and maintains a resistance to flow in another direction until a certain pressure is reached. A valve is normally located in a line between a directional-control valve and an outlet of a vertically mounted actuating cylinder, which supports weight or must be held in position for a period of time. A counterbalance valve serves as a hydraulic resistance to an actuating cylinder. For example, a counterbalance valve is used in some hydraulically operated fork lifts. It offers a resistance to the flow from an actuating cylinder when a fork is lowered. It also helps support a fork in the up position.

Figure 5-9 shows a counterbalance valve. The valve element is balance-spool valve 4 that consists of two pistons which are permanently fixed on either end of the shaft. The inner piston areas are equal; therefore, pressure acts equally on both areas regardless of the position of the valve, and has no effect on the movement of the valve, hence, the term balanced. A small pilot piston is attached to the bottom of the spool valve.

When the valve is in the closed position, the top piston of the spool valve blocks discharge port 8. If fluid from the actuating

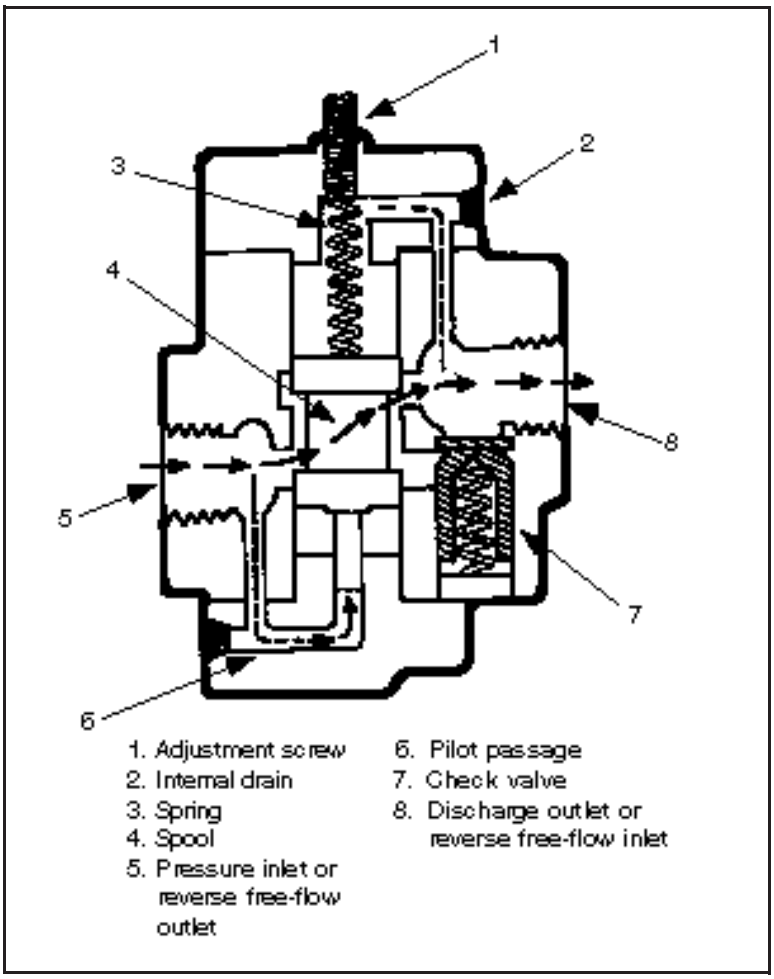

Figure 5-9. Counterbalance valve

unit enters inlet port 5, it cannot flow through the valve because discharge port 8 is blocked. However, fluid will flow through the pilot passage 6 to the small pilot piston. As the pressure increases, it acts on the pilot piston until it overcomes the preset pressure of spring 3. This forces the spool up and allows the fluid to flow around the shaft of the spool valve and out the discharge port 8.

During reverse flow, the fluid enters port 8. Spring 3 forces spool valve 4 to the closed position. The fluid pressure overcomes the spring tension of check valve 7. It opens and allows free flow around the shaft of the spool valve and out port 5. The operating pressure of the valve can be adjusted by turning adjustment screw 1, which increases or decreases the tension of the spring. This adjustment depends on the weight that the valve must support.

Small amounts of fluid will leak around the top piston of the spool valve and into the area around spring 3. An accumulation would cause a hydraulic lock on the top of the spool valve (since a liquid cannot be compressed). Drain 2 provides a passage for this fluid to flow to port 8.

e. *Pressure Switches.* Pressure switches are used in various applications that require an adjustable, pressure-actuated electrical switch to make or break an electrical circuit at a predetermined pressure. An electrical circuit may be used to actuate an electrically controlled valve or control an electric-motor starter or a signal light. Figure 5-10 shows a pressure switch. Liquid, under pressure, enters chamber A. If the pressure exceeds the adjusted pressure setting of the spring behind ball 1, the ball is unseated. The liquid flows into chamber B and moves piston 2 to the right, actuating the limit to make or break an electrical circuit.

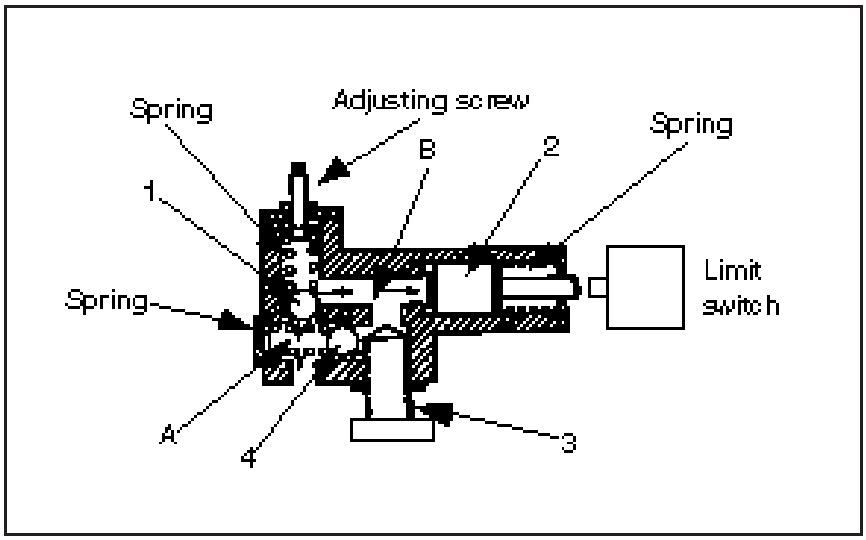

Figure 5-10. Pressure switch

When pressure in chamber A falls below the setting of the spring behind ball 1, the spring reseats ball 1. The liquid in chamber B is throttled past valve 3 and ball 4 because of the action of the spring behind piston 2. The time required for the limit switch to return to its normal position is determined by valve 3's setting.

5-2. Directional-Control Valves. Directional-control valves also control flow direction. However, they vary considerably in physical characteristics and operation. The valves may be a—

- Poppet type, in which a piston or ball moves on and off a seat.
- Rotary-spool type, in which a spool rotates about its axis.

- Sliding-spool type, in which a spool slides axially in a bore. In this type, a spool is often classified according to the flow conditions created when it is in the normal or neutral position. A closed-center spool blocks all valve ports from each other when in the normal position. In an open-center spool, all valve ports are open to each other when the spool is in the normal position.

Directional-control valves may also be classified according to the method used to actuate the valve element. A poppet-type valve is usually hydraulically operated. A rotary-spool type may be manually (lever or plunger action), mechanically (cam or trip action), or electrically (solenoid action) operated. A sliding-spool type may be manually, mechanically, electrically, or hydraulically operated, or it may be operated in combination.

Directional-control valves may also be classified according to the number of positions of the valve elements or the total number of flow paths provided in the extreme position. For example, a three-position, four-way valve has two extreme positions and a center or neutral position. In each of the two extreme positions, there are two flow paths, making a total of four flow paths.

Spool valves (see Figure 5-11) are popular on modern hydraulic systems because they—

- Can be precision-ground for fine-oil metering.
- Can be made to handle flows in many directions by adding extra lands and oil ports.
- Stack easily into one compact control package, which is important on mobile systems.

Spool valves, however, require good maintenance. Dirty oil will damage the mating surfaces of the valve lands, causing them to lose their accuracy. Dirt will cause these valves to stick or work erratically. Also, spool valves must be accurately machined and fitted to their bores.

a. *Poppet Valve*. Figure 5-12, page 5-10, shows a simple poppet valve. It consists primarily of a movable poppet that closes against a valve seat. Pressure from the inlet tends to hold the valve tightly closed. A slight force applied to the poppet stem opens the poppet. The action is similar to the valves of an automobile engine. The poppet stem usually has an *O*-ring seal to prevent leakage. In some valves, the poppets are held in the seated position by springs. The number of poppets in a valve depends on the purpose of the valve.

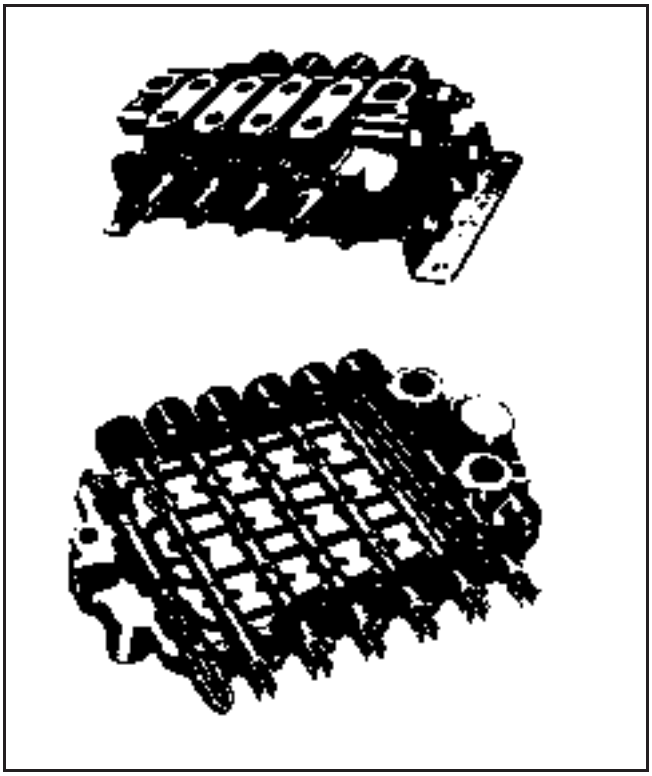

Figure 5-11. Spool valve

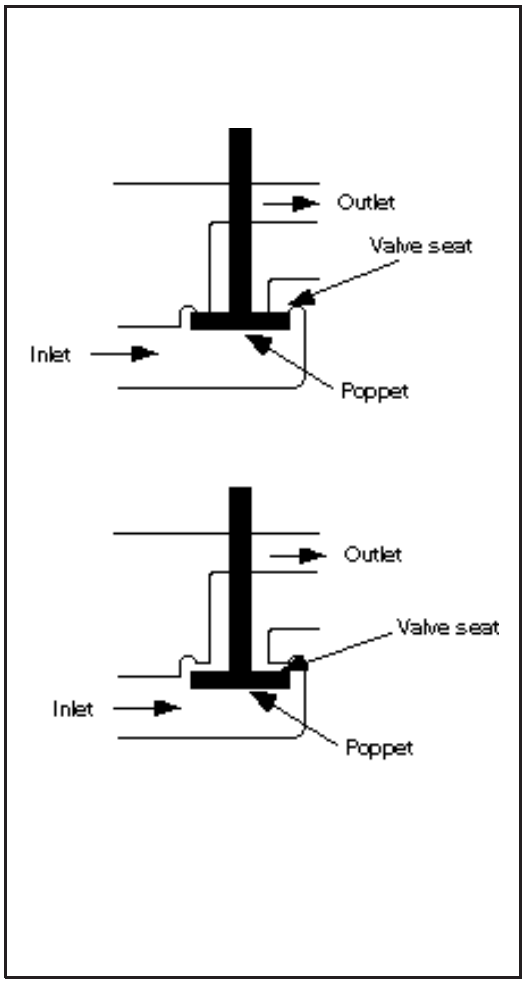

Figure 5-12. Operation of a simple poppet valve

b. *Sliding-Spool Valve.* Figure 5-13 shows a sliding-spool valve. The valve element slides back and forth to block and uncover ports in the housing. Sometimes called a piston type, the sliding-spool valve has a piston of which the inner areas are equal. Pressure from the inlet ports acts equally on both inner piston areas regardless of the position of the spool. Sealing is done by a machine fit between the spool and valve body or sleeve.

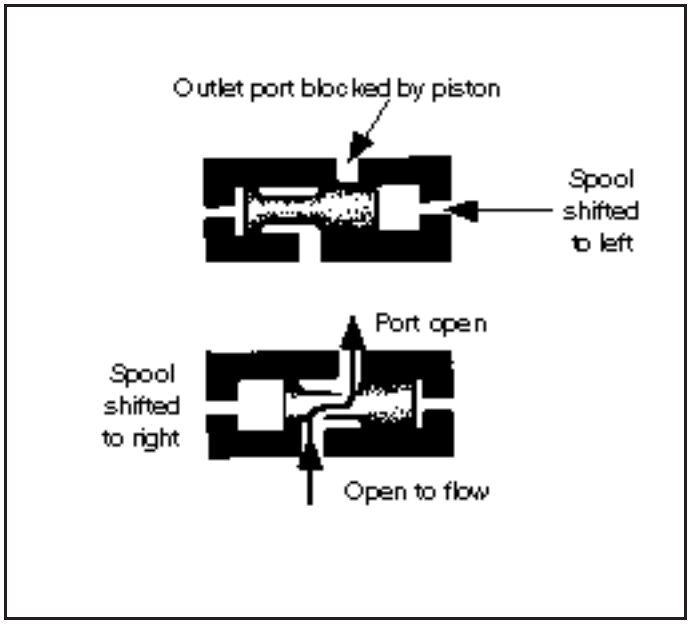

Figure 5-13. Operation of sliding-spool, directional-control valve

c. *Check Valves.* Check valves are the most commonly used in fluid-powered systems. They allow flow in one direction and prevent flow in the other direction. They may be installed independently in a line, or they may be incorporated as an integral part of a sequence, counterbalance, or pressure-reducing valve. The valve element may be a sleeve, cone, ball, poppet, piston, spool, or disc. Force of the moving fluid opens a check valve; backflow, a spring, or gravity closes the valve. Figures 5-14, 5-15 and 5-16 show various types of check valves.

(1) Standard Type (Figure 5-17, page 5-12). This valve may be a right-angle or an in-line type, depending on the relative location of the ports. Both types operate on the same principle. The valve consists essentially of a poppet or ball 1 held on a seat by the force of spring 2. Flow directed to the inlet port acts against spring 2 to unseat poppet 1 and open the valve for through flow (see Figure 5-17, diagram B, for both valve types). Flow entering the valve through the outlet port combines with spring action to hold poppet 1 on its seat to check reverse flow.

These valves are available with various cracking pressures. Conventional applications usually use the light spring because it ensures reseating the poppet regardless of the valve's

mounting position. Heavy spring units are generally used to ensure the availability of at least the minimum pressure required for pilot operations.

(2) Restriction Type (Figure 5-18, page 5-12). This valve has orifice plug 1 in the nose of poppet 2, which makes it different from a conventional, right-angle check valve. Flow directed to the inlet port opens the valve, allowing free flow through the valve. Reverse flow directed in through the outlet port seats poppet 2. Flow is restricted to the amount of oil, which can be altered, to allow a suitable bleed when the poppet is closed. Uses of a restriction check valve can be to control the lowering speed of a down-moving piston and the rate of decompression in large presses.

(3) Pilot-Operated Type (Figure 5-19, page 5-13). In diagram A, the valve has poppet 1 seated on stationary sleeve 2 by spring 3. This valve opens the same as a conventional check valve. Pressure at the inlet ports must be sufficient to overcome the combined forces of any pressure at the outlet port and the light thrust of spring 3 so that poppet 1 raises and allows flow from the inlet ports through the outlet port. In this situation, there is no pressure required at the pilot port.

In diagram B, the valve is closed to prevent reverse flow. Pressure at the outlet port and the thrust of spring 3 hold poppet 1 on its seat to block the flow. In this case, the pilot port has no pressure.

In diagram C, pressure applied at the pilot port is sufficient to overcome the thrust of spring 3. The net forces exerted

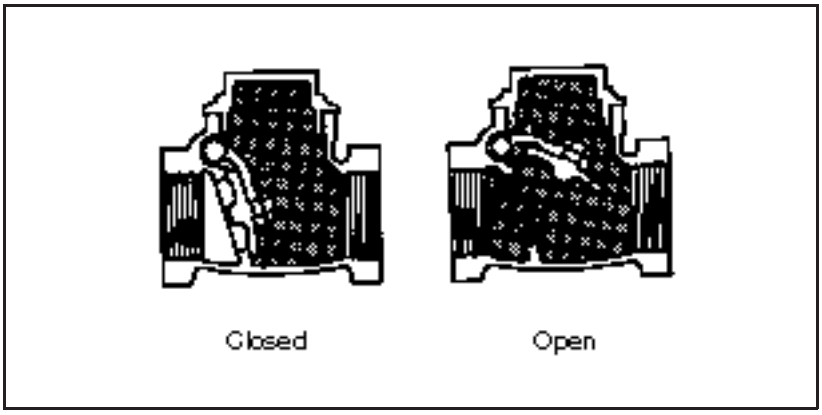

Figure 5-14. Swing-type check valve

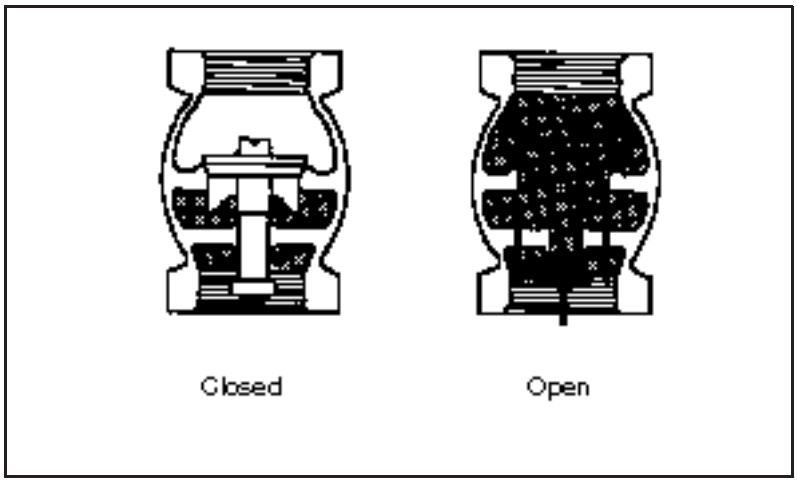

Figure 5-15. Vertical check valve

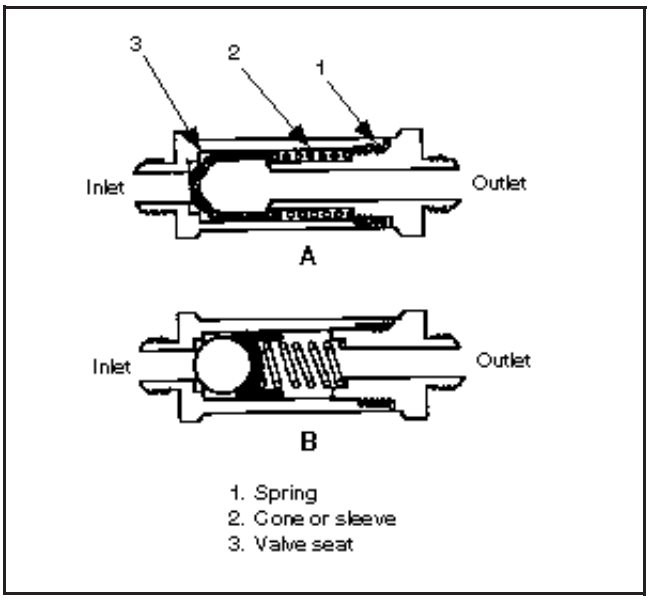

Figure 5-16. Spring-loaded check valve

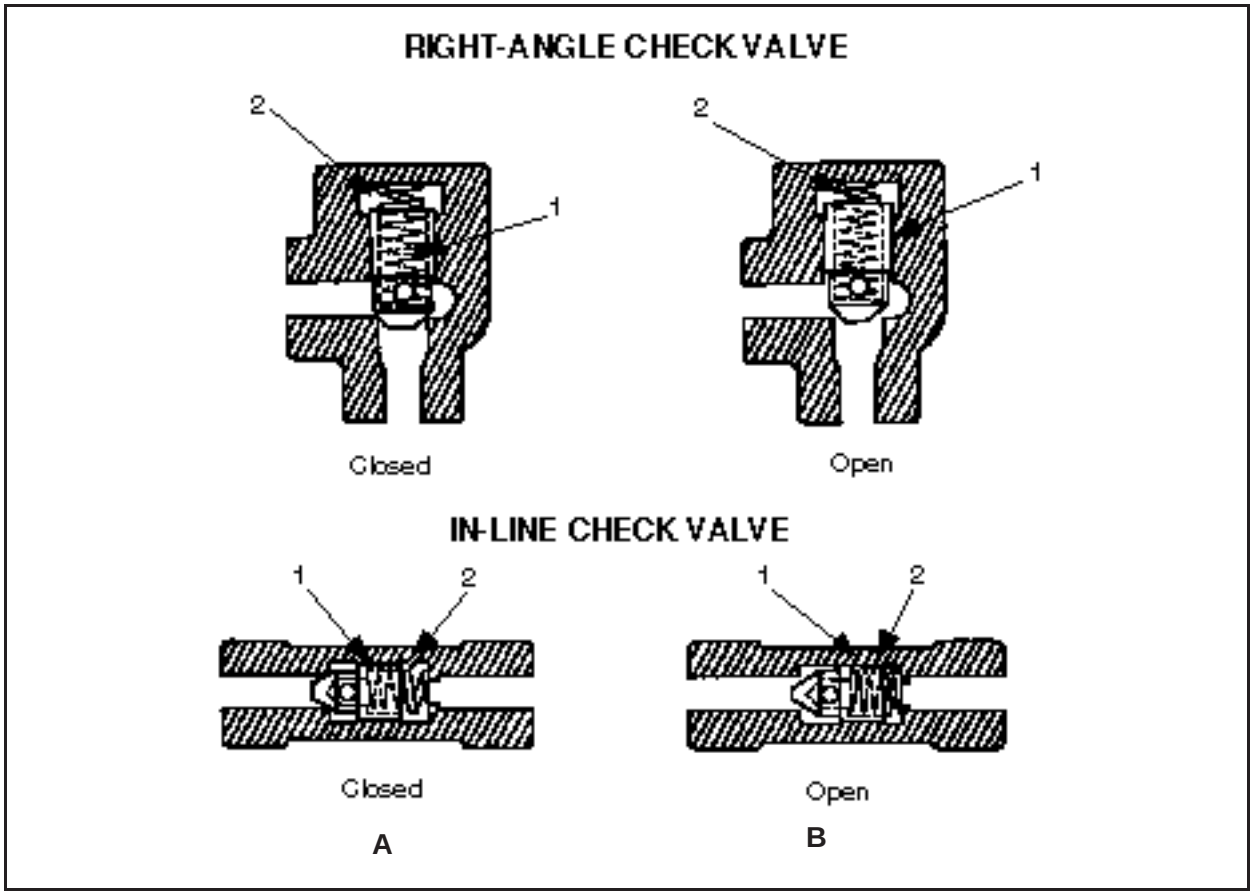

Figure 5-17. Standard check valve

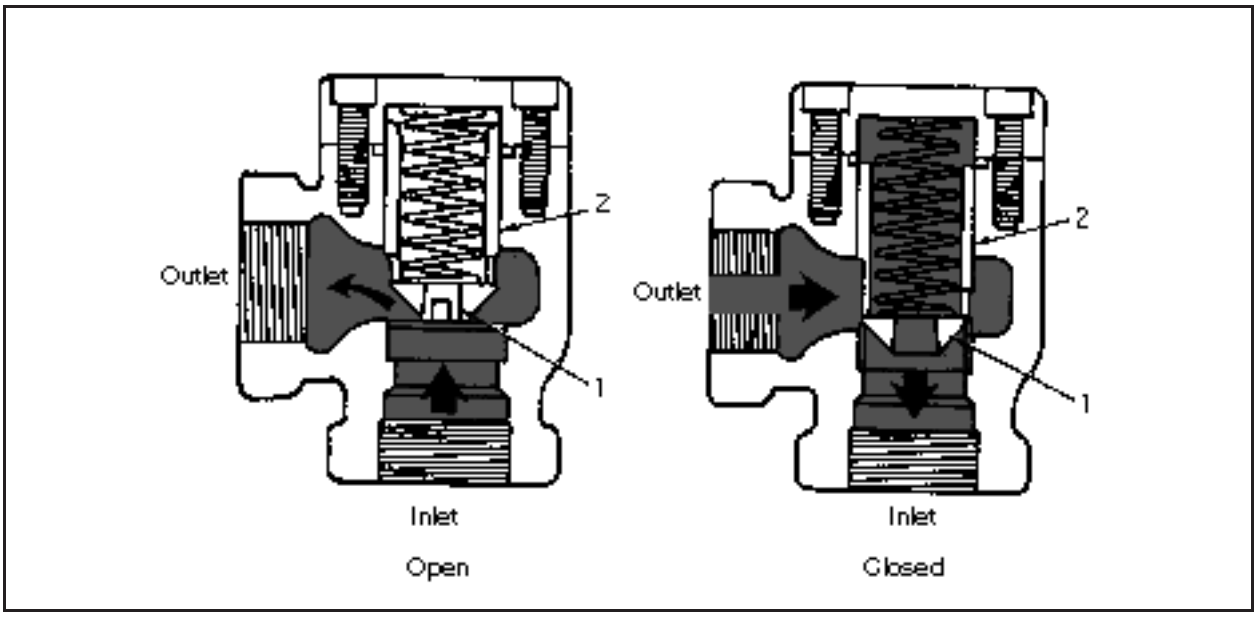

Figure 5-18. Restriction check valve

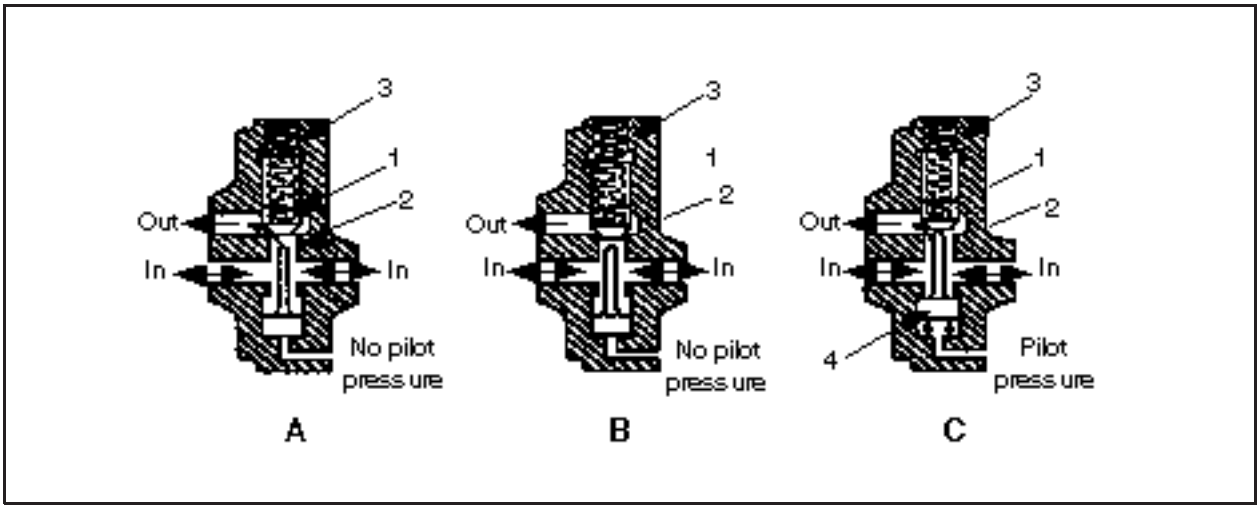

Figure 5-19. Pilot-operated check valve

by pressures at the other ports raise piston 4 to unseat poppet 1 and allow controlled flow from the outlet to the inlet ports. With no pressure at the inlet ports, pilot pressure must exceed 40 percent of that imposed at outlet to open the poppet.

Figure 5-20 shows another pilot-operated check valve. This valve consists of poppet 1 secured to piston 3. Poppet 1 is held against seat 4 by the action of spring 2 on piston 3. In diagram A, the valve is in the free-flow position. Pressure at the inlet port, acting downward against poppet 1, is sufficient to overcome the combined forces of spring 2 against piston 3 and the pressure, if any, at the outlet port. (The pressure at the outlet port is exerted over a greater effective area than that at the inlet because of the poppet stem.) The drain post is open to the tank, and there is no pressure at the pilot port. Diagram B shows the valve in a position to prevent reverse flow, with no pressure at the pilot port and the drain opening to the tank.

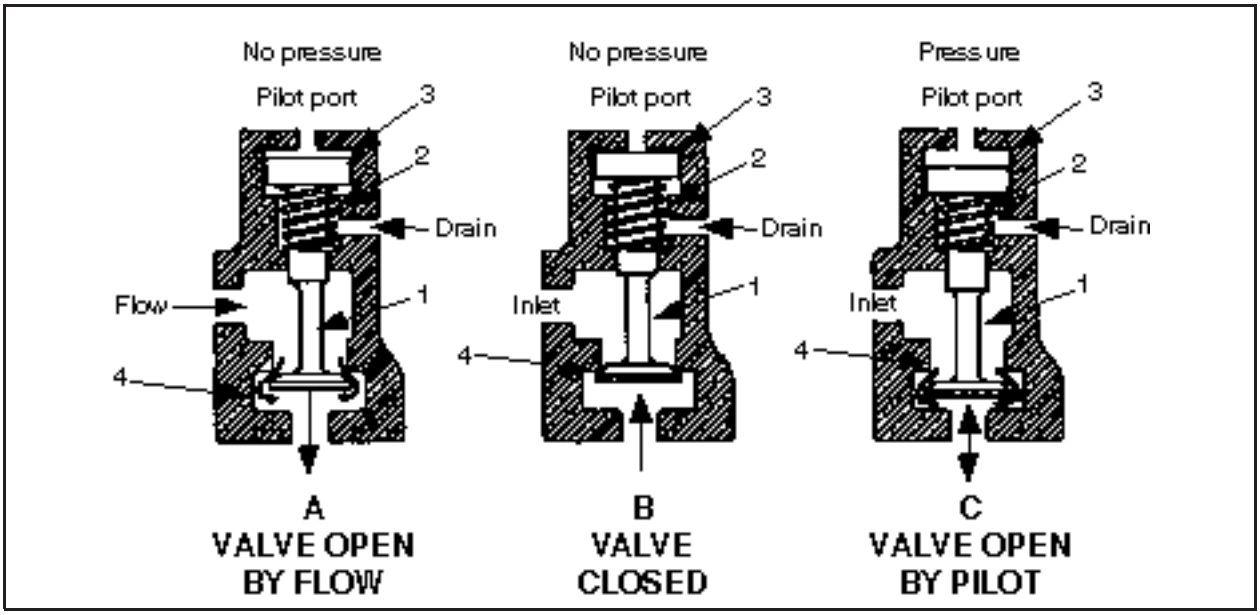

Figure 5-20. Pilot-operated check valve, second type

Diagram C shows the pilot operation of the valve. When sufficient pressure is applied at the pilot port to overcome the thrust of spring 2 plus the net effect of pressure at the other ports, poppet 1 is unseated to allow reverse flow. Pilot pressure must be equal to about 80 percent of that imposed at the outlet port to open the valve and allow reverse flow.

d. *Two-Way Valve.* A two-way valve is generally used to control the direction of fluid flow in a hydraulic circuit and is a sliding-spool type. Figure 5-21 shows a two-way, sliding-spool, directional-control valve. As the spool moves back and forth, it either allows or prevents fluid flow through the valve. In either shifted position in a two-way valve, a pressure port is open to one cylinder port, but the opposite cylinder port is not open to a tank. A tank port on this valve is used primarily for draining.

e. *Four-Way Valves.* Four-way, directional-control valves are used to control the direction of fluid flow in a hydraulic circuit, which controls the direction of movement of a work cylinder or the rotation of a fluid motor. These valves are usually the sliding-spool type. A typical four-way, directional-control valve has four ports:

- One pressure port is connected to a pressure line.
- One return or exhaust port is connected to a reservoir.
- Two working ports are connected, by lines, to an actuating unit.

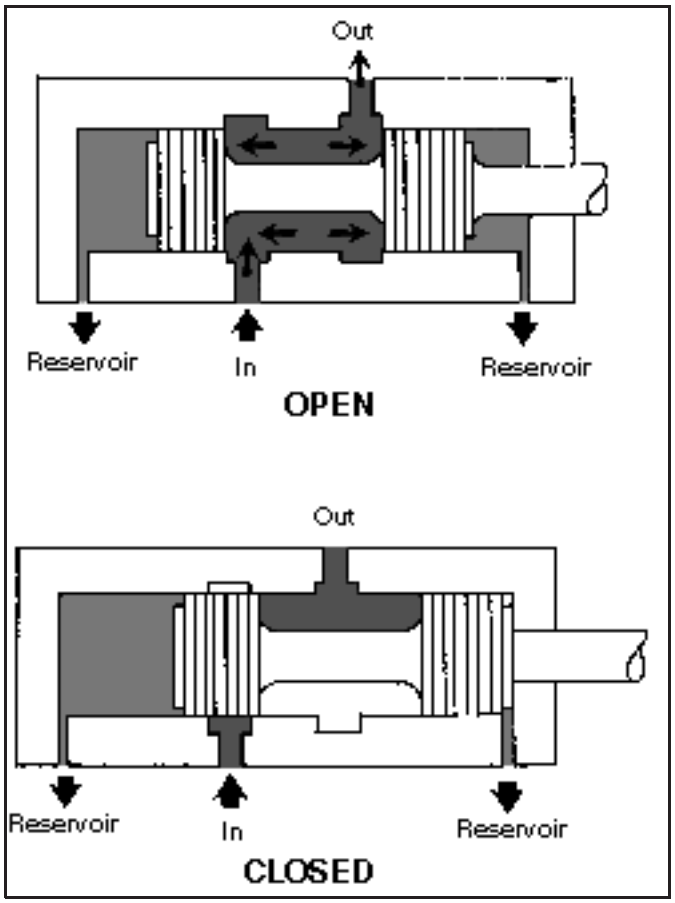

Figure 5-21. Two-way valve

Four-way valves consist of a rectangular cast body, a sliding spool, and a way to position a spool. A spool is precision-fitted to a bore through the longitudinal axis of a valve's body. The lands of a spool divide this bore into a series of separate chambers. Ports in a valve's body lead into a chamber so that a spool's position determines which ports are open to each other and which ones are sealed off from each other. Ports that are sealed off from each other in one position may be interconnected in another position. Spool positioning is accomplished manually, mechanically, electrically, or hydraulically or by combing any of the four.

Figure 5-22 shows how the spool position determines the possible flow conditions in the circuit. The four ports are marked P, T, A, and B: P is connected to the flow source; T to the tank; and A and B to the respective ports of the work cylinder, hydraulic motor, or some other valve in the circuit. In diagram A, the spool is in such a position that port P is open to port A, and port B is open to port T. Ports A and B are connected to the ports of the cylinder, flow through port P, and cause

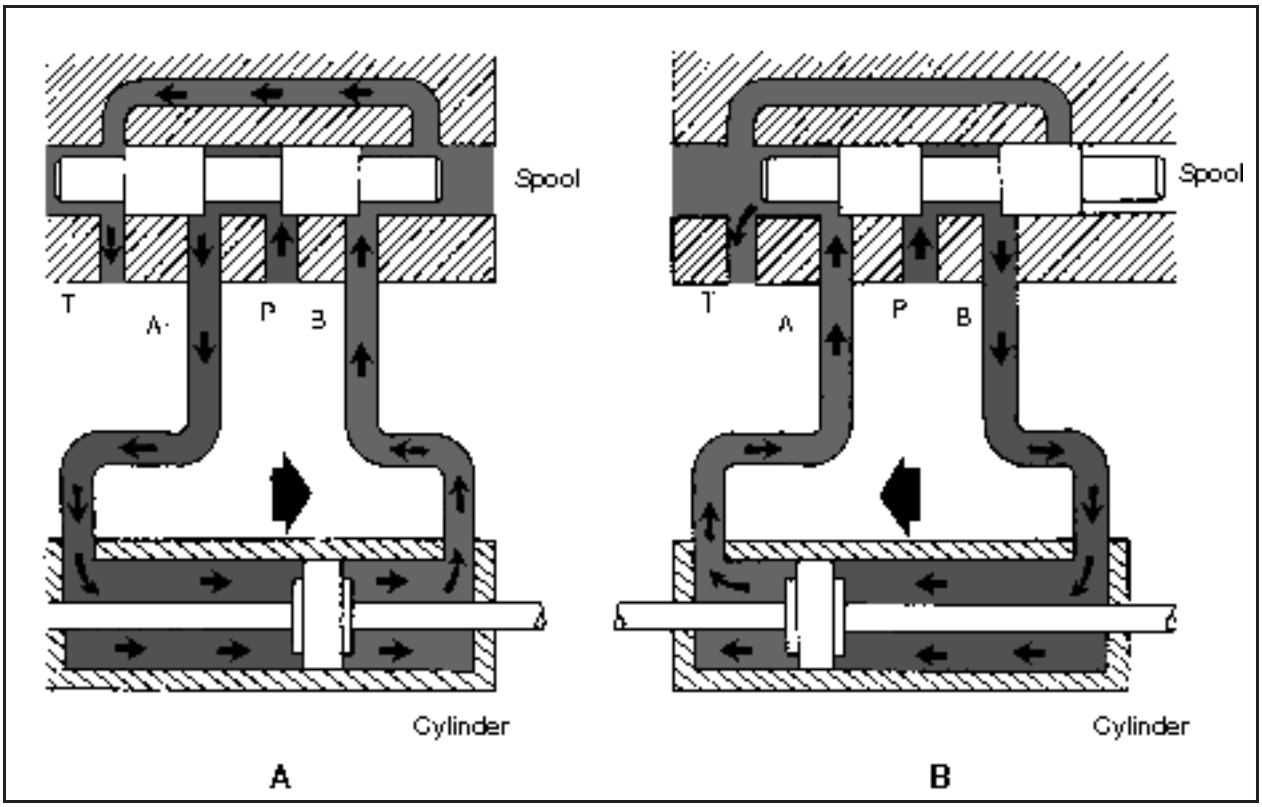

Figure 5-22. Flow conditions in a circuit

the piston of the cylinder to move to the right. Return flow from the cylinder passes through ports B and T. In diagram B, port P is open to port B, and the piston moves to the left. Return flow from the cylinder passes through ports A and T.

Table 5-1, page 5-16, lists some of the classifications of directional-control valves. These valves could be identified according to the—

- Number of spool positions.
- Number of flow paths in the extreme positions.
- Flow pattern in the center or crossover position.
- Method of shifting a spool.
- Method of providing spool return.

(1) Poppet-Type Valve. Figure 5-23, page 5-16, shows a typical four-way, poppet-type, directional-control valve. It is a manually operated valve and consists of a group of conventional spring-loaded poppets. The poppets are enclosed in a common housing and are interconnected by ducts so as to direct the fluid flow in the desired direction.

The poppets are actuated by cams on the camshaft. They are arranged so that the shaft, which is rotated by its controlling lever, will open the correct poppet combinations to direct the fluid flow through the desired line to the actuating unit. At the same time, fluid will be directed from the opposite line of the actuating unit through the valve and back to the reservoir or exhausted to the atmosphere.

Table 5-1. Classifications of directional-control valves

Classification		Description
Path-of-flow type	Two way Four way	Allows a total of two possible flow paths in two extreme spool positions Allows a total of four possible flow paths in two extreme spool positions
Control type	Manual operated Pilot operated Solenoid operated Solenoid controlled, pilot operated	Hand lever is used to shift the spool. Hydraulic pressure is used to shift the spool. Solenoid action is used to shift the spool. Solenoid action is used to shift the integral pilot spool, which directs the pilot flow to shift the main spool.
Position type	Two position Three position	Spool has two extreme positions of dwell. Spool has two extreme positions plus one intermediate or center position.
Spring type	Spring offset No spring Spring centered	Spring action automatically returns the spool to the normal offset position as soon as shifter force is released. (Spring offset is always a two-way valve.) Spool is not spring-loaded; it is moved only by shifter force, and it remains where it is shifted (may be two- or three-position type, but three-position type uses detent). Spring action automatically returns the spool to the center position as soon as the shifter force is released. (Spring-centered is always a three-position valve.)
Spool type	Open center Closed center Tandem center Partially closed center Semi-open center	These are five of the more common spool types. They refer to the flow pattern allowed when the spool is in the center position (three-position valves) or in the cross-over position (two-position valves).

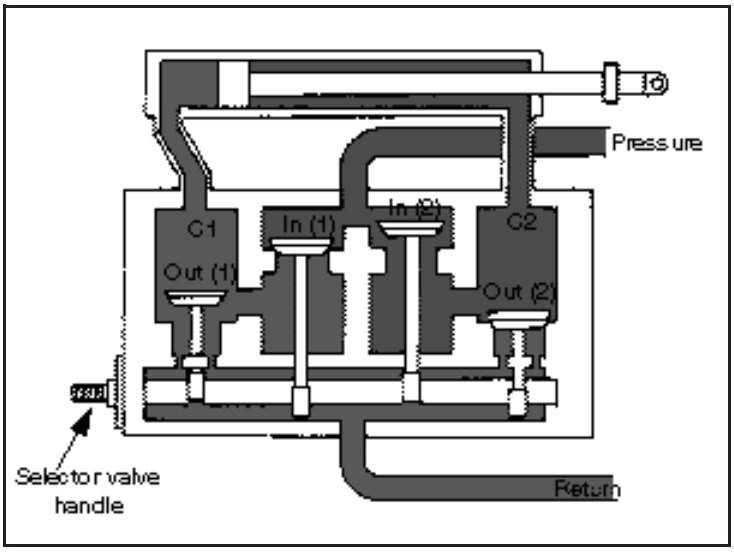

Figure 5-23. Working view of poppet-type, four-way valve

Springs hold the poppets to their seats. A camshaft unseats them to allow fluid flow through the valve. The camshaft is controlled by moving the handle. The valve is operated by moving the handle manually or by connecting the handle, by mechanical linkage, to a control handle. On the camshaft are three *O*-ring packings to prevent internal and external leakage. The camshaft has two lobes (raised portions). The contour (shape) of these lobes is such that when the shaft is placed in the neutral position, the lobes will not touch any of the poppets.

One cam lobe operates the two pressure poppets; the other lobe operates the two return/exhaust poppets. To stop the rotating camshaft at the exact position, a stop pin is secured to the body and extended through a cutout section of the camshaft flange. This stop pin prevents overtravel by ensuring that the cam lobes stop rotating when the poppets have unseated as high as they can go.

Figure 5-23 shows a working view of a poppet-type, four-way valve. The camshaft rotates by moving the control handle in either direction from neutral. The lobes rotate, unseating one pressure poppet and one return/exhaust poppet. The valve is now in a working position. Pressure fluid, entering the pressure port, travels through the vertical fluid passages in both pressure poppet seats. Since only one pressure poppet is unseated by the cam lobe, the fluid flows past the open poppet to the inside of the poppet seat. It then flows out one working port and to the actuating unit. Return fluid from the actuating unit enters the other working port. It then flows through the diagonal fluid passages, past the unseated return poppet, through the vertical fluid passages, and out the return/exhaust port. By rotating the camshaft in the opposite direction until the stop pin hits, the opposite pressure and return poppets are unseated, and the fluid flow is reversed. This causes the actuating unit to move in the opposite direction.

(2) Sliding-Spool Valve. The four-way, sliding-spool, directional-control valve is simple in operation principle and is probably the most durable and trouble free of all four-way, directional-control valves in current use. Figure 5-24 shows a typical four-way, sliding-spool, directional-control valve. The valve body contains four fluid ports: pressure, return/exhaust, and two working ports (referred to as cylinder ports). A hollow steel sleeve fits into the main bore of the body. Around the outside diameter of the sleeve are *O*-ring gaskets. These *O*-rings form a seal between the sleeve and the body.

In Figure 5-24, diagram A, the valve is at the far right in its cylinder. Liquid from the pump flows to the right end of the cylinder port, while liquid from the left end returns to the reservoir. In diagram C, the situation is reverse. The piston is to the far left in its cylinder. Liquid from the pump flows to the left end of the cylinder port, while liquid from the right end returns to the reservoir. In diagram B, the piston is in an intermediate position. Flow through the valve from the pump is shut off, and both ends of the cylinder can drain to the

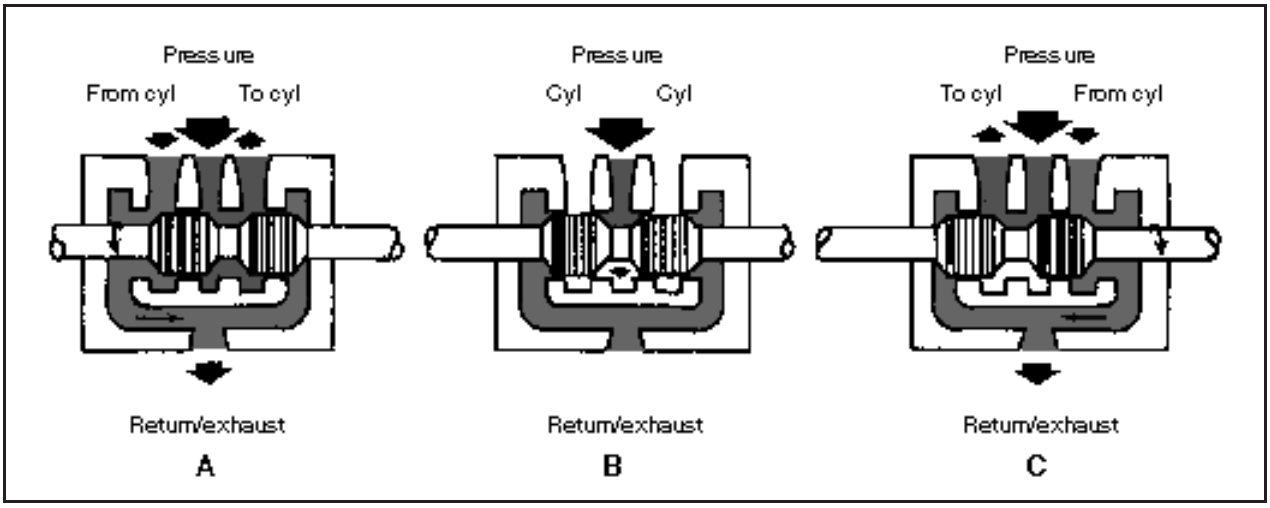

Figure 5-24. Schematic of a four-way, directional-control, sliding-spool valve

reservoir unless other valves are set to control the flow.

In a closed-center spool valve, a piston is solid, and all passages through a valve are blocked when a piston is centered in its cylinder (see Figure 5-24, diagram B). A closed-center valve is used when a single pump or an accumulator performs more than one operation and where there must be no pressure loss in shifting a stroke direction at a work point.

In an open-center spool valve, the spools on a piston are slotted or channeled so that all

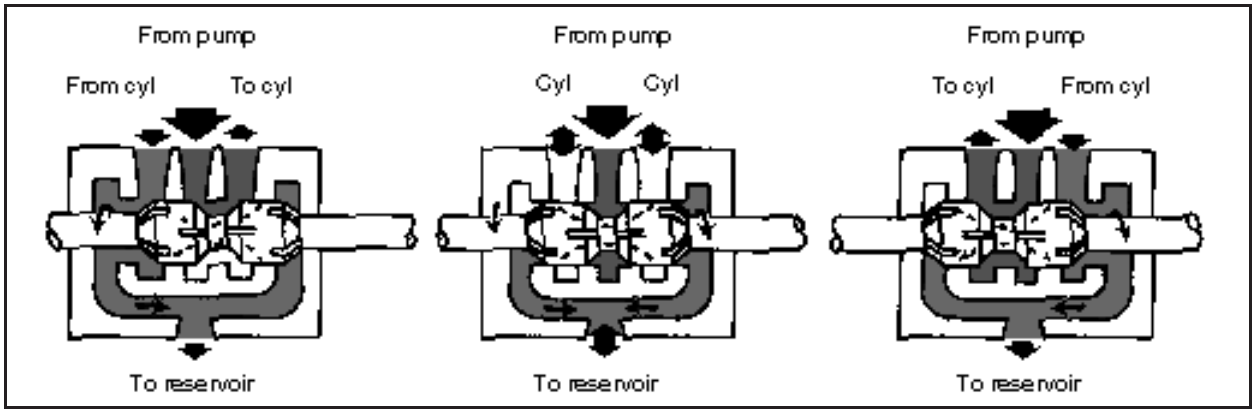

Figure 5-25. Closed-center spool valve

passages are open to each other when a piston is centered (see Figure 5-25). In some open-center valves, passages to a cylinder port are blocked when a valve is centered and liquid from a pump is carried through a piston and out the other side of a valve to a reservoir (see Figure 5-26). Liquid must be carried to both ends of a piston of a directional valve to keep it balanced. Instead of discharging into a reservoir when a valve is centered, liquid may be directed to other valves so that a set of operations is performed in sequence.

Open-center valves are used when a work cylinder does not have to be held in position by pressure and where power is used to perform a single operation. These valves also avoid shock to a system when a valve spool is moved from one position to another, since in the intermediate

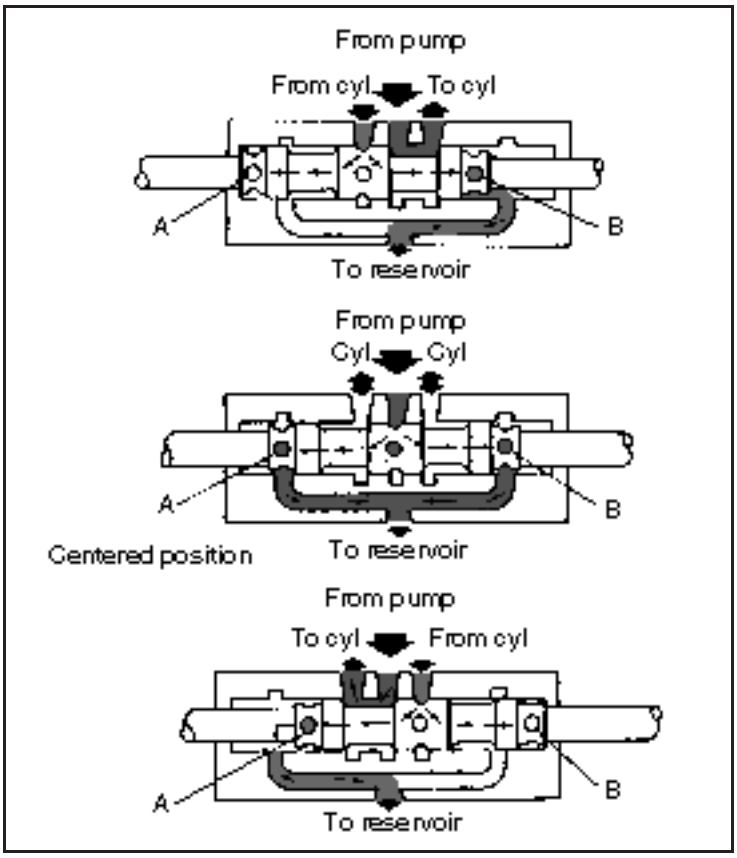

Figure 5-26. Open-center spool valve

position, pressure is temporarily relieved by liquid passing from a pump directly to the reservoir.

(3). Manually Operated Four-Way Valve. This valve is used to control the flow direction manually. A spool is shifted by operating a hand lever (Figure 5-27, page 5-20). In a spring-offset model, a spool is normally in an extreme out position and is shifted to an extreme in position by moving a lever toward a valve. Spring action automatically returns both spool and lever to the normal out position when a lever is released. In a two-position, no-spring model, a spool is shifted back to its original position. (Figure 5-27 does not show this valve.) In a three-position no-spring model, a detent (a devise which locks the movement) retains a spool in any one of the three selected positions after lever force is released. In a three-position, spring-centered model, a lever is used to shift a spool to either extreme position away from the center. Spring action automatically returns a spool to the center position when a lever is released.

(4) Pilot-Operated, Four-Way Valve. This type of valve is used to control the flow direction by using a pilot pressure. Figure 5-28, page 5-21, shows two units in which the spool is shifted by applying the pilot pressure at either end of the spool. In the spring-offset model, the spool is held in its normal offset position by spring thrust and shifted to its other position by applying pilot pressure to the free end of the spool. Removing pilot pressure shifts the spool back to its normal offset position. A detent does not hold this valve, so pilot pressure should be maintained as long as the valve is in the shifted position.

(5) Solenoid-Operated, Two- and Four-Way Valves. These valves are used to control the direction of hydraulic flow by electrical means. A spool is shifted by energizing a solenoid that is located at one or both ends of the spool. When a solenoid is energized, it forces a push rod against the end of a spool. A spool shifts away from the solenoid and toward the opposite end of the valve body (see Figure 5-29, page 5-21). In a spring-offset model, a single solenoid shifts a spring-loaded spool. When a solenoid is deenergized, a spring returns a spool to its original position.

5-3. Flow-Control Valves. Flow-control valves are used to control an actuator's speed by metering flow. Metering is measuring or regulating the flow rate to or from an actuator. A water faucet is an example of a flow-control valve. Flow rate varies as a faucet handle is turned clockwise or counterclockwise. In a closed position, flow stops. Many flow-control valves used in fluid-powered systems are similar in design and operation to a water faucet's.

In hydraulic circuits, flow-control valves are generally used to control the speed of hydraulic motors and work spindles and the travel rates of tool heads or slides. Flow-control valves incorporate an integral pressure compensator, which causes the flow rate to remain substantially uniform regardless of changes in workload. A nonpressure, compensated flow control, such as a needle valve or fixed restriction, allows changes in the flow rate when pressure drop through it changes.

Variations of the basic flow-control valves are the flow-control-and-check valves and the flow-control-and-overload relief valves. Models in the flow-control-and-check-valve series incorporate an integral check valve to allow reverse free flow. Models in the flow-control-and-overload-relief-valve series incorporate an integral relief valve to limit system pressure. Some of these valves are gasket-mounted, and some are panel-mounted.

TYPE	EXTREME "OUT" POSITION	CENTER POSITION	EXTREME "IN" POSITION
Spring offset	Pressure P → cyl A cyl B → tank T P A T B Open-center and closed-center types	There is no center position in spring-offset models	Pressure P → cyl B cyl A → tank T P A T B Open-center and closed-center types
	Pressure P → cyl A cyl B → tank T P A T B Open-center type	Pressure P cyl A and cyl B → tank T P A T B Open-center type	
Spring centered and no spring	Pressure P → cyl A cyl B → tank T P A T B Closed-center type	Pressure P cyl A and cyl B blocked P A T B Closed-center type	Pressure P → cyl B cyl A → tank T P A T B Open-center, closed-center, and S1 center types
	Pressure P → cyl A cyl B → tank T P A T B S1-center type	Pressure P and cyl A → tank T cyl B blocked P A T B S1-center type	
	Pressure P → cyl B cyl A → tank T P A T B Tandem-center type	Pressure P → tank T cyl A and cyl B blocked P A T B Tandem-center type	Pressure P → cyl A cyl B → tank T P A T B Tandem-center type

Figure 5-27. Shifting spool by hand lever

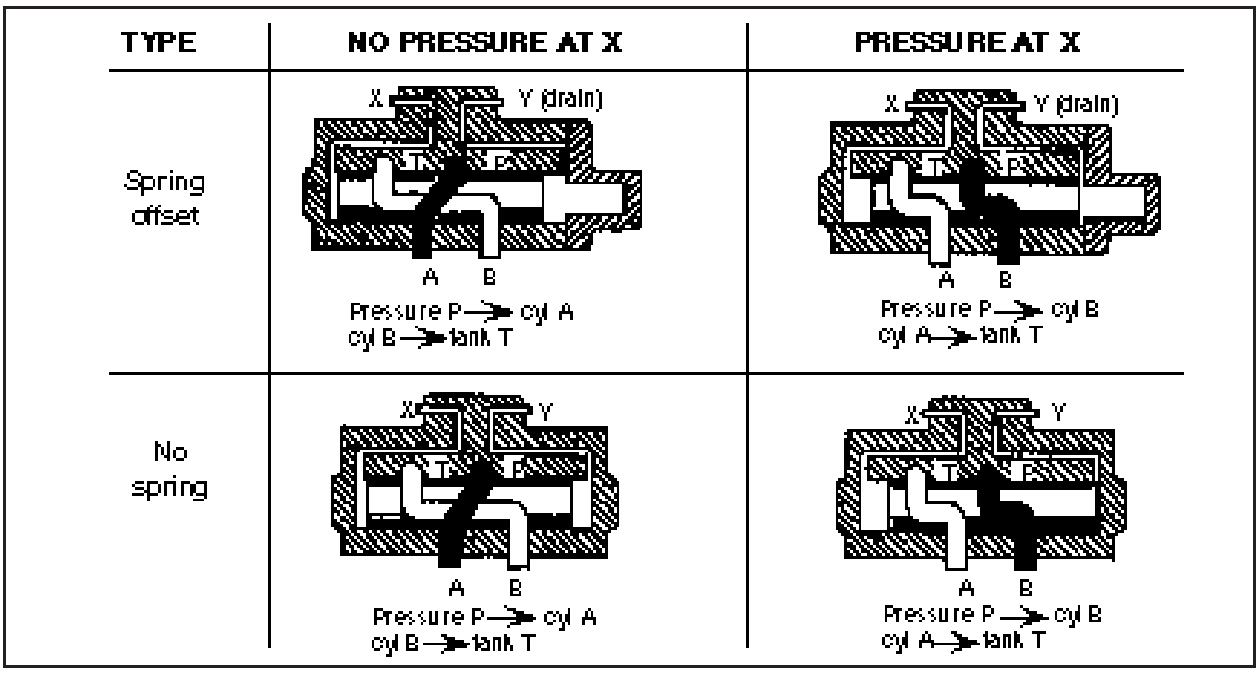

Figure 5-28. Spool shifted by pilot pressure

a. *Gate Valve.* In this type of valve, a wedge or gate controls the flow. To open and close a passage, a handwheel moves a wedge or gate up and down across a flow line. Figure 5-30, page 5-22, shows the principal elements of a gate valve. Area A shows the line connection and the outside structure of the valve; area B shows the wedge or gate inside the valve and the stem to which the gate and the handwheel are attached. When the valve is opened, the gate stands up inside the bonnet with its bottom flush with the wall of the line. When the valve is closed, the gate blocks the flow by standing straight across the line where it rests firmly against the two seats that extend completely around the line.

A gate valve allows a straight flow and offers little or no resistance to the fluid flow when the valve is completely open. Sometimes a gate valve is in the partially open position to restrict the flow rate.

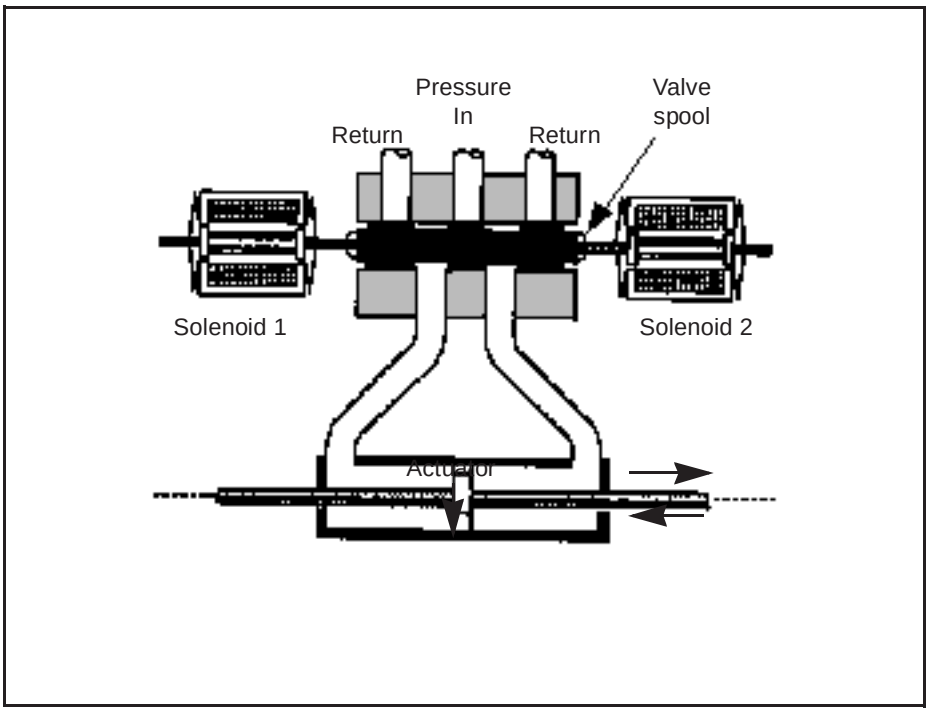

Figure 5-29. Solenoid-operated, sliding-spool, directional-control valve

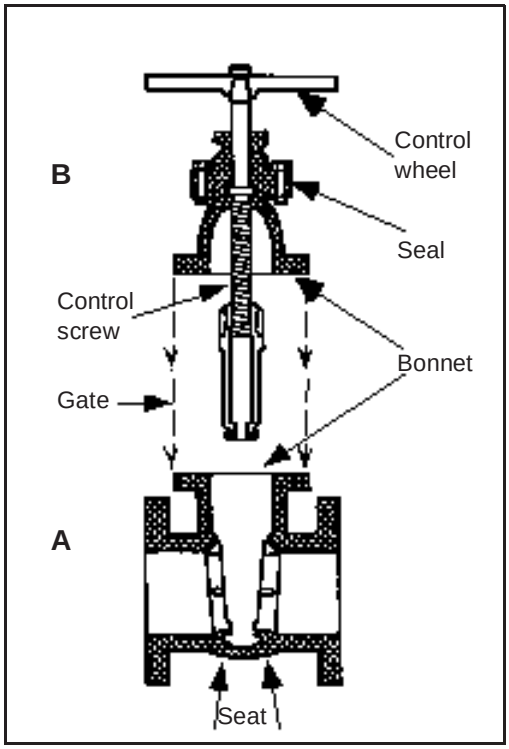

Figure 5-30. Cross section of a gate valve

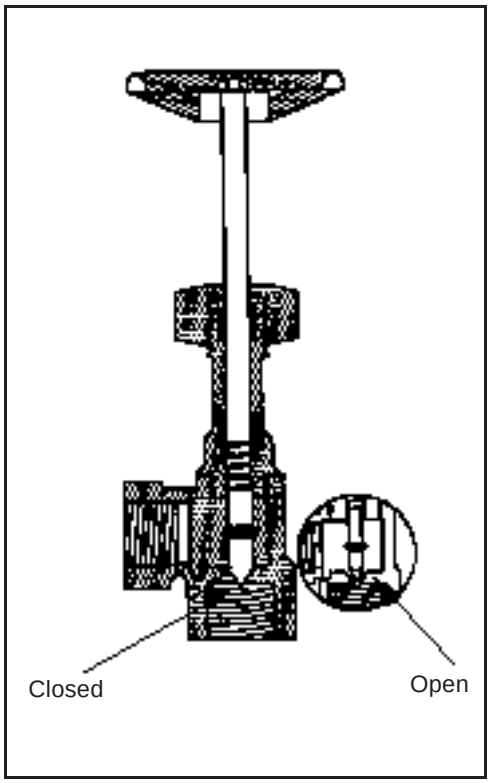

Figure 5-32. Sectional view of a needle valve

However, its main use is in the fully open or fully closed positions. If the valve is left partly open, the valve's face stands in the fluid flow, which will act on the face and cause it to erode.

b. *Globe Valve.* A disc, which is screwed directly on the end of the stem, is the controlling member of a globe valve. A valve is closed by lowering a disc into a valve seat. Since fluid flows equally on all sides of the center of support when a valve is open, there is no unbalanced pressure on a disc to cause uneven wear. Figure 5-31 shows a globe valve.

c. *Needle Valve.* A needle valve is similar in design and operation to a globe valve. Instead of a disc, a needle valve has a long, tapered point at the end of a valve stem. Figure 5-32 shows a sectional view of a needle valve. A long taper allows a needle valve to open or close gradually. A needle valve is used to control flow—

- Into delicate gauges, which could be damaged if high-pressure fluid was suddenly delivered.
- At the end of an operation when work motion should halt slowly.
- At other points where precise flow adjustments are necessary.
- At points where a small flow rate is desired.

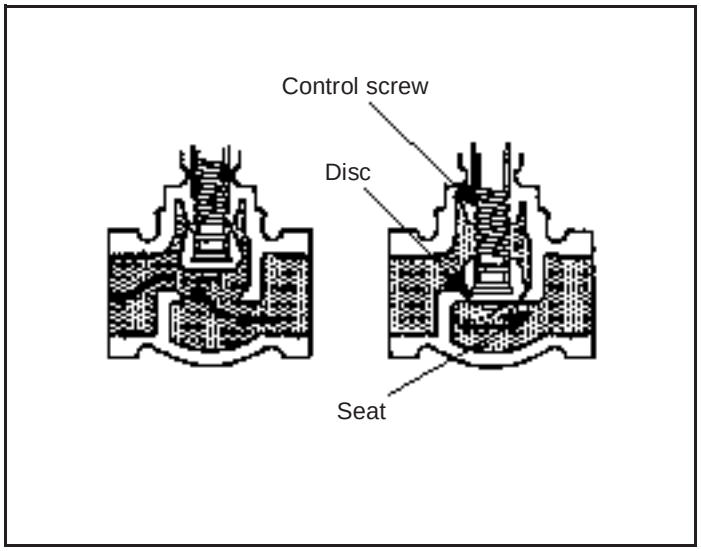

Figure 5-31. Operation of a globe valve

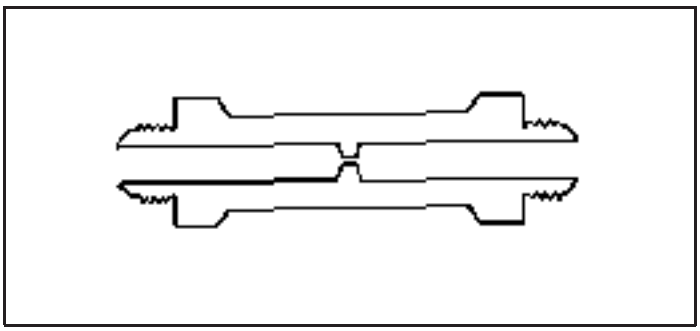

Figure 5-33. Fixed restrictor

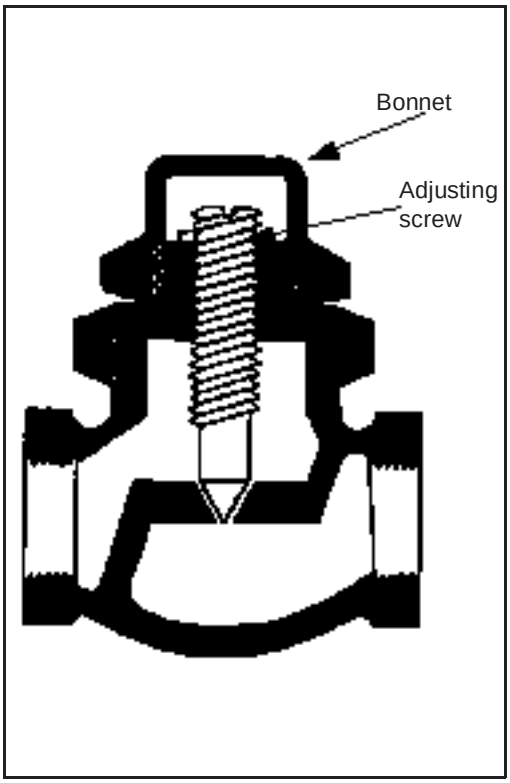

Figure 5-34. Variable restrictor

d. *Restrictor.* A restrictor is used in liquid-powered systems to limit the movement speed of certain actuating devices by limiting flow rate in a line. Figure 5-33 shows a fixed restrictor. Figure 5-34 shows a variable restrictor, which varies the restriction amount and is a modified needle valve. This valve can be preadjusted to alter the operating time of a particular subsystem. Also, it can be adjusted to meet the requirements of a particular system.

e. *Orifice Check Valve.* This valve is used in liquid-powered systems to allow normal speed of operation in one direction and limited speed in another. Figure 5-35 shows two orifice check valves.

f. *Flow Equalizer.* A flow equalizer (flow divider) is used in some hydraulic systems to synchronize the operation of two actuating units. An equalizer divides a single stream of fluid from a directional-control valve into two equal streams. Each actuating unit receives the same flow rate; both move in unison. When the two streams of return fluid operate in opposite directions, a flow equalizer combines them at an equal rate. Thus, a flow equalizer synchronizes the actuating units' movements during both operational directions.

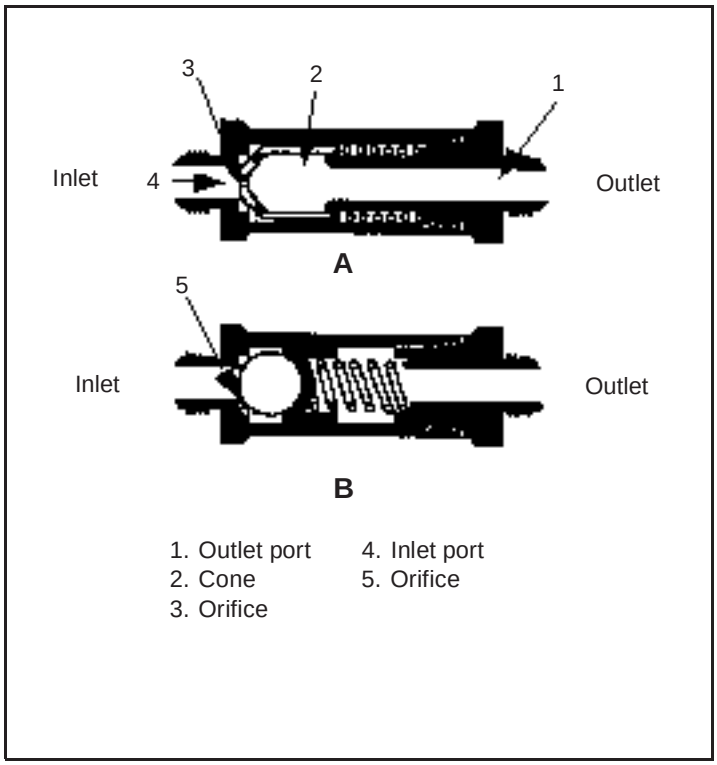

Figure 5-35. Orifice check valve

Figure 5-36, page 5-24, shows one type of flow equalizer; the valve is in the splitting (divided-flow) position. Fluid, under pressure from the directional-control valve, enters port 3. This pressure overcomes spring tension and

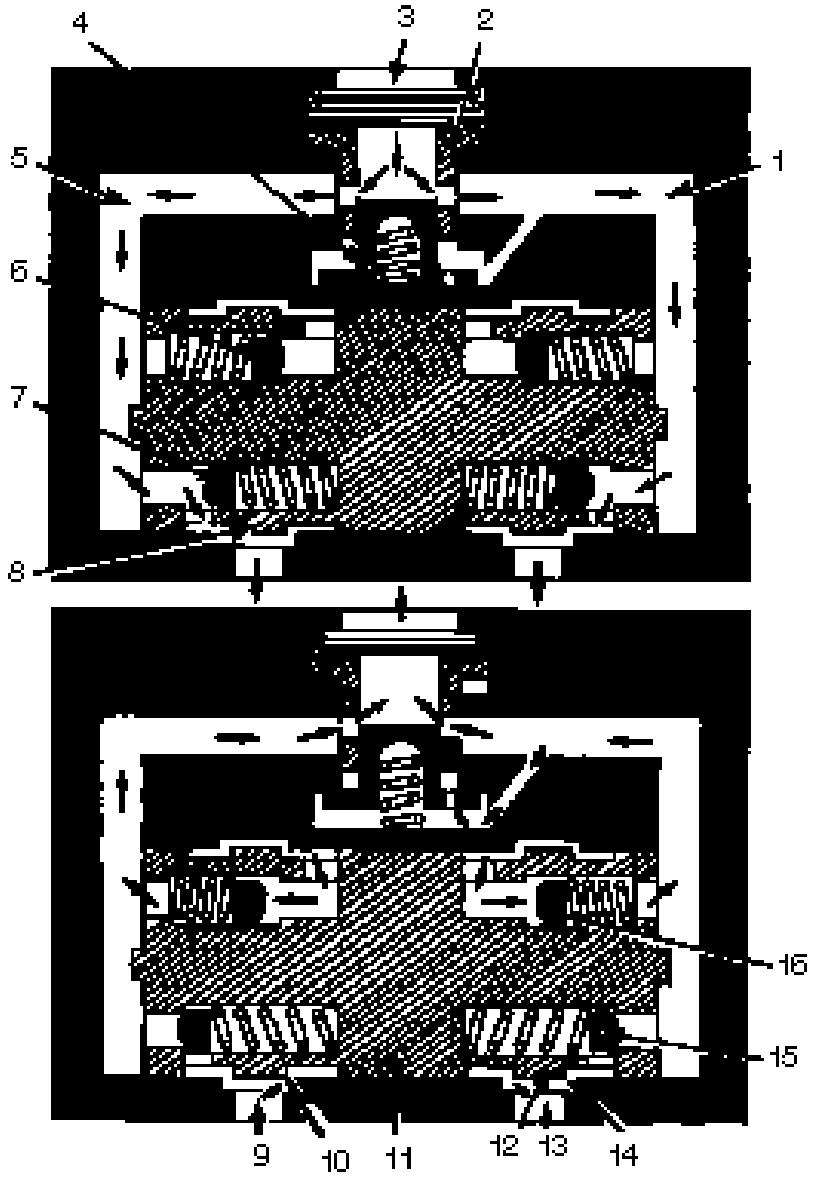

1. Side passage
2. Sleeve
3. Entrance port
4. Plug
5. Side passage
6. Combining check valve
7. Splitting check valve
8. Piston land
9. Exit port
10. Metering groove
11. Free-floating metering piston
12. Piston land
13. Exit port
14. Metering groove
15. Splitting check valve
16. Combining check valve

Figure 5-36. Flow equalizer

forces plug 4 down and uncovers the two orifices in sleeve 2. The fluid then splits and should flow equally through side passages 1 and 5. The fluid flows through—

- Splitting check valves 7 and 15.
- Metering grooves 10 and 14.
- Ports 9 and 13.
- The connecting lines to the actuating cylinders.

Any difference in the flow rate between the two passages results in a pressure differential between these two passages. Free-floating metering piston 11 shifts to equalize the internal pressure, equalizing the flow.

5-4. Valve Installation. Since a flow-control valve meters flow in one direction only, the inlet and outlet ports must be correctly connected in a circuit in relation to the flow direction to be metered. A valve's drain connection must be piped to a tank so that a connection will not be subjected to possible pressure surges. The location of a flow-control valve with respect to workload has an affect on a circuit's operating characteristics. The three basic types of flow-control-valve installations are the meter-in, meter-out, and bleed-off circuits.

a. *Meter-In Circuit* (Figure 5-37). With this circuit, a flow-control valve is installed in a pressure line that leads to a work cylinder. All flow entering a work cylinder is first metered through a flow-control valve. Since this metering action involves reducing flow from a pump to a work cylinder, a pump must deliver more fluid than is required to actuate a cylinder at the desired speed. Excess fluid returns to a tank through a relief valve. To conserve power and avoid undue stress on a pump, a relief valve's setting should be only slightly higher than a working pressure's, which a cylinder requires.

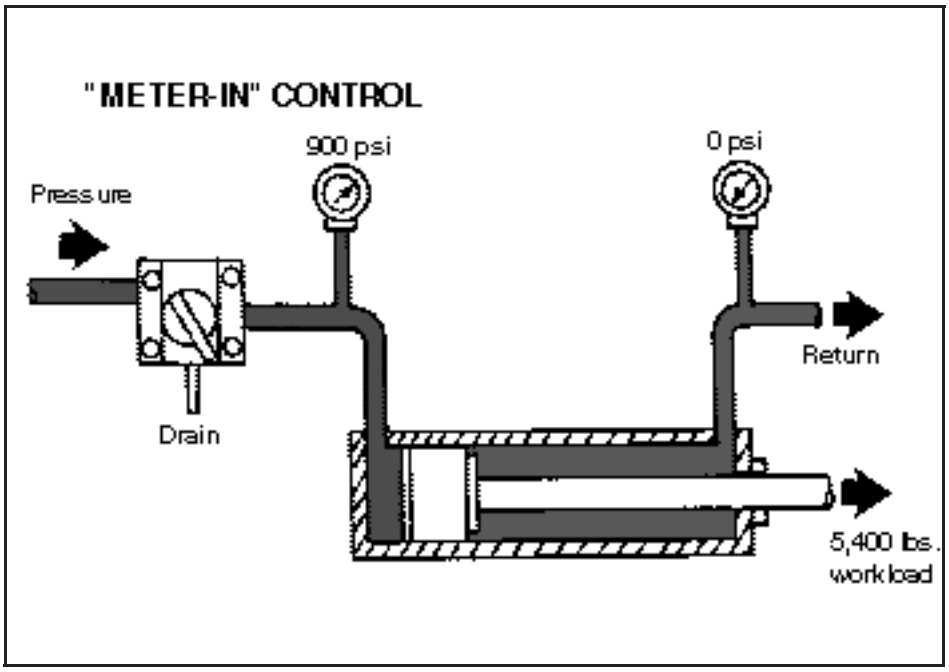

Figure 5-37. Typical meter-in circuit

A meter-in circuit is ideal in applications where a load always offers a positive resistance to flow during a controlled stroke. Examples would be feeding grinder tables, welding machines, milling machines, and rotary hydraulic motor drives. A flow-control-and-check valve used in this type of circuit would allow reverse free flow for the return stroke of a cylinder, but it would not provide control of return stroke speed.

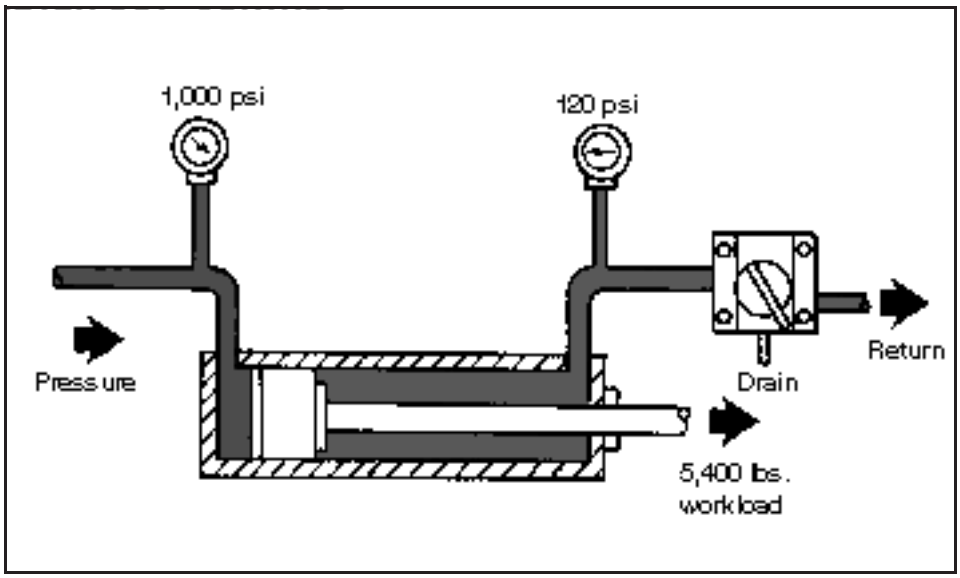

Figure 5-38. Typical meter-out circuit

b. *Meter-Out Circuit* (Figure 5-38, page 5-26). With a meter-out circuit, a flow-control valve is installed on the return side of a cylinder so that it controls a cylinder's actuation by metering its discharge flow. A relief valve is set slightly above the operating pressure that is required by the type of work.

This type of circuit is ideal for overhauling load applications in which a workload tends to pull an operating piston faster than a pump's delivery would warrant. Examples would be for drilling, reaming, boring, turning, threading, tapping, cutting off, and cold sawing machines. A flow-control-and-check valve used in this circuit would allow reverse free flow, but it would not provide a control of return stroke speed.

c. *Bleed-Off Circuit*. A typical bleed-off circuit is not installed directly in a feed line. It is *T*d into this line with its outlet connected to a return line. A valve regulates flow to a cylinder by diverting an adjustable portion of a pump's flow to a tank. Since fluid delivered to a work cylinder does not have to pass through a flow-control valve, excess fluid does not have to be dumped through a relief valve. This type of circuit usually involves less heat generation because pressure on a pump equals the work resistance during a feed operation.

d. *Compensated Flow*. The flow-control valves previously discussed do not compensate for changes in fluid temperature or pressure and are considered noncompensating valves. Flow rate through these valves can vary at a fixed setting if either the pressure or the fluid's temperature changes. Viscosity is the internal resistance of a fluid that can stop it from flowing. A liquid that flows easily has a high viscosity. Viscosity changes, which can result from temperature changes, can cause low variations through a valve. Such a valve can be used in liquid-powered systems where slight flow variations are not critical consideration factors.

However, some systems require extremely accurate control of an actuating device. In such a system, a compensated flow-control valve is used. This valve automatically changes the adjustment or pressure drop across a restriction to provide a constant flow at a given setting. A valve meters a constant flow regardless of variation in system pressure. A compensated flow-control valve is used mainly to meter fluid flowing into a circuit; however, it can be used to meter fluid as it leaves a circuit. For clarity, this manual will refer to this valve as a flow regulator.

5-5. Valve Failures and Remedies. Hydraulic valves are precision-made and must be very accurate in controlling a fluid's pressure, direction, and volume within a system. Generally, no packings are used on valves since leakage is slight, as long as the valves are carefully fitted and kept in good condition.

Contaminants, such as dirt in the oil, are the major problems in valve failures. Small amounts of dirt, lint, rust, or sludge can cause annoying malfunctions and extensively damage valve parts. Such material will cause a valve to stick, plug small openings, or abrade the mating surfaces until a valve leaks. Any of these conditions will result in poor machine operation, or even complete stoppage. This damage may be eliminated if operators use care in keeping out dirt.

Use only the specified oils in a hydraulic system. Follow the recommendations in a machine's operator's manual. Because oxidation produces rust particles, use an oil that will not oxidize. Change the oil and service the filters regularly.

a. *Servicing Valves.* Do the following before servicing a valve:

- Disconnect the electrical power source before removing a hydraulic valve's components. Doing so eliminates starting the equipment accidentally or shorting out the tools.
- Move a valve's control lever in all directions to release the system's hydraulic pressure before disconnecting any hydraulic valve components.
- Block up or lower all hydraulic working units to the ground before disconnecting any parts.
- Clean a valve and its surrounding area before removing any part for service. Use steam-cleaning equipment if available; however, do not allow water to enter a system. Be certain that all hose and line connections are tight.
- Use fuel oil or other suitable solvents to clean with if steam cleaning is not possible. However, never use paint thinner or acetone. Plug the port holes immediately after disconnecting the lines.

b. *Disassembling Valves.* Do the following when disassembling a valve:

- Do not perform service work on a hydraulic valve's interior on the shop floor, on the ground, or where there is danger of dust or dirt being blown into the parts. Use only a clean bench area. Be certain that all tools are clean and free of grease and dirt.
- Be careful to identify the parts when disassembling for later reassembly. Spools are selectively fitted to valve bodies and must be returned to those same bodies. You must reassemble the valve sections in the same order.

CAUTION

Be very careful when removing a backup plug on a spring-loaded valve. Personal injury could result.

- Be very careful when you have to clamp a valve housing in a vise. Do not damage the component. If possible, use a vise equipped with lead or brass jaws, or protect the component by wrapping it in a protective covering.
- Make sure that you seal all the valve's housing openings when you remove the components during service work. Doing so will prevent foreign material from entering the housing.
- Use a press to remove springs that are under high pressure.
- Wash all valve components in a clean mineral-oil solvent (or other noncorrosive cleaner). Dry the parts with compressed air, and place them on a clean surface for inspection. Do not wipe a valve with waste paper or rags. Lint deposits on any parts may enter the hydraulic system and cause trouble.
- Do not use carbon tetrachloride as a cleaning solvent; it can deteriorate the rubber seals.
- Coat the parts with a rust-inhibiting hydraulic oil immediately after cleaning and drying them. Make sure to keep the parts clean and free from moisture until you reinstall them.
- Inspect the valve springs carefully when disassembling them. Replace all the springs that show signs of being cocked or crooked or ones that contain broken, fractured, or rusty coils.
- Use a spring tester to check the strength of the springs, in pounds, compressed to a specified length (see Figure 5-39).

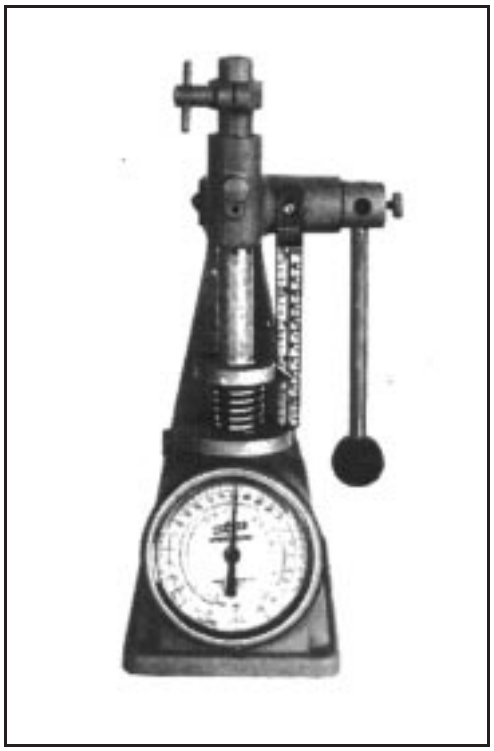

Figure 5-39. Spring tester

c. *Repairing Valves.* The following paragraphs address repair of directional-control, volume-control, and pressure-control valves:

(1) Directional-Control Valves. Directional-control-valve spools are installed in the valve housing by a select hone fit. This is done to provide the closest possible fit between a housing and a spool for minimum internal leakage and maximum holding qualities. To make this close fit, you would need special factory techniques and equipment. Therefore, most valve spools and bodies are furnished for service only in matched sets and are not available individually for replacement.

When repairing these valves, inspect the valve spools and bores for burrs and scoring as shown in Figure 5-40. The spools may become coated with impurities from the hydraulic oil. When scoring or coating is not deep enough to cause a leakage problem, polish the surfaces with crocus cloth. Do not remove any of the valve material. Replace a valve's body and spool if scoring or coating is excessive. If a valve's action was erratic or sticky before you removed it, it may be unbalanced because of wear on the spools or body; replace the valve.

(2) Volume-Control Valve. On valve spools with orifices, inspect for clogging from dirt or other foreign matter (see Figure 5-41). Clean a valve with compressed air or a small wire. Rewash all the parts thoroughly to remove all emery or metal particles. Any such abrasives could quickly damage an entire hydraulic system. Check a valve spool for freedom of movement in a bore. When lightly oiled, a valve should slide into a bore from its own weight.

(3) Pressure-Control Valve (Figure 5-42). Check for a weak relief-valve spring with a spring tester if system checks have indicated low pressure. You can remedy this by replacing a spring or by adding shims to increase the compression of a spring, in some cases. Never add so many shims that a spring is compressed solid.

(4) Valve Seats and Poppets. Check the valve seats for possible leakage by scoring. Replace a valve if flat spots appear on a seat or on the poppets. You can surface polish the metal valve seats and poppets if the scoring is not deep. Do not remove any valve material.

Some seats and valve poppets are made of nylon, which is long wearing and elastic enough to conform perfectly to mating surfaces, giving a tight seal. The nylon seats on the poppet valves will take wear, with no damage to the mating metal point. When repairing these valves, always replace the nylon parts with new nylon service parts.

(5) Nonadjustable, Cartridge-Type Relief Valves. If a relief valve's screen or orifice becomes plugged, oil cannot enter its body to equalize the pressure in an area between an orifice plate and a pilot assembly (see Figure 5-43, page 5-30). This plugging causes a valve to open at lower pressures than it should. The result is sluggish operating hydraulic units. Keep a relief valve's screen and orifice clean at all times. Also check the *O*-rings for damage, which might cause leakage.

Each relief valve's cartridge is stamped with a part number, a pressure limit, and the date of manufacture (see Figure 5-44, page 5-30). Use

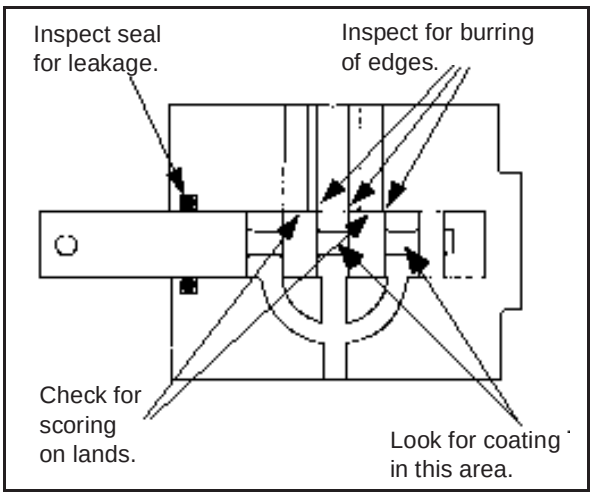

Figure 5-40. Valve inspection

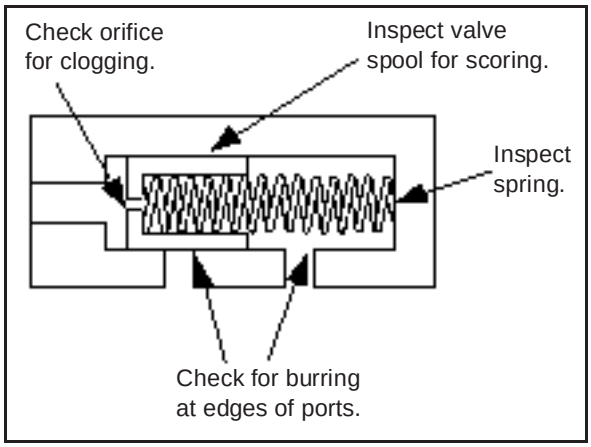

Figure 5-41. Volume-control valve

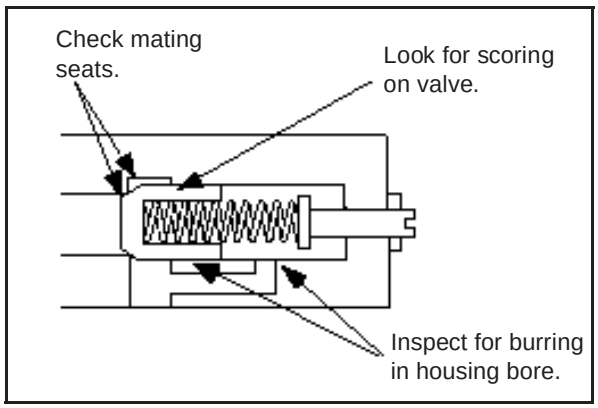

Figure 5-42. Pressure-control valve

this code when testing the cartridges. Test a valve's cartridges for pressure setting by installing them in a system and operating it until you reach the valve's opening pressure. Read the pressure on a gauge that is installed in a valve's circuit.

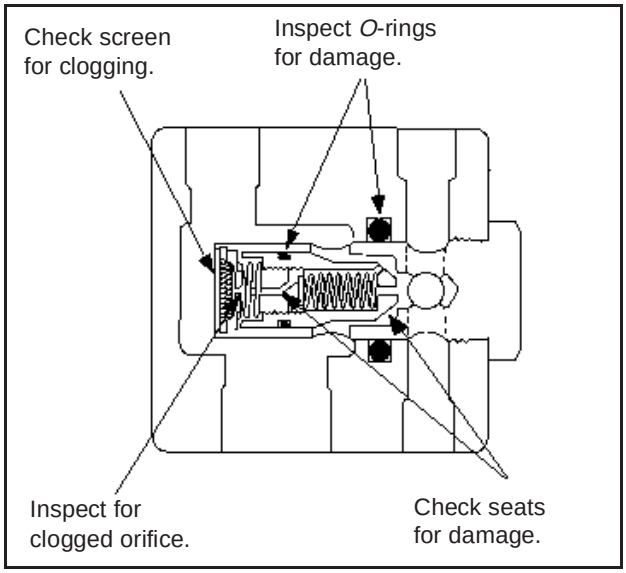

Figure 5-43. Cartridge-type relief valve

5-6. Valve Assembly. Do the following when assembling valves:

- Ensure that the valves are clean. Wash their parts in kerosene, blow dry them with air, and then dip them in hydraulic oil with rust inhibitor to prevent rusting. Doing so will aid in assembly and provide initial lubrication. You can use petroleum jelly to hold the sealing rings in place during assembly.
- Double check to make sure that a valve's mating surfaces are free of burrs and paint.
- Replace all the seals and gaskets when repairing a valve assembly. Soak the new seals and gaskets in clean hydraulic oil before assembling. Doing so will prevent damage and help seal a valve's parts.
- Make sure that you insert a valve's spools in their matched bores. You must assemble a valve's sections in their correct order.
- Make sure that there is no distortion when mounting valves. Distortion can be caused by uneven tension on the mounting bolts and oil-line flanges, uneven mounting surfaces, improper valve location, or insufficient allowance for line expansion when the oil temperature rises. Any of these could result in valve-spool binding.
- Check the action of a valve's spools after you tighten the bolts. If there is any sticking or binding, adjust the tension of the mounting bolts.

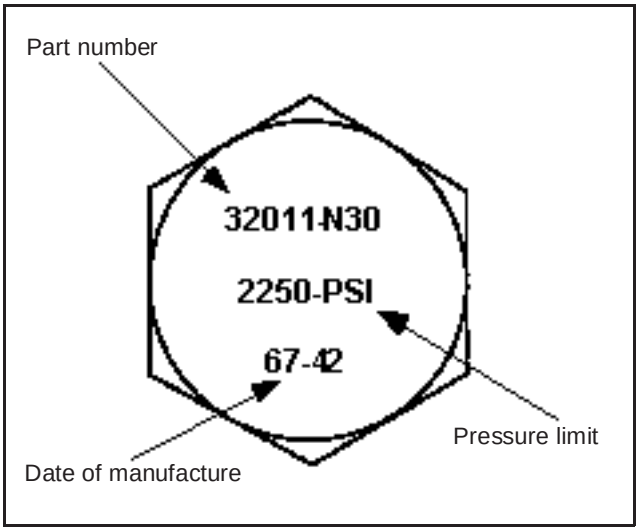

Figure 5-44. Readings on a cartridge-type relief valve

5-7. Troubleshooting Valves. Listed below are areas that you can diagnose in hydraulic valves. When working on a specific machine, refer to a machine's technical manual for more information.

a. *Pressure-Control Valves.* The following lists information when troubleshooting relief, pressure-reducing, pressure-sequence, and unloading valves:

(1) Relief Valves. Consider the following when troubleshooting relief valves because they have low or erratic pressure:

- Adjustment is incorrect.
- Dirt, chip, or burrs are holding the valve partially open.
- Poppets or seats are worn or damaged.
- Valve piston in the main body is sticking.
- Spring is weak.
- Spring ends are damaged.
- Valve in the body or on the seat is cocking.
- Orifice or balance hold is blocked.

Consider the following when troubleshooting relief valves because they have no pressure:

- Orifice or balance hole is plugged.
- Poppet does not seat.
- Valve has a loose fit.
- Valve in the body or the cover binds.
- Spring is broken.
- Dirt, chip, or burrs are holding the valve partially open.
- Poppet or seat is worn or damaged.
- Valve in the body or on the seat is cocking.

Consider the following when troubleshooting relief valves because they have excessive noise or chatter:

- Oil viscosity is too high.
- Poppet or seat is faulty or worn.
- Line pressure has excessive return.
- Pressure setting is too close to that of another valve in the circuit.
- An improper spring is used behind the valve.

Consider the following when troubleshooting relief valves because you cannot adjust them properly without getting excessive system pressure:

- Spring is broken.
- Spring is fatigued.
- Valve has an improper spring.
- Drain line is restricted.

Consider the following when troubleshooting relief valves because they might be overheating the system:

- Operation is continuous at the relief setting.
- Oil viscosity is too high.
- Valve seat is leaking.

(2) Pressure-Reducing Valves. Consider the following when troubleshooting pressure-reducing valves because they have erratic pressure:

- Dirt is in the oil.
- Poppet or seat is worn.
- Orifice or balance hole is restricted.
- Valve spool binds in the body.
- Drain line is not open freely to a reservoir.
- Spring ends are not square.
- Valve has an improper spring.
- Spring is fatigued.
- Valve needs an adjustment.
- Spool bore is worn.

(3) Pressure-Sequence Valves. Consider the following when troubleshooting pressure-sequence valves because the valve is not functioning properly:

- Installation was improper.
- Adjustment was improper.
- Spring is broken.
- Foreign matter is on a plunger seat or in the orifices.
- Gasket is leaky or blown.
- Drain line is plugged.
- Valve covers are not tightened properly or are installed wrong.
- Valve plunger is worn or scored.
- Valve-stem seat is worn or scored.
- Orifices are too large, which causes a jerky operation.
- Binding occurs because moving parts are coated with oil impurities (due to over-heating or using improper oil).

Consider the following when troubleshooting pressure-sequence valves because there is a premature movement to the secondary operation:

- Valve setting is too low.
- An excessive load is on a primary cylinder.
- A high inertia load is on a primary cylinder.

Consider the following when troubleshooting pressure-sequence valves because there is no movement or the secondary operation is slow:

- Valve setting is too high.
- Relief-valve setting is too close to that of a sequence valve.
- Valve spool binds in the body.

(4) Unloading Valves. Consider the following when troubleshooting these valves because a valve fails to completely unload a pump:

- Valve setting is too high.
- Pump does not build up to the unloading valve pressure.
- Valve spool binds in the body.

b. *Directional-Control Valves.* Directional-control valves include spool, rotary, and check valves. Consider the following when troubleshooting these valves because there is faulty or incomplete shifting:

- Control linkage is worn or is binding.
- Pilot pressure is insufficient.
- Solenoid is burned out or faulty.
- Centering spring is defective.
- Spool adjustment is improper.

Consider the following when troubleshooting directional-control valves because the actuating cylinder creeps or drifts:

- Valve spool is not centering properly.
- Valve spool is not shifted completely.
- Valve-spool body is worn.
- Leakage occurs past the piston in a cylinder.
- Valve seats are leaking.

Consider the following when troubleshooting directional-control valves because a cylinder load drops with the spool in the centered position:

- Lines from the valve housing are loose.
- *O*-rings on lockout springs or plugs are leaking.
- Lockout spring is broken.
- Relief valves are leaking.

Consider the following when troubleshooting directional-control valves because a cylinder load drops slightly when it is raised:

- Check-valve spring or seat is defective.
- Spool valve's position is adjusted improperly.

Consider the following when troubleshooting directional-control valves because the oil heats (closed-center systems):

- Valve seat leaks (pressure or return circuit).
- Valves are not adjusted properly.

c. *Volume-Control Valves.* Volume-control valves include flow-control and flow-divider valves. Consider the following when troubleshooting these valves because there are variations in flow:

- Valve spool binds in the body.
- Cylinder or motor leaks.
- Oil viscosity is too high.
- Pressure drop is insufficient across a valve.
- Oil is dirty.

Consider the following when troubleshooting volume-control valves because of erratic pressure:

- Valve's poppet or seat is worn.
- Oil is dirty.

Consider the following when troubleshooting volume-control valves because of improper flow:

- Valve was not adjusted properly.
- Valve-piston travel is restricted.
- Passages or orifice is restricted.
- Valve piston is cocked.
- Relief valves leak.
- Oil is too hot.

Consider the following when troubleshooting volume-control valves because the oil heats:

- Pump speed is improper.
- Hydraulic functions are holding in relief.
- Connections are incorrect.

CHAPTER 6

Circuit Diagrams and Troubleshooting

Hydraulic-circuit diagrams are complete drawings of a hydraulic circuit. Included in the diagrams is a description, a sequence of operations, notes, and a components list. Accurate diagrams are essential to the designer, the people who build the machine, and the person who repairs it. Hydraulic mechanisms are precision units, and their continued smooth operation depends on frequent inspection and servicing. Personnel must maintain the equipment and system by performing frequent inspections and servicing. The systems must be kept clean, with the oil and filters changed at established intervals.

6-1. Hydraulic-Circuit Diagrams. The four types of hydraulic-circuit diagrams are block, cutaway, pictorial, and graphical. These diagrams show the—

- Components and how they will interact.
- Manufacturing engineer and assembler how to connect the components.
- Field technician how the system works, what each component should be doing, and where the oil should be going so that the technician can diagnose and repair the system.

a. *Block Diagram*. A block diagram shows the components with lines between the clocks, which indicate connections and/or interactions.

b. *Cutaway Diagram*. A cutaway diagram shows the internal construction of the components as well as the flow paths. Because the diagram uses colors, shades, or various patterns in the lines and passages, it can show the many different flow and pressure conditions.

c. *Pictorial Diagram*. A pictorial diagram shows a circuit's piping arrangement. The components are seen externally and are usually in a close reproduction of their actual shapes and sizes.

d. *Graphical Diagram*. A graphical diagram (Figure 6-1), the short-hand system of the industry, is usually preferred for design and troubleshooting. Simple geometric symbols represent the components and their controls and connections.

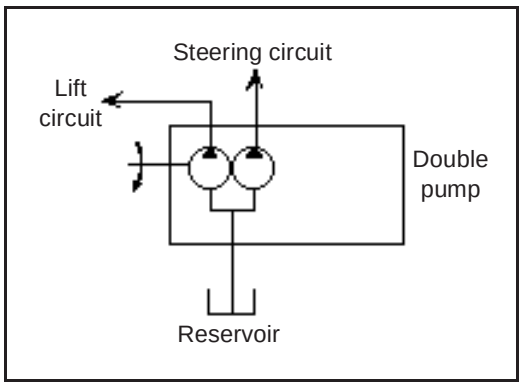

Figure 6-1. Graphical-circuit diagram

6-2. United States of American Standards Institute (USASI) Graphical Symbols. The USASI, the old American Standards Association (ASA), and the Joint Industry Conference (JIC) are three systems of symbols used in circuit diagrams. This manual uses the USASI symbols shown in Figure 6-2, pages 6-2 and 6-3.

Lines and Line Functions	
Line, working	
Line, pilot	
Line, drain	
Connector	
Line, flexible	
Lines, joining	
Lines, passing	
Direction of flow	
Line to reservoir Above fluid level Below fluid level	
Line to vented manifold	
Plug or plugged connection	
Restriction, fixed	
Restriction, variable	
Pumps	
Single, fixed-displacement	
Single, variable-displacement	
Actuators	
Motor, fixed-displacement, reversible	
Motor, fixed-displacement, nonreversible	
Motor, variable-displacement, reversible	

Cylinder - single-acting	
Cylinder - double-acting Differential Nondifferential	
Valves	
Check	
On-off (manual shutoff)	
Pressure-relief	
Pressure-reducing	
Flow-control, adjustable noncompensated	
Flow-control, adjustable (temperature and pressure compensated)	
Two-position two-connection	
Two-position three-connection	
Two-position four-connection Three-position four-connection Two-position in transition	
Valves capable of infinite positioning (horizontal bars indicate infinite positioning ability)	

Figure 6-2. USASI graphical symbols

Methods of Operation		Miscellaneous	
Spring		Rotating shaft	
Manual		Enclosure	
Push button		Reservoir Vented Pressurized	
Push-pull lever			
Pedal or treadle		Pressure gauge	
Mechanical		Electric motor	
Detent		Accumulator, spring -oaded	
Pressure compensated		Accumulator, gas-charged	
Solenoid, single-winding		Heater	
Reversing motor		Cooler	
Pilot pressure Remote supply Internal supply		Temperature controller	
		Filter, strainer	

Figure 6-2. USASI graphical symbols (continued)

a. *Reservoir*. The symbol for a reservoir is a rectangle; the horizontal side is the longest side (see Figure 6-3). If a reservoir is vented to the atmosphere, the top of the symbol is open. If a reservoir is pressurized, the top is closed. Lines that connect to a reservoir usually are drawn from the top, regardless of where they connect. If the line terminates below the fluid level, it is drawn to the bottom of the symbol. A line connected to the bottom of a reservoir may be drawn from the bottom of the symbol, if the bottom connection is essential to the system's operation. For example, when the pump's inlet must be charged or flooded by a positive head of oil above the inlet's port, they would be positioned above the pump symbol and the suction line drawn out the bottom of the symbol. Every reservoir has at least two hydraulic lines connected to it; some have more. The reservoir is usually the only component pictured more than once so that components and return or drain lines to and from the reservoir are represented correctly.

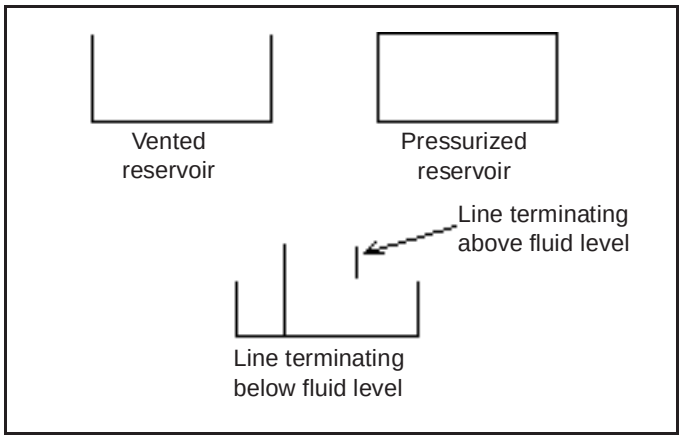

Figure 6-3. Reservoir symbols

b. *Lines*. Figure 6-4 shows the symbols for hydraulic lines, which are as follows:

- Working line: A solid line that represents a hydraulic pipe, tube, hose, or other conductor that carries the liquid between components.
- Pilot line: Long dashes that represent control lines.
- Drain line: Short dashes that represent the drain lines for leaking oil.
- Flexible line: A solid, arced line that is drawn between two dots which represents a flexible line in the system.

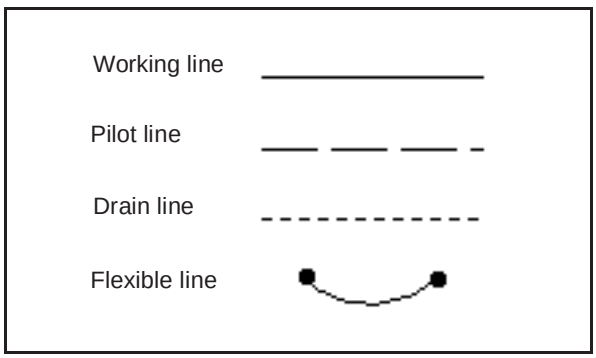

Figure 6-4. Hydraulic line symbols

Figure 6-5, diagram A, shows crossed lines that are not connected. Systems 1 and 2 represent two ways to indicate an intersection, one with a loop, one without a loop. Diagram B shows lines that are connected. The lines in system 1 use a dot at the crossing, indicating that loops are used to designate the crossing. The lines in system 2 do not use a dot at the crossing, indicating that loops are not used at the crossing.

c. *Pump*. The basic symbol of a pump is a circle with a black triangle in the circle pointing outward (see Figure 6-6). The pressure line from the pump is drawn from the tip of the triangle; the suction line is drawn opposite it. The triangle indicates the flow direction. If a pump is reversible, it will have two triangles, one pointing out of each port. Port connections to the pump (or any other component except the reservoir) are at the points where the lines touch the symbols. A variable (or adjustable) component is designated by an arrow drawn through the components at a 45-degree angle.

d. *Motor*. Motor symbols are circles with black triangles pointing inward, indicating that the motor receives pressure energy (see Figure 6-7, page 6-6). One triangle indicates a nonreversible motor; two triangles indicate a reversible motor. Flow direction in a single triangle is the way the triangle points. In the reversible motor, studying the pump and valve symbols is the way to trace the flow direction. The arrows that are outside the lines show the flow direction, which is always away from the pump's pressure port and into the motor port that is connected to the pressure line. The opposite port then discharges back to the tank.

e. *Cylinder*. The basic cylinder symbol is a simple rectangle (a barrel) and a *T*-shaped figure (a piston and a rod). The symbol can be drawn in any position. The following describes four different cylinder symbols (see Figure 6-8, page 6-6):

- Single-acting cylinder: One hydraulic line drawn to the basic cylinder symbol; the end opposite the port is open.
- Double-acting cylinder: Both ends of the symbol are closed; two lines meet the basic cylinder symbol at the port connections.
- Double-end rod cylinder: A rod line extends from each end of the basic cylinder symbol.
- Cushioned cylinder: Small rectangles are placed against the piston line. If the cushion has an adjustable orifice, a slanted arrow is drawn across the symbol. There is no symbol for flow direction, so lines must be watched to see where they are connected, which should help determine flow.

f. *Pressure-Control Valves*. The basic symbol is a square with external port connections and an arrow inside to show the flow direction (see Figure 6-9, page 6-6). This valve operates by balancing the pump outlet to the reservoir.

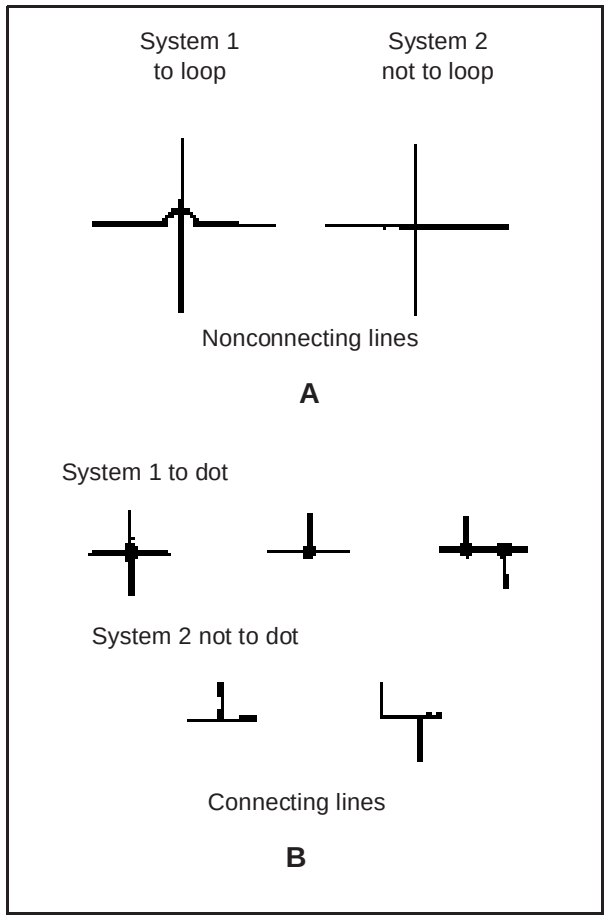

Figure 6-5. Crossing lines A and B

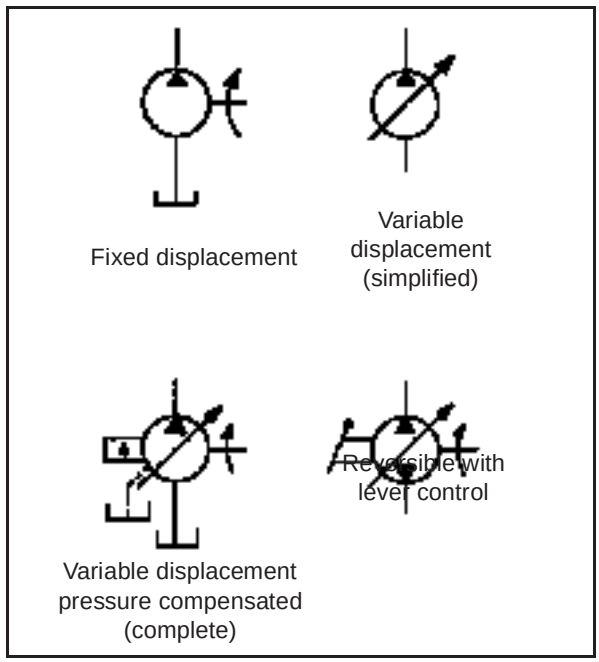

Figure 6-6. Pump symbols

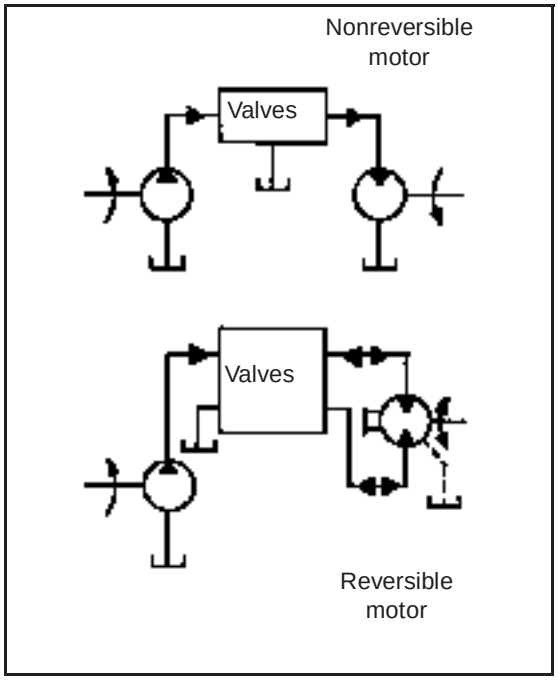

Figure 6-7. Motor symbols

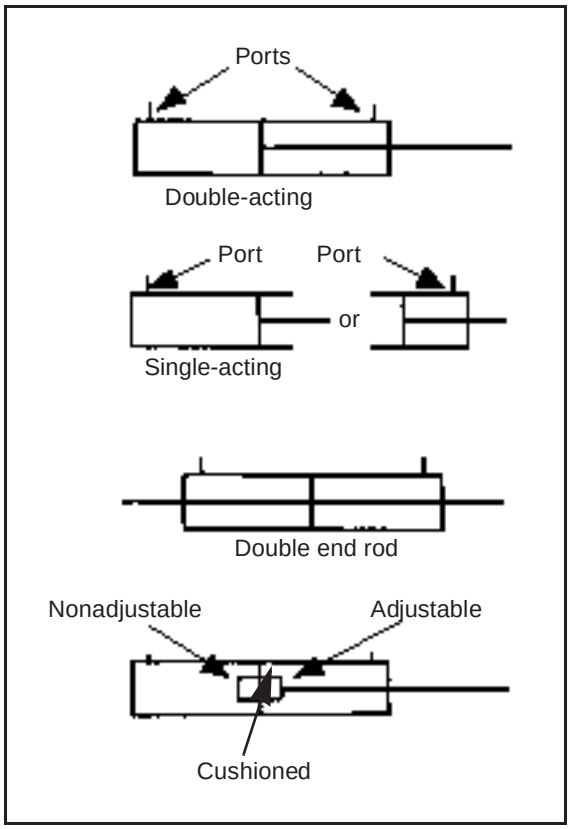

Figure 6-8. Cylinder symbols

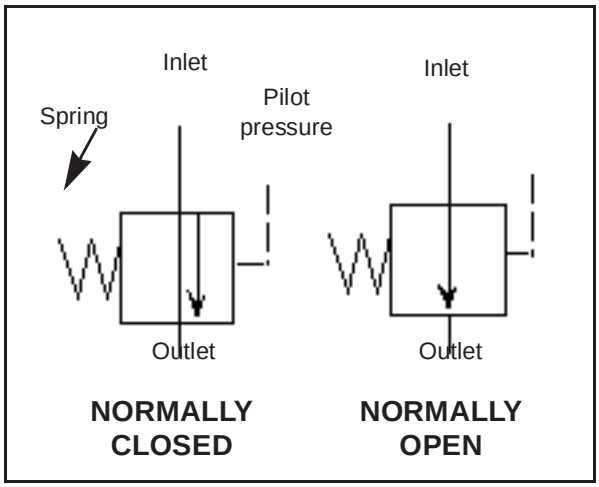

Figure 6-9. Pressure-control-valve symbols

(1) Relief Valve (Figure 6-10). The relief valve's symbol goes between the pressure line and the tank. The flow-direction arrow points away from the pressure-line port and toward the tank port. When pressure in the system overcomes the valve spring, flow is from the pressure port to the tank port.

(2) Sequence Valve (Figure 6-11). A sequence valve uses the relief valve. However, the inlet port is connected to a primary cylinder line; the outlet port is connected to the secondary cylinder line. Pilot pressure from the primary cylinder line sequences the flow to the outlet port when it reaches the valve's setting. Since the sequence valve is externally drained, a drain connection is added to the symbol at the drain's location in the valve.

(3) Check Valve (Figure 6-12, page 6-8). A check valve uses a sequence valve for free return flow when the cylinders are reversed. In Figure 6-12, diagram A shows the valves as separate units. Diagram B shows the check valve built into the sequence valve. The box around the valves is an enclosure, which shows the limits of a component or an assembly that contains more than one component. The enclosure is an alternate long and short dashed line. External ports are assumed to be on the enclosure line and indicate connections to the components.

(4) Counterbalance Valve (Figure 6-13, page 6-8). A counterbalance valve is a normally closed pressure-control with an integral check valve. A directly controlled valve uses the same symbol as in Figure 6-13, with the primary port connected to the bottom port of the cylinder and the secondary port to the directional valve. The valve is drained internally, so the symbol shows no drain connection. If the valve body has two primary ports, the symbol should show one of them plugged.

(5) Pressure-Reducing Valve. Figure 6-14, page 6-9 shows the normally opened pressure-reducing valve. The symbol shows the outlet pressure opposite the spring to modulate or shut off the flow when the valve setting is reached.

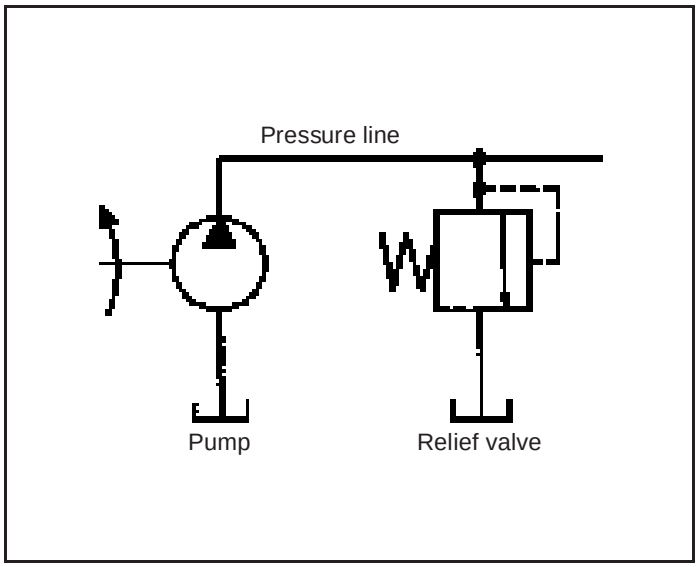

Figure 6-10. Relief-valve symbol

g. *Flow-Control Valves.* Figure 6-15, page 6-9, shows the symbols for the basic flow-control, adjustable and nonadjustable valves. The figure also shows the symbol for a completely adjustable, pressure-compensated, flow-control valve with a built-in bypass.

h. *Directional-Control Valves.* A directional-control-valve symbol uses a multiple envelope system that has a separate rectangle for each position. All the port connections are made to the envelope, which shows the neutral condition of the valve. Arrows in each envelope show the flow paths when the valve shifts to that position.

(1) Unloading Valve (Figure 6-16, page 6-9). The symbol for this valve has two envelopes. In the normally closed position, flow is shown blocked inside the valve. The spring control is placed adjacent to this envelope, indicating that the spring controls this position. The external pilot pressure is placed against the bottom envelope, indicating the flow condition when the pilot pressure

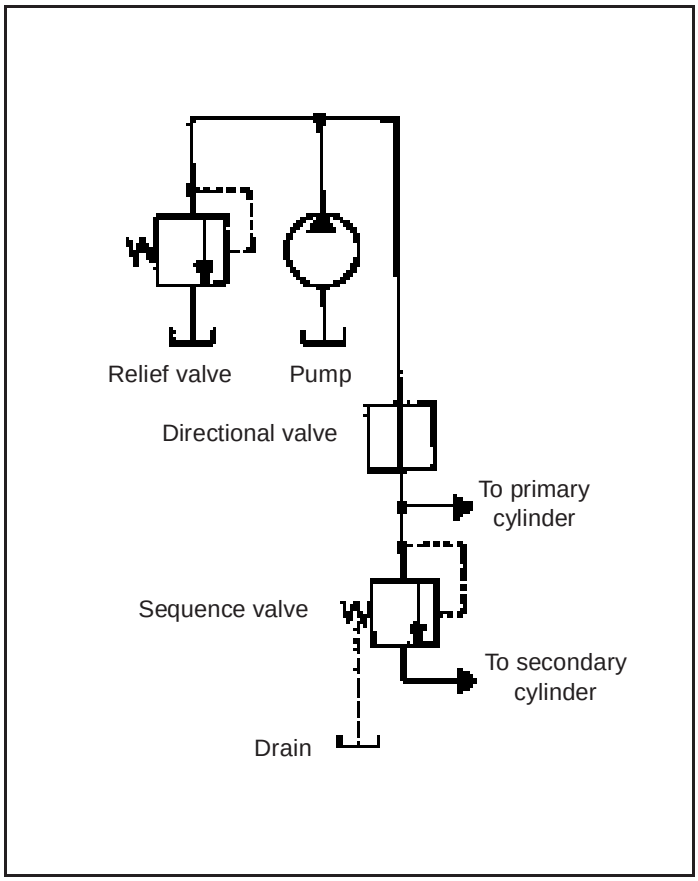

Figure 6-11. Sequence-valve symbol

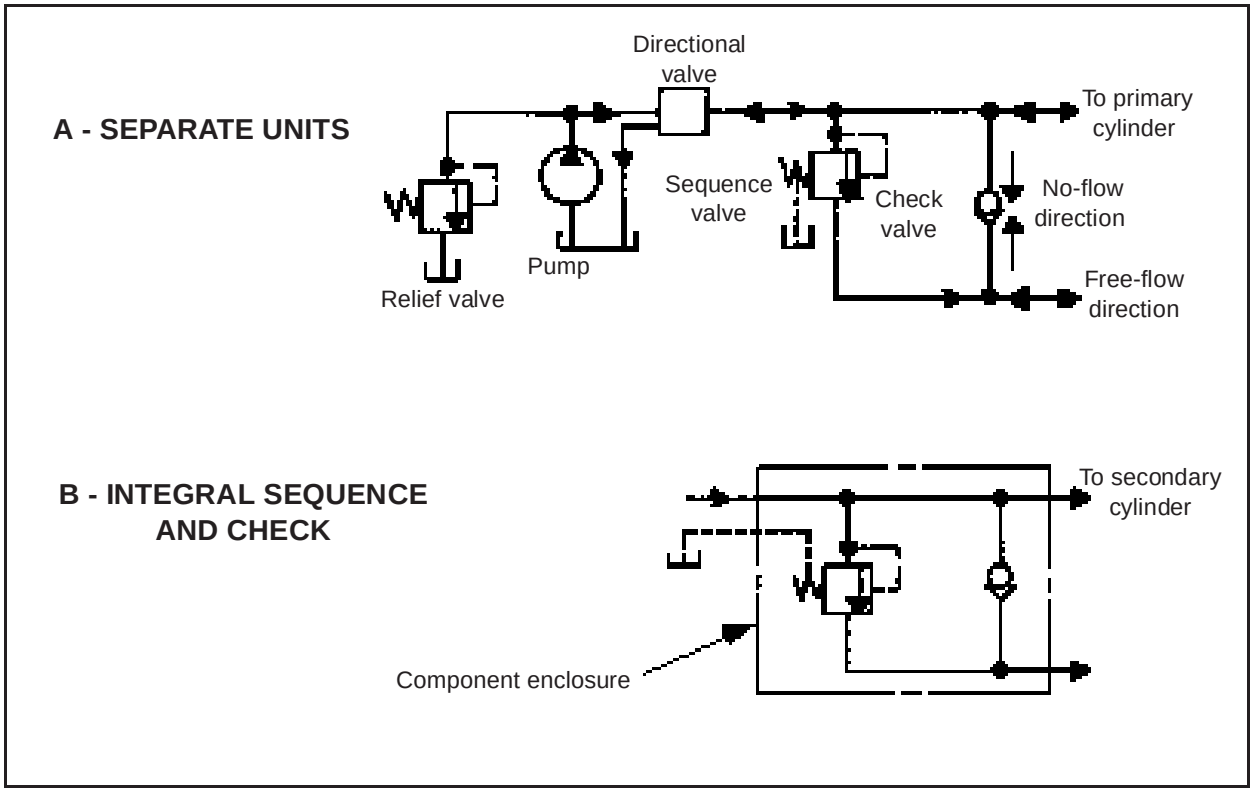

Figure 6-12. Check-valve symbol

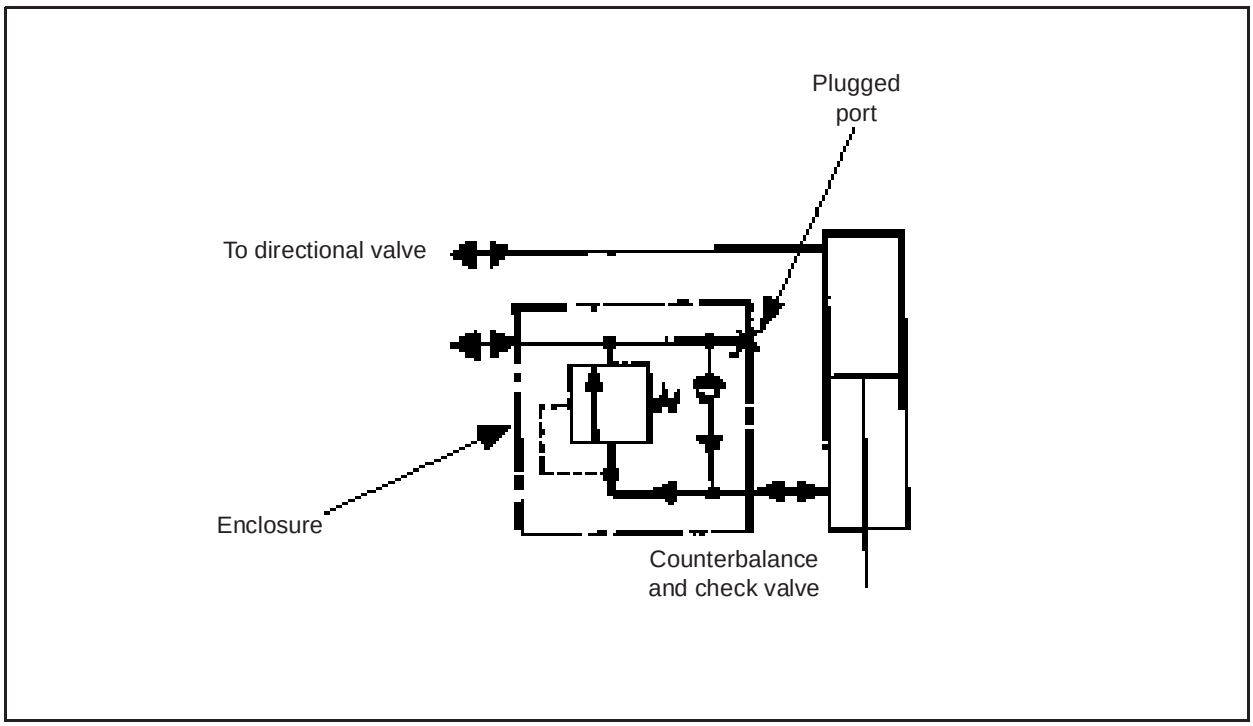

Figure 6-13. Counterbalance-valve symbol

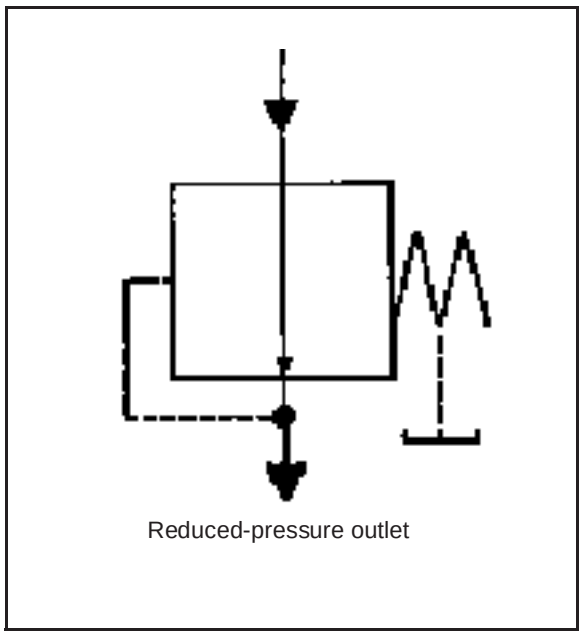

Figure 6-14. Pressure-reducing-valve symbol

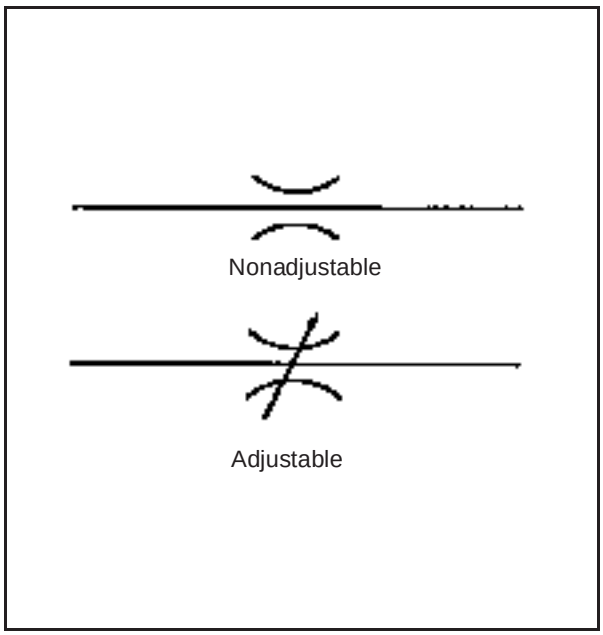

Figure 6-15. Flow-control-valve symbol

takes over. If the lower envelope were superimposed on the top envelope, the symbol would show that the flow path's arrow connects the pump outlet to the reservoir.

(2) Ordinary Four-Way Valve (Figure 6-17, page 6-10). If this valve is a two-position valve, the symbol will have two envelopes. If the valve has a center position, the symbol will have three envelopes. The actuating-control symbols are placed at the ends of the envelopes. The extreme envelopes show the flow conditions when their adjacent controls are actuated.

(3) Mobile Directional-Valve Section (Figure 6-18, page 6-10). The symbol for this valve section resembles a four-way-valve symbol; however, it has added connections and flow paths to represent the bypass passage. There is a separate envelope for each finite position, and connections are shown to the center or neutral position. The symbol shows a manual lever control with centering springs at each end.

i. *Accessories.* The symbol for a fluid conditioner is a square (Figure 6-19, page 6-11) that is turned 45 degrees and has the port connections to the corners. A dotted line at right angles to the port connections indicates that the conditioner is a filter or strainer. A cooler symbol has a solid line at a right angle to the fluid line with energy triangles (indicating heat) pointing out. An accumulator (Figure 6-20, page 6-11) symbol is an oval, with added inside details to indicate spring load, gas charge, or other features.

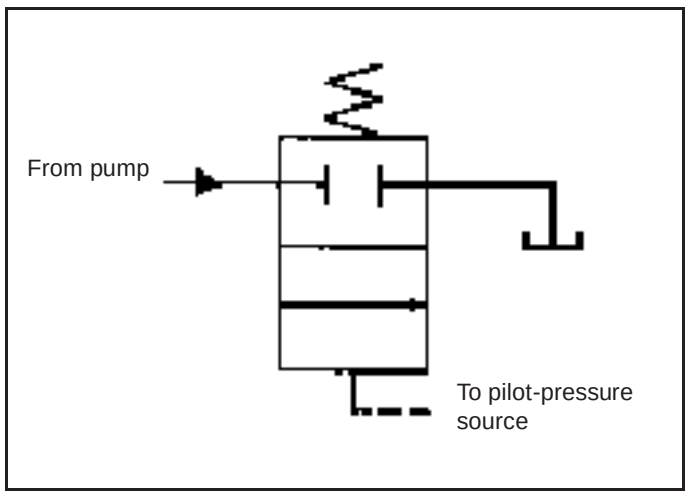

Figure 6-16. Unloading-valve symbol

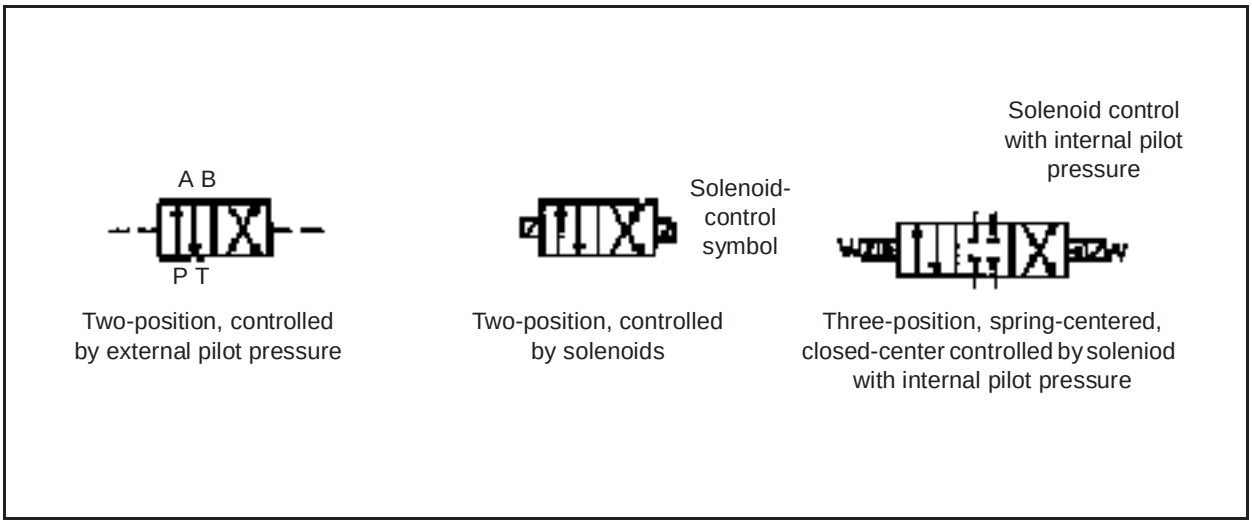

Figure 6-17. Four-way, directional-control-valve symbol

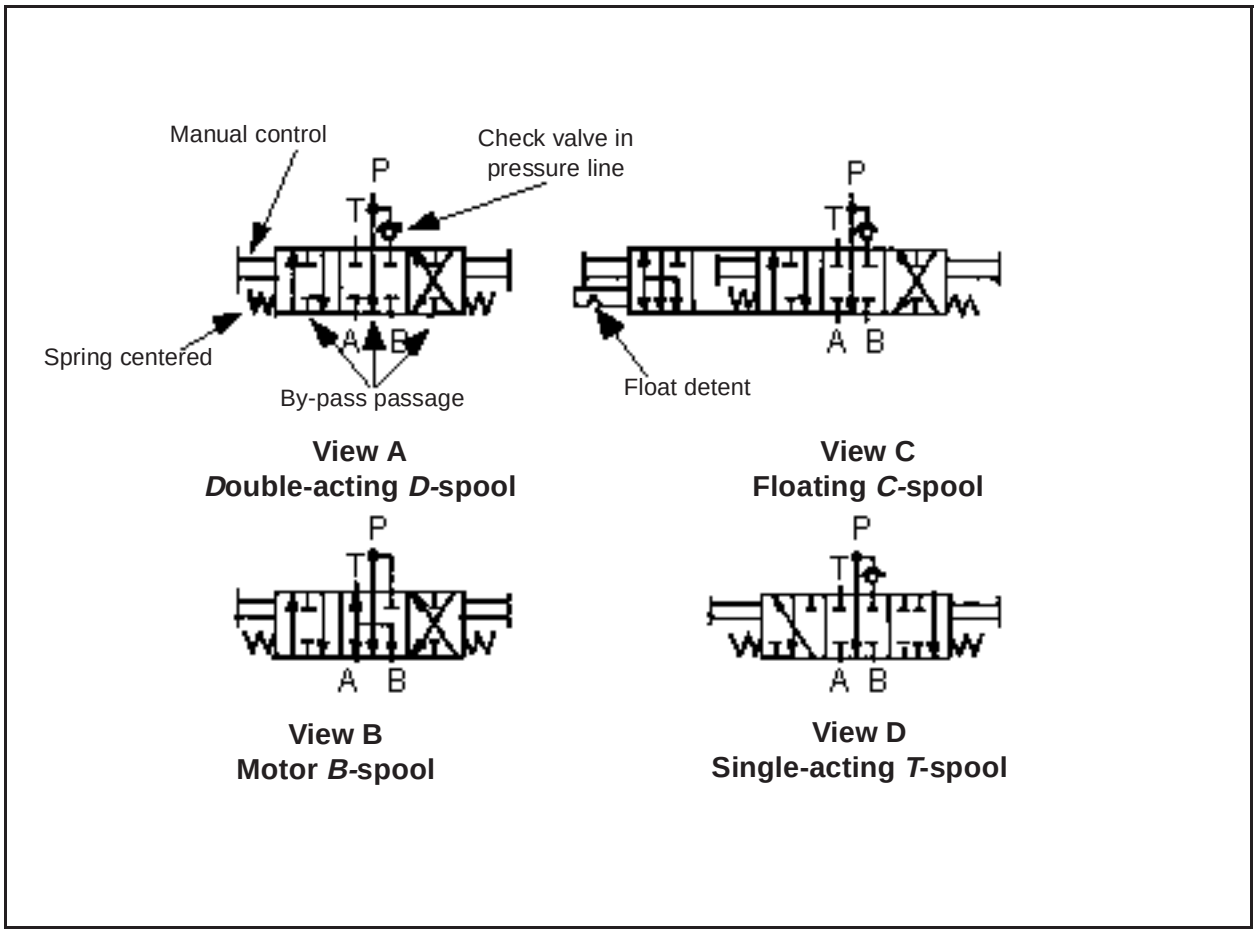

Figure 6-18. Mobile directional-control-valve symbol

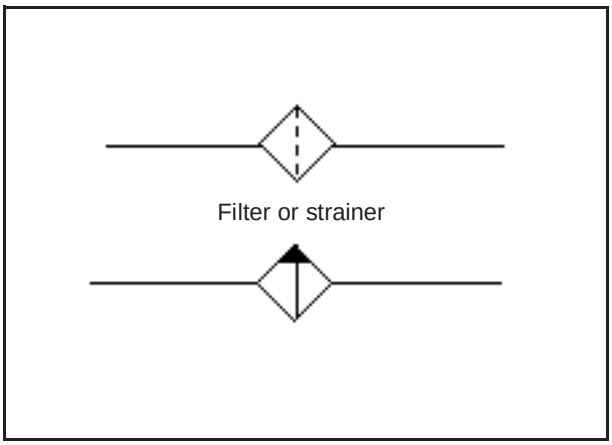

Figure 6-19. Fluid-conditioner symbols

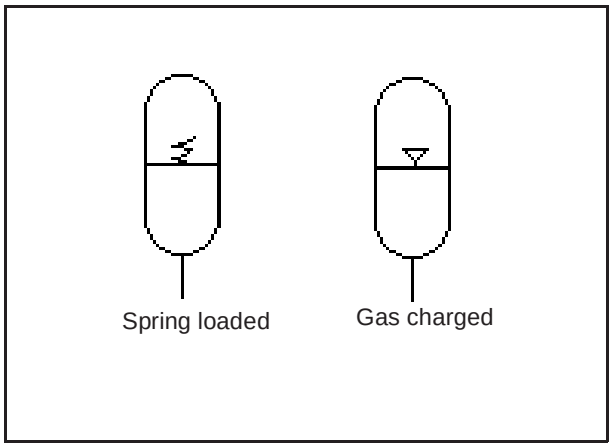

Figure 6-20. Accumulator symbol

6-3. Typical Mobile Circuits. Hydraulic-lift, power-steering, and road-patrol-truck circuits are considered typical mobile circuits.

a. *Hydraulic-Lift Circuit.* Figure 6-21 shows the lift portion of the hydraulic system. The circuit has two cylinders: a single-acting lift cylinder and a double-acting tilt cylinder. The lift cylinder moves the lifting fork up and down. The tilt cylinder tilts the mast back and forth to support or dump the load.

A two-section, multiple-unit directional valve controls the cylinder's operation. The first valve has a double-acting *D*-spool to operate the tilt cylinder, hydraulically, in either direction. The outer envelopes show the typical four flow paths for reversing the cylinder. The second valve has a single-acting *T*-spool to operate the lift cylinder. This cylinder is returned by gravity; the bypass unloads the pump.

The pump is driven by the lift truck's engine and supplies the circuit from the large volume end. The enclosure around the two pump symbols indicates that both pumping units are contained in a single assembly. The same applies to the two directional valves and the relief valve that are enclosed. They are in a single assembly.

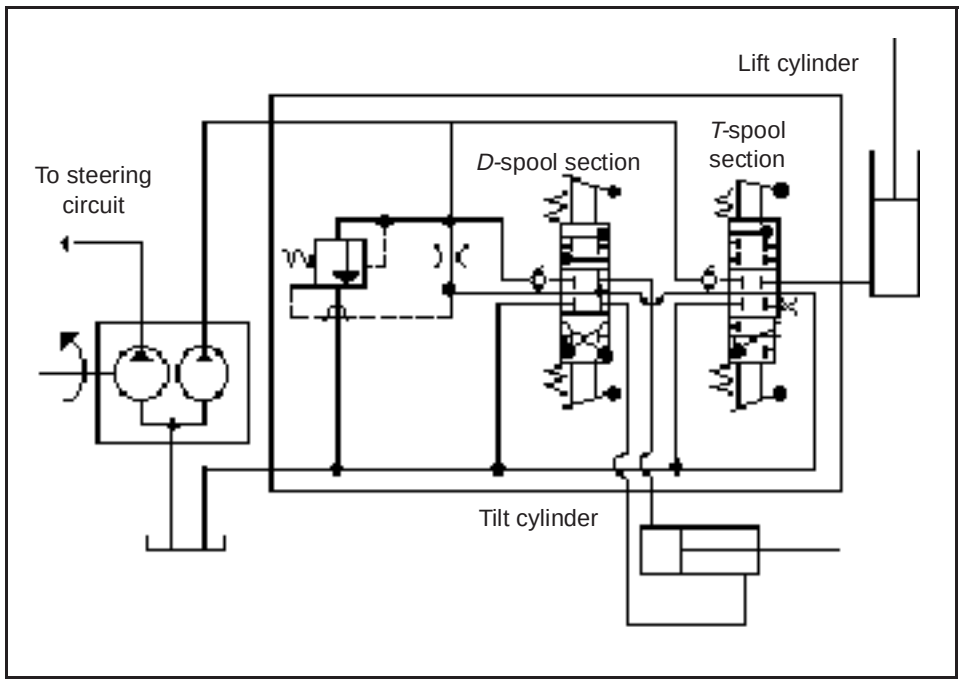

Figure 6-21. Hydraulic-lift circuit in neutral

Figure 6-21 shows the circuit in neutral; the valves are centered. If the figure were to show the operating mode, the outer envelopes on the valve symbols would be shifted over to align with the ports at the center envelopes. The arrows in the envelopes would then show the flow paths from the pressure inlet to the cylinders and/or the return flow to tank.

b. *Power-Steering Circuits.* Hydraulic power steering incorporates a hydraulic boost into a basic manual-steering system. A basic manual-steering system is an arrangement of gears in a box that multiplies the input torque from the steering wheel to a much greater torque at the steering shaft (Figure 6-22). The steering shaft, through the pitman arm (or steering-shaft arm), transmits this increased torque through the steering linkage to the steering arms that turn the wheels. The basic system of manual-steering gears and steering linkage is a steering wheel, steering gear, and linkage to the steered wheel.

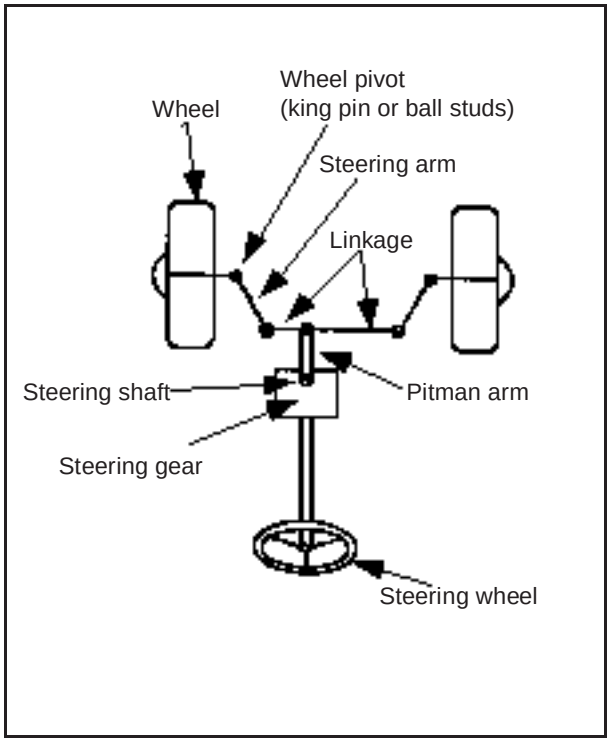

Figure 6-22. Manual-steering-gear layout

The hydraulic boost, which is a mechanically operated hydraulic servo, may be applied to the steering linkage (Figure 6-23) or within the steering gear. Steering-wheel movement actuates the steering valve, which directs the fluid under pressure to the steering-valve body that follows the valve spool. Hydraulic boost is applied only when the steering wheel is being moved.

An integral power-steering system has the hydraulic-boost subsystem built into the mechanical steering gear. The steering valve is actuated by moving the steering shaft. The valve controls the operation of the power cylinder. Thrust from the power cylinder is transmitted directly to the steering shaft. Road shock transmitted back from the wheels is taken up in the steering gear.

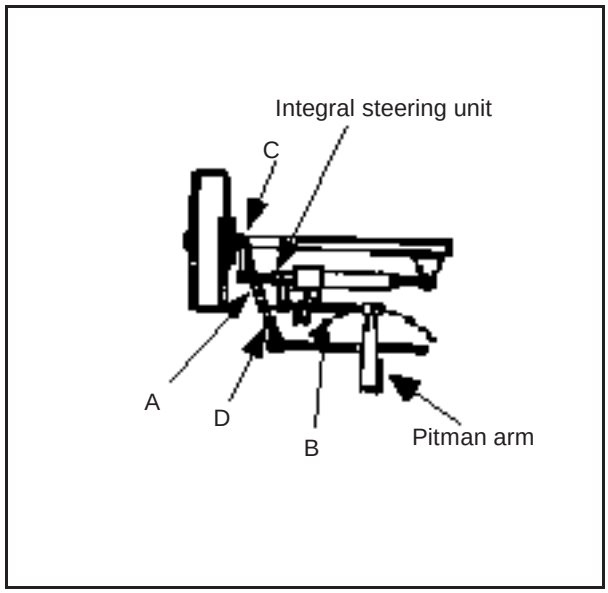

Figure 6-23. Power-steering layout

Figure 6-24, page 6-13, shows the semi-integral power-steering system, or valve-on-gear system. The steering valve is built into the steering gear. The power cylinder is attached to the vehicle's frame and to the linkage. Road shock and thrust are absorbed in the frame.

c. *Road-Patrol-Truck Circuits.* Figure 6-25, page 6-14, diagrams A and B respectively, shows a road-patrol truck's hydraulic system and a hydraulic circuit's schematic, as a comparison. The truck needs three double-acting

cylinders to operate its blades and dump body: a plow hoist cylinder for the front plow, an underblade cylinder, and a dump-body hoist cylinder. The truck also has a power-steering system operated from one-half of the double pump. (The steering system has been omitted from diagram B). The schematic shows that the three cylinders are operated through a three-spool, mobile directional valve fed from the large volume end of the double pump.

6-4. Troubleshooting. Personnel should follow a system when troubleshooting. The following shows the STOP system:

- **S**tudy the circuit diagrams.
- **T**est by using a reliable tester.
- **O**rganize the knowledge gained from the circuit-test results.
- **P**erform repairs, taking time to do the job well.

a. *Causes of Improper Operations.* If improper operation does occur, the cause can generally be traced to one of the following:

- Use of the wrong oil viscosity or type.
- Insufficient fluid in the system.
- Presence of air in the system.
- Mechanical damage or structural failure.
- Internal or external leakage.
- Dirt, decomposed packing, water, sludge, rust, and other foreign matter in the system.
- Improper adjustments.
- Heat exchanger that is plugged, dirty, or leaking.

b. *Testing a Hydraulic Circuit.* To test complete or individual parts of a hydraulic circuit, use a hydraulic circuit tester (see paragraph 2-8, page 2-18). The best tester to use is a compact portable unit that can check flow, pressure, and temperature.

c. *Comparing Test Results with Specifications.* Hydraulic-powered systems are power-transmission systems. The only purpose of the components and the circuit is the controlled transfer of power from the motor shaft to the point of effective work.

$$HP = \frac{fp}{1,714}$$

where—

HP = hydraulic horsepower

f = flow, in GPM

p = pressure, in psi

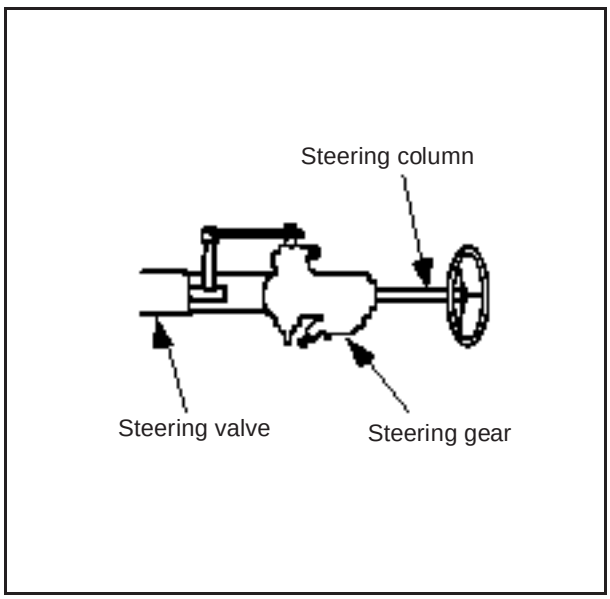

Figure 6-24. Semi-integral power-steering system

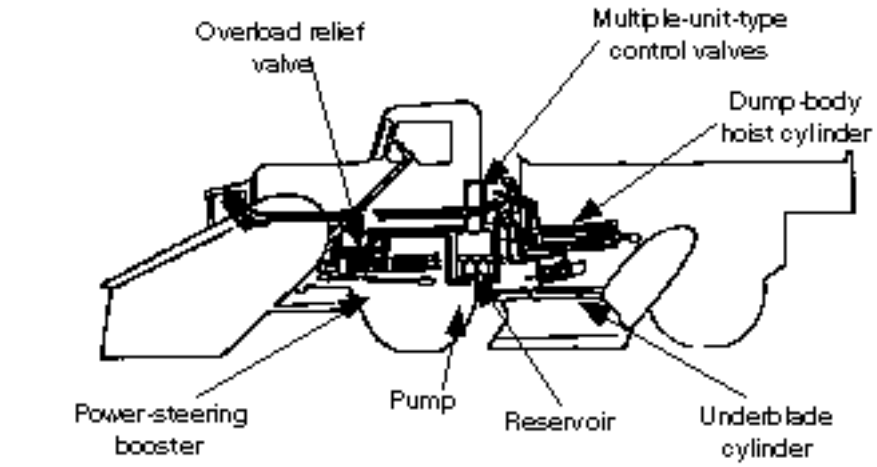

VIEW A
TRUCK HYDRAULIC SYSTEM

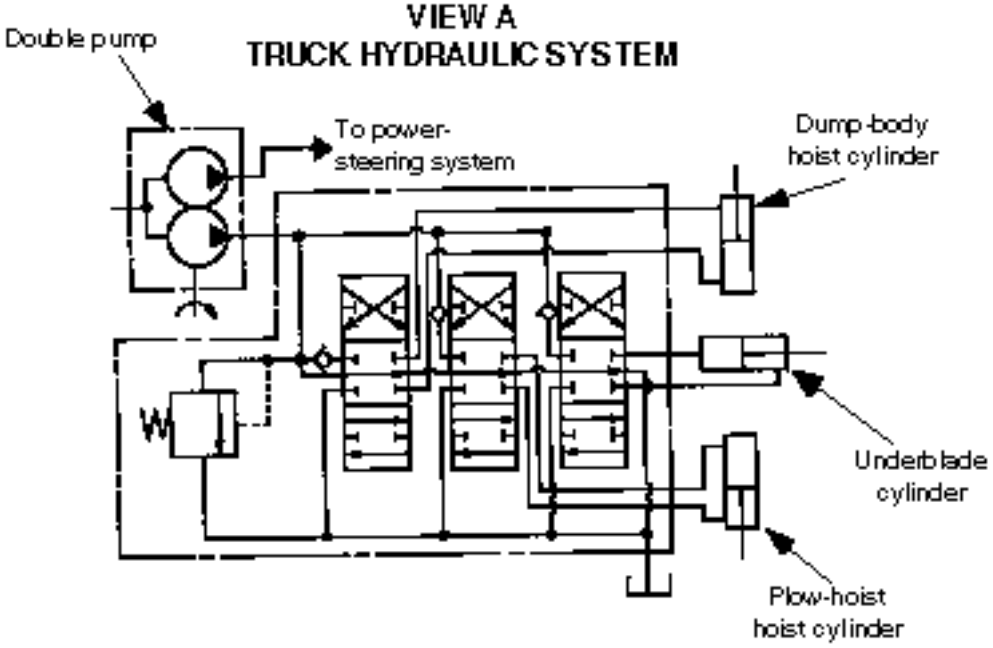

VIEW B
MOBILE DIRECTIONAL VALVE WITH 3 OPERATING SECTIONS AND INTEGRAL RELIEF VALVE

Figure 6-25. Hydraulic circuit diagram for a road-patrol truck

By measuring those two factors at the same time, it is possible to read the effective output at any point. Comparing test results with specifications will give the necessary fault-finding facts.

d. *Slippage.* All hydraulic systems have some slippage (see paragraph 3-4, page, page 3-3) even when new. As wear increases, slippage at wear points increases, causing a decrease in GPM. However, system pressure is maintained. In time, wear can be so great that all flow is lost. Only at a complete breakdown will a pressure gauge show where the trouble is. Conducting a flow, pressure, and temperature (FPT) test would have indicated such a problem and avoided a complete breakdown.

NOTE: At low oil temperature and low pressure (or light loads) the machine will continue to operate but at less speed.

e. *Flow and Pressure.* Always test flow and pressure together. Connect a hydraulic tester into the hydraulic circuit at various points to isolate and check components (pumps, valves, or cylinders) for efficiency. Figure 6-26 shows a hydraulic tester, connected to the pump's output, checking the flow at various pressures that, in turn, checks the pump's performance against the recommended specification. When isolating and testing individual components with a hydraulic tester, direct the return fluid to the reservoir. If the fluid returns to the reservoir through the system's piping, you will not get a correct reading because of buildup of back pressure.

Test the whole circuit as described, and then isolate portions and test for a complete analysis of the system. If a test on a full circuit indicates a malfunction, isolate a portion and test the remaining portions until you find the malfunctioning part. Generally, cylinders will fail first. Packing will wear because of friction and loading against the cylinder walls. Therefore, isolate the cylinders first. If test results indicate that the circuit is operating properly, the cylinders have a problem. During testing, determine the setting and condition of the relief valve. If further tests are necessary, isolate the directional-control valve to check the pump's efficiency and inlet hose.

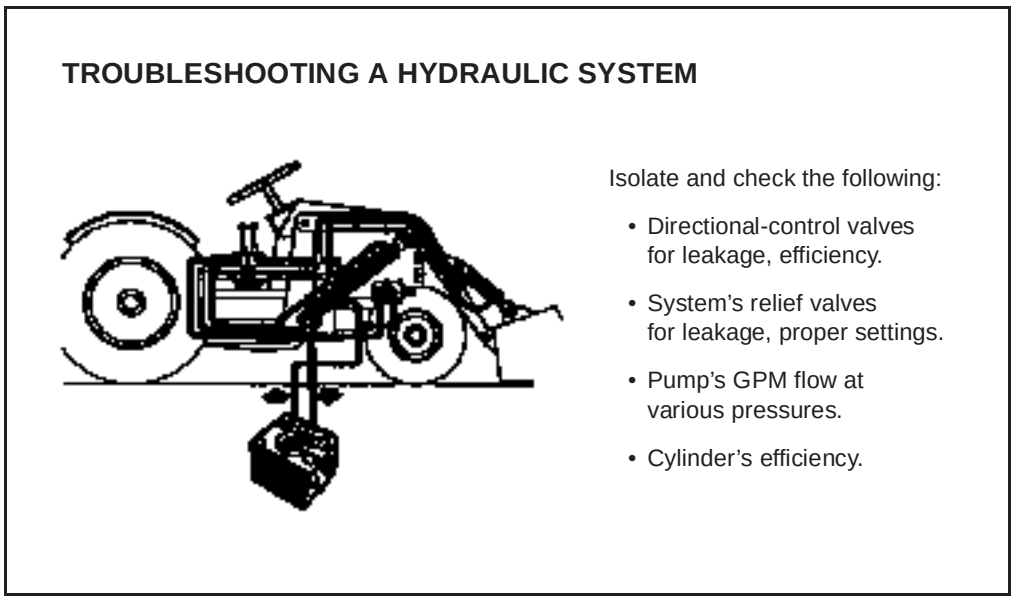

Figure 6-26. Hydraulic tester connected to a pump's output

f. *Other Conditions.* Other problems could occur that are not directly related to nor caused by the various parts of the hydraulic system. These problems could show the same

general malfunctions of an improperly operating system. Examples are leaking hose, packing glands, and seals, which would be visually evident; a bind in the directional-control valve or the cylinder's piston rod; a dented or deformed hydraulic cylinder; or a crimped or restricted pressure line, which would be harder to detect.

g. *Specific Troubles, Causes, and Solutions.* Tables 6-1 through 6-5, pages 6-17 through 6-21 list some possible problems and solutions in a hydraulic system.

Table 6-1. Problems and solutions with pump operations

No Fuel Delivery	
Problems	**Solutions**
Fluid level in the reservoir is low.	Add the recommended oil; check the level on both sides of the tank's baffle to be certain that the pump suction is submerged.
Oil intake pipe or inlet filter is plugged.	Clean the filter; otherwise, remove the obstruction.
Air leak in the inlet line prevents priming or causes noise and irregular action of the control circuit.	Repair the leaks.
The pump shaft turns too slowly to prime itself (vane-type pumps only).	Check the appropriate manual's minimum speed recommendations.
The oil viscosity is too heavy to pick up the prime.	Use a lighter oil viscosity; follow the appropriate manual's recommended temperatures and services.
Shaft rotates in the wrong direction.	Reverse the rotation immediately to prevent seizure and parts from breaking due to lack of oil.
Pump shaft is broken, parts are broken inside the pump, or the shear pin or shear linkage is broken.	See the appropriate manual for replacement instructions.
Pump has dirt in it.	Dismantle and clean the pump; flush the system.
The stroke is incorrect on variable delivery pumps.	See the appropriate manual for instructions.
No Pressure in the System	
Pump does not deliver oil for any reasons given in above section.	Follow the remedies given.
• Relief-valve setting is not high enough. • Relief valve leaks. • Relief-valve spring is broken.	• Increase the pressure setting of the valve; check the appropriate manual for the correct pressure. • Check the seat for score marks and reseat. • Replace the spring and readjust the valve.
Vane is stuck in the rotor slots (vane-type pumps only).	Inspect for wedged chips; inspect the oil for excessive viscosity.
The head is loose (very infrequent occurrence).	Tighten the head; check the appropriate manuals before tightening.
Oil to the tank recirculates freely through the system.	Check to see if a return line is open due to either a directional valve set in the open-center neutral position or some other valve is left open.
Control valves have internal leakage.	Block off various parts of the circuit to determine where the leak is; repair when located.
Noisy Pump	
Intake line, filter, or restricted intake pipe is partially clogged.	Clean out the intake or strainer, or eliminate the restrictions; ensure that the inlet line is open.

Table 6-1. Problems and solutions with pump operations (continued)

Noisy Pump (continued)	
Problems	**Solutions**
• Air leaks occur at the pump's intake piping joints. • Air leaks are present at the pump's shaft packing. • Air is drawn in through the inlet pipe openings.	• Pour oil on the joints while listening for a change in the operating sounds; tighten the joints as required. • Pour oil around the shaft while listening for a change in the operating sounds; follow the appropriate manual instructions when changing the packing. • Ensure that the inlet and return lines are well below the oil level in the reservoir; add oil to the reservoir if necessary.
Air bubbles are present in the intake oil.	Use hydraulic oil that has a foam depressant.
Reservoir's air vent is plugged.	Clean or replace the breather.
Pump is running too fast.	See the appropriate manuals for recommended maximum speeds.
Oil viscosity is too high.	Use a lower oil viscosity; check the appropriate manuals for the recommended temperatures and services.
Coupling is misaligned.	Realign the coupling.
Pump vane is stuck (vane-type pump).	Inspect the pump for wedged chips or sticky oil; reassemble.
Parts are worn or broken.	Replace worn or broken parts.
External Oil Leaks	
Shaft packing is worn.	Replace the worn parts.
A head of oil is present on an inlet-pipe connection.	Keep all the joints tight; slight leakage may be necessary.
Excessive Wear	
Abrasive matter in the hydraulic oil is being circulated through the pump.	Install an adequate filter or replace the oil more often.
Oil viscosity is too low for working conditions.	Check the appropriate manual's recommendations or the lubrication chart for information.
Sustained high pressure occurs above the maximum pump rating.	Check the relief or regular valve's maximum setting.
Drive is misaligned or belt drive is tight.	Check the parts; correct the problem.
Air recirculation is causing a chatter in the system.	Remove the air from the system.
Broken Parts Inside the Pump Housing	
Excessive pressure above the maximum pump rating is present.	Check the relief or regulator valve's maximum setting.
Seizure occurs due to lack of oil.	Check the reservoir level, oil filter, and possibility of restriction in the inlet line.
Solid matter is being wedged in the pump.	Install a filter in the suction line.
Head screws are too tight.	Check appropriate manual’s recommendations; adjust.

Table 6-2. Problems and solutions with actuating mechanism

Inoperative System	
Problems	**Solutions**
System fails because of any problem listed in Tables 6-1 through 6-5.	Follow recommened solution.
Mechanism Creeps (Stopped in Intermediate Position)	
Internal leakage occurs in the actuating cylinders or operating valves.	Replace the piston packing or cylinder, if the walls are scored; replace or repair the valve.
Longer Operating Times Than Specified	
Air is present in the system.	Bleed the system.
Actuating cylinder or directional-control valve has an internal leak.	Replace the piston packing or replace the cylinder if the walls are scored; replace or repair the valve; clean the unit to remove foreign matter; check the cam clearance.
Pump is worn.	Repair or replace the pump.
Action is sluggish on start up but less so after operating temperatures have increased, or action slows down after warm up. Depending on equipment and circuit design, could indicate that the oil viscosity is too high.	Check appropriate manual's lubrication order.
External Oil Leaks	
End caps leak.	Tighten caps, if possible, or replace the gasket.
Chevron seals leak.	Adjust or replace the seals.
Abnormal Packing-Gland Wear	
Cylinder is not securely fastened to the frame, causing it to vibrate.	Tighten the cylinder; check it periodically.
Cylinder and piston-rod extension are misaligned.	Check the parts; correct the problem.
Side load occurs on the piston rod.	Check for cylinder alignment or worn pins or ball joints.

Table 6-3. Problems and solutions with heating oil

Heating Caused by Power Unit (Reservoir, Pump, Relief Valve, Coolers)	
Problems	**Solutions**
Relief valve is set at a higher pressure than necessary; excess oil dissipated through increased slippage in various parts or through the relief valve or directional valve.	Check manual for the correct pressure; reset the relief valve.
Internal oil leaks occur due to wear in the pump.	Repair or replace the pump.
Oil viscosity is too high.	Check appropriate manual for correct oil viscosity to use at various temperatures.
Overhauled pumps may be assembled too tightly, which reduces clearances and increases friction.	Follow the appropriate manuals when rebuilding a pump.
Pump has leaking check or relief valves.	Repair or replace the valves.
Oil cooler or coolant functions improperly in cut off.	Inspect cooler; clean inside and outside; ensure that air flow or coolant flow around fins is not cut off.
Conditions in System Cause Excessive Heating	
Lines are restricted.	Replace the lines if they are crimped; remove any obstruction if lines are partially plugged.
Large pump deliveries do not unload properly.	Ensure that the open-center valves are neutralized and that any pressure-relieving valves are in the correct position. (Allow only small pumps to stay at high pressures when running idle for long periods.)
Radiation is insufficient.	Use artificial cooling.
Pump has internal leaks.	Locate leaks; replace the packing.
Reservoir is too small to provide adequate cooling.	Replace unit with a larger reservoir.
Valves or piping is undersized.	Check flow velocity through the lines and valves; compare them with the manual's recommendations. If velocity is excessive, install larger equipment.

Table 6-4. Problems and solutions with fluid motors

Motor Turns in the Wrong Direction	
Problems	**Solutions**
Conductors are crossed between the control valve and the motor.	Check circuit to determine the correct conductor connection between the control valve and motor.
Motor Does Not Turn or Does Not Develop Proper Speed or Torque	
System's overload-relief-valve adjustment is not set high enough.	Check system's pressure; reset the relief valve.
Relief valve sticks open.	Clean or replace the relief valve; adjust.
Oil to the reservoir freely recirculates through the system.	Check control-valve linkage; directional-control valve may be in open-center neutral.
Driven mechanism binds because of misalignment.	Check the motor shaft for alignment.
Pump does not deliver enough GPM or pressure.	Check pump's GPM and pressure; repair or replace.
Motor yoke is not set at the proper angle.	Adjust the pump's yoke angle.
External Oil Leak From the Motor	
Seals leak (drain may not be connected from motor to tank).	Check motor for 3rd line (a drain line that must go to tank used on piston and vane motors).
NOTE: See Table 6-1 for improper operation of pump.	

Table 6-5. Problems and solutions with accumulator operation

Sudden Drop in Accumulator Pressure (Position of Selector Valve is Changed)	
Problems	**Solutions**
Accumulator has an internal or external leak.	Repair the leak or replace the accumulator.
No Pressure When Pump Stops Running (Normal Pressure When Pump Was Running)	
Hydraulic line has a leaking gas or check valve.	Replace the check or the gas valve.
Sluggish Response for Accumulator	
Oil screen in the accumulator stops.	Dismantle the accumulator; clean the screen.
Gas precharge is not sufficient.	Precharge according to recommendations in the manual; check for gas leaks.
NOTE: Release all internal pressure before making repairs on accumulators.	

CHAPTER 7

Electrical Devices: Troubleshooting and Safety

This chapter describes the process of locating the cause of malfunctions in electrical circuits associated with hydraulic-control systems. The information includes testing devices and types of grounding points. Also addressed in this chapter are the safety measures personnel should take when working on or around electrical circuits.

7-1. Hydraulics and Electricity. Hydraulics and electricity are often compared because the systems have similarities. A hydraulic circuit requires a power source (usually a pump), a load device (actuator), and conductors. The circuits differ mainly in the—

- Types of devices used to control, direct, and regulate the hydraulic fluid flow.
- Type and capacity of the actuators used to accomplish the work, which varies, depending on the application.

An electrical circuit also requires a power source (battery, generator), a load device (light, bell, motor), and proper connections. An assortment of devices also controls, directs, and regulates the flow of electrical current.

Hydraulic and electrical components are usually represented on diagrams by their own set of standardized symbols. Electrical diagrams are often called schematics. Figure 7-1, page 7-2, shows some of the more common symbols. Hydraulic and electrical systems and circuits have many differences. For example, electrical current is invisible, hydraulic fluid is not; electrical current flows through solid wires, hydraulic fluid flows through hollow lines. Figure 7-2, page 7-3, shows symbols for electrical and hydraulic components. Figure 7-3, page 7-4, compares a hydraulic circuit and an electrical circuit.

7-2. Troubleshooting Electrical Devices. Electrical troubleshooting is the process of locating the cause of malfunctions in electrical circuits. The following paragraphs contain some general troubleshooting information as well as specific tests for determining the status of some electrical devices. Skill in troubleshooting electrical equipment and circuits requires—

- Knowledge of electrical principles to understand how a circuit or device should function.
- Skill in reading and interpreting electrical schematics, diagrams, product data, and so forth.
- Skill in operating test equipment and interpreting test measurements.
- Ability to analyze problems in a logical manner.

Following systematic steps that narrow down the problem to a smaller area of the equipment is much more efficient than trial-and-error methods. The troubleshooting

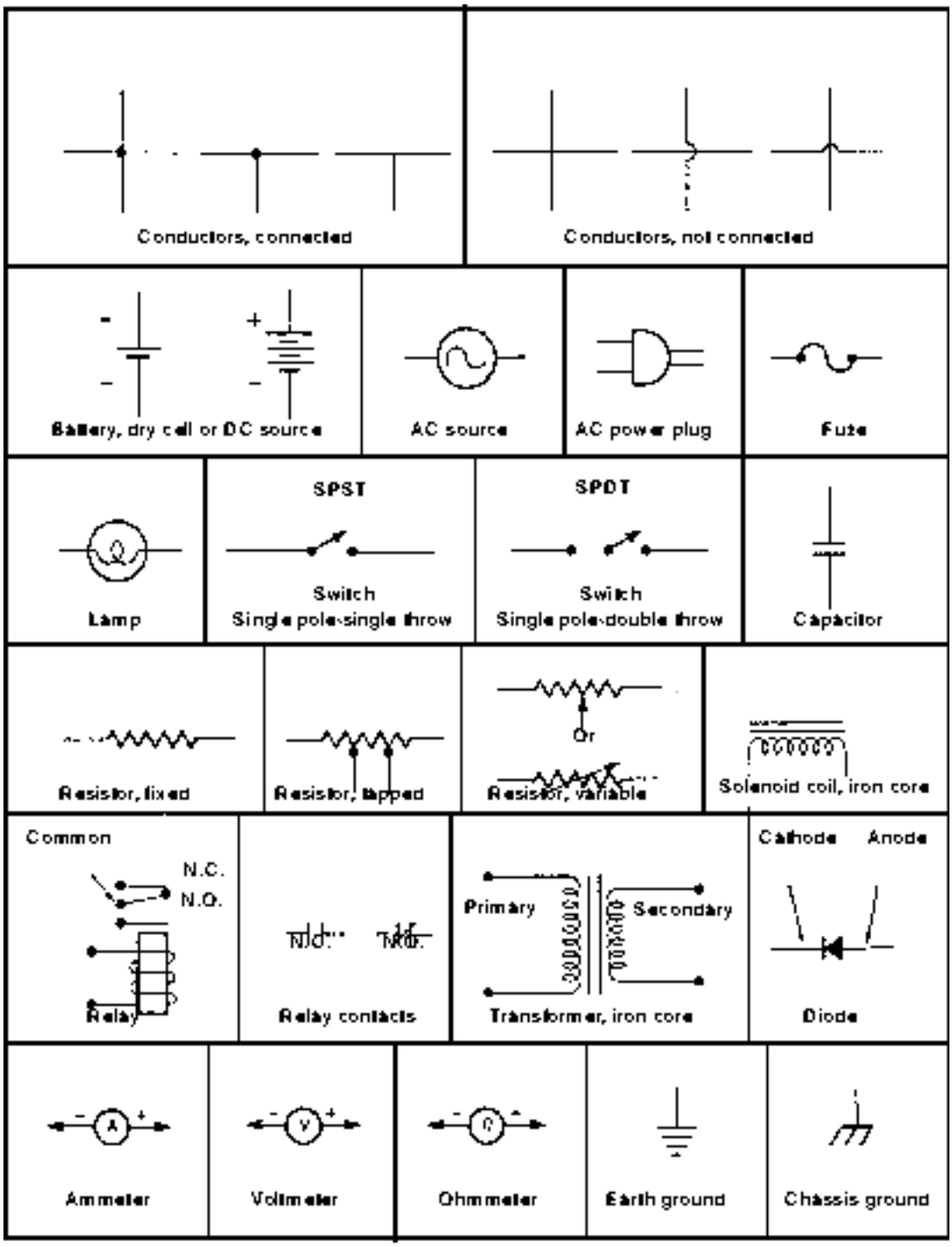

Figure 7-1. Common electrical schematic symbols

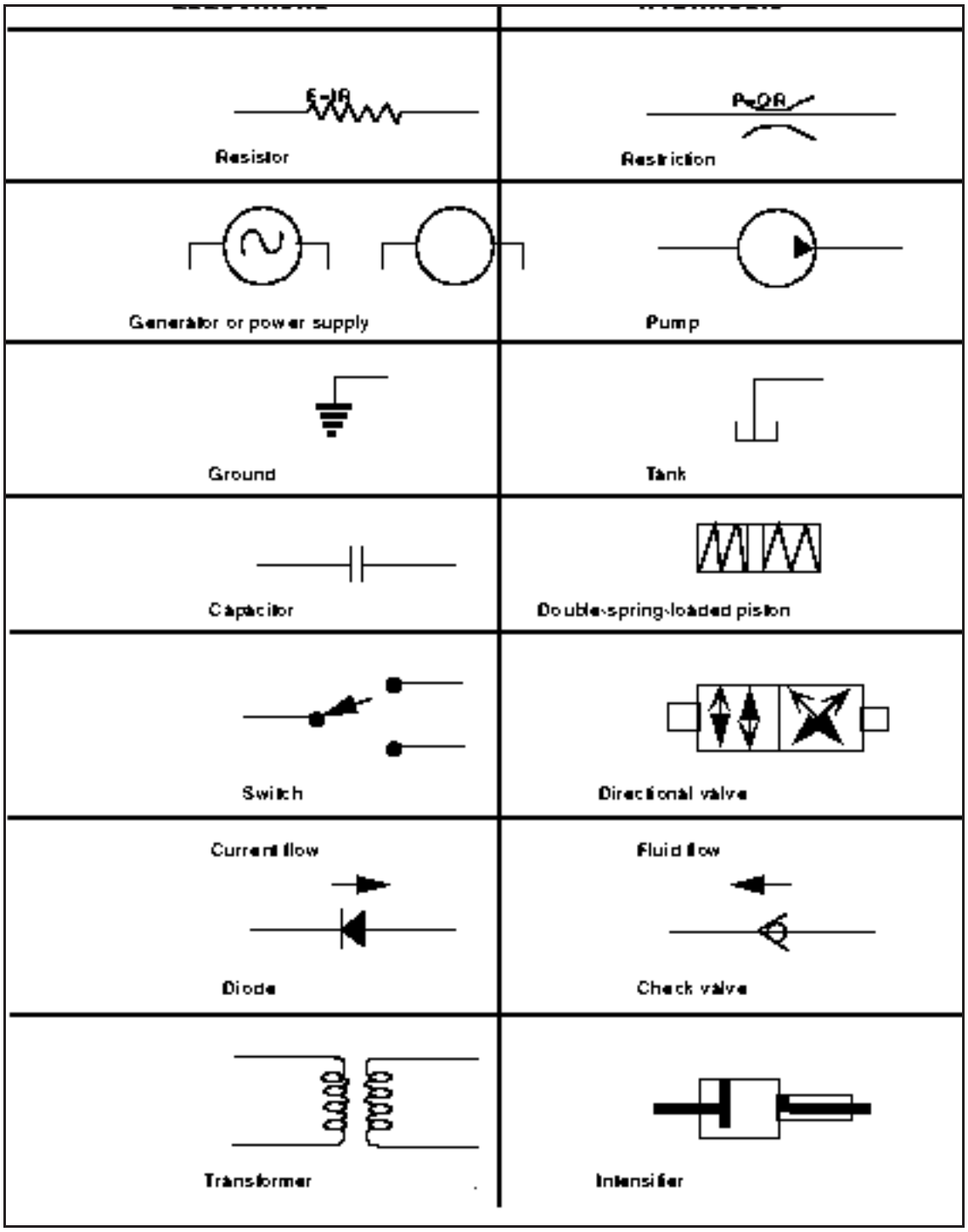

Figure 7-2. Comparison of electrical and hydraulic components

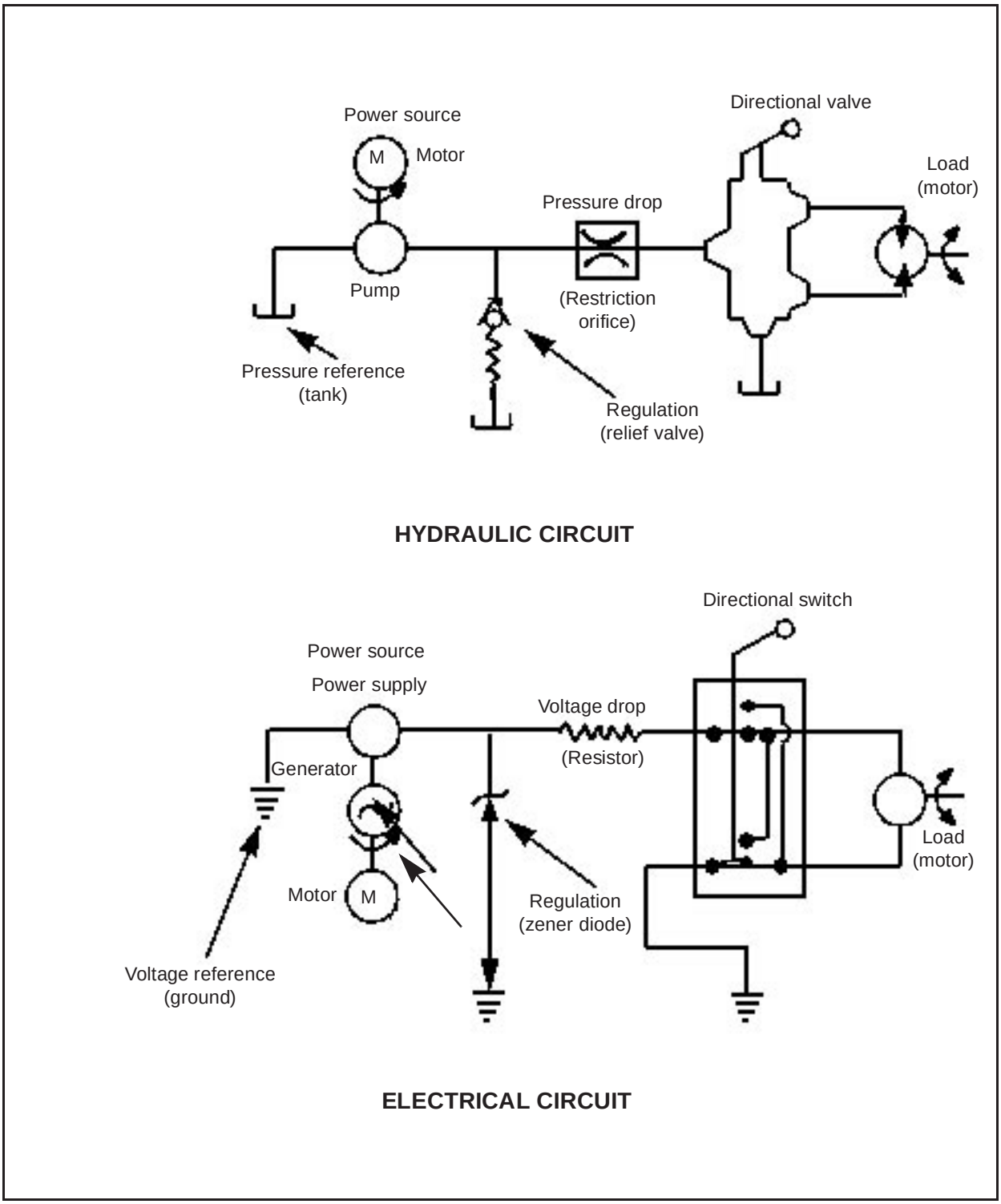

Figure 7-3. Comparison of electrical and hydraulic circuits

procedure detailed below can be very useful in organizing the problem-solving effort and reducing equipment downtime:

a. Procedure. The following troubleshooting procedure consists of five steps that you should perform in order. These steps represent the most reliable method of learning and applying a logical approach to problem solving and can be applied to any equipment, regardless of size.

(1) Step One: Identify the Symptom. A symptom is an external indication that a circuit or device is not functioning correctly. You can identify a symptom by investigating the problem by sight, sound, smell, and touch. For example, visually inspecting the equipment may reveal that a circuit component has overheated and changed color or that an indictor lamp which should be on is not. A peculiar odor may lead you to discover melted insulation, or a chattering noise could indicate that a solenoid is about to fail. Moving controls or adjusting knobs may change the problem or have no effect at all. The fact that the equipment is not operating is a symptom.

If someone else was operating the equipment when it failed, ask the person if he noticed anything unusual before it failed. Funny noises, things that do not look quite right, and improper operating sequences are symptoms that could lead to the cause of the problem. If you cannot find any immediately identifiable symptoms, try operating the equipment once you determine that it is safe to do so. Watch what works and what does not work. Note anything that does not seem right, no matter how small. Take the time to conduct a thorough investigation.

(2) Step Two: Analyze the Symptom. In this step, you identify the functions where symptoms indicate a malfunction. Use the information you obtained during your identification, along with the schematic and functional block diagrams and knowledge of how the equipment is supposed to operate, to make logical technical deductions. For example, after careful examination, you find that a clamp in a plastic-injection molding machine will not pressurize. Further analysis, without using test equipment, narrows the problem to a clamp that is closed, clamp pressurization, or prefill shift, any of which might contain the faulty circuit.

(3) Step Three: Isolate the Single Faulty Function. In this step, you use test equipment to decide which faulty function is actually causing the malfunction. When making these tests, use the following guidelines:

- Make only those tests that are safe to make.
- Make the least difficult tests first.
- Test those functions first that will eliminate one or more of the other possible faulty functions.

For example, if taking an ohmmeter reading can determine the fault, do not take a voltmeter reading as that requires power on the equipment. If you must disassemble half of the machine to reach a test point, perform a simpler test first. Test at a midway point in the circuitry, if possible. A good reading at the midway point eliminates the preceding functions and indicates that the problem is in the remaining circuits. A faulty signal at the midway point means that the problem is in the functions that process the signal before the midway point.

In the injection molding example, test the clamp's pressurization circuits where the clamp's fully closed signal input either eliminates that function or confirms that the cause of the problem is a clamp that is not fully closed and, therefore, cannot be pressurized. Continue testing inputs and outputs of the suspect functions until you identify and confirm the single faulty function.

(4) Step Four: Isolate the Faulty Circuit. In this step, you locate the single malfunctioning circuit within a functional group of circuits. Use the accumulated symptom and test data to close in on the single faulty circuit. Follow the guidelines from step three, but apply them to the circuits related to the faulty function. Use schematic and block diagrams to locate test points.

In the injection-molding-machine example, assume that the clamp's fully closed signal is not present at the input to the clamp's pressurization circuits. Test within the clamp's closed circuits until you identify a single faulty circuit. The first test may reveal that the output of the clamp's fully closed circuit is bad. A check of the inputs to this circuit may indicate that the input from a clamp's closed-limit switch is bad but that all others are good. You can now identify the problem as being associated with one of the relatively few parts contained in a single circuit.

(5) Step Five: Locate/Verify the Cause of the Malfunction. The tests you make in this step identify the failing part within the faulty circuit. Test the circuit until you find the cause of the malfunction. Examine and test the faulty part to verify that it has caused the problem and produced the observed symptoms.

In checking out the clamp's fully closed circuit, for example, remove the suspected limit switch from the circuit and test it with an ohmmeter to determine if the switch's contacts are closing correctly to complete the circuit. Connect the ohmmeter across the contacts of the switch and actuate the switch's arm several times while checking the meter reading. If the contacts close properly, the meter should read zero ohms when the arm is in one position and infinity when the arm is in the other position.

If the meter pointer does not move when the switch arm is actuated, disassemble and examine the switch. If this last examination reveals that the mechanical linkage connecting the switch's arm to the contacts is broken, then you have found the cause of the malfunction. A final analysis should show that this cause explains the observed symptoms. However, the procedure is not complete until you verify the findings. In this example, you would install a new limit switch in the circuit and operate the equipment to confirm that you have fixed the problem.

b. Testing Devices. The following paragraphs outline some basic electrical tests that you can conduct on specific pieces of equipment that were discussed earlier. As part of a troubleshooting test, you should mechanically inspect these devices. Also, if spare parts are available, substitute a good part for a suspect part as a quick method of returning the equipment to operation. Test the suspect part and either repair it or discard it.

(1) Potentiometer. Since a potentiometer is a variable-resistance device, it should be disconnected from its circuit and tested with an ohmmeter, if it is suspect. Only two of the three leads need to be disconnected for this test. Be very careful when adjusting small potentiometers on printed circuit boards. They are quite fragile and can easily be broken if rotated beyond the end stops. Test a potentiometer as follows:

- Determine the expected resistance value from a schematic diagram for the circuit. The value may also be printed on the case of the device.
- Connect the ohmmeter across the ends of the potentiometer and confirm that the reading matches the expected value.
- Remove a test lead from one end and move it to the middle terminal.
- Rotate the shaft or turn the screw that varies the resistance of the device. The ohmmeter reading should indicate zero ohms at one end of the shaft rotation and the full expected resistance value of the potentiometer at the other end. It should also show a smooth change in resistance as the shaft is turned.
- Move the lead that is still connected to an end terminal over to the other end.
- Rotate the shaft again while looking for the same smooth transition from zero to maximum resistance.

(2) Solenoid Coil. If a solenoid is thought to be faulty, do the following:

- Remove it from the machine (plug the opened ports on the valves if necessary).
- Disassemble and examine the solenoid for signs of overheating or mechanical problems.
- Test the solenoid coil by attaching an ohmmeter (set to a low resistance range) across the coil terminals. If the coil is good, the meter will show a relatively low reading (a few thousand ohms or less). A zero reading would indicate that the coil windings are shorted to each other, probably as a result of melted insulation. An infinity reading on the ohmmeter means that the coil has opened up and is defective.

(3) Relay. Test a suspect relay as follows:

- Actuate the relay armature, manually.
- Remove the relay from the equipment.
- Examine the relay carefully for signs of mechanical problems.
- Check the relay coil in the same way as a solenoid coil, if you do not find any mechanical problems. Test the electrical contacts with an ohmmeter as you do the switch contacts. The meter should read zero when the contacts are closed and infinity when they are open.
- Test the normally open and the normally closed circuits.

(4) Transformer. When you determine, by voltage readings or symptom information, that a transformer may be the cause of a malfunction, check the primary and the secondary coil resistance with an ohmmeter. Disconnect one end of the primary winding and one end of the secondary winding from the rest of the circuit before testing. If the failure is the result of an open winding, the ohmmeter will read infinity when connected across the defective winding. If the failure is caused by shorted turns within a winding, the problem is more difficult to diagnose because the ohmmeter will indicate a very low resistance. Since a winding consists of a length of conductor wound into a coil, the resistance readings are normally quite low anyway. If you suspect shorted turns—

- Use the expected primary and secondary operating voltages to determine the approximate turns ratio. Divide the secondary voltage into the primary voltage to get the ratio. For example, 120 volts divided by 24 volts equals a ratio of 5:1.

- Use this ratio to compare the measured primary resistance to the measured secondary resistance. In the example, if the primary resistance is 20 ohms, then the secondary resistance should be about 4 ohms (20/5).

Be sure to adjust the zero-ohms control before making the measurement; hold the test probes by the insulated portion only. You may have difficulty determining if the reading is accurate since the measurement is so close to the low end of the ohms scale. Compare the readings to a replacement transformer's, if one is available. To positively verify that the transformer is faulty, you may have to substitute a good transformer for the suspect one.

(5) Diode. You can use a simple resistance check with an ohmmeter to test a diode's ability to pass current in one direction only. To test a suspect diode—

- Remove one end of the diode from the circuit.
- Connect the positive ohmmeter lead to the anode and the negative lead to the cathode. When the ohmmeter is connected this way, the diode is forward biased, and the measured reading should be very low. Set the ohmmeter for the appropriate diode test range.
- Reverse the ohmmeter connections. When the negative ohmmeter lead is attached to the anode and the positive lead is attached to the cathode, the diode is reverse biased, and the meter should read a high resistance.

A good diode should have real low resistance when forward biased and high resistance when reverse biased. If the diode reads a high resistance in both directions, it is probably open. If the readings are low in both directions, the diode is shorted. A defective diode could show a difference in forward and backward resistance. In this case, the ratio of forward to backward resistance is the important factor. The actual ratio depends on the type of diode. As a rule of thumb, a small signal diode should have a ratio of several hundred to one. A power rectifier can operate with a ratio as low as ten to one.

7-3. Ground. Every electrical circuit has a point of reference to which all circuit voltages are compared. This reference point is called ground, and circuit voltages are either positive or negative with respect to ground. Connections to ground that are made for safety reasons refer to earth ground. When voltage measurements are taken, the difference of potential between a point in the circuit and a ground point is measured by the voltmeter. This type of ground is referred to as chassis or common ground.

a. Earth Ground. Initially, ground referred to the earth itself and since has represented a point of zero potential or zero volts. A short circuit within a device that connects live voltage to the frame could cause a serious shock to anyone touching it. However, if the frame is connected to earth ground, it is held at the safe potential of zero volts, as the earth itself absorbs the voltage.

Today, a third prong on grounded power plugs connects most stationary equipment to earth ground through the electrical wiring system. Some equipment is connected to earth ground by a conductor that goes from the metal frame of the equipment to a long copper rod that is driven into the earth. Some appliances are often grounded by connecting the conductor to a water pipe running into the ground. In any case, the frames of all equipment connected to the earth are at the same zero volt potential. This prevents shocks that might occur should a person touch two pieces of ungrounded equipment at the same time.

b. Chassis or Common Ground. In some cases, electrical circuits used today are not connected directly to earth ground; however, they still require a point of reference or a common point to which elements of each circuit are connected. For example, a portable battery-operated transistor radio does not have a ground conductor connecting it with the earth. A strip of conducting foil on the internal circuit board is used as the common point. In an automobile battery, the negative terminal is generally connected to the engine block or chassis frame by a heavy cable. The connecting point, as well as every other point on the metal frame, is considered to be a ground for the electrical circuits of the vehicle. The rubber tires insulate the vehicle from the earth ground. In these examples, ground is simply a zero reference point in an electrical circuit and is referred to as chassis ground. All voltages in the circuit are measured with respect to this common point.

c. Zero Reference Point. Without a zero reference point, voltage could not be expressed as a positive or negative value. The schematic diagrams in Figure 7-4 illustrate this point:

- Diagram A shows a voltmeter connected to the two terminals of a 6-volt, dry-cell battery. Without a ground in the circuit, the measured voltage is 6 volts between the two terminals. It is neither positive nor negative.
- Diagram B shows that the negative battery terminal is connected to ground. The voltmeter measures the difference of potential between the positive terminal and

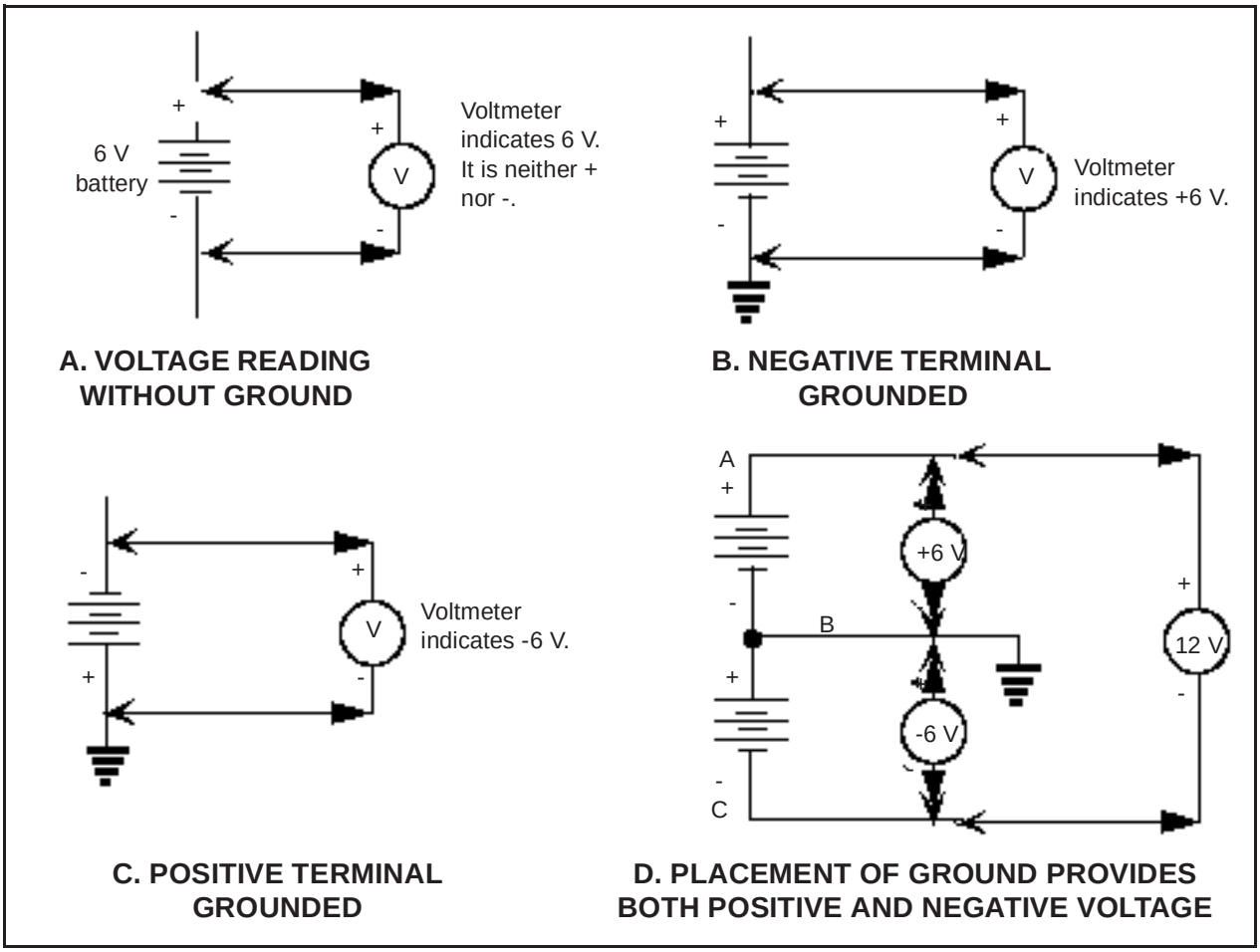

Figure 7-4. Schematic diagrams illustrating zero reference point

the ground point. The measured voltage is +6 volts because the ungrounded terminal is 6 volts more positive than the ground or zero reference point.

- Diagram C shows that the voltmeter measure -6 volts when the positive terminal of the battery is connected to the zero reference point. The ungrounded battery terminal is now 6 volts more negative than the reference point.
- Diagram D shows two 6-volt batteries that are connected in series. The voltage between points A and C is 12 volts. When a ground is placed at point B, which is between the two batteries, + 6 volts are available between points A and B, and -6 volts are available between points C and B. (Many modern electronic circuits require both positive and negative voltage for proper operation. This would be impossible without a zero reference point in the circuit.)

d. Isolation Between Earth and Chassis Ground. Industrial equipment often requires an earth and a separate chassis ground for proper operation. The earth ground represents an actual potential of zero volts, while the chassis ground is used only as a reference point and may be at some potential above or below the earth ground. In these cases, the earth ground and the chassis ground are not connected together at any point in the equipment. However, during installation or repairs, the chassis ground may be inadvertently connected to the earth ground. To check for this condition, use a 1.5-volt, D-cell battery and holder, connecting wires, and a voltmeter. Make sure that the equipment is OFF before making the test.

In Figure 7-5, the battery is installed between the chassis ground and the earth ground. The voltmeter, set to measure 1.5 volts direct current (DC), is connected across the battery. If a connection exists between the chassis and the earth ground, it will place a short circuit across the battery, and the voltmeter will indicate zero volts. If this is the case, temporarily disconnect one end of the battery to keep it from discharging while looking for the improper connection between the grounds. When you find the connection, remove it and reconnect the battery and the meter. The voltmeter should read the battery potential of 1.5 volts. If the voltmeter reading is still zero volts, an improper connection still exists in the equipment. Repeat the test until the voltmeter reads the battery voltage. Remember to disconnect the battery after completing the test.

7-4. Safety. Effective safety measures are a blend of common sense and the knowledge of basic electrical and hydraulic principles and of how a system or circuit operates, including any dangers associated with that operation. General safety information and safety practices are listed below. The list is not all inclusive, is not intended to alter or replace currently established safety practices, and does not include safety practices for hydraulic equipment.

a. Information. When working with electrical equipment, consider the following information regarding safety:

- Injuries associated with electrical work may include electrical shocks; burns; and puncture, laceration, or abrasion wounds.
- Current flowing through the body can be fatal. As little as 0.01 amp produces muscle paralysis and extreme breathing difficulty in the average person; permanent physical damage and death can result from 0.1 amp flowing through the heart.
- The amount of current received from an electrical shock depends on the voltage applied and the resistance of that part of the body through which the current

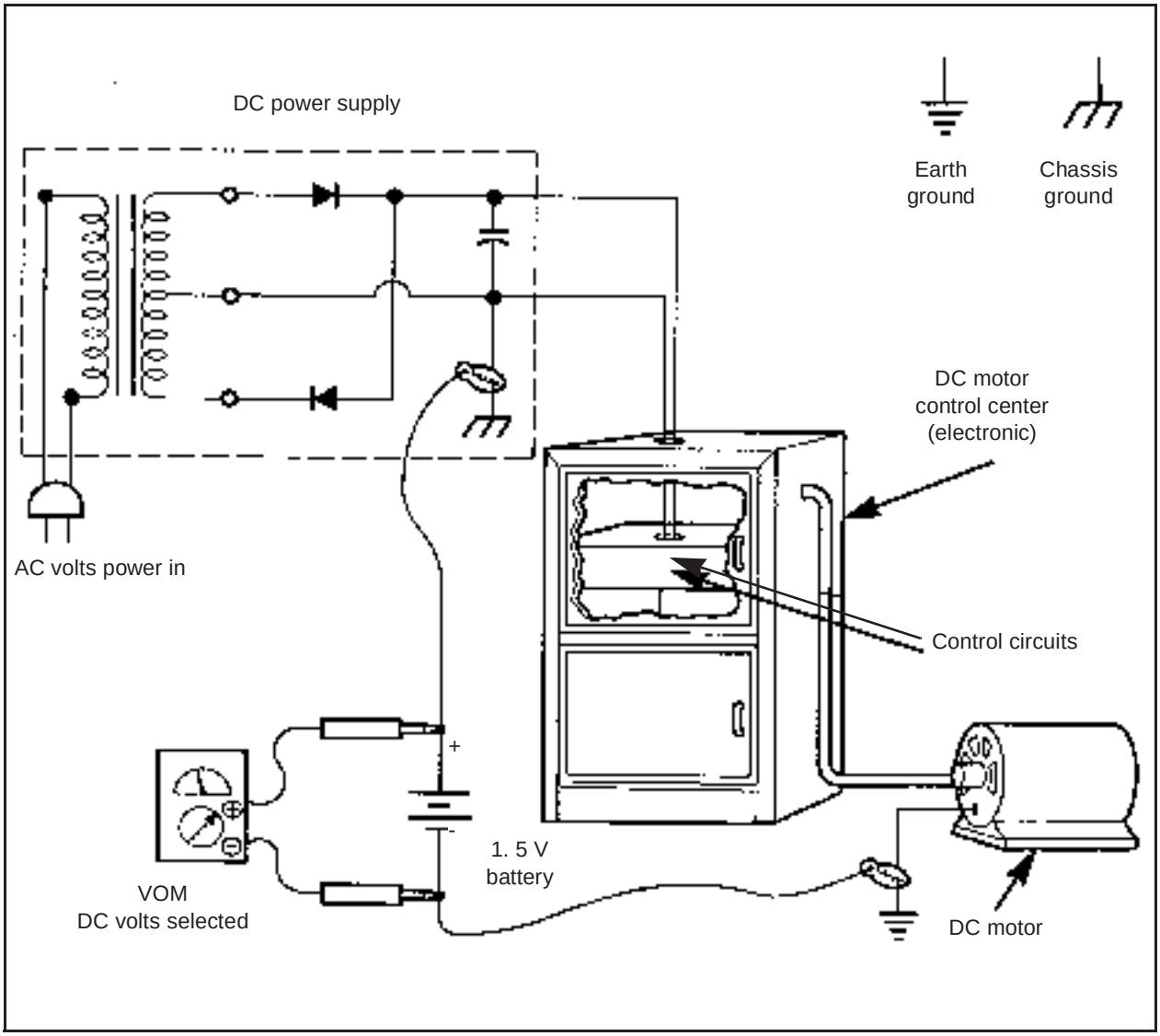

Figure 7-5. Battery installed between earth ground and chassis ground

flows. About 30 volts can produce 0.1 amp, so use extreme caution when working with circuits that include voltages higher than 30 amps.

- Most electrical shocks are unexpected. Even ones that are not particularly dangerous could cause you to jerk your hand into heavier currents or hit some sharp object. Always check to see that the power is turned off before placing your hand in a circuit.

b. Practices. When working with electrical equipment, consider the following safety rules:

- Never put both hands in a live circuit as this provides a path for a current flow through the heart. Keep one hand behind you or in your pocket when taking measurements with a meter.

- Never work on live circuits when wet, as this lowers the body's resistance and increases the chance for a fatal shock.
- Never work alone on electrical equipment. Shocks above 0.01 amp can paralyze your muscles and leave you unable to remove yourself from the source of the current flow. Always be sure someone else is around to help in an emergency.
- Use the proper equipment for circuit testing. Check for correct junction settings, range switches, proper insulation on test probes, and so forth.
- Remove all watches, rings, chains, and any other metal jewelry that may come in contact with an electrical potential or get caught in moving mechanical parts. Do this before you work on any electrical equipment, circuit, or battery.
- Have a good understanding about the circuit you are working on. Think about what you need to do before working on the circuit. Ask for help if you do not know enough about the task you are to perform.

Appendix A

Metric Conversion Chart

A-1. Purpose. This chart complies with current Army directives which state that the Metric System will be incorporated into all new publications. This Appendix will provide a chart to convert the English measurements to Metric.

Table A-1. Metric conversion chart

To Convert	Into	Multiply By
Cubic feet	Cubic Centimeters	$28,320.0 \times 10^{4}$
	Cubic Meters	0.02832
	Liters	28.32
Cubic inches	Cubic Centimeters	28,320.0
	Cubic Meters	1.639×10^{-5}
	Liters	0.01639
Feet	Centimeters	6.0
	Kilometers	3.048×10^{4}
	Meters	0.3048
	Millimeters	304.8
Foot pound	BTU	1.286×10^{-3}
	Kilowatt-hours	3.766×10^{-7}
Gallons	Cubic Centimeters	3,785.0
	Cubic Feet	0.1337
	Cubic Inches	231.0
	Cubic Meters	3.785×10^{-3}
	Liters	3.785
horsepower	BTU per min	42.44
	hp (metric)	1.014

Table A-1. Metric conversion chart

To Convert	Into	Multiply By
Inches	Centimeters	2.540
	Meters	2.540×10^{-2}
	Millimeters	25.40
Miles (statute)	Centimeters	1.6093×10^{5}
	Meters	1,609.3
	Kilometers	1.609.3
Miles/hr	cms/sec	44.70
	kms/hr	1.609
	kms/min	0.02682
Pounds	Kilograms	0.4536
Pounds/sq in (psi)	kgs/sq meter	703.1
Square Inches	sq centimeters	6.452
Square feet	sq cms	929.0
	sq meters	0.09290
	sq millimeters	9.290×10^{4}
Square miles	sq kms	2.590
	sq meters	2.590×10^{6}
Tons	Kilograms	907.1848
	Tons (metric)	.9078
Yards	Centimeters	91.44
	Kilometers	9.144×10^{-4}
	Meters	0.9144
	Millimeters	914.4

Temperature Conversion Chart: Celsius = 5/9 (°F - 32)

Fahrenheit = 9/5 (°C + 32)

Glossary

°F	degree Fahrehheit
AC	alternating current
ASA	American Standards Association
ATTN	attention
axial piston pump	A pump in which the pistons stroke in the same direction on the cylinder block's centerline; these pumps are either an in-line or angle design.
Bernoulli's Principle	Law which states that the static pressure of a moving liquid varies inversely with its velocity; that is, as velocity increases, static pressure decreases.
BTU	British thermal unit
capacity	Same as volumetric output.
cavitation	A condition that occurs in pumping when available fluid does not fill the existing space; cavitation causes erosion of the metal in the inlet and speeds deterioration of the hydraulic oil.
centrifugal pump	A nonpositive-displacement pump that is used in a hydraulic system where a large volume of flow is required at relatively low pressures; a centrifugal pump is either a volute or diffuser type.
cfs	cubic foot (feet) per second
chassis ground	The difference of potential between a point in the circuit and a ground point that is measured by the voltmeter. Also called **common ground**. *See also* **earth ground; ground; zero reference point**.

closed-center system A pump system where the pump continues to operate against a load in the neutral condition.

common ground Same as **chassis ground.**

cyl cylinder

cylinder A hydraulic actuator that is constructed of a piston or plunger which operates in a cylindrical housing by the action of liquid under pressure; a cylinder can be one of several types: single acting, double acting, differential, nondifferential, ram type, piston type, cushioned, or lockout.

DA Department of the Army

DC direct current

delivery rate Same as volumetric output.

directional-control valves Valves that control the flow direction; they can be a poppet, a sliding-spool, a check, a two-way, or a four-way valve. *See also* **flow-control valves, pressure-control valves; valves**.

displacement The amount of liquid that is transferred from the pump's inlet to its outlet in one revolution or cycle; displacement is either fixed or variable. See also fixed-displacement pump; variable-displacement pump.

displacement principle Principle which explains how fluid is taken in at one point and is displaced to another point; displacement is either nonpositive or positive. *See also* nonpositive-displacement pump; positive-displacement pump.

earth ground Connections to ground that are made for safety reasons. *See also* **chassis ground; ground; zero reference point**.

energy The ability to do work, expressed in ft lb. *See also* **friction; heat energy; kinetic energy; potential energy**.

fixed-displacement pump A pump in which the GPM output can be changed only by varying the drive speed. *See also* **displacement; variable-displacement pump**.

flow The movement of the hydraulic fluid caused by a difference in the pressure at two points; velocity and flow rate are the two ways to measure flow. *See also*

	flow rate; velocity.
flow rate	The measure of how much volume of a liquid passes a gpoint in a given time, measure in GPM. *See also* **flow; velocity**.
flow-control valves	Valves that are used to control the actuator speed by metering the flow; they can be a gate, a globe, a needle, a restrictor, an orifice-check, or a flow-equlizer valve. *See also* **directional-control valves; pressure-control valves; valves**.
FM	field manual
force	Anything that tends to produce or modify motion, expressed in pounds.
fps	foot (feet) per second
FPT	flow, pressure, and temperature
friction	The resistance to relative motion between two bodies. *See also* **energy; heat energy; kinetic energy; potential energy**.
ft	foot (feet)
ft lb	foot-pound
GPM	gallon(s) per minute
ground	A point of reference in an electrical circuit to which all circuit voltages are compared; circuit voltages are either positive or negative with respect to ground. *See also* **chassis ground; earth ground; zero reference point.**
head	The vertical distance between two levels in a fluid.
heat energy	The energy a body possesses because of its heat; considered a dynamic factor. *See also* **energy; friction kinetic energy; potential energy**.
hp	horsepower; standard unit of power; one HP is equal to 550 ft lb of work every second.
HP	hydraulic hp
HQ	headquarters
hydraulic actuator	A piece of equipment that receives pressure energy

	and converts it to mechnical force and motion.
hydraulic motors	A piece of equipment that converts hydraulic energy into mechanical energy; hydraulic motors can be gear, vane, or piston types.
hydraulic testers	lightweight units used to check or troubleshoot a hydraulic-powered system.
hydraulics	The science of transmitting force and/or motion through the medium of a confined liquid.
ID	inside diameter
JIC	Joint Industry Conference
kinetic energy	The energy a body possesses because of its motion; the amount of kinetic energy in a moving liquid is directly proportional to the square of its velocity; considered a dynamic factor. *See also* **friction; heat energy; potential energy; velocity pressure.**
laminar flow	Flow that occurs when particles of a liquid move in straight lines parallel to the flow direction. *See also* **turbulent flow**.
lb	pound
MO	Missouri
N C	normally closed
N O	normally open
nonpositive-displacement pump	This type of pump discharges liquid in a continuous flow. *See also* **displacement principle; positive-displacement pump**.
OD	outside diameter
open-center system	A pump system where the pump's output has a free flow path back to the reservoir in the circuit's neutral condition.
Pascal's Law	Basic law of hydraulics that Blaise Pascal formulated in the 17th century; Pascal states that pressure in a

	confined fluid is transmitted undiminished in every direction and acts with equal force on equal area and at right angles to the container's walls.
positive-displacement pump	This type of pump discharges volumes of liquid that are separated by periods of no discharge. *See also* **displacement principle; nonpositive-displacement pump.**
potential energy	Energy due to position; in hydraulics, potential energy is a static factor. *See also* **energy; friction; heat energy; kinetic energy**.
pressure	The force exerted against a specific area, expressed in psi.
pressure-control valves	Valves that may limit or regulate pressure, create a particular pressure condition required for control, or cause actuators to operate in a specific order. Pressure-control valves can be a relief, a pressure-reducing, a sequence, or a counterbalance valve. *See also* **directional-control valves; flow-control valves; valves**.
psi	pound(s) per square inch
radial piston pump	A pump in which the pistons are arranged like wheel spokes in a short cylindrical block.
reciprocating pump	A type of pump that depends on a reciprocating motion to transmit liquid from its inlet side to its outlet side.
resistance	A condition in a hydraulic system that is usually caused by a restriction or obstruction in the path or flow.
rotary pump	A positive-displacement pump in which rotary motion carries the liquid from the pump's inlet to its oulet.
rpm	revolution(s) per minute
slippage	The measure of a pump's efficiency expressed in percent; oil leaks from the pressure outlet to a low-pressure area or back to the inlet; some slippage is designed into pump systems for lubrication purposes.
SPDT	single pole-double throw switch
SPST	single pole-single throw switch
sq in	square inches

STOP system	Troubleshooting system in hydraulics in which a person should **S**tudy the cirucit diagrams, **T**est by using a reliable tester, **O**rganize the knowledge gained from the circuit-test results, and **P**erform repairs, taking time to do the job well.
torque	Circular force on an object.
turbulent flow	Flow that develops when flow speed increases beyond a given point. *See also* **laminar flow**.
two-stage pump	A pump that consists of two separate pump assemblies that are contained in one housing.
typical mobile circuits	Hydraulic-lift, power-steering, and road-patrol-truck circuits.
USAES	United States Army Engineer School
USASI	United States of American Standards Institute
valves	Objects in a hydraulic system that control the operation of the actuators; valves regulate pressure by creating special pressure conditions and by controlling how much oil will flow in portions of the circuit and where it will go. *See also* **directional-control valves; flow-control valves; pressure-control valves.**
vane-type pump	A pump in which a slotted rotor splined to a drive shaft rotates between closely fitted side plates that are inside of an elliptical- or circular-shaped ring; vane pumps can be couble, unbalanced, or balanced.
variable-displacement pump	A pump in which the pumping-chamber sizes can be changed; the GPM delivery can be changed by moving the displacement control, changing the drive speed, or doing both. *See also* **displacement; fixed-displacement pump**.
velocity	The average speed of a fluid's particles past a given point, measured in fps. *See also* **flow; flow rate**.
velocity pressure	Pressure caused by kinetic energy. *See also* **kinetic energy**.
volumetric output	The amount of liquid a pump can deliver at its outlet port per unit of time at a given drive speed, usually expressed in GPM or cubic inches per minute. Also called **delivery rate** or **capacity**.

V	volt
VOM	volt-ohm-millammeter
work	The measure of force multiplied by distance.
zero reference point	voltage point in an electrical circuit that is neither negative or positive. *See also* **chassis ground, earth ground; ground**.

References

SOURCES USED

These are the sources quoted or paraphrased in this publication.

Nonmilitary Publications

Hydraulics. Deere and Company Service Publications, Moline, Illinois. 1997.

Industrial Hyydraulics Manual. Vickers Training Center, Rochester Hills, Michigan. 1993.

DOCUMENTS NEEDED

These documents must be available to the users of this publication;

Department of the Army Forms

DA Form 2028. *Recommended Changes to Publications and Blank Forms*. February 1974.

Index

A

accumulators (para 2-6)
    bag-type (para 2-6b)
    maintenance of (para 2-6d)
    piston-type (para 2-6c)
    spring-loaded (para2-6a)
actuator
air vents (para 4-3j)
American Standards Association (ASA) (para 6-2)
area (para 1-1b)
ASA. *See* American Standards Association (ASA)
assembling a clamp-type coupling (para 2-10d)
assembling a conductor (para 2-10d)

B

baffle plate (para 2-3f)
bends in tubing (para 2-9d)
Bernouilli's principle (para 1-4d)

C

camshaft (para 5-2d(1))
capacity (para 3-2)
centrifugal force (para 4-4b)
cfs. *See* cubic foot (feet) per second (cfs)
circuits
    hydraulic-lift (para 6-3a)
    mobile (para 6-3a)
    operation problems in (para 6-4a)
    power-steering (para 6-3b)
    road-patrol-truck (para 6-3c)
    testing (para 6-4b)
    troubleshooting (para 6-4)
circulatory system (para 2-9)
    requirements (para 2-9)
colors in figures (para 2-2)
connecting tubing (para 2-9d)
connectors (para 2-10)
    flared (para 2-10b)
    threaded (para 2-10a)
couplings (para 2-3f)
    flexible-hose (para 2-10c)

cubic foot (feet) per second (cfs) (para 2-7)
cylinder block (para 3-8a(2)), (para 3-8a(5))
cylinder housing (para 4-1)
cylinder ports (para 4-2)
cylinders (para 4-1)
    construction of (para 4-2)
    cushioned (para 4-1g)
    differential (para 4-1c)
    double-acting (4-1b)
    lockout (para 4-1h)
    nondifferential (para 4-1d)
    piston (para 4-1)
    piston-type (para 4-1f)
    problems with, abrasives on a piston rod (para 4-3h)
    problems with, burrs on a piston rod (para 4-3i)
    problems with, creeping (para 4-3c)
    problems with, loose mounting (para 4-3e)
    problems with, misalignment (para 4-3f)
    problems with, no lubrication (para 4-3g)
    problems with, sluggish operation (para 4-3d)
    ram-type (para 4-1), (para 4-1e)
    single-acting (para 4-1a)

D

dash number of tubing (para 2-9a)
delivery rate (para 3-2)
diagrams
    hydraulic-circuit (para 6-1)
    hydraulic-circuit, block (para 6-1a)
    hydraulic-circuit, cutaway (para 6-1b)
diode (para 7-2b(5))
displacement (para 3-3), (para 4-4), (para 4-4c(1))
distance (para 1-2)
drive shaft (para 3-8b(1))

E

electrical equipment (para 7-4a)
    practices (para 7-4b)
    safety (para 7-4)
energy (para 1-4)
    heat (para 1-4c)
    kinetic (para 1-4b), (para 1-4d)
    potential (para 1-4a), (para 1-4d

F

filters (para 2-4b)

active, absorbent (para 2-5)
element, depth-type (para 2-5)
element, edge-type (para 2-5)
element, surface-type (para 2-5)
full-flow (para 2-4b(1))
inactive, absorbent (para 2-5)
mechanical (para 2-5)
proportional-flow (para 2-4b(2))
fittings (para 2-10)
crosses (para 2-10b)
elbows (para 2-10b)
skived (para 2-10d)
unions (para 2-10b)
flared connectors leaking (para 2-10b)
flaring a tube (para 2-9d)
flow (para 1-3), (para 2-7), (para 3-1), (para 5-2c(2)), (para 5-2e)
laminar (para 1-4c)
turbulent (para 1-4c)
flow, pressure, and temperature (FPT) (para 6-4d)
fluid pressure (para 4-1f)
foot (feet) per second (fps) (para 1-3a)
foot-pound (ft lb) (para 1-4)
force (para 1-1b), (para 1-2)
fps. *See* foot (feet) per second (fps)
FPT. *See* flow, pressure, and temperature (FPT)
friction (para 1-4c), (para 1-4d)
ft lb. *See* foot-pound (ft lb)

G

gallon(s) per minute (GPM) (para 1-3b)
gas (para 1-1)
gauges
pressure (para 2-7)
GPM. *See* gallon(s) per minute (GPM)
gravity (para 4-1f)
ground (para 7-3)
chassis or common (para 7-3b)
earth (para 7-3a)
zero reference point (para 7-3c)

H

head (para 1-1a), (para 1-4c)
horsepower (HP) (para 1-4f), (para 2-1c(3))
hose (para 2-9c(1))
rubber (para 2-9c(1))
Teflon-type (para 2-9c(2))

HP. *See* horsepower (HP)
hydraulic balance (para 5-1)
hydraulic boost (para 6-3b)
hydraulic motors (para 4-4)
    bent-axis piston-type (para 4-4c(2))
    gear-type (para 4-4a)
    in-line-axis piston-type (para 4-4c(1))
    piston-type (para 4-4c)
    principal ratings of (para 4-4)
    vane-type (para 4-4b)
    variable-displacement (para 4-4c(2))
hydraulic pump essentials (para 3-5)
hydraulic systems (para 2-1)
    closed-center (para 2-1d), (para 2-1d), (para 2-1d)
    hydraulic-jack (para 2-1a)
    improperly operating (para 2-8b)
    motor-reversing (para 2-1b)
    open-center (para 2-1c)
    problems with (para 6-4f)
    solutions for (para 6-4g)
    with fixed-displacement pump and accumulator (para 2-1d(1))
    with flow divider (para 2-1c(3))
    with series connection (para 2-1c(1))
    with series/parallel connection (para 2-1c(2))
    with variable-displacement pump (para 2-1c(2))
hydraulic transmission (para 4-4c(2))

I

ID. *See* inside diameter (ID)
inside diameter (ID) (para 2-9b)

J

JIC. *See* Joint Industry Conference (JIC)
Joint Industry Conference (JIC) (para 6-2)

L

leakage
    external (para 2-11b), (para 4-3a)
    in a hydraulic system (para 2-11)
    internal (para 2-11a), (para 4-3b)
    prevention of (para 2-11c)
    prevention of by properly operating equipment (para 2-11c(2))
    prevention of through maintenance of equipment (para 2-11c(3))
    prevention of through proper installation of materials (para 2-11c(1))
lines in liquid-powered systems (para 2-9)
    flexible hosing (para 2-9c)

piping (para 2-9b)
tubing (para 2-9a)
liquid (para 1-1a), (para 1-4c)
levels (para 1-1a(1))

M

metering (para 5-3)
meters (para 2-7b)
nutating-piston-disc type (para 2-7b)

O

OD. *See* outside diameter (OD)
O-ring (para 5-2a), (para 5-2e(1)), (para 5-23(2))
O-rings (para 2-12b(1))
outside diameter (OD) (para 2-9a)
override (para 5-1)

P

packing (para 2-12c)
Pascal's law (para 1-2)
pilot-valve assembly (para 5-1b(1))
pintle (para 3-8a(1))
pistons (para 3-8a(3))
Pitman arm (para 6-3b)
pivots (para 4-3)
port connections (para 6-2c)
potentiometer (para 7-2b(1))
pound(s) per square inch (psi) (para 1-1), (para 1-1a(2))
power (para 1-4f)
power-steering system (para 6-3b)
pressure (para 1-1), (para 1-1a), (para 2-7), (para 3-2), (para 4-4b), (para 5-1b), (para 5-1b(1))
atmospheric (para 1-1a), (para 1-1a(2)), (para 2-7a)
static (para 1-4c), (para 1-4d)
pressure plate (para 4-4b)
pressure switches (para 5-1e)
psi. (Emphasis>See pound(s) per square inch (psi)
psi. *See* pound(s) per square inch (psi)
pump
volute (para 3-5a)
pump cavitation (para 2-3d)
pumps
centrifugal (para 3-5a)
characteristics of (para 3-1c)
characteristics of vane-type (para 3-7a)
charging (para 2-1d(2))
design (para 3-5)

diffuser (para 3-5a(2))
displacement (para 3-8b(1)(a))
external gear (para 3-6a)
fixed-displacement (para 3-3a)
in-lin, operation of (para 3-8b(1)(c))
in-line, components of (para 3-8b(1)(b))
in-line, wobble-plate type (para 3-8b(2))
internal gear (para 3-6b)
lobe (para 3-6c)
nonpositive-displacement (para 3-1a)
operating problems, cavitation (para 3-9c)
operating problems, excess speed (para 3-9b)
operating problems, no delivery (para 3-9d(3))
operating problems, noise (para 3-9d(4))
operating problems, overloading (para 3-9)
operating problems, pressure loss (para 3-9d(1))
operating problems, slow operation (para 3-9d(2))
piston (para 3-8)
piston, axial-type (para 3-8b)
piston, bent-axis type (para 3-8b(3))
piston, in-line-type (para 3-8b(1))
piston, radial-type (para 3-8a)
positive-displacement (para 3-1b)
reciprocating (para 3-5c)
two-stage design (para 3-7e)
types of (para 3-a)
vane (para 3-7)
vane-type, balanced design (para 3-7c)
vane-type, double design (para 3-7d)
vane-type, unbalanced design (para 3-7b)
variable-displacement (para 3-3b)

R

relay (para 7-2b(3))
replacing hose (para 2-10c)
reservoir (para 2-3), (para 6-2a)
construction of (para 2-3a)
location of (para 2-3d)
shape of (para 2-3b)
size of (para 2-3c)
ventilation and pressurization of (para 2-3e)
reservoirs
line connections for (para 2-3f)
maintenance of (para 2-3g)
resistance (para 3-2), (para 5-1c)
revolution(s) per minute (rpm) (para 2-1d(2))

rings
backup (para 2-12b(2))
piston (para 2-12b(7))
rotors (para 3-8a(4))
rpm. *See* revolution(s) per minute (rpm)

S

seals (para 2-12), (para 4-2), (para 4-3)
cup (para 2-12b(6))
dynamic (para 2-12b)
face (para 2-12b(8))
lathe-cut (para 2-12b(3))
leather (para 2-12d(1))
lip (para 2-12b(5))
materials (para 2-12d)
neoprene (para 2-12d(4))
nitrile (para 2-12d(2))
nylon (para 2-12d(5))
silicone (para 2-12d(3))
static (para 2-12a)
T-ring (para 2-12b(4))
seizing in connectors (para 2-10a)
sleeve (para 2-10b)
slippage (para 3-2)
solenoid coil (para 7-2b(2))
spring tester (para 5-5b)
strainer (para 2-4a)
swash plate (para 3-8b(1)), (para 3-8b(1)(a)), (para 4-4c(1))
symbols
accumulator (para 6-2i)
cooler (para 6-2i)
cylinder (para 6-2e)
cylinder, cushioned (para 6-2e)
cylinder, double-acting (para 6-2e)
cylinder, double-end rod (para 6-2e)
cylinder, single-acting (para 6-2e)
drain line (para 6-2b)
flexible line (para 6-2b)
fluid conditioner (para 6-2i)
graphical, United States of American Standards Institute (USASI) (para 6-2)
hydraulic lines (para 6-2b)
motor (para 6-2d)
pilot line (para 6-2b)
pump (para 6-2c)
reservoir (para 6-2a)
valves, check (para 6-2f(3))

valves, counterbalance (para 6-2f(4)
valves, directional-control (para 6-2h)
valves, flow-control (para 6-2g)
valves, four-way (para 6-2h(2))
valves, mobile directional (para 6-2h(3)
valves, pressure-control (para 6-2f)
valves, pressure-reducing (para 6-2f(5))
valves, relief (para 6-2f(1))
valves, sequence (para 6-2f(2))
valves, unloading (para 6-2h(1))
working line (para 6-2b)

T

testers
hydraulic-circuit (para 2-8a)
testing devices for electical circuits. *See* potentiometer, solenoid coil, relay, transformer, diode
torque (para 4-4b), (para 4-4c(2))
transformer (para 7-2b(4))
troubleshooting procedures for electrical circuits (para 7-2a)
analyze the symptom (para 7-2a(2))
identify the symptom (para 7-2a(1))
isolate the faulty circuit (para 7-2a(4))
isolate the single faulty function (para 7-2a(3))
locate/verify the cause of the malfunction (para 7-2a(5))
tube installation (para 2-9d)
tube maintenance (para 2-9d)

U

USASI. *See* symbols
graphical, United States of American Standards Institute (USASI)

V

valves (para 2-1a)
assembly of (para 5-6)
check (para 5-2c)
check, elements of (para 5-2c)
check, orifice (para 5-3e)
check, pilot-operated (para 5-2c(3))
check, pilot-operated-type (para 5-2c(3))
check, restriction-type (para 5-2c(2))
check, standard-type (para 5-2c(1))
closed-center spool (para 5-2e(2))
compensated flow for (para 5-4d)
compound-relief-type (para 5-1a(2))
control (para 2-1c(1)), (para 2-1d), (para 2-1d(1))
counterbalance (para 5-1d)

directional-control (para 4-4c(2)), (para 5-2), (para 5-5c(1))
directional-control, creep or drift problem (para 5-7b)
directional-control, four-way (para 5-2e)
directional-control, four-way poppet-type (para 5-2e(1))
directional-control, four-way sliding-spool (para 5-2e(2))
directional-control, load-drop problem (para 5-7b)
directional-control, oil problem (para 5-7b)
directional-control, shifting problem (para 5-7b)
disassembling (para 5-5b)
dividing (para 3-7e)
failures (para 5-5)
flow equalizer (para 5-3f)
flow-control (para 5-3)
flow-control, bleed-off-circuit installation (para 5-4c)
flow-control, installation of (para 5-4)
flow-control, meter-in-circuit installation (para 5-4a)
flow-control, meter-out-circuit installation (para 5-4b)
gate (para 5-3a), (para 5-3b)
globe (para 5-3b)
inlet (para 3-5b)
manually operated four-way (para 5-2e(3))
needle (para 5-3b)
open-center spool (para 5-2e(2))
outlet (para 3-5c)
oxidation of (para 5-5)
pilot-operated four-way (para 5-2e(4))
poppet (para 5-2a)
poppet-type (para 5-2)
poppet-type four-way Para 5-2e(1))
pressure-control (para 2-3e), (para 5-1), (para 5-5c(3))
pressure-control, troubleshooting of (para 5-7a)
pressure-reducing (para 5-1b)
pressure-reducing, pressure problem (para 5-7a(2))
pressure-regulating (para 2-1d(2))
pressure-sequence, function problem (para 5-7a(3))
pressure-sequence, movement problem (para 5-7a(3))
pressure-sequence, secondary operation problem (para 5-7a(3))
relief (para 3-7d), (para 5-1a)
relief, adjustment and pressure problem (para 5-7a(1))
relief, bypass (para 2-4b(1))
relief, noise or chatter problem (para 5-7a(1))
relief, nonadjustable cartridge-type (para 5-5c(5))
relief, overheating problem (para 5-7a(1))
relief, pressure problem (para 5-7a(1))
relief, troubleshooting of (para 5-7a(1))
relief-type,internal design of (para 5-1a)

repairing (para 5-5c)
restrictor (para 5-3d)
rotary-spool-type (para 5-2)
seats and poppets (para 5-5c(4))
sequence (para 5-1c)
sequence, application of (para 5-1c)
servicing (para 5-5a)
simple-relief-type (para5-1a(1))
sliding-spool (para 5-2b)
sliding-spool-type (para 5-2)
solenoid-operated two-and four-way (para 5-2e(5))
troubleshooting of (para 5-7)
two-way (para 5-2d)
unloading-type, unloading problem (para 5-7a(4))
variations of flow-control (para 5-3)
volume-control (para 5-5c(2))
volume-control, flow-variation problem (para 5-7c)
volume-control, improper-flow problem (para 5-7c)
volume-control, oil-heating problem (para 5-7c)
volume-control, pressure problem (para 5-7c)
XC-series pressure-reducing (para 5-1b(2))
X-series pressure-reducing (para 5-1b(1))
velocity (para 1-3a), (para 1-4d)
venturi throat (para 2-4b(2))
volumetric output (para 3-2)

W

weight para 1-1a)
water (para 1-1a)
wipers (para 4-2)
work (para 1-4e)
working parts of a pump (para 3-8a)

Y

yoke (para3-8b(1)(c))

FM 5-499
1 AUGUST 1997

By Order of the Secretary of the Army:

DENNIS J. REIMER
General, United States Army
Chief of Staff

Official:

JOEL B. HUDSON
Administrative Assistant to the
Secretary of the Army
03710

DISTRIBUTION:

Active Army, Army National Guard, and U. S. Army Reserve: To be distributed in accordance with initial distribution number 115487, requirements for FM 5-499.