FM 5-436

Paving and Surfacing Operations

Headquarters,
Department of the Army

DISTRIBUTION RESTRICTION: Approved for public release; distribution is unlimited.

Field Manual
No. 5-436

Headquarters
Department of the Army
Washington, DC, 28 April 2000

Paving and Surfacing Operations

Contents

Page

PREFACE x

INTRODUCTION xi
Construction Principles xi
Stage Construction xi
Safe Construction xi
Types of Pavements and Surfaces xii

PART ONE BITUMINOUS PAVEMENTS AND SURFACES

Chapter 1 BITUMINOUS MATERIALS 1-1
Section I - Bitumen 1-2
Types of Bitumen 1-2
Asphalt 1-2
Tar 1-2
Asphalt Cement 1-2
Asphalt Cutback 1-3
Asphalt Emulsion 1-3
Tar 1-4
Section II - Aggregate 1-5
Function 1-5
Types of Aggregate 1-5
Characteristics 1-6

Distribution Restriction: Approved for public release; distribution is unlimited.

---

*This publication supersedes Technical Manuals (TMs) 5-331D, 21 April 1969; 5-337, 21 February 1966; and 5-337-1, 29 March 1971.

Page

Chapter 2 **BITUMINOUS DESIGN** 2-1

Bitumen Selection 2-1
Asphalt Cement 2-1
Asphalt Cutback 2-1
Asphalt Emulsion 2-5
Tar 2-5
Aggregate Selection 2-5
Mix Gradation 2-5
Aggregate Blending 2-10
Example of Aggregate Blending 2-15
Reporting 2-18
Optimum Bitumen Content 2-18
Reporting Test Results 2-18
Evaluating Test Results 2-21
Job-Mix Formula 2-22

Chapter 3 **EQUIPMENT USED IN BITUMINOUS OPERATIONS** 3-1

Section I - Production Equipment 3-1

Asphalt Plant 3-1
Batch and Continuous-Mix Plants 3-1
Cold-Feed Calibration 3-2
Dryer 3-3
Dust Collector 3-3
Screening 3-3
Percentage of Each Hot Bin 3-3
Mixing Aggregate and Asphalt 3-4
Drum Mixer 3-4
Cold-Feed Calibration 3-5
Dryer 3-5
Storage Silo 3-5
Travel Plant 3-5
Liquid Handling Equipment 3-5
Hauling Equipment 3-6
Support Equipment 3-6

Section II - Placement Equipment 3-6

Truck-Mounted Asphalt Distributor 3-6
Trailer-Mounted (Tankless) Asphalt Distributor 3-8
Asphalt Finisher 3-8
Compactors 3-10
Static Steel-Wheel Rollers 3-10
Vibratory Steel-Wheel Rollers 3-11
Rubber-Tired Rollers 3-11
Other Compaction Devices 3-12
Motor Grader 3-12
Hand Tools 3-12
Aggregate Spreaders 3-14
Surface-Treatment Combine 3-15

Page

Chapter 4 **PRODUCTION AND LAYDOWN OF BITUMINOUS MATERIALS** 4-1

Section I - Fundamentals 4-1

Construction 4-1
Handling and Stockpiling Aggregate 4-2
Traffic Problems 4-2

Section II - Prime and Tack Coats 4-3

Prime Coat 4-3
Base Preparation 4-3
Materials 4-3
Application 4-4
Curing Period 4-5
Protection 4-5
Tack Coat 4-5
Materials 4-5
Application 4-5
Curing Period 4-6
Protection 4-6

Section III - Surface Treatment 4-6

Single Surface Treatment 4-6
Aggregate 4-7
Bituminous Material 4-8
Rolling 4-9
Final Sweeping 4-9
Multiple Surface Treatment 4-9
Dust Palliative 4-10

Section IV - Penetration Macadam 4-10

Concept 4-10
Materials 4-11
Construction 4-11
Recondition the Base Course 4-13
Construct Edges on the Wearing Surface 4-13
Apply the Macadam Aggregate 4-13
Test the Course-Aggregate Thickness 4-14
Apply the First Layer of Bituminous Material 4-14
Protect the Area 4-15
Apply the Keystone 4-15
Broom and Roll the Aggregate 4-15
Apply the Second Layer of Bituminous Material 4-15
Apply the Choke Stone 4-15
Apply the Surface Treatment 4-16
Protect and Maintain the Pavement 4-16

Section V - Road-Mix Pavement 4-16

Concept 4-16
Bitumen 4-16
Aggregate 4-17
Mix Proportions 4-17
Construction 4-18

Page

Prepare the Base 4-19
Place and Windrow the Aggregate 4-19
Mix the Materials 4-20
Blade Thickened Edges 4-21
Spread and Shape the Mix 4-21
Roll the Finished Surface 4-22
Shape the Edges 4-22
Take Samples 4-22
Treat the Surface 4-22

Section VI - Plant-Mix Pavement 4-22

Concept 4-22
Hot-Mix Bituminous Concrete 4-23
Cold-Laid Bituminous Plant Mix 4-25
Bituminous Materials 4-26
Laying a Hot M i x 4-26
Determining the Placement Temperature 4-27
Inspecting and Rejecting the Mix 4-27
Placing and Spreading the Mix 4-28
Computing the Depth 4-29
Adjusting the Screed 4-30
Raking the Mix 4-31
Adjusting the Mix 4-31
Rolling the Pavement 4-31
Density Tests 4-33
Selecting and Marking Samples 4-34
Removing Samples 4-35
Identifying Samples 4-35
Correcting Low Density 4-35
Longitudinal Joints 4-36
Construction 4-36
Alignment 4-38
Transverse Joints 4-38
Terminating a Lane 4-38
Rolling a Transverse Joint 4-39
Constructing Pavement Ends 4-39

Section VII - Special Mixes 4-40

Sand Asphalt and Tar 4-40
Sheet Asphalt 4-40
Stone-Filled Sheet Asphalt 4-40
Rock Asphalt 4-41

Chapter 5 FIELD MANUFACTURE OF ASPHALT CUTBACKS 5-1

Equipment and Production Rate 5-1
Safety 5-2
Procedures 5-3
Drums 5-4
Asphalt Cement 5-5
Temperature 5-5

Page

Material Requirements 5-5

Chapter 6 MATERIAL ESTIMATES 6-1

Prime Coat 6-1
Tack Coat 6-2
Surface Treatment 6-2
Penetration Macadam 6-3
Road Mix 6-5
Plant Mix 6-5
Mileage Requirements 6-6

Chapter 7 MAINTAINING AND REPAIRING BITUMINOUS WEARING SURFACES 7-1

Principles 7-1
Materials 7-1
Inspections 7-2
Causes of Failure 7-2
Types of Failure 7-3
Potholes 7-3
Raveling 7-4
Cracking 7-4
Rutting and Shoving 7-4
Corrugation 7-4
Burned Areas 7-5
Bleeding 7-5
Settlements and Depressions 7-5
Patches 7-5
Premixed Patch 7-5
Penetration Patch 7-9
Skin Patch 7-10
Seal Coat 7-10
Craters 7-11

PART TWO CONCRETE PAVEMENTS

Chapter 8 COMPONENTS OF CONCRETE 8-2

Types of Portland Cement 8-2
Water 8-3
Sea Water 8-3
Well Water (Sulfur) 8-3
Aggregate 8-3
Types 8-4
Characteristics 8-4
Gradations 8-4
Fineness Modulus 8-5
Blending 8-5
Admixtures 8-5
Air-Entraining Agents 8-6

Page

Accelerators 8-6
Retardants 8-6
Plasticizers 8-6
Materials Handling and Storage 8-7
Aggregate 8-7
Cement 8-7

Chapter 9 **CHARACTERISTICS OF CONCRETE** 9-1
Plastic Concrete 9-1
Hardened Concrete 9-1
Air-Entrained Concrete 9-2
Production 9-2
Measurement of Air Content 9-3
Slump 9-3
Strength 9-3

Chapter 10 **MIX DESIGN** 10-1
Criteria 10-1
Water-to-Cement Ratio 10-1
Aggregate 10-3
Workability 10-3
Methods 10-3
Book Method 10-4
Trial-Batch Method 10-7

Chapter 11 **CONCRETE EQUIPMENT** 11-1
Concrete Mixer 11-1
Pneumatic Concrete Vibrator 11-1
Concrete Saw 11-2
Pin Puller 11-2
Water Heater 11-2
Concrete Bucket 11-2
Supporting Equipment 11-2
Central Mix Plant 11-3
M919 Concrete Mobile 11-3

Chapter 12 **FORMS AND JOINTS** 12-1
Section I - Forms 12-1
Procedures 12-2
Construction 12-2
Placement and Alignment 12-2
Handling 12-3
Section II - Joints 12-4
Types of Joints 12-4
Construction 12-4
Expansion 12-4
Contraction 12-5

Page

Dowels 12-5
Installation of Joints 12-6
Longitudinal Construction Joints 12-7
Transverse Construction Joints 12-7
Expansion Joints 12-7
Concrete Placement 12-7
Final Positions 12-8
Joint Surfaces 12-8
Contraction Joints 12-8
Hand-Formed Joints 12-8
Sawed Joints 12-9
Sealing Joints 12-9

Chapter 13 CONCRETE PAVING 13-1

Section I - Material Measurements and Truck Requirements 13-1

Cement 13-1
Water 13-1
Aggregate 13-2
Weight Measurement 13-2
Volume Measurement 13-2
Truck Requirements 13-2

Section II - Procedures 13-3

Sequence of Operations 13-3
Prepare the Subgrade 13-3
Mix the Concrete 13-4
Transport the Concrete 13-5
Prepare Expansion Joints 13-6
Place the Concrete 13-6
Vibrate the Concrete 13-6
Finish the Surface 13-7
Spreading 13-7
Hand Finishing and Floating 13-8
Straightedge Finishing 13-8
Burlap Drag Finishing 13-8
Prepare Contraction Joints 13-9
Finish the Edges 13-9
Cure the Concrete 13-9
Burlap or Cotton Mat 13-9
Waterproof-Paper Blanket or Impermeable Sheet 13-10
Membrane 13-10
Seal Joints and Cracks 13-11
Remove Forms 13-11
Test the Surface 13-11
Test the Strength 13-11

Section III - Cold- and Hot-Weather Techniques 13-11

Cold-Weather Construction 13-11
Frozen Subgrade 13-12
Effect of Temperature 13-13

Page

Heating Equipment 13-16
Heat Preservation 13-16
Placing and Finishing 13-16
Protection After Finishing 13-16
Hot-Weather Construction 13-17

Section IV - Reinforced and Prestressed Concrete 13-18

Reinforced Concrete 13-18
Prestressed Concrete 13-20

Section V - Maintenance and Repair 13-21

Introduction 13-21
Types of Cement 13-21
Repair of Joints and Cracks 13-21
Repair of Areas 13-22
Repair of Breaks 13-23
Concrete Patches 13-23
Cement-Bound Macadam Patches 13-24
Bituminous Patches 13-24
Emergency Patches 13-24
Settlements 13-24

PART THREE EXPEDIENT OPERATIONS

Chapter 14 EXPEDIENT PAVEMENTS AND SURFACES 14-1

Materials 14-2
Special Considerations 14-2
Roads 14-3
Cross-Country Tracks 14-3
Army Tracks 14-3
Chespaling Mats 14-4
Bamboo Mats 14-4
Sommerfeld Track 14-6
Construction 14-7
Sommerfeld Sandwich 14-7
Monkton Pack 14-7
Wire Mesh 14-7
Chain-Link Wire Mesh 14-9
Chicken Wire and Expanded Metal Lath 14-9
Heavy Expedient Roads and Pioneer Trails 14-9
Mat Roads 14-10
Plank Roads 14-11
Plank-Tread Roads 14-12
Log-Tread and Log-Plank Roads 14-12
Corduroy Roads 14-12
Pioneer Roads 14-16
Mat Repair 14-17
Surface Repair With Brick 14-17

Page

Appendix A **METRIC CONVERSIONS** A-1

Appendix B **CHECKLIST FOR CONCRETE PAVING** B-1

GLOSSARY Glossary-1

BIBLIOGRAPHY Bibliography-1

INDEX Index-1

Preface

Field Manual (FM) 5-436 provides essential information to military personnel who are engaged in or responsible for bituminous and concrete operations for roads and airfields. It contains information on construction materials and equipment and the mix design, production, placement, and repair of concrete and bituminous pavements.

Emphasis is primarily placed on the duties and responsibilities of engineer platoon sergeants, platoon leaders, company commanders, and staff personnel during bituminous and concrete operations. In addition, technical engineering specialists (military occupational specialty [MOS] 51T) are involved in quality control of bituminous and concrete operations.

FM 5-436 is a companion publication of FMs 5-410, 5-430-00-1, and 5-430-00-2. It completes the process of road and airfield construction.

Appendix A contains a metric conversion chart.

The proponent of this publication is HQ TRADOC. Forward comments and recommendations on Department of the Army (DA) Form 2028 to Commandant, United States Army Engineer School, ATTN: ATSE-TD-D, Fort Leonard Wood, Missouri 65473-6650.

Unless this publication states otherwise, masculine nouns and pronouns do not refer exclusively to men.

Introduction

CONSTRUCTION PRINCIPLES

The advent of devastating weapons and the increased mobility of modern warfare make it possible for combat sites to be located anywhere. Constructing roads and airfields must proceed even against tremendous difficulties. The durability of construction and other standards may require the modification of plans based on

- The immediate tactical or strategic situation.
- Urgent factors.
- The availability of manpower, materials, and equipment.
- Continuous enemy attack.

Understanding construction principles helps engineers attain the best construction possible using the materials available. Construction principles include making a sound plan for the route, clearing the right-of-way, evening out the roadbed, and making improvements to the surface.

STAGE CONSTRUCTION

Stage construction is the planned expansion (width or depth) of a road. Roads can be expanded (upgraded) using a minimum amount of time, manpower, and materials. Stage construction in depth is a vital consideration when planning combat-zone (CZ) roads. Flexible pavements lend themselves to this task. For example, an unsurfaced road was originally constructed in a CZ. As the combat area moves forward, surfacing the road with road-mix pavement increases the traffic capacity. When the road is part of the rear area, engineers pave it with a hot or cold plant mix if increased durability is necessary or they treat the surface if increased surface smoothness is needed. The road could then handle the high volume and heavy loads of rear-area traffic, assuming the base and subbase are adequate. Engineers must ensure that all layers are completely bonded.

As the load or amount of traffic increases, the road may need to be widened. During the planning stage of an original road construction, engineers should include widening allowances. For example, they plan for wide cuts and fills to allow for later road widening. (Most military widening operations are less than one lane width.)

SAFE CONSTRUCTION

Engineers must rigidly observe safety precautions and procedures during paving operations and when heating bitumens, especially if flammable materials are being used. They must also observe proper traffic maintenance procedures.

TYPES OF PAVEMENTS AND SURFACES

This manual addresses the following types of paving and surfacing operations:

- Bituminous pavements and surfaces (Part One).
- Concrete pavements (Part Two).
- Expedient operations (Part Three).

NOTE: The term *concrete* in this publication refers to portland-cement concrete unless specified otherwise.

Selecting the types of pavements and surfaces to construct is based on traffic conditions; the availability of equipment, manpower, and materials; time allotted; climatic and weather conditions; and expected subgrade deformations. Engineers are not limited to using the expedient methods discussed in this manual. Sound engineering principles and imagination often lead to improved expedient methods.

A pavement is the end result of an operation that contributes to the overall load-bearing capacity of a structure:

- Bituminous pavement is usually more than 1 inch thick, and concrete pavement is usually more than 6 inches thick.
- Flexible pavement gives or flexes under loads. Ideally, the load is distributed over a surface area that is proportional to the distance of the area from the surface.
- Rigid pavement, such as concrete, deflects slightly under a load and distributes it over a large area while bridging small weak spots in the base.

A surface retains and waterproofs a load-bearing course. Bituminous surface treatments and membranes are usually less than 1 inch thick and do not contribute to the load-bearing capacity of a base.

PART ONE

Bituminous Pavements and Surfaces

Bituminous pavements and surfaces are composed of compacted aggregate and bitumen. The aggregate transmits the load from the surface to the base, takes the abrasive wear of traffic, and provides a nonskid surface. The bitumen (bituminous binder) holds the aggregate together, prevents the displacement and loss of aggregate, and provides a waterproof cover for the base.

Bituminous surfaces—

- Are particularly adaptable to stage construction because engineers can add courses to existing pavement for reinforcement if the load or the amount of traffic increases.
- Are flexible, allowing for slight adjustments due to subgrade settlement without detrimental effects.
- Provide a resilient, waterproof medium that protects the base from water and traffic.
- Are less affected by temperature changes than concrete.
- Resist wear, weathering, and deterioration.
- Are highly versatile and meet temporary, expedient, and light traffic requirements where concrete is unjustifiable.
- Lack measurable beam action to carry loads over weak spots in the subbase. (The subbase must have an adequate, uniform bearing strength; and the base must have adequate thickness, bearing capacity, and cohesion.)

Bituminous pavements are comparable to concrete pavements and are designed to carry heavy traffic volume and heavy loads on highways, roads, streets, and airfields.

Chapter 1

Bituminous Materials

Asphalt pavements are composed of asphalt and aggregate. Asphalt-concrete pavement is the highest quality asphalt pavement. It consists of well-graded aggregate and asphalt cement (AC) that are heated and blended together in exact proportions at a hot-mix plant.

SECTION I - BITUMEN

TYPES OF BITUMEN

1-1. Asphalt and tar bitumens are used in road and airfield construction. (See *FM 5-472* for field identification of tar and asphalt paving compounds.)

ASPHALT

1-2. Asphalt is a natural or man-made by-product of petroleum distillation. Natural asphalt is found in nature, either as lake (pit) or rock asphalt:

- **Lake asphalt.** It is formed when crude oil seeps to the surface of the earth and lighter fractions (volatile materials) are driven off by the action of sun and wind. Large deposits of lake asphalt exist in Trinidad and Venezuela.
- **Rock asphalt.** It occurs in more than one form. It may be asphalt that is impregnated in porous rocks, or it may be asphalt that is hardened into rock-like forms.

1-3. Manufactured asphalt is more uniform in quality than natural asphalt. AC is the residue (waste product) of crude-oil distillation. It is used alone or in combination with other materials to form asphalt cutbacks and emulsions. All three bituminous compounds (lake, rock, and manufactured) are referred to as asphalt. Use natural asphalt when it is locally available; otherwise, use manufactured asphalt.

TAR

1-4. Tar is extracted from coal. Coal-gas tar is a by-product of coke production, and water-gas tar is distilled from tar vapors. Both are produced, condensed, and collected during the production of illuminating gas and are used in paving tar. Water-gas tar combines with coal-gas tar as a flux. The two types of paving tar are road tar (RT) and road-tar cutback (RTCB).

ASPHALT CEMENT

1-5. AC consistency varies in relation to the amount of volatile substances in the residue. The penetration (hardness) test measures the distance in units of 1/100 centimeter that a standard blunt needle of a penetrometer, under a force of 100 grams, will penetrate an AC sample at 77°F in 5 seconds. (See *FM 5-472* for more details on the penetration test.)

1-6. There are nine paving grades of AC. Each grade is designated by a penetration-grade number, an asphalt-petroleum (AP) number, and a relative-consistency (hardness) indicator (hard, medium, or soft). (See *Table 1-1*.)

Table 1-1. Paving Grades of AC

Penetration Grade	AP	Relative Consistency
40-50	7	Hard
50-60*	6	Hard
60-70	5	Hard
70-80*	4	Hard
85-100	3	Medium
100-120*	2	Medium
120-150	1	Medium
150-200*	0	Soft
200-300	00	Soft
*Penetration grade is no longer readily available. It is provided to facilitate field identification if necessary.		

ASPHALT CUTBACK

1-7. Asphalt cutback is produced during the refining process or from heated AC that is cut back with a volatile petroleum distillate (cutter stock). In contrast to AC, asphalt cutback is workable at low temperatures. Naphtha, gasoline, kerosene, jet fuel, diesel oil, and fuel oil can be used as cutter stocks. The three types of asphalt cutback are based on the rate of curing:

- **Slow-curing (SC) asphalt cutback.** It contains diesel oil or fuel oil.
- **Medium-curing (MC) asphalt cutback.** It contains a less volatile substance, such as kerosene or jet fuel.
- **Rapid-curing (RC) asphalt cutback.** It contains a highly volatile cutter stock that evaporates rapidly, such as naphtha or gasoline.

1-8. The viscosity (resistance to flow) of asphalt cutback varies according to the amount of cutter stock added and the type of AC used. As the amount of cutter stock increases, the viscosity decreases. Each type of asphalt cutback is produced in four standard grades of kinematic viscosity—70, 250, 800, and 3,000 centistokes. The numerical grade is the lowest kinematic viscosity limit at 140°F, and the upper limit is twice the lower limit. Therefore, RC-250 has a kinematic viscosity range of 250 to 500 centistokes at 140°F.

ASPHALT EMULSION

1-9. Asphalt emulsion is a nonflammable liquid substance that is produced by combining asphalt and water with an emulsifying agent such as soap, dust, or certain colloidal clays. The emulsifying agent promotes emulsification and controls certain physical properties of the emulsion. Emulsion is deposited on a surface; and when the water and asphalt break (separate), they leave a thin film of AC.

1-10. The two kinds of emulsions—anionic and cationic—are established according to their electrical charge. The use of anionic (negatively charged) emulsion is restricted because it does not adhere easily to negatively charged siliceous aggregates. However, certain cationic (positively charged) emulsions improve adherence to negatively charged aggregates. In addition, cationic emulsions coat damp aggregates better than anionic emulsions.

1-11. The three basic types of emulsions are rapid setting (RS), medium setting (MS), and slow setting (SS). The setting rate, which is the rate of asphalt and water separation, depends on the amount and kind of emulsifying agent used. Asphalt emulsion is graded on the basis of viscosity and grouped according to its use. (See *Table 1-2*.)

Table 1-2. Asphalt Emulsions

Emulsion	Type	Viscosity Grade	Mixing Ability
Anionic	RS	RS-1, RS-2	Spraying
	MS	MS-2	Mixing and spraying
	SS	SS-1, SS-1H	Mixing and spraying
Cationic	RS-C	RS-2C, RS-3C	Spraying
	MS-C	MS-C	Mixing (sand) and spraying
	SS-C	SS-C, SS-CH	Mixing and spraying

1-12. Emulsions are nonflammable and liquid at ordinary temperatures. Using water in an emulsion is a disadvantage in freezing weather because the water freezes and breaks the emulsion. Emulsions are also difficult to store or stockpile since they tend to break while still in unopened drums. Due to these disadvantages, emulsions are not used extensively in the theater of operations (TO).

TAR

1-13. RT is manufactured in 12 grades of viscosity (hardness) at a temperature of 77°F. Grades 1 through 7 are liquid, and grades 8 through 12 are semisolid to solid. Liquid RT contains more liquid coal distillates than solid RT.

1-14. RT is reduced with a coal-tar distillate to form RTCB, which is manufactured only in viscosity grades 5 and 6. Highly volatile coal distillate, such as benzene or a solution of naphthalene and benzol, is used to cut back the heavy grades of RT to produce RTCB. RTCB is similar to asphalt cutback and cures rapidly. The viscosity grades of RT and RTCB are comparable to the viscosity grades of asphalt cutback and AC. (See *FM 5-472* for more information.)

SECTION II - AGGREGATE

FUNCTION

1-15. Aggregate is combined with bitumen to form a bituminous wearing surface. This nonskid surface transmits the load from the surface to the base and takes the abrasive wear of the traffic. Aggregate consists of a mineral filler and crushed stone, gravel, sand, slag, coral, or similar material.

TYPES OF AGGREGATE

1-16. For bituminous construction, aggregate is classified according to particle size. The size of aggregate used varies with construction requirements, and gradation particles largely determine the mechanical stability of a bituminous mix. Some types of bituminous surfaces require an aggregate gradation with a wide range of particle sizes, while other types require a uniform gradation of particles that are the same size. Particle size is determined by sorting the materials on standard sieves. (See *FM 5-472* for sieve analysis.) The three types of aggregate are—

- **Coarse aggregate (CA).** It consists of crushed rock, broken gravel, slag, or other mineral materials that are retained on a number 8 sieve.
- **Fine aggregate (FA).** It consists of sand or small pieces of crushed rock that pass through a number 8 sieve but are retained on a number 200 sieve.
- **Mineral filler.** It consists of inert, nonplastic particles that pass through a number 200 sieve. Rock dust, hydrated lime, inert fine soil, and portland cement can be used as mineral fillers. Most clays are too plastic for this purpose.

1-17. These three types of aggregate are blended in different proportions to produce various aggregate gradations. Trial-and-error calculations determine the percentage (blend) of each stockpiled aggregate used in the mix. The following aggregate gradations are used in bituminous construction:

- **Uniform gradation.** It consists of same-size aggregate particles that are <1 inch.
- **Macadam gradation.** It consists of uniformly graded aggregate particles that are ≥ 1 inch. The particles are about the same size, but variations do exist. For example, a macadam gradation designated as 1 1/2-inch aggregate may include 1- and 2-inch particles but most of the particles will be about 1 1/2 inches.
- **Open gradation.** It consists of aggregate particles ranging in size from coarse to fine. Open spaces or voids remain in the mix because there is insufficient FA or mineral filler to fill the voids left by CA.
- **Dense gradation.** It consists of a blended, well-graded mix of CA, FA, and mineral filler. In contrast to open gradation, dense gradation has few voids because FA and mineral filler fill the voids around the CA.

CHARACTERISTICS

1-18. The interlocking aggregate action in a bituminous surface is more pronounced when angular, rough-textured particles are used, because angular particles need more asphalt for coating than round particles. Using as much asphalt as possible in a bituminous surface ensures durability without impairing stability. Aggregate must be strong and durable to resist weathering and must hold up under applied loads without cracking or breaking. (See *FM 5-472* for tests to determine aggregate strength and durability.)

1-19. Aggregate particles must be clean and dry so that bitumen can penetrate the pores and hold the particles together. Bitumen will not penetrate or adhere if aggregate is coated with clay or dust or if the pores are wet. In addition, aggregate must be hot and dry for hot mixes. The moisture content should be <2 percent for cutback mixes and <5 percent for emulsions. Hydrophilic aggregate is clean and dry, and it does not retain a bituminous coating in the presence of water. Standard laboratory tests for aggregate gravity, absorption, stripping, and moisture properties are described in *FM 5-472*.

Chapter 2

Bituminous Design

Bituminous design consists of selecting the bitumen and aggregate gradation, blending the aggregates to conform to the selected gradation, determining the optimum content, and calculating the job-mix formula (JMF). After determining the percentages of materials, calculate the total quantity of materials needed for the project. This chapter details the design of a typical high mix. Low mixes are designed by the same method, although many steps are often omitted because the allowable variations are great enough that accurate measurements are unnecessary.

BITUMEN SELECTION

2-1. The selection of a particular bituminous material depends on the type of pavement, the range of temperatures, the amount of rainfall, the type and volume of traffic, and the type and availability of equipment. In general, hard-penetration grades of AC are used in warm climates and soft-penetration grades are used in cold climates. Heavy grades of asphalt cutback and tar are normally used in warm regions, and light grades are used in cool regions. AC is generally more suitable for high traffic volume than cutback. Asphalt and tar do not necessarily bond to each other; thus, bonding also becomes a consideration in bitumen selection. *Tables 2-1 and 2-2*, pages 2-2 through 2-4, list the characteristics and uses of bituminous materials.

ASPHALT CEMENT

2-2. AC is usually used in hot-mix pavements and is solid at 77°F. To make AC fluid enough for mixing with aggregate or for spraying, heat it to a temperature of 250° to 350°F. A disadvantage of AC is that adequate heating equipment may not always be available. The various penetration grades of AC are suitable for plant mixes, penetration macadams, and surface treatments.

ASPHALT CUTBACK

2-3. Different types and grades of asphalt cutback are used during various climatic conditions. When the cutter stock evaporates, it leaves AC as an active bonding and waterproofing agent. Consider the prevailing atmospheric temperature during construction when selecting the grade of asphalt cutback. Light grades are usually used in cool weather. If the preferred grade and type of asphalt cutback is unavailable, use a comparable grade of another type. For example, using RC-70 instead of MC-70 or using RC-300 instead of MC-300 will not seriously affect the finished structure. In the field, light grades of asphalt cutback can be made by adding solvents to AC or to heavier grades of asphalt cutback. (See *Chapter 5* for more information on the field manufacture of asphalt cutbacks.)

Table 2-1. Characteristics of Bituminous Materials

Material	Form	Grade Designa-tion	Temperature of Application Ranges				Flash Point		Remarks
			Spraying[1]		Mixing				
			°F	°C	°F	°C	°F	°C	
Penetrative soil binder	Liquid		130-150	55 - 65			80	27	Contains naphtha. Caution: Highly flammable.
Cutback (RC)	Liquid—asphalt residues fluxed with more volatile petroleum distillate	RC-70 RC-250 RC-800 RC-3,000	105-175[2] 145-220 180-255 215-290[2]	41-79[2] 63-104 82-124[2] 102-143[2]	95-135 135-175 170-210 200-240	35-57 57-79 77-99 93-116	80 80 80	27 27 27	RC cutbacks contain highly volatile naphtha cutter stock. Naphtha evaporates quickly, leaving an AC binder and permitting early use of the surface. Caution: Highly flammable.
Cutback (MC)	Liquid—asphalt residues fluxed with more volatile petroleum distillate	MC-30 MC-70 MC-250 MC-800 MC-3,000	70-140 105-175 145-220 180-255 215-290	21-60 41-79 63-104 82-124 102-143	55-95 95-135 135-175 170-210 200-240	13-35 35-57 57-79 77-99 93-116	100 100 150 150 150	37 37 65 65 65	MC cutbacks contain less volatile kerosene cutter stock. Kerosene evaporates less rapidly than naphtha. Caution: Flammable.
Cutback (SC)	Liquid—asphalt residues fluxed with more volatile petroleum distillate	SC-70 SC-250 SC-800 SC-3,000	105-175 145-220 180-225 215-290	41-79 63-104 82-124 102-143	95-135 135-175 170-210 200-240	35-57 57-79 71-99 93-116	150 175+ 200+ 225+	65 79+ 93+ 107+	SC cutbacks contain slightly volatile diesel-fuel cutter stock. Diesel fuel evaporates slowly. Caution: Flammable.
AC	Solid	40-50 60-70 85-100 120-150 200-300	285-350 285-350 285-350 260-325	141-177 141-177 141-177 127-163	300-350 275-325 275-325 275-325 200-275	149-177 135-163 135-163 135-163 93-135			Penetrations 40 to 100 are used for crack and joint fillers. Penetrations 70 to 300 are used for plant mixes, penetration macadam, and surface treatment. Test to determine the flash point.
Powdered asphalt	Hard and solid asphalt ground to powder								Used with SC to produce extra tough road surfaces.

[1]Low temperature is based on a 200-centistoke kinematic viscosity, and the high temperature is based on a 50-centistoke viscosity.
[2]RC cutbacks are seldom used for spraying.

Table 2-1. Characteristics of Bituminous Materials (continued)

Material	Form	Grade Desig-nation	Temperature of Application Ranges				Flash Point		Remarks
			Spraying[1]		Mixing				
			°F	°C	°F	°C	°F	°C	
Asphalt emulsion (RS)	Liquid (asphalt particles held in an aqueous suspension by an emulsifying agent)	RS-1 RS-2 RS-2K RS-3K	50-140 50-140 50-140 50-140	10-60 10-60 10-60 10-60	Nonmixing 50-140 50-140 50-140	10-60 10-60 10-60 10-60			Freezing destroys emulsions. Used for road and plant mixes with CA (SS). All emulsions with “K” suffix are cationic.
Asphalt emulsion (MS)	Liquid (asphalt particles held in an aqueous suspension by an emulsifying agent)	MS-2 SM-K CM-K	50-140 50-140 50-140	10-60 10-60 10-60	50-140 50-140 50-140	10-60 10-60 10-60			
Asphalt emulsion (SS)	Liquid (asphalt particles held in an aqueous suspension by an emulsifying agent)	SS-1 SS-1H SS-K SS-KH	50-140 50-140 50-140 50-140	10-60 10-60 10-60 10-60	50-140 50-140 50-140 50-140	10-60 10-60 10-60 10-60			
RT	Liquid	RT-1 RT-2 RT-3	60-125 60-125 60-125	15-52 15-52 27-66					Priming oils. RT-4 through RT-12 are not generally used.
RTCB	Liquid	RTCB-5 RTCB-6	60-120 60-120	16-49 16-49					Patching mixtures. Caution: Flammable.
Rock asphalt	Solid								Mixed and used locally where found. Cutback may be added if necessary.

[1]Low temperature is based on a 200-centistoke kinematic viscosity, and the high temperature is based on a 50-centistoke viscosity.
[2]RC cutbacks are seldom used for spraying.

Table 2-2. Typical Uses of Bituminous Materials

Purpose or Use	Grade or Designation[1] of Asphalt Cutback[2]		
	RC	MC	SC
Dust palliative	DCA-70[3]	MC-30, -70, -250 APSB	SC-70, -250
Prime coat: Tightly bonded surfaces Loosely bonded, fine-grained surfaces Loosely bonded, coarse-grained surfaces		MC-30 MC-70 MC-250	SC-70 SC-250
Tack coat	RC-250, -800	MC-250, -800	
Surface treatment and seal coat: Coarse sand cover Clean CA cover Graded gravel aggregate cover Gravel mulch	RC-70, -250 RC-250, -800, -3,000	MC-250, -800 MC-800 MC-250-, -800 MC-250	SC-800 SC-250
Mixed-in-place road mix: Open-graded aggregate: Sand Maximum diameter 1 inch, high percentage passing No. 10	RC-70, -250	MC-800 MC-800	
Macadam aggregate	RC-250, -800		
Dense-graded aggregate: High percentage passing No. 200 Maximum diameter 1 inch, medium percentage passing No. 200		MC-250 MC-250, -800	SC-250 SC-250, -800
Premix or cold patch: Open-graded aggregate Dense-graded aggregate	RC-250	MC-800 MC-250	SC-800 SC-250
Cold-laid plant mix: Open-graded aggregate: Sand Maximum diameter 1 inch, high percentage passing No. 10 Macadam aggregate Dense-graded aggregate: High percentage passing No. 200 Maximum diameter 1 inch, medium percentage passing No. 200 Aggregate precoating followed with asphalt	RC-250, -800 RC-800 RC-800, -3,000		SC-800
Hot-laid plant mix	RC-3,000	MC-3,000	SC-3,000
Penetration macadam: Cold weather Hot weather	RC-800, -3,000		SC-3,000

[1]Prevailing temperature during construction also affects selection of bitumen and may be the determining factor rather than size and gradation of aggregate.

[2]Caution: Do not overheat aggregate when cutbacks are used to produce hot mixes.

[3]DCA-70 is a water emulsion of a polyvinyl acetate containing chemical modifiers (formerly UCAR-131). Proprietary product of Union Carbide Corporation, New York, NY.

ASPHALT EMULSION

2-4. The mixing grades of asphalt emulsion can be combined with damp aggregate with little or no heating. The recommended use depends on the setting rate and the mixing ability. Use emulsions for surface treatments, road and plant mixes, and crack and joint fillings.

TAR

2-5. Since tar does not dissolve in petroleum distillates, use it in areas where asphalt is unsuitable, such as refueling aprons at airfields where petroleum distillates are likely to be spilled. Because tar has greater penetrating qualities than asphalt, it is preferred when penetration is critical. Use hot tar for plant mixes, surface treatments, penetration macadams, and crack fillers. Use RTCB for patch mixes, surface treatments, and road mixes. Do not use open flames near storage tanks or drums of RTCB because it is highly flammable. Tar is more susceptible to temperature changes than asphalt, and tar becomes soft at high temperatures and brittle at low temperatures.

AGGREGATE SELECTION

2-6. Before including specific aggregate in a mix design, conduct a preliminary investigation of the aggregate and ensure that its physical properties conform to those described in *Chapter 1*. In addition, perform a complete analysis of the aggregate as described in *FM 5-472* and determine the quantity of aggregate available. Select the gradation specification using the criteria in *Table 2-3*, pages 2-6 through 2-9.

MIX GRADATION

2-7. Aggregates and mineral fillers can be combined to produce a dense-graded or an open-graded mix:

- **Dense-graded mix.** A dense-graded mix contains a continuous gradation of particle sizes that are coarse to very fine. Fine particles fill the voids between large particles, thereby increasing the mix's weight. A dense-graded mix is more impervious to water and provides more protection to the base and the subgrade. It usually requires less maintenance, and the asphalt life is prolonged. However, a dense-graded mix requires precise determination and control of the bitumen-aggregate ratio.
- **Open-graded mix.** An open-graded mix also contains coarse and fine particles in a continuous gradation. However, it does not contain enough fine particles to fill the voids between large particles so it is less dense. Because of the increased voids in an open-graded mix, the bitumen-aggregate ratio is less critical.

Table 2-3. Gradation Specification Limits for Bituminous Construction

Sieve Designation (Square Openings)	Percentage Passing by Weight																
	Maximum Particle Size																
	2 Inch			1 1/2 Inch			1 Inch			3/4 Inch			1/2 Inch			1/4 Inch	
	Pavements, Plant Mixes																
	Asphalt Mixture, Surface Course, Low-Pressure Tires (100 psi and Under)																
				Gradation 1			Gradation 2			Gradation 3			Gradation 4			Gradation 5	
				A	B	C	A	B	C	A	B	C	A	B	C	A	B	C
1 1/2 inch				100	100	100	---	---	---	---	---	---	---	---	---	---	---	---
1 inch				79-95	83-96	86-98	100	100	100	---	---	---	---	---	---	---	---	---
3/4 inch				70-84	74-86	78-90	80-95	84-96	90-98	100	100	100	---	---	---	---	---	---
1/2 inch				61-75	66-79	71-84	68-86	74-89	79-93	80-95	84-96	87-98	100	100	100	---	---	---
3/8 inch				54-68	60-72	65-78	60-77	66-82	72-87	72-86	76-88	80-92	79-94	81-95	85-96	100	100	100
No. 4				42-54	48-60	54-66	45-60	52-68	60-75	55-70	61-74	67-80	59-73	64-80	72-85	75-95	78-95	80-95
No. 8				33-45	39-51	45-57	34-49	41-57	49-64	43-57	49-62	56-68	46-60	53-67	60-73	60-79	63-83	66-86
No. 16				26-37	31-42	37-48	26-40	33-47	40-54	34-46	39-51	46-57	39-49	42-54	48-60	46-65	49-68	52-72
No. 30				19-29	23-33	29-38	19-30	25-37	30-43	26-36	30-40	36-46	28-38	32-42	37-48	33-51	36-54	38-58
No. 50				14-22	17-25	21-29	14-23	18-28	21-32	18-27	21-30	26-34	19-28	22-30	26-35	21-37	24-40	26-43
No. 100				8-14	10-16	13-19	8-16	11-18	13-21	10-17	13-20	16-22	11-18	13-20	16-22	12-24	14-26	16-28
No. 200[1]				3-6	3.5-6.5	4-7	3-7	3.5-7.6	4-8	3-7	3.5-7.5	4-8	4-8	4-8	4-8	5-9	6-10	7-11
Asphalt Mixture, Surface Course, High-Pressure Tires (Over 100 psi), Optional for Low-Pressure Tires																		
							Gradation 6			Gradation 7								
							A	B	C	A	B	C						
1 inch							100	---	---	---	---	---						
3/4 inch							86-97	---	---	100	---	---						
1/2 inch							76-90	---	---	82-96	---	---						
3/8 inch							69-83	---	---	79-90	---	---						
No. 4							55-70	---	---	60-73	---	---						
No. 8							45-59	---	---	46-60	---	---						
No. 16							35-48	---	---	34-48	---	---						
No. 30							26-38	---	---	24-38	---	---						
No. 50							17-29	---	---	15-28	---	---						
No. 100							10-20	---	---	8-17	---	---						
No. 200[1]							3-6	---	---	3-6	---	---						

[1]Fraction passing No. 200 sieve shall conform to the following gradation limits: 0.05-in, 70-100% fines; 0.02-in, 35-65% fines; 0.005, 10-22% fines.
[2]Maximum particle size is 2 1/2 inch.
[3]Clean sand or sand gravel may be used instead of crushed rock.
[4]Maximum particle size will pass a No. 4 sieve.

Table 2-3. Gradation Specification Limits for Bituminous Construction (continued)

Sieve Designa-tion (Square Openings)	Percentage Passing by Weight																	
	Maximum Particle Size																	
	2 Inch			1 1/2 Inch			1 Inch			3/4 Inch			1/2 Inch			1/4 Inch		
	Pavements, Plant Mixes																	
	Asphalt Mixture, Binder Course, High- and Low-Pressure Tires																	
	Gradation 8			Gradation 9			Gradation 10			Gradation 11			Gradation 12					
	A	B	C	A	B	C	A	B	C	A	B	C	A	B	C			
2 inch	100	100	100	---	---	---	---	---	---	---	---	---	---	---	---			
1 1/2 inch	79-95	81-95	82-96	100	100	100	---	---	---	---	---	---	---	---	---			
1 inch	68-84	70-86	71-88	73-95	75-95	79-95	100	100	100	---	---	---	---	---	---			
3/4 inch	60-75	62-78	64-79	64-83	67-85	70-87	72-95	75-95	81-96	100	100	100	---	---	---			
1/2 inch	52-67	54-69	56-72	55-73	59-77	62-80	61-82	65-85	69-89	70-95	74-95	77-95	100	100	100			
3/8 inch	46-60	48-63	50-66	48-65	52-69	55-73	53-72	58-76	62-81	60-80	64-84	68-88	71-95	75-95	78-95			
No. 4	32-47	34-49	37-52	35-51	39-55	42-58	38-54	43-59	48-66	42-60	47-65	52-70	50-71	54-75	59-80			
No. 8	22-37	24-39	27-42	26-40	29-45	33-49	28-43	32-47	37-53	30-49	36-54	29-57	36-56	40-60	45-66			
No. 16	17-30	18-31	20-34	19-32	22-36	25-39	20-34	24-38	28-43	23-39	27-43	29-46	26-44	29-48	34-52			
No. 30	12-23	14-24	15-26	14-25	16-27	18-30	15-27	17-29	20-33	17-30	19-23	22-36	19-34	22-37	25-40			
No. 50	8-18	9-18	10-19	10-18	11-20	12-21	10-20	11-22	14-24	12-23	13-24	15-26	13-25	15-27	17-29			
No. 100	5-12	5-12	6-14	5-12	6-13	7-14	7-14	7-15	8-16	7-16	8-17	9-18	9-18	10-19	11-19			
No. 200[1]	3-7	3-7	3-7	3-7	3-7	3-7	3-7	3-7	3-7	3-7	3-7	3-7	4-9	4-9	4-9			
	Tar Mixture, Surface Course, Low-Pressure Tires (100 psi and under)																	
							Gradation 13			Gradation 14			Gradation 15					
							A	B	C	A	B	C	A	B	C			
1 inch							100	100	100	---	---	---	---	---	---			
3/4 inch							78-95	80-95	84-96	100	100	100	---	---	---			
1/2 inch							68-85	71-88	75-90	76-95	80-95	85-96	100	100	100			
3/8 inch							57-75	62-82	66-85	67-85	73-89	79-93	75-95	80-95	86-96			
No. 4							40-58	47-65	52-70	50-66	58-73	65-80	55-70	63-80	70-84			
No. 8							28-46	35-51	40-58	38-53	43-58	53-68	38-54	48-67	54-69			
No. 16							20-35	26-40	30-47	28-41	32-46	41-55	27-41	36-49	41-55			
No. 30							13-25	18-30	22-36	19-30	23-36	29-42	18-29	24-36	28-42			
No. 50							8-17	12-21	15-26	12-21	15-25	18-29	10-20	15-25	18-29			
No. 100							4-12	7-14	9-18	6-14	90-16	11-18	6-13	9-17	11-19			
No. 200[1]							2-8	4-10	4-10	4-10	4-10	6-10	4-10	7-10	6-10			

[1]Fraction passing No. 200 sieve shall conform to the following gradation limits: 0.05-in, 70-100% fines; 0.02-in, 35-65% fines; 0.005, 10-22% fines.

[2]Maximum particle size is 2 1/2 inch.

[3]Clean sand or sand gravel may be used instead of crushed rock.

[4]Maximum particle size will pass a No. 4 sieve.

Table 2-3. Gradation Specification Limits for Bituminous Construction (continued)

Sieve Designation (Square Openings)	Percentage Passing by Weight																	
	Maximum Particle Size																	
	2 Inch			1 1/2 Inch			1 Inch			3/4 Inch			1/2 Inch			1/4 Inch		
	Pavements, Plant Mixes																	
	Tar Mixture, Binder Course, High- and Low-Pressure Tires																	
				Gradation 16														
				A	B	C												
1 1/2 inch				100	---	---												
1 inch				70-95	---	---												
3/4 inch				56-84	---	---												
1/2 inch				44-75	---	---												
3/8 inch				36-65	---	---												
No. 4				20-95	---	---												
No. 8				12-23	---	---												
No. 16				6-23	---	---												
No. 30				2-15	---	---												
No. 50				0-8	---	---												
No. 100				0-4	---	---												
Bituminous Mixture, Surface Course																		
							Gradation 17			Gradation 18			Gradation 19					
							A	B	C	A	B	C	A	B	C			
1 inch							100	---	---	---	---	---	---	---	---			
3/4 inch							85-100	---	---	100	---	---	---	---	---			
1/2 inch							72-95	---	---	82-100	---	---	---	---	---			
3/8 inch							61-90	---	---	68-95	---	---	100	---	---			
No. 4							43-79	---	---	48-32	---	---	57-88	---	---			
No. 8							32-68	---	---	35-71	---	---	41-76	---	---			
No. 16							24-56	---	---	26-60	---	---	30-64	---	---			
No. 30							18-44	---	---	20-48	---	---	22-52	---	---			
No. 50							13-32	---	---	14-38	---	---	15-40	---	---			
No. 100							9-21	---	---	10-25	---	---	10-26	---	---			
No. 200[1]							5-12	---	---	5-12	---	---	5-12	---	---			

[1]Fraction passing No. 200 sieve shall conform to the following gradation limits: 0.05-in, 70-100% fines; 0.02-in, 35-65% fines; 0.005, 10-22% fines.

[2]Maximum particle size is 2 1/2 inch.

[3]Clean sand or sand gravel may be used instead of crushed rock.

[4]Maximum particle size will pass a No. 4 sieve.

Table 2-3. Gradation Specification Limits for Bituminous Construction (continued)

Sieve Designation (Square Openings)	Percentage Passing by Weight																	
	Maximum Particle Size																	
	2 Inch			1 1/2 Inch			1 Inch			3/4 Inch			1/2 Inch			1/4 Inch		
	Pavements, Plant Mixes																	
	Tar Mixture, Binder Course, High- and Low-Pressure Tires																	
	Gradation 20[2]						Gradation 21			Gradation 22								
	A	B	C				A	B	C	A	B	C						
2 1/2 inch	100	---	---				---	---	---	---	---	---						
2 inch	90-100	---	---				---	---	---	---	---	---						
1 1/2 inch	35-70	---	---				---	---	---	---	---	---						
1 inch	0-15	---	---				100	---	---	---	---	---						
3/4 inch	0-9	---	---				90-100	---	---	---	100	---						
1/2 inch	0-5	---	---				55-80	---	---	---	90-100	---						
3/8 inch	---	---	---				20-55	---	---	---	40-75	---						
No. 4	---	---	---				0-10	---	---	---	5-25	---						
No. 8	---	---	---				0-5	---	---	---	0-5	---						
Bituminous Mixture, Surface Course																		
				Gradation 23			Gradation 24			Gradation 25			Gradation 26[3]			Gradation 27[3]		
				A	B	C	A	B	C	A	B	C	A	B	C	A	B	C[4]
1 1/2 inch				100	---	---	---	---	---	---	---	---	---	---	---	---	---	---
1 inch				90-100	---	---	100	100	---	---	---	---	---	---	---	---	---	---
3/4 inch				40-75	---	---	90-100	90-100	---	100	100	---	---	---	---	---	---	---
1/2 inch				15-35	---	---	20-55	45-75	---	90-100	90-100	---	100	---	---	---	---	---
3/8 inch				0-15	---	---	0-15	20-55	---	40-70	40-75	---	85-100	---	---	100	100	---
No. 4				0-5	---	---	0-5	0-10	---	0-15	5-25	---	10-30	---	---	85-100	95-100	100
No. 8				---	---	---	---	0-5	---	0-5	0-5	---	0-10	---	---	10-40	70-92	50-100
No. 16				---	---	---	---	---	---	---	---	---	---	---	---	0-10	45-80	---
No. 30				---	---	---	---	---	---	---	---	---	---	---	---	---	26-56	---
No. 50				---	---	---	---	---	---	---	---	---	---	---	---	---	5-30	---
No. 100				---	---	---	---	---	---	---	---	---	---	---	---	---	0-8	---

[1]Fraction passing No. 200 sieve shall conform to the following gradation limits: 0.05-in, 70-100% fines; 0.02-in, 35-65% fines; 0.005, 10-22% fines.

[2]Maximum particle size is 2 1/2 inch.

[3]Clean sand or sand gravel may be used instead of crushed rock.

[4]Maximum particle size will pass a No. 4 sieve.

2-8. The allowable variation in gradation of some low and intermediate mixes is great enough that natural or man-made aggregates can be used without any special preparation. High mixes and some intermediate mixes have such a small allowable variation in gradation that two or more aggregates must be blended to obtain the desired gradation.

2-9. The following example shows how to determine specific requirements for a surface course:

Example: You are using an asphalt finisher to place a 2-inch surface course on a main supply route (MSR). The maximum aggregate size available is 1 inch, and a limited supply of limestone dust is available to use as a mineral filler. The bitumen is AC, so an aggregate gradation must be selected.

Solution:

- Surface course thickness: 2 inches.
- Bitumen: AC.
- Tire pressure: Low (truck tires have <100 pounds per square inch [psi]).
- Maximum aggregate size available: 1 inch.
- Method of placement: Machine (2 inches x 0.5 = 1 inch).
- Gradation type: Open-graded (conserves limestone dust).

AGGREGATE BLENDING

2-10. Aggregate blending is proportionately mixing several aggregate gradations to obtain one desired aggregate gradation. The normal procedure is to mix three or four aggregates from various sources. Record the results of gradation tests for each source on Department of Defense (DD) Form 1207 (*Figure 2-1*, pages 2-11 and 2-12) or present them in tabular form.

2-11. Use DD Form 1217 (*Figure 2-2*, pages 2-13 and 2-14) as a work sheet to calculate the aggregate blend. There are several methods for determining the correct blend; however, use the test-strip method because other methods require complicated graphs and formulas.

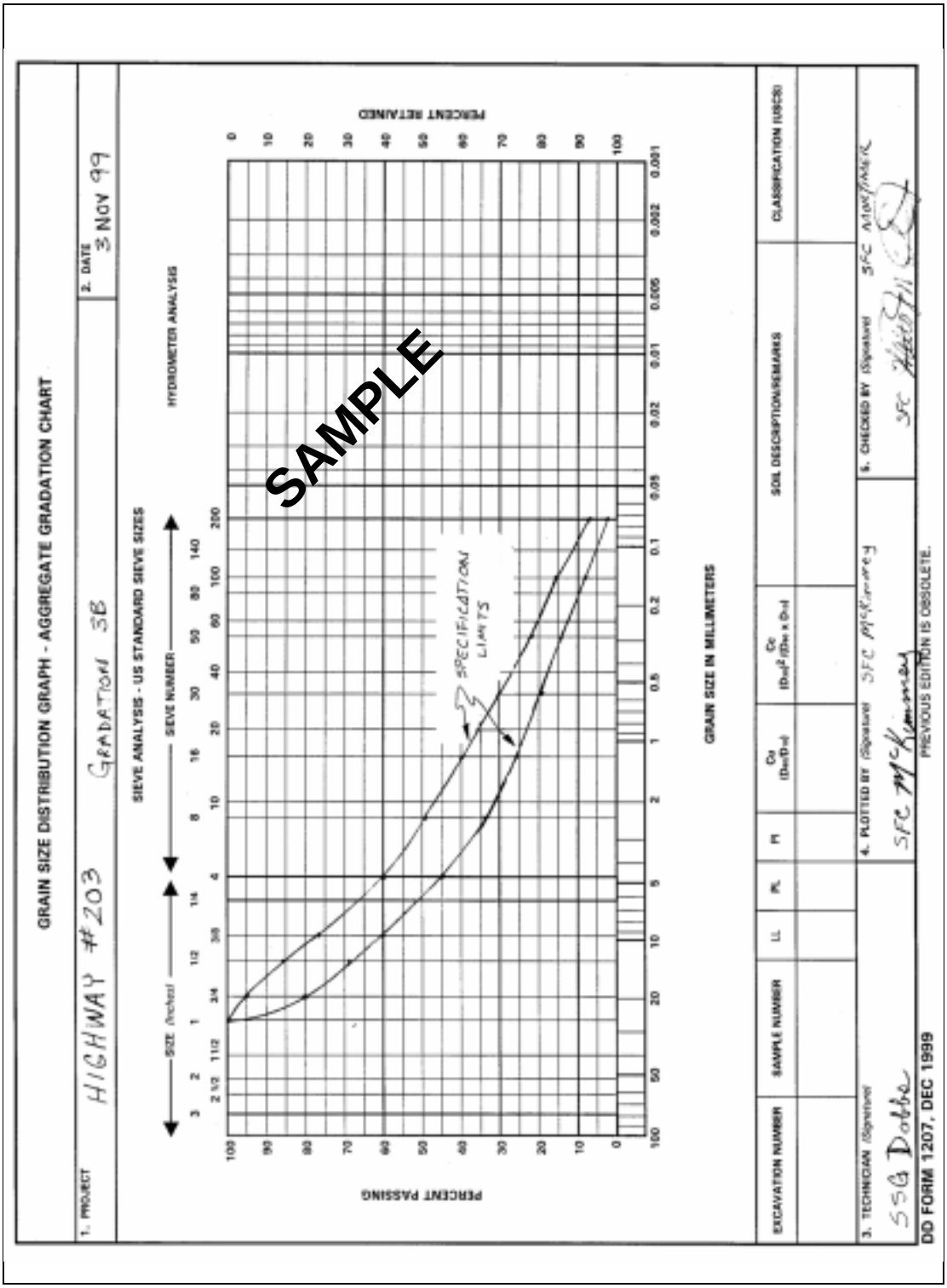

Figure 2-1. Sample DD Form 1207

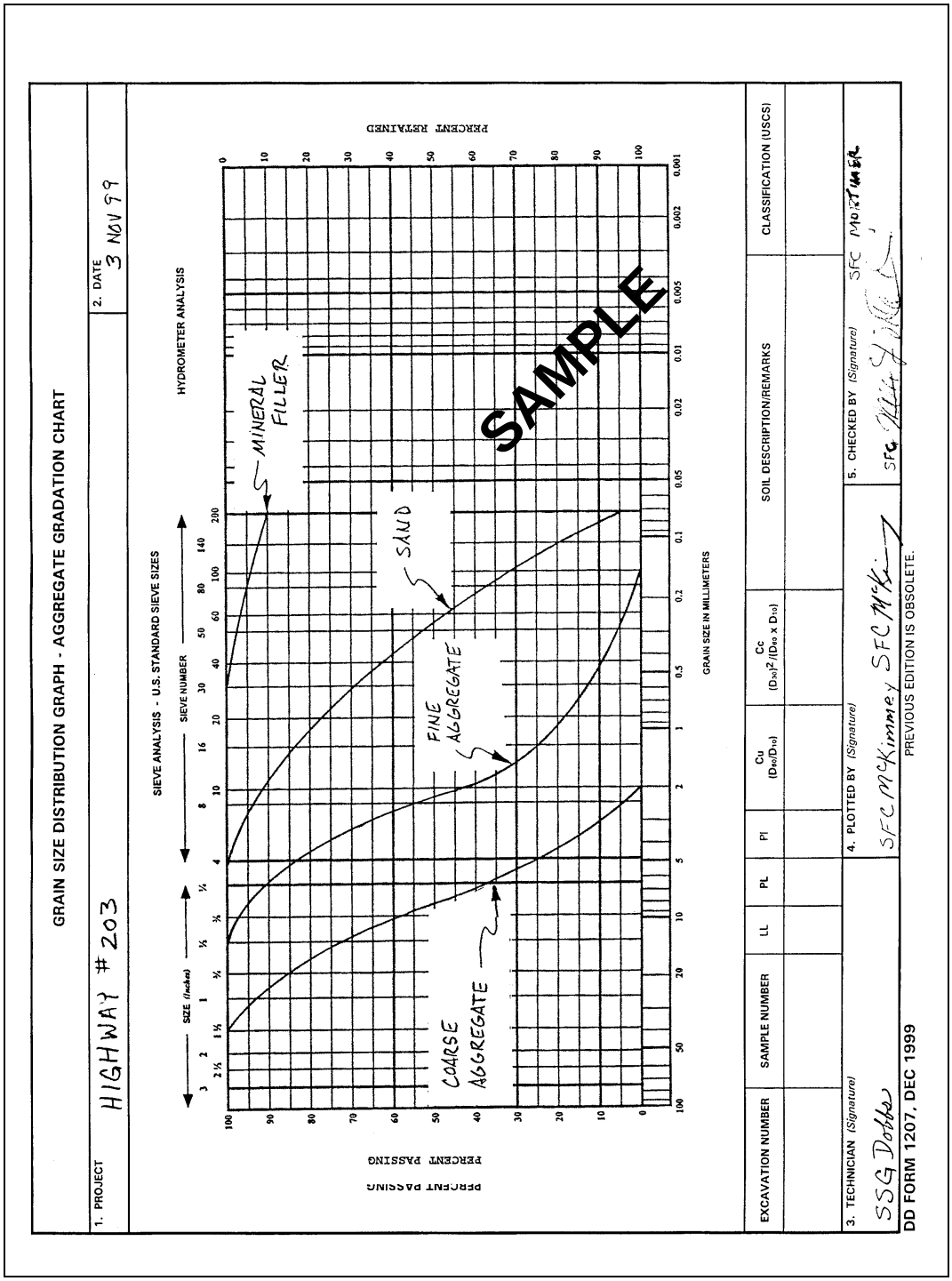

Figure 2-1. Sample DD Form 1207 (continued)

BITUMINOUS MIX DESIGN - AGGREGATE BLENDING

DATE: 5 Apr

PROJECT: Highway #203

JOB: No. 47236

AGGREGATE GRADATION NUMBER: 2A

GRADATION OF MATERIAL

SIEVE SIZE (To be entered by Technician): →	1"	3/4"	1/2"	3/8"	#4	#8	#16	#30	#50	#100	#200
MATERIAL USED	PERCENT PASSING										
CA	100	72	46	33	12	2	0	0	0	0	0
FA	100	100	98	94	75	54	33	13	2	0	0
FRBS	100	100	100	100	100	98	90	76	58	35	3
LSD	100	100	100	100	100	100	100	100	98	95	90
DESIRED:	100	80-95	68-86	60-77	45-60	34-49	26-40	19-30	14-23	8-16	3-7

COMBINED GRADATION FOR BLEND - TRIAL NUMBER 1

SIEVE SIZE (To be entered by Technician): →		1"	3/4"	1/2"	3/8"	#4	#8	#16	#30	#50	#100	#200
MATERIAL USED	% USED	PERCENT PASSING										
CA	45	45.0	32.4	20.7	14.9	5.4	0.9	0	0	0	0	0
FA	25	25.0	25.0	24.5	23.5	18.8	[illegible]	8.3	3.3	0.5	0	0
FRBS	25	25.0	25.0	25.0	25.0	26.0	[illegible]	22.5	19.0	14.5	8.8	0.8
LSD	5	5.0	5.0	5.0	5.0	5.0	[illegible]	[illegible].0	5.0	4.9	4.8	4.5
BLEND:		100.0	87.4	75.2	68.4	34.2	35.8	35.8	27.3	19.9	13.6	5.3
DESIRED:		100.0	87.5	77.0	68.5	52.5	33.0	33.0	24.5	18.5	12.0	5.0

SAMPLE

COMBINED GRADATION FOR BLEND - TRIAL NUMBER 2

SIEVE SIZE (To be entered by Technician): →		1"	3/4"	1/2"	3/8"	#4	#8	#16	#30	#50	#100	#200
MATERIAL USED	% USED	PERCENT PASSING										
CA	45	45.0	32.4	20.7	14.9	5.4	0.9	0	0	0	0	0
FA	30	30.0	30.0	29.4	28.2	22.5	16.2	9.9	3.9	0.6	0	0
FRBS	20	20.0	20.0	20.0	20.0	20.0	19.6	18.0	15.2	11.6	7.0	0.6
LSD	5	5.0	5.0	5.0	5.0	5.0	5.0	5.0	5.0	4.9	4.8	4.5
BLEND:		100.0	87.4	75.1	68.1	52.9	41.7	32.9	24.1	17.1	11.8	5.1
DESIRED:		100.0	87.5	77.0	68.5	52.5	41.5	33.0	24.5	18.5	12.0	5.0

DD Form 1217, DEC 65 PREVIOUS EDITION OF THIS FORM IS OBSOLETE.

Figure 2-2. Sample DD Form 1217

COMBINED GRADATION FOR BLEND - TRIAL NUMBER FINAL

SIEVE SIZE (To be entered by Technician): →		1"	3/4"	1/2"	3/8"	#4	#8	#16	#30	#50	#100	#200	
MATERIAL USED	% USED	PERCENT PASSING											
CA	45	45.0	32.4	20.7	14.9	5.4	0.9	0	0	0	0	0	
FA	30	30.0	30.0	29.4	28.2	22.5	16.2	9.9	3.9	0.6	0	0	
FRBS	20	20.0	20.0	20.0	20.0	20.0	19.6	18.0	15.2	11.6	7.0	0.6	
LSD	5	5.0	5.0	5.0	5.0	5.0	5.0	5.0	5.0	4.9	4.8	4.5	
BLEND:		100.0	87.4	75.1	68.1	52.4	41.7	32.9	24.1	17.1	11.8	5.1	
DESIRED:		100.0	87.5	77.0	68.5	52.5	41.5	33.0	24.5	18.5	12.0	5.0	

COMBINED GRADATION FOR BLEND - TRIAL NUMBER

SIEVE SIZE (To be entered by Technician): →													
MATERIAL USED	% USED	PERCENT PASSING											
BLEND:													
DESIRED:													

SAMPLE

REMARKS

TECHNICIAN (Signature)	COMPUTED BY (Signature)	CHECKED BY (Signature)
PVT W. D. Atkins	SGT George M. Bowers	2LT Arnold M. Scott

DD Form 1217 Reverse, DEC 65

Figure 2-2. Sample DD Form 1217 (continued)

EXAMPLE OF AGGREGATE BLENDING

2-12. This example shows how to determine aggregate blending. Use gradation 2A as the specification limit, and refer to *Figure 2-1*, page 2-11, for the gradations of stockpile samples. Complete a DD Form 1217 (*Figure 2-2*, page 2-13) for a bituminous mix design.

Gradation of Material

2-13. Complete this section as follows:

- Record the sieve sizes and percents passing for all four aggregates.
- Enter the specified gradation limits across the desired row of the section for reference.
- Enter 100 percent in all the blanks to the left of the 100 percent passing for each aggregate. (When 100 percent passes any given sieve, it will also pass larger sieves.)

Combined Gradation for Blend—Trial Number 1

2-14. Complete this section as follows:

- Enter the mean of the specified gradation limits in the desired row. For example, the percentage of the specified gradation limits for a 3/4-inch sieve is 0.5 x (80 + 95) = 87.5 percent.
- Estimate the percent used. The first estimate should be the mineral-filler value. In this example, the mineral filler is limestone dust (LSD). Estimate the percent used by calculating the percent necessary to satisfy the number 200 requirements. For example, 90 percent of the LSD passed the number 200 sieve at the stockpile. The desired amount passing is 5 percent with a low limit of 3 percent, so use 4 percent for trial number 1. The percent used is 0.04 x 90 = 3.6.
- Calculate the percent passing for each sieve size and gradation using the following formula: *percent passing = percent used x gradation of material*. For example, trial number 1 indicates that the mix design contains 45 percent CA and the gradation test shows that 72 percent of the CA passed the 3/4-inch sieve at the stockpile. Therefore, the percent passing is 0.45 x 72 = 32.4.
- Examine other gradations that contribute to the percent passing. For example, *Figure 2-2* shows that only 3 percent of the fine river-bar sand (FRBS) passed the number 200 sieve at the stockpile. Thus, any normal FRBS value would affect the percent passing the number 200 sieve by less than one. Four percent would be somewhat low, so use 5 percent. The percent passing is 0.05 x 90 = 4.5.
- Add the columns for each sieve and compare the totals to the desired gradation range. Ensure that the total of the percent-used column is 100. When blending three aggregates, find the intermediate aggregate percent-used column by subtracting the two predetermined percent-used figures from 100. If you are blending more than three aggregates, subtract the two predetermined percent-used figures from 100 and divide this figure by the number of intermediate aggregates. This yields the trial percent used for each aggregate. For example, if the

percent of CA used is 45, the percent of FA used is 5, and the two intermediate aggregates are FA and FRBS, the intermediate aggregate percent is 25 as shown in the following calculation:

$$\frac{1}{2}(100 - 45 - 5) = \frac{50}{2} = 25 \text{ percent}$$

Combined Gradation for Blend—Trial Number 2

2-15. Complete this block as follows:

- Use a series of calculations to obtain the percents used for the second trial.
- Calculate the average of the specified gradation range for the percent passing the second largest sieve by using the following formula:

$$T = \frac{100S(100 - S)}{100 - C}$$

where—

T = *percent passing at the stockpile*

S = *mean of the upper and lower limits of the specified gradation range for the percent passing the second largest sieve*

C = *percent passing the second largest sieve for the original gradation of the aggregate*

Example: In *Figure 2-2*, page 2-13, and the sample DD Form 1219 shown in *Figure 2-3*, the gradation range of the CA is 80 to 95 and 72 percent of the CA passed the 3/4-inch sieve at the stockpile.

Solution:

$$S = \frac{1}{2}(80 + 95) = 87.5$$

$$T = \frac{(100)(100 - 87.5)}{100 - 72} = \frac{(100)(12.5)}{28} = 44.7 \text{ or } 45 \text{ percent}$$

- Complete each block as explained in paragraph 2-14 for trial 1.

Succeeding Trials

2-16. Each succeeding trial is a refinement of the results from the preceding trial. Even if the results of the first trial are within the limits of the specified gradation, try to get a blend that is as close as possible to the means of the gradation. This allows for a slightly greater deviation in the blend, which limits the frequency of adjustments to the central plant (see *Figure 2-2*). Conduct succeeding trials as follows:

- Inspect the preceding trial and note the sieve sizes whose blend is not within the specified gradation range.
- Consider changing the percent of intermediate aggregate used to yield results that are within the specified limits.

BITUMINOUS MIX CURVES

DATE 2APR

PROJECT HIGHWAY #203

JOB No. 47236 (SURFACE COURSE)

RECAP OF MARSHALL TEST RESULTS

PERCENT BITUMEN CONTENT	3.5	4.0	4.5	5.0	5.5
UNIT WEIGHT - AGGREGATE ONLY					
UNIT WEIGHT - TOTAL MIX	150.3	150.9	151.4	151.5	150.5
STABILITY	1955	2037	2075	1884	1494
FLOW	9	9	10	12	14
PERCENT VOIDS - AGGREGATE ONLY					
PERCENT VOIDS - TOTAL MIX	6.6	5.5	4.5	3.9	3.6
PERCENT OF TOTAL VOIDS FILLED WITH BITUMEN	55.7	66.3	70.4	75.3	78.3

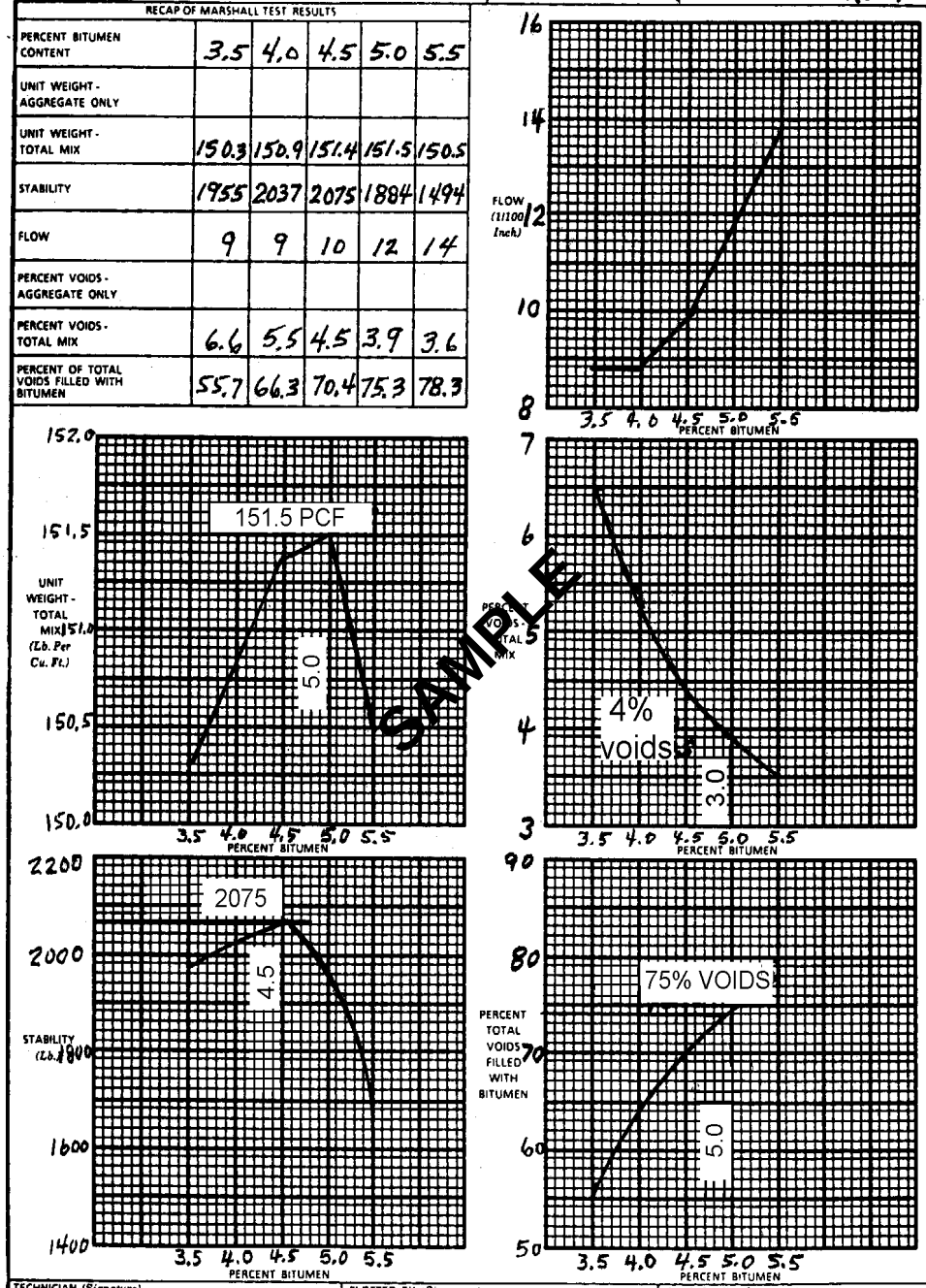

TECHNICIAN (Signature) PFC Anderson

PLOTTED BY (Signature) SP4 Cunningham

CHECKED BY (Signature) PFC Anderson

DD Form 1219, 1 DEC 65 PREVIOUS EDITION OF THIS FORM IS OBSOLETE.

Figure 2-3. Sample DD Form 1219

- Consider changing the original CA and FA figures since the original figures were only guides.

2-17. For example, in trial 1, the blend values between the number 4 and the number 200 sieves were high. Reduce the percent-passing value by reducing the amount of the fine material in the blend. Try a trial gradation of 45/30/20/5 (CA/FA/FRBS/LSD) to correct the blend.

Final Trial

2-18. Conduct a final trial when the set of values are well within the specified limits. Evaluation of the percent-used column shows that a relatively large range of values yields results that are within the specification limits. The purpose of a final trial is to obtain a blend as close as possible to the mean of the specification limits. Compute the final trial the same as preceding trials, except ensure that the desired row contains the mean value (average of high and low values) of the specifications. In the sample, trial 2 is close enough to the median that no further trials are necessary.

REPORTING

2-19. Allow an independent party to check the calculations completed for the aggregate blending and record the information on the following forms:

- **DD Form 1217 (*Figure 2-2*, page 2-13).** This is a reporting and computational form. Record the gradation of material and trial computations. Enter the contents of the final trial in the block following the last numbered trial.
- **DD Form 1207 (*Figure 2-1*, page 2-11).** This is a graphical record of the aggregate blend. Plot the upper and lower limits of the specified gradation, the mean of the specified gradation, and the calculated final blend on the same graph (the mean is sometimes omitted).

OPTIMUM BITUMEN CONTENT

2-20. The Marshall test method is used to determine the optimum bitumen content (OBC) of hot-mix pavements where stability and durability are required to withstand the action of high-pressure aircraft tires or heavy road traffic. A modified version of the Marshall test is used to determine the OBC for cold mixes. (See *FM 5-472* for complete details on the Marshall test method.)

REPORTING TEST RESULTS

2-21. Report the test results on one of the following forms:

- **DD Form 1218 (*Figure 2-4*, pages 2-19 and 2-20).** This form is the laboratory work sheet for the Marshall test. If the form is used in lieu of bituminous mix curves, plot the curves to evaluate the data.

MARSHALL METHOD - COMPUTATION OF PROPERTIES OF ASPHALT MIXTURES

DATE OF COMPUTATION: 2 APR

JOB NUMBER: 47236

PROJECT: HIGHWAY #203

DESCRIPTION OF BLEND: SURFACE COURSE 45/30/20/5 AGG BLEND

SPECIMEN NUMBER	ASPHALT CEMENT (Percent)	THICKNESS (Inches)	WEIGHT (Grams) IN AIR	WEIGHT (Grams) IN WATER	VOLUME CC	SPECIFIC GRAVITY ACTUAL	SPECIFIC GRAVITY THEORIZED	AC BY VOLUME (Percent)	VOIDS (Percent) TOTAL MIX	VOIDS (Percent) FILLED	UNIT WEIGHT TOTAL MIX (Lb./Cu.Ft.)	STABILITY (Pounds) MEASURED	STABILITY (Pounds) CONVERTED	FLOW UNITS OF 1/100 IN.
a	b	c	d	e	f	g	h	i	j	k	l	m	n	o
					(d - e)	$\frac{(d)}{(f)}$		$\frac{(b \times g)}{(Sp.Gr.\ of\ AC)}$	$(100 - 100\ \frac{(g)}{(h)})$	$\frac{(i)}{(i+j)}$	$(g \times 62.4)$		*	
A-1	3.5		1228.3	716.3	512.0	2.339						2020	2020	11
A-2	3.5		1219.5	712.2	507.3	2.404						1862	1936	10
A-3	3.5		1205.5	705.3	500.2	2.410						1821	1894	8
A-4	3.5		1206.2	708.4	497.8	2.423						1892	1868	8
AVG	3.5		—	—	—	2.409	2.579	8.3	6.6	55.7	150.3	—	1955	9
B-1	4.0		1276.9	747.3	529.6	2.411						2110	2026	10
B-2	4.0		1252.6	733.3	519.3	2.412						2025	2025	9
B-3	4.0		1243.5	730.7	512.8	2.425						1995	1995	9
B-4	4.0		1230.4	722.8	507.6	2.424						2080	2101	9
AVG	4.0		—			2.418	2.550	4.5	5.5	66.3	150.9	—	2037	9
C-1	4.5		1254.4	738.2	516.2	2.430						2050	2050	12
C-2	4.5		1238.3	726.8	511.5	2.421						2095	2095	9
C-3	4.5		1239.0	724.9	514.1	2.410						2110	2110	10
C-4	4.5		1273.5	752.0	521.5	2.442						2045	2045	10
AVG	4.5		—			2.426	2.539	10.7	4.5	70.4	151.4	—	2075	10

SAMPLE

* From conversion table

COMPUTED BY: SP-4 Alexandria M. Murray

CHECKED BY: SGT Arthur Price

DD FORM 1218, 1 DEC 65 PREVIOUS EDITION OF THIS FORM IS OBSOLETE. USAPPC V1.00

Figure 2-4. Sample DD Form 1218

MARSHALL METHOD - COMPUTATION OF PROPERTIES OF ASPHALT MIXTURES

DATE OF COMPUTATION: 3 APR

JOB NUMBER:

PROJECT:

DESCRIPTION OF BLEND:

SPECIMEN NUMBER	ASPHALT CEMENT (Percent)	THICK-NESS (Inches)	WEIGHT (Grams) IN AIR	WEIGHT (Grams) IN WATER	VOLUME CC	SPECIFIC GRAVITY ACTUAL	SPECIFIC GRAVITY THEO-RIZED	AC BY VOLUME (Percent)	VOIDS (Percent) TOTAL MIX	VOIDS (Percent) FILLED	UNIT WEIGHT TOTAL MIX (Lb./Cu.Ft.)	STABILITY (Pounds) MEASURED	STABILITY (Pounds) CON-VERTED	FLOW UNITS OF 1/100 IN.
a	b	c	d	e	f	g	h	i	j	k	l	m	n	o
					(d - e)	$\frac{(d)}{(f)}$		$\frac{(b \times g)}{(Sp.Gr.\ of\ AC)}$	$(100 - 100\ \frac{(g)}{(h)}$	$\frac{(i)}{(i+j)}$	$(g \times 62.4)$		*	
D-1	5.0		1237.9	727.0	510.9	2.423						1875	1875	14
D-2	5.0		1300.0	763.6	536.3	2.424						2130	1981	10
D-3	5.0		1273.6	746.9	526.7	2.418						1900	1824	12
D-4	5.0		1247.9	731.8	516.1	2.418						1855	1855	12
AVG	5.0		—			2.421	2.519	11.9	3.9	75.3	151.5	—	1884	12

SAMPLE

* From conversion table

COMPUTED BY: SP4 McMurray

CHECKED BY: SGT. Price

DD FORM 1218, 1 DEC 65 PREVIOUS EDITION OF THIS FORM IS OBSOLETE. USAPPC V1.00

Figure 2-4. Sample DD Form 1218 (continued)

- **DD Form 1219 (*Figure 2-3*, page 2-17).** This form presents the results of the Marshall test in graphic form. Ensure that the curves are smooth and without deviations, including extraneous values.

EVALUATING TEST RESULTS

2-22. Use the information in *Table 2-4* to evaluate the results of the Marshall test and to obtain an OBC.

Table 2-4. OBC

Test Property	Type of Mix	Point on Curve		Criteria	
		100-psi Tires[1]	200-psi Tires[1]	100-psi Tires[1]	200-psi Tires[1]
Stability	Asphalt-concrete surface course	Peak of curve	Peak of curve	≥500 lb	≥1,800 lb
	Asphalt-concrete binder course	Peak of curve[2]	Peak of curve[2]	≥500 lb	≥1,800 lb
	Sand asphalt	Peak of curve	---	≥500 lb	---
Unit weight	Asphalt-concrete surface course	Peak of curve	Peak of curve	Not used	Not used
	Asphalt-concrete binder course	Not used	Not used	Not used	Not used
	Sand asphalt	Peak of curve	---	Not used	Not used
Flow	Asphalt-concrete surface course	Not used	Not used	≤20 lb	≤16 lb
	Asphalt-concrete binder course	Not used	Not used	≤20 lb	≤16 lb
	Sand asphalt	Not used	Not used	≤20 lb	≤16 lb
Percent of voids in the total mix	Asphalt-concrete surface course	4 (3)	4 (3)	3-5 (2-4)	3-5 (2-4)
	Asphalt-concrete binder course	5 (4)	6 (5)	4-5 (3-5)	5-7 (4-6)
	Sand asphalt	6 (5)	--- (-)	5-7 (4-6)	--- (-)
Percent of voids filled with bitumen	Asphalt-concrete surface course	80 (85)	75 (80)	75-85 (80-90)	70-80 (75-85)
	Asphalt-concrete binder course	70 (75)	60 (65)[2]	65-75 (70-80)	70-80 (55-85)
	Sand asphalt	70 (75)	--- (-)	65-75 (70-80)	--- (-)

[1]Figures in parentheses are for use with bulk-impregnated specific gravity (water absorption by aggregate greater than 2.5 percent).

[2]If the inclusion of the optimum asphalt content of these points (average) causes the voids in the total mix to fall outside the limits, adjust the optimum asphalt content so that the voids in the total mix are within the limits.

2-23. Obtain the percent of bitumen for stability, the unit weight, the percent of voids in the total mix, and the percent of voids filled with bitumen from *Table 2-3*, page 2-6, and *Figure 2-3*. Average the bitumen-content percentages and note the result as the trial OBC.

Example: The bituminous mix curves shown in *Figure 2-3*, page 2-17, are for an airfield AC surface course (high-pressure tires). Determine the trial OBC.

Solution:

- Unit weight: 4.5.
- Stability: 4.3.
- Percent of voids in the total mix: 4.9.
- Percent of voids filled with bitumen: 5.
- Total: 18.7.
- Average: 18.7 ÷ 4 = 4.7 percent AC (trial OBC).

2-24. Evaluate the curves for stability, flow, percent of voids in the total mix, and percent of voids filled with bitumen at the trial OBC. Compare these values with the criteria in *Table 2-3*, page 2-6. If all the values meet the criteria, the trial OBC becomes the final OBC. If one or more of the criteria fails to meet the specifications—

- Recheck computations.
- Determine if any of the curves yields a bitumen that is out of line with the others. If so, rerun the Marshall test.
- Recheck the aggregate for conformance to the specified blend.
- Rerun the Marshall test (check apparatus first).
- Change the aggregate blend.

2-25. The test properties of the sample mix (*Table 2-5*) are within the specification limits, so designate the trial OBC as the final OBC.

Table 2-5. Marshall-Test Results of the Sample Mix

Test Property	Actual Value	Desired Value
Stability (pounds)	2,020	>1,800
Flow (1/100 inch)	10.8	<16
Percent of voids in the total mix	4.2	3 to 5
Percent of voids filled with bitumen	72.3	70 to 80

JOB-MIX FORMULA

2-26. After establishing the OBC and the aggregate blend, determine the actual percentages, by weight, of the components in the final mix. The following example shows how to determine the job-mix formula:

Example: The OBC is set at 5.5 percent, and the aggregate blend is 40/30/25/5 (CA/FA/FRBS/LSD). Determine the job-mix formula (see *Table 2-6*, page 2-23).

Solution:

$$\frac{100 - OBC}{100} = \frac{100 - 5.5}{100} = \frac{94.5}{100} = 0.945 \text{ percent of bitumen}$$

Table 2-6. Sample Job-Mix Formula

Component	Aggregate Blend	Percent of Bitumen	Percent of Mix
CA	40	x 0.945	= 37.8
FA	30	x 0.945	= 28.4
FRBS	25	x 0.945	= 23.6
LSD	5	x 0.945	= 4.7
AC			5.5
Total			100.0
NOTE: The total percent of the mix always equals 100.			

2-27. In the field, check the mix for conformance to specifications using one of the following methods.

- **Mix-percentage check.** Compare the percentage of bitumen in the completed mix with the percentage set up in the design. Perform this check daily (minimum) at the plant or the construction site. (See *FM 5-472* for further details on this procedure.)
- **Density check.** Perform a density check on samples from the compacted, cooled, and completed pavement. This test checks the mix and the construction methods used in placing and compacting the mix. (See *Chapter 4* for further details on the density test.)

Chapter 3

Equipment Used in Bituminous Operations

Properly maintaining the equipment is a basic principle of bituminous operations, and it is an important function of the operator and the maintenance crew. Much of the equipment used in bituminous operations is costly and complex. The lack of proper lubrication, adjustments, and other maintenance procedures results in lost time, costly repairs, and premature replacements. In addition, improper care can adversely affect mission accomplishment.

SECTION I - PRODUCTION EQUIPMENT

ASPHALT PLANT

3-1. The objective of an asphalt plant is to produce a mixture properly coated with asphalt that consistently meets the requirements specified in the JMF for aggregate gradation, asphalt content, and temperature. Control of the mixture quality must be initiated at the stockpiles. Each nominal aggregate size should be stockpiled so that no mixing with other aggregate stockpiles nor segregation within the stockpile occurs. The stockpiled material is normally fed into the aggregate hopper with a front-end loader. A separate hopper is provided for each aggregate to be fed into the mixture.

BATCH AND CONTINUOUS-MIX PLANTS

3-2. Batch and continuous-mix plants are shown in *Figures 3-1 and 3-2*, page 3-2. Cold-feed hoppers have individual feeders for each of the aggregates to be used in the mixture. These feeders must be set so that the desired percentage of each aggregate is fed into the plant. The rate of feed may be controlled by the gate opening, the belt speed, or other methods depending on the type of cold feed. If the aggregate feeders are improperly set, the following problems may occur:

- An aggregate hot bin will overflow with material while another hot bin runs low on material.
- The gradation of the aggregate in the mix being produced will not meet the design gradation.
- The amount of natural sand may vary from the design proportion and may exceed the amount allowed in the specifications.

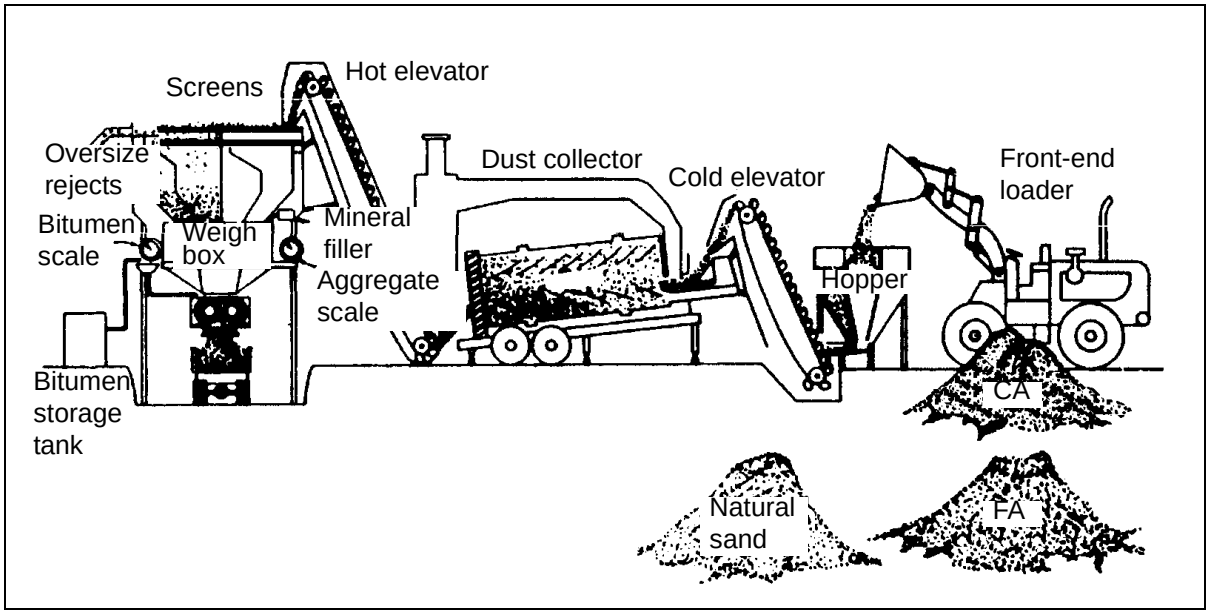

Figure 3-1. Batch Plant

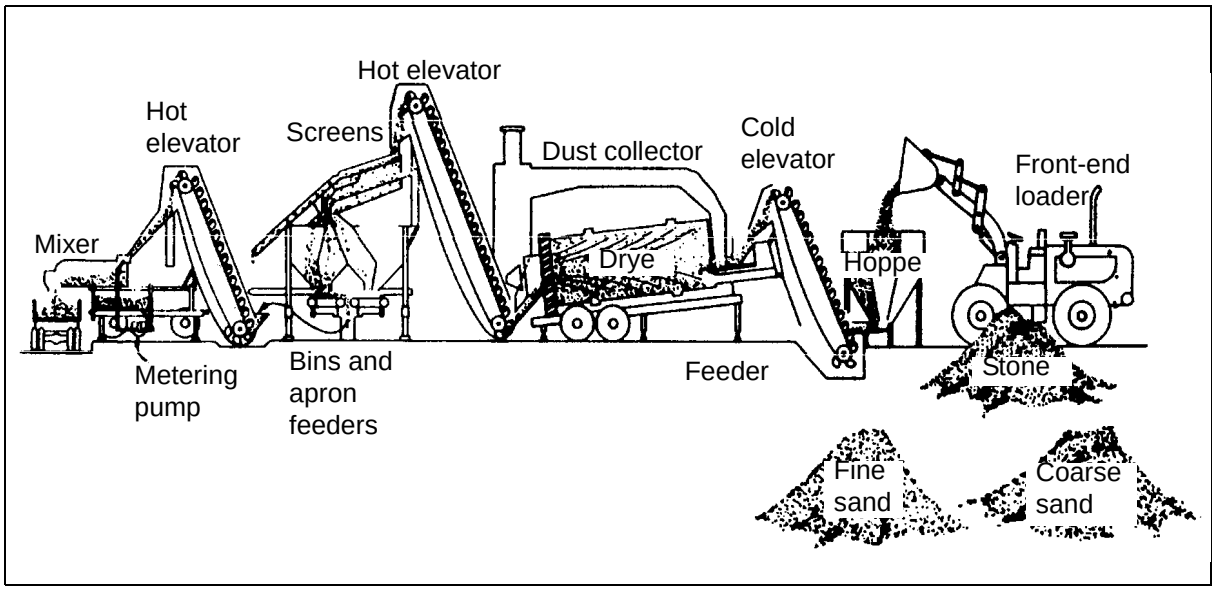

Figure 3-2. Continuous-Mix Plant

COLD-FEED CALIBRATION

3-3. Before starting a project, calibrate the cold feeds so that each feeder can feed the desired rate of material. The cold-feed calibration involves feeding one aggregate at a time onto a belt that is common to all aggregates. The belt speed should be determined before calibrating the feeders. One way to do this is to divide the belt length by the time required for one revolution. After the material is fed onto the belt, the material over a given length (for example, 5

feet) should be completely removed and weighed. The following formula can be used to convert the weight of the sample taken to tons per hour:

$$R = \frac{1.8WS}{L}$$

where—
R = rate of feed, tons per hour
W = weight of sample, pounds
S = speed of belt, feet per second
L = length of belt sampled, feet

3-4. Each aggregate should be fed at four or five different feeder settings and the rate of feed determined. A plot of this data showing the relationship between the rate of feed (tons per hour) and the feeder setting (gate opening, feeder belt speed, or any other method for setting the aggregate feeder) should be prepared for each aggregate. These plots can be used to set each feeder at the desired rate.

DRYER

3-5. After the aggregate feeders have been properly set, the aggregate is carried up the cold elevator and through the dryer. The dryer removes the moisture from the aggregate and heats the aggregate to the desired temperature.

DUST COLLECTOR

3-6. A dust collector collects the dust created in the dryer and other plant components and adds part or all of it back into the mix at the hot elevator. Many mixes have an excessive amount of dust, and the excess should be removed. The plant should have the capability to remove any desired portion of the collected dust from the mixture.

SCREENING

3-7. The aggregate exits the dryer and is carried with the returned dust up the hot elevator, over the screening deck, and into the hot bins. Screen sizes are selected so that oversize material is rejected and remaining aggregates are separated into various sizes. Ideally, the screen sizes should be selected so that the amount of material going into each hot bin is proportional to the relative volume of that hot bin. For example, suppose that the first hot bin has a volume of 100 cubic feet, the second hot bin has a volume of 50 cubic feet, and the third hot bin has a volume of 50 cubic feet. Screens should be selected so that 50 percent of the material will go into the first bin, 25 percent into the second bin, and 25 percent into the third bin.

PERCENTAGE OF EACH HOT BIN

3-8. Determine the percentage of each hot bin to be used in the mixture. To do this, properly set the cold feeds and run the material into the hot bins. Take samples of each hot bin and determine the gradation for each sample. The percentage of each bin to be used should be selected so that the gradation of the combined materials from the hot bin is equal to the JMF.

MIXING AGGREGATE AND ASPHALT

3-9. After the cold feeds and hot bins are properly set, mix the combined aggregate from the hot bins with the proper amount of asphalt. The mixing time, generally 5 seconds for dry mixing and 25 to 40 seconds for wet mixing, should be selected so that all aggregate is coated. The plant should now be set to produce a uniform asphalt concrete mixture that has proper aggregate gradation, asphalt content, and temperature. The aggregate feeders, cold elevators, dryers, dust collectors, hot elevators, screening decks, and hot bins are similar for batch and continuous-mix plants. Batch and continuous-mix plants differ in the proportioning and mixing of the asphalt mixture:

- **Batch plant.** A batch plant weighs the various nominal size aggregates and asphalt to produce a batch of material that is then mixed for a specified period of time.
- **Continuous-mix plant.** A continuous-mix plant adds aggregate and asphalt to the mixer while the final product exits the mixer. For a continuous-mix plant, the hot-bin feeder and the asphalt feeder must be calibrated to ensure that the correct proportions of each are added to the mixture. The mixing time is computed by dividing the mixer capacity by the material's rate of feed into the mixer.

DRUM MIXER

3-10. An asphalt plant that has become popular throughout the paving industry is a drum mixer (*Figure 3-3*). A drum mixer is less expensive than a batch plant and generally produces material at a higher production rate. When a drum mixer is used, the gradation must be controlled at the cold feed because no additional screening of the mixture occurs. The drum mixer is frequently used in the production of recycled asphalt concrete as well as conventional asphalt concrete.

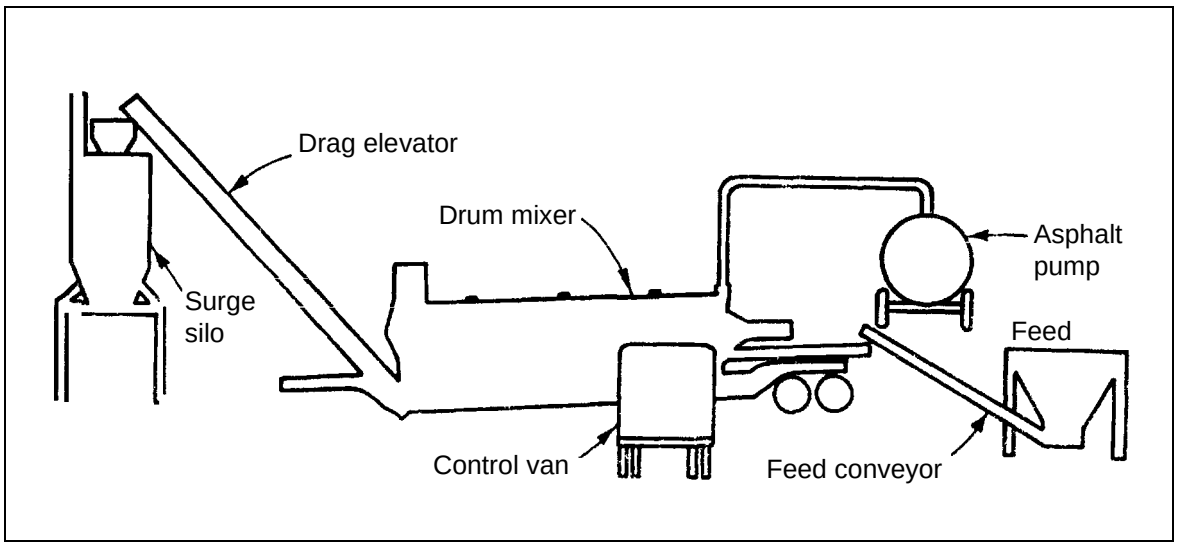

Figure 3-3. Drum Mixer

COLD-FEED CALIBRATION

3-11. The cold feed is set up much the same way as a batch plant, but a drum mixer has a weight sensor on the aggregate-feed belt that weighs a given length of the loaded belt. To calibrate cold feeds, each aggregate can be fed onto the belt at various gate openings or individual belt speeds, weighed, and the feed rate computed. These steps should be followed for each of the aggregates to be added to the mixture, and a calibration curve should be developed. A meter is used to measure and control the rate that asphalt is added to the mixture.

DRYER

3-12. The burner for the dryer on a drum mixer is located on the high side of the drum. Aggregate enters the dryer just below the burner and helps shield the asphalt binder from direct contact with the flame. Asphalt is added to the dryer at approximately midpoint to two-thirds the length to prevent close contact with the flame, which could cause overheating and damage the asphalt binder.

STORAGE SILO

3-13. A storage silo is often used to store a bituminous mixture before it is loaded onto trucks. Thus, plants can run continuously even when there is a temporary shortage of trucks. Material can be stored in silos for short periods of time; but if it is stored too long, the material may oxidize excessively and cause the bituminous binder to become hard and brittle. There are many types of storage silos, with some doing less damage than others to the asphalt concrete. As a general rule, bituminous concrete mixtures should be stored no more than 4 hours regardless of the type of storage silo used. If segregation of aggregate or drainage of bitumen occurs in the silo, use of the silo should be disallowed or changes should be made to prevent segregation and drainage.

TRAVEL PLANT

3-14. A travel plant is often used to produce cold mix in place. It does not provide control of materials or mixing as well as a central plant. Aggregate is fed to a travel plant, and the proper amount of asphalt binder is continuously mixed with the aggregate. The bituminous mixture is placed to the desired grade and compacted. The aggregate to be mixed is normally windrowed before being picked up and mixed with a travel plant.

LIQUID HANDLING EQUIPMENT

3-15. Some of the equipment used to handle liquids for paving operations are listed below:

- **Oil heater.** It is used to heat bitumen during asphalt operations and is also used during dedrumming operations.
- **Asphalt melter.** It is a skid-mounted, dedrumming melter and consists of a dedrumming tunnel that is capable of removing 85- to 100-penetration AC from 8 to 12 55-gallon drums at once. It contains a

3,000-gallon storage compartment for heating asphalt to pumping temperatures. The heated asphalt can be transferred with a standard asphalt pump to storage tanks or bituminous distributors. An asphalt melter is equipped with heat-dissipating coils in the tunnel and storage compartments, and an oil heater is used as an external heat supply.

- **Asphalt kettle.** It has a 165-gallon capacity and is primarily used in maintenance work. For more information, see *TM 5-3895-364-14*.
- **Storage tank.** It is a 5,000-gallon, horizontal, trailer-mounted, steel tank that provides bulk storage of bituminous materials. Heating coils running throughout the tank allow hot-oil heat to be applied to the asphalt. A storage tank cannot be used to transport materials because the trailer is designed to carry only an empty storage tank.
- **Truck-mounted distributor.** It has a 1,500-gallon capacity and can be used as a pump or a transporting device.

HAULING EQUIPMENT

3-16. A 20-ton dump truck is the standard equipment used to haul aggregates and plant mix. A by-product or diesel fuel is often used to coat the truck bed before loading to facilitate cleaning; however, using diesel fuel may contribute to environmental or fire hazards.

SUPPORT EQUIPMENT

3-17. Aggregate handling equipment may include a clam shell, a belt conveyor, a front loader, or a dozer depending on a plant's location and the type of cold-aggregate feeder used. A low-bed trailer, a truck-mounted crane with a barrel sling, and an air compressor with a drum-opening tool are needed to transport, store, and open drums of AC. Fuel trucks are required to supply fuel for oil heaters and power plants.

SECTION II - PLACEMENT EQUIPMENT

TRUCK-MOUNTED ASPHALT DISTRIBUTOR

3-18. A truck-mounted asphalt distributor (*Figure 3-4*) sprays bituminous material onto a prepared surface. It has the following characteristics:

- A 1,500-gallon insulated tank is equipped with heating flues to apply heat from an oil burner.
- A hydraulic pump provides power for the hydraulic motor, the bitumen pump, the fuel pump, and the air blower.
- An asphalt or bitumen pump has a delivery capacity of 400 gallons per minute (GPM).
- Bituminous material is applied through an adjustable spray bar or a hand-operated spray gun.
- Quadrant control levers and hand-operated valves control the flow of bituminous material.

- A tachometer registers the pump's discharge in GPM.
- A bitumeter shows the forward speed of the truck in feet per minute.

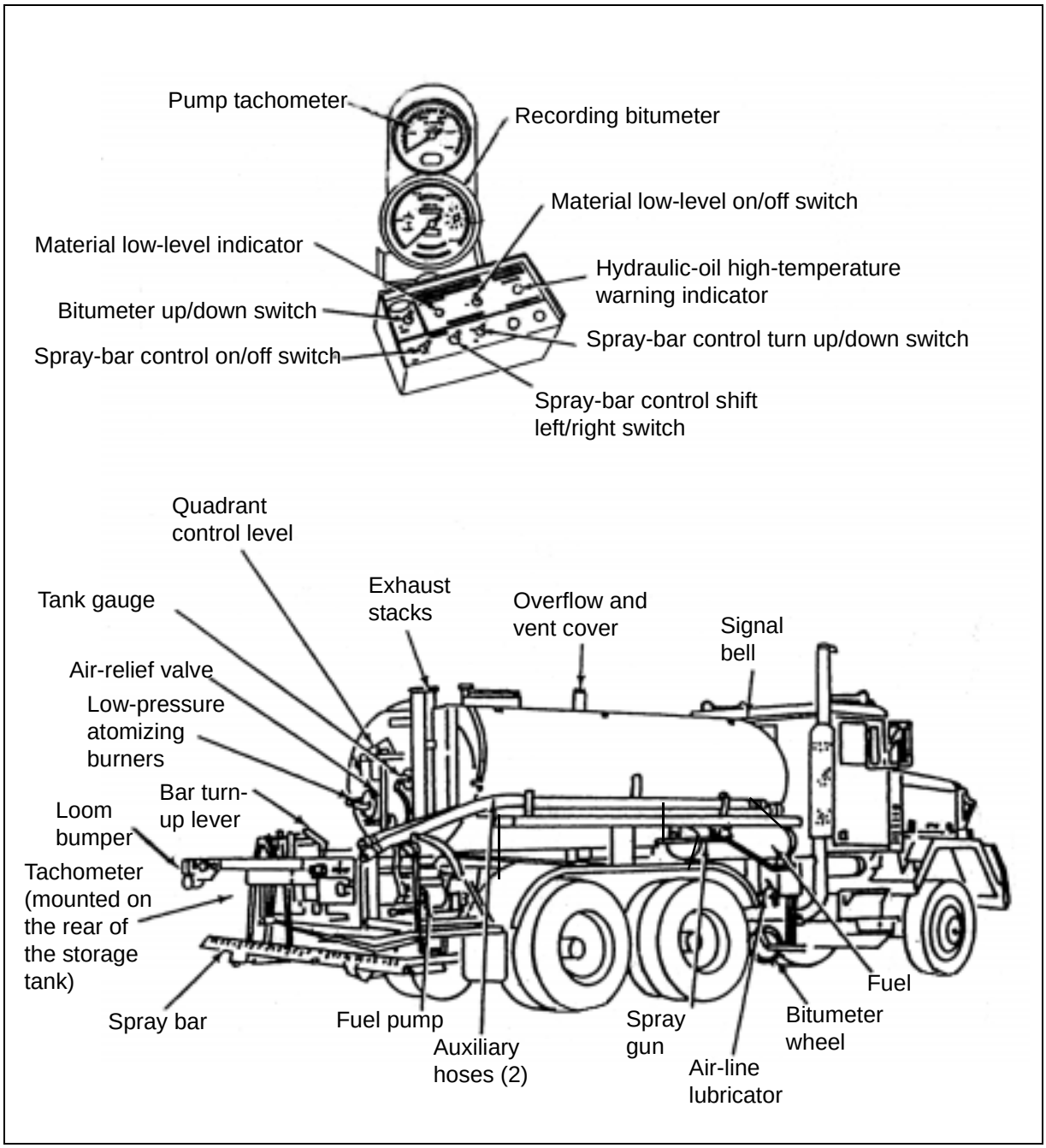

Figure 3-4. Truck-Mounted Asphalt Distributor

3-19. *Table 3-1* shows the necessary bitumeter and tachometer readings for given nozzle sizes to obtain the desired rate of bitumen application. For more information on a truck-mounted asphalt distributor, see *TM 5-3895-371-10*.

Table 3-1. Bitumen Application Rates

Gallons per Square Yard	Nozzle Size	Bitumen Counter Reading	Pump Rate of Flow Indicator Readings in GPM															
			8-Foot Bar	9-Foot Bar	10-Foot Bar	11-Foot Bar	12-Foot Bar	13-Foot Bar	14-Foot Bar	15-Foot Bar	16-Foot Bar	17-Foot Bar	18-Foot Bar	19-Foot Bar	20-Foot Bar	21-Foot Bar	22-Foot Bar	23-Foot Bar
0.10	1/8	900	80	90	100	110	120	130	140	150	160	170	180	190	200	210	220	240
0.20	1/8	450	80	90	100	110	120	130	140	150	160	170	180	190	200	210	220	240
0.25	1/8	360	80	90	100	110	120	130	140	150	160	170	180	190	200	210	220	240
0.30	1/8	300	80	90	100	110	120	130	140	150	160	170	180	190	200	210	220	240
0.40	1/8	225	80	90	100	110	120	130	140	150	160	170	180	190	200	210	220	240
0.50	1/8	180	80	90	100	110	120	130	140	150	160	170	180	190	200	210	220	240
0.60	1/8	150	80	90	100	110	120	130	140	150	164	179	189	199	210	121	232	252
0.70	1/8	135	82	95	105	117	127	127	142	158	182	193	204	114	225	237	249	270
0.75	1/8	135	90	101	112	123	135	146	158	170	193	205	217	230	242	253	265	299
0.80	1/8	135	98	109	122	133	145	157	169	181	217	230	243	257	270	285	297	325
0.90	1/8	135	108	122	136	148	163	175	170	203	240	255	270	285	300	315	330	360
1.00	1/8	135	120	135	150	165	180	195	210	225	160	170	180	190	200	210	220	240

TRAILER-MOUNTED (TANKLESS) ASPHALT DISTRIBUTOR

3-20. A trailer-mounted asphalt distributor (*Figure 3-5*) is used as a stationary pump to transfer liquid bitumen from an asphalt melter to the storage tanks in a dedrumming setup. It can also be equipped with a spray bar, towed along the project, supplied with an outside source of asphalt, and used to apply asphalt at a uniform rate over a surface. For more information on a trailer-mounted asphalt distributor, see *TM 5-3895-364-14*.

ASPHALT FINISHER

3-21. The model 780T asphalt finisher *(Figure 3-6*) is used to lay hot and cold bituminous mixtures into a smooth mat. The mat width varies from 6 feet (using bolt-on cutoff shoes) to 16 feet (with bolt-on screed and auger extensions). The model 780T can pave a maximum depth of 8 inches at a maximum speed of 135 feet per minute. It has a moveable control console that provides the operator with fingertip command of the machine's functions. An asphalt finisher moves outward from the conveyors and distributes the mixture evenly to the screed.

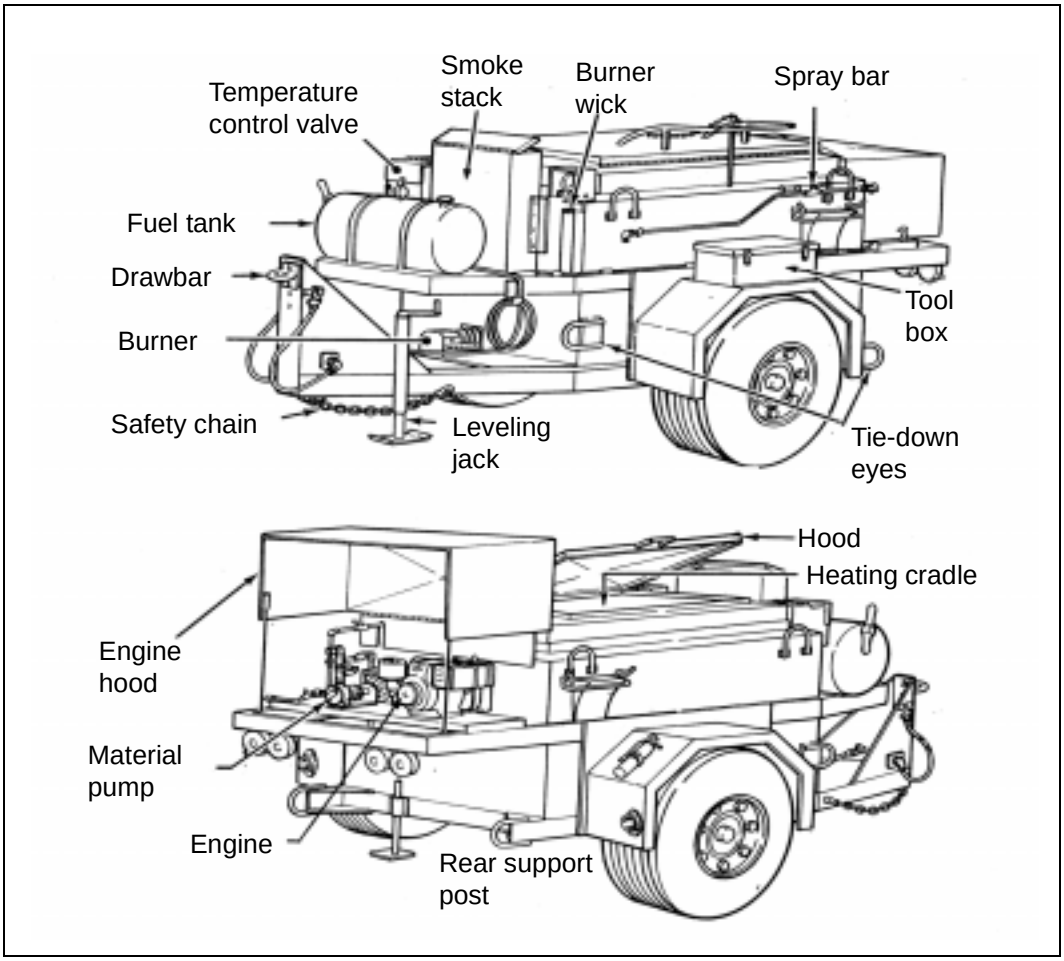

Figure 3-5. Trailer-Mounted Asphalt Distributor

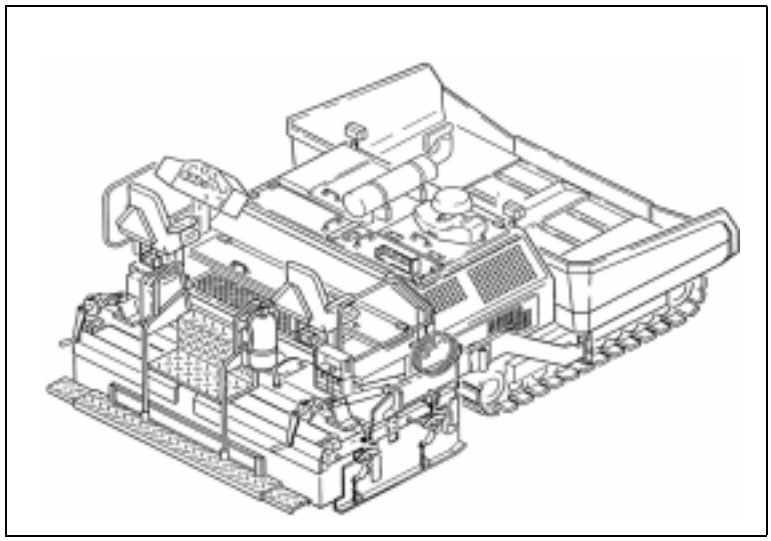

Figure 3-6. Model 780T Asphalt Finisher

3-22. Reversing the direction of the conveyors empties the hopper toward the front of the paving machine. The weight and vibration of the main screed provide initial compaction of the mat. The screed is equipped with four hydraulic vibrators to provide initial compaction, and the main and extension screeds are equipped with burner/blower pairs. Each pair operates together to increase the temperature of the screed plates to 300°F. Mat thickness is controlled by adjusting two screws or the tow-point movement switch (hydraulic cylinders). The screed can be adjusted to produce a crowned mat, and the finisher is powered by a diesel engine. See *TM 5-3895-373-10* for further information on the model 780T asphalt finisher.

COMPACTORS

3-23. A number of roller types are being used for paving operations. Rollers used to compact bituminous mixtures are static steel-wheel, vibratory steel-wheel, and rubber-tired rollers. Rollers should normally be operated 3 to 5 miles per hour (mph) (fast walking speed). Do not make quick turns on freshly laid mixtures.

STATIC STEEL-WHEEL ROLLERS

3-24. There are three versions of static steel-wheel rollers—two-wheel tandem, three-wheel tandem, and three-wheel tricycle. Static steel-wheel rollers (*Figure 3-7*) are generally used for breakdown and finish rolling. They leave a smooth finish on the pavement surface, but excessive rolling may result in lateral movement of the mixture causing surface cracks and density loss. They should be equipped with a system for watering the drums and should have scrapers to remove any material that sticks to the drums.

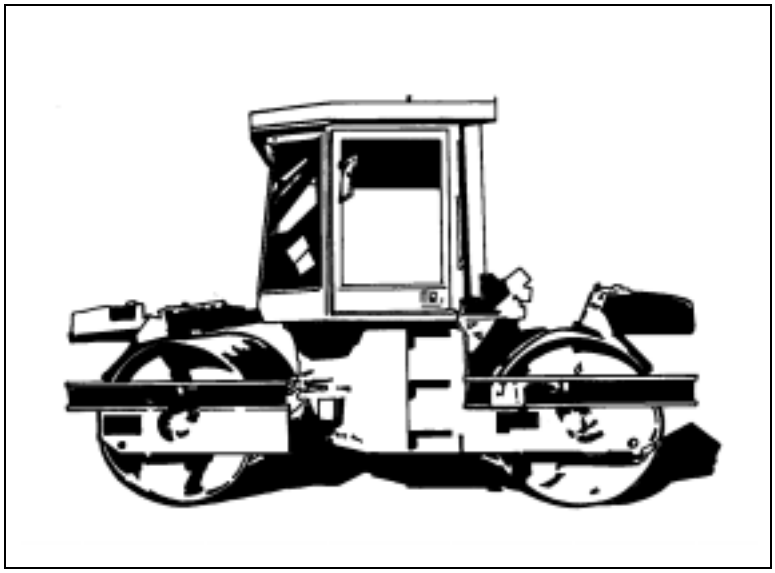

Figure 3-7. Static or Vibratory Roller

VIBRATORY STEEL-WHEEL ROLLERS

3-25. Vibratory steel-wheel rollers are commonly used to compact bituminous mixtures. They may consist of dual-drum vibration, single-drum vibration, and single-drum static or single-drum vibration and rubber tires on the rear axle. Vibratory steel-wheel rollers can be used for breakdown, intermediate, and finish rolling. Breakdown and intermediate rolling are performed in the vibratory mode, and finish rolling is performed in the static mode. Although a vibratory roller is used for intermediate rolling, it does not replace a rubber-tired roller. A vibratory roller should have a watering system on steel drums and rubber tires (if applicable) along with scrapers on the steel drums and scrapers and pads on the rubber tires.

RUBBER-TIRED ROLLERS

3-26. Rubber-tired rollers (*Figure 3-8*) are used for intermediate rolling of bituminous mixtures. They increase compaction after breakdown rolling and produce a watertight surface. A large rubber-tired roller (maximum load is 4,500 pounds per tire and minimum tire inflation pressure is 90 psi) should be available for construction of heavy-duty pavements on roads or airfields. A rubber-tired roller should have a watering system for the tires and should have scrapers and pads to prevent accumulation of materials on the tires. A large rubber-tired roller should be used to compact all heavy-duty bituminous concrete pavements.

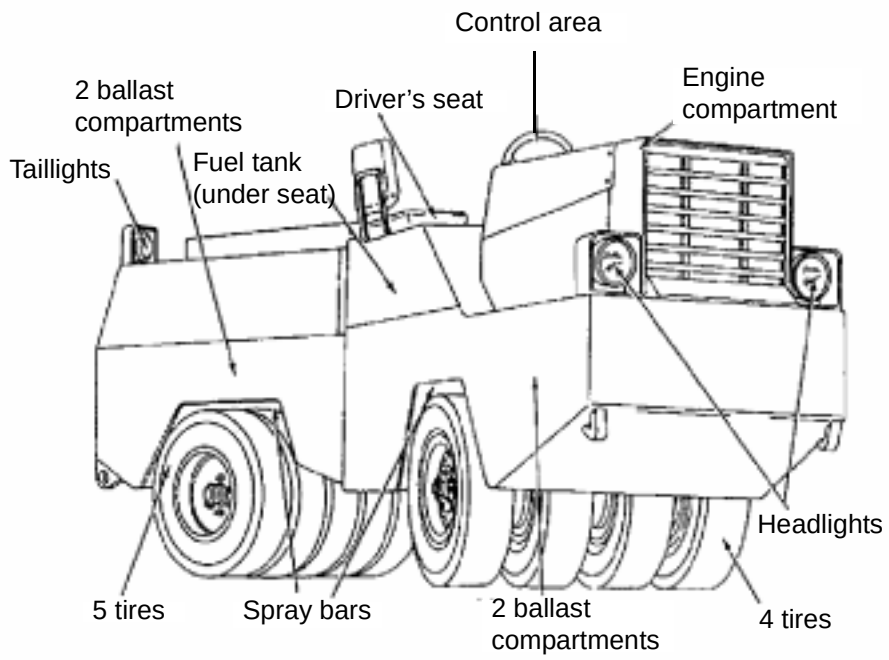

Figure 3-8. Pneumatic, 9-Tire Roller

OTHER COMPACTION DEVICES

3-27. Expedient hand tampers can be constructed to compact patches and small, inaccessible areas. Vibratory and combination rollers are generally used on civilian projects.

MOTOR GRADER

3-28. A motor grader (*Figure 3-9*) has many uses in road and airfield construction. It can be used to spread cold plant mixes and road mixes in lieu of an asphalt finisher; but controlling a grader is difficult, so hand-raking may be necessary. A grader can be used to windrow, mix, and spread road mixes with acceptable results. A grader is the best type of equipment for manipulating and air-drying road mixes. See *FM 5-434* for further information on motor graders.

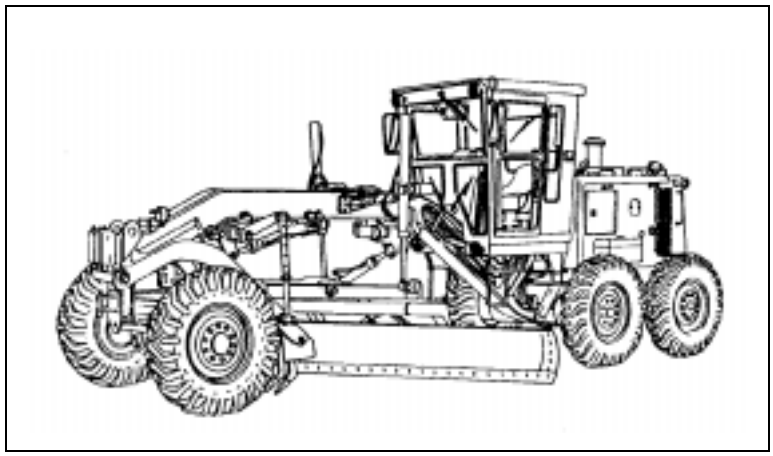

Figure 3-9. Motor Grader

HAND TOOLS

3-29. The following hand tools are commonly used in paving operations:

- **Rakes and shovels.** They are used to spread bituminous mixes in patch areas and small, inaccessible areas; control material flow into the paver hopper; and correct small surface irregularities. Heat rakes and shovels before using them, and clean them immediately after use.
- **Wooden blocks.** They hold up the floating screed at the beginning of a paving operation until it moves far enough forward to be supported by the mix *(Figure 3-10*).
- **Straightedges.** They are long, rigid devices used to check surface irregularities *(Figure 3-11*). Commercial varieties are metal and 10 to 16 feet long; expedient models are made of wood. Good results can be achieved from two straight, 10- to 16-foot, 2- by 4-inch boards nailed or bolted together with a thin spacer in between. Although an expedient straightedge is bulky, do not use smaller boards because they do not provide enough rigidness. Overlapping straightedge checks by at least 50 percent eliminates false readings.

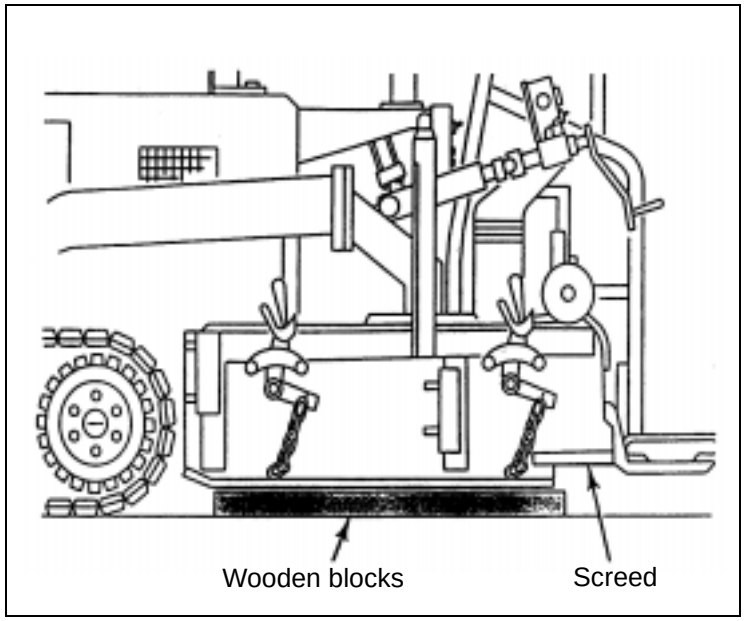

Figure 3-10. Blocks Supporting a Paving Screed

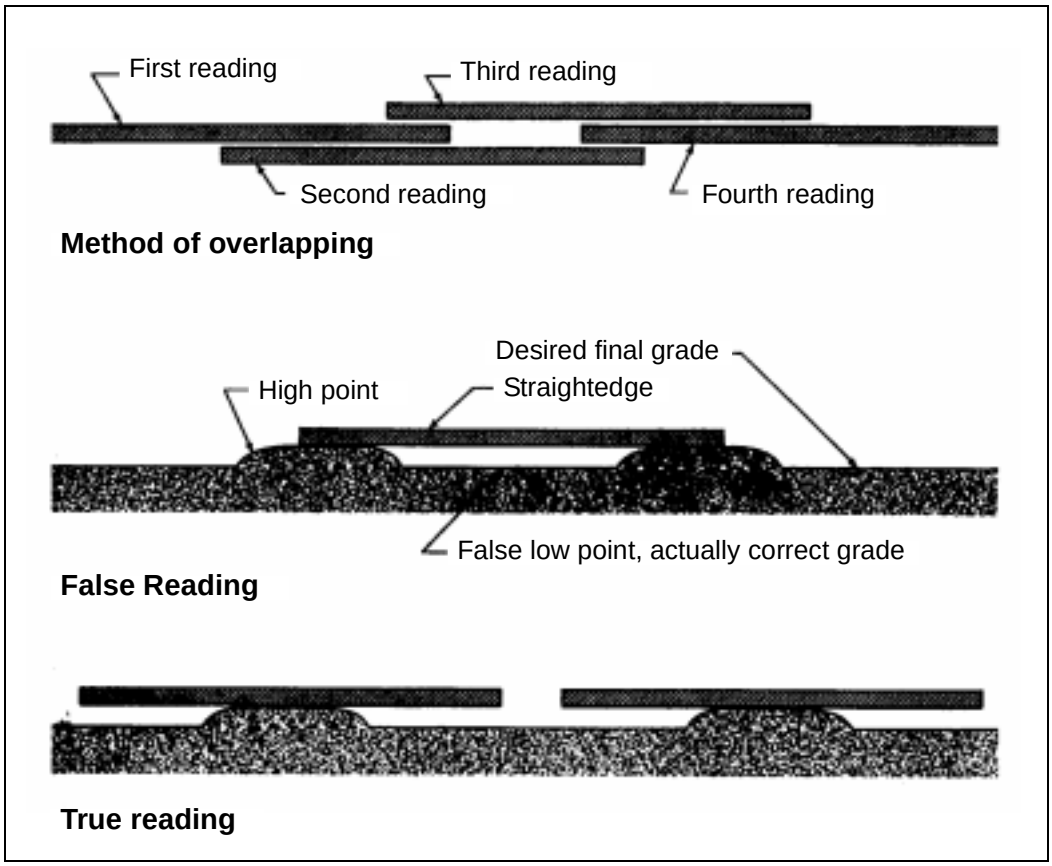

Figure 3-11. Using a Straightedge

3-30. Tools are commonly cleaned by burning off the bitumen. Be very careful when cleaning tools in this manner because the flames are not always visible. Always ensure that a proper fire extinguisher is readily available.

AGGREGATE SPREADERS

3-31. A typical hopper-type aggregate spreader (*Figure 3-12*) can handle aggregate ranging from sand to 1 1/2-inch gravel. The rate and depth of application depends on the gate opening, and the width of the spread varies from 4 to 8 feet in 1-foot increments. Depending on the manufacturer, a spreader has two or four traction wheels. The spreader hooks on the rear of a 5- or 20-ton dump truck with a hitch adapter. During operation, the truck backs up, which allows aggregate to be spread ahead of the truck tires, preventing the pickup of bitumen. Never stand on the aggregate in the truck or the spreader. See *TM 5-3895-330-10* for further information on aggregate spreaders and their operation.

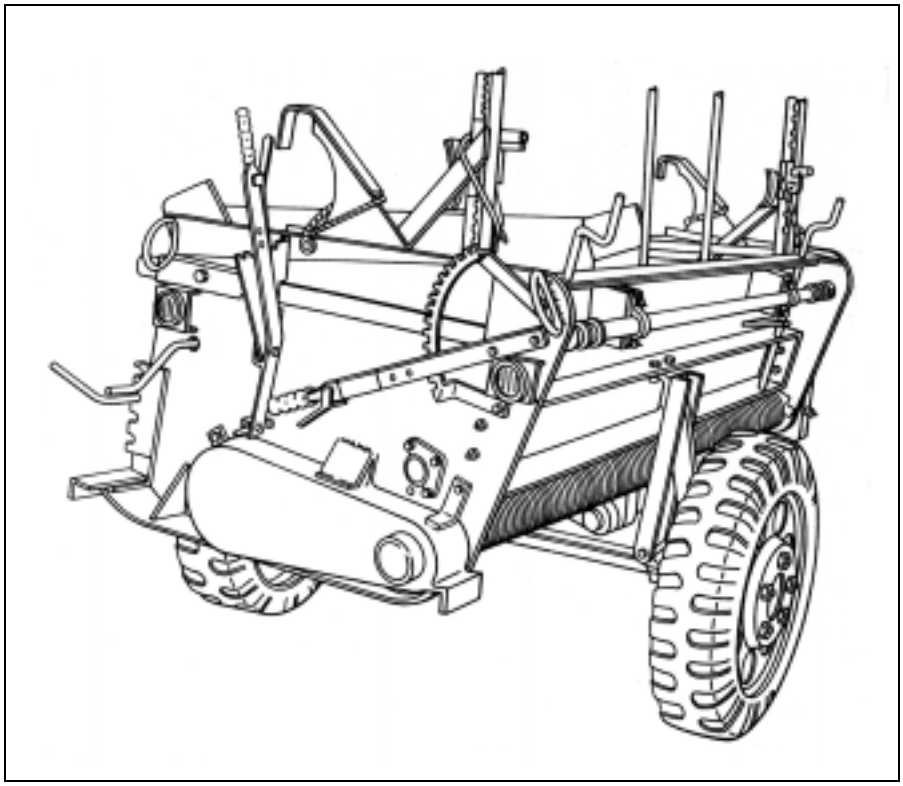

Figure 3-12. Aggregate Spreader

3-32. The following are types of nonstandard aggregate spreaders:

- **Whirl.** This spreader is essentially a large disk that fits on the rear of a dump truck. The disk is parallel to the ground and slings the aggregate in a circle as it rotates.
- **Self-propelled.** This spreader is similar to an asphalt finisher. A hopper in the rear receives aggregate from a dump truck; and a

conveyor transports the aggregate through the machine to the front, where augers distribute the material. The aggregate goes through an adjustable screen, which drops large aggregate first and covers it with fine material. A self-propelled spreader provides the greatest degree of control and the least amount of segregation of any aggregate spreader.

SURFACE-TREATMENT COMBINE

3-33. A surface-treatment combine is a combination aggregate spreader and bituminous distributor. A fairly recent development, it has a row of spray bars behind the front wheels. An aggregate spreader, which is similar to the self-propelled type, is located between the spray bars and the rear wheels. Civilians currently use the combine on a limited basis.

Chapter 4

Production and Laydown of Bituminous Materials

The efforts and skills of a military engineer supervisor are used to the fullest extent during the production and laydown of bituminous materials. His knowledge and surveillance of paving operations can mean the difference between a durable, smooth-riding pavement and a rough, unsound pavement. An engineer supervisor has two primary responsibilities during paving operations—ensuring that the project's specifications are met and providing the equipment operator or ground crew every opportunity to meet the job specifications in the most cost-effective way. Therefore, the supervisor must be familiar with the equipment used during the operation. Since communication is essential for a successful operation, allowing all working parties to participate in a construction meeting before starting an operation minimizes confusion and friction after the operation starts.

SECTION I - FUNDAMENTALS

CONSTRUCTION

4-1. A bituminous pavement (wearing surface) is a compacted mass of bituminous material and aggregate. It can be constructed in one or more layers, and each layer is usually 1 or more inches thick. Laying a thicker pavement in smaller lifts allows better compaction and greater densities in the pavement mat. The layers distribute the load over the base through the interlocking action of the aggregate, and bituminous pavements depend on the base for their load-carrying capacity. A pavement should be constructed over suitable base and subbase courses that are not subjected to excessive settling or deformation. The three types of pavement most widely used in TO areas are—

- Penetration macadam.
- Road mix (mixed in place).
- Plant mix (hot mix, hot laid, cold mix, cold laid).

4-2. This chapter discusses prime and tack coats, surface treatments, and production and laydown of bituminous pavements. *Chapter 5* discusses storing and dedrumming bituminous material and the procedures for the field manufacture of asphalt cutback.

HANDLING AND STOCKPILING AGGREGATE

4-3. Aggregate is transported in trucks from the pit where it is produced and screened to a convenient location near the construction site. (*TM 5-332* addresses the issue of processing aggregate from pits and quarries.) Aggregate is usually stockpiled at the pit and construction site to prevent shortages during an operation. Large stockpiles are usually rectangular with a flat top to ease computation of volumes and built-in layers, to retain uniformity of gradation, and to avoid segregation.

4-4. Maintain separate stockpiles for each aggregate. Aggregate may separate if it is dumped into piles with long, sloping sides. The larger particles may fall down the slope, and the smaller particles will be left near the top of the stockpile. Deposit aggregate in layers that are about 3 feet thick. To minimize segregation, place a truck ramp at one end of the pile so that trucks can back up the ramp and dump aggregate over the top area of the stockpile or use a clamshell bucket without teeth to build up the stockpile. Time limitations may prevent the use of ramps in the TO; therefore, aggregate may be deposited at ground level directly from the trucks.

TRAFFIC PROBLEMS

4-5. When a bituminous operation is planned for roads with traffic, use the following precautions:

- Place SLOW signs or other warning devices 100 yards and 20 yards from each entrance to the project.
- Ensure that flagmen wear safety vests or other conspicuous attire.
- Use a small vehicle as a pilot (lead) truck to help control traffic. It helps keep traffic off freshly prepared surfaces and limits travel to a moderate speed when passing the operation.
- Advise flagmen to organize traffic in convoys for the pilot truck. The driver of the last vehicle in the convoy passes an object, such as a red flag, to the flagman on the far end to indicate that all the traffic in the convoy has passed.

4-6. An airfield will probably have to remain operational during bituminous operations. A preconstruction conference should be held with the airfield safety officer. Discussion areas should include the construction schedule, the equipment routing, and the maximum height of the equipment needed in the operation. Liaison with the air-traffic control office must be established if trucks and other equipment are to cross the runways that are in use.

SECTION II - PRIME AND TACK COATS

PRIME COAT

4-7. Priming operations should be planned so that there is always an adequate amount of cured prime base ahead of the surfacing operations, but not so far ahead that the base becomes dirty. Apply a prime coat, consisting of a low-viscosity liquid bituminous material, to the base before placing a bituminous wearing surface. The prime coat—

- Penetrates the base about 0.25 inch and fills the voids.
- Acts as a waterproof barrier to prevent moisture from penetrating the wearing surface and reaching the base.
- Binds the particles of the base together and bonds the base to the wearing surface.

BASE PREPARATION

4-8. Ensure that the base is well-graded, shaped to the desired cross section, compacted to a specified density, well-drained, clean, and free of excessive moisture but not completely dry. Broom the surface of the base if it contains an appreciable amount of loose material (fine or coarse) or if it is excessively dusty. If the base is not broomed, apply a prime coat and lightly roll it with a pneumatic roller.

4-9. The base can be sprinkled with water, although it is not preferred. If sprinkling is necessary, however, apply water lightly at a rate of about 0.2 to 0.3 gallon per square yard, depending on the condition of the base, the temperature, and the humidity. Completely cover the base with the minimum amount of water and let it dry or nearly dry before applying the prime coat. If the base is too wet, it will not take the prime properly.

4-10. Moisture tends to come out, especially in hot weather, and strip the prime from the base during construction. Rain also tends to strip the prime from a base that was too wet when primed. Heavy rains may strip a properly primed base to some extent, but the tendency will not be so great as on an improperly cured base. In general, the lowest acceptable moisture content for the upper portion of the base course before priming should not exceed one-half of the optimum moisture content. On the contrary, if the base dries out completely, cracks may develop and a heavy rain could cause swelling and density loss. For information on subgrade, subbase, and base preparation, see *FM 5-430-00-1*.

MATERIALS

4-11. *Table 2-2*, page 2-4, lists bituminous materials used for prime coats. Specific materials used depend on the condition of the soil base and the climate. Consider the following:

- In moderate and warm climates, use MC-70.

- In cold climates, use RS asphalt cutbacks such as RC-70 or RC-250.
- In very cold climates, eliminate the prime coat because the curing process may be extremely slow.
- On densely graded base courses, use MC-30.
- On loosely bonded, fine-grained soils, such as well-graded sand, use MC-70 or SC-70.
- On coarse-grained sandy soils, use MC-250 or SC-250.

APPLICATION

4-12. *Figure 4-1* shows the application sequence for a prime coat applied with a bituminous distributor, and *Table 2-1*, page 2-2, lists the characteristics of bitumens. Adjust the application rate according to the porosity (density) of the base, the atmospheric temperature, and the temperature and grade of the bituminous material.

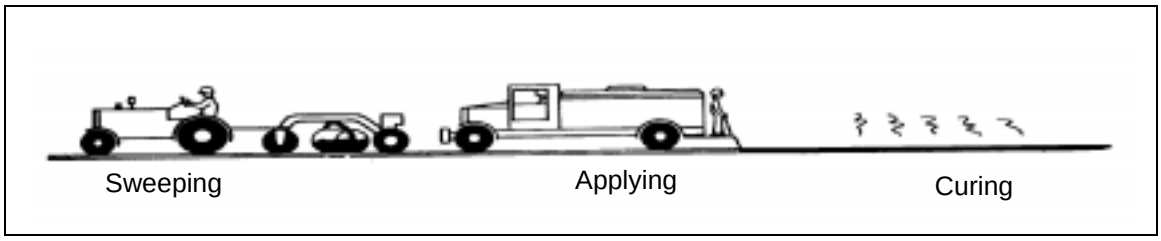

Figure 4-1. Prime-Coat Application Sequence

4-13. Use the thinnest possible application that will effectively coat the base. To waterproof the base, extend the prime coat at least 1 foot beyond the edge of the surface on each side to ensure complete coverage. If the base course has a low plastic index (PI), extend the prime coat far enough to include the shoulders. In general, vary the application rate between 0.2 and 0.5 gallon per square yard.

4-14. Soils with several voids require a higher rate of application than dense soils. For example, uniform, open-graded sand may require 0.4 gallon per square yard to fill the voids; whereas, a tightly bonded, fine-grained soil may require about 0.2 gallon per square yard. To establish the application rate, conduct trial runs on a test strip. Adjust the application rate if it does not provide the desired quantity per square yard.

4-15. Use the application chart that comes with the distributor to get the speed of the distributor and the discharge rate for the conditions. Adjust the distributor, as necessary, while applying the prime coat. Always observe safety precautions when using bituminous materials.

4-16. If the base absorbs all of the prime material within 1 to 3 hours or if penetration is too shallow, the base is underprimed. Apply a second coating of the prime material to correct this problem.

4-17. Overpriming is more undesirable than underpriming. An overprimed base may fail to cure and can contribute to pavement failure. A free film of prime material remaining on the base after a 48-hour curing period indicates that the base is overprimed. Correct this condition by spreading a light,

uniform layer of clean, dry sand over the prime coat to absorb the excess material. After applying the sand, lightly roll and broom the surface. Correct excess prime that is held in minor depressions by applying clean, dry sand. Lightly broom loose sand away before laying the wearing surface.

CURING PERIOD

4-18. Ensure that the prime is adequately cured before laying the surface course. In general, allow a minimum of 48 hours for complete curing. A proper surface condition is slightly brown instead of shiny black.

PROTECTION

4-19. Set up barricades around the soil base before covering it with a bituminous wearing surface. This prevents traffic from carrying dust or mud onto the surface before and after it is primed. If the primed base course must be open to traffic before it has completely cured, spread light sand over the surface to absorb the excess material.

TACK COAT

4-20. A tack coat is bituminous material that is sprayed onto an existing wearing surface (concrete, brick, bituminous material, or binder course) before the bituminous pavement is placed. A tack coat provides a bond between the existing pavement and the new surface and becomes tacky within a few hours. A tack coat is not required on a primed base unless the prime coat has completely cured and is coated with dust. The application sequence for a tack coat is the same as for a prime coat (see *Figure 4-1*).

MATERIALS

4-21. See *Table 2-1*, page 2-2, for the bituminous materials to use for tack coats. RC cutbacks, RS emulsions, and medium ACs are normally suitable for a tack coat. RC-250 or RC-800 is most satisfactory because either become tacky quickly. Because RC cutbacks are highly flammable, follow the safety precautions prescribed for handling bituminous materials. Emulsions can be used in warm weather. If facilities are available, 200-300 penetration AC can be used with excellent results.

APPLICATION

4-22. Sweep the existing surface clean so that the tack coat can adhere to it. Apply the tack coat with a bituminous distributor at the temperatures prescribed for spraying. Unlike a prime coat, a tack coat can only be applied over the width of the existing surface. The application rate varies between 0.05 and 0.25 gallon per square yard. On a smooth, dense surface, a minimum rate of 0.05 gallon per square yard should produce a satisfactory bond. If the surface is worn, rough, or cracked, use a maximum rate of 0.25 gallon per square yard. An extremely heavy tack coat may absorb into the surface mixture and cause bleeding, flushing, and stability loss. Roll the surface lightly with a rubber-tired roller or truck tires for uniform distribution of bituminous materials.

CURING PERIOD

4-23. Ensure that the tack coat is completely cured (normally takes a few hours) before laying the surface course. A properly cured surface will feel tacky to the touch; further curing is required if the cutback or emulsion comes off easily under light finger pressure. If the wearing surface is laid before the tack coat becomes tacky, the volatile substances may act as lubricants and prevent bonding. If the tack coat hardens, the heat from a hot bituminous mix or the cutter stock in the asphalt cutback will usually soften the tack coat enough for a bond to develop between the old and new surfaces. Dust must be broomed from the tack coat before it will bond with the wearing surface.

PROTECTION

4-24. Set up barricades around the area to be covered with a bituminous wearing surface. This prevents traffic from carrying dust or mud onto the surface before or after the tack coat is applied. If the surface must be open for traffic, open only one lane. Apply the tack coat, pave, prime, and sand the unused lane. Open the freshly paved lane to traffic and pave the remaining lane. Sweep and reprime the first lane after completing the second lane.

SECTION III - SURFACE TREATMENT

SINGLE SURFACE TREATMENT

4-25. A single surface treatment usually consists of a sprayed application of bituminous material and aggregate that is less than 1 inch thick. A surface treatment may also be called a seal coat, an armor coat, or a carpet coat. Surface treatments—

- Serve as abrasive, weather-resisting mediums that waterproof the base.
- Are not as durable as bituminous concrete and may require constant maintenance.
- Are particularly suitable for surfacing aged or worn bituminous pavements that are dry, raveled, or beginning to crack.
- Should possess a surface texture that does not require surface treatment to fill the voids if they are new, well-designed, and well-constructed.
- Are used largely on roads.
- May be used as expedient measures for airfields, although it is not recommended.
- Are particularly suitable for TO construction because they may be laid quickly with minimum materials and equipment, constructed in multiple layers with little interference to traffic, and used as the first step in stage construction.
- Will not withstand the action of steel-wheel vehicles, tracked vehicles, or nonskid chains on vehicle wheels.
- Should not be laid when the temperature is below 50°F.

4-26. The three requirements for a surface treatment are as follows:

- The quantity of bituminous material must be sufficient to hold the aggregate without submerging it.
- Sufficient aggregate must be used to cover the bituminous material.
- The base course must be strong enough to support the anticipated traffic load.

4-27. A single surface treatment consists of an application of bituminous material that is covered with mineral aggregate and rolled to a smooth, even-textured surface. *Figure 4-2* shows the sequence of operations for a single surface treatment.

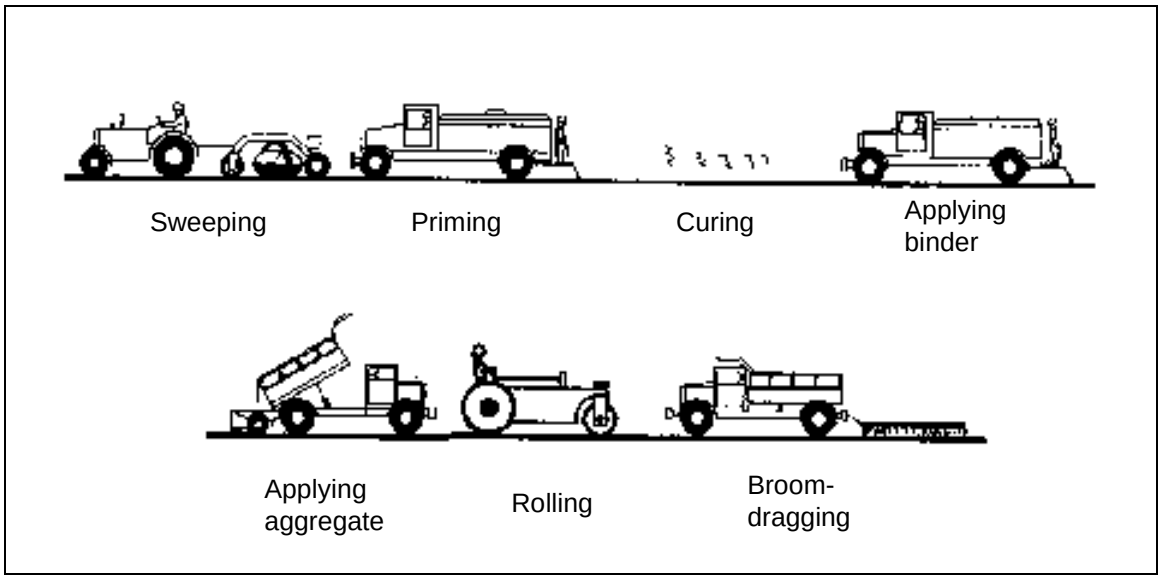

Figure 4-2. Single Surface Treatment

AGGREGATE

4-28. Use uniformly graded sand, crushed stone, gravel, or slag for surface treatments. The surface treatment determines the size of aggregate to select. For example, to seal a smooth, existing surface, use coarse sand; for a badly broken surface, use 1/2-inch aggregate (maximum). The minimum size aggregate used should pass a number 4 sieve. *Table 2-1*, page 2-2, shows the gradation specification limits for surface treatments.

4-29. Spread aggregate immediately after applying bituminous material and while it is still fluid. Use an adjustable, mechanical aggregate spreader (*Figure 4-3*, page 4-8) or spread the aggregate from trucks or by hand. If trucks are used, operate them backward so that their wheels move over the bituminous material that has already been covered with aggregate. If hand-spreading, dump the aggregate in piles adjacent to the areas to be treated and then spread it. If aggregate is spread unevenly, drag-broom the surface to ensure complete, uniform coverage of the bituminous material and a smooth, even surface.

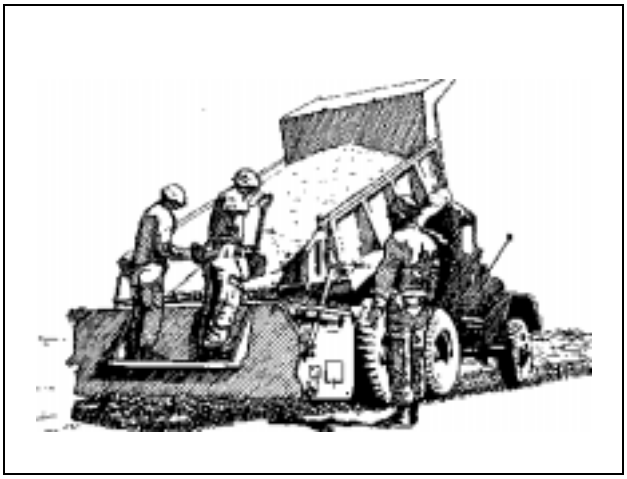

Figure 4-3. Hopper-Type Aggregate Spreader

BITUMINOUS MATERIAL

4-30. As shown in *Table 2-2*, page 2-4, RC cutbacks, MC cutbacks, RS emulsions, and AC can be used for surface treatments. RC cutbacks are most widely used because they evaporate rapidly, and the road can be opened to traffic almost immediately after applying them. The viscosity grade of bituminous material depends on the size of the aggregate used as cover stone. Larger particles of aggregate require bituminous material of higher viscosity so that they will hold the aggregate. For example, RC-70 or RC-250 can be used with coarse sand for a surface treatment to seal cracks in an otherwise satisfactory surface. For resurfacing a badly cracked or rough surface, use RC-800 or RC-3,000 with 3/4-inch aggregate.

4-31. Surface treatments are usually applied to a thoroughly compacted, primed base that has been swept clean. The existing surface or base course must be dry or contain minimal moisture that permits satisfactory bonding of the surface treatment to the base, and the atmospheric temperature should be above 50°F. To ensure uniform distribution, apply bituminous material with a bituminous distributor. The quantity of material required is based on the average particle size of the cover stone as shown in *Table 4-1*.

Table 4-1. Material Requirements for a Single Surface Treatment

Material	Unit of Measurement	Gradation Designation						
		No. 24A	No. 24B	No. 25A	No. 25B	No. 26A	No. 27B	No. 27C
Aggregate	Pounds per square yard	35-45	35-45	25-35	25-35	15-25	10-15	10-20
Bitumen	Gallons per square yard	0.35-0.45	0.35-0.45	0.25-0.35	0.25-0.35	0.15-0.25	0.15-0.25	0.1-0.2

4-32. The amount of bituminous material must be sufficient to hold the aggregate in place without leaving a sticky surface. The aggregate must not be completely submerged in the bituminous material. The viscosity used depends on the size of the cover stone; the larger the cover stone, the higher (or thicker)

the viscosity of the bituminous material. Submerge 1/4-inch aggregate about 30 percent; 3/8-inch aggregate, 32 percent; 1/2-inch aggregate, 35 percent; and 3/4-inch aggregate, 43 percent. Use about 1 gallon of bituminous material per 100 pounds of aggregate.

Example: Determine the recommended application rate of bituminous material, in gallons per square yard, if 30 pounds of aggregate are required to cover a 1-square-yard area.

Solution:

$$\text{Application Rate} = 30\ \text{lb/sq yd} \times \frac{1\ \text{gal}}{100\ \text{lb}} = 0.3\ \text{gal/sq yd}$$

ROLLING

4-33. Roll the surface with a 5- to 8-ton roller while drag-brooming. Using a heavier roller could crush the aggregate rather than embed it into the bituminous material, and crushed particles change the selected gradation of the aggregate. When rolling—

- Roll parallel to the centerline of the roadway to reduce the number of times the roller changes direction.
- Overlap succeeding passes one-half the roller's wheel width to ensure complete coverage.
- Complete rolling operations before the bituminous material hardens to ensure that the aggregate is well embedded in the bituminous material.
- Make succeeding passes from the low side to the high side of the surface to maintain a surface crown and prevent feathering at the edges.
- Conduct rolling operations at a slow speed.
- Ensure that rollers are wet to prevent bituminous material from sticking to the wheels.

FINAL SWEEPING

4-34. After rolling and curing, the surface treatment is ready for traffic. If the surface treatment is used on an airfield, sweep excess aggregate from the surface to avoid damaging the aircraft. Although not essential, road surfaces should also be swept.

MULTIPLE SURFACE TREATMENT

4-35. When a tougher, more resistant surface is desired than that obtained with a single surface treatment, use a multiple surface treatment. This type of treatment involves two or more successive layers of single surface treatments. Use smaller particles of aggregate and less bituminous material for each successive layer. Although multiple surface treatments are usually more than 1 inch thick, they are still considered surface treatments because each layer is usually less than 1 inch thick and the total surface treatment does not add

appreciably to the load-carrying capacity of the base. Use the following guidelines for a multiple surface treatment:

- **First layer.** Lay this layer the same as a single surface treatment. Sweep away loose aggregate so that subsequent layers will bond together.
- **Second layer.** Reduce the amount of bituminous material by one-third or one-half of the first layer. The aggregate used should be about one-half the diameter of that used in the first application. See *Table 4-2* for the size of aggregate and the amount of bituminous material to use.
- **Final layer.** Drag-boom the final layer, if necessary, so that an even layer of aggregate remains. Roll the surface with a 5- to 8-ton roller so that the aggregate will embed in the bituminous material. After the surface is rolled and cured, it is ready for traffic. If the multiple surface treatment is on an airfield, sweep away loose aggregate to avoid damaging aircraft. Although not essential, road surfaces should also be swept.

Table 4-2. Material Requirements for a Multiple Surface Treatment

Gradation	First Layer		Second Layer	
	Bitumen (Gallons per Square Yard)	Aggregate (Pounds per Square Yard)	Bitumen (Gallons per Square Yard)	Aggregate (Pounds per Square Yard)
No. 23A	0.45-0.55	45-55	—	—
No. 25A	—	—	0.2-0.3	15-25
No. 24A	0.4-0.5	40-50	—	—
No. 26A			0.2-0.3	15-25
No. 25A	0.35-0.5	35-45	—	—
No. 27A	—	—	0.2-0.3	15-25

DUST PALLIATIVE

4-36. Apply a bituminous dust palliative to prevent a soil wearing surface from becoming excessively dusty. Ensure that the bituminous material is thin enough to soak into the surface. The material must retain fluidity indefinitely so that dust particles raised by traffic will become coated with bituminous material. Use MC-70 or SC-70 cutback as a dust palliative.

SECTION IV - PENETRATION MACADAM

CONCEPT

4-37. A penetration macadam—

- Consists of crushed stone or slag that is bonded with bituminous materials by the penetration method and constructed on a previously prepared base or subbase course.

- Is used as a wearing surface for a road or as a binder or base course in the stage construction of a road or an airfield.
- May be used as a surface course on overrun areas of an airfield that are not subject to blast.
- Is particularly suitable for use in a remote locality or for a small paving area.

4-38. Construction of a penetration macadam is rapid and uses minimal equipment. Because the construction method cannot be accurately controlled, the finished surface is less dense than the surface of a plant-mix pavement. Loose aggregate may be a hazard to traffic, particularly on airfields.

MATERIALS

4-39. *Table 2-2*, page 2-4, lists the bituminous materials used for penetration-macadam wearing surfaces. Emulsions are sometimes used for penetration-macadam base courses. The three sizes of aggregate used in constructing a penetration macadam are—

- Macadam aggregate (coarse).
- Uniformly graded keystone (intermediate).
- Uniformly graded FA or choke stone (stone chips or clean, coarse sand).

4-40. CA and keystone should consist of clean, tough, durable particles or fragments of stone or crushed slag. *Table 2-1*, page 2-2, lists the recommended gradations for penetration-macadam wearing surfaces.

CONSTRUCTION

4-41. Construct a penetration-macadam surface course on a dry base course. Ensure that the aggregate is dry, the atmospheric temperature is about 60°F, and the weather is not foggy or rainy. Use the following procedures (see *Figure 4-4*, page 4-12) to construct the surface course:

- Inspect the base and recondition it as necessary.
- Prime the base if waterproofing or consolidation of the base top is necessary. Use a tack coat when placing a penetration-macadam base course over an existing pavement.
- Spread the macadam aggregate.
- Roll the surface.
- Apply the first layer of bituminous material.
- Apply the keystone.
- Drag-broom and roll the surface.
- Apply the second layer of bituminous material.
- Apply choke stone.
- Drag-broom, roll, and hand-broom the surface.
- Apply a surface treatment when additional waterproofing is necessary.

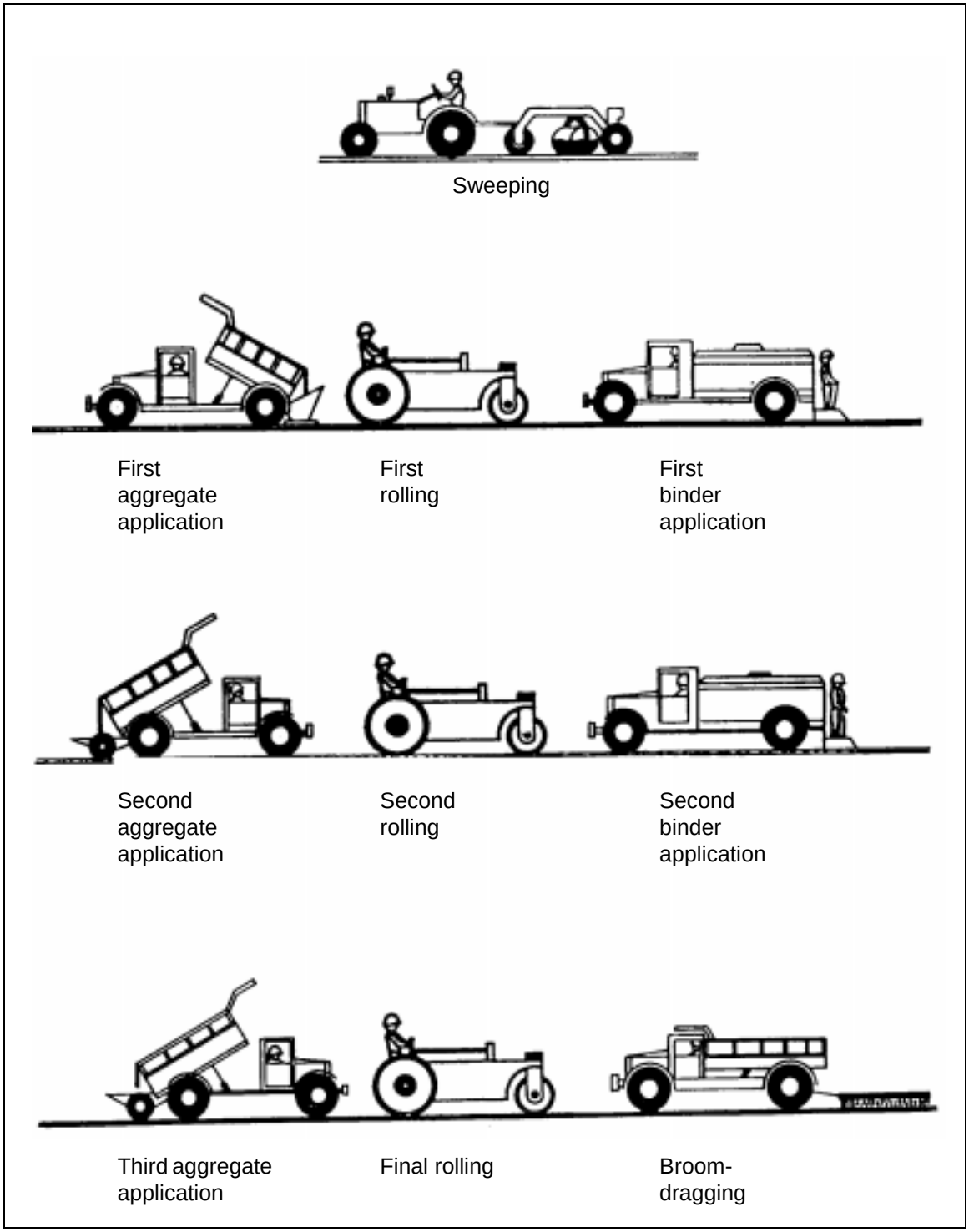

Figure 4-4. Procedures for Applying a Penetration-Macadam Surface Course

RECONDITION THE BASE COURSE

4-42. Inspect the base for discrepancies and defective areas. A penetration-macadam pavement must be built over a well-compacted, adequate base. Sweep away dust and debris from the base surface so that it will absorb the prime coat. Use a tack coat when constructing a penetration macadam on an existing pavement.

CONSTRUCT EDGES ON THE WEARING SURFACE

4-43. If the surface has no permanent edgings, curbs, or gutters, install side forms that are securely staked and backed with earth or other material before spreading the CA. Side forms—

- Can be made of wood or metal.
- Must be constructed so that they can be securely and rigidly fastened in place to the specified lines and grades.
- Should be sufficient in number and length to help control construction.
- Should be 10 to 12 feet long; however, 5-foot sections are acceptable on curves with a radius of 150 feet or less.
- Should be 1/4 inch shallower than the depth of the finished pavement.
- Should be backed with earth or other suitable materials on the berm side to a width of not less than 2 feet. When the material is thoroughly compacted, it should be about the same thickness as the compacted wearing course.

4-44. When constructing well-compacted shoulders of earth or other material before spreading the CA, ensure that—

- Shoulders are about 2 feet wide and have vertical faces that are equivalent to the depth of the wearing course.
- Material is free of sod, weeds, and other unsuitable matter.
- Shoulders are the full width and height of the surface so that they hold the course material in place while it is rolled and spread.

APPLY THE MACADAM AGGREGATE

4-45. Divide the road or runway into moderate-sized strips. Spread loose CA uniformly with improvised or standard stone spreaders, by hand, or with a modified bituminous finisher at a loose depth that will give the required compacted thickness. Use one strip as a test section to establish the required depth, which should be about 3 1/2 inches of loose aggregate for a compacted thickness of 2 1/2 inches.

4-46. Remove thin, flat, oversized aggregate that appears on the surface at any time during construction. Remove all areas of fine material and replace them with macadam aggregate before rolling. The maximum aggregate size should be about two-thirds the thickness of the compacted layer. If the aggregate is larger, the oversized particles may prevent proper compaction or they may be crushed by compacting equipment.

4-47. To compact and bond the macadam aggregate, dry-roll it with a 10-ton, three-wheel roller. Use the following procedures when rolling the surface:

- Roll from the sides to the center gradually. On superelevated curves, however, roll from the lower to the upper edge, parallel with the centerline of the lane and overlap the preceding track by one-half the track width. Continue this process until the aggregate does not creep or wave ahead of the roller.
- Cover equal portions of the spread aggregate and the shoulder with the outside wheel of the roller if permanent edgings are not present. Roll backward and forward until the shoulder is firmly compacted against the pavement edge.
- Tamp the aggregate thoroughly with mechanical or hand tampers along curbs, headers, walls, and other areas where a roller cannot be used.
- Remove crushed material that will prevent the bituminous material from penetrating the surface.
- Remove coated or dirty aggregate, replace it with clean material, and roll it before applying bituminous material.
- Correct irregularities that are greater than 3/8 inch from the specified lines and grades (determined by prior testing of the surface). Loosen and reshape the aggregate, remove or add aggregate, and reroll the areas. The compacted CA should present a firm, even surface that is true to the specified cross section and parallel to the finished grade. The texture should allow a uniform penetration of the bituminous material.

4-48. Remove the forms after compacting the CA and before applying the bituminous material. Fill the spaces with shoulder material and thoroughly compact the area.

TEST THE COURSE-AGGREGATE THICKNESS

4-49. After spreading and rolling the CA, test the depth before applying bituminous materials. The test generally involves digging three holes at 200-foot intervals (one test hole at the center and one at each quarter point). Correct deviations in excess of 3/8 inch by loosening the surface, removing or adding macadam aggregate, and rerolling the surface. To control thickness, place wooden blocks (equal in height to the desired thickness of the first course) on the base course at short intervals before spreading the aggregate.

APPLY THE FIRST LAYER OF BITUMINOUS MATERIAL

4-50. Apply a heavy layer of bituminous material to waterproof the macadam aggregate and hold it in place. Apply the bituminous material uniformly using a bituminous distributor. The application rate is about 0.75 gallon per square yard, per inch of compacted thickness for heavy traffic; for lighter vehicles, increase the rate to about 1.1 gallons per square yard. Apply the bituminous material only when the CA is dry throughout its entire depth and when the recommended spraying temperature has been reached (see *Chapter 2*).

4-51. If the distributor is not equipped to distribute bituminous material evenly at the junctions, spread building paper on the surface. Place the paper far enough back from the ends of each application so that starting and stopping is on the paper. Using paper also ensures that spraying operations treat the entire length of the surface. Remove the paper immediately after use and burn it. Use a narrow-spouted pouring pot or the hose attachment on a distributor to apply bituminous material on areas the distributor missed.

PROTECT THE AREA

4-52. When applying bituminous material, protect adjacent structures and trees from being spattered or marred by the material. Remove surplus bituminous material from the shoulders or blot it with fine sand before rolling so that the shoulder can be rolled with the wearing course.

APPLY THE KEYSTONE

4-53. After applying the first layer of bituminous material, spread clean, dry keystone according to the gradations in *Table 2-1*, page 2-2. Spread enough keystone to fill the surface voids of the CA. The size and number of voids to fill determine the aggregate size and the application rate. The normal rate is 25 to 35 pounds per square yard. Spread the keystone with an aggregate spreader on a truck moving backward or use shovels to spread it from stockpiles adjacent to the area to be treated. Spread aggregate ahead of the wheels on the spreader so that the bituminous material is covered before the wheels pass over it. Never dump aggregate on the area to be treated.

BROOM AND ROLL THE AGGREGATE

4-54. Spread the aggregate uniformly with push brooms or drag brooms. Start rolling the surface immediately after spreading and smoothing the keystone, while the bituminous material is still warm. Broom additional keystone in voids during the rolling process until all the surface voids are uniform, leaving the CA uncovered. Continue rolling until the course is firmly bound, is even, and shows no perceptible movement under the roller.

APPLY THE SECOND LAYER OF BITUMINOUS MATERIAL

4-55. After rolling the keystone, sweep loose keystone off the surface. Apply a second layer of bituminous material. The choke stone determines the rate of application, which is usually 0.8 to 1 gallon per 100 pounds of aggregate. As the estimated traffic increases, the rate decreases.

APPLY THE CHOKE STONE

4-56. After applying the second layer of bituminous material, apply a layer of clean, dry choke stone. Retain a portion of the choke stone to add during the brooming and rolling process as needed and broom and roll as discussed above. Continue this process until all surface voids in the CA are filled and the surface is uniform in texture, is thoroughly bonded, and shows no perceptible movement under the roller. A tandem roller can be used for the first rolling, but do not exceed 3 mph because faster rolling can cause waves that are difficult or impossible to remove.

APPLY THE SURFACE TREATMENT

4-57. If the pavement is a final wearing surface, use a single surface treatment to provide a smooth, waterproof surface. RC bituminous material is normally used, and the grade depends on the surface and the weather conditions. The application rate is about 1 gallon of bituminous material for 100 pounds of aggregate. To complete the surface treatment, spread a one-stone thickness of cover stone over the bituminous material. Drag-broom and roll the surface with a 5- to 8-ton roller. For a more durable surface, place a 1-inch layer of hot mix instead of a surface treatment over the penetration macadam. Ensure that the final surface is true to the specified line, grade, and cross section. Replace or readjust portions of the pavement that are defective in composition or deviate from the requirements.

PROTECT AND MAINTAIN THE PAVEMENT

4-58. Before applying the surface treatment, ensure that only necessary traffic travels over the pavement. Drag-broom and roll the surface 10 days after its completion. In addition, correct fat spots and other defective areas that appear during that time.

SECTION V - ROAD-MIX PAVEMENT

CONCEPT

4-59. A road-mix pavement—

- Consists of mineral aggregate and mineral filler that are uniformly mixed in place with bituminous material and compacted on a prepared base or subgrade. It is usually a single layer, about 1 1/2 to 3 inches thick.
- Is likely to become defective unless it has a sound, well-drained subgrade and is well-mixed, uniformly spread, and compacted.
- May be used as a wearing surface on a temporary road or airfield or as a bituminous base or binder course in the stage construction of a permanent road or airfield.
- Is an economical method of surfacing a small area when aggregate can be used from the existing base or when satisfactory aggregate is nearby.

BITUMEN

4-60. The grade and type of bituminous material depends on the aggregate, the equipment available, and the weather. *Table 2-2*, page 2-4, shows the recommended types and viscosity grades of bituminous materials (asphalt cutbacks, asphalt emulsions, road tars) that are suitable for a road mix. Normally, MC cutback is used in moderate climates and SC cutback is used in cold climates.

4-61. Viscosity is controlled by the temperature, the aggregate gradation, and the mixing method. Use the highest viscosity that completely and uniformly coats the aggregate. Normally, open-graded aggregate requires higher viscosity and a gradation containing mineral filler requires lower viscosity.

AGGREGATE

4-62. Scarify aggregate from the existing subgrade or base or haul it in from a nearby source. A wide range of gradations of CA, FA, and mineral filler can be used. *Table 2-1*, page 2-2, shows the recommended gradation limits, and *Table 4-3* shows the suggested bituminous material content for each gradation. After blending the aggregate in windrows, take samples for a sieve analysis. The gradation of the aggregate might have to be changed to meet specific field conditions. Acceptable deviations are—

- Aggregate passing the number 4 sieve: ±7 percent.
- Aggregate passing the number 30 sieve: ±5 percent.
- Aggregate passing the number 200 sieve: ±2 percent.

Table 4-3. Bitumen Content for Road-Mix Pavement

Gradation	Percent of Bitumen
17A	5-8
18A	5-8.5
19A	5-9

4-63. The ideal aggregate for a road-mix pavement is well-graded (dense or open), sandy gravel or clean sand. The maximum size of the aggregate is two-thirds of the compacted thickness of the layer. The loose thickness is about 1 1/4 times the compacted thickness. Test for moisture content before mixing the aggregate with asphalt cutbacks or road tars. If the aggregate is too wet, use a mechanical mixer, a grader, or an improvised plow to allow the excess moisture to evaporate. For cutbacks and tars, the moisture content of CA should not exceed 3 percent and the moisture content of FA should not exceed 2 percent. For emulsions, the moisture content of CA should not exceed 5 percent and the moisture content of FA should not exceed 3 percent.

MIX PROPORTIONS

4-64. The quality of a road-mix pavement depends on the control of the mix. The percentage of bituminous material shown in *Table 4-3* will vary in relation to the absorptive quality of the aggregate, the rate of evaporation of the volatile substances, and other factors. Although an exact formula is difficult to follow, proportioning must be controlled within very narrow limits to assure the stability and life of the mix. With dense-graded aggregates, do not use too much bituminous material. If equipment is available, use the modified Marshall method to establish a trial bituminous content (see *FM 5-428*). Ensure that all particles of the completed mix are coated and uniform in color. If the mix is too lean, it stands almost vertical in the windrow; if it is

too rich, it readily flows back to its previous shape. If the mix is correctly proportioned, a handful squeezed into a ball retains its shape.

CONSTRUCTION

4-65. Construct a road-mix pavement on a dry base when it is not raining and the atmospheric temperature is above 50°F. The initial construction procedure depends on whether the base is a newly constructed base, a scarified existing base, or an existing pavement. *Figure 4-5* shows the sequence of operations for a typical road-mix project.

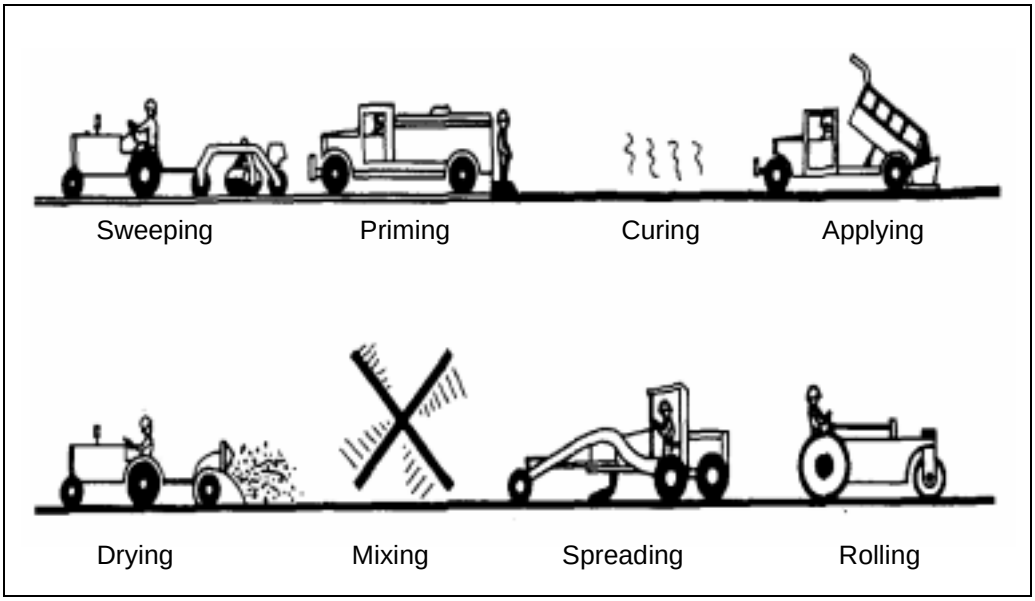

Figure 4-5. Sequence of Operations for a Road-Mix Pavement

4-66. If paving on a newly constructed base—

- Inspect and recondition the base.
- Prime the base and allow the prime to cure.
- Place (or import) and windrow the aggregate at the side of the primed base and allow the aggregate to dry.
- Spread the aggregate on the cured, primed base.
- Spread the bituminous material on the aggregate in one-third increments.
- Mix the bituminous material with the aggregate.
- Blade and aerate the mix.
- Spread the mix to the specified uncompacted thickness.
- Compact the surface.
- Apply a seal coat if necessary.

4-67. If scarifying the aggregate from the base course—

- Loosen the aggregate from the base.

- Dry and break up lumps of material.
- Blade the material into parallel windrows of uniform size at one side and/or in the center.
- Inspect and recondition the base.
- Sweep the base.
- Prime the base and allow the prime to cure.
- Spread the aggregate on the cured, primed base.
- Spread the bituminous material on the aggregate in one-third increments.
- Mix the bituminous material with the aggregate.
- Blade and aerate the mix.
- Spread the mix to the specified uncompacted thickness.
- Compact the surface.
- Apply a seal coat if necessary.

4-68. If using an existing pavement as a base—

- Sweep the base.
- Apply a tack coat and allow it to cure.
- Deposit the aggregate in windrows at the side of the cured, tacked base and allow it to dry.
- Spread the aggregate on the tacked base.
- Spread the bituminous material on the aggregate in one-third increments.
- Mix the bituminous material with the aggregate.
- Blade and aerate the mix.
- Spread the mix to the specified uncompacted thickness.
- Compact the surface.
- Apply a seal coat if necessary.

PREPARE THE BASE

4-69. Inspect the base course, test it according to the criteria in *Section II* of this chapter, and correct deviations. Correct ruts or soft, yielding spots in the base course by loosening, removing, or adding material and recompacting the base to hue and grade. Maintain the line and the grade with grade stakes or steel pins. Place the line and the grade parallel to the centerline of the area to be paved, and space them so that string lines can be stretched in between. Apply a prime coat to the base.

PLACE AND WINDROW THE AGGREGATE

4-70. Aggregate for a road mix on a base or an existing pavement used as a base should be hauled to the paving site in trucks that have suitable spreading devices. Bottom dumps or scrapers can also be used for hauling. The aggregate and the mineral filler should be proportioned by weight or volume, mixed thoroughly by windrowing, and turned with a blade grader. Blade the aggregate into uniform windrows in sufficient quantities and proportions to provide a finished course of the specified thickness. Ensure that the aggregate

does not segregate in pockets or mix with the shoulder, subgrade, subbase, or base material.

4-71. When the aggregate is obtained from an existing base, make test bores along the proposed road or runway to determine if a sufficient amount of aggregate is available and if using the aggregate will affect the bearing qualities of the remaining subgrade. Scarify the base to the required depth, mix the loose material using harrows and graders to break up the lumps, and blade the aggregate into parallel windrows of uniform size at the side and/or center of the paving area. If material must be blended with the scarified base to improve gradation or increase thickness, dump the new material and spread it evenly before or after scarifying. If a prime coat is placed on top of the uncovered base, apply it to the spaces between the windrows and let it cure. Blade the windrows to the cured, primed strips and prime the remaining strips of the base.

4-72. Using windrows helps reduce aggregate loss from the base caused by traffic. They also reduce the moisture absorbed by uncompacted aggregate during wet weather. Windrows should have a cross-sectional area of 6 to 10 square feet for ordinary construction equipment and 10 to 14 square feet for a travel plant.

MIX THE MATERIALS

4-73. If using cutback asphalt for spraying or mixing, heat it to a temperature of 80° to 200°F. Apply asphalt emulsions at 50° to 120°F and tar at 80° to 225°F.

Travel-Plant Method

4-74. With this method, dump, mix, and blade loose aggregate into uniform windrows. As the bucket loader tows the mixer and elevates the aggregate to the hopper, the mixer meters the aggregate, sprays it with the correct amount of bituminous material, mixes the two materials, and redeposits the mix into another windrow behind the plant. Control the travel rate and the mixing operation so that all aggregate particles are coated and the mix is homogenous. Accuracy in proportioning the mix is extremely important. Correct excess or deficient bituminous material and uneven distribution.

4-75. The travel-plant method usually produces a uniform, high-quality mix. Heavy types of asphalt cutback and tar, which reduce the curing time, and an asphalt finisher can be used with the travel plant. Ensure that the finisher's hopper is directly under the travel plant's output chute; this arrangement greatly reduces the maximum output of the plant.

4-76. Windrows cannot contain more material than the finisher can place. The major advantage of this method is that in-place aggregate can be used in an intermediate-type mix and placed with a finisher without loading and transporting aggregate. Use the finisher with the travel plant when constructing airfields and when surface tolerances are critical.

Blade Method

4-77. After blading the dry aggregate into windrows, flatten the windrows and apply bituminous material at the specified temperature. Use a bituminous distributor, and complete at least two equal applications of 0.3 to 0.5 gallon per square yard. After each application, mix the treated aggregate with spring-tooth or double-disk harrows, graders, and/or rotary tillers until aggregate particles are evenly coated.

4-78. When using motor graders, move the windrow from side to side by successive cuts with the blade. Several graders can operate, one behind the other, to reduce the time required for complete mixing. In hilly terrain, the mix tends to drift downhill and collect at the bottom. After mixing the aggregate, blade the mix into a single windrow at or near the center of the road and turn the mix at least four complete turns from one side of the road to the other. If the bituminous material is deficient or the mix is unevenly distributed, correct the situation by adding the required amount of material and remixing.

4-79. If the materials, the weather conditions, and the equipment are well suited to mixed-in-place paving but the road or airfield must carry traffic quickly, windrow the aggregate and mix and spread the bituminous material somewhere else. Do this on any area of smooth ground that can be compacted for this purpose or on any unused road or airfield surface. Prime or tack the surface and allow it to cure. Pick up the bituminous mix, truck it to the site, dump it at proper intervals, and blade it into windrows that are ready for spreading.

BLADE THICKENED EDGES

4-80. When a thickened edge of surfacing is specified, make a triangular cut that conforms to the specified dimensions. Use a motor-grader blade at each edge of the surfacing. Throw the excavated material in a small windrow to the shoulder where the mixture will be spread. Prime the trench and fill it with the bituminous mixture. Roll the layer thoroughly and spread the surface course.

SPREAD AND SHAPE THE MIX

4-81. Spread the mixed, aerated bituminous mixture and the mineral aggregate from the windrow onto the base course in a layer that is uniform in thickness and conforms to the established line and grade. Do not start spreading until the subgrade or base has been inspected and reconditioned as necessary. Do not spread the mixture on a damp surface or when the mix contains excess moisture.

4-82. Spread the mixed material to the required width in thin, equal layers using a self-propelled blade grader, a finisher, or similar equipment. (If using a finisher, support equipment is required. Split the material into two windrows for an 8- to 12-foot wide pavement.) When spreading the mix from a windrow, do not cut into the underlying subgrade or base. If necessary, leave a layer of mix about 1/2 inch thick at the bottom of the windrow. Roll the material and level it with a blade grader. Spread the remaining material and roll it in thin layers until the entire mix is evenly spread to the specified depth

and width. When spreading and compacting, drag or blade the surface to fill ruts and remove corrugations, waves, or other irregularities. Use a multiple-wheel, pneumatic-tired roller when rolling in the early stages.

ROLL THE FINISHED SURFACE

4-83. The rollers should be in good condition, suitable for rolling asphalt, and operated by trained roller operators. After spreading all the layers, roll the surface with a tandem roller. Start at the outside edge of the surface and proceed to the center, overlapping on successive trips at least one-half the width of the roller's wheel. Ensure that alternate trips of the roller are of slightly different lengths and control the roller's speed to avoid displacing the mix. A patrol grader may be necessary for lightly blading (or floating) the surface. Continue rolling until the maximum density is obtained and roller marks are eliminated.

4-84. Moisten the wheels so that the mix does not stick to them. Hand-tamp the mix in places that are inaccessible to the roller. If the surface course becomes rough, corrugated, uneven in texture, or marked by traffic, tear up unsatisfactory areas and rework, relay, or replace them. If any part of the surface becomes water-soaked while being laid, tear it up, place it in a windrow, aerate it until the moisture content is within the specified limits, spread it, and reroll it.

SHAPE THE EDGES

4-85. Trim the outside edges if forms were not used. This can be done while the surface is being compacted and finished if time permits.

TAKE SAMPLES

4-86. Take samples of the mix every 400 tons of mixed aggregate. Test the gradation, the percent of bituminous material, and the thickness and density of the completed wearing surface. If deficiencies in composition, density, or thickness exceed the specified requirements, remove and replace the material.

TREAT THE SURFACE

4-87. If the road-mix surface course is open-graded aggregate, a surface treatment may be necessary for waterproofing. A surface treatment is unnecessary on a densely graded, well-compacted, road-mix pavement.

SECTION VI - PLANT-MIX PAVEMENT

CONCEPT

4-88. A plant mix is a mixture of mineral aggregate and bituminous material that is mixed at a central plant. Proportioning of the aggregate and the bituminous material is closely controlled, and the mineral aggregate is usually dried and heated before mixing. The mixed material is transported to the site, spread, and compacted. A mix plant generally consists of portable units that may be assembled in various combinations. (See *Chapter 3* for

information on various types of central plants.) Plant-mix pavement is usually superior to mixed-in-place pavement or penetration macadam because a heavier grade of bituminous material can be used; therefore, proportioning and mixing is more effective.

4-89. Different setups are used for central plants, allowing mixes to be produced with the required degrees of accuracy and economy that are compatible with the type of road or airfield under construction. (See *TM 5-3895-374-10* for recommended layouts for a drum-mix plant.)

HOT-MIX BITUMINOUS CONCRETE

4-90. Hot-mix bituminous concrete that is mixed in a batch or drum-mix plant is generally composed of well-graded mineral aggregate, mineral filler, and bituminous cement. It is particularly suitable for surfacing airfields and roads and streets with heavy traffic. It is also used for base and binder courses.

4-91. To prepare hot-mix bituminous concrete, thoroughly dry and heat the aggregates. Then, accurately proportion and mix the aggregates at the specified rate with bituminous material that is 250° to 350°F (liquid form). Spread the mix with an asphalt finisher or by hand where the finisher cannot be used. While the asphalt is still hot (about 250°F), use power rollers to compact it to the required density and thickness. Hot mixes lose their workability when cooled to air temperature.

4-92. The hot-mix method ensures that the aggregate is coated with a uniform film of bituminous material and that the size of the aggregate and the quantity of the bituminous material are accurately controlled. Hot-mix pavements—

- Do not require a curing period.
- Can be used as soon as they have been compacted to the required density and cooled.
- Can be constructed rapidly with minimum probability of damage to unfinished pavements from unfavorable weather conditions.
- Have a high stability and resistance to moisture-penetration damage immediately after rolling and cooling.
- Are durable, waterproof, and homogenous in character.
- Must be laid over a base course that is constructed to provide structural stability and distribute the wheel load over the subgrade.

4-93. The highest quality bituminous pavements are constructed from hot-laid mixes made with AC. Based on the grades of mineral aggregate and bituminous material used, they are also known as asphalt concrete, tar concrete, sheet asphalt, or stone-filled sheet asphalt. Hot mixes are recommended for use whenever equipment, material, and manpower are available. Probable causes of deficiencies in hot mixes observed at the plant are shown in *Table 4-4*, page 4-24; probable causes of imperfections in finished pavement are shown in *Table 4-5*, page 4-25.

Table 4-4. Probable Causes of Deficiencies at the Plant

Type of Deficiency									Probable Cause of Deficiency	
Bitumen Content Formula Error	Gradation Formula Error	Poorly Mixed Loads	Fat, Rich Mixtures	Mixture Temperature Error	Smoking Loads	Steaming Loads	Overweight or Underweight Loads	Lack of Moisture Uniformity		
X	X		X						Batch Plants	Aggregate scales out of adjustment
	X						X	X	Batch Plants	Bridging of hot aggregate in bin
X			X				X	X	Batch Plants	Bitumen scales out of adjustment
X	X		X				X	X	Batch Plants	Lack of proper weighing by operator
X	X	X	X				X	X	Batch Plants	Faulty pug-mill dump
		X	X					X	Volumetric Plants	Bitumen temperature too high
X	X	X						X	Volumetric Plants	Improper setting of pug mill
X	X		X					X	Volumetric Plants	Bitumen and aggregate feed adjustment
X			X						Volumetric Plants	Bitumen pump not functioning right
X	X							X	Volumetric Plants	Not enough hot aggregate in bins
X	X		X					X	All Types of Plants	Aggregate gates not set properly
				X	X	X			All Types of Plants	Drum feed not uniform
				X	X	X			All Types of Plants	Improper dryer operation
X								X	All Types of Plants	Too little bitumen
X			X					X	All Types of Plants	Too much bitumen
X	X		X						All Types of Plants	Sampling method not uniform
						X		X	All Types of Plants	Excessive aggregate moisture
X	X							X	All Types of Plants	Bin overflow pipes not functioning
X	X		X					X	All Types of Plants	Leaky bins
	X							X	All Types of Plants	Separation of aggregates in bins
X		X						X	All Types of Plants	Mixing time not uniform
X	X		X					X	All Types of Plants	Mineral filler feed not uniform
				X	X				All Types of Plants	Aggregate temperature too high
				X	X	X	X	X	All Types of Plants	Temperature out of adjustment
X	X		X		X	X		X	All Types of Plants	Improper feed of aggregates to dryer
				X		X		X	All Types of Plants	Overrated dryer capacity
	X							X	All Types of Plants	Faulty screen operation
		X						X	All Types of Plants	Overloaded pug mill

Table 4-5. Probable Causes of Imperfections in Finished Pavements

Type of Imperfection														Probable Cause of Imperfection
Bleeding	Brown, Dead Appearance	Poor Surface Texture	Rough, Uneven Surface	Uneven Lateral Joints	Uneven Longitudinal Joints	Roller Marks	Pushing	Waves	Cracking	Honeycomb	Distortion	Tearing of Surface During Laying	Rich or Fat Spots	
X														Excessive prime coat
		X	X				X		X	X			X	Improper proportioning
X		X	X				X		X	X		X	X	Unsatisfactory batches in load
			X	X	X			X		X	X			Poor handwork behind spreader
		X	X						X	X				Excessive segregation in laying
			X			X					X			Inadequate rolling
			X		X			X		X	X	X		Poor spreader operation
	X						X							Mixture too hot or burned
			X	X	X		X	X	X	X		X		Mixture too cold
			X				X	X			X			Mixture rolled when too hot
			X		X	X			X					Mixture rolled when too cold
		X					X		X					Poorly graded mixture
			X								X			Unstable base course
				X	X									Faulty allowance for compaction
			X					X						Roller standing on hot pavement
		X							X	X				Mixture too coarse
	X								X			X		Insufficient bitumen in mixture
X							X						X	Excess bitumen in mixture
			X			X					X			Inadequate cross rolling
				X	X									Pavement not cut back to uniform thickness
	X						X							Excessive moisture in mixture

COLD-LAID BITUMINOUS PLANT MIX

4-94. Cold-laid bituminous plant mixes cover a wide variety of types and grades of bituminous material and aggregate gradations. Cold-laid asphalt-concrete pavements are composed of AC; a well-graded mineral aggregate; and a liquefier, an asphalt cutback, or an asphalt emulsion. The aggregates in

a cold mix are usually the same as those in a hot mix. They are heated only for drying, but the bituminous material must also be heated so that it will thoroughly coat the aggregates. A cold-laid plant mix is similar in appearance and general physical characteristics to a hot mix, but it is less durable. Cold mixes can be stockpiled and used for small repairs.

4-95. A curing period is required to allow evaporation of excess moisture and volatile substances contained in the bituminous materials of the liquefier. In cold weather, high density is difficult to secure by rolling and the initial stability is likely to be low. It is especially suitable for patching and for small jobs where the amount used does not justify erecting a hot-mix plant. A cold-laid plant mix can be manufactured at a central plant, shipped by rail or truck to the paving site, and produced in small quantities.

4-96. One type of cold-laid bituminous plant mix is composed of graded mineral aggregate and RC-250 or RC-800. Use the modified Marshall method to determine the quantities of bituminous material needed (see *FM 5-472*). Another type of cold mix is prepared with aggregates containing no more than 2 percent moisture and sprayed with a liquifier and AC of 85 to 100 penetration. Regulating the amount of liquid, using SC asphalt, and using RT-5 through RT-9 reduce the curing period for cold-laid plant mixes. Spread cold-laid plant mixes using blade graders or mechanical spreaders.

BITUMINOUS MATERIALS

4-97. *Table 2-2*, page 2-4, lists the recommended bituminous materials to use in hot-mix and cold-laid pavements. *Table 2-1*, page 2-2, lists aggregate gradations for the various types of hot-mix surface and binder courses. Aggregate gradations for cold mixes are the same as for hot mixes and road mixes.

LAYING A HOT MIX

4-98. The following procedures are recommended for laying hot mix, but other methods may also be effective. *Figure 4-6* shows the sequence of operations for placing a hot-mix pavement.

Step 1. Sweep the base.

Step 2. Patch cracks and holes if placing the mix on existing pavement.

Step 3. Apply a prime or tack coat. Use a tack coat over a prime coat if the prime coat has become old and dirty.

Step 4. Allow the coat to cure.

Step 5. Inspect the equipment.

Step 6. Inspect and sample the mix.

Step 7. Place and spread the mix.

Step 8. Hand-rake the mix where necessary.

Step 9. Roll the surface with a breakdown compaction roller and check for conformance to grade requirements.

Step 10. Roll the surface with an intermediate roller.

Step 11. Roll the surface with a finish roller.

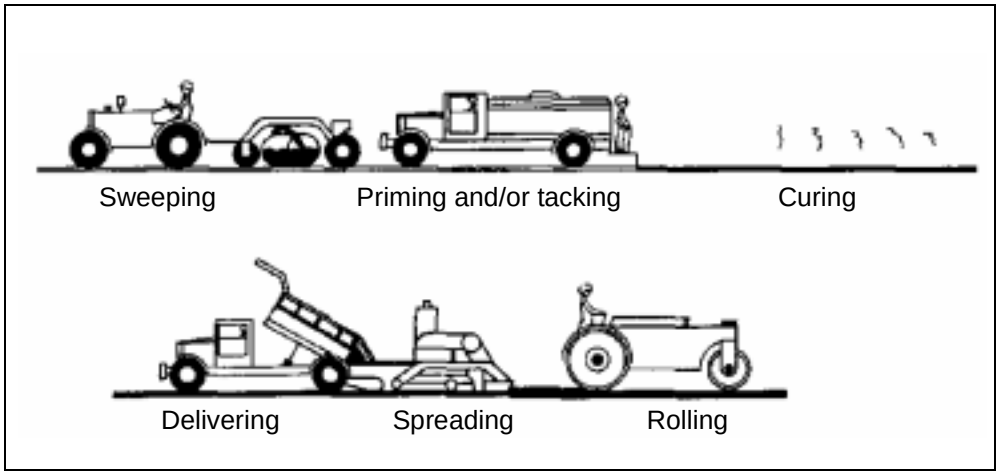

Figure 4-6. Sequence of Operations for a Hot-Mix Pavement

4-99. Ensure that construction equipment complies with the operating specifications, is adequate for the operation, and is in good operating condition. Adjust, repair, or replace items or pieces of equipment as necessary. Check the rollers and the spreader. Check the screed on the spreader for warping or scoring. Adjust the screed setting to achieve a properly leveled crown in lanes that deviate from the plane surface. For lanes that require a level surface, set the screed about 1/8 inch high in the center, sloping uniformly toward both edges. This prevents the surface from becoming dished. Adjust the screed based on the straightedge depth tests on the completed pavement.

DETERMINING THE PLACEMENT TEMPERATURE

4-100. The optimum hot-mix placing temperature depends on the weather and the rolling characteristics of the mix. Once the placing temperature is reached, maintain it at ±25°F. Remember to consider the average heat loss between the plant and the spreader.

INSPECTING AND REJECTING THE MIX

4-101. Check each truckload of hot mix when it arrives from the central plant and when it is dumped. Ensure that the mix temperature complies with the requirements. Most mistakes are made during batching, mixing, and heating.

4-102. After inspection, reject and discard all or part of the truckload as necessary. When rejecting a portion of a truckload, remove the unsatisfactory material from the spreader hopper or the grader and discard it. Rejection is caused for the following reasons:

- **Too hot.** Blue smoke rising from the spreader hopper usually indicates an overheated batch; check the temperature immediately. Discard the batch if the temperature exceeds the maximum specification requirement (usually 350°F). Do not discard a batch when it exceeds the optimum temperature (325°F) but stays below

350°F. However, check the equipment immediately and adjust it to avoid overheating.

- **Too cold.** A stiff appearance or improper coating of large aggregate particles indicates a cold mix; check the temperature immediately. Discard the mix if the temperature is below the specification requirement (usually 250°F), and take immediate steps to correct the condition.
- **Too rich.** A mix that has too much bituminous material can be detected immediately. If a load normally arrives at the spreader with the material peaked or domed and a load suddenly appears with the material lying flat, the mix probably contains too much asphalt. Inspect the load immediately. Excess bituminous material is apparent under the screeds by the way the mix slicks off. Sometimes a hot screed causes a slick surface, which indicates excessive bituminous material. This appearance will disappear when the mix cools. If a slick surface appears, check the screed. If the screed is hotter than usual, keep the mix in place until it cools to determine whether the slick surface was caused by a hot screed or an excess of bituminous material. If the slick appearance does not disappear, reject the mix.
- **Too lean.** A mix that does not have enough bituminous material has a lean, granular appearance. The aggregate is improperly coated, and the amount of slump in the truck is less than usual. The mix lacks the typical shiny, black luster; and its action under the screeds is abnormal.
- **Miscellaneous.** Other reasons for rejection are excess fines, excess coarse material, and nonuniform mixing.

PLACING AND SPREADING THE MIX

4-103. Placing and spreading a hot mix consists of uniformly distributing the loose material on a completed base to obtain the specified thickness, line, and grade.

Hand

4-104. Spread the hot mix by hand if an asphalt finisher is unavailable or an asphalt spreader cannot be used (adjacent to curbs, surrounding manholes, and at curved corners of intersections). Dump the mix from the trucks onto dump boards or into conveniently sized piles. Shovel the material onto the prepared base, rake it smooth to grade and contour, and roll it. This method is only used to supplement other spreading methods because of the labor involved and its inability to obtain a smooth, even-textured surface.

Blade

4-105. Occasionally, it is necessary to use a motor grader to spread hot mix. To obtain surface smoothness, position the blade midway between the front and the rear and make multiple passes. Successive passes further reduce base irregularities in the surface. Because blade spreading usually leaves unsatisfactory edges, do not attempt to make joints. Instead, spread the mix across the full width of the road at one time by using an echelon of graders or by making multiple passes with one grader. Blade spreading can cause the

mix to segregate. As the blade spreads out the windrow, large particles of coated aggregate fall toward the outside edge of the road. Like road-mix pavements in hilly terrain, blading tends to drift the mix downhill and the excess mix accumulates at the bottom.

Mechanical

4-106. Except when starting at a transverse joint butted against previously placed pavement, place a wooden shim under the screed of the asphalt finisher. The shim's thickness should be equal to the uncompacted thickness of the course being placed. This allows the screed to start at the proper height and prevents dragging the mix, which causes ragged, uneven pavement and depth deficiencies.

4-107. When starting from a transverse joint, use metal strips equal in thickness to the difference between the rolled and the loose thicknesses of the pavement. At the start of a placing operation, heat the screed to the approximate temperature of the mix. Check the screed temperature occasionally during the operation; and when the operation is delayed for more than a few minutes, reheat the screed to the desired temperature. Do not spread the mix too quickly because doing so can tear or pull the surface. Tearing can also result from insufficient heat or the mix adhering to a dirty screed. Pulling can also result from the spreader being operated too fast, a worn-out screed being used, tamping bars being out of adjustment, or a poorly graded mix.

Asphalt Finisher

4-108. *Figure 4-7,* page 4-30, shows an asphalt finisher spreading hot mix. Trucks dump the mix into a hopper at the front of the finisher. After dumping the mix, the truck driver firmly fits both sets of truck wheels against the finisher's bumper rolls that push the trucks. (If the driver pushes only one set of wheels against the bumper rolls, the finisher tends to turn.) The finisher's operator makes continual corrections to avoid leaving irregular, ragged, or poorly compacted joints. If the mix tends to cling to the sides of the hopper, loosen it continually to promote correct placement. When the mix accumulates, it cools rapidly and a slug of semicold material will eventually reach the grade.

4-109. Compared to blade spreaders, asphalt finishers have a higher capacity, provide a smoother riding surface, and are able to handle stiffer hot mixes. When a load is deposited into the hopper, CA has a tendency to flow to the outside edges of the hopper and cause undesirable joints of coarse material. To prevent this, use shovels to push the coarse material to the center of the hopper.

COMPUTING THE DEPTH

4-110. Experience is important when placing the loose depth required for the specified compacted depth. Loose depth is roughly equal to the compacted depth multiplied by 1.25. Measure the loose depth with a depth gauge at frequent intervals, and take at least three measurements across the lane. At

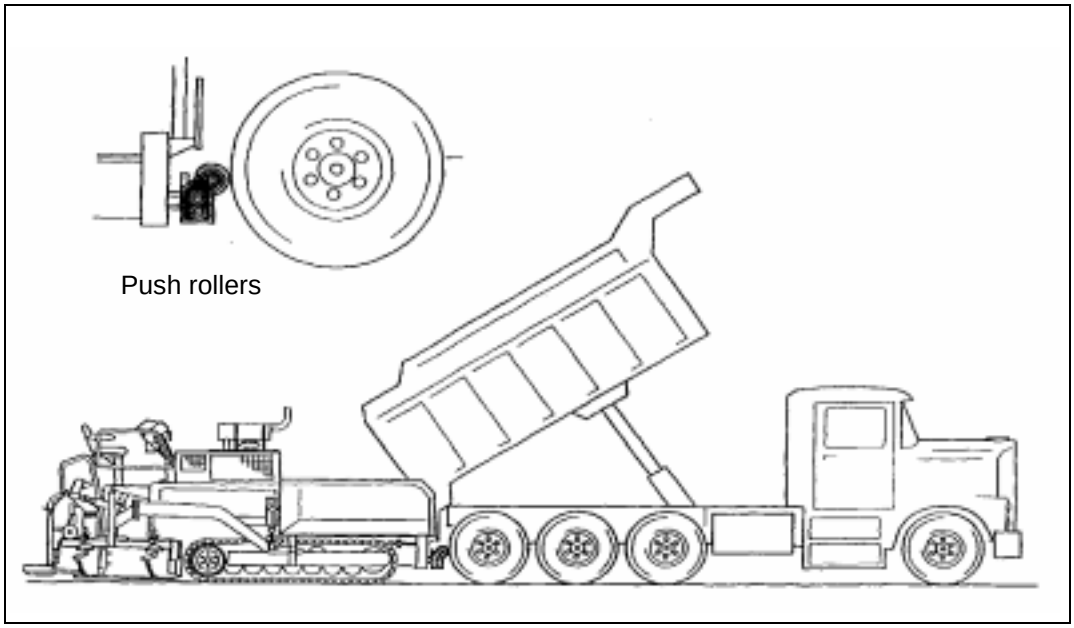

Figure 4-7. Asphalt Finisher Placing Hot Mix

the beginning of the paving operation, take enough measurements to secure a good average of the loose depth.

4-111. When paving operations are well underway and progressing smoothly, conduct yield checks and take depth samples. Cut the depth specimen carefully and remove it from the hole, trying not to disturb the base. When removing the specimen, place it top down on a plane surface. Lay a straightedge across the specimen and measure it to the supporting surface. A quick depth check of loose mix or finished pavement can be achieved by laying a straightedge on the surface, overhanging the lane edge, and measuring from the straightedge to the base or binder course.

4-112. After determining the average loose and compacted thicknesses, establish a ratio between them for correcting the loose depth. The following example shows how to compute for loose depth:

Example: The desired compacted depth is 1.5 inches, the average loose depth is 1.86 inches, and the average compacted depth is 1.44 inches. Determine the corrected loose depth.

Solution:

$$\textit{compaction ratio} = \frac{\textit{average loose depth}}{\textit{average compacted depth}} = \frac{1.86}{1.44} = 1.29 \textit{ inches}$$

$$\textit{corrected loose depth} = \textit{compaction ratio} \times \textit{desired depth} = 1.29 \times 1.5 = 1.94 \textit{ inches}$$

ADJUSTING THE SCREED

4-113. Reset the screeds when starting a paving job or resuming paving operations, such as following a change in course thickness. Depth tests are

approximations and represent the pavement thickness only at the points tested. Therefore, do not adjust the screed every time a depth check does not yield the prescribed thickness. The finisher is designed to bridge irregularities in the base; thus, a thin spot in the course could be covering a high point in the base. Frequent screed adjustments to maintain a preset depth will accent irregularities in the base and yield a nonuniform surface. A more accurate check of average pavement thickness can be done by watching the yield. Where the yield is appreciably and consistently high or low and a discrepancy cannot be determined, adjust the screed setting accordingly.

RAKING THE MIX

4-114. Keep hand-raking to a minimum; use it only to correct nonuniformity of grade or surface texture. Remove coarse material that is segregated in areas, replace it with fresh hot mix from the hopper, and rake the fresh mix smooth. Return small amounts of coarse material to the hopper; if a large quantity goes through the paver, discard it. Do not let it cast over the fresh surface because coarse particles cool rapidly and the rollers merely embed them into the surface, leaving small surrounding pits. Press loose material that is along the edge of the lane firmly against the edge.

ADJUSTING THE MIX

4-115. Change the mix against specifications and the mix-design criteria if placing, rolling, or surface texture are unsatisfactory. Even if the mix is uniform, it may require adjustment. Conditions and corrective measures are shown below:

- **Insufficient fines.** Correct this problem by adjusting the job-mix formula to a finer gradation.
- **Mix pulling and checking.** If a mix pulls under the finisher, correct it immediately if the small open checks are not definitely closed during rolling. This condition is especially critical in the surface course. It may be caused by unsatisfactory proportioning of the mix, a mix that is too cold, or improper finisher operation. When the total FA is composed of stone screening and sand, using an excessively high proportion of screenings may unduly toughen the mix. A tough mix is stabile, but can pull badly. A small change in the amount of FA (sand) may make an appreciable difference in placing and rolling characteristics. Also, increasing the amount of sand may not necessarily affect the stability. If the condition is limited to surface checking and if checking persists in spite of mix-design changes, correct it by scratching the surface lightly. One method is to fasten stiff-bristled pushbrooms on a light timber (such as a 2- by 4-inch board) the length of the lane width and drag the surface 2 or 3 feet behind the spreader. Incline the brooms slightly to prevent the bristles from gouging the pavement.

ROLLING THE PAVEMENT

4-116. Ensure that the rollers are wet to prevent the mix from sticking to them. Use clean boards of sufficient length at the end of the lane to support the rollers and prevent contact with the base. The boards should be as thick as

the loose depth of the pavement or should meet it. Ensure that the roller's wheels are completely clean before the roller moves from the boards to the mix. Roll freshly laid pavement when the desired density is obtained without raveling or blistering. Time periods required for rolling the pavement after it is laid may vary greatly depending on the thickness of the pavement and the weather conditions.

Techniques

4-117. Roll the surface before it has cooled (breakdown rolling) to avoid surface checking, which is a condition that is difficult to correct. A steel-wheel roller is normally used during the initial rolling. Roll with the power wheel forward or nearest the finisher. This causes the mat to be tucked under the roller wheels instead of being pushed as when the tiller wheel is in front. If the mat is too cold, proper density will not be obtained. The roller should follow the spreader closely.

4-118. If the mix is too hot, the surface may blister as a result of the water boiling off the wheels and the mix sticking to the dry wheels. If this occurs, use rakes to loosen the mix to a depth of about 1/2 inch over an area somewhat larger than the blister and rake the mix smooth. For best results, vary rolling techniques with mix characteristics and other conditions. Hot mix is sensitive material, and few mixes react to the rollers identically. The rear wheels of the steel-wheel roller supply most of the compaction; although when some mixes are very hot, they cannot withstand the rear wheels without undue displacement and checking. To prevent this, hold the roller farther back and allow the mix in the back of the spreader to cool. Siliceous aggregates that have a poor affinity for asphalt can also show this tendency.

4-119. If the temperature is suitable for rolling and the three-wheel roller unduly checks or shoves the pavement, it may be necessary to adjust the mix. Satisfactory mixes should not check or shove under proper rolling with a three-wheel roller. Ensure that the density in the field always meets the requirements. Variations in the surface may occur from the forward and backward movements of the roller.

NOTE: Overpriming will often cause rolling difficulties similar in appearance to those caused by a very hot mix.

Uneven Surfaces

4-120. Ensure that the completed pavement conforms to the requirements for surface smoothness. Test the surface with a straightedge after the first roller passes, while the mix is still hot and the surface can be loosened. If a deficiency exists, check the problem area immediately to determine if the problem is caused by a depression or a high spot. Correct a depression by using rakes to loosen the material to a depth of about 1/2 inch; distribute fresh, hot material by hand; and rake the surface smooth. Correct a high spot by using rakes to loosen the mix to a depth greater than the final desired grade, remove the excess material, and rake the surface smooth. Conduct straightedge tests after the final rolling to check conformity with the smoothness criteria.

Uniformity

4-121. Roll the surface as uniformly as possible to obtain a pavement that is true to grade and compacted to a uniform density. Heavier rolling at the edges of the lane than in the center will produce a crowned lane. Insufficient rolling is far more objectionable than excess rolling. When rolling an outside lane, uniform coverage cannot be obtained with the rear wheels because a roller cannot operate with one of the wheels off the pavement. Complete the rear-wheel coverage after placing the adjoining lane.

4-122. When rolling a fresh lane that joins a completed lane (hot or cold joint), ease the steel-wheel roller from the old lane onto the new one. Make the first pass with one rear wheel centered on the joint and the other rear wheel on the completed pavement. Continue rolling across the fresh lane, progressing by the width of the rear wheel, less a reasonable lap to avoid leaving a ridge. With this rolling system, the rear wheel passes over the half of the lane that is nearest the old pavement twice as many times as the other half. However, if this system is followed through successive lanes, uniform coverage is obtained. Stagger the area at least 5 feet where rolling directions are reversed, thereby eliminating ridges formed by starting and stopping the roller.

Displacement

4-123. Displacement occurs when the pavement moves on the base or binder course while it is being rolled. This movement may be accompanied by transverse or longitudinal cracks. Displacement also results from a very hot mix, an excessive tack or prime coat, or too much rounded FA. If displacement occurs, discontinue rolling immediately, determine the cause, and take corrective action.

Pneumatic-Tired Rollers

4-124. Pneumatic rolling of asphalt-concrete pavement provides a more closely knit surface by seating the larger aggregate particles better and by closing hairline cracks. Conduct pneumatic rolling while the pavement is still warm. Light rollers have little effect when the pavement temperature is lower than 130°F. To get the desired results, work the pneumatic-tired roller continuously during laydown. After rolling the surface with a steel-wheel and/or pneumatic-tired roller, iron out the surface with a two- and/or three-axle tandem roller. Do not leave the rollers on the fresh pavement because they will leave marks that are almost impossible to remove. Mat imperfections and their probable causes are shown in *Table 4-6*, page 4-34.

DENSITY TESTS

4-125. Conduct a density test as often as the conditions require, but at least once for every 400 tons of mix placed. To get a satisfactory specimen, take a sample early in the morning when the pavement is cool. If extra rolling is required due to the test results, do it during the heat of the day. As a general check, conduct at least one density test daily on a chunk sample (see *FM 5-428*).

Table 4-6. Typical Mat Problems and Probable Causes

Type of Imperfection														Probable Cause of Imperfection
Bleeding	Brown, Dead Appearance	Rich or Fat Spots	Poor Surface Texture	Rough, Uneven Surface	Honeycomb or Raveling	Uneven Joints	Roller Marks	Pushing or Waves	Several Fine Cracks	Large, Long Cracks	Rocks Broken by Roller	Tearing of Surface During Laying	Surface Slipping on Base	
				X				X					X	Insufficient or nonuniform tack coat
				X				X					X	Improperly cured prime or tack coat
			X	X	X	X					X	X		Mixture too coarse
			X				X	X	X				X	Excess fines in mixture
	X				X				X			X		Insufficient asphalt
X		X					X	X					X	Excess asphalt
X		X	X	X	X		X	X	X		X	X	X	Improperly proportioned mixture
X		X	X	X	X			X						Unsatisfactory batches in load
	X							X					X	Excess moisture in mixture
	X											X		Mixture too hot or burned
			X	X	X	X	X				X	X	X	Mixture too cold
			X	X	X	X		X			X	X		Spreader in poor condition
									X	X			X	Excess moisture in subsoil
X		X											X	Excess prime or tack coat
			X	X	X	X		X						Excess hand-raking
			X	X	X	X	X							Careless or unskilled labor
		X	X	X	X	X						X		Excess segregation in laying
			X									X		Finishing machine operated too fast

SELECTING AND MARKING SAMPLES

4-126. A sample can be taken from any portion of a lane as long as that area is typical of placing and rolling conditions. Cores that are 4 inches in diameter are good samples. These cores are relatively small and errors are multiplied accordingly; therefore, take care when weighing them. Taking samples from a surface course that is placed on a binder course is practically impossible. To make removal easier—

- Select the spot before laying the surface course.
- Place an 18-square-inch piece of wrapping paper on the selected spot. Ensure that the mix placed over the paper is the same as the rest of the pavement. To allow for the possibility of multiple density checks, place extra paper between the courses in other locations. Do not use frames or separators to mark these spots.

- Drive two nails in the base or the pavement an equidistant from the center of the paper on the side of the lane that is subjected to the least amount of construction traffic.

REMOVING SAMPLES

4-127. Use a coring machine or a concrete saw to cut out samples. Avoid chopping them out or removing them with a jackhammer because it can cause cracks or other problems to occur that lead to erroneous results. Cutting completely through the pavement's thickness, carefully remove 1-foot square samples from the binder or surface course. In hot weather, the area can be chilled with ice for 15 to 30 minutes before cutting out the sample. Ensure that the sides of the hole are vertical or dressed to vertical after the specimen is removed. Paint the edges and the bottom of the hole according to the instructions for a trimmed joint. Fill the hole with fresh hot mix, roll it, and check it for straightedge requirements.

IDENTIFYING SAMPLES

4-128. Forward the specimen to the plant laboratory with proper identification. Use a simple numbering system and annotate the—

- Course (binder, surface).
- Date the course was placed.
- Date the sample was taken.
- Type of structure (runway, taxiway).
- Lane number (with lane centerline offset).
- Station number.

CORRECTING LOW DENSITY

4-129. If the density test shows that the minimum specified density has not been obtained, correct the problem by additional rolling or by removing the pavement and replacing it to meet the minimum specified density. If the density problem persists, make a thorough check of the job-mix formula. A slight change in the gradation or the bitumen content may improve the density. Test the pavement's density as often as necessary to ensure that it conforms to specifications.

4-130. If the density is within 0.5 percent of the minimum specified, reroll the pavement thoroughly with a steel-wheel roller, ensuring complete rear-wheel coverage, and follow the steel-wheel roller with a tandem roller. Because rolling is more effective on warm pavement, reroll it during the heat of the day when possible. After rerolling, recheck the density. If it is still below the minimum specifications, reroll the pavement thoroughly and check the density one more time. If the density is more than 1 percent below the minimum specifications, reroll the pavement during the heat of the day with a heavy pneumatic roller whose tires are inflated to 90 psi and check the density. Make turns on a radius that is large enough to prevent scuffing.

4-131. Binder and surface densities can be readily achieved without a great deal of difficulty if the aggregate gradation is within the typical specification band, the mix conforms to the mix-design criteria, and the weather is warm or

hot. If the weather is cold, achieving density may be difficult. Check the job mix thoroughly if the density consistently falls below the specifications, and reroll the pavement if necessary.

LONGITUDINAL JOINTS

4-132. When laying binder and surface courses, offset the joints by at least 1 foot. To avoid unsatisfactory spacing of joints, follow a general paving lane plan. Asphalt finishers usually operate with greater efficiency when laying standard 10-foot lanes; however, adjust them for wider or narrower lanes. Because the surface course is usually more critical than the binder course, lay it in standard 10-foot lanes. (A variation in the width of a lane is usually limited to the binder course.) The following examples show how to place lanes on binder and surface courses, ensuring that the joint is offset by at least 2 feet and the center-crowned runway is 150 feet wide:

- **Binder course.** Place the first lane of the binder course to a 10-foot width, with one edge along the centerline of the runway. Place the adjoining four lanes to 10-foot widths, leaving 25 feet between the outer edge of the fifth lane and the runway edge. Place the sixth lane to a 9-foot width, and the seventh and eighth lanes to 8-foot widths. Repeat this procedure on the other half of the runway.
- **Surface course.** Center the first lane of the surface course on the centerline of the runway, and adjust the screeds to provide the desired crown and grade. Continue with the adjoining lanes in even, 10-foot widths to the runway's edges.

CONSTRUCTION

4-133. Joints can be laid and rolled while they are hot or cold. When placing an adjacent lane and the mix in the preceding lane is hot, the joint is hot. When the mix in the preceding lane has cooled before the adjacent lane is placed, the joint is cold. Generally, hot joints require less work and are better. However, the only way to place hot joints is to make very short runs that result in a large number of transverse joints. Because smooth transverse joints are difficult to make, laying operations consist of both hot and cold joints.

4-134. Ensure that the vertical face is free of excess loose, coarse material. This eliminates voids and depressions in the joint when it is rolled. Use a combination of hot and cold joints only when the plant breaks down or when delivery of the mix is interrupted. Pave a length, such as 1,000 to 1,500 feet, and then pave the adjoining lane in the opposite direction.

Hot Joints

4-135. To lay hot joints, roll a short paving run on one lane, return to the starting point using a finisher, and pave the adjacent lane in the same direction. Roll the first lane to within 6 inches of the edge, and place the fresh mix against the hot, unrolled material. The length of the run varies with the rolling characteristics of the mix, the temperature of the mix, and the weather conditions. Make the length of the initial lane short enough so that the joint

will be hot, but not so short that the operation is merely a series of stops and starts.

4-136. In general, do not let the length of the run exceed the distance required to maintain the mix in the unrolled edge of the initial lane at a minimum of 175°F. Ensure that the finisher is butted tightly to the old lane. Use rakes to smooth off the joint, including any ridge of loose mix in the first lane pushed up by the finisher *(Figure 4-8)*, and dress the surface to a uniform texture. The density and uniformity of a hot joint are superior to those of a cold joint. A hot joint is tighter and more homogeneous if the run is short enough to maintain the temperature requirements in the unrolled edge.

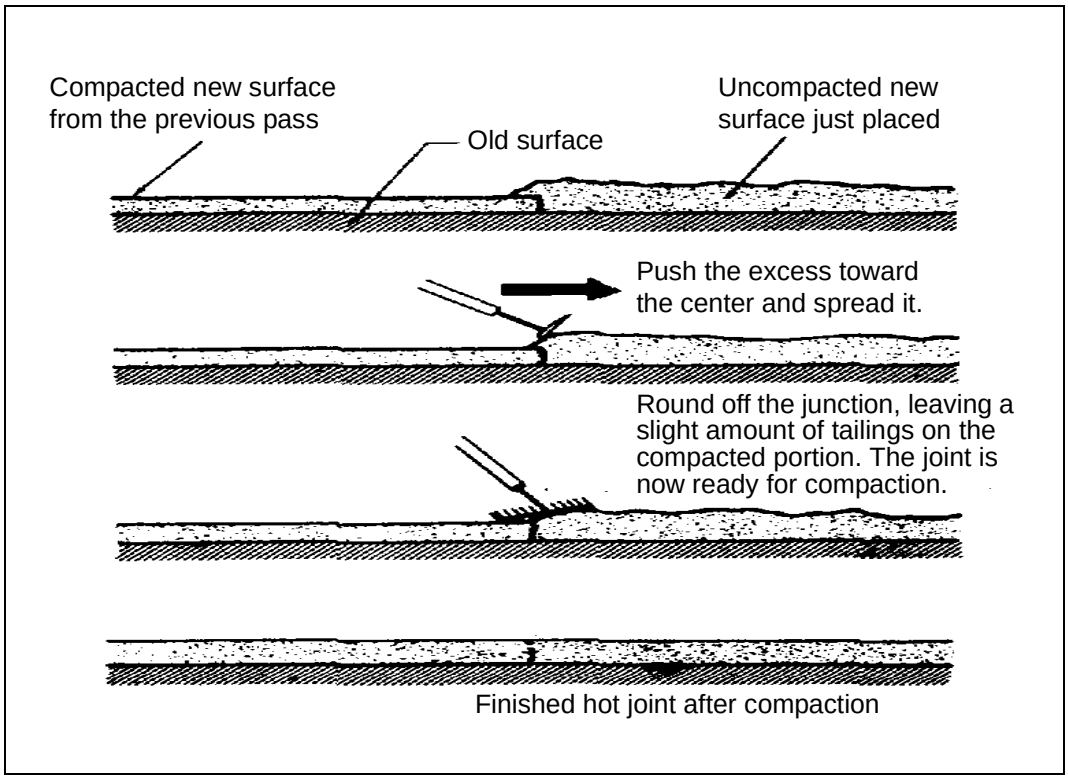

Figure 4-8. Raking a Joint

Cold Joints

4-137. To form cold joints, roll the existing lane across its entire width during the original construction. Roll the edge with the roller overhanging the edge about 1 inch. Before placing the new lane, trim the vertical edge of the existing lane to a vertical face so that clean aggregate faces are exposed. Tack or paint the trimmed joints very lightly with RC-70 cutback or an emulsion. If

RC-70 cutback is unavailable, use AC cutback mixed in equal parts with white gasoline.

CAUTION
Do not cut back AC while it is above the flash point because an explosion or a fire can occur.

4-138. Remove loose material from the cold edge before laying fresh mix against it. When placing a new lane, ensure that the finisher is as close as possible to the cold edge, with the finisher shoe riding the old lane. The advantage of laying cold joints is that long, continuous runs can be made while keeping one lane open to limited traffic. Disadvantages are that the cold joint must be trimmed and painted, and the loose thickness must be compacted to the same thickness as the previously placed lane.

ALIGNMENT

4-139. Place a string line to guide the finisher, place the first lane along the edge of the line, and place succeeding lanes against the edge of the previously laid lane. In airfield construction, place a string line along the outside edge to verify that the pavement conformed after placing the third or fourth lane. Sharp, short, horizontal waves frequently exist in the outside edges of the third or fourth lane. When a finisher tries to follow these waves, they are accentuated in the next lane. Besides being unsightly, the wavy condition is conducive to ragged, nonuniform joints of variable density.

4-140. Before the condition becomes exaggerated, lay a new string line along the outside edge, parallel to the first string line, as a guide for the next lane. Lay the string line by cutting through the sharp protruding areas, which should be cut back to the line; and fill in the minor recesses when the next lane is paved. At or near the ends of the protruding areas, leave only minor portions to be cut back to the line and larger recesses to be filled.

4-141. Fill gaps and recesses that remain between the previous lane and the next lane; rake the surface smooth. Because hand-placed material has a lower density than the material placed by a finisher, dress these areas slightly higher. Test the areas closely with a straightedge after the first roller pass.

TRANSVERSE JOINTS

4-142. A transverse joint is formed in the pavement at the end of a lane. Try to carry a continuous transverse joint throughout as many lanes as possible; however, joints may be staggered.

TERMINATING A LANE

4-143. When stopping mix placement in a lane, roll the transverse joint to a feathered edge. Cut back the feathered section, which may extend several feet, to the full depth of the pavement. If the portion being removed is directly on the primed base, tear out some of the base material when the edge is removed. Patch the pockets in the base to grade or take other corrective measures to avoid having extra pavement depth along the edge of the joint.

4-144. One preventive measure is to place a strip of heavy wrapping paper, 30 to 36 inches wide, so that one edge is along the joint line and the other edge extends beyond the joint line. Run the finisher to the edge of the paper. When the edge of the joint is rolled, cut back the pavement to the joint and remove it without disturbing the base. This procedure can be modified, as necessary, due to insufficient hot mix from the plant or break downs.

4-145. When the mix runs out of the finisher, take depth measurements and conduct straightedge tests to determine the dividing line between the satisfactory mix, across the entire width of the lane, and the unsatisfactory mix. Mark the dividing line with a string line that is perpendicular to the centerline. Shovel out the unsatisfactory mix down to the base, leaving a vertical edge across the line. Place heavy wrapping paper (30 by 36 inches wide) over the base, flush with the trimmed edge. Ensure that the paper is longer than the width of the lane. Replace the mix on top of the paper, rake it smooth, and roll it out. When operations restart, strip the mix and the paper from the base.

4-146. Regardless of the method used to terminate a lane, neatly cut back the pavement to a vertical edge, at the full depth, and paint the joint. Move the finisher back until the leading edge of the screed is 12 to 18 inches behind the joint, and place a small amount of the mix on the old pavement. Push the mix up to the joint with the back of a rake, and rake the fresh section so that the mix is at the proper depth and uniform in texture.

ROLLING A TRANSVERSE JOINT

4-147. On a single lane, roll the joint once with the tandem roller and check it with a straightedge. If the new section is flush or nearly flush with the old pavement, the new section will be too low after rolling. To adjust the depth, loosen the material with rakes to a depth of about 1/2 inch. Add the desired amount of material, rake it smooth, and roll it with a steel-wheel roller. If the new lane is too high after tandem rolling, loosen the material with rakes, remove the desired amount of material, and roll the pavement.

4-148. On lanes other than single lanes, make the first pass parallel to the centerline from the new surface to the existing surface with a tandem roller. Test the surface with a straightedge, and correct low and high conditions. Roll the pavement three times, parallel to the joint, with the tandem roller centered on the joint. Immediately after tandem rolling, roll the pavement parallel to the joint with the steel-wheel roller, having one rear wheel centered on the joint and the other rear wheel on the old pavement. Do not extend transverse rolling beyond 6 or 8 inches from the outside edge that will be rolled longitudinally.

CONSTRUCTING PAVEMENT ENDS

4-149. Flatten pavement ends by using trucks and other equipment. Add 6 to 8 inches of length to the pavement. When the job is finished, cut back the pavement to a neat line that conforms to the specifications and backfill it.

SECTION VII - SPECIAL MIXES

SAND ASPHALT AND TAR

4-150. In regions such as coastal areas where acceptable-quality sand is the only available aggregate, use sand mixes for economical surface courses that meet minimum requirements. They can be used for—

- Roads and streets where light, fast-moving traffic is anticipated.
- Surface and binder courses in pavements designed for low-pressure tires.
- Nontraffic areas.

4-151. Sand mixes should be well-graded to meet the specified requirements for the type of course being laid and be free from excessive amounts of foreign material. They are not suitable for airfield surface or binder courses designed for high-pressure tires or for industrial-type pavements designed for solid-rubber tires or steel wheels.

4-152. When high stability is required, improve gradation by selecting and blending locally available sand. Add mineral filler to increase the density and stability of the mix. Use AC, asphalt cutback, tar, or asphalt emulsion as a bituminous material. Hot mixes and cold-laid plant mixes are produced in a central plant; road mixes are produced with a travel plant or mixed-in-place equipment.

SHEET ASPHALT

4-153. Sheet asphalt is a refined type of sand asphalt where the grading and quality of sand and mineral filler are carefully controlled. The percentage of asphalt required is normally higher than the amount required for sand asphalt. Sheet asphalt provides a smooth, impermeable, homogeneous surface course that can be used in thin layers on an adequate base course. It is usually constructed over a binder course as a surface course in layers that are 1 1/2 to 2 inches thick. The surface may be finished to a fine, gritty, skid-resistant texture with smooth-riding, low-abrasive qualities and high uniformity. Sheet asphalt is satisfactory when subjected to the action of traffic over the entire surface. Like sand asphalt and tar, sheet asphalt is suitable for roads and streets, but it is not suitable for airfields or industrial-type pavements designed for solid-rubber tires or steel wheels.

STONE-FILLED SHEET ASPHALT

4-154. Stone-filled sheet asphalt consists of CA, well-graded sand, mineral filler, and AC. It is prepared in the same manner as sheet asphalt. The CA passes a 5/8-inch sieve but is retained on a number 8 sieve in varying quantities that do not exceed 40 percent. The percentage of CA varies proportionately when the specific gravities of FA and CA are not uniform. Stone-filled sheet asphalt is normally used as a surface course, and it is

constructed in layers that are 1 1/2 to 2 inches thick. It is widely used for surfacing roads and streets; but like sheet asphalt, it is unsuitable for use in industrial areas and airfields.

ROCK ASPHALT

4-155. Rock asphalt is composed of crushed, natural, and/or asphalt-impregnated stone (limestone, sandstone) that is used alone or mixed with extra asphalt. Depending on the type, rock asphalt can be laid hot or cold. Rock asphalt is used for surface courses only. Natural rock-asphalt deposits are located in Kentucky, Alabama, Texas, New Mexico, Oklahoma, and Utah. The nature of the aggregate and the asphalt varies in different pits. In addition, materials in the same pit can vary and they are blended to produce a uniform mix. Materials in some pits are low in asphalt content and must be enriched with extra asphalt.

4-156. The two general types of rock asphalt are blended and fluxed:

- **Blended rock asphalt.** It is prepared by blending crushed, impregnated limestone and/or sandstone in the proper proportions to produce a mix that is properly graded and meets the specified asphalt content. Grading the mix is often subordinate to balancing the asphalt content.
- **Fluxed rock asphalt.** It is prepared by blending crushed, impregnated limestone and/or sandstone with AC and/or cutter stock in a pug mill to produce a mix that is properly graded and meets the specified asphalt content. Enrichment is necessary if the rock asphalt contains insufficient asphalt to produce a satisfactory pavement.

4-157. Hot mixes are sometimes produced by heating crushed limestone that is impregnated with relatively hard asphalt (can add sand) and mixed with extra AC in the central plant. This type of mix is essentially a sand asphalt. Rock asphalt is a satisfactory surfacing material for roads and streets subjected to all-over traffic, but it has the same limitations as sand asphalt for use in airfields and industrial areas.

Chapter 5

Field Manufacture of Asphalt Cutbacks

Various types and grades of asphalt cutbacks can be manufactured in the field with standard equipment. Thinner cutbacks can be produced from the more viscous grades. Field manufacture of SC and MC, however, is more practicable than field manufacture of RC because of the rapid evaporation of gasoline from RC. Also, a greater danger of fire or explosion from the gasoline exists.

EQUIPMENT AND PRODUCTION RATE

5-1. *Table 5-1* lists the equipment used for the field manufacture of asphalt cutback. The rate of production is usually controlled by the speed that AC can be emptied from the drums and heated in the asphalt melters to suitable temperatures for pumping. The production rate for the asphalt melter is about 750 gallons per hour. *Figure 5-1*, page 5-2, shows the suggested arrangements of equipment uses in the manufacture of asphalt cutbacks. For small-scale production, use a truck- or trailer-mounted distributor or a 5,000-gallon, trailer-mounted asphalt tank with heating coils, instead of a 4,000-gallon mixing and storage tank. Arrange piping and pumping to fit each particular installation. (See *Chapter 3* for more information on the equipment used in the field manufacture of asphalt cutbacks.)

Table 5-1. Equipment Used to Manufacture Asphalt Cutback

Equipment	Function
Hot-oil heater	Used to heat bitumen.
Asphalt pumps	One asphalt pump is a portable pumping unit that transfers bituminous material from heating facilities to a storage tank, and another pump transfers the cutter stock to the mixing tank. A third pump might be required for circulating cutback in heated storage tanks to obtain even temperatures when high-viscosity materials are used. A bituminous distributor can be used as a pumping and mixing unit.
Piping equipment	Used to connect 5,000-gallon tanks with the asphalt melter, asphalt pumps, and mixing tanks.
Asphalt storage tank	Used to store bitumen.
External electric power	A 15-kW, 3-phase, 60-Hz, 230-V generator used to operate the hot-oil heater.
600-gallon pod fuel tank or 750-gallon, 2-compartment proportioning tank, 2 each	Used to hold the cutter stock.
Asphalt melter	A skid-mounted, 750-GPH, dedrumming asphalt melter with a 3,000-gallon storage capacity.
Fire extinguishers	Foam-type fire extinguishers used to extinguish fires.

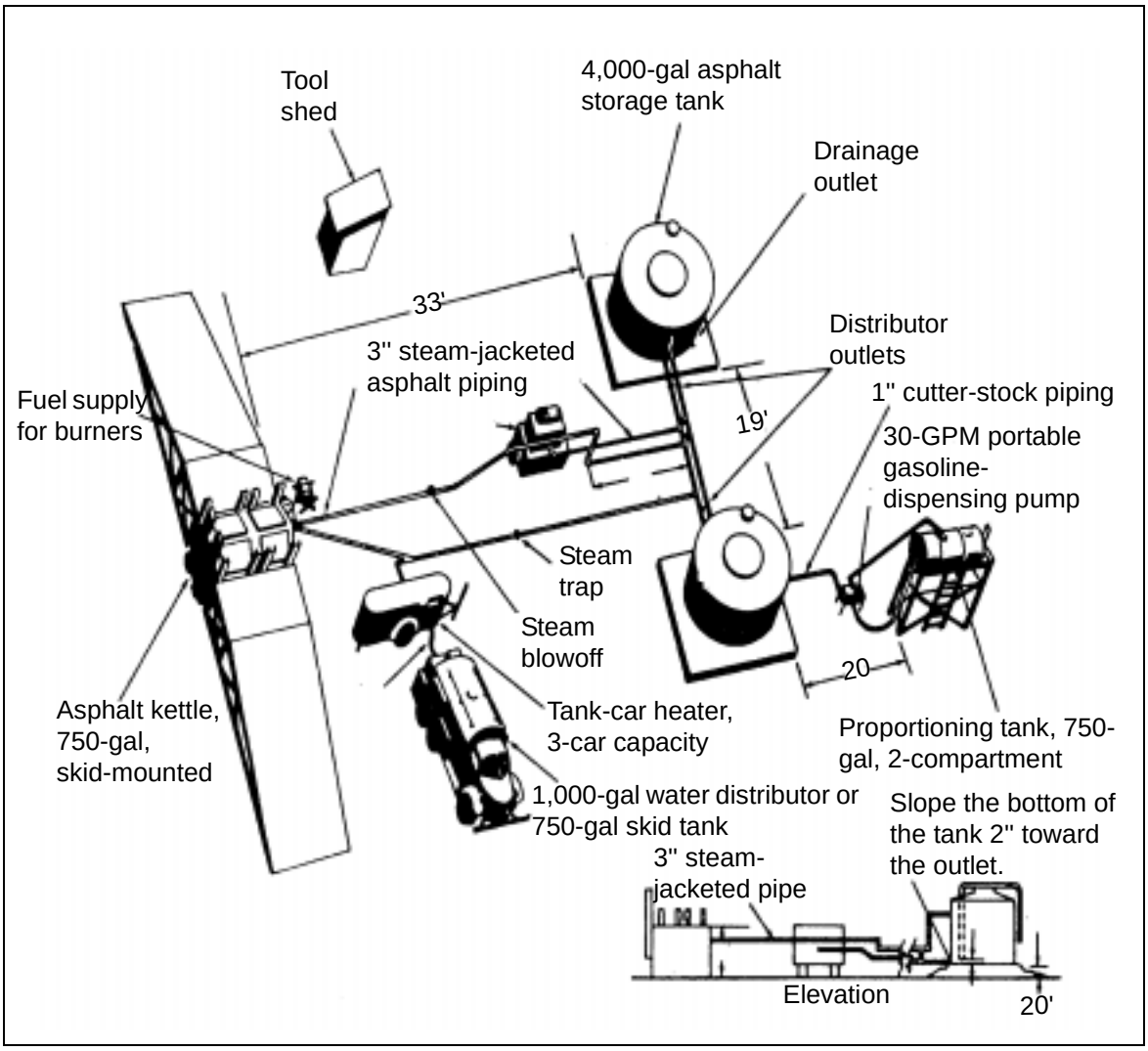

Figure 5-1. Equipment Used to Manufacture Asphalt Cutback

SAFETY

5-2. At least one safety inspector should be assigned to each operation to help personnel stay focused on their particular job. He ensures that personnel observe safety precautions within his area of responsibility. Personnel must strictly observe safety precautions when heating bitumens. They must—

- Keep foam-type fire extinguishers available at all times.
- Maintain oil heaters, storage tanks, asphalt melters, and distributors in a level position before heating.
- Never heat bitumens near buildings or flammable materials.
- Control ventilation of melters, heaters, and distributors to prevent escape of flammable vapors near flames or electrical equipment.

- Stay to the windward side of equipment to avoid excessive exposure to fumes.
- Reduce heat when foaming might cause overflow.
- Extinguish burners after bitumen has reached the temperature given in *Table 2-1*, page 2-2.
- Extinguish burners and evacuate personnel if a dense, yellow vapor rises from the asphalt melter, distributor, or storage tanks. (This indicates overheating to the extent that a spark could cause an explosion.)
- Extinguish burners before spraying bitumen from a distributor.
- Never smoke within 50 feet of any equipment. A designated smoking area should be at least 100 feet upwind of the equipment during heating operations.
- Examine all hoisting equipment daily.
- Never fill buckets or containers to the top if they will be hoisted.
- Never allow the asphalt level to fall below the fire tubes while the burners are in operation.
- Consult appropriate TMs for clean-out operations.
- Wear long-sleeve shirts, cuffless pants, fireproof gloves, heavy-soled boots, and steel combat helmets or civilian safety hats. This clothing helps protect workers if hot bitumen accidentally spills on them.

PROCEDURES

5-3. The procedures for the field manufacture of asphalt cutback are outlined below. Strictly observe the safety precautions associated with the procedures to avoid the danger of fire or explosion. See *Table 5-2* for the composition of asphalt cutback.

Table 5-2. Composition of Asphalt Cutback

Asphalt Cutback		AC		Percent of Total Volume	Percent of Cutter Stock by Volume		
Type	Grade	Penetration Grade			Gasoline or Naphtha	Kerosene or Jet Fuel	Fuel, Diesel Oil, or Similar Material
		Limits	Preferred				
RC	70	60-150	85-100	65	35		
	250			75	25		
	800			83	17		
	3,000			87	13		
MC	30			54		46	
	70	85-200	120-150	64		36	
	250			74		26	
	800			82		18	
	3,000			86		14	
SC	70			50			50
	250	120-300	200-300	60			40
	800			70			30
	3,000			80			20

DRUMS

5-4. Use special axes or cutting tools to remove the heads from asphalt drums, and inspect the contents of each drum. Eliminate drums that are contaminated with water or material that could cause foaming or fire. Take care when opening the drums to avoid serious injury, which can be caused by improper use of cutting tools.

5-5. Load the drums inside the dedrumming tunnel using an electric winch or a lifting device to pick up the drums. The Army uses different types of melters. The main difference between them is the melting capacity, which ranges from 8 to 12 drums inside the dedrumming tunnel. Heat the AC to about 250°F until it is fluid enough to pump easily. *Figure 5-2* shows a typical asphalt melter.

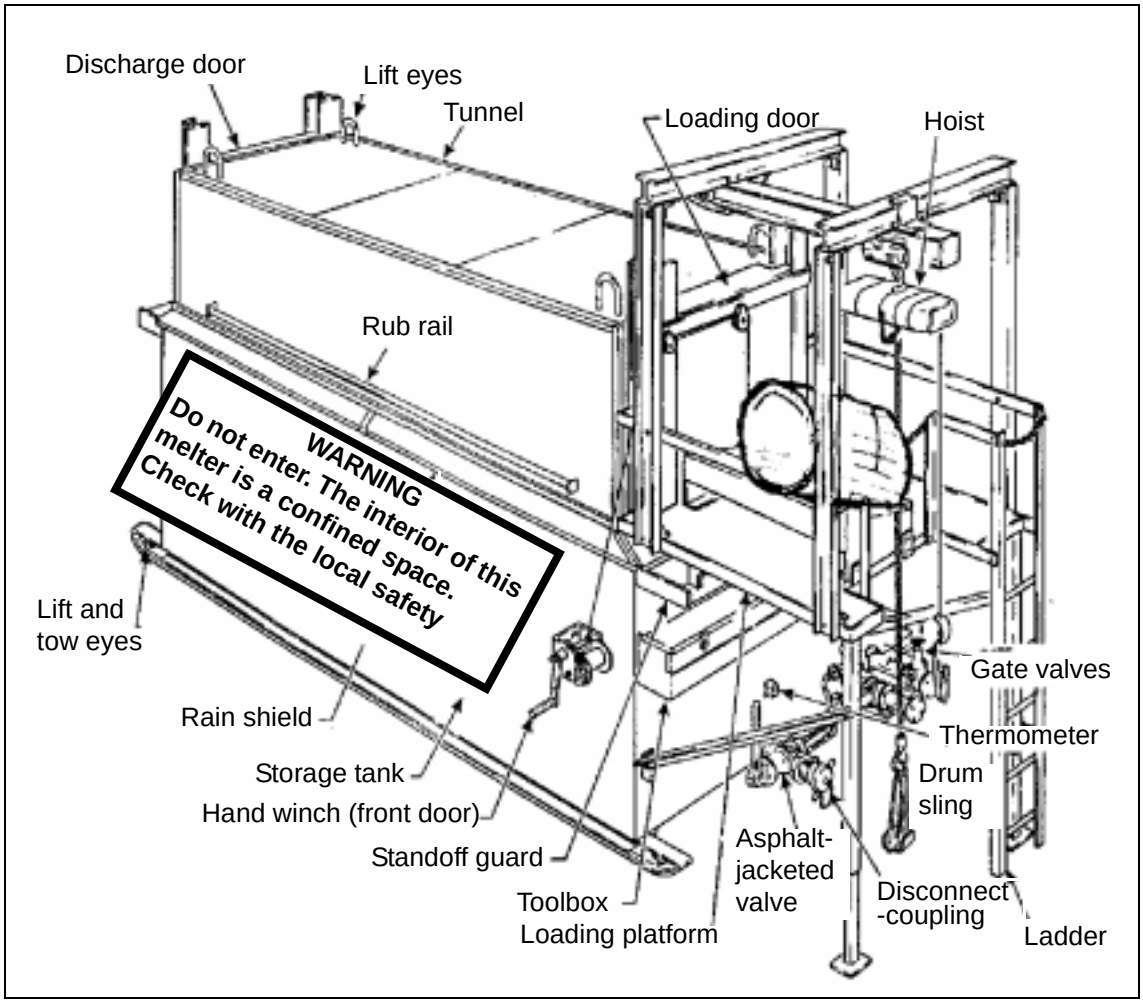

Figure 5-2. Model STMD-3000A Asphalt Melter

ASPHALT CEMENT

5-6. Once the AC (or cutback) is heated to a workable state, pump it to storage. The 5,000-gallon heated tanks are usually used as storage tanks. Use the oil-jacketed lines between the units to maintain the asphalt in the pipelines at a constant temperature that is high enough to keep the asphalt fluid.

5-7. Blow out all the lines (except oil-jacketed) that become plugged with cold asphalt. For oil-jacketed lines, heat uneducated elbows and keep oil in the jacket. If the original asphalt material cannot be delivered hot, pump it directly to the storage tanks.

5-8. Pump about 2,000 gallons of AC from the heated storage tanks to the 5,000-gallon mixing tanks. If using a distributor or a trailer-mounted tank for mixing small quantities, pump it about half full to leave space for cutter stock and the foaming action that may result when adding the cutter stock.

TEMPERATURE

5-9. Adjust the temperature in the mixing chamber between 240° and 250°F. Pump circulation accompanied by heating or atmospheric cooling will help regulate this temperature. If the temperature drops below 240°F, the AC will not be fluid enough to pump easily or mix readily with the cutter stock. At higher temperatures, much of the cutter stock will be lost in a gaseous form and a serious fire hazard will exist.

5-10. After the original material in the mixing tank is adjusted to the specified temperature, stop circulation and estimate the quantity of material in the tank. Determine the required amount of cutter stock to place in the mixing tank, and pump the desired quantity into the tank.

5-11. For best mixing results, introduce the cutter stock near the intake pipe that leads to the circulation pump. Pump the heated original material and the cutter stock through a closed system in the mixing tank. Cover the openings in the tank with wet burlap or canvas while blending cutbacks. Ensure that fire-fighting facilities are readily available.

5-12. When manufacturing cutbacks from AC, start pumping as soon as the AC is fluid enough to pump without damaging or placing a strain on the trailer-mounted asphalt pump. Ensure that the temperature is as low as possible, not to exceed 250°F because of the fire hazard. After mixing, usually about 30 minutes, pump the newly manufactured asphalt cutback to final storage.

MATERIAL REQUIREMENTS

5-13. *Table 5-2*, page 5-3, lists the composition of asphalt cutbacks. The following example shows how to calculate the combined quantities of AC and cutter stock needed for a specific type and grade of asphalt cutback:

Example: Calculate the quantity, in gallons, of AC and diesel oil that must be combined to produce 750 gallons of SC-800.

Solution: SC-800 is composed of 70 percent soft AC, with a preferred penetration of 200 to 300 and 30 percent diesel oil by volume (*Table 5-2*, page 5-3).

(0.7) (750) = 525 gallons of AC
(0.3) (750) = 225 gallons of diesel oil

5-14. The procedure for determining the proportion of cutter stock added to asphalt cutback to produce a lower (thinner) grade is outlined below. Use the data in *Table 5-2* and the following formula:

$$x = \frac{100(a-b)}{100-b}$$

where—
x = percent of cutter stock to be added to the cutback to be thinned
a = percent of cutter stock in desired cutback of lower grade
b = percent of cutter stock in cutback to be thinned

Example: Calculate the amount of kerosene and MC-800 cutback used to produce 1,000 gallons of MC-70 cutback.

Solution:

$$x = \frac{100(35-18)}{100-18}$$

x = 20.7 percent kerosene
x = 79.3 percent MC-800

To produce 1,000 gallons of MC-70, combine 207 gallons (1,000 x 0.207) of kerosene with 793 gallons (1,000 x 0.793) of MC-800.

5-15. Use the following example to calculate yield:

Example: The materials available in the field for bituminous construction include 1,000 gallons of 120 to 150 penetration AC, 750 gallons of MC-3,000, and 1,750 gallons of kerosene. Determine the following:

- How many gallons of MC-30 can be produced by combining the AC with the kerosene.
- How many gallons of MC-30 can be produced by combining the MC-3,000 with the kerosene.
- How many total gallons of MC-30 can be produced.

Solution: Determine the percentage of AC and kerosene in MC-30 by referring to *Table 5-2*. MC-30 contains 54 percent AC and 46 percent kerosene. If 1,000 gallons of 120 to 150 penetration AC represents 54 percent of the MC-30 to be produced, use the following formula to determine how many gallons of kerosene should be added to the AC:

$$\frac{\textit{percent of asphalt}}{1,000\ \textit{gallons}} = \frac{\textit{percent of kerosene}}{x}$$

$$\frac{54}{1,000} = \frac{46}{x}$$

$$x = \frac{46(1{,}000)}{54} = 851 \text{ gallons}$$

where—
x = gallons

Combining 1,000 gallons of AC and 851 gallons of kerosene produces 1,851 gallons of MC-30.

Use the following formula to determine the percent of kerosene added to MC-3,000 to produce MC-30:

$$x = \frac{100(a-b)}{100-b}$$

where—
x = percent of kerosene to add to MC-3,000
a = percent of kerosene in MC-30 (see Table 5-2, page 5-3)
b = percent of kerosene in MC-3,000 (see Table 5-2)

$$x = \frac{100(46-14)}{100-14} = \frac{3,200}{86} = 37.2 \text{ percent}$$

Use the following formula to determine the amount of MC-30 that can be produced by combining the MC-3,000 with the kerosene. The previous equation determined that 37.2 percent of the MC-30 is kerosene, so the remaining 62.8 percent is MC-3,000.

$$\frac{628}{750} = \frac{37.2}{x}$$

where—
x = amount of kerosene, in gallons, to add to 750 gallons of MC-3,000

$$x = \frac{(750)(37.2)}{62.8} = 444 \text{ gallons}$$

The amount of kerosene is as follows:

- Available = 1,750 gallons.
- Previously used = 851 gallons.
- Remaining = 899 gallons.

Since 899 gallons of kerosene are available and only 444 gallons are needed, there is enough kerosene to thin all of the MC-3,000. Add 750 gallons of MC-3,000 to 444 gallons of kerosene to make MC-30 (makes 1,194 gallons). The total amount of MC-30 that can be produced is 3,045 gallons (1,851 + 1,194).

Chapter 6

Material Estimates

To obtain a satisfactory surface, combine bituminous materials and aggregate in various proportions. Material estimates must be as accurate as possible to avoid an inadequate supply or an oversupply. Base estimates on the sequence of operations and the materials needed for each construction step. Materials should arrive at the paving site shortly before needed; keep a minimum amount of materials on hand for a full-scale operation. The formulas in this chapter use 40 gallons per barrel as a conversion factor to deal with shrinkage that takes place when the bitumen cools after barreling operations. This does not consider the loss of bitumen in debarreling operations.

PRIME COAT

6-1. Estimate the amount of bitumen required for a prime coat. Multiply the area to treat by the rate of application. The estimate must include sufficient bitumen for an additional 1-foot width on each side of the surface course constructed on the primed base. Use the following formula to calculate material requirements for a prime coat:

$$G \text{ or } B = \frac{L(W+2)R_b(1.00+H_b)}{cf}$$

where—

G = *amount of bitumen, in gallons*
B = *amount of bitumen, in barrels*
L = *length of surface, in feet (convert miles to feet)*
W = *width of surface, in feet*
R_b = *bitumen application rate, in gallons per square yard*
H_b = *handling loss factor for bitumen*
cf = *conversion factor, in square feet per square yard (use 9 for gallons and 360 [40 x 9] for barrels)*

Example: Using the above base formula, determine the amount of bitumen, in gallons, needed to complete a prime coat with the following specifications:

L = *3 miles (3 x 5,280 = 15,840 feet)*
W = *23 feet*
R_b = *0.3 gallon per square yard*
H_b = *5 percent*

Solution:

$$G = \frac{15,840(23+2)(0.3)(1.00+0.05)}{9} = \frac{15,840(25)\times(0.3)(1.05)}{9}$$

$$G = \frac{124,740}{9} = 13,860 \text{ gallons}$$

TACK COAT

6-2. The procedure for estimating the bitumen requirement for a tack coat is similar to that for a prime coat. A tack coat is generally applied over the proposed width of the pavement. Use the following formula to calculate material requirements for a tack coat:

$$G \text{ or } B = \frac{LWR_b(1.00+H_b)}{cf}$$

where—

G = *amount of bitumen, in gallons*
B = *amount of bitumen, in barrels*
L = *length of surface, in feet (convert miles to feet)*
W = *width of surface, in feet*
R_b = *bitumen application rate, in gallons per square yard*
H_b = *handling loss factor for bitumen*
cf = *conversion factor, in square feet per square yard (use 9 for gallons and 360 [40 x 9] for barrels)*

Example: Using the above base formula, determine the amount of bitumen, in barrels, needed to complete a tack coat with the following specifications:

L = *2.7 miles (2.7 x 5,280 = 14,256 feet)*
W = *23 feet*
R_b = *0.5 gallon per square yard*
H = *5 percent*

Solution:

$$B = \frac{14,256(23)(0.5)(1.00+0.05)}{360} = \frac{163,944(1.05)}{360}$$

$$B = \frac{172,141}{360} = 478 \text{ barrels}$$

SURFACE TREATMENT

6-3. The amount of bitumen needed for a surface treatment is determined the same way as a tack coat. Multiply the results by the number of treatment passes. In bituminous surface treatments, determine the quantities of bitumen and aggregate needed using a test strip. Use 1 gallon of bitumen for every 100 pounds of aggregate. Determine the weight of the aggregate, one stone in depth, required to cover 1 square yard by spreading the aggregate over a measured surface, weighing it, and computing the amount in pounds per square yard. Use the following formula to calculate material requirements for a surface treatment:

$$P \text{ or } T = \frac{LWR_a(1.00 + H_a)}{cf}$$

where—

P	=	*aggregate weight, in pounds*
T	=	*aggregate weight, in tons*
L	=	*length of surface, in feet*
W	=	*width of surface, in feet*
R_a	=	*aggregate application rate*
H_a	=	*handling loss factor for aggregate*
cf	=	*conversion factor, in square feet per square yard (use 9 for pounds and 18,000 for tons)*

Example: A test strip with an area of 100 square yards was used to determine the quantities required for a single surface treatment. Materials were carefully controlled and handling losses were negligible. The materials used for the test strip were 1.5 tons of aggregate and 30 gallons of bitumen. Expect an aggregate handling loss of 10 percent and a bitumen handling loss of 5 percent. Determine the amount of aggregate, in tons, and the amount of bitumen, in barrels, needed to make a single surface treatment on a road that is 23 feet wide and 10 miles (52,800 feet) long.

Solution: Determine the aggregate application rate.

$$R_a = \frac{(1.5 \text{ tons})(2,000 \text{ pounds per ton})}{100 \text{ square yards}} = 30 \text{ pounds per square yard}$$

Calculate the amount of aggregate needed for the project (round up the amount).

$$T = \frac{(52,800)(23)(30)(1.00 + 0.10)}{18,000} = \frac{(36,432,000)(1.10)}{18,000} = \frac{40,075,200}{18,000}$$

$$T = 2,227 \text{ tons}$$

Determine the bitumen application rate.

$$R_b = \frac{30 \text{ gallons}}{100 \text{ square yards}} = 0.3 \text{ gallons per square yard}$$

Calculate the amount of bitumen needed for the project (round up the amount).

$$B = \frac{LWR_b(1.00 + H_b)}{cf} = \frac{(52,800)(23)(0.3)(1.00 + 0.05)}{360} = \frac{382,536}{360}$$

$$B = 1,063 \text{ barrels}$$

PENETRATION MACADAM

6-4. Determine the amount of bitumen needed for a penetration macadam the same as a tack coat. The approximate bitumen application rate is 0.75 gallon per square yard per inch of compacted thickness.

Example: A 2-inch compacted thickness requires 1.5 gallons per square yard. To determine the loose volume of aggregate, multiply the area by the compacted thickness of the aggregate and the compaction factor. (The compaction factor is the ratio of the volume of loose aggregate to the volume of compacted aggregate.) The compaction factor for a 4-inch, loose layer of aggregate compacted to 2 inches is 2. If a 2-inch compacted thickness is desired and the compaction factor is 1.5, the loose thickness is 3 inches (1.5 x 2 inches). When determining the compaction factor in the field, consider the angularity and roughness of the aggregate, the loose thickness of the layer, and the weight of the roller. Compaction factors normally vary from 1.2 to 1.5. Use the following formula to calculate material requirements for a penetration macadam:

$$V = \frac{LW(FPT)(CF)(1.00 + H_a)}{cf}$$

where—

V = *loose volume of aggregate, in cubic yards*
L = *length of surface, in feet*
W = *width of surface, in feet*
FPT = *finished pavement thickness, in inches (after compaction)*
CF = *compaction factor or ratio of loose depth to FPT*
H_a = *aggregate handling loss factor*
cf = *conversion factor 324 (36 inches per yard x 9 square feet per square yard)*

Determine the amount of bitumen, in barrels, and the amount of loose aggregate, in cubic yards, needed to complete a penetration macadam with the following specifications:

L = *2 miles (10,560 feet)*
W = *23 feet*
FPT = *3 inches*
CF = *1.5*
R_b = *2.3 gallons per square yard*
H_a = *10 percent*
H_b = *5 percent*

Solution: Determine the amount of bitumen, in barrels, needed for the project (round up the amount).

$$B = \frac{LWR_b(1.00 + H_b)}{cf} = \frac{(10,560)(23)(2.3)(1.05)}{360} = \frac{586,555.2}{360} = 1{,}630 \text{ barrels}$$

Determine the amount of loose aggregate, in cubic yards, needed for the project (round up the amount).

$$V = \frac{(10,560)(23)(3)(1.5)(1.00 + 0.10)}{324} = \frac{1,202,256}{324} = 3,711 \text{ cubic yards}$$

ROAD MIX

6-5. Estimate the amount of aggregate needed for a road mix the same as a penetration macadam. Use the modified Marshall method *(Chapter 2*) to determine the amount of bitumen needed. The bitumen application rate is about 0.5 gallon per square yard for each compacted inch of pavement. (The application rate is based on the use of a well-graded aggregate with a 1-inch maximum particle size.)

Example: Determine the amount of bitumen, in barrels, and the amount of loose aggregate, in cubic yards, needed to complete a road mix with the following specifications:

L = *1.1 miles (1.1 x 5,280 = 5,808 feet)*
W = *23 feet*
FPT = *2 inches*
CF = *1.3*
R_b = *0.5 gallons per square yard per inch of compacted pavement*
H_a = *10 percent*
H_b = *5 percent*

Solution: Determine the amount of bitumen, in barrels, needed for the project (round up the amount). Based on the above information, use 1 gallon per square yard (0.5 x 2 inches [FPT]) for this project.

$$B = \frac{LWR_b(1.00 + H_b)}{cf} = \frac{5,808(23)(1.0)(1.05)}{360} = \frac{140,263.2}{360} = 390 \text{ barrels}$$

Determine the amount of loose aggregate, in cubic yards, needed for the project (round up the amount).

$$V = \frac{LW(FPT)(CF)(1.00 + H_a)}{cf} = \frac{5,808(23)(2)(1.3)(1.10)}{324}$$

$$V = \frac{382,050.24}{324} = 1,180 \text{ cubic yards}$$

PLANT MIX

6-6. Determine the amount of plant mix required for the pavement. Multiply the compacted volume (cubic feet) using the unit weight of the mix in pounds per cubic foot. The unit weight is determined by the Marshall method as described in *FM 5-472*. If the exact unit weight of the plant mix has not been determined, use an estimated weight of 150 pounds per cubic foot. (Unit weight is usually between 140 and 150 pounds per compacted cubic foot.) Use the following formulas to calculate the amount of mix needed:

- If the unit weight of the plant mix is known—

$$T = \frac{(LW)(FPT)(UW)}{cf}$$

- If the unit weight of the plant mix is unknown—

$$T = \frac{(LW)(FPT)}{cf}$$

where—

T = weight of plant mix, in tons
L = length of area, in feet
W = width of area, in feet
FPT = finished pavement thickness, in inches (after compaction)
UW = unit weight of plant mix, in pounds per cubic foot
cf = conversion factor. If the unit weight of the plant mix is known, use 24,000 (2,000 pounds per ton x 12 inches per foot). If the unit weight of the plant mix is unknown, use 160 (24,000/150 [maximum unit weight normally encountered])

Example: A 110- by 650-foot parking lot requires 2 inches of plant mix. Determine the amount of plant mix, in tons, needed for this project if the unit weight of the plant mix is 147 pounds per cubic feet.

Solution: Since the unit weight of the plant mix is known, use the first base formula (round up the amount).

$$T = \frac{(LW)(FPT)(UW)}{cf} = \frac{(650)(110)(2)(147)}{24,000} = \frac{21,021,000}{24,000} = 876 \text{ tons}$$

6-7. Determine the proportion of each plant-mix component.

Example: The required amount of plant mix for the project is 800 tons. The aggregate blend is 50 percent CA, 40 percent FA, and 10 percent mineral filler. The bitumen content is 6 percent (calculated as a check for this example). Determine how many tons of each component is needed.

Solution: Determine the percent of each aggregate in the mix by multiplying its blend percentage from the above paragraph by 0.94, which is the total aggregate percent by weight (100 - 6 [bitumen content]).

CA = 47 percent of the total mix (0.94 x 50)
FA = 37.6 percent of the total mix (0.94 x 40)
Mineral filler = 0.094 percent of the total mix (0.94 x 10)

Multiply the required tonnage of the plant mix (800) by the percentage of each component of the mix. Adjust the results, if necessary, so that the total amount of the components equals the required tonnage of the plant mix.

CA = 376 tons (800 x 0.470)
FA = 300.8 tons (800 x 0.376)
Mineral filler = 75.2 tons (800 x 0.094)
Bitumen = 48 tons (800 x 0.060)
Total = 800 tons

MILEAGE REQUIREMENTS

6-8. Determine the number of miles of surfacing that can be constructed with a given amount of bitumen and aggregates. Compute the amount required for 1 mile using the appropriate formula in this chapter. Divide the results into the amount of available materials. In the following example, the aggregate is the controlling factor:

Example: Use the following specifications to calculate how many miles of single surface treatment can be applied on a road:

W = *23 feet*
R_a = *20 pounds per square yard*
G = *30,000 gallons*
T = *1,500 tons of available material*
R_b = *0.2 gallon per square yard*
H_a = *10 percent*
H_b = *5 percent*
T_1 = *tons of aggregate per mile*
G_1 = *gallons of bitumen per mile*

Solution: Using the base formula for a surface treatment, determine how many tons of aggregate are needed for 1 mile of surface.

$$T_1 = \frac{LWR_b(1.00 + H_a)}{cf} = \frac{(5{,}280)(23)(20)(1.10)}{18{,}000} = \frac{2{,}671{,}680}{18{,}000} = 148.4 \text{ tons per mile}$$

Calculate how many miles of surface can be treated with the available aggregate.

$$\text{Miles of available aggregate} = \frac{T}{T_1} = \frac{1{,}500}{148.4} = 10.1 \text{ miles}$$

Using the base formula for a tack coat, calculate how many gallons of bitumen are needed for 1 mile of surface.

$$G_1 = \frac{LWR_b(1.00 + H_b)}{cf} = \frac{(5{,}280)(23)(0.20)(1.05)}{9} = \frac{25{,}502.4}{9}$$

$$G_1 = 2{,}833.6 \text{ gallons per mile}$$

Calculate how many miles of surface can be treated with the available bitumen.

$$\text{Miles of available bitumen} = \frac{G}{G_1} = \frac{30{,}000}{2{,}833.6} = 10.6 \text{ miles}$$

The smallest number always governs; therefore, 10.1 miles is the maximum length of road that can be surfaced using the available materials.

Chapter 7

Maintaining and Repairing Bituminous Wearing Surfaces

The maintenance and repair of roads and airfields are particularly important because of increased mobility in modern warfare. Damage caused by the weight of heavy loads, the abrasive action of military traffic, and combat conditions must be repaired as quickly as possible. The repairs are often made under adverse conditions, such as shortages of manpower, material, equipment, and time and the possibility of an attack. Continuous maintenance cannot be overemphasized; small repairs made immediately are much cheaper than major repairs made at a later date.

PRINCIPLES

7-1. For effective results, the cause of a failure must be corrected. If surface repairs are made without correcting a defective subgrade or base, the damage will reappear and repairs can be more extensive. Also, a minor maintenance job that is postponed can develop into a major repair job involving the subgrade, the base, and the wearing surface. Repairing the surface without correcting the base is justifiable only as a temporary measure to meet immediate needs under combat or other urgent conditions.

7-2. Ensure that the maintenance and repair of a surface conform as closely as possible to the original specifications for strength, appearance, texture, and design. Ignoring the original specifications can mean recurring maintenance on areas that are below standard, and differences in wear and traffic impact may result from spot strengthening.

7-3. The priority for maintenance and repair depends on tactical requirements, traffic volume, and hazards that can result from failure of the paved area. For example, roads used to support tactical operations should have priority over less essential facilities. A single pothole in a heavily used road that is in excellent condition otherwise should have priority over a less used road that is in poor condition.

MATERIALS

7-4. Use any stable material for temporary repairs in combat areas or in areas where suitable material is unavailable and the area must be patched to keep traffic moving. Use good-quality soils and masonry or concrete rubble for this purpose. Ensure that patches are thoroughly compacted and constantly maintained. Permanently patch the area as soon as possible.

7-5. Blade the shoulders to facilitate rainwater drainage from the surface, and fill in ruts and washouts. Grade the shoulder material flush against the

pavement edges to restrict water seepage to the subgrade and to prevent the pavement edge from breaking under traffic. Replace material that is displaced from the shoulders with new material as required.

7-6. Successful repair with bituminous materials is more likely in warm, dry weather. When breaks occur during cold weather, repair them on a temporary, expedient basis to prevent progressive failures until the weather conditions allow more permanent repairs. Eliminate frost and moisture from the area with surface heaters or blowtorches.

INSPECTIONS

7-7. Maintenance inspections detect early evidence of defects before failure occurs. Frequent inspections and follow-up procedures prevent minor defects from becoming serious and developing into major defects. Inspections are particularly important during rainy seasons and spring thaws and after heavy storms. When inspecting surface defects, look for the causes of the defects. Inspect the drainage systems to ensure that debris is not obstructing drainage channels and structures.

7-8. Inspect dams for debris and excessive erosion, and investigate water remaining on surface areas or adjacent to surface areas. Conduct drainage inspections during every storm or immediately afterward. Inspect surface areas in late fall to prepare for winter, and inspect them again in the spring. In most cases, adequate inspections result in repairs being made only to the surface.

CAUSES OF FAILURE

7-9. A bituminous wearing surface depends on the base for its load-carrying capacity. If the subgrade or base course fails, the wearing surface that lies directly above the weakened area will also fail. Inadequate drainage, frost action, unsatisfactory compaction, unsatisfactory materials, or overloading may cause a base to fail. Disintegration or decomposition of the surface may be the result of a hardened bituminous film, insufficient bitumen, or bitumen stripping:

- **Hardened bituminous film.** Continuous exposure to the weather slowly hardens bitumen, causing it to lose resilience and become brittle. The asphalt film starts to harden when the bitumen is applied, and the process continues during the entire life of the surface. This process is usually referred to as *oxidation*. To anticipate failure from oxidation, estimate the yearly decrease in penetration residue (oxidation rate) and check the surface periodically. For example, material with an initial penetration residue of 60 is expected to harden in a temperate climate as shown in *Table 7-1*. If the oxidation rate remains above 30, failure from oxidation is unlikely to occur. A rate of less than 20 indicates that the pavement is brittle and will crack, ravel, and disintegrate.

Table 7-1. Example of Oxidation Rate

Period	Percent of Loss	Rate of Oxidation
Placement	20	48
End of first year	10	42
End of second year	10	36
End of third year	5	33

- **Insufficient bitumen.** Insufficient bitumen can cause a surface to disintegrate. A poorly designed mix, unsatisfactory proportioning of aggregate and bitumen, or inadequate mixing results in insufficient bitumen.
- **Bitumen stripping.** Water can cause the asphalt film to separate from the surface of the aggregate, resulting in surface failure. If the aggregate absorbs too much water, the aggregate and the bitumen may separate. Other causes of bitumen stripping are unsuitable or insufficient bitumen and/or inadequate mixing. Bitumen may also be stripped by dirty aggregate or be cut away by a petroleum distillate.

7-10. An unstable wearing surface cannot withstand deformation under the impact of traffic. Some causes of instability are—

- Excess or soft bitumen.
- Smooth aggregate.
- Low density (insufficient compaction).
- Unsuitable mix design.
- Poor gradation of aggregates.
- Unsatisfactory placement.
- Uncured prime.
- Excess tack coat or overpriming.
- Dirt between the surface and the base.

7-11. Bombing, shelling, or other enemy combat action may cause surface failure. A nuclear airburst may harden or disintegrate a bituminous wearing surface. Continuous use of bituminous-paved airfields by jet aircraft is likely to burn or scorch the surface, causing pavement failure.

TYPES OF FAILURE

7-12. There are several types of surface failure. They are discussed in the following paragraphs:

POTHOLES

7-13. Potholes are the most frequent type of failure found in bituminous wearing surfaces. They may be caused by defective drainage, frost action in the base, settlement of the base, or heavy traffic. A small pothole may be surrounded by a large area that is progressively failing. Repair a pothole with a hot or cold premix patch or a penetration patch. If a large area has several

potholes, rework or replace the entire paving system with the same type of bituminous material that was used in the original pavement.

RAVELING

7-14. Raveling occurs when the bond breaks down between the aggregate and the bitumen. The damage starts at the top and disintegrates the surface. Raveling is frequently caused by brittle bitumen that can no longer bind the aggregate together. Repair raveling by applying a skin patch or a seal coat.

CRACKING

7-15. Surface cracking first appears as minute hairline cracks that are visible only under careful scrutiny. The cracks run lengthwise and appear to be more numerous toward the edge of the traveled area. Surface water may seep through the cracks to the base, causing base failure and potholes. Perform the following procedures when repairing cracks:

- Clean cracks with compressed air.
- Fill cracks that are wider than 1/8 inch with a lean sand-asphalt mix of 2 to 3 percent MC-250, RC-250, or RT-2 and fine-graded sand. Fill infrequent, small cracks with RC-70, RC-250, RT-6, RS-1, or RS-2.
- Place sand-asphalt mix into the cracks until they are full, and tamp the mix with a spading tool.
- Seal filled cracks with RC-70, RC-250, or RT-6 and cover them with sand.
- Apply a sand seal when surface cracks and checks are so extensive that water seeps through them into the base course and endangers the pavement. Clean the pavement thoroughly, and apply bituminous material (maximum 3 gallons per square yard). Apply an even coat of clean, dry sand over the bitumen and roll the surface until the sand is well set. Do not open the area to traffic until the bituminous seal has set and will not pick up under traffic.

RUTTING AND SHOVING

7-16. Instability may cause rutting and shoving of a wearing surface. Correct defects caused by too much cutter stock in the bitumen by blading the material from one side of the strip to the other until the volatile substances evaporate. If a cold mix has excess bitumen, add new aggregate and mix it until the bitumen is evenly distributed. Then, reshape and reroll the mix and apply a seal coat. If excess bitumen is present in a hot mix, remove and replace the affected area. Correct weaknesses of the base by reworking the subbase.

CORRUGATION

7-17. Corrugation frequently occurs when the bond between the surface and the underlying course has been broken. The causes of corrugation are the same as discussed in paragraph 7-16, so correcting the problem is also the same. Repair a corrugated surface by removing the surface, reconditioning and priming the base, and applying a new surface treatment.

BURNED AREAS

7-18. Bituminous materials become brittle and lifeless if they are burned or overheated during the mix process. Remove and replace the full depth of the pavement course that was constructed from such material.

BLEEDING

7-19. During hot weather, bituminous surfaces frequently bleed (secrete bitumen). Bleeding causes a slippery condition that is hazardous to traffic, and it can also cause the surface to become rutted and grooved. Remedy this condition as quickly as possible. If bleeding is caused by excess bitumen or inadequate curing, replace or rework the wearing surface. As an expedient method for light bleeding, apply a light, uniform coat of FA or coarse sand. Use a light drag to uniformly spread the aggregate (several applications may be necessary). Roll the pavement, if possible, or allow traffic to compact the aggregate. For expedient repair of heavy bleeding, perform the same procedures but use CA.

SETTLEMENTS AND DEPRESSIONS

7-20. If a settlement is caused by failure of a pipe, a culvert, or a supporting wall, repair the structure before repairing the pavement. A minor settlement or depression can be repaired with a surface treatment. Mark the edge of the failure with chalk or paint. Thoroughly clean the surface of the pavement within the marked area, and apply a tack coat of not more than 0.1 gallon per square yard. Use patching material that is similar in character and texture to that in the adjacent pavement. Place, rake, and roll the patching material. Repair a large settled area with one or more applications of bituminous material on top of the existing surface, or remove the surface course and bring the base up to proper grade. Under suitable weather conditions, blade the bituminous surface to one side of the affected area, readjust the base, and repave the area.

PATCHES

7-21. The types of patches used to repair bituminous wearing surfaces are premixed patches, penetration patches, skin patches, and seal coats (surface treatment). If the damage is extensive, rework and replace the entire paving system.

PREMIXED PATCH

7-22. A hot or cold mix can be used for a premixed bituminous patch. If small quantities cannot be obtained locally, prepare the mix on the job. Hot mixes prepared at a central plant are normally used for extensive repair. Hot mixes can be used with less delay from inclement weather, and hot patches can be opened to traffic in a shorter time. New cold patches displace easily under traffic before the volatile substances have evaporated. Hot patches have a longer life and less tendency to ravel at the edges. Prepare hot patching material according to the instructions in *Chapter 4*.

7-23. Cold-mix patches can be made with minimum equipment if materials are carefully selected and the mix is properly processed and stored. Cold mixes can be premixed and stockpiled. Many cold mixes are adapted to use local materials. Where tar is available, mixes using aggregate gradation II-1 and 14 to 16 gallons of RTCB-5 or RTCB-6 for each loose cubic yard of aggregate are satisfactory. These mixes remain usable after several months of storage.

7-24. For most cold patches, dry aggregate is needed for a satisfactory mix. Damp aggregate frequently reduces the life of the patch unless emulsions are used. With some emulsions, too much moisture in the aggregate may still be detrimental. During the summer months, sun-dried aggregate is usually satisfactory. In unfavorable weather, dry the aggregate with small, portable dryers. A small quantity of aggregate can be dried by heating it in a pan over an open fire and turning it frequently to hasten drying. Covered storage is desirable for small quantities of dry aggregate.

7-25. *Table 7-2* lists aggregate gradations for the following types of bituminous patching mixes:

- **Dense-graded plant mixes.**
  - Long storage. These mixes are made with SC-800 or MC-250 at a rate of 3.5 to 7 percent by weight of dry aggregate. They can be stored for many months and are satisfactory for temporary roads and temporary patching of heavily traveled surfaces.
  - Short storage. These mixes are made with MC-800 or MC-3,000 and RT-7 to RT-12 at the rate of 3.5 to 7 percent by weight of dry aggregate. They stiffen rapidly but can be stored for several weeks during hot weather.
- **Open-graded plant mixes.** These mixes are made with RC-800, RC-3,000, RS-1, MC-250, and RT-7 to RT-12 at the rate of 3 to 5 percent by weight of dry aggregate. They cure within 6 to 20 hours under average weather conditions and cannot be stored very long.

Table 7-2. Aggregate Gradation for Bituminous Patching Mixes

Sieve	Percentage Passing							
	Dense-Graded (Long Storage)				Dense-Graded (Short Storage)		Open-Graded	
	Gradation				Gradation		Gradation	
	I-1	I-2	I-3	I-4	II-1	II-2	III-1	III-2
1 inch							100	
3/4 inch	100	100			100		90-100	
1/2 inch	85-95	85-95	100	100	80-85	100	60-85	100
3/8 inch	75-85	75-90	85-90	85-95	65-75	80-85	30-65	85-100
No. 4	50-70	55-75	55-75	60-80	35-50	40-55	5-25	10-30
No. 8	40-60	40-60	45-65	50-70	25-90	30-45	0-5	0-10
No. 16	35-60	35-50	35-60	40-55	20-35	25-40		
No. 200	5-10	5-12	5-10	5-12	2-7	2-7		

Preparing Cold Mix

7-26. The gradation of aggregates and the amount of bitumen used when preparing a patching mix are very important. If the ingredients are not accurately proportioned, the patch may shove or ravel and break down in a short time. Because aggregates vary greatly in quality and grading, the quantity of bitumen used in the mix fluctuates. FA or dense gradation requires more bitumen to coat the increased surface area in a given volume. Use about 2 quarts of bituminous material per 1 cubic foot of most crushed stone; more bitumen is needed for fine sand. For any gradation, a dull black color with all particles coated indicates the correct bitumen content for the mix. When the mix is thrown into a pile, the particles should slowly roll over each other or creep.

7-27. An asphalt kettle or a bituminous distributor is normally used to heat, transport, and apply bituminous material. Ensure that the thermometer on the kettle is accurate, and heat the bitumen to the mixing or spraying temperature listed in *Table 2-1*, page 2-2. Observe all safety precautions for heating bituminous materials. Constantly agitate the bituminous material during the heating process by using a pump attached to the equipment or by stirring it. For surface patching, bituminous material can be accurately distributed with a hand sprayer. Distribute bitumen from pouring pots only when filling cracks. If the use of pouring pots for surface patching is necessary, broom the tile application for uniform coverage.

7-28. A pug mill or a similar mixer provides the best results for cold mixes. If a pug mill is unavailable, blend a workable mix with open-graded aggregates in a mortar mixer. Another method is to spread aggregate on an abandoned section of pavement, apply bitumen with a distributor, and mix the materials with a motor grader. Use or stockpile the mix immediately. For small quantities of open-graded mix, use a shovel to blend the materials.

Repairing a Pothole

7-29. For best results, patches should have the same density and shed water as effectively as the surrounding area. The area below the surface normally requires hand-tamping. Ensure that successive layers of patching material are not more than 3 inches deep. To repair a pothole or a burned area, follow the instructions below:

- Prepare a cold mix as directed in paragraphs 7-26 through 7-28.
- Mark off the pothole area, including all the surrounding weak material (see *Figure 7-1*, page 7-8).
- Remove the damaged area (*Figure 7-2*, page 7-8), including base material that may be weak. Cut a rectangular hole with vertical edges to hold the patching material against the flow of traffic. Remove all loose and defective material. When placing a patch adjacent to the shoulder of a road or airfield, key the patch to the shoulder.

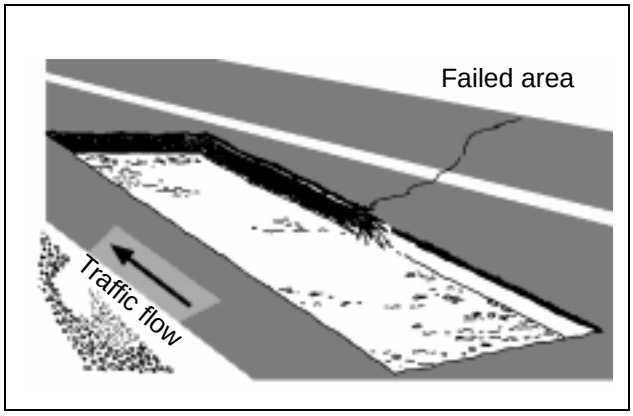

Figure 7-1. Removal of Material From a Failed Area

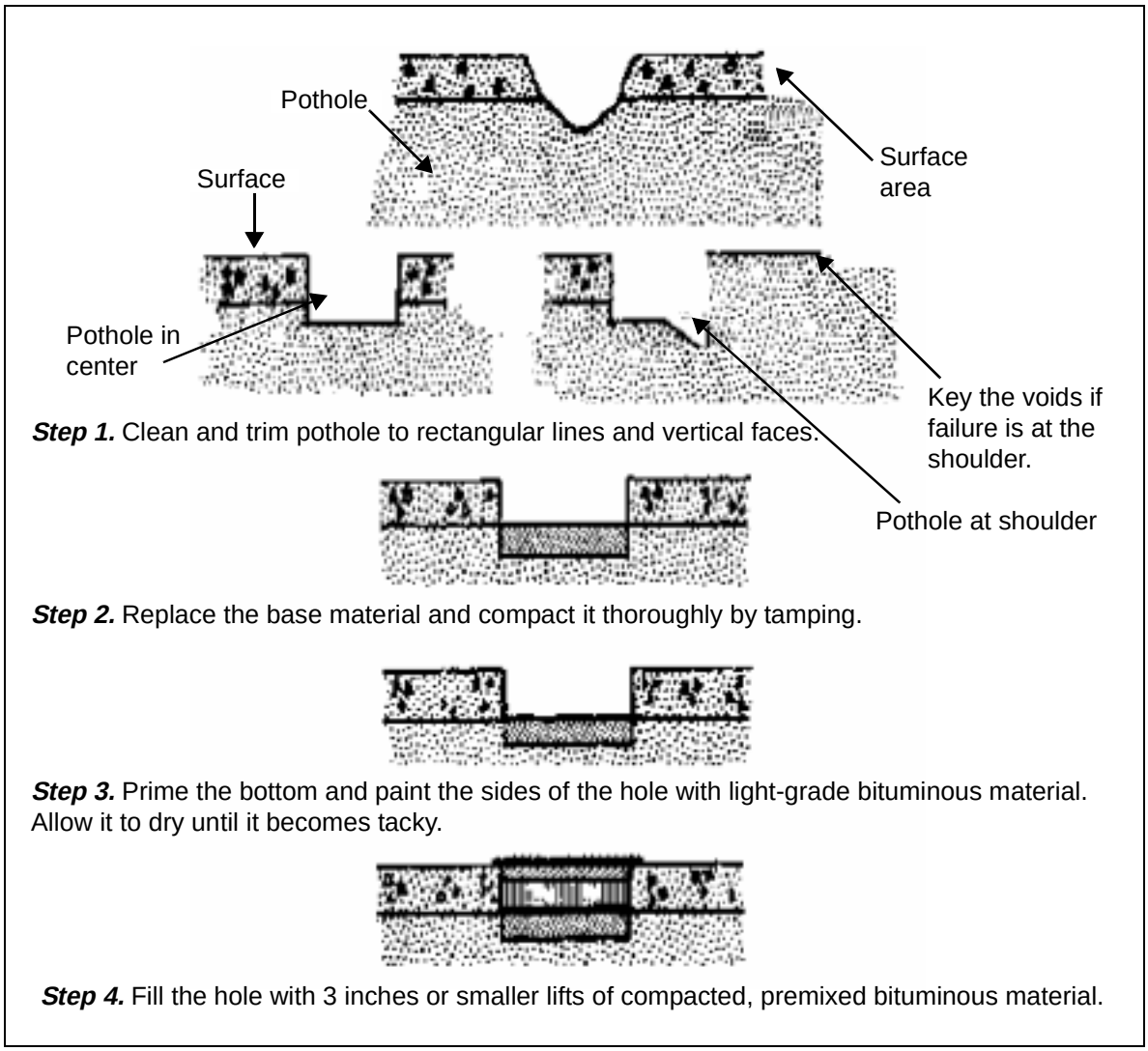

Figure 7-2. Pothole Repair

- Replace the base by refilling the bottom of the hole with thin layers of new base material (3/4-inch crushed stone); thoroughly tamp each layer. If the wearing surface is more than 2 inches thick, fill the pothole even with the bottom of the wearing surface. If the wearing surface is less than 2 inches thick, fill the pothole to within 2 inches of the top.
- Apply a light tack coat (RC-2, RC-3, or RC-4) on the new base material, on the sides of the hole, and around the edges of the hole. The tack coat provides a bond between the new base material and the patching mix. Ensure that the tack coat is sticky before placing the patching mix.
- Shovel premixed materials into place for hand-patching. Do not dump or drop the materials because doing so produces a compacted area that must be turned or moved to obtain a uniform texture. Slightly rake the patch to level it, and use heavy raking to featheredge the patch. Push coarse material toward the center of the patch with the back of a rake. For small surface applications, spread the aggregate with shovels as evenly as possible. Slightly sweep or rake the material for uniform application. Compact bituminous patches to obtain the required density, and seal the aggregate. For small repairs where using power rollers is impracticable or for large repairs that are inaccessible to power rollers, hand-tamp the patch and leave a slight crown for further compaction.
- Sprinkle the top of the patch with wet sand to prevent the roller and the traffic from picking up the mix while it is hardening. Compact the patch with tamps or rollers or by slowly driving a truck over it.

PENETRATION PATCH

7-30. A penetration patch is made with macadam aggregate and hot bitumen. It is essentially the same as the mix used for penetration-macadam pavement. To repair a pothole with a penetration patch—

- Cut out the failure according to the procedures for premixed patches (paragraph 7-29).
- Place, compact, and lightly tack layers of suitable base material into the hole. Tamp a layer of CA (broken stone or slag, 3-inch maximum size) into the hole over the base material. If using hot bitumen, ensure that the aggregate is uniform (not graded from coarse to fine). Use *Table 2-2*, page 2-4, as a guide for aggregate gradations.
- Use crushed aggregate because the strength of a penetration patch depends on the aggregate particles interlocking. The bonding qualities of the bitumen are secondary in importance. The preferred bitumen is RC-3,000, but AC (85 to 100 penetration) or RT-12 is acceptable. The bitumen application rate is 1 gallon per square yard for the first inch and 0.5 gallon per square yard for each additional inch. Heat and apply the bitumen according to the procedures for premixed patches (paragraph 7-27). Avoid using excess bituminous material in a penetration patch.

7-31. After applying bitumen, key and choke the voids in the first layer of macadam aggregate with the intermediate aggregates according to the procedures in *Chapter 4*. Fill the hole completely, and leave the final surface of the patch slightly mounded to allow for compaction by traffic.

7-32. An RS-1 emulsified asphalt can be used to make a modified penetration patch that is less than 2 inches thick. The procedures are similar to those for a penetration patch. *Table 7-3* lists materials to use for successive operations. Do not open a modified penetration patch to traffic until it is thoroughly cured.

Table 7-3. Amount of Materials (Per Square Yard) for Penetration Patches

Compacted, Finished Thickness (Inches)	RS-1 Prime Coat (Gallons)	CA		RS-1 First Penetration Application	Intermediate Aggregate		RS-1 Second Penetration Application (Gallons)	FA No. 4 to No. 16 (Pounds)	RS-1 Seal Coat Application (Gallons)	Cover Aggregate No. 4 to No. 80 (Pounds)	Minimum Total Aggregate (Pounds)	Minimum Total Emulsified Asphalt (Gallons)
		Particle Size	Pounds		Particle Size	Pounds						
1 1/2	0.20-0.30	1 1/2 to 3/4 in	110-130	0.50-0.60	1 1/2 in to No. 8	20-30	0.60-0.70	10-15	0.25-0.35	8-12	150	1.55
1 1/4	0.20-0.30	1 to 3/8 in	75-90	0.40-0.50	3/8 in to No. 8	15-25	0.50-0.60	10-15	0.25-0.35	8-12	125	1.35
1	0.20-0.30	3/4 to 3/8 in	50-60	0.30-0.35	3/8 in to No. 8	15-25	0.45-0.50	10-15	0.25-0.35	8-12	100	1.20
3/4	0.20-0.30	3/4 in to No. 4	35-45	0.30-0.35	No. 4 to 16	15-25	0.35-0.50	10-15	0.25-0.35	8-12	75	1.10

SKIN PATCH

7-33. A skin patch is a single surface treatment used to correct cracking and raveling on a small area of a wearing surface. It seals the defective area and reconditions the wearing surface. Sweep the damaged area, and apply a coat of asphalt cutback (usually RC-800) at a predetermined rate. Cover the bitumen with FA (1/4-inch stone or clean, coarse sand). Use 1 gallon of bitumen per 100 pounds of aggregate regardless of the aggregate size. Lightly roll or tamp the aggregate to seal it.

SEAL COAT

7-34. A seal coat is a single surface treatment used to seal large cracked or raveled areas. Basically, it is a sprayed application of bitumen that is covered with a thin layer of aggregate. Depending on the aggregate size, use about 1 gallon of bitumen per 100 pounds of aggregate. Use double surface treatments if necessary.

CRATERS

7-35. Bombs, shells, land mines, and cratering charges may produce extensive craters in roads and airfields. Surface damage presents no unusual repair problem, but an explosion may displace large areas of subgrade or cause instability. Drainage may be disrupted, allowing water to penetrate the broken surface, accumulate, and soften the subgrade. The subgrade's stability must be restored to support traffic and prevent undue settling of the surface. To repair a crater—

- Remove the damaged surfacing around the edges of the crater and the surfacing that is not firmly bonded to the base course.
- Trim the surface and the base course to a sound vertical edge.
- Remove water, mud, and debris from the crater and trim its sides.
- Fill the crater with successive 6- to 8-inch layers up to the original level of the subgrade. Thoroughly tamp and compact each layer with hand or pneumatic tamping tools.
- Pull or drive compaction equipment across the filled crater. A dozer can be used to compact granular materials, but it is not satisfactory for general compaction because of its low ground-bearing pressure (6 to 9 psi).
- Repair the base course and the surface.

7-36. Use gravel, rock, masonry, or other suitable debris (dry material no more than 12 inches in diameter) as backfill material. In an emergency, if sufficient backfill material is unavailable, take material from the shoulders or the edges of a repaired surface and replace the material later. Ensure that *borrowing* the material will not weaken the road structure.

7-37. A sand grid (cellular confinement system) can also be used to repair a crater (see *Figure 7-3*, page 7-12*)*. Installed in 8-inch layers, a sand grid provides excellent trafficability and stabilizes poorly graded or cohesionless soils. If the situation permits and an enemy attack is anticipated, prepare stockpiles or material borrow pits at convenient sites.

CAUTION
Do not use hot mix on sandbags.

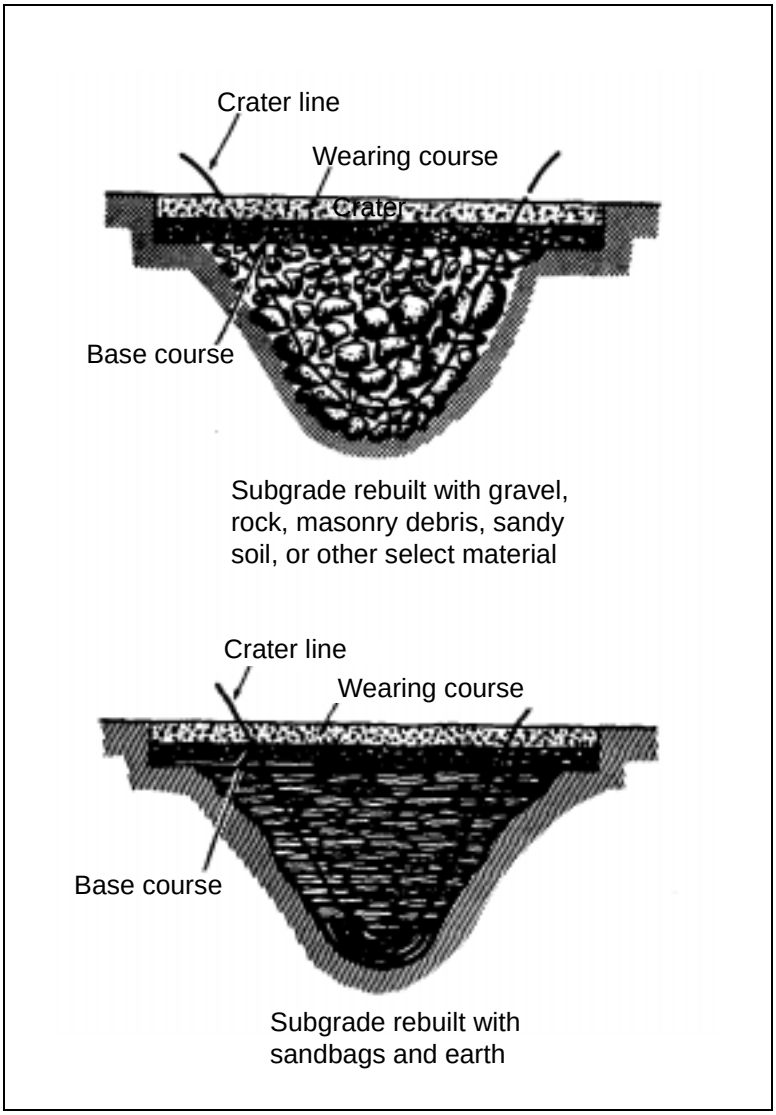

Figure 7-3. Expedient Crater Repair

PART TWO

Concrete Pavements

Portland cement (commonly referred to as concrete) is a hydraulic cement that is manufactured from carefully selected materials under closely controlled processes. Calcareous (limestone, marl) and argillaceous (shale, clay) materials are generally used in manufacturing portland cement. Blast-furnace slag is sometimes used to supply part of the ingredients. The raw materials are crushed and pulverized, mixed in proper proportions for the correct chemical composition, and fed into rotary kilns where they are calcined at a temperature of about 2,700°F to form a clinker. The clinker is cooled and then pulverized with a small amount of gypsum to regulate the setting time. The pulverized product is the finished portland cement. It is finely ground so that nearly all of it passes a sieve having 200 meshes per lineal inch or 40,000 openings per square inch. When portland cement is mixed with water, a paste is formed that sets, becomes firm, and then hardens for an indefinite period.

Wire mesh is sometimes used in concrete pavement to control cracks caused by shrinkage and changes in temperature. The load-bearing capacity of concrete pavement is distributed by beam action over a wide area. Concrete is essentially a mass of artificial conglomerate stones consisting of strong, inert materials in a granular or fragmental (aggregate) form. The materials are bound together by a hardened, water-cement paste. The quality of concrete depends on the proportion of water to cement, the manner in which the concrete is handled and placed after it is mixed, and the thoroughness of curing. For best results, carefully select materials and ensure that they are properly handled, stored, and measured.

Concrete is used to pave roads, runways, taxiways, and other surfaces that carry heavy wheel loads and heavy volumes of traffic. However, concrete pavement is not normally constructed in the TO because mixing, placing, and curing it usually requires more manpower and time than bituminous pavement. An adequate subgrade and base are as important for concrete pavement as they are for bituminous pavement. Even though concrete bridges weak spots in the subgrade, repeated loading leads to fatigue failure at weak spots.

Chapter 8

Components of Concrete

Concrete is a mixture of sand, gravel, crushed rock, and/or other aggregates that are held together by a hardened paste of cement and water. The properties of concrete vary depending on the ingredients used and their proportions in the mix. Generally, concrete mix consists of 25 to 40 percent cement paste, 25 to 40 percent aggregate, and 7 to 15 percent concrete. When cement and water are combined, hydration (liberation of heat) occurs. The strength of concrete begins with hydration and increases as long as hydration continues. After 28 days, the relative strength increase levels off.

TYPES OF PORTLAND CEMENT

8-1. Various types of portland cement have been standardized for different uses. The type of construction, the chemical composition of the soil, the economy, and the speed of construction determine the type of cement used. The five types of portland cement are described below. Types I, II, and III are the most widely used; Types IV and V are used for specific applications.

NOTE: *Chapter 9* addresses air-entrained cement, which is a special type of cement made with an air-entraining admixture.

- **Type I, normal portland cement.** Type I cement is used in general construction. It is used for pavement construction where concrete is not subject to sulfate hazards or where heat generated through hydration does not cause an objectionable rise in temperature.
- **Type II, modified portland cement.** Type II cement generates lower heat at a slower rate than Type I, and it has improved resistance to sulfate. It is used in hot weather when moderate heat generation tends to minimize the rise in temperature; Type I may be preferable in cold weather. Type II cement can be used as a precaution in areas where sulfate concentrations are higher than normal but are not severe.
- **Type III, high-early-strength portland cement.** Type III cement is used when high strengths are needed very early in an operation. Forms can be removed in a short time, and the concrete can be put into quick service. It is also used to reduce the amount of time uncured cement is exposed to low temperatures. Type III cement usually cures in two days at 70°F and three days at 50°F. High strength can be obtained at an early stage more satisfactorily and economically with Type III cement than with Type I.
- **Type IV, low-heat portland cement.** Type IV cement is used when the amount and rate of generated heat must be kept to a minimum. It develops strength at a slower rate than Type I. Type IV is normally used in large, mass projects, such as concrete dams, to combat the rise

in temperature where heat generated during hardening may be a critical factor. It is seldom used for road or airfield construction.

- **Type V, sulfate-resistant portland cement.** Type V cement is used in structures that are exposed to severe sulfate action, such as areas that have water with a high acid content. It gains strength at a slower rate than Type I.

WATER

8-2. Water is mixed with cement to form a paste and produce hydration. Foreign materials in the water that tend to retard or change the chemical reaction are detrimental to concrete. Organic material and oil may inhibit the bond between the hydrated cement and the aggregate by coating the aggregate and preventing the paste from adhering to the aggregate. Several alkalies and acids react chemically with cement and retard normal hydration, and organic material may have the same effect. The result is a weakened paste, and the contaminating substance will likely cause deterioration or structural failure of the finished concrete.

SEA WATER

8-3. Sea water and cement can be mixed with satisfactory results; however, concrete strength may be reduced by 10 to 20 percent. Salt water acts as an accelerant much the same as calcium chloride ($CaCl_2$). Avoid using sea water in reinforced concrete if possible; but as a field expedient, decrease the water-to-cement ratio to offset the strength loss. If the water-to-cement ratio cannot be changed, consider the following to offset strength reduction:

- If using ocean water with an average salt content, multiply the design thickness by 1.15 to obtain a thickness of equal strength.
- If using water from a landlocked sea, such as the Dead Sea, with an extremely high salt content, multiply the design thickness by 1.25 to obtain a thickness of equal strength.

WELL WATER (SULFUR)

8-4. Avoid using water with a high sulfur content (normally present in wells and streams near underground mines) in concrete. If it is the best type of water available, however, use sulfur-resistant cements. Sulfur water that is not unpleasant to drink produces excellent results with Type V cement, good results with Type II cement, and fair results with other types of cement. If the water contains enough sulfates to make it unpleasant to drink, it produces good results with Type V cement, fair results with Type II cement, and marginal or unsatisfactory results with other types of cement. Some sulfur water may also contain acids or alkalies, and adding an accelerator may offset the harmful effects of these contaminants.

AGGREGATE

8-5. Aggregates can be added to cement paste as a filler; however, they affect the proportions and the economy of a mix and the qualities of the finished

concrete. The most common fillers are crushed rock and natural deposits of sand and gravel. Artificial aggregates, such as blast-furnace slag or specially burned clay, can be used if natural aggregates are unavailable. A satisfactory, expedient aggregate can sometimes be produced by crushing the rubble from demolished structures.

TYPES

8-6. FA and CA can be used to produce concrete. Combining both types yields a well-graded mix that produces a strong, durable, almost voidless building stone. For portland-cement concrete, aggregate is considered fine when it passes a number 4 sieve and is retained on a number 200 sieve with 3 to 5 percent passing a number 100 sieve. Use FA to fill voids between CA particles and to reduce the amount of paste needed. Aggregate is considered coarse when it passes a 3-inch sieve and is retained on a number 4 sieve. CA is primarily used as a filler. For pavement, ensure that the maximum size CA does not exceed 2 inches or one-third the thickness of the slab. The larger the particle, the less paste is needed to coat the aggregate.

CHARACTERISTICS

8-7. To produce high-quality concrete, ensure that the aggregate is clean, hard, strong, durable, and round or cubical in shape. (See *FM 5-472* for information on testing bulk-specific gravity, absorption of aggregates, surface moisture of FA, and organic matter in sand.)

8-8. Organic matter, dirt, silt, clay, or chemicals may cause finished concrete to deteriorate by inhibiting the bond between the cement paste and the aggregate or by reacting with the constituents of the cement. Excessive fines may also inhibit bonding and produce a mix that is structurally weak and susceptible to breakdown by weathering. Wash the aggregate to remove harmful ingredients. To determine mix proportions, ensure that the aggregate is in a saturated, surface-dry condition or adjust the water-to-cement ratio to compensate for the amount of water contained in the aggregate.

8-9. Aggregate should be strong and resistant to abrasion from weathering and wear. Weak, friable, laminated, or very absorptive aggregate particles are likely to cause deterioration of the finished concrete. Inspect aggregate frequently to disclose weaknesses.

GRADATIONS

8-10. Aggregate gradation and size affect the relative proportions, workability, and economy of a mix and the watertightness and shrinkage of finished concrete. In general, aggregate used for concrete must be well-graded to produce a dense mass with minimum voids. Aggregate that is not well-graded may reduce the strength of finished concrete and increase the cost of the mix because of the additional paste required to fill voids. (See *FM 5-472* for a more detailed explanation of aggregate gradations.) *Table 8-1* lists the recommended limits for FA and CA.

Table 8-1. Recommended Aggregate Gradation Limits for Portland-Cement Concrete

Size Number	Nominal Size	Amounts Finer Than Laboratory Sieve (Square Openings), Percent by Weight								
		2 1/2 Inch	2 Inch	1 1/2 Inch	1 Inch	3/4 Inch	1/2 Inch	3/8 Inch	No. 4	No. 8
3, 5, 7	2 inch to No. 4	100	95-100	70-90	35-70	50-20	10-30	20-5	0-5	---
4, 6, 7	1 1/2 inch to No. 4	---	100	95-100	60-85	35-70	25-50	10-30	0-5	---
5, 7	1 inch to No. 4	---	---	100	95-100	60-80	25-60	15-45	0-10	0-5
6, 7	3/4 inch to No. 4	---	---	---	100	90-100	55-80	20-55	0-10	0-5
7	1/2 inch to No. 4	---	---	---	---	100	90-100	40-70	0-15	0-5
3	2 to 1 inch	100	90-100	35-70	0-15	0-15	0-15	---	---	---
4	1 1/2 to 3/4 inch	---	100	90-100	0-15	0-15	0-10	0-5	---	---

FINENESS MODULUS

8-11. The fineness modulus is an index of the relative fineness or coarseness of sand in a concrete mix. It is calculated by adding the cumulative percentages of an aggregate sample that is retained on each sieve of a specified series and dividing the result by 100. The sieves ordinarily used are numbers 3, 4, 8, 16, 50, and 100. Aggregate with a very low or high fineness modulus is not as satisfactory for concrete as aggregate with a medium fineness modulus.

BLENDING

8-12. If the aggregate gradation does not meet recommended limits due to the lack or abundance of certain particle sizes, blend the material to meet the requirements. Correct deficiencies by adding missing particles or screening out abundant particles.

ADMIXTURES

8-13. Admixtures used with portland cement are air-entraining agents, accelerators, retardants, plasticizers, cement-dispersing agents, concrete densifiers, and waterproofing agents. They are used to change the characteristics of a mix or a finished concrete. Do not use admixtures if the end result can be achieved more economically by altering mix proportions. This manual addresses admixtures used in concrete pavements; cement-dispersing agents, concrete densifiers, and waterproofing agents are only used for constructing structural members.

AIR-ENTRAINING AGENTS

8-14. Air-entraining agents increase the resistance to frost action and chemicals and improve the workability of a mix. These agents are liquids derived from wood resin, animal fats, vegetable oils, and other wetting agents (alkali salts, sulfonated organic compounds, various water-soluble soaps). Many different air-entraining agents can be used to produce air-entrained concrete.

ACCELERATORS

8-15. Accelerators are used in a concrete mix to hasten hydration, which increases generated heat and produces a high-early strength cement. $CaCl_2$ is the most widely used accelerator, and it can be used if it is economical and the increased hydration will not cause flash set or undue shrinkage. Use 1 to 2 percent $CaCl_2$ by weight of the cement. This amount increases the flexural strength by 40 to 90 percent on the first day and 5 to 35 percent by the third day when moist-cured at 70°F. Flexural strength increases are lower at 40°F, and acceleration is usually greatest during the first three days.

8-16. With the same water-to-cement ratio, the ultimate strength at one year is about the same or slightly higher for cement mixed with $CaCl_2$. Because $CaCl_2$ increases the workability of a mix, lower water-to-cement ratios can be used with subsequent increases in strength. Do not use $CaCl_2$ for curing, on the surface, or as an admixture. Sodium chloride (NaCl) can also be used to accelerate hydration, but it will reduce the strength of concrete.

RETARDANTS

8-17. Retardants are used when the rate of hydration must be slowed down to allow proper placement and consolidation of the concrete before it sets. They can also be used to increase the strength and durability of concrete when it is revibrated before it sets. Many commercial retardants are available; and they basically consist of fatty acids, sugars, and starches. Use retardants when the—

- Danger of flash set exists.
- Heat of hydration is expected to be excessively high.
- Cement comes in contact with high ground temperatures (as in grouting operations).
- Concrete is laid during hot weather.

PLASTICIZERS

8-18. Plasticizers are used to make the concrete more workable. Do not use them as substitutes for proper aggregate gradation. Some materials that can be used as plasticizers include—

- Admixtures, which increase the workability of a mix.
- Air-entraining agents.
- $CaCl_2$ and other pozzolans.
- Lime.

- Finely pulverized inert fillers, which increase the workability of a mix that is deficient in fines. They also increase the amount of mixing water required.

8-19. A pozzolan is a siliceous material that becomes cement-like when it is combined with lime. It is normally used as a cement replacement agent. Fly ash, volcanic ash, calcined diatomaceous earth, and calcined shale are examples of pozzolans.

8-20. Fly ash, the most widely used pozzolan, is a waste product from large, powdered-coal furnaces. Used as a cement replacement agent, fly ash can replace up to 50 percent of the cement by weight. Using fly ash changes nearly all the properties of concrete in its plastic and hardened states. In general, fly ash improves the workability of plastic concrete. If the same amount of aggregate is used in a mix, identical slumps are obtained with cement/fly-ash mixes and portland-cement mixes; however, cement/fly-ash mixes have a lower water-to-cement ratio. Fly ash acts as a plasticizer, improves the workability of a mix, and greatly reduces bleeding and segregation. When compared to modified portland cement, fly ash reduces the heat of hydration by 40 to 50 percent. Fly-ash concrete does not gain strength and durability as fast as portland-cement concrete during the first month of hydration. Although after the first year, the strength and durability of fly-ash concrete are equal to or greater than portland-cement concrete.

MATERIALS HANDLING AND STORAGE

AGGREGATE

8-21. Concrete quantities that justify batch plants also justify stockpiles of aggregates at batch, crushing, and screening plants. Stockpiling prevents shortages at the batch plant and the paver. Stockpile aggregates for concrete pavement using the procedures discussed in *Chapter 4* for bituminous pavements.

CEMENT

8-22. Sacked cement that will be stored for a long time should be in a warehouse or a shed that is as airtight as possible. Ensure that the floor of the shed is above ground, and close up all cracks in the walls. Store the sacks close together to reduce air circulation; however, do not stack them against a wall. Stack cement sacks on a raised, wooden platform and cover them with tarpaulins (*Figure 8-1*, page 8-8). Note that tarpaulins extend over the edge of the platform to prevent rain from collecting on the platform and reaching the bottom sacks. Use tarpaulins for protection against moisture even when storing a small amount of cement for a short time. Ensure that the concrete mixer is located near the storage shed.

8-23. Cement retains its quality indefinitely when it is kept dry. If it is packed tightly and stored for a long time, it may develop *warehouse pack*. To correct warehouse pack, roll the sacks on the floor. Cement must be free-flowing and free of lumps when it is used. If the lumps are hard to break up, test the cement for suitability (see *FM 5-472*).

Figure 8-1. Cement Stored Under Tarpaulins

8-24. Bulk portland cement is blown through ducts from railroad cars to cement bins and weighing hoppers. The hoppers stand alongside trucks, beyond the aggregate batcher, and dump the cement into each batch. Open cement sacks and dump them into each batch from a roadside platform. Stack the sacks on the platform or the dunnage and cover them with tarpaulins or roofing paper. When hauling cement, cover it on the truck beds with tightly fitted canvas to prevent loss from wind and avoid damage from light showers. Depending on the length of the haul and the weather conditions, unopened sacks of cement may have to be opened at the mixer and dumped into each batch.

8-25. Loading platforms may be located at any point along the route from the batching plant to the paver. Hand trucks and roller conveyors are useful at loading points. Two people can toss cement sacks using a lifting-and-swinging rhythm. Empty sacks by cutting the underside lengthwise with a sharp, curved linoleum knife and pulling the empty sack free. When handling cement, wear goggles, respirators, and gloves. Avoid skin irritation by precoating exposed skin surfaces with petroleum jelly or neat's-foot oil. Store water near the mixer or water trailers, and ensure that water containers are clean and rust-free.

Chapter 9

Characteristics of Concrete

Concrete is a stone-like material that forms when a carefully proportioned mixture of cement, FA, CA, and water harden into the specific shape or dimension of a structure. Most of the material in concrete is FA and CA, and cement and water interact to bind the aggregates into a solid mass. By adjusting the proportions of the different materials, a wide range of strength properties can be achieved.

PLASTIC CONCRETE

9-1. The quality of hardened concrete depends mainly on the quality of plastic concrete, but the curing process also helps attain the specified design criteria. Carefully follow the design criteria, because mix consistency may vary. When testing ingredients for suitability, the only variable factor in the plastic mix is the proportioning and it must be accurate. Ensure that the plastic concrete is workable, free from CA segregation, and uniform in quality.

9-2. Workability is the relative ease or difficulty of placing and consolidating plastic concrete in a form. Maintain the mixture's consistency, as necessary, to obtain the workability needed for the placement method and the specific conditions. Conduct a slump test to measure the consistency and workability of a mix. To perform a slump test, place mixed concrete in a standard cone, in three layers of equal volume, and rod each layer 25 times. Place, rod, and strike off the last layer. Lift the cone away from the concrete that has slumped (settled). Record how much concrete settles below the top of the cone as a measure of workability. The allowable slump is determined by the specifications for the job. If using constant quantities of materials, the slump should remain constant. Any marked variation in slump or consistency indicates a deviation from the mix design. Investigate the deviation immediately and determine the cause.

9-3. Handle and place plastic concrete so that it is completely homogeneous (CA is not segregated). To prevent segregation, do not drop plastic concrete or allow it to fall free for a distance greater than 3 to 5 feet. To obtain uniformity, ensure that each batch is accurately proportioned according to the design criteria. Uniformity increases the economy of the mix and improves the quality of hardened concrete.

HARDENED CONCRETE

9-4. Concrete pavement must have sufficient flexural strength to carry the required load. The water-to-cement ratio is the most important factor for attaining the desired strength. For each sack of cement, use 4 to 7 gallons of water. Although a high water-to-cement ratio increases the yield of each sack

of cement, a thin paste is inherently weak. The evaporation of excess water during the curing process leaves voids that reduce the strength of the hardened concrete. When the water-to-cement ratio is increased above the minimum 4 gallons per sack, the durability decreases respectively.

9-5. The durability of finished concrete is determined by its ability to resist the effects of weather such as wind, frost, snow, ice, salt, abrasion, wetting-drying and freezing-thawing cycles, and chemical reactions of the soil. The climate, the pavement thickness, and the amount of exposure to the elements also affect the durability of concrete.

AIR-ENTRAINED CONCRETE

9-6. Air-entrained concrete is more resistant to weathering than other types of concrete. It reduces scaling, is resistant to severe frost, and is impervious to the effects of chemicals used for melting snow and ice. Compared to normal portland-cement concrete, air-entrained concrete is more durable but has slightly less strength. Air-entrained mixes have increased workability and decreased segregation.

9-7. Like other types of concrete, air-entrained concrete consists of cement, sand, gravel, and water. Millions of tiny air bubbles, which range from a few microns to 75 microns in diameter, are entrained (diffused) into the cement paste. (Calculations have indicated that as many as 400 to 600 billion air bubbles can be entrained in a cubic yard of concrete.) The percent of entrained air in concrete by volume is usually 4 1/2, with an acceptable range of 3 to 7 percent. Portland-cement concrete is normally 1/2 to 1 1/2 percent air; however, the air is usually entrapped as voids and is not dispersed uniformly throughout the mix.

PRODUCTION

9-8. Air-entrained concrete can be produced by—

- Adding air-entraining agents at the site. Use a commercially prepared agent in the quantities specified by the manufacturer. Do not dilute the agent with water unless specified. Types I, II, and III portland cement are commonly used for air-entrained concrete. Rigidly control the air content of the mix to obtain the desired uniformity. This is the preferred method for producing air-entrained concrete.
- Adding air-entraining agents during the cement manufacturing process. This method is less desirable because the air content cannot be changed at the work site, and the agents may lose their effectiveness after long storage. Sacks of air-entrained cement have an "A" suffix in their type designation, such as Type I-A.

9-9. The amount of air-entraining agents required to produce a given air content increases when the concrete's temperature increases. Therefore, test the air content frequently, especially when the concrete's temperature changes. During the production process, mix concrete for 1 to 2 minutes to ensure proper air content. Remember that air content—

- Increases about 1 percent when the mixing time is 1 to 5 minutes or more than 60 minutes.

- Remains unchanged when the mixing time is 5 to 10 minutes.
- Decreases gradually when the mixing time is more than 10 minutes.

9-10. Vibrating air-entrained concrete for 1 minute or more reduces the air content 15 to 20 percent. Internal vibration reduces the air content more than external vibration. (See *Chapter 13* for more information on concrete vibration.)

MEASUREMENT OF AIR CONTENT

9-11. The air content of freshly mixed concrete can be measured by pressure, gravimetric, and volumetric methods. In the pressure method, which is the most widely used, the volume of gas at a given temperature is inversely proportional to the subjected pressure. To obtain the desired percentage of entrained air in a concrete mix, use a calibrated air meter to measure a known volume of concrete that is subjected to a known pressure (see *FM 5-472* for more information).

SLUMP

9-12. Adding entrained air to a mix decreases the slump. A 3-inch slump is necessary to provide good workability to non-air-entrained pavement mixes. The same workability is present in an air-entrained mix that has a 1- to 2-inch slump because of the fatty character. The *whipped-cream* effect of air-entrained concrete allows slump reduction that maintains the original degree of workability. Slump reduction allows a decrease in the water-to-cement ratio, thus increasing the concrete's strength.

STRENGTH

9-13. The strength of air-entrained concrete is inversely proportional to the percent of entrained air. With all other factors constant, strength is reduced about 5 percent for each 1 percent of entrained air. Decreasing the sand and the water in a mix increases the concrete's strength and allows design specifications to be met without making major changes for air-entrainment. (*Chapter 10* addresses the proper method of adjusting the mix for entrained air.)

9-14. Entrained air causes voids in concrete, thus reducing its strength. On the other hand, the changes in workability and slump allow a water-to-cement ratio reduction, thus increasing the concrete's strength. Air-entrained concrete, which has the slump decreased and the strength properly adjusted, yields a mix that is almost equal in strength to the original non-air-entrained mix. The capillary air voids caused by the extra water is replaced by minute, evenly distributed air voids of entrained air that provide greater uniformity.

Chapter 10

Mix Design

The purpose of a mix design is to group the aggregates in different proportions to achieve the desired strength. The components of a mix are proportioned so that the resulting concrete has adequate strength, proper workability for placing, and low cost. Low cost is achieved by using the minimum amount of cement required to obtain adequate properties. Admixtures are often used for special purposes. **NOTE: This manual addresses mix designs for concrete paving mixes. See *FM 5-428* for information on mix designs for structural concrete.**

CRITERIA

10-1. The flexural (beam) and compressive strengths of a hardened mix are used for the concrete's design criteria. Flexural strength measures the bridging capacity and is used to design nonreinforced concrete pavement. Compressive strength measures the resistance to a direct load. Strength tests are usually made after 28 days for road pavement and after 90 days for airfield pavement.

WATER-TO-CEMENT RATIO

10-2. Select the proper water-to-cement ratio to ensure that a mix meets the requirements for flexural strength and durability. A durable mix has a long life, requires low upkeep, and is highly resistant to exposure and freezing. *Figure 10-1*, page 10-2, shows the relationship between age and flexural strength for Types I and III portland cement. *Table 10-1*, page 10-3, lists the recommended water-to-cement ratios for durability in various exposures. Select the lowest water-to-cement ratio that satisfies the requirements for flexural strength and durability.

10-3. Use the water-to-cement ratio shown in *Figure 10-1* for flexural strength and adjust the ratio for durability. For example, to find the water-to-cement ratio for Type I portland cement with a flexural strength of 600 psi at 28 days, read from the bottom of the curve. The amount is 5 1/4 gallons of water per sack of cement. *Table 10-1* shows that the durability requirement is 5 1/2 gallons of water per sack of concrete. Therefore, using 5 1/4 gallons as the lowest ratio will satisfy the requirements for flexural strength and durability. Once the water-to-cement ratio has been selected, do not change it except for air-entrainment adjustments.

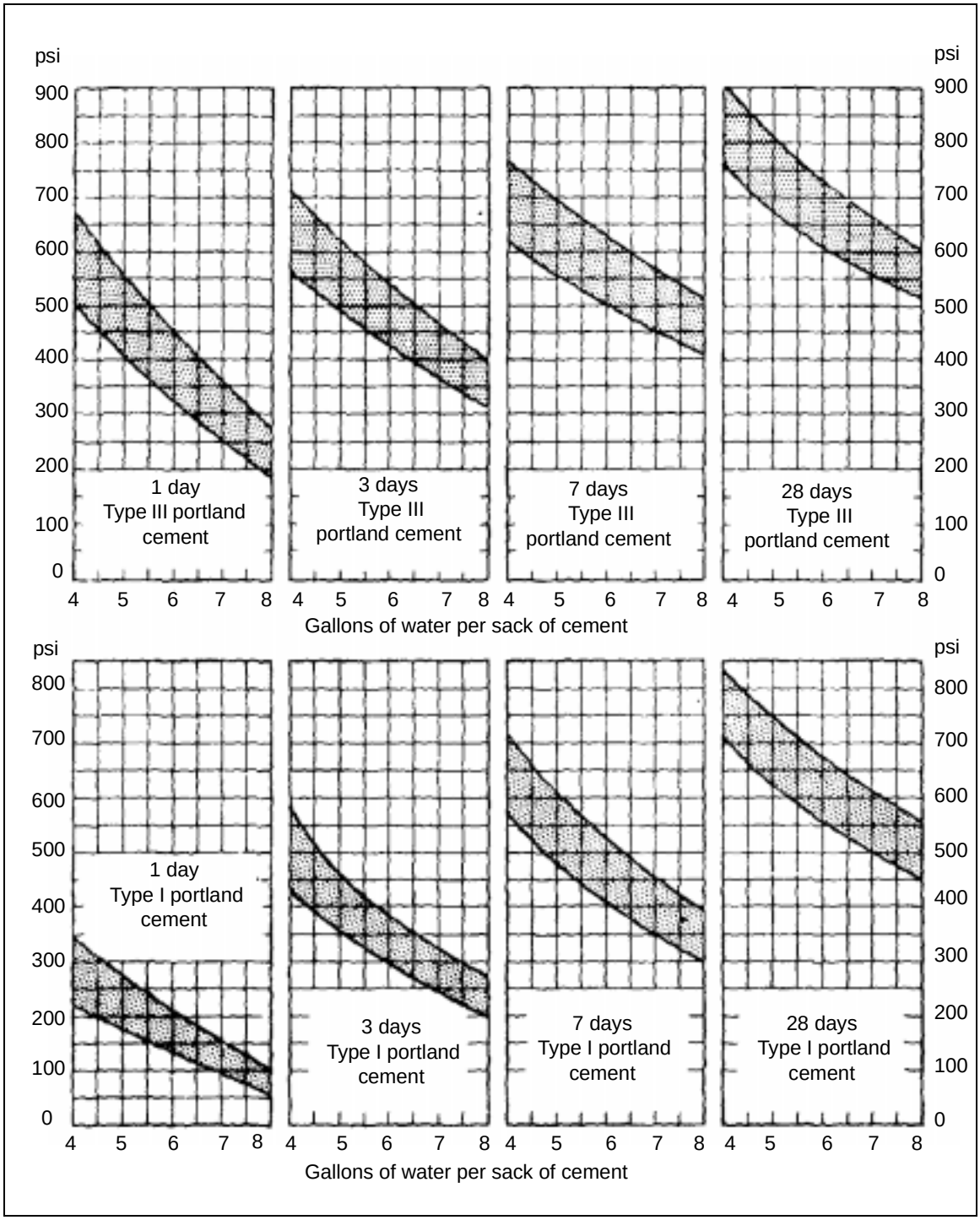

Figure 10-1. Relationship Between Age and Flexural Strength for Types I and III Portland Cement

Table 10-1. Water-to-Cement Ratios for Durability

Pavement Slabs Directly on the Ground	Severe or Moderate Climate, Wide Range of Temperature, Rain and Long Freezing Spells, Frequent Freezing and Thawing (Gallons of Water per Sack)			Mild Climate, Rain, or Semiarid; Rarely Snow or Frost; No Hard Freezing (Gallons of Water per Sack)		
	Thin Sections (0-8 In)	Moderate Sections (8-24 In)	Mass Sections (>24 In)	Thin Sections (0-8 In)	Moderate Sections (8-24 In)	Mass Sections (>24 In)
Wearing slab*	5 1/2	5 1/2	5 1/2	6	6	6
Base slab	6 1/2	6 1/2	6 1/2	7	7	7
*New construction of roads and airfields will usually fall under the criteria for a wearing slab.						

AGGREGATE

10-4. FA is used to increase workability and to fill the spaces remaining in the CA. Very fine sand is uneconomical because it requires more cement paste, and very coarse sand produces unworkable mixes. In general, FA that has a smooth gradation curve produces the most satisfactory results. For economy, 10 percent or less of FA should pass a number 100 sieve; however, 3 to 4 percent passing a number 100 sieve provides optimum workability.

10-5. CA should be graded to the maximum size, which should not exceed one-third of the slab's thickness. Assuming FA and CA have smooth gradation, the larger the CA, the less paste is needed to produce satisfactory concrete. For most paving operations in a TO, the CA size is ≤2 inches.

WORKABILITY

10-6. The workability of a mix is largely governed by the amount of aggregate added to the mix. The sand's gradation and the relative percentage of sand to gravel also affect workability. Because more aggregate is required than cement, a stiff mix is more economical than a fluid one. If too much aggregate is used, the mix may contain voids and be dry, crumbly, and difficult to place in forms. Mechanical vibration can increase the workability of a stiff mix. If a mix is too fluid and contains insufficient aggregate, heavy aggregate particles settle to the bottom and fines rise to the top.

10-7. Conduct a slump test to measure the workability of a mix as described in *FM 5-472*. However, remember that a slump test of air-entrained concrete will not yield a reliable measurement. A 1- to 2-inch slump for air-entrained concrete indicates about the same degree of workability as a 3-inch slump for non-air-entrained concrete.

METHODS

10-8. There are two methods of mix design—book and trial batch. They are used to proportion the quantities of cement, water, and aggregates used in the concrete.

BOOK METHOD

10-9. The book method is a theoretical method of design that uses laboratory data. Because of the variation in materials, the book method is used as a design basis and adjustments are made in the field using the trial-batch method.

Selecting Mix Proportions

10-10. Use *Table 10-2* to determine the quantities of ingredients needed for a trial mix of medium consistency and to compute the cubic-foot yield per sack of cement. The information in this table is based on a 3-inch slump with aggregate in a saturated, surface-dry condition.

Table 10-2. Trial Mixes for Portland-Cement Concrete

Maximum Size of Aggregate, In	Water, Gal per Sack of Cement	Water, Gal per CY of Concrete	Cement, Sacks per CY of Concrete	Fine Sand, Fineness Modulus 2.2-2.6						Medium Sand, Fineness Modulus 2.6-2.9						Coarse Sand, Fineness Modulus 2.9-3.2					
				FA Per Coat of Total Aggregate	FA, Lb per Sack of Cement	CA, Lb per Sack of Cement	FA, Lb per CY of Concrete	CA, Lb per CY of Concrete	Yield, CF of Concrete per Sack of Cement	FA Per Coat of Total Aggregate	FA, Lb per Sack of Cement	CA, Lb per Sack of Cement	FA, Lb per CY of Concrete	CA, Lb per CY of Concrete	Yield, CF of Concrete per Sack of Cement	FA Per Coat of Total Aggregate	FA, Lb per Sack of Cement	CA, Lb per Sack of Cement	FA, Lb per CY of Concrete	CA, Lb per CY of Concrete	Yield, CF of Concrete per Sack of Cement
¾	5	38	7.6	43	170	230	1290	1750	3.56	45	180	220	1370	1670	3.56	47	185	210	1370	1595	3.56
1	5	37	7.4	38	160	255	1185	1890	3.65	40	165	250	1220	1850	3.65	42	175	240	1295	1775	3.65
1½	5	35	7.0	34	150	300	1050	2100	3.86	36	160	290	1120	2030	3.86	38	170	280	1190	1960	3.86
2	5	33	6.6	31	150	335	990	2210	4.09	33	160	325	1055	2140	4.09	35	170	315	1120	2080	4.09
¾	5½	38	6.9	44	195	250	1345	1725	3.91	46	205	240	1415	1655	3.91	48	215	230	1480	1585	3.91
1	5½	37	6.7	39	180	285	1205	1910	4.03	41	190	275	1270	1840	4.03	43	200	265	1340	1775	4.03
1½	5½	35	6.4	35	175	320	1120	2050	4.22	37	185	315	1185	2015	4.22	39	195	305	1250	1950	4.22
2	5½	33	6.0	32	175	370	1050	2220	4.50	34	185	360	1110	2160	4.50	36	195	350	1170	2100	4.50
¾	6	38	6.3	45	225	275	1420	1730	4.29	47	235	265	1480	1670	4.29	49	245	255	1540	1610	4.29
1	6	37	6.2	40	205	305	1270	1890	4.36	42	215	295	1335	1830	4.36	44	225	285	1395	1770	4.36
1½	6	35	5.8	36	200	355	1160	2060	4.66	38	210	345	1220	2000	4.66	40	225	335	1305	1945	4.66
2	6	33	5.5	33	200	400	1100	2200	4.91	35	210	390	1155	2145	4.91	37	220	380	1210	2090	4.91
¾	6½	38	5.9	46	245	288	1445	1700	4.58	48	255	280	1505	1650	4.58	40	265	265	1560	1560	4.58
1	6½	37	5.7	41	230	330	1310	1880	4.74	43	240	320	1370	1825	4.74	45	250	310	1425	1765	4.74
1½	6½	35	5.4	37	225	380	1215	2050	5.00	39	235	370	1270	2000	5.00	41	250	355	1350	1920	5.00
2	6½	33	5.1	34	225	430	1150	2195	5.30	36	235	415	1200	2120	5.30	38	250	405	1275	2065	5.30
¾	7	38	5.4	47	280	315	1510	1700	5.00	49	290	305	1565	1650	5.00	51	300	290	1620	1565	5.00
1	7	37	5.3	42	255	355	1350	1880	5.10	44	270	340	1430	1800	5.10	46	280	330	1485	1750	5.10
1½	7	35	5.0	38	250	410	1250	2050	5.40	40	265	395	1325	1975	5.40	42	270	385	1350	1925	5.40
2	7	33	4.7	35	250	465	1175	2185	5.75	37	265	450	1245	2120	5.75	39	280	435	1315	2045	5.75
¾	7½	38	5.1	48	300	330	1530	1680	5.30	50	315	315	1605	1605	5.30	52	330	300	1685	1530	5.30
1	7½	37	4.9	43	285	380	1400	1860	5.51	45	300	365	1470	1790	5.51	47	310	355	1520	1740	5.51
1½	7½	35	4.7	39	275	430	1290	2020	5.75	41	290	415	1365	1950	5.75	43	305	400	1435	1880	5.75
2	7½	33	4.4	36	275	495	1210	2180	6.14	38	290	480	1275	2110	6.14	40	305	465	1340	2045	6.14
¾	8	38	4.8	49	330	354	1585	1655	5.63	51	345	330	1660	1585	5.63	53	360	315	1730	1510	5.63
1	8	37	4.6	44	315	400	1450	1840	5.87	46	330	385	1520	1770	5.87	48	345	370	1590	1700	5.87
1½	8	35	4.4	40	305	455	1340	2000	6.14	42	320	440	1410	1935	6.14	44	335	425	1475	1870	6.14
2	8	33	4.1	37	310	525	1270	2150	6.59	39	325	510	1330	2090	6.59	41	340	490	1395	2010	6.59

Example: Based on the following specifications and using *Table 10-2*, determine the quantities of each ingredient required per sack of concrete, the yield (cubic feet) per a one-sack batch, and the total materials required for a cubic yard of concrete:

fineness modulus of sand = 2.3
slump = 3 inches
water-to-cement ratio = 6 gallons per sack
maximum size of CA = 2 inches

Solution:

cement = 1 sack (94 pounds)
FA = 200 pounds
CA = 400 pounds
water = 6 gallons
yield per one-sack batch = 4.91 cubic feet

cement = 5.5 sacks
FA = 1,100 pounds
CA = 2,200 pounds
water = 33 gallons
yield = 1 cubic yard

Adjusting for Slump Variation

10-11. Pavement mixes often require a slump other than 3 inches, so adjust the figures accordingly. For every 1-inch decrease in slump, decrease the sand by 3 percent and the water by 1 gallon per cubic yard of concrete. In the above example (paragraph 10-10), the mix adjustments for a 2-inch slump are:

cement = 5.5 sacks (no change)
FA = 1,067 pounds (1,100 x 0.03)
CA = 2,200 pounds (no change)
water = 32 gallons (33 - 1)

Adjusting for Moisture

10-12. In the field, aggregates usually contain moisture in excess of the saturated, surface-dry condition. Excess moisture added to the mix will alter the water-to-cement ratio and reduce flexural strength and durability by increasing the capillary voids in the finished concrete. Normal surface moisture content is 2 to 6 percent for FA and 2 percent for CA. Excess moisture in FA or CA can change the water-to-cement ratio from 6 gallons to 8 1/2 gallons per sack of cement unless the problem is corrected. This increase in water would reduce the 28-day flexural strength of concrete by about 20 percent. Surface moisture content, however, is based on a saturated, surface-dry weight instead of a dry weight as in soils. Use the following formulas to determine the amount of moisture present in the aggregates:

$$M = \frac{SMC}{100}(Assd)$$

$$A_w = Assd + M$$

$$W_a = W_d - 0.12$$

where—
M = *excess surface moisture, in pounds*
SMC = *surface moisture content, in percent*
$Assd$ = *weight of saturated, surface-dry aggregate (design weight), in pounds*
A_w = *weight of required wet aggregate, in pounds*
W_a = *adjusted volume of water, in gallons*
W_d = *design volume of water, in gallons*

Example: The surface moisture content is 4 percent for FA and 1 percent for CA. Using the above formulas and *Table 10-2*, page 10-4, determine the material requirements and calculate the yield, in cubic feet, per sack of cement.

Solution:

Calculate the quantity of FA.

$$M = \frac{4}{100}(1,100) = 44 \text{ pounds of water}$$

$$A_w = 1,100 + 44 = 1,144 \text{ pounds of FA}$$

Calculate the quantity of CA.

$$M = \frac{1}{100}(2,200) = 22 \text{ pounds of water}$$

$$A_w = 2,200 + 22 = 2,222 \text{ pounds of CA}$$

Calculate the quantity of water.

$$W_a = 33 - 0.12(44 + 22) = 33 - 0.12(66) = 33 - 8 = 25 \text{ gallons of water}$$

After adjustments for moisture, the mix ingredients for 1 cubic yard of concrete are:

cement = 5.5 sacks (no change)
sand = 1,144 pounds
gravel = 2,222 pounds
water = 25 gallons

Adjusting for Entrained Air

10-13. One way to adjust for air entrainment is by strength correction. This method results in a slump reduction that maintains a constant workability. For each percent of air, decrease the water by 3 gallons and the sand by 10 pounds per sack of cement. The sand is decreased because the air bubbles cause oversanding.

Example: Using the mix specifications in paragraph 10-10, adjust the ingredients for an air content of 4 percent.

Solution: After adjustments for entrained air, the mix ingredients for 1 cubic yard of concrete are:

cement = 5.5 sacks (no change)
sand = 1,100 - (5.5 x 10 x 4) = 880 pounds
gravel = 2,200 pounds (no change)
water = 33 - (5.5 x 0.25 x 4) = 27.5 gallons

The yield of the mix is changed by the entrained air. To determine the adjusted yield, divide the design yield by 100, minus the percent of entrained air, as follows:

Adjusted entrained-air yield = design yield ÷ (100 - percent air)

Example: Determine the yield of the mix design in paragraph 10-10 if the entrained air is 4 percent.

Solution: *1 ÷ (100 - 4) = 1.04 cubic yards*

TRIAL-BATCH METHOD

10-14. The trial-batch design method is a simple field method that is based on experience. It is more reliable than the book method because the mix can be adjusted until it is satisfactory. Record data as described in *FM 5-472* for the final mix design, and calculate yield from the absolute volume of materials.

Mixing a Trial Batch

10-15. Select the water-to-cement ratio based on experience or by using *Table 10-1*, page 10-2. Select the workability based on the guidance in paragraphs 10-6 and 10-7. If the slump criteria is not established, make the mix as stiff as possible while maintaining a homogenous, voidless mass.

10-16. Trial batches can be as large as the mixer allows, but small quantities are more convenient. Use about one-tenth of the sack batch. For example, if the water-to-cement ratio is 5 gallons per sack, then use 0.5 gallon of water and one-tenth sack of cement (9.4 pounds). Mix the cement and the water to form a paste. Then mix the sand and the gravel with the paste until the desired consistency is obtained. Ensure that the FA and the CA are in a saturated, surface-dry condition.

10-17. Obtain the weights of the sand and the gravel by weighing each container filled with aggregate before running the trial batch and by weighing the container with the remainder of the aggregate after the run. The difference is the weight of the aggregate used in the trial batch. Test the consistency of the trial batch using the slump test (see *FM 5-472*). After determining the required amounts of sand, gravel, and water needed for one-tenth sack of cement, multiply the weight of each ingredient by 10 to obtain the amount needed for a one-sack batch of concrete.

Calculating the Yield

10-18. Convert the weights of the ingredients to absolute volumes. To calculate the absolute volumes of the ingredients in a mix, determine the specific gravity of the materials. Portland cement normally has a specific gravity of 3.15. See *FM 5-472* for the standard tests used to determine the

specific gravities of sand and gravel. The sum of the absolute volumes is the concrete yield from a one-sack batch of concrete.

Establishing the Cement Factor

10-19. Establish the cement factor to determine the quantity of each ingredient necessary to batch a mixer or to estimate the total amount of each ingredient required. To do this, divide the volumetric capacity of the mixer or the job by the yield and multiply the quantities for a one-sack batch by the cement factor.

Example: Determine the amount of each ingredient required to batch a 16S mixer, which has a capacity of 16 cubic feet with no overload. The assumed yield is 4 cubic feet.

Solution: Use the following formula to determine the amount of ingredients needed:

$$\textit{cement factor} = \frac{\textit{volume (mixer capacity)}}{\textit{yield}} = \frac{16}{4} = 4 \textit{ cubic feet}$$

Applying the Trial-Batch Method

10-20. The following example illustrates the trial-batch method of mix design and yield calculation. Use the Chapman flask test to determine the specific gravity of sand, the pycnometer test to determine the specific gravity of gravel, and the suspension method to determine the specific gravity of CA (see *FM 5-472*).

Example: Using Type I cement, design a concrete mix for a 10-inch concrete pavement with a flexural strength of 550 psi at 28 days. The specific gravities are assumed to be 3.15 for cement, 2.65 for sand, and 2.66 for gravel. The pavement will be located in an area that has a severe climate.

Solution: For Type I portland cement and a specified flexural strength of 550 psi, use 6 1/4 gallons of water per sack (see *Figure 10-1*, page 10-2). For a 10-inch pavement slab placed in a severe climate (durability factor), use 5 1/2 gallons of water per sack (see *Table 10-1*, page 10-3). The lowest acceptable ratio that will satisfy the requirements for flexural strength and durability is 5 1/2 gallons of water per sack.

The required slump is 1 1/2 to 2 inches. Mix the cement and the water together. Add the sand and the gravel to the paste until a well-proportioned plastic mix is obtained. For the initial trial batch, use one part sand and two parts gravel. More than one trial batch may be necessary to get the required slump. A slight variation in the slump is not detrimental as long as the mix is plastic enough to be finished without excess mortar. To correct excess slump, add more aggregate.

Compute a one-sack batch of mix by multiplying trial-mix calculations by 10 as follows:

cement = 94 pounds (9.4 x10)
water = 5.5 gallons (0.55 x10)
sand = 183 pounds (18.3 x 10)
gravel = 362 pounds (36.2 x 10)

Determine the yield by computing the absolute volume of each component using the following formulas:

$$absolute\ value = \frac{saturated,\ surface\text{-}dry\ weight\ of\ material}{specific\ gravity \times unit\ weight\ of\ water}$$

$$cement = \frac{94\ pounds}{3.15 \times 62.4} = 0.478\ cubic\ foot$$

$$water = \frac{5.5\ gallons}{7.5\ gallons\ per\ cubic\ foot} = 0.733\ cubic\ foot$$

$$sand = \frac{183\ pounds}{2.65 \times 62.4} = 1.107\ cubic\ feet$$

$$gravel = \frac{362\ pounds}{2.66 \times 62.4} = 2.181\ cubic\ feet$$

$$yield = 4.5\ cubic\ feet$$

Chapter 11

Concrete Equipment

Military engineers should be familiar with the different types of concrete equipment, their capabilities, and their employment procedures. Operators and maintenance crews must enforce the basic principles that apply to each piece of equipment.

CONCRETE MIXER

11-1. The 16S concrete mixer is a self-contained unit that produces a 16-cubic-foot batch of concrete, plus a 10 percent overload. The hourly production rate varies between 10 and 15 cubic yards depending on personnel efficiency. The mixer consists of a frame, wheels, a towing tongue, an engine, a power-loader skip, a mixing drum, a water tank, and an auxiliary water pump. A concrete mixer can also be used as a central mixing plant. Aggregate that is larger than 3 inches will damage the mixer. The 16SM concrete mixer can also mix mortar.

PNEUMATIC CONCRETE VIBRATOR

11-2. The pneumatic concrete vibrator, which is available in two sizes, is a table of organization and equipment (TOE) item and a Class IV item in some units. The small vibrator has a 17 3/4-inch tube that is 2 1/2 inches in diameter, and the large vibrator has a 21 5/8-inch tube that is 3 inches in diameter. The power for both units is supplied by a five-lane, rotary air motor. A flexible, bonded, rubber coupling between the air motor and the unbalanced rotor eliminates the transmission of shock loads between rotating parts.

11-3. Radial ball bearings at each end of the unbalanced rotor carry the rotating load and facilitate proper assembly of the vibrator. A specially carbonized, hardened, steel-casing tube resists the outside wear. The tip is covered with a long-wearing, satellite material. The vibrator operates at 80 psi and produces 8,500 to 9,000 vibrations per minute. The small unit is used on concrete with a slump over 3 inches, and the large unit is used on concrete with a slump under 3 inches.

11-4. The vibrator on the spreader is effective to a depth of 12 inches, and internal vibrators consolidate an area that is about 36 inches in diameter. Only one type of vibrator can be used at a time. Be careful when vibrating an air-entrained mix; some vibration is necessary, but overvibration can cause a loss of entrained air.

CONCRETE SAW

11-5. A concrete saw is used to cut longitudinal and transverse joints in finished concrete pavements. Several types of blades are available, and the most common ones have diamond or carbide cutting surfaces. A diamond blade is used for hard cutting, and a carbide blade is used for cuts after the aggregate has been displaced by vibration. A concrete saw is small and can be operated by one man. Once the cut has been started, the machine provides its own tractive power. A water spray flushes the saw cuttings from the area and cools the cutting blade.

PIN PULLER

11-6. Several types of pin pullers are available. One type consists of a lever and a fulcrum. One end of the lever clamps onto the head of a pin. Pressure is applied to the other end of the lever, and the action over the fulcrum exerts sufficient force to remove the pin. Another type of pin puller has a peavey handle with a clamp connected to it.

WATER HEATER

11-7. A water heater is available as Class IV equipment. It consists of a vaporizing burner with kerosene and water tanks. The heater can raise the temperature of water by 100°F at a rate of 800 gallons per hour. It is used to heat water for concrete operations during cold weather. *Chapter 13* contains additional information on using a water heater.

WARNING
Never allow the water to exceed 175°F because a flash set may occur when the water is added to the concrete mix.

CONCRETE BUCKET

11-8. Concrete buckets are available in sizes from 2 to 34 cubic yards as standard TOE and Class IV supplies. They are normally used to place structural concrete. Most of the buckets are cylindrical with a clamshell door at the bottom that can be hand-operated. Buckets are normally used with a crane.

11-9. Buckets can be easily constructed in the field. Well-designed expedient buckets work better than standard buckets when transferring mix from a 5-ton dump truck to pavement forms. A scoop loader (front-end loader) with a 4-in-1 bucket works very well as an expedient concrete bucket if it can maneuver alongside the forms and the slab is not too wide.

SUPPORTING EQUIPMENT

11-10. Cranes, finishing tools, water pumps, and shovels are necessary in concrete construction. Each job is unique and should be treated as such when planning for equipment use. Before starting an operation, analyze the job and

its equipment requirements, including supporting equipment. Although expedients may be substituted for most pieces of supporting equipment, having the correct tool for the job greatly improves the efficiency of the project.

CENTRAL MIX PLANT

11-11. A central mix plant has facilities to handle, store, batch, and mix concrete materials. The batcher discharges directly into the mixer, and the mixer discharges the concrete into the hauling unit, which transports the concrete to the construction site. A central mix plant rigidly and accurately controls the water-to-cement ratio, the aggregates' moisture content, and the concrete's consistency. It also provides centralization of responsibility. There are no central mix plants in the Army's system, but two 34E pavers can be used as a central mix plant.

11-12. A central mix plant should be located so that the mix can be placed within 30 minutes. The site should be level and have good drainage. A sidehill location is usable if there is an adequate working area around the mixers. However, a retaining wall must be constructed to support the wall of the truck-loading well, and a sump must be located against the retaining wall to drain the well. The working and storage areas should be paved if the plant will be used over an extended period of time.

11-13. Water is a critical item for a central mix plant, and locating a water source is a primary factor in site selection. If water is not available at the site, it can be brought in by a truck or a pipeline (a pipeline is the best solution). The water point should be located so that truckbeds can be thoroughly cleaned before they are filled with concrete. A good road network is also a primary factor in site selection. In most cases, fair-weather roads are acceptable. Concrete paving operations are usually suspended before bad weather makes unimproved roads impassable.

M919 CONCRETE MOBILE

11-14. This is a mobile concrete plant that is mounted on an M919 truck chassis. The mixer carries enough material to produce up to 8 cubic yards of concrete. The unit can be used on an intermittent or a continuous basis; however, a continuous operation depends on the availability of materials at the site. Control settings for mix operation of the M919 vary from truck to truck and from site to site.

Chapter 12

Forms and Joints

The riding quality of concrete pavement depends largely on the quality of support that the forms give to the form-riding equipment. Good form alignment alone does not ensure a good surface because bent or inadequately supported forms will contribute to surface irregularities. Steel paving forms contain concrete in a specific area and provide a track for the form-riding equipment. Joints are constructed in concrete pavements to—

- Allow concrete to contract and expand without breaking.
- Relieve warping and curling stresses.
- Separate sections of pavement that are placed at different times.

SECTION I - FORMS

12-1. Steel forms are made in 10-foot lengths and held in position by three wedged pins and end locks. Their weight varies from 204 pounds for 8-inch forms to 292 pounds for 12-inch forms. *Figure 12-1* shows a standard steel form.

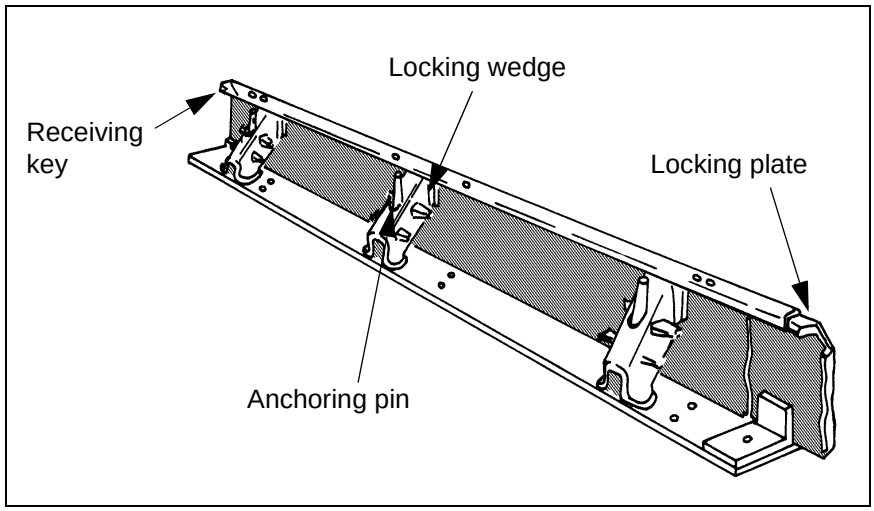

Figure 12-1. Steel Concrete Form

PROCEDURES

12-2. To hold the forms in position, insert pins in each hole and drive them into the subgrade. The pin length depends on the height of the form and the type of subbase or subgrade. The pins should be at least 18 inches long for 8- or 9-inch forms and 30 inches long for 12-inch forms. The pins should be longer for a very plastic, low-density subgrade but can be shorter for a well-compacted, high-density subbase because it provides good lateral support to the portion of the pin below the form.

12-3. Forms have sliding lock plates at one end to fit under the flanges of adjacent forms and to ensure positive alignment at joints. The plates slide easily into the locking position; this prevents them from being battered out of shape when installed and removed. Failure to lock a joint may cause the form-riding equipment to stop and the surface to align irregularly.

CONSTRUCTION

12-4. Standard forms are designed so that they can be used on curves with a radius as short as 150 feet. Shorter radii require some type of flexible form, such as sheet metal or 1-inch wood. Heavy construction of standard forms is not required because form-riding equipment cannot turn on sharp curves that have a radius of less than 150 feet (hand-finishing methods are normally used under these condition). Secure flexible metal or wooden forms into position by driving stakes at frequent intervals to hold them in alignment.

12-5. Form height should be equal to the specified thickness of the concrete, and the base should be at least 80 percent the thickness of the height. When necessary, increase the height of the forms by placing them on wooden risers. Ensure that the thickness of the wooden base does not exceed 25 percent of the original form height and that it brings the forms to the required height.

12-6. Ensure that the surface of the subgrade or subbase is the same height or slightly higher than the elevation of the form base so that the form rests on compacted material. Trim the form base to the proper elevation before placing the form in position.

PLACEMENT AND ALIGNMENT

12-7. After trimming the form base, place the form, set a pin in each hole, and align the form with the string line. Set the string line at the proper height for grading the form base. If grading by hand, set the stakes so that the string is on line with the form face and is at the elevation of the form top. The string serves as a guide for setting forms. If grading by machine, set the string line twice—first on an offset and at a height to meet the requirements of the grader, and second, as for hand grading. Set the stakes at 25- to 50-foot intervals on vertical and horizontal curves. Drive the form pins with a sledgehammer or a mechanical pin driver (compressed air).

12-8. A pin driver (*Figure 12-2*) consists of a clay spade (digger or 35-pound pavement breaker) with a modified moil-point tool. The sharp end is removed from the moil point, and a collar is welded on so that it rests over the head of the pin. When air is supplied, the clay spade exerts enough force to drive the

pin down. The collar prevents the tool from vibrating off the head of the pin. The pneumatic pin-driver method saves man-hours and decreases the mushrooming effect on the pinhead. When the forms are at the proper elevation, drive wedges and end plates to hold them firmly in position.

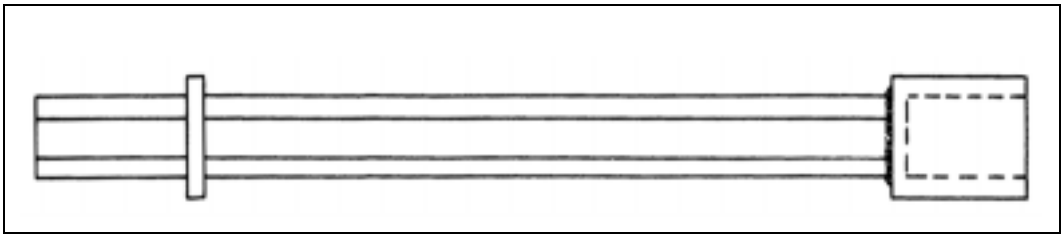

Figure 12-2. Pin Driver

12-9. Ensure that the forms are rigid and the support is firm. The forms should not deflect more than 1/4 inch when tested as a simple beam carrying a load that is equal to the heaviest equipment being used. The forms should rest on a firm base, not on pillars or columns of material. To ensure this, pack the material under the forms by rolling it with a form tamper or tamping bars.

12-10. Minor variations in elevation may exist, and they can be recognized by sighting along the top of the forms. To correct a low spot, raise the form by loosening the locking wedges and end plates, place a bar under the base, and tamp additional material beneath the form. Correct high spots by removing the form and trimming off excess material.

HANDLING

12-11. Spray or brush forms with form oil immediately before each use. This prevents concrete from sticking to the forms and facilitates removal, cleanup, and reuse. Oil also prevents concrete damage when keyways are removed.

12-12. Remove forms as soon as the concrete slab has hardened sufficiently. To avoid chipping the new concrete when removing the forms, use pin pullers with adequate bearing on the forms. To prevent bending the forms when lifting them, loosen them thoroughly from any spilled concrete, soil, or other material. Do not use a form if the top is out of line by more than 1/8 inch in 10 feet. With proper handling, forms retain the straightness that is essential to an even surface finish.

12-13. Clean forms before reusing or storing them. When storing forms, stack them about five high for easier handling.

12-14. Unless a special bridge truck with a 22-foot extendible boom is available, use a 25-ton, low-bed trailer to transport forms from one area to another. When dropping forms off a low-bed trailer, ensure that they do not hit one another and that the ground is not rocky enough to damage them. If the area is level, use a forklift or a small crane to move the forms short distances.

.

SECTION II - JOINTS

TYPES OF JOINTS

12-15. Construction, expansion, and contraction joints are used in concrete pavements. Joints that are parallel to the centerline of the pavement are longitudinal, and joints that are at right angles to the centerline are transverse.

CONSTRUCTION

12-16. Install construction joints as follows:

- Place longitudinal construction joints along the interior edges of each paving lane according to the design criteria. Joints can be doweled or keyed.
- Place transverse construction joints at the end of a day's placement or at other points on a paving lane where placement has stopped long enough for the concrete to start setting. When practical, these joints take the place of a planned transverse or expansion joint. When impractical, install a transverse construction joint not less than 10 feet from the closest, regularly spaced transverse joint. Use dowels on transverse construction joints that are at a planned joint location, and use tie bars when transverse construction joints are along the center of a slab.

EXPANSION

12-17. Expansion joints allow the concrete to move without disturbing the adjacent structure or intersecting pavement. They also decrease compressive stress, which may cause sections of the concrete pavement to blow up.

12-18. Use expansion joints (*Figure 12-3*) in pavement that is <10 inches thick, at pavement intersections, and around structures that are in contact with the pavement. If placing concrete when temperatures exceed 95°F, omit expansion joints in slabs that are <10 inches thick. If the concrete contains aggregate with a high coefficient of thermal expansion, also use expansion joints in pavement that is >10 inches.

12-19. The expansion-joint filler may be a wooden board or a preformed bituminous-treated fiber that conforms to specification requirements and dimensions. Use dowels for all transverse expansion joints to maintain alignment of the adjoining slabs and to provide load transfer between the slabs. Thick edge slabs should be free, undoweled, longitudinal expansion joints. These free joints are usually installed in large paved areas and at ridge lines where a change of grade is required.

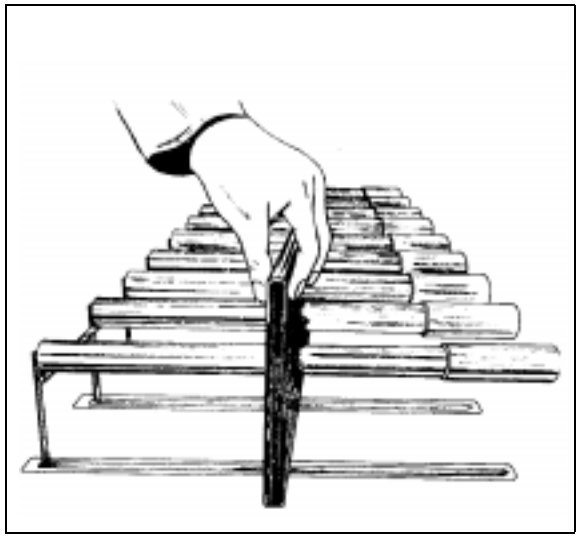

Figure 12-3. Expansion Joint

CONTRACTION

12-20. Contraction joints are installed to—

- Control pavement cracking when the concrete contracts.
- Limit curling or warping stresses created by differences of temperature and moisture between the top and bottom of the slab.

12-21. Longitudinal and transverse contraction joints are weakened-plane joints that are formed by cutting grooves in the top portion of the pavement to ensure contraction cracking at the joint. Form contraction joints in plastic concrete during pavement construction, or saw them in the pavement after it has hardened.

12-22. Construct the weakened-plane joints (dummy joints) according to the design criteria. For pavement ≥10 inches, the spacing of the transverse contraction joints should be equal to the width of the paving lanes, usually 20 to 25 feet. However, concrete made with certain types of aggregate, such as slag, may shrink more and require closer joint spacing. The depth of contraction joints is usually equal to one-fourth of the pavement thickness.

12-23. The cost of sawing joints is directly related to the depth of the cut, and the least depth possible should be determined by a trial in the field. If a concrete saw is unavailable, construct contraction or dummy joints using a steel form that is 1/4 by 4 by 19 3/4 inches. Weld hooks to the top edge of the form (the hooks will be used to pull the form out after the concrete has set). Coat the form with heavy grease and apply bond paper. Use a hammer or a vibrator to insert the steel form in the concrete. Pull out the form after the concrete sets to leave a clean vertical joint.

DOWELS

12-24. Dowels are mechanical load-transfer devices built as an integral part of certain transverse joints. Install dowels across a joint so that the joint can

open and close and the slab ends on each side of the joint will be held at the same elevation. The deflection of one slab under load is resisted (through the dowel) by the other slab, which is deflected and carries a portion of the load imposed on the first slab.

12-25. Use dowels for transverse expansion joints and transverse construction joints installed at planned joints. Also use dowels in longitudinal construction joints, at intersections, at frequent stopping places, and at outside lanes or slabs of the pavement. The diameter, length, and spacing of dowels vary with the pavement's thickness. All dowels should be straight, smooth, and free from burrs at the ends. Paint and grease half the length of the dowel so that it will bond with the concrete.

12-26. Cap the ends of dowels used in expansion joints; do not cap the ends of dowels used in construction joints. Ensure that the dowels in construction joints or other locations where a filler is not installed are the same size, type, and spacing as transverse expansion joints. *Table 12-1* lists approved sizes of dowels.

Table 12-1. Sizes and Uses of Dowels

Pavement Thickness, Inches	Minimum Dowel Length, Inches	Maximum Dowel Spacing, Inches	Dowel Diameter, Inches	Dowel Type*
<8	16	12	0.75	Steel bar
8-11	16	12	1	Steel bar
12-15	20	15	1.25	Steel bar or extra-strength pipe
16-20	20	18	1.5	Steel bar or extra-strength pipe
21-25	24	18	2	Steel bar or extra-strength pipe
>25	20	18	3	Steel bar or extra-strength pipe

*When extra-strength pipe is used, fill it with a stiff mixture of sand-asphalt or cement mortar or plug the ends of the pipe. If the ends of the pipe are plugged, the plug must fit inside the pipe and be cut off flush with the end of the pipe so that there will be no protruding material to bond with the concrete and prevent free movement of the dowel.

INSTALLATION OF JOINTS

12-27. Joints are necessary in concrete pavement. However, even the best joints are weak under load stresses and deteriorate because of the weather. Most concrete pavement failures start at the joints. Inspect the area before, during, and after placing the concrete to ensure good joints. Construct all joints perpendicular to the finished grade of the pavement. Place transverse joints at right angles to the centerline of the pavement, and ensure that joints continue along a straight line through all lanes.

12-28. Place longitudinal joints parallel to the centerline of the pavement at the required spacing. Install all expansion and construction joints before placing the concrete. Inspect tie bars and dowels in contraction joints early in

the placing process. Do not extend steel, reinforcement, or unrequired dowels or tie bars through any joint.

LONGITUDINAL CONSTRUCTION JOINTS

12-29. Longitudinal construction joints are defined by the direction of the forms. Ensure that dowels are the required size and are accurately installed in the forms at the proper location and required spacing. The dowels should be held securely and accurately in position so that they will not be displaced when the concrete is placed. Forms usually have an outside channel or other holding device for keeping the dowels in position. Check the embedment depth while placing the concrete, and embed the fixed portion of the dowel during the first placing operation. Paint and grease the exposed portions of the dowels before placing the adjoining lane.

12-30. When using key longitudinal joints, key forms should be made of steel. If steel forms are unavailable, use wood forms. Fasten key longitudinal joints securely to pavement forms at required locations.

TRANSVERSE CONSTRUCTION JOINTS

12-31. Install transverse construction joints after the paving operation is complete. Transverse construction joints are generally formed by installing a temporary bulkhead between the forms or at the end of them. Ensure that the bulkhead is securely fastened in place. Install dowels when the transverse construction joint is located at a scheduled joint. When concrete placement stops at the interior of a slab, place tie bars in the joint to form a continuous slab unit when additional concrete is placed. Construct the next regular joint in a planned location.

EXPANSION JOINTS

12-32. Expansion joints are the most difficult to set and maintain in the correct position. Check them carefully throughout the paving operation. Ensure that the joint filler and dowels or other load-transfer devices are held securely in place with available devices, such as wires, stakes, or chains. Ensure that the joint filler is in a vertical position and supported so that it will not be disturbed or damaged during concrete operations. Carefully prepare the subgrade and accurately cut the joint material so that it will extend continuously from the required position at the top of the slab and from edge to edge on the pavement.

CONCRETE PLACEMENT

12-33. While placing concrete, protect the top edge of the filler with a metal channel cap that forms a space for the poured sealer when the cap is removed. Hold the dowel bars in place, with metal baskets or other installing devices, parallel to the surface and the inside line of the form on the slab. Check the bars with a template, coat the free end of the dowel with heavy oil or grease, and place a close-fitting expansion cap on the dowel. Immediately correct dowel displacement that is in excess of the allowable tolerance.

FINAL POSITIONS

12-34. Check the horizontal position of the dowels with a steel tape that has the dowel-bar spacings marked, and then check the vertical position with a dowel-bar checker. The checker is basically a rectangular U-frame with two legs about 10 inches long and an adjustable level, which is mounted on the crossbar. When checking 16-inch dowels, the legs should be spaced 12 inches apart; when checking 20-inch dowels, the legs should be spaced 16 inches apart.

12-35. Adjust the level to compensate for the grade of the pavement by placing the checker on top of the forms at each expansion joint and centering the bubble. Set the legs of the checker on the dowel bar, straddling the joint an equidistant between the legs. The position of the level's bubble should be within the limits for the specified tolerance. If a dowel-bar checker is unavailable, allow for the grade of the pavement and use a level and a rod to check the vertical position of the dowels.

JOINT SURFACES

12-36. Carefully finish the surface of the concrete at the joint, and check it with a straightedge to ensure that it provides a smooth riding surface. Use an edging tool to round the top edges of the joint. Remove concrete that has entered the space above the joint filler during the finishing process. When removing the side forms, remove wedges of concrete that are across the ends of the joints. Concrete left spanning the joint prevents free expansion and causes spalling.

CONTRACTION JOINTS

12-37. Form weakened-plane (dummy) contraction joints by grooving the top portion of the freshly placed concrete with a suitable tool or by sawing the grooves in the pavement after the concrete has hardened. In general, weakened-plane joints are constructed without any steel. The load transfer depends on the interlock of aggregate and mortar in the fractured plane below the joint opening. Install dowels or tie bars, when required, in contraction joints before placing the concrete. Use baskets or other suitable supports to accurately hold the steel in place during paving operations. Check dowel alignment.

HAND-FORMED JOINTS

12-38. Form weakened-plane joints in plastic concrete using a metal bar or another tool that produces a groove of the required dimensions in the top of the slab. Form the joints when the concrete has properly hardened. If the joints are formed too soon, the concrete will sag under the pressure of the forming tool and leave a depressed area in the region of the joint. Also, the concrete will flow together when the bar is removed. If the concrete is too hard, the forming tool will disturb the concrete when it is inserted or removed. Forming a joint too late produces a high joint, and even slight irregularities in the joint area produce a rough riding surface. Carefully inspect joint forming to avoid faulty joints.

SAWED JOINTS

12-39. The following are advantages of sawed joints:

- The number of required finishes is reduced because hand finishing is unnecessary at the joints.
- A smoother, better riding surface is provided by machine finishing.
- The deterioration at joints is reduced because the concrete is not manipulated after it is placed and partially set.
- The curing compound can be applied earlier because the joints are sawed afterward. The compound is not removed before the joint is sealed.

12-40. Saw joints before cracking occurs and after the concrete has hardened so that it will not be torn or disturbed. Various factors (concrete consistency, air temperature, humidity, wind) influence how long it takes concrete to harden, which determines when sawing can be started. For example, during hot, dry weather, sawing can probably be started after 6 hours; in cold weather, it may be delayed 24 hours. In the field, examine the concrete or make a trial cut to determine when sawing can be started.

12-41. Saw or hand-form control joints in the concrete at intervals of 80 to 100 feet (intermediate joints are sawed later). With this method, cracking between the joints can occur because of the delay in sawing intermediate joints.

12-42. Use a guide to saw the joint in a straight line. Using a mechanical guide can delay the sawing operation because it takes time to install the guide and move it between joints. Saw carefully if using a chalk line marked on the pavement as a guide. Thoroughly flush the groove with water when finished sawing. Saw the joint to about 1/8 inch in width, and enlarge the top to a width of 3/8 to 5/8 inch. The depth should be 5/8 to 7/8 inch to provide suitable space for sealing the joint.

SEALING JOINTS

12-43. Seal joint openings with a poured joint sealer to prevent moisture movement between the pavement surface and the subgrade. The sealer also prevents solid material from entering and spalling concrete joints under heavy traffic. Seal joints as soon as possible after the curing period, but do not seal them when the air temperature is below 50°F or during wet weather. Before sealing joints, thoroughly clean them with a power-driven saw blade, a sand blaster, compressed air, or a suitable joint-cleaning machine. Sawed joints usually retain some cuttings from sawing; therefore, clean them carefully. Loosen the material in the sawed joints by running a worn-out saw blade in the joint.

12-44. Use hot-poured or cold-applied sealers for airfield pavements. Heat the material in containers that will maintain a constant temperature by keeping the material thoroughly agitated. Control the material's temperature according to the manufacturer's recommended temperature range. Do not overheat the sealer because it could affect its quality. Do not reheat sealers or any material that is left in the heating pot after a scaling operation; this material is considered waste. Do not hold sealing material at the pouring

temperature for a long period because it may affect its quality; melt the sealer and use it as required. Fill the joints flush with the pavement surface, and remove excess material that spills over the pavement. Use equipment for installing cold-applied sealers according to the manufacturer's recommendations. Use a jet-fuel-resistant material on airfields that handle jet aircraft.

Chapter 13

Concrete Paving

Concrete paving is a broad subject that involves quality control (materials, concrete mix, finished slab); subbase preparation; form setting; materials; material handling; and concrete production, placing, and finishing. Much thought and planning go into setting up an efficient concrete-paving operation. The military engineer at the job site directs day-to-day operations; therefore, he must understand and be familiar with concrete theories and equipment.

SECTION I - MATERIAL MEASUREMENTS AND TRUCK REQUIREMENTS

CEMENT

13-1. Each sack of cement weighs 94 pounds. It is unnecessary to weigh sacked cement.

13-2. Bulk cement must be weighed for each batch. This is usually done at a bulk-cement plant, where the cement is stored in a bin that is equipped with a weighing hopper. If a central mix plant is used, the weighing hopper discharges through a canvas tremie directly into the charging hopper on the mixer. If a central mix plant is not used, the cement is dropped into batch trucks via a flexible hose that is attached to the batcher.

WATER

13-3. Water must be accurately measured for each batch of concrete. Water tanks on machine mixers are equipped with measuring devices, and the amount of water going to the mixer is controlled by a predetermined setting. Continual maintenance and periodic checks assure proper operation of the measuring device.

13-4. If the automatic measuring device is not functioning correctly, use a galvanized pail to measure the water. Paint 1/4-, 1/2-, and 1-gallon marks on the inside of the pail. Keep the pail near the mixer, and use it only for measuring water.

NOTE: Never add unmeasured water to concrete. The amount of water required for mixing includes the surface water (see *FM 5-428*).

AGGREGATE

13-5. Aggregate must be accurately measured for each batch of concrete. Measure aggregate by weight, if possible, and by volume if scales are unavailable. The accuracy of volume measurement depends on estimating the amount of hulling present in the aggregate, and the amount of hulling varies depending on the sand's moisture content.

WEIGHT MEASUREMENT

13-6. Measuring aggregate by weight is the most accurate and efficient method. An aggregate batching plant should be used if possible, but truck scales can be used as an expedient measuring device. The weight will be accurate to within 20 pounds if the scales are in good condition. The following example shows the procedures for measuring materials with truck scales:

Step 1. Total weight of truck = 20,810 pounds

Step 2. Desired weight of gravel = 3,000 pounds

Step 3. Gross weight of truck and gravel (Step 1 + Step 2) = 23,810 pounds

Step 4. Desired weight of cement (for example, 7.5 sacks x 94 pounds/bag) = 705 pounds

Step 5. Gross weight of truck, gravel, and cement (Step 3 + Step 4) = 24,515 pounds

Step 6. Desired weight of sand = 1,500 pounds

Step 7. Gross weight of truck and all materials (Step 5 + Step 6) = 26,015 pounds

13-7. In this example, place gravel in the truck until the scales indicate a gross weight of 23,810 pounds, add cement until the weight reaches 24,515 pounds, and add sand until the total is 26,015 pounds.

13-8. Weigh each truck before each load. The greatest source of error in this method is weight changes caused by men getting on and off the scales during weighing. One man stepping on the scales during the addition of cement can cause a shortage of about two bags of cement in the batch.

VOLUME MEASUREMENT

13-9. Measuring aggregate by volume is usually an expedient method because of its low efficiency and accuracy. To weigh aggregate by volume, place known weights of materials in a wheelbarrow, a bucket, or a box. Level the surface and mark the weight on the inside of the container. Repeat until all desired weights are marked. The major error in this method is caused by the differences in the amount of voids in each batch. The weight of each mix component is different, so separate measuring containers are required.

TRUCK REQUIREMENTS

13-10. The haul road's condition and the truck's capacity affect the number of batches that can be hauled per truck. For round trips of 4 to 10 miles on roads in fair condition, trucks can average 10 mph (including loading and dumping)

if sacked cement is used and 12 mph if bulk cement is used. Use the following formula to determine truck requirements for round-trip distances of >4 miles:

$$N = \frac{BD}{bs}$$

where—

N = *number of batch trucks required*
B = *number of batches mixed per hour*
D = *round-trip distance, in miles, from batch plant to paver (4 miles minimum)*
b = *number of batches per truck*
s = *speed, in mph (10 for sacked cement, 12 for bulk cement [increase if D is more than 10 miles])*

SECTION II - PROCEDURES

SEQUENCE OF OPERATIONS

13-11. The recommended sequence for concrete paving is as follows:

- Prepare the subgrade.
- Mix the concrete.
- Transport the concrete.
- Prepare expansion joints.
- Place the concrete.
- Vibrate the concrete.
- Finish the surface.
- Prepare contraction joints.
- Finish the edges.
- Cure the concrete.
- Seal joints and cracks.
- Remove forms.
- Test the surface.
- Test the strength.

NOTE: Appendix B contains an inspection checklist that can be used as a guide, and *Section III* of this chapter discusses specific procedures for paving during hot and cold weather.

PREPARE THE SUBGRADE

13-12. Compact the subgrade and bring it 3 to 4 inches above grade. Use a motor grader to shape and cut the surface 2 inches above grade. Set the forms to line and grade (see *Chapter 10*). Check the forms and then conduct the final grading with a form-riding subgrader. Carefully set the cutting blades so that they will cut to the correct depth (within 1/4 to 1 inch above the finished grade). Use the subgrade planer to cut the subgrade to the required section

and elevation. Ensure that the subgrade conforms to the required section within specified tolerances (usually 1/8 inch).

13-13. Check the contour of the finished subgrade with a scratch template. Operate the template on the side forms, with the adjustable steel rods projecting downward to the subgrade at not less than 1-foot intervals. Adjust the rods to the required contour of the subgrade. Add or remove material to bring all portions of the subgrade to the correct elevation. Thoroughly recompact the subgrade and retest it with the template. The equipment should be strong and rigid so that it will not show a deflection of more than 1/8 inch at the center. If a template is unavailable, check the subgrade with piano wire or another strong line to mark the grade. Hold the wire taut at the top of the form that has been set to grade, and measure from the wire to the subgrade at 1-foot intervals.

13-14. To minimize the subgrade's absorption of moisture from the concrete, thoroughly wet the subgrade before placing the concrete. Ensure that the subgrade is damp but not muddy. In dry, hot weather, sprinkle the subgrade with water immediately before placing and spreading the concrete. The required degree of saturation depends on the character of the material in the subgrade. Correct soft or spongy places in the subgrade by removing poor material, replacing it with good material, and recompacting the subgrade.

13-15. Compact the subgrade based on its abrasiveness. Some types of soil, such as loess, absorb water like a sponge. Loess is soft when it is wet; but when it is dry, it causes plastic shrinkage due to water loss from the concrete. To circumvent this problem, place a layer of tar paper on the subgrade. If a bituminous treatment is used, check the water loss in a test section.

MIX THE CONCRETE

13-16. Mixing is one of the most important steps in producing high-quality concrete that meets design specifications. For efficient production of concrete, use the correct type of mixer, locate the mixer and ingredients near the paving operation, and properly operate the mixer. Mixing can be done in stationary mixers in a central plant, which combines the batching and mixing operations, or it can be done in pavers at the work site. Regardless of the type of mixer used, blend the materials into a uniform mix throughout the batch. Ensure that all aggregate particles are coated with the paste and that the mixed concrete discharges without segregation or loss.

13-17. Ensure that all concrete mixing units are clean and in good operating condition. Replace mixing blades that are worn down ≥3/4 inch. It is especially important that the water-batching mechanism not leak when the valve is closed. Check all control devices for proper operation. If applicable, ensure proper operation of automatic equipment for batching and dispensing admixtures.

13-18. Pavers are normally used for large-scale paving operations. Aggregate and bulk cement are weighed at the batching plant and hauled to the paver in batch trucks. The situation determines where and when sacked cement is added, but it is normally added just before the concrete is mixed. Sacked cement can be added to aggregate in the trucks after they arrive on the job or

after the aggregate is unloaded into the mixer's skip pan. Add water to the batch during charging of the aggregate and cement into the mixer.

13-19. Pavers are equipped with a boom and a bottom dump bucket to distribute the mixed concrete between the forms. Ensure that this equipment is in good operating condition. The discharge gate on the bucket should close tightly so that there is no leakage of mortar or concrete. When using dual-drum pavers, concrete is partially mixed in the first drum where the materials are charged. Mixing is completed in the second drum where the partially mixed concrete is transferred during the operating cycle.

13-20. Central-plant mixing allows closer coordination of batching and mixing operations, and it provides the best conditions for inspection and control of the mix. This method is less flexible than using pavers, and it requires additional equipment and labor for transporting and distributing the concrete in the forms. When a central plant is used, all materials are batched by weight.

TRANSPORT THE CONCRETE

13-21. After concrete leaves the mixer, it must be handled and transported so that segregation does not occur. Improper handling and transporting can spoil the most carefully designed and properly mixed concrete. Segregation occurs because concrete is composed of materials that have different particle sizes and specific gravities. Honeycomb concrete (rock pockets) is caused by CA particles settling to the bottom and liquids rising to the top.

13-22. Dump trucks (central mix plants) are commonly used to transport plastic concrete for large projects in TOs. Keep hauling distances as short as possible because segregation occurs rapidly enroute. Minimize segregation by preparing the mix as stiff as possible and adding an air-entraining agent to the mix.

13-23. A 34E paver can transport concrete from the mixer drum to the grade where it is being distributed. This is accomplished by a bucket that is suspended from the boom on four rollers and pulled back and forth on the boom with two ropes. The bucket doors are opened by a lever movement from the operator's platform, and they close automatically when the bucket returns to its position under the discharge trough. The bucket has a spreading radius of 32 feet 6 inches.

13-24. A belt conveyor can be used to transport concrete short distances. It can also transport concrete up slopes that do not incline >1/2 inch per foot and down slopes that do not incline >1 inch per foot. Ensure that the man-hours required to set up a belt conveyor is justified by the volume of concrete to be moved. A belt conveyor is frequently used to move aggregate or cement (sacked or bulk). The belt can be 12 to 60 inches wide and several hundred feet long. It is supported at 4- to 5-feet intervals by V-type idler pulleys and operates at speeds up to 400 linear feet per minute. The belt can handle a continuous flow of concrete (hopper) or intermittent output (batch mixer). Clean or wet the belt during its return trip to avoid an accumulation of dried mortar.

NOTE: Transit mixers and agitator trucks are also designed to transport concrete, but they are not standard Army equipment.

PREPARE EXPANSION JOINTS

13-25. Before the mix is placed, construct expansion joints on the finished subgrade. These procedures are discussed in *Chapter 12*.

PLACE THE CONCRETE

13-26. Deposit the concrete as close to the placement site as possible so that it will require minimum rehandling in the forms. To avoid segregation, ensure that concrete does not free fall more than 5 feet. Bottom dump buckets are the most satisfactory means of handling concrete in the forms. The buckets should be large enough to handle the complete batch of concrete from the mixer. Spread the concrete and strike it off slightly above the finished grade so that when the slap is consolidated and finished, it will be at the proper grade and have the required thickness. Concrete can be spread by concrete spreaders or by hand as follows:

- Use concrete spreaders on large jobs because they are very efficient and save labor. Set the spreader so that it strikes off the concrete to the desired elevation for placing welded wire fabric or finishing the surface.
- Spread concrete by hand with a square-edge shovel. Do not use rakes (they will cause the mix to segregate), dig into the subgrade, or walk on the concrete with mud or dirt on your feet. Strike off the concrete at the proper elevation.

13-27. Do not dump concrete directly on or against B-joints. Hand emplace it to avoid displacing the joint filler or load-transfer assembly. Deposit concrete near the joint, and then shovel it against both sides simultaneously to maintain equal pressure on both sides. Continuously check for displacement of the joint and dowels.

13-28. Spread concrete in even layers from 6 to 24 inches deep, depending on the type of construction. When placing concrete in two or more layers, avoid exposing any layer for more than 30 minutes because it may cause a plane of weakness between layers. If the placing operation consists of two layers, place welded-wire fabric between them. To prevent honeycombing or voids, vibrate the concrete after placement as described below in paragraphs 13-29 to 13-31. Do not overvibrate the concrete because it can cause void segregation and a weak surface.

VIBRATE THE CONCRETE

13-29. Vibrate the concrete adjacent to all forms and joints regardless of the slab's thickness. Apply vibration only long enough to consolidate the concrete; avoid excessive vibration. Withdraw vibrators from the concrete during movement between points of vibration; do not drag them over the concrete. Vibrate concrete adjacent to joints very carefully, and do not allow the vibrator to come in contact with the joint or load-transfer material. Operate vibrators only when necessary for consolidation of concrete; do not operate them during slack periods. Ensure that additional vibrators, motors, and repair parts for vibratory equipment are available on the job at all times to avoid a delay or shutdown of the paving operation due to equipment failure.

13-30. If pavement is <12 inches thick, internal vibration is normally not necessary. Consolidation and compaction depend on the action of finishing operations, and surface vibration may be required. The finishing machine is equipped with a vibrator to apply high-frequency vibration to the surface of the concrete. The vibrator is mounted between the two screeds on the finisher, but it will not normally be used if the vibrator on the concrete spreader is being used. Use surface vibration for very dry mixes only and check it carefully. Vibration of more-plastic mixes and overfinishing cause accumulation of an excessive layer of mortar with high water content at the surface and reduces the quality of the concrete. Excessive scaling and deterioration of pavement are caused by overmanipulation of the surface.

13-31. If slabs are ≥12 inches thick, vibrate them with internal vibrators. However, internal vibrators tend to produce some concrete segregation in the area of operation. Avoid overvibration, and do not operate a vibrator in one location >20 seconds. The following types of vibrating machines are used for internal vibration:

- **Multiple-unit vibrator.** A multiple-unit vibrator consists of a group of internal vibrating units that are mounted in a single line on a frame. Each unit is capable of perpendicular and radial movement. Vibrating units should be mounted ≤30 inches apart. A multiple-unit vibrator is normally attached to the rear of a concrete spreader, and the concrete is vibrated immediately after spreading. The vibrators are inserted into the concrete to within 2 inches of the subgrade and dragged through the concrete as the spreading machine advances. However, the preferred method is to mount the vibrating machine on a separate carriage and withdraw the vibrating units from the concrete while advancing the machine in 2-foot increments.
- **Tube vibrator.** A tube vibrator has vibrating elements embodying two closely spaced parallel tubes. A submersible vibratory motor and the tube assemblies are mounted on each element. The vibrating elements are mounted on a frame that can be attached to a spreader or a finishing machine. The tubes should be readily adjustable to operate at any desired depth within the concrete, but they are normally operated at the midpoint of the slab's thickness.

FINISH THE SURFACE

13-32. Begin finishing operations immediately after placing the concrete. Use machines to finish concrete, if possible; finish concrete by hand only if it is inaccessible to machine finishers. Ensure that finishing equipment and tools are clean and free of hardened concrete or grout. Strike off concrete as soon as it is placed, and screed it to the crown. Cross-section the concrete to the proper elevation so that when the surface of the pavement is properly consolidated and finished, it is at the correct grade and free of porous places.

SPREADING

13-33. A concrete spreader follows immediately behind the paver and works intermittent batches of concrete into a continuous, uniform slab of concrete between the forms. The trolley blade, which is the first part of the spreader to

come in contact with the wet concrete, moves transversely between the forms while the spreader advances forward on the forms. The trolley blade can be set at, below, or above the elevation of the top of the forms to facilitate the laying of two lifts of concrete for reinforcing material. The strike-off plate strikes off the concrete at the desired elevation at, below, or above the forms' elevation. The strike-off plate can be set to give the pavement a crown, a warp, or a straight cross section. The spreader works just ahead of the finishing machine.

13-34. The spreader operator, aside from the purely mechanical handling of the machine, must carefully watch the operation of the paver. Through experience, he learns the best way for the paver operator to deposit successive batches of concrete in front of the spreader.

13-35. The spreader operator must carefully watch the action of the concrete in front of the screed to ensure that excessive concrete is not going through the finishing machine. He must not strike off the concrete so low that the finishing machine screeds are starved.

HAND FINISHING AND FLOATING

13-36. Areas that are inaccessible to the finishing machine are floated by hand with wooden hand floats or trowels. Floating by hand is accomplished from bridges that rest on the side forms and span the concrete.

STRAIGHTEDGE FINISHING

13-37. While the concrete is plastic, eliminate minor irregularities and score marks in the pavement with long-handled wooden floats and straightedges. Use a long-handled float to smooth and fill in open-textured areas in the pavement's surface; use a straightedge to do the final finishing. A 12-foot straightedge can be operated from a bridge or from the side of the pavement. A straightedge operated from the side of the pavement should be equipped with a handle that is 3 feet longer than one-half the width of the pavement. Test the surface for trueness with a 12-foot straightedge held in successive positions parallel with and at right angles to the centerline of the pavement. Check the entire surface to detect any variations from the desired cross section. Immediately fill depressions with freshly mixed concrete that is struck off, consolidated, and refinished.

BURLAP DRAG FINISHING

13-38. Drag the surface of the pavement with burlap after most of the water glaze or sheen has disappeared and before the concrete becomes nonplastic. Drag longitudinally in the direction of placement with multiple burlap drags at least 3 feet wide and equal in length to the width of the slab. Securely fasten the leading transverse edge of the drag to a traveling bridge, leaving at least 1 foot of the burlap adjacent to the rear edge in contact with the pavement. Ensure that the burlap is moist; clean and change it as required. Burlap drag finishing produces a surface that has a fine, granular or sandy texture without disfiguring marks. Drag joint edges, as necessary, with a small, hand-operated drag. Ensure that tool marks are not present on the finished surface.

PREPARE CONTRACTION JOINTS

13-39. Construct contraction joints on the finished surface. These joints provide a weakened plane that controls cracking from construction. See *Chapter 12* for more information on contraction joints.

FINISH THE EDGES

13-40. Remove soupy mortar along the edges. Fill areas of insufficient mortar with the proper amount of concrete at the right consistency. Eliminate tool marks and ensure that the edges are smooth and true to line. Carefully finish the edges of the slab along the forms and at the joints with an edging tool to form a smooth, rounded surface of the required radius. Patch honeycombed or damaged areas after removing the forms.

CURE THE CONCRETE

13-41. Cure concrete by preventing the loss of moisture and rapid temperature changes for at least 7 days from the beginning of the curing operation. In addition, protect unhardened concrete from rain and flowing water. Ensure that equipment needed for adequate curing and protection is on hand and ready to install before placement begins. When the curing medium requires the use of water, procure rights to water supplies before placement.

13-42. Provide protection, as necessary, to prevent cracking of the pavement caused by temperature changes during the curing period. Protect the sides of concrete slabs for 1 hour after removing the forms. This provides continuous curing treatment to exposed surfaces and also prevents damage to pavement edges and the underlying subgrade. Do not use covering material that contains or is contaminated with sugar (in any form), tannic acid, or any other substance detrimental to portland cement concrete. Remove covering material as necessary to test the surface, correct deficiencies, and saw joints. Keep the concrete surface wet with a water spray until you replace the covering material. If membrane curing is used, respray damaged areas with curing compound immediately after testing and surface correction.

13-43. After the concrete has set sufficiently to prevent marring the surface, cover the forms and the entire surface with wet burlap or cotton mats. Continue the initial moist curing for at least 24 hours. Keep the surface of the newly laid concrete moist until the cover is in place. Continue curing the concrete by any of the following methods:

BURLAP OR COTTON MAT

13-44. Burlap cover consists of two or more layers of burlap with a combined weight of ≥14 ounces per square yard when it is dry. Ensure that burlap is new or has only been used for curing concrete. After shrinkage, cotton mats and burlap strips should be at least 1 foot longer than the entire width of the pavement, including edges. Cotton mats should overlap each other at least 6 inches. Thoroughly wet mats or burlap before placement; keep them wet and in contact with the pavement surface and the edges during the entire curing period.

WATERPROOF-PAPER BLANKET OR IMPERMEABLE SHEET

13-45. Wet the entire surface with a fine water spray, and then cover the surface with waterproof-paper blankets. Polyethylene-coated burlap blankets or polyethylene sheets can also be used. If using burlap, thoroughly saturate it with water before emplacement. Waterproof-paper blankets, polyethylene-coated burlap blankets, or polyethylene sheets should be large enough to cover the entire surface and the edges of the slab.

13-46. Using carefully lapped polyethylene sheets eliminates the need for two curing treatments. This material is also lighter, cheaper, and more easily handled than polyethylene-coated burlap. Place the sheets with the light-colored side up. Ensure that sheets overlap at least 12 inches, with the lapped edges securely weighted down and cemented or taped to form a continuous cover and a completely closed joint. To prevent displacement or billowing from winds, fold the cover over the pavement edges and secure it with earth or other available material. Patch tears and holes immediately, and keep the cover in place during the entire curing period.

MEMBRANE

13-47. Coat the entire exposed surface of the concrete with a pigmented membrane curing compound. Curing compounds are wax- or resin-base. Do not allow the concrete to dry out before applying the membrane. If drying has occurred, moisten the surface with a water spray.

13-48. When the free water has disappeared, apply the curing compound to the finished surface with an approved automatic spraying machine, if available. A spraying machine is self-propelled and rides on the side forms or on previously constructed pavement, straddling the newly paved lane. The machine is equipped with a spraying nozzle(s) that covers the pavement surface with curing compound.

13-49. Mechanically agitate the curing compound in the storage drum during the application. Air agitation can be used to supplement mechanical agitation. Ensure that pressure is sufficient to produce a fine spray, and cover the surface thoroughly and completely with a uniform film. Maintain spraying equipment in excellent mechanical condition, and provide an adequate wind guard for the spray nozzle. Overlap the curing compound so that it gives a two-coat application of ≤200 square feet per gallon.

13-50. Apply curing compound with a hand-operated pressure sprayer on odd widths or shapes of slabs and on concrete surfaces that are exposed by removing forms. Apply the second coat at a right angle from the direction of the first coat. The compound should form a uniform, continuous, cohesive film that will not check, crack, or peel. It should also be free of pinholes and other imperfections. If discontinuities, pinholes, or abrasions exist, apply a third coat of compound to the affected area within 30 minutes of the second coat. Respray concrete surfaces that are subjected to heavy rainfall within 3 hours after the curing compound has been applied.

13-51. Ensure that the concrete is properly cured at the joints and that curing compound does not enter the joints to be sealed with joint-sealing compound. Tightly seal the top of the joint opening and the joint groove at exposed edges

immediately after joint-sawing operations. Spray the concrete around the joint with curing compound to prevent moisture loss from the joint during the curing period.

13-52. Provide an approved standby facility for curing concrete pavement at a location that is readily accessible from the work site. This facility is used if mechanical failure of the spraying equipment or any other conditions prevent correct application of the membrane-curing compound at the proper time. Protect concrete surfaces from pedestrian and vehicular traffic during the curing period except as required for joint-sawing operations, surface tests, and repairs. Respray areas that are damaged by subsequent construction operations.

SEAL JOINTS AND CRACKS

13-53. Use a mechanical grooving machine to groove all cracks 1 inch deep and 1/4 to 5/8 inch wide. Widen the top of the crack without spalling or otherwise damaging the concrete. Remove loose, fractured concrete and thoroughly clean the groove. Completely fill the groove with joint-sealing compound. Joint sealing is discussed in *Chapter 12*.

REMOVE FORMS

13-54. Remove the forms as soon as the concrete can support itself, unless they are used to promote curing. Forms can usually be removed 12 hours after placement; but in cold weather, leave them for 7 days.

TEST THE SURFACE

13-55. After curing is complete, use a 10-foot straightedge to test the finished surface of the pavement for trueness. Operate the straightedge in different positions to reveal irregularities. Correct deviations from specification requirements or remove and replace the pavement. Minor irregularities can usually be corrected by grinding the surface.

TEST THE STRENGTH

13-56. Test the flexural strength of the pavement to ensure conformance with design criteria. Conduct tests at 7 and 28 days or more frequently if necessary. If the required strength is not obtained, adjust the mix or increase the pavement's thickness (see *FM 5-428*).

SECTION III - COLD- AND HOT-WEATHER TECHNIQUES

COLD-WEATHER CONSTRUCTION

13-57. Concrete construction at temperatures <30°F normally requires additional equipment and protective material. At temperatures >30°F, emplace concrete using standard equipment and methods. Use the following techniques when constructing pavement during cold weather:

- Prepare, treat, and protect the subgrade.
- Produce and deliver concrete at temperatures that will compensate for heat loss during placement so that the concrete will harden at a normal or accelerated rate.
- Place and finish the slab with minimal heat loss from the concrete.
- Protect the slab to maintain satisfactory hardening temperatures.

FROZEN SUBGRADE

13-58. Heat is withdrawn from concrete placed on frozen subgrade, causing a retarded rate of hardening. If frost extends a considerable depth in the subgrade, it may withdraw sufficient heat to freeze at least the lower part of the slab. It is important, therefore, that the subgrade be almost or completely free of frost. Whenever possible, prevent the freezing of the subgrade.

Preparation

13-59. Except in unusually protracted cold spells, freezing can be prevented by covering the grade with straw. Before freezing temperatures occur, cover the area with 12 to 24 inches of straw. The thickness required depends on the expected temperature. Dry straw has better insulating properties than wet straw, so cover the straw with tarpaulins or waterproof paper if necessary.

13-60. Uncover the subgrade during form setting and fine grading, and recover it with straw to protect it until concrete placement. If the finished subgrade becomes soft and muddy, remove free water and mud. Add sand, screening, gravel, cinders, or unfrozen earth (tamped or rolled) to produce a firm grade and bring the subgrade to the proper elevation. Heating the added material further protects the subgrade from freezing, and the heat can be retained by covering the subgrade with straw until concrete placement.

Treatment

13-61. Thaw the surface layer of frozen subgrade by burning straw on it, using torches or steam or, where permitted, covering the subgrade with hot sand, screening, or cinders. Burning straw covered with sand removes frost ≥8 inches deep. Spread the straw loosely on the subgrade, about 4 feet deep (50 to 70 pounds per square yard). Flax straw is preferred, but any dry straw can be used; loose straw is better than baled straw. Spread sand on top of the straw at the rate of about 4 cubic yards per 100 square yards (100 to 150 pounds per square yard) of subgrade. Use pit-run sand, blow sand, or any other inexpensive sand that is available. The sand ordinarily weighs the straw down to about half of its original depth. Ignite the straw at the edges. It will smolder for hours under the sand, holding in heat to thaw the subgrade. Cover the thawed subgrade with fresh straw to hold the heat and prevent refreezing. There will be a layer of granular material on the subgrade. It can be left in place or, if necessary, removed during fine grading or before concrete placement. When the frost to be removed is only about 2 inches deep, reduce the thickness of the straw to about 3 feet (30 to 50 pounds per square yard) and apply sand at the rate of about 3 cubic yards per 100 square yards (50 to 100 pounds per square yard) of subgrade.

13-62. Surface layers of frozen subgrade can be thawed with surface heaters, such as those used for patching and resurfacing asphalt pavements. A layer of hot sand or screening can remove frost from subgrade that is frozen to a shallow depth. If the grade permits, the layer of material can be left in place to provide insulation between the concrete and frost that may be left in the subgrade. The amount of heated material required depends on the depth of the frost. A 1-inch layer of heated material may be sufficient when the frost has slightly penetrated the subgrade; however, greater frost depths may require a 3- or 4-inch layer of material. A large volume of material is needed for very thick frost, and this method of thawing is not practical unless suitable material is locally available at a low cost.

13-63. Sand can be heated to about 400°F in a sand-dryer unit similar to that used by a portable or stationary asphalt plant. The unit will produce enough heated sand to cover the subgrade ahead of one concrete paving mixer. Do not place concrete on the sand immediately. Spread the heated sand and cover it with straw the day before concrete is to be placed, allowing the subgrade to thaw. The temperature of the subgrade should not exceed 90°F when the concrete is placed.

13-64. It is unnecessary to remove frost to its full depth from subgrade that does not have appreciable volume change under frost action, provided there is a layer of frost-free material insulating the concrete from the frozen subgrade soil. This is particularly applicable where granular subbases are being used. The required thickness of the unfrozen, insulating layer depends on the depth of the frost that underlies it. Use the methods discussed in *FM 5-428* to determine the required thickness.

EFFECT OF TEMPERATURE

13-65. The rate that concrete hardens and gains strength is retarded by low temperatures and accelerated by high temperatures. Near the freezing point, the rate is very slow; and at temperatures below freezing, there is almost no increase in strength. Concrete that has been kept at a low temperature will later gain strength rapidly when more favorable conditions are provided. Ensure that the concrete's temperature is high enough for it to harden, and keep the concrete at a suitable temperature until it has gained ample strength. It may be necessary to heat concrete ingredients and protect the concrete against low temperatures.

Heating Materials

13-66. If the aggregate is above 50°F, it is only necessary to heat the mixing water. Do not heat the mixing water above 175°F because there is danger of flash setting. If the aggregate is below 47°F, heat the aggregate and the mixing water to bring the concrete's temperature to 70°F. Add heated mixing water to the aggregate to distribute the heat before adding the cement; never place heated mixing water directly in cement.

13-67. Aggregates are more difficult to heat than water, and special equipment is required to heat them in the quantity needed. It is usually possible to produce concrete of the required temperature by heating only the sand; but if the CA contains frozen lumps, it must also be heated.

13-68. Using steam is a practicable method of heating aggregate. Closed steam coils are preferable to open jets due to the moisture-control problem in the aggregate. However, closed steam coils require larger storage piles or bins than those needed when live steam is used because the transfer of heat is slower. Live steam can be fed into the base of stockpiles that have been covered with tarpaulins. Further increases in temperature can be attained by discharging steam through the aggregates in the bins above the weighing hoppers. Best results are obtained when the bins are full and the batches are loaded out at a uniform rate. When using live steam, it is better to use steam under considerable pressure because low pressure is more likely to result in the accumulation of condensed moisture. Variable moisture content in the aggregate can cause undesirable variations in concrete consistency, so watch it carefully.

13-69. Oil-burning heaters can be used to heat concrete by injecting a hot flame into the mixer drum. In mild weather and on small jobs, they can be the sole means for heating concrete. Other heating methods are required in cold weather and on large jobs because oil-burning heaters will only produce a boost in temperature.

Heating Requirements

13-70. Determine the amount of heating necessary to bring the mix to the specified temperature. Assuming that no ice is present in the water or the aggregate, use *Figure 13-1* and the following formula to determine the amount of heat required. Increase temperatures until the concrete temperature is at the desired point.

$$X = \frac{(Wg \times Tg) + (Ws \times Ts) + (Wc \times Tc)}{Wg + Ws + Wc}$$

where—

X = *weighted average temperature of aggregates and cement*
T = *temperature of heated gravel, sand, or cement*
W = *weight of gravel, sand, or cement*
g = *gravel*
s = *sand*
c = *cement*

Example: Determine the amount of heat necessary to make the concrete 55°F using the conditions outlined in *Table 13-1*.

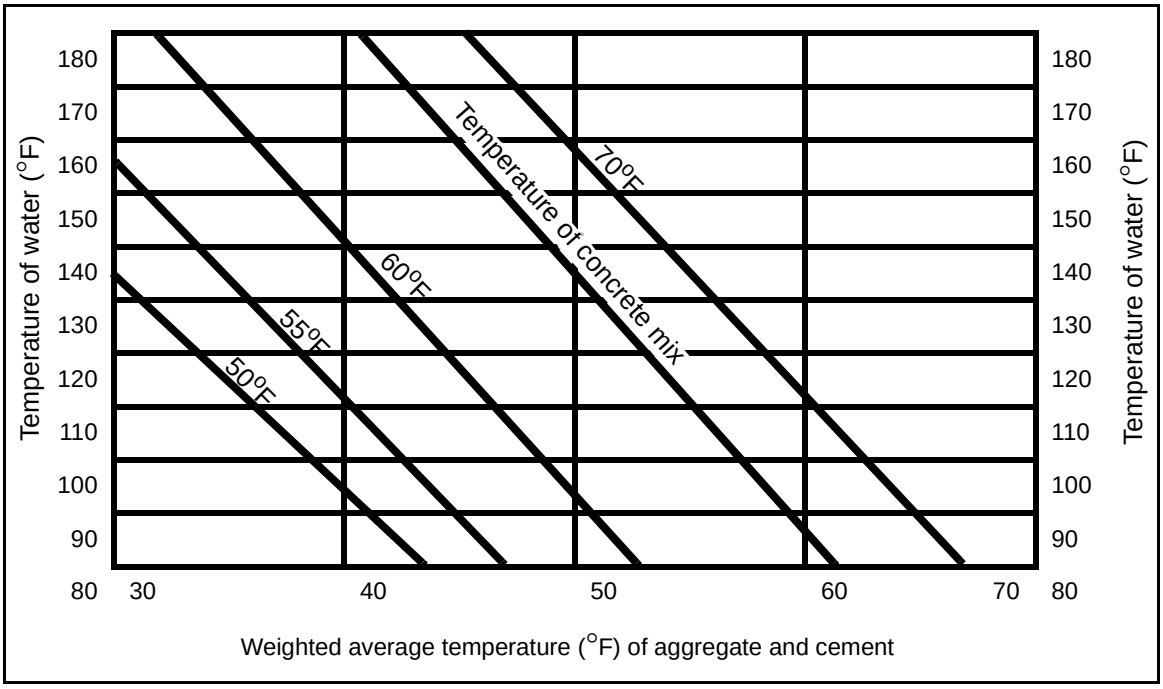

Figure 13-1. Mixing Temperatures Versus Component Temperature

Table 13-1. Sample Conditions

Material	Weight	Temperature
Gravel	2,000 lb	27°F
Sand	1,200 lb	27°F
Cement	600 lb	40°F

Solution: Heat the aggregate >32°F (preferably 35°F) to avoid contact freezing between the aggregate and the water. Heat the water to 137°F (from *Figure 13-1*).

$$X = \frac{(2,000 \times 35) + (1,200 \times 35) + (600 \times 40)}{2,000 + 1,200 + 600}$$

$$X = \frac{(70,000 + 42,000 + 24,000)}{3,800}$$

$$X = \frac{136,000}{3,800} = 35.8 \text{ or } 36°F$$

HEATING EQUIPMENT

13-72. Operate heating equipment several hours before paving starts. A sand dryer should be started early so that an ample supply of heated sand is available when the mixer starts. Make provisions for heating or store aggregates in insulated bins overnight and during shutdowns to keep them from freezing. If steam heating is used, discharge live steam constantly into the covered stockpile throughout the entire 24 hours to ensure an adequate supply of aggregate at the required temperature.

HEAT PRESERVATION

13-73. During the construction of large areas of pavement a comparatively short distance from the plant, such as an airport, a central mixing plant is advantageous. The mix can be transported to the subgrade in dump trucks covered with tarpaulins. In a short haul from the mixer to the subgrade, heat loss is not great. With experience, the temperature at the mixer can be adjusted to obtain the desired temperature of concrete on the subgrade in cold, windy weather. A piece of sheet metal can also be placed over the mixer drum opening (opposite the burner) to reduce heat loss.

PLACING AND FINISHING

13-74. Place and finish the concrete quickly to minimize heat loss. To accelerate finishing, add the minimal amount of mixing water needed. Keep bleeding to a minimum by paying special attention to the mix design. For example, increase the amount of fine material in the sand, make adjustments in the gradation, or use a different type of aggregate.

13-75. When mixing concrete, add calcium chloride to accelerate hardening. If flake-type calcium chloride (78 percent anhydrous calcium chloride) is used, do not exceed 2 pounds per sack of cement. If pellet-type calcium chloride (96 percent anhydrous calcium chloride) is used, do not exceed 1 3/5 pounds per sack of cement. Adding calcium chloride permits quicker finishing and also allows the insulating layer of straw to be placed on the pavement sooner. Concrete >90°F and containing calcium chloride hardens too quickly to permit good finishing results. Finishing can be done in the open if the outside temperature is >15°F and straw, paper, or a cloth cover is applied quickly. If the temperature is <10°F, especially with a strong wind, some form of shelter is required. The shelter may be covered framework that is mounted on wheels and rolled forward as work progresses. Remember to provide enough room for men to work. Use portable space heaters if the shelter alone does not sufficiently reduce heat loss. At very low temperatures, it may be necessary to heat steel side forms before the concrete is placed.

PROTECTION AFTER FINISHING

13-76. Ordinary curing specifications, which are aimed at supplying or retaining sufficient water within the concrete to ensure continuing hydration, can be disregarded during cold weather. Water evaporates very slowly at low temperatures, and the covering applied to protect the pavement from cold sufficiently reduces evaporation and retains plenty of moisture in the concrete.

13-77. Apply a layer of dry straw as soon as possible. If the pavement has not hardened enough to prevent marring from footprints, use light, movable bridges to apply the protective covering. Dry straw has better insulating properties than wet straw, so cover it with waterproof paper or canvas to keep it dry. This also keeps wind from blowing the straw away and exposing portions of the pavement. In extreme weather conditions, use steam pipes under the covering to provide additional heat. Hand forks or adapted mechanical equipment can be used to handle straw. For example, baled and loose straw can be handled with a clamshell that is equipped with long teeth to convert it into a grappling fork.

13-78. The heat of hydration increases the temperature of concrete after it is covered. This increase in temperature cannot be relied on as a substitute for heating materials, but it will offset heat loss during finishing. The temperature of the subgrade rises substantially after the warm concrete is spread. During early hardening of the concrete, this quick rise in temperature causes an appreciable volume change in frozen subgrade when it thaws. Protect concrete until it has attained a flexural strength of at least 400 psi. The length of time protection is required depends on the temperatures maintained and the corresponding rate of hardening. It can range from 72 hours for high-early strength concrete mixtures to 7 to 10 days for normal concrete.

HOT-WEATHER CONSTRUCTION

13-79. High temperatures of concrete or air require adjustments in construction procedures. An increase in the temperature of freshly mixed concrete increases the amount of mixing water needed to maintain the same slump. An increase in temperature from 73 to 120°F would result in an additional 3.3 gallons of mixing water per cubic yard to maintain the same slump in a 5.5-sack mix. The additional 3.3 gallons of water would lower the 28-day strength by approximately 10 percent. If possible, keep the mix temperature below 85°F.

13-80. Protect the water supply from the sun's heat by painting storage tanks with white or aluminum paint. On small projects, water containers can be wrapped with wet burlap, and the evaporation of moisture will produce natural cooling. Other measures that can be taken to keep water cool during extremely hot weather include using underground storage (wells) and burying pipelines. Adding flaked ice to the mix water works well, but necessary quantities of ice are normally unavailable for TO construction. If necessary, lower the temperature of aggregates by sprinkling stockpiles with water. This also satisfies the absorptive qualities of the aggregate, so take this into consideration when designing the concrete mix.

13-81. Under normal summer conditions, moist burlap or paper covering maintains sufficient moisture during the concrete's curing period. Maintaining moisture is very important, because the rapid loss of it during hardening results in crazing (temperature cracking). Crazing causes rapid deterioration of the concrete, especially if the pavement is subjected to freezing and thawing cycles.

13-82. Under extreme drying conditions, counteract moisture loss by replacing some of the evaporated water with a fog spray. Sprayers can be hand-operated or attached to the screed carriage of a concrete finisher. Make the use of fog sprays the exception rather than the rule.

13-83. Normal procedures, such as wetting the subgrade and using curing compound immediately after finishing, become more important during hot weather. If experimenting with expedient hot-weather measures, first try them on small test areas and then expand their use over the entire project.

SECTION IV - REINFORCED AND PRESTRESSED CONCRETE

REINFORCED CONCRETE

13-84. The use of reinforcing steel to increase flexural strength is not normally recommended for pavement construction. Additional load-carrying capacity can be obtained more economically by increasing the slab's thickness. Although welded-wire fabric is sometimes called reinforcing mesh, it does not increase the strength of a slab.

13-85. Welded-wire fabric (*Figure 13-2*) holds together fractured faces of slabs after cracks have formed. Adequate load transfer across a crack is assured by the interlocking action of the rough faces of the crack. Seal cracks with bituminous material to prevent ice damage during cold weather. When welded-wire fabric is used in economical quantities, it does not increase the flexural strength of a slab. It does, however, prevent intermediate cracks from developing in the central portion of a slab when joint spacings are excessive.

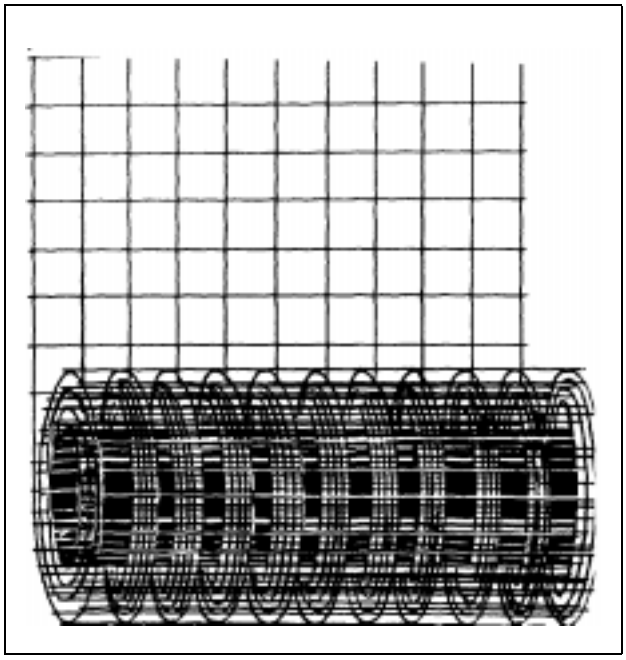

Figure 13-2. Welded-Wire Fabric

13-86. Welded-wire fabric is available in sheets and in rolls. Unroll the fabric counterclockwise (*Figure 13-3*). This is more difficult than unrolling it clockwise, but it counteracts the tendency of the placed end to curl up. After unrolling the fabric, inspect it for irregularities and rust. Remove rust with wire brushes to ensure a good bond with the concrete. Do not oil the fabric because this will prevent bonding.

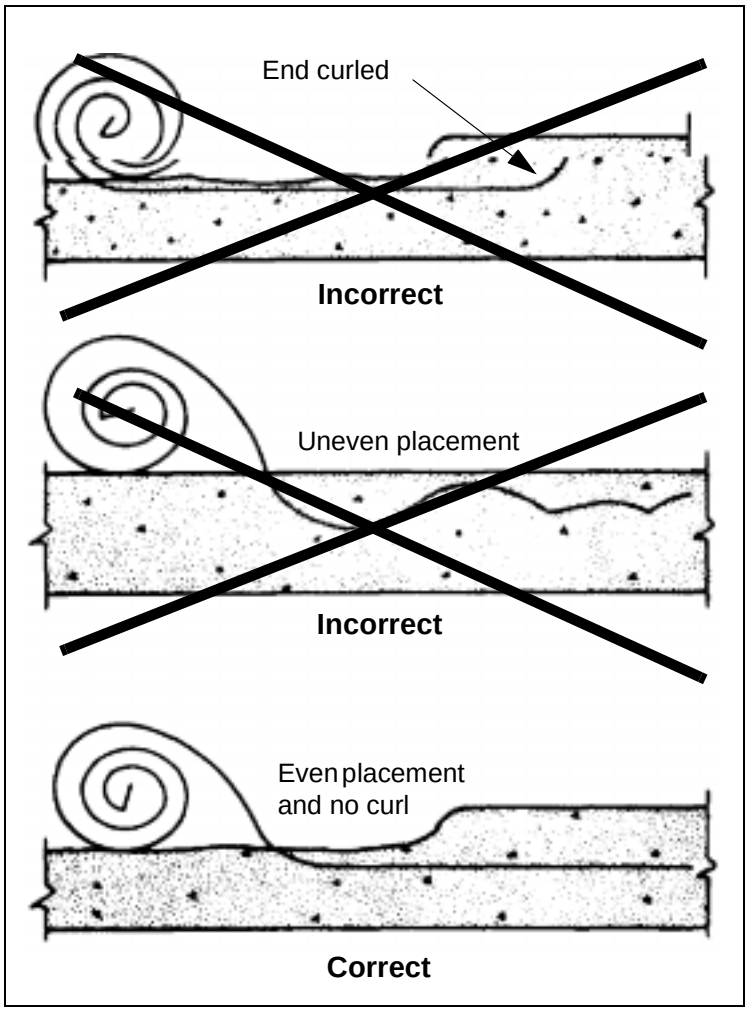

Figure 13-3. Placement of Welded-Wire Fabric

13-87. The exact location of the fabric within the slab is unimportant. Ensure that it is at least 2 inches from any edge or the top and that it is more than 1/2 the slab thickness above the bottom. The usual procedure is to use two spreaders in the paving train. Set the first spreader to level the concrete about 1/2 inch above the desired level for placing the mesh. Place the mesh on the surface and force it into the concrete to the desired depth. Add additional concrete and strike the surface off at the desired grade with the second spreader.

13-88. Common steel, garden fencing with wires spaced 4 to 6 inches apart can be used as expedient welded-wire fabric, but the results are marginal. Do not use aluminum fencing because aluminum combines with chemicals found in some concrete mixes, forming a compound that has a much greater volume and causing the concrete to crack.

PRESTRESSED CONCRETE

13-89. Using prestressed concrete for pavement construction increases the strength of a slab without increasing its thickness, greatly increasing the economy of slabs with high load capacities. Initial compression is usually gained through tension applied to steel wires and rods in the concrete. Because prestressed concrete is elastic, it recovers its original shape after deformation when the load is removed. The actual design and construction of prestressed slabs is beyond the scope of this manual, but the various types of prestressing are discussed below:

- **Internal and external prestressing.** A prestressed concrete structure may be stressed externally or internally. In most cases, the loading is internally applied because many problems affect external prestressing, such as shrinkage and creep.
- **Linear prestressing.** Linear prestressing is used on beams and slabs. The prestressing tendons in linear-prestressed structures are not necessarily straight; they can be bent or curved.
- **Pretensioning and posttensioning.** Pretensioning describes any method of prestressing where the tendons are tensioned before the concrete is placed. Posttensioning is the method of prestressing where the tendon is tensioned after the concrete is hardened. The tendons are anchored against the hardened concrete immediately after prestressing.
- **End-anchored or non-end-anchored tendons.** In pretensioning, tendons transmit prestress to the concrete simply by their bond action near the ends. In posttensioning, tendons are anchored at their ends with mechanical devices to transmit prestress to the concrete.
- **Bonded or unbonded tendons.** Bonded tendons are bonded throughout their length to the surrounding concrete. Non-end-anchored tendons are bonded tendons; end-anchored tendons can be bonded or unbonded to the concrete. In general, the bonding of posttensioned tendons is accomplished by subsequent grouting. When the tendons are unbonded, provide protection from corrosion by galvanizing or greasing.
- **Full or partial prestressing.** Concrete is fully prestressed when there are no tensile stresses under the working load. When tensile stresses are reduced under the working load, the concrete is partially prestressed.

SECTION V - MAINTENANCE AND REPAIR

INTRODUCTION

13-90. Prompt and adequate maintenance—care of joints, repair of cracks, replacement of broken areas, and correction of settlement and drainage faults—greatly extends the life of concrete pavements. Essentially, maintenance involves retaining a smooth surface and keeping the subgrade as dry as possible. A smooth surface protects the pavement from the destructive effects of traffic, and it reduces wear and tear on vehicles.

TYPES OF CEMENT

13-91. Standard portland cement is normally used in concrete construction, but high-early strength portland cement is preferred for repair work because repaired surfaces may be opened to traffic quicker. The supply of high-early strength portland cement in the TO is normally limited; however, some of its characteristics can be obtained by using standard portland cement mixes with low water-cement ratios. In addition, calcium chloride (up to 2 percent) can be used as an admixture with standard portland cement to accelerate the initial set. The mixture will harden quickly and must be placed and finished promptly after mixing.

REPAIR OF JOINTS AND CRACKS

13-92. Seepage causes subgrade failure and allows earth and debris to plug joints and cracks, preventing their closure during hot weather. Inspect concrete pavement periodically for cracks and open joints that need to be cleaned, filled, and sealed to prevent water seepage into the subgrade. Repairing joints and cracks is particularly important in the fall when the pavement is slightly contracted and weather conditions are still favorable for repair. The sealing compound used should stick to the concrete and remain plastic at all temperatures. If the sealing compound becomes brittle and hard, it will crack at low temperatures; if it becomes soft, it will flow from the joint at high temperatures.

13-93. Remove dirt, dead sealing material, and concrete chips from the joint. Removal is more efficient when temperatures are <50°F and joints are opened by the pavement's contraction. Do not remove the existing sealer if it is in good condition. Some trimming of edges may be required to remove overhanging sections of concrete that can break off under traffic. If an expansion joint is filled with an extruding filler, trim it to the level of the surrounding pavement but do not pull it out of the joint. Ensure that joint and crack faces are dry. If a blow torch or other heating device is used to dry surfaces, do not burn live filler in the joint or crack.

13-94. Before resealing an expansion joint, prime it with a thin mixture of 3 or 4 parts gasoline to 1 part asphalt. (If tar is being used to seal a joint, use benzol in place of gasoline.) Flammable materials must be used with caution.

Primer can be applied more successfully by brooming rather than spraying, but brooming is not required if joints or cracks have been dried by the application of heat.

13-95. The following equipment is used to repair joints and cracks:

- Straight or hooked, hand-operated bars are used to clean joints and cracks. Their chisel ends are shaped to fit into crevices.
- Sharp-edged shovels, spades, or straightened hoes are used to cut off extruded joint filler.
- Special-made hooks or plows are pulled along joints with a tractor or a winch line to remove old sealing material in large quantities. The plow tooth is shaped to fit the joint and remove old material to the desired depth.
- Stiff, fiber or wire brooms are used to clean joints and cracks. A power sweeper saves time on extended operations.
- Air compressors are used to blow debris out of cracks and joints. The compressor should deliver at least 100 cubic feet of air per minute at 100 psi.
- Hand-pouring cones are used to pour small quantities of sealer. Large jobs require a distributor that delivers sealing material through a nozzle.
- Conventional kettles are used to heat bituminous materials, asphalt, and tar compounds. Indirect heating is required to heat sealing compounds that contain rubber or latex.

REPAIR OF AREAS

13-96. Areas that show extensive spalling, scaling, or map cracking can be repaired with a bituminous patch or cement mortar. Spalling is the chipping or splintering of sound pavement, and it usually occurs along the joints or cracks in the pavement. Scaling is normally caused by the deterioration or disintegration of concrete and can occur anywhere on the pavement surface. Map cracking is characterized by irregular cracks over the pavement surface.

13-97. When bituminous materials are used, clean loose and foreign material from the damaged area. Scale the area with one or more applications of RC cutback asphalt, fast-setting asphalt emulsion, or light road tar. Immediately cover the area with coarse sand, fine gravel, or fine stone chips. When excessive spalling or scaling has occurred 1 1/2 to 3 inches deep, place a base course of penetration macadam or bituminous premix on the area and follow with a surface treatment. Bituminous patches are the preferred method of repair when closing the area for more than 24 hours would cause great inconvenience to traffic.

13-98. Spalling at joints, deep surface scaling, and deep depressions can be satisfactorily patched with cement mortar. Chip the area to a vertical edge, remove all loose particles, and thoroughly clean the area with a stiff broom or compressed air. Use a 25 percent solution of muriatic (hydrochloric) acid to remove the cement coating from exposed aggregate. Wash the solution away with water and allow the surface to dry.

13-99. Make the cement mortar by thoroughly mixing 1 part cement and 2 parts sand. Add enough water for the mortar to stick lightly together when squeezed by hand. Brush the surface with a thin coat of freshly mixed portland cement paste, and fill the depression with thoroughly compacted cement mortar. Strike off the surface and finish it to match the surrounding slab.

REPAIR OF BREAKS

13-100. Breaks are caused by excessive expansion, unusual loads, inadequate subgrade support, washouts, and war damage. Replacing portions of concrete pavement is necessary when broken areas have become displaced or when the broken pieces are too small to distribute the load to the subgrade without settling or rocking.

13-101. Improve defective subgrades by draining, removing and replacing subgrade material, reconstructing subbases, or using other means as indicated by the cause. Thoroughly tamp the new material in place and bring the damaged portion of the subgrade up to the standard of the surrounding material. Correct poor drainage by installing subdrains or lowering the groundwater level as required.

13-102. In small areas being repaired, use rectangular patches wherever possible. Trim the upper 2 inches of the edge of the old concrete to a vertical face, thus preventing thin edges in the pavement or the patch. The remaining edge depth should be rough and free of loose fragments, dust, and dirt to ensure a good bond with the patch.

CONCRETE PATCHES

13-103. Concrete patches preserve uniformity and are not readily distinguishable from the rest of the pavement. Patches at pavement joints and edges should be about 2 inches thicker than the original pavement, but interior patches should be the same thickness as the existing slab. The concrete mix used for patching depends on the length of time the pavement can be closed to traffic. Normally, the use of the pavement is required as soon as possible. For this reason, use high-early strength portland cement for patching because it permits traffic on the patch in 24 to 72 hours. If high-early strength portland cement is unavailable, use a low water-cement ratio, high cement-factor mixture (dry, rich mix) made with standard portland cement.

13-104. To increase the bond between the patch and the concrete, thoroughly saturate the old concrete with water before placing the concrete patch. If an expansion or contraction joint intersects the patch, construct a joint of the same sort through the new concrete. This prevents concrete failure when rising temperatures subject the area to high compressive stresses.

13-105. Shovel the mix into the hole and thoroughly compact the mix. A surface vibrator provides the best results, but small patches can be compacted by hand-tamping. Use the tamp (a piece of 2- by 4-inch lumber is suitable) along the edges and force the concrete close against the slab. Repeat this procedure again, as late as possible before the concrete hardens so much that finishing cannot be accomplished. Cure the patch using the methods described

earlier in this chapter for new concrete pavements. Keep the patch closed to traffic until it has developed sufficient strength to support the traffic without injuring the concrete. This period varies from one to several days depending on the type of cement and concrete mixture used and the temperature of the pavement.

CEMENT-BOUND MACADAM PATCHES

13-106. Satisfactory repairs can be accomplished quickly by using cement-bound macadam. Prepare the hole as for a concrete patch. Fill the hole with crushed rock, gravel, or broken concrete from the old pavement that is 1 1/2 to 2 1/2 inches in size. Thoroughly compact the material with a vibrator or a roller if available. Spread a thick cement-sand grout (1 part cement to 2 or 2 1/2 parts sand) over the compacted aggregate and thoroughly force it down until the voids are choked. Finish and cure cement-bound macadam patches the same as concrete patches.

13-107. When broken concrete is used to fill the hole, place large pieces first by hand and lay the flat sides down. Use small pieces to fill the voids. Ensure that the broken concrete is firm and free of dust and dirt. In an emergency, cement-bound macadam patches can be temporarily opened to traffic before applying grout.

BITUMINOUS PATCHES

13-108. Broken areas or craters in concrete can be successfully patched with bituminous materials. Penetration macadam or dense, fine-graded bituminous concrete is recommended for this purpose. A thoroughly consolidated base course that gives a patch thickness comparable in load-carrying capacity to the surrounding pavement is necessary. Such patches can be opened to traffic in a few hours if proper materials are used and the layers underneath the finished surface are constructed properly.

EMERGENCY PATCHES

13-109. Emergency patches can be made by using natural soil that is compacted at the proper moisture content. Pack the materials into place from the bottom to the top of the patch. Emergency patches are suitable in winter weather or when immediate, permanent repairs cannot be made. If the surface becomes sloppy under use, cover it lightly with FA.

SETTLEMENTS

13-110. Depressions in pavement caused by the settlement of the subgrade and the slab can be leveled with bituminous materials if settling has ceased and the slab is fully supported by the subgrade. Small broken pieces of pavement rocking under the load or the movement or displacement of the base course will be reflected in the bituminous patch and cause failure. Remove water and dirt from the surface with compressed air, and apply a thin coat of primer. Carefully apply bituminous material to ensure that the surface of the patch is flush with the surrounding pavement (after compaction). Correcting major settlements in concrete pavement may require the use of special methods and equipment to fill voids beneath the pavement by bituminous subsealing or mudjacking. These methods are discussed in *TM 5-624*.

PART THREE

Expedient Operations

The Army's enhanced mobility allows soldiers and units to cover much larger areas of terrain, resulting in assets being dispersed. The need to protect these assets continues, yet the materials and methods for accomplishing this task have lagged behind other military technologies. Research and development have resulted in methods that are now catching up with doctrine; and military engineers have the expedient tools necessary to protect personnel, equipment, and supplies.

The Army is exploring the various techniques available for improving soil conditions. *FMs 5-430-00-1 and 5-410* explain different methods and techniques where expedient paving and surfacing operations can be used in the TO.

In a TO, traffic routes are very important for moving troops and supplies. In a combat area, manpower, materials, equipment, and time are often unavailable for permanent construction so expedient pavements and surfaces are constructed. When determining the materials and methods to use, engineers consider the time available for construction, the required permanency, the type of terrain, and the anticipated type of traffic. Most prefabricated hasty surfaces have short lives and high maintenance outlays, but the ease and speed of construction greatly outweigh the disadvantages when the expedient surface is used as intended. When constructing an expedient pavement or surface—

- Use any method or material that provides a temporary road or airfield.
- Regard an expedient pavement or surface as an emergency measure, not as a permanent installation.
- Use a bituminous surface as an expedient if it meets the criteria for establishing a suitable base, because a bituminous surface's life and capacity can easily be increased by stage construction in depth.

Chapter 14

Expedient Pavements and Surfaces

Throughout history, Army engineers have used expedient surfacing and paving methods. The methods used represent creative engineer responses to deficiencies of equipment, building materials, and trained manpower—circumstances that are typical of wartime field construction.

Although communication routes are vitally important in the TO, the overall need for personnel and equipment may greatly reduce the capability to construct these routes during combat operations. Expedient materials and methods have been developed to alleviate this problem. An

engineer must choose the material and the method after considering the desired permanency, the time available for construction, the terrain type, the anticipated traffic volume and type, and the future use. As long as an engineer uses sound engineering judgment, he is limited only by his ingenuity in selecting expedient materials and methods. For information on paving and surfacing operations using membranes and mats, see *FM 5-430-00-1*.

MATERIALS

14-1. The word *expedient* is often misleading when used in the military sense. An expedient paving or surfacing operation is any procedure that must be completed quickly and whose end result is temporary. Expedient materials are often divided into the following groups:

- **Manufactured materials.** Manufactured materials are produced in a commercial factory. Landing mats are rigid or semirigid portable surfaces that interlock to form the surface of an expedient pavement. These structures contribute to the soil's bearing capacity, but they do not protect the soil from infiltration (water that works its way into the soil through the surface). Membranes do not contribute to the soil's bearing capacity, but they protect the soil from losing strength due to infiltrating water. These surfaces are extremely flexible and also control dust. Under certain conditions, some lower forms of bituminous surfaces are considered to be expedient surfaces.
- **Natural and nonstandard materials.** Natural expedient materials are materials found in nature at the site, such as rock, sand, timber, brush, and soil. Nonstandard expedient materials are materials that are produced for some purpose other than road construction, such as precut lumber, tar paper, sandbags, and bricks. Natural and nonstandard materials can be used to construct pavements and surfaces.

SPECIAL CONSIDERATIONS

14-2. Drainage in expedient operations is just as important as it is in standard paving operations. Since most expedient structures have a short design life, consider seasonal factors when examining the need for drainage. When designing drainage structures, consider the—

- Probability and intensity of precipitation.
- Anticipated storm duration and the use of alternate routes if the planned road is blocked.
- Ratio of time, personnel, and materials used in the original construction of adequate drainage facilities compared to those needed to repair and maintain the inadequately designed road or airfield.
- Cost of replacing or repairing the structure if it is damaged or destroyed by storms.
- Possibility of delays during construction.

14-3. Soil stabilization is discussed in *FMs 5-410 and 5-472*. Soil-stabilized mixtures can be used as a wearing surface if the surface is expected to withstand very light traffic. Soil stabilization generally improves the existing subgrade soil. It increases the soil's bearing capacity so that the base course thickness can be reduced or the base course can be eliminated entirely. Stabilization also assists in dust palliation and soil waterproofing.

14-4. The future use of the structure should also be considered. Present conditions may dictate using expedient materials to construct a road for which future improvements are planned. The expedient materials should be compatible with those contemplated for improvements, thus eliminating delays caused by removing the old material.

ROADS

14-5. Expedient roads are usually constructed as an emergency measure for crossing difficult terrain. Any available material or method that provides a temporary surface can be used. Wet sand, decking from treadway bridges, rocks, rubble, brick, and canvas can be used as expedients. Dust palliatives can be used as a temporary wearing surface or as a base. The importance of subgrade preparation for expedient roads is discussed in *FM 5-430-00-2*. The two types of expedient roads are—

- **Hasty.** Hasty expedient roads are built quickly to last only a few days. They are normally used to cross a terrain obstacle, such as a beach or a marsh. For breaching operations, beach landings, and roadblock detours, hasty expedient roads must be laid rapidly and easily. They are often laid during darkness. Because of these conditions, they must be light, simple to lay, and compact.
- **Heavy.** Heavy expedient roads are built to last until a durable standard road can be constructed; therefore, they require more time for construction. They are used because of special ground conditions or a lack of standard road-construction material.

CROSS-COUNTRY TRACKS

14-6. Construct cross-country tracks by removing main obstructions with hand tools or mechanical equipment and passing over them with tracked or multiwheeled vehicles. This road can carry heavy traffic in dry weather, although motor convoys cause considerable dust clouds that aid the enemy's observation of military movements. If necessary, limit the use of the route to night operations or add dust palliatives to reduce the chance of observation.

ARMY TRACKS

14-7. Use a portable timber mat, known as an *army track* (or tread), to help vehicles pass over loose sand or wet ground. Prepare the mat by lacing 9-foot, 4- by 4-inch or 6- by 6-inch timbers together with cable or thread the timbers onto a cable that passes through holes near the ends of the timbers (*Figure 14-1*, page 14-4). To keep timbers spaced 12 to 14 inches apart, bore a hole at a 45-degree angle to the long axis of each timber and anchor the cables securely

at each end. If desired, fill tracks between the timbers with available material to provide traction and a smooth riding surface.

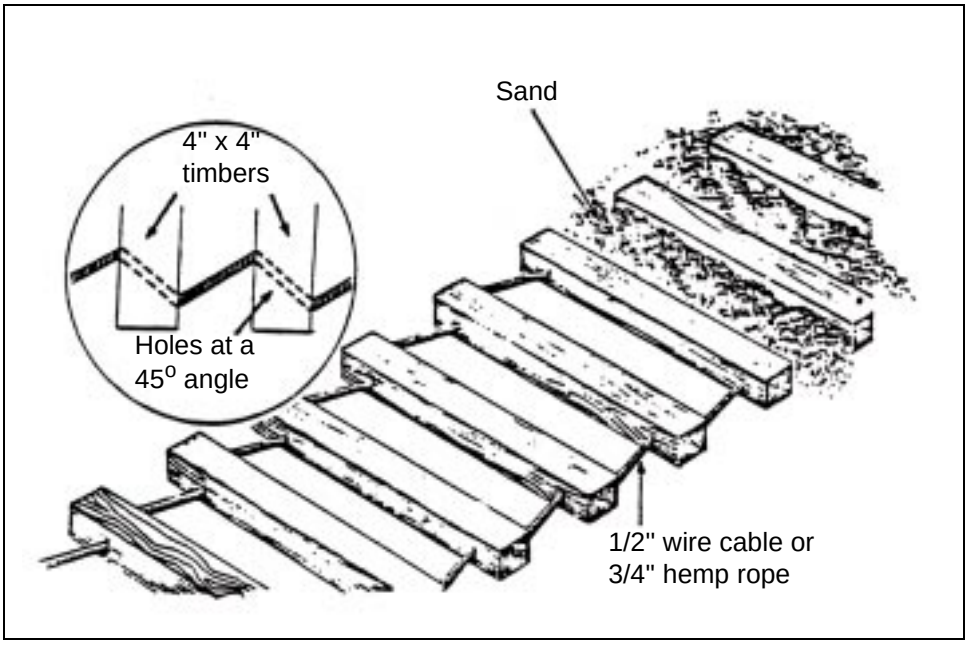

Figure 14-1. Army Track

CHESPALING MATS

14-8. Chespaling roads are composed of a series of mats that are 6 1/2 by 12 feet or larger. Make the mats by placing small, green saplings (6 1/2 feet long and about 1 1/2 inches in diameter) 3 inches apart and wiring them together with wire mesh or strands of heavy smooth wire (*Figure 14-2*). Construct a chespaling road by laying mats lengthwise with a 1-foot side overlap at the junction of the mats. The resulting surface is 12 feet wide. Unless a chespaling road is laid on wet ground, it requires periodic wetting down to retain springiness and prevent splitting. This type of road requires extensive maintenance.

BAMBOO MATS

14-9. In some areas, bamboo mats can be fabricated and used for roads. Make the mats by splitting and soaking 2-inch bamboo rods, and weave the rods as shown in *Figure 14-3*. Keep the bamboo moist while in use. Lay the bamboo mats on the ground with the long dimension perpendicular to the direction of traffic. Stake the mats securely to the ground and wire adjacent mats together. Bamboo mats are excellent for beach roadways and roads out of fords. On firm ground or sand, the mats remain serviceable for 3 or 4 months; on muddy ground or unstable soil, the mats pass as many as 1,500 vehicles before becoming unserviceable.

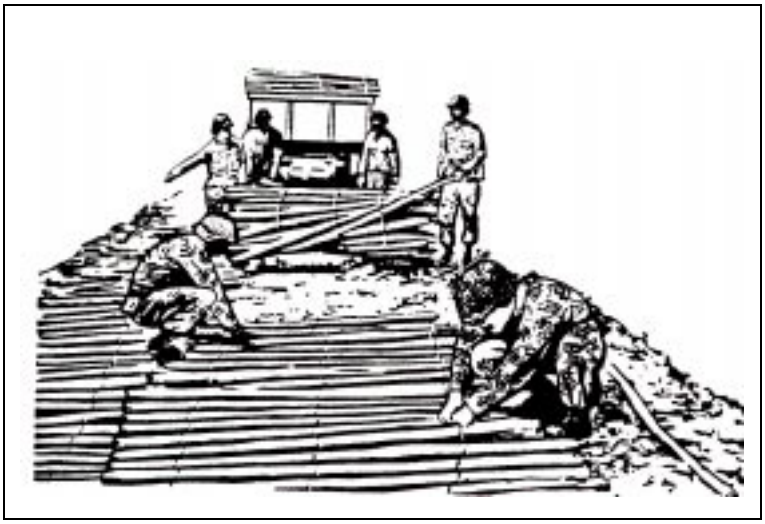

Figure 14-2. Chespaling Mats

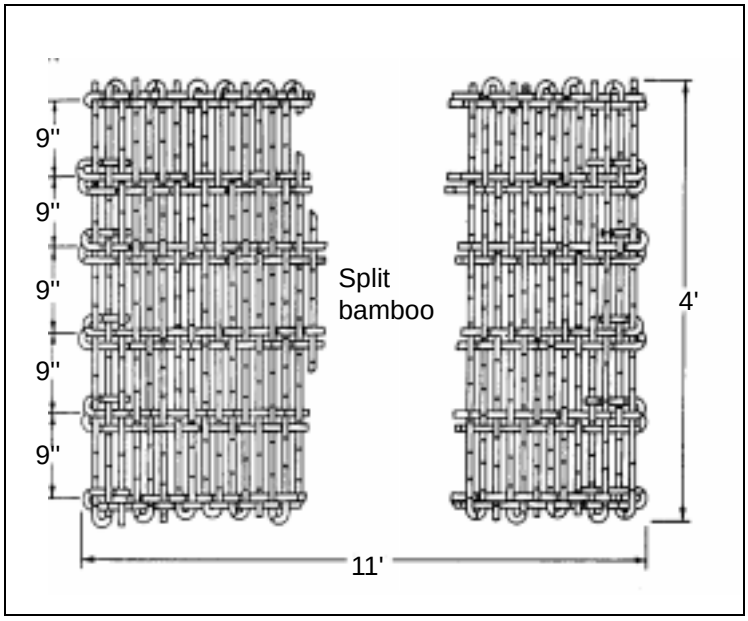

Figure 14-3. Bamboo Mats

SOMMERFELD TRACK

14-10. Although the Sommerfeld track is not a standard supply item, it was a British item in World War II and may appear again in TOs. A Sommerfeld track is light, easily laid, and highly suitable for beach roadways in landing operations. It is made of prefabricated wire-mesh netting and steel bearing rods (*Figure 14-4*).

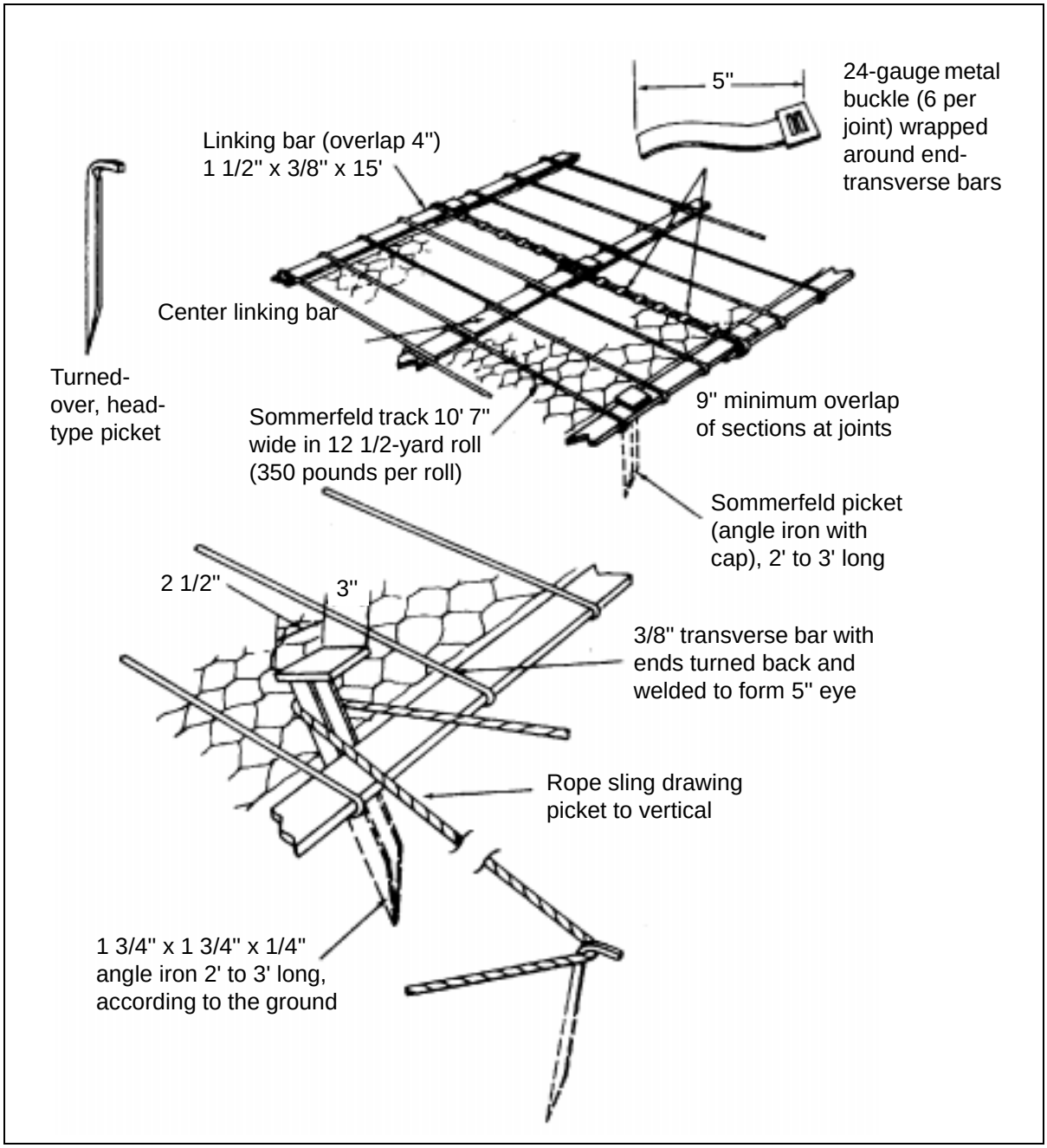

Figure 14-4. Sommerfeld Track

CONSTRUCTION

14-11. Bend steel bearing rods at the ends to form 5-inch loops so that steel flats can be threaded through them. The rods stretch the netting without affecting its flexibility for rolling. It is better to remove four out of every five transverse bearing rods; otherwise, they bend up at the ends under normal traffic and catch in the undercarriage of vehicles. Bend the removed bars into U shapes and use them as extra pickets. Half-inch wire rope can be substituted for the transverse bars. Use special buckles (six for each joint) to connect the end rods of successive rolls of mesh at the transverse joint, and use pickets to anchor the track. Pickets are supplied with the track—25 percent are heavy and 75 percent are light. The heavy pickets are better to use in loose sand and gravel where traffic is heavy. An assembled, 100-yard track weighs about 2 1/2 tons.

14-12. Flexible 9- by 3-foot duckboards are used with a Sommerfeld track to give it added depth. Lay the duckboards end to end, and secure them with ordinary pickets. In addition to duckboards, anything from burlap to corduroy can be placed under the track to increase its depth and flotation in varying degrees.

14-13. To construct a road with a Sommerfeld track, begin by rolling a mat out on the ground. Place flats and rods, and stake the mat by placing one picket at each overlap of steel flats and at the center of each transverse rod. To stretch the track taut after it is laid, start pickets with their heads slanting toward the center and with the flat over the picket and slightly off the ground. As you drive the picket into the ground, place a rope sling over the picket and pull the picket to a vertical position (this draws the mesh taut). The mesh netting is not strong, so the picket must bear against the steel flats or transverse rods.

SOMMERFELD SANDWICH

14-14. For soft beaches or underwater, make a Sommerfeld sandwich by enclosing flexible duckboards between two layers of Sommerfeld track. The upper layer of the sandwich enables vehicle tires to grip; the lower layer gives depth and flotation so that the structure remains on the surface of the sand or mud.

MONKTON PACK

14-15. A Monkton pack is a Sommerfeld track that is folded in 7 1/2-foot lengths with the steel flats already threaded (*Figure 14-5*, page 14-8). The main advantage of a Monkton pack is its speed of laying.

WIRE MESH

14-16. Most wire-mesh surfaces are expedient in the strictest sense of the word. Applied directly to the subgrade, they provide passage for a limited number of vehicles for a short time. Longer life can be obtained by proper subgrade preparation, multilayer or sandwich construction, and frequent staking.

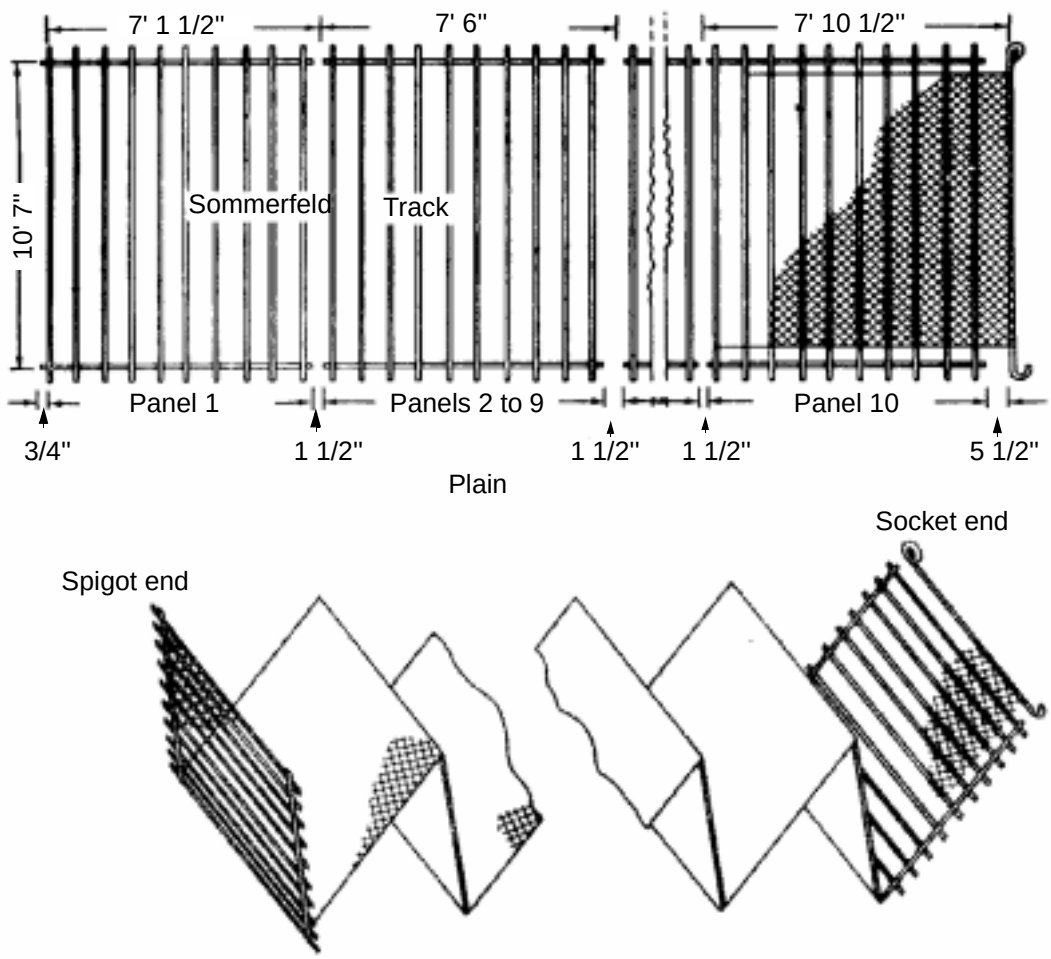

NOTE: The end panel must be folded up.

Figure 14-5. Monkton Pack

14-17. Chicken wire, chain-link wire mesh, cyclone fence, and expanded metal lath may be used as road expedients in sand; but they are unsatisfactory on muddy roads. Increase the effectiveness of these expedients by adding a layer of burlap or similar material underneath to help confine the sand (mandatory with lighter mesh forms, such as chicken wire or cyclone fence). Diagonal wire that is placed across the centerline and attached securely to buried pickets also fortifies lighter meshes. Sandwich-type construction (a layer of wire mesh, a layer of burlap, another layer of wire mesh, and so forth) is often used. Like other road surfaces, the more layers used, the more durable the wire-mesh surface. Wire-mesh expedients must be kept taut to maintain their effectiveness, so picket the edges of a wire-mesh road at 3- to 4-foot intervals.

CHAIN-LINK WIRE MESH

14-18. Chain-link wire mesh (*Figure 14-6*) is 6- to 10-gauge wire that has 1- to 1 1/2-inch mesh. One of the most common types is cyclone fence, and it is usually laid over a layer of burlap. Thread a 3- to 10-gauge strand of wire through the edges of the mesh, and secure the mesh with pickets at 3- to 4-foot intervals. Round, hairpin-type pickets (2 to 3 inches in diameter, about 30 inches long, and bent to shape) are desirable. Since the width of chain-link wire mesh is normally 6 to 8 feet, lay at least two sections to obtain a width that is suitable for traffic. Ensure that sections overlap at least 1 foot. A disadvantage of chain-link fence is that a single break causes raveling.

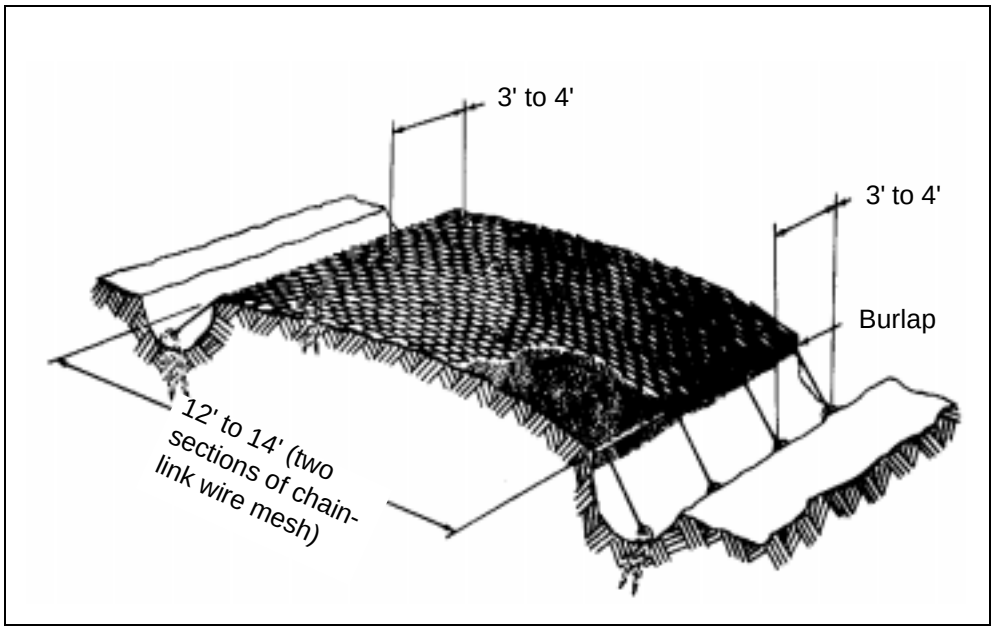

Figure 14-6. Chain-Link Wire Mesh

CHICKEN WIRE AND EXPANDED METAL LATH

14-19. Chicken wire and expanded metal lath are laid essentially the same as chain-link wire mesh. If 3-foot-wide chicken wire is used, lay the roadway in 5-foot widths with 1-foot overlaps and fasten the sections together with plain wire. One layer of chicken wire is sufficient for lightweight traffic; three layers are required to sustain trucks. Expedient road surfacing made from chicken wire requires constant maintenance.

HEAVY EXPEDIENT ROADS AND PIONEER TRAILS

14-20. Construct heavy expedient roads in the same general manner as ordinary roads. Since heavy expedient roads are often used over muddy and swampy ground, it may be impossible to completely follow normal construction methods. Whenever possible—

- Clear the road location.
- Install drainage facilities.

- Grade the foundation. Crown it from the center or side, depending on the type of road to be laid. If required, give it a transverse slope.
- Lay the expedient material. Ensure that it has good bearing and is fastened in place.
- Construct one-way roads with turnouts every 1/4 mile. If two-way traffic is desired, lay single tracks side by side.
- Maintain the road. Expedient roads require more maintenance than ordinary roads.
- Replace expedient roads with more durable roads as soon as possible.

MAT ROADS

14-21. In general, M8 and M9 landing mats can be used for roads as well as airfields. Lay the mats transversely as shown in *Figure 14-7* or lay them longitudinally to form a tread-type road.

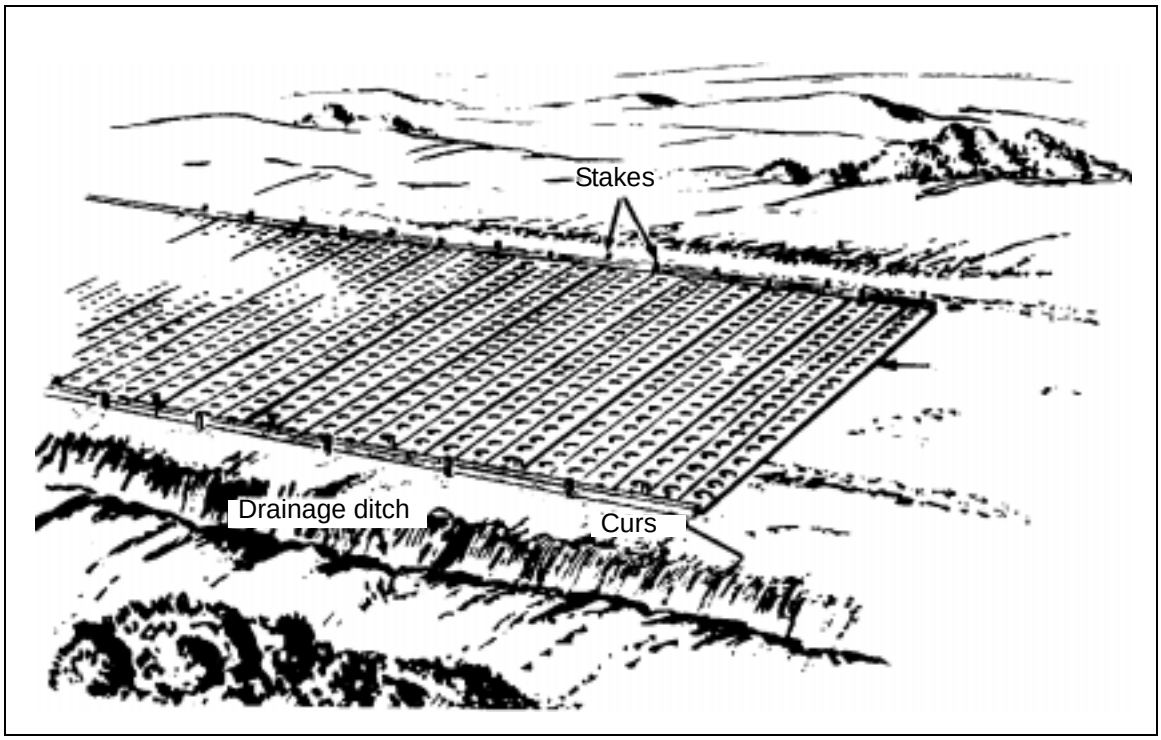

Figure 14-7. Mat Roads

14-22. Landing mats can be placed directly on the sand in the length and width desired, but burlap or straw underneath the planking greatly improves flotation. The smoother and firmer the subgrade, the better the resulting road. Place mats so that their long axis are perpendicular to the flow of traffic and the panels are locked together. If a width greater than the effective length of one plank is constructed, manufactured, or fabricated in the field, use half sections to facilitate joint staggering. One layer of mat constitutes a hasty road. Laying a second layer of steel mat as a tread-type road over the initial layer further increases the road's effectiveness. When a landing mat is placed

directly over a muddy base, use membrane surfacing, brush, or burlap over the base to prevent oozing mud and increase the road's effectiveness.

14-23. Use several layers of mat to construct a heavy expedient road, and lay the panels in each successive layer perpendicular to each other. Prevent the tendency of the mat to curl up at the ends by making an excavation at the edges of the road. The excavation should be about 1 foot deep with a 3-to-1 slope on the side of the excavation nearest the road. Bend the mats to fit the trench, place them in position, and backfill the excavation over them. Secure the mats by one of the following methods:

- Use a curb of logs or finished timber on the outside edge of the road.
- Wire the edges tightly to buried logs that are laid parallel to the road.
- Stake the edges down.

14-24. Landing mats require constant maintenance and can be damaged by tracked vehicles to the point where salvage and reuse are impossible. The mats are very slippery when wet, making them dangerous for moving vehicles.

PLANK ROADS

14-25. Use plank roads for crossing short sections of loose sand or wet, soft ground. Plank roads last several months when they are well-built and have an adequate base. Planks used for flooring, stringers, or sleepers should be 3 to 4 inches thick, 8 to 12 inches wide, and at least 13 feet long. When desired, rough, unfinished 3- by 10-inch planks can replace the 4- by 10-inch timbers shown in *Figure 14-8*.

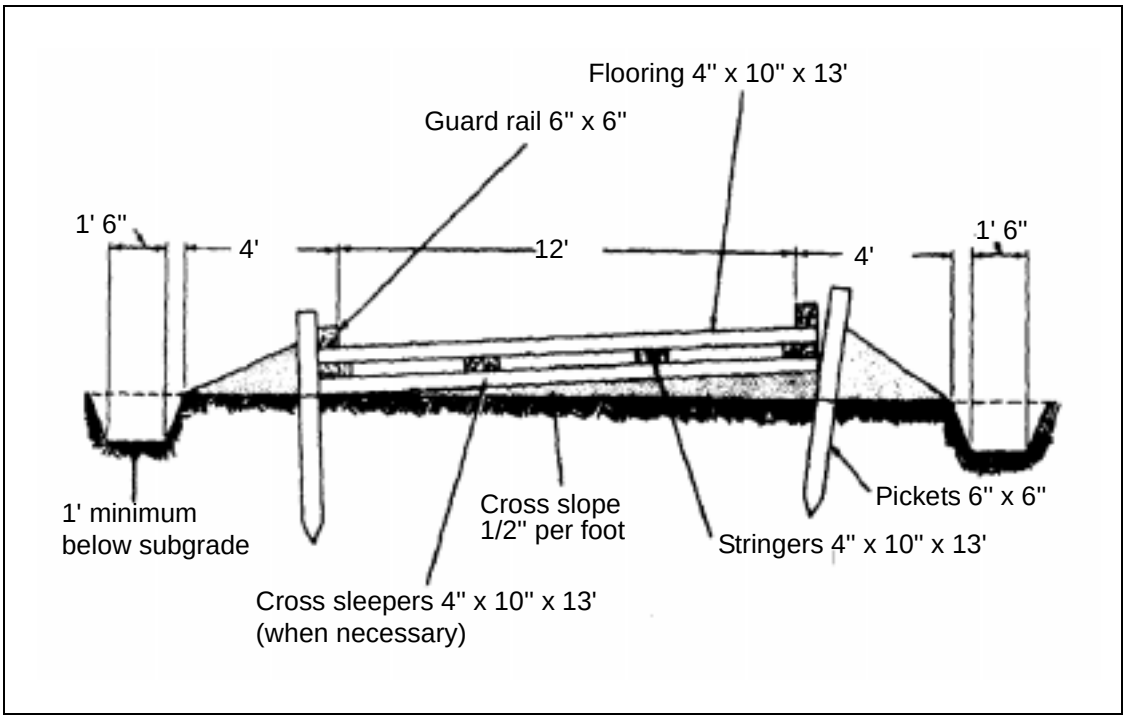

Figure 14-8. Plank Road

14-26. Lay stringers in regular rows parallel to the centerline on 3-foot centers. Stagger the joints, and lay floor planks across the stringers. When seasoned lumber is used, leave 1-inch gaps between the stringers to allow for swelling when the lumber absorbs moisture. Spike the planks to every stringer. Place 6-inch-deep guardrails on each side, leaving a 12-inch gap between successive lengths of the guardrail for drainage of surface water. Place pickets along each side at 15-foot intervals to hold the roadway in line. If necessary, place corduroy, fascine, or other expedient cross sleepers on 3- to 5-foot centers to hold stringers in the correct position or to gain depth for the structure. To allow for drainage, construct the base with a transverse slope versus a center crown. Place treads over the floor planks parallel to the line of traffic to produce a smoother riding surface.

PLANK-TREAD ROADS

14-27. Plank-tread roads can be constructed easily and rapidly, and they require less material than ordinary plank roads. Lay sleepers, which are made of 2- by 10-inch material that is 12 to 16 feet long, across the centerline of the road. Embed the sleepers in the ground on 10- to 16-foot centers. The spacing of the sleepers depends on the length of plank available for tread. If the sleepers are more than 2 feet thick or hold the flooring too high off the ground, reduce the amount of spacing so that the flooring can carry the load without bending excessively. Lay flooring planks, 2 to 3 inches thick by 10 to 12 inches wide, on top of the crossties. A 2-inch plank will suffice as road surfacing in most cases; however, a 3-inch plank should be used for extremely severe conditions. Tread sections can be fabricated and laid directly from a truck bed to facilitate placement. Curbs are normally placed on the inside of each tread to allow passage of the narrowest vehicle using the road. *Figure 14-9* outlines the construction details for a plank-tread road.

LOG-TREAD AND LOG-PLANK ROADS

14-28. Log-tread roads can also be constructed easily and rapidly with minimum material. To prevent the logs from rolling sideways under traffic, securely spike them to the crossties. The spacing of the crossties depends on subgrade conditions, but it is normally about 3 feet. Use curbs as described for corduroy or tread roads. A log-plank road is a log-tread road with the center filled.

CORDUROY ROADS

14-29. If timber is conveniently available, a corduroy road can be built over soft ground. Corduroy roads are made by laying logs (split or round) across the centerline of the road. The three general types of corduroy roads are—

- **Standard corduroy.** A standard corduroy road consists of crossed logs that are laid directly on the ground. This is the most frequently used corduroy road and consists of one layer. To construct a standard corduroy road—
  - Place 6- to 8-inch-diameter, 12-foot-long logs adjacent to each other (butt to tip).
  - Place 6-inch-diameter logs along the edges of the roadway, and wire or drift-pin them in place.

- Drive 4-foot-long pickets into the ground at regular intervals along the outside edges of the road to hold it in place.
- Fill the chinks between logs with brush, rubble, or twigs. Cover the entire surface with a layer of gravel or dirt to make the surface smoother.
- Construct side ditches and culverts the same as for normal roads.

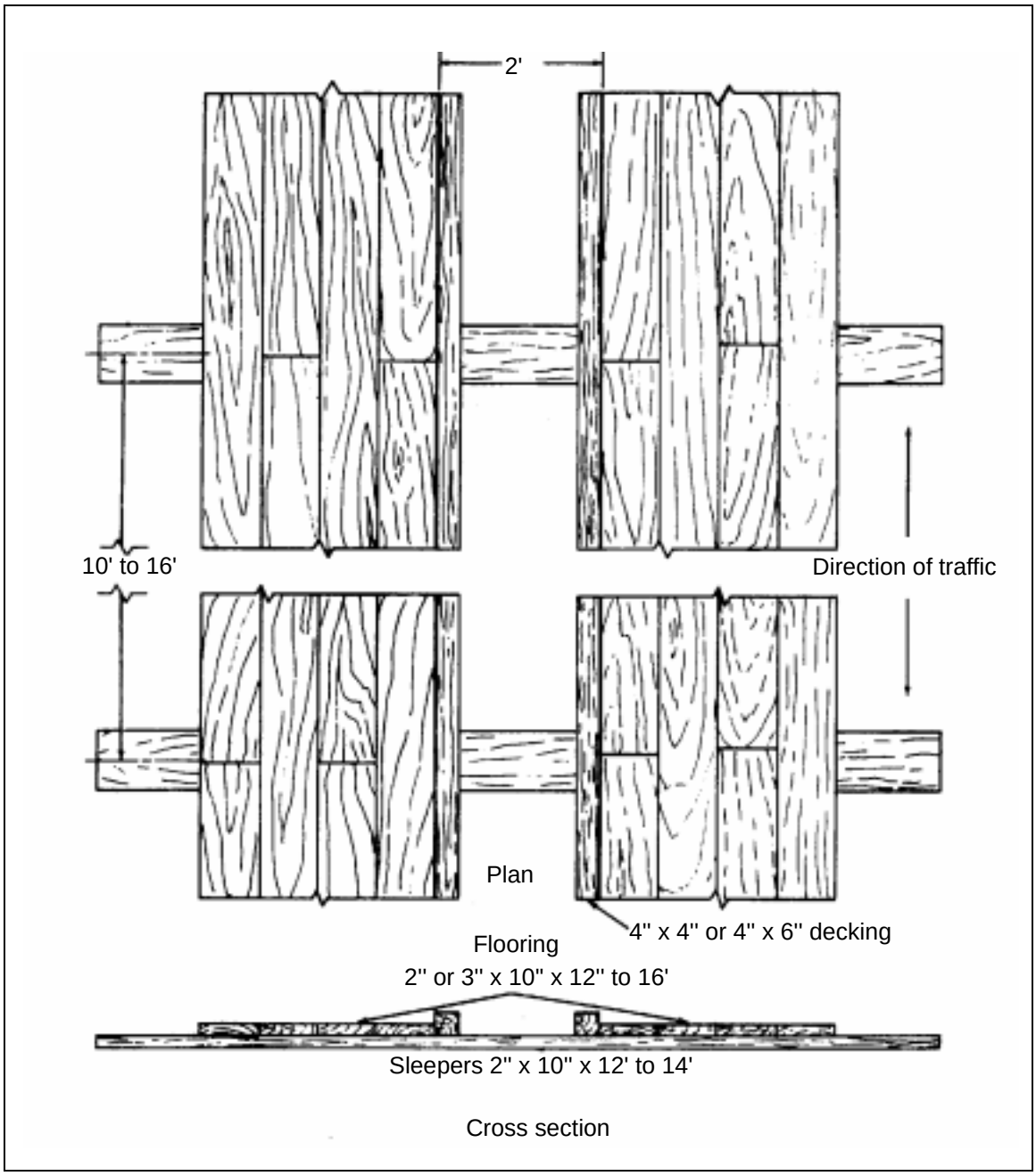

Figure 14-9. Plank-Tread Road

- **Corduroy with log stringers.** This is basically a standard corduroy road that is more substantial and has two layers. Construct it by placing log stringers parallel to the centerline on 3-foot centers, and lay the corduroy over the stringers as described above for standard corduroy. Securely pin the corduroy decking to the stringers, and prepare the surface as shown in *Figure 14-10*.
- **Heavy corduroy.** A heavy corduroy road consists of crossed logs and stringers that are laid on sleepers. A heavy corduroy road has three layers. Place sleepers (heavy logs that are 10 to 12 inches in diameter and long enough to carry the entire road) at right angles to the centerline on 4-foot centers. Build a heavy corduroy road with log stringers on top of the sleepers as shown in *Figure 14-11*.

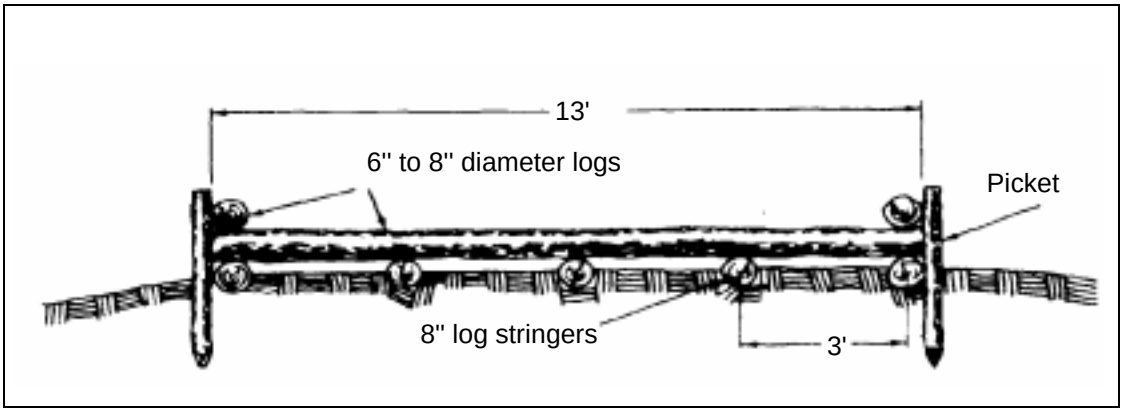

Figure 14-10. Corduroy Road With Log Stringers

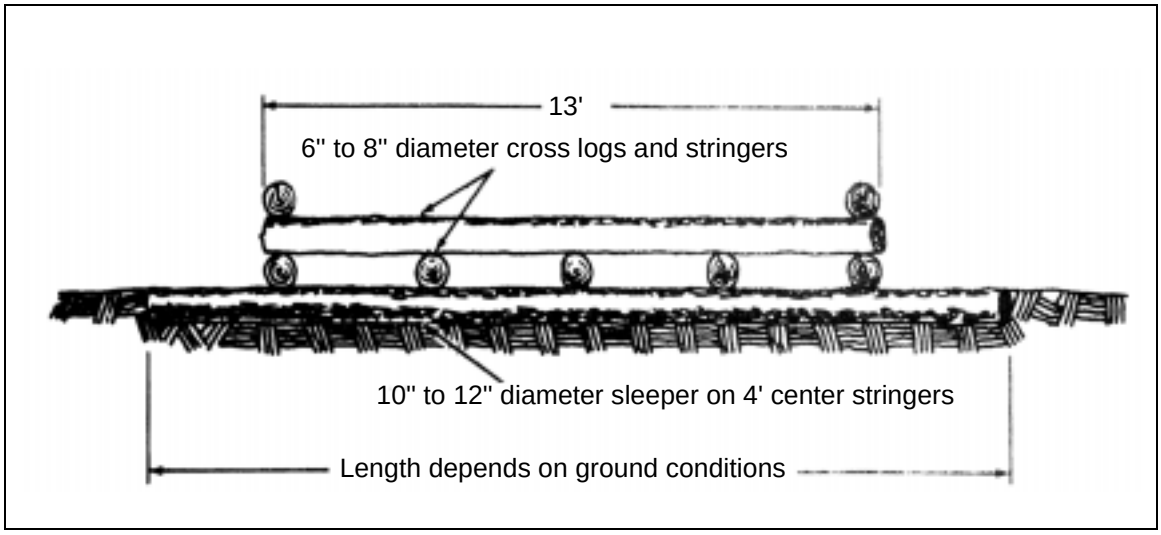

Figure 14-11. Heavy Corduroy Road

14-30. The softer the ground, the heavier the type of corduroy required. This is the basic rule for determining the type of corduroy road needed. Stringers and sleepers do not increase the bearing capacity of the decking. They serve as a crib to keep the road surface above the level of the surrounding mud. Stringers and sleepers sink into the ground until they reach a stratum that is capable of supporting the load. In other words, they provide depth for a stable structure. On fairly firm ground, standard corduroy is adequate; on soft ground, stringers are needed; and on extremely soft ground, sleepers are required. Portable corduroy mats (made by wiring together 4-inch-diameter logs) can be prefabricated and put down quickly when needed. Corduroy mats are very similar to chespaling mats, but they are heavier.

14-31. The greatest objection to corduroy roads is the roughness of the surface. Gravel, earth, straw, tall weeds, or fine brush can be covered with earth to make the surface smoother. If the foundation is stable and suitable materials are available to construct a thin covering over the corduroy, a corduroy road is a good temporary road. Provide a blanket of earth or gravel to protect the surface if tracked vehicles use the road.

Diagonal Corduroy

14-32. A diagonal corduroy road is simply a modified corduroy road, and it can be used for any type of corduroy road. The only difference in construction is that the corduroy is placed at a 45-degree angle to the centerline. Diagonal corduroy decreases the impact load on the decking because only one wheel at a time comes in contact with a log. It provides for longitudinal and lateral road distribution and is preferred for heavy traffic. However, diagonal corduroy has a higher maintenance factor than typical corduroy roads and also requires logs that are 50 percent longer.

Fascine Corduroy

14-33. A fascine corduroy road is a suitable expedient in swampy or boggy ground where logs or standing timber are not readily available; but quantities of secondary growth, small trees, brush, or saplings are available for binding into bundles. Fascines are used in much the same manner as logs and are built from straight pieces on the outside. Bind bundles tightly every 18 inches with wire or tarred rope. Lay bundles crosswise on sleepers of saplings that are laid parallel to the centerline of the road on 2- to 4-foot centers. Attach wire ties to the sleepers at 2-foot intervals. Lay the fascines as compactly as possible on the sleepers, and pull the wire ties above the surface of the fascines. Then, fasten longitudinal binders of saplings to the fascines and sleepers, and squeeze and tie them together as tightly as possible.

14-34. This construction results in a continuous mat of fascines (*Figure 14-12*, page 14-16). Place brush, sod, reeds, grass, hay, and/or earth on the fascine mat to form the finished roadway. Wet down a fascine road periodically to keep brush springy and pliable. A fascine corduroy road will carry loads that compare to those carried by a corduroy log road, but a fascine road is harder to construct and requires constant attention and maintenance.

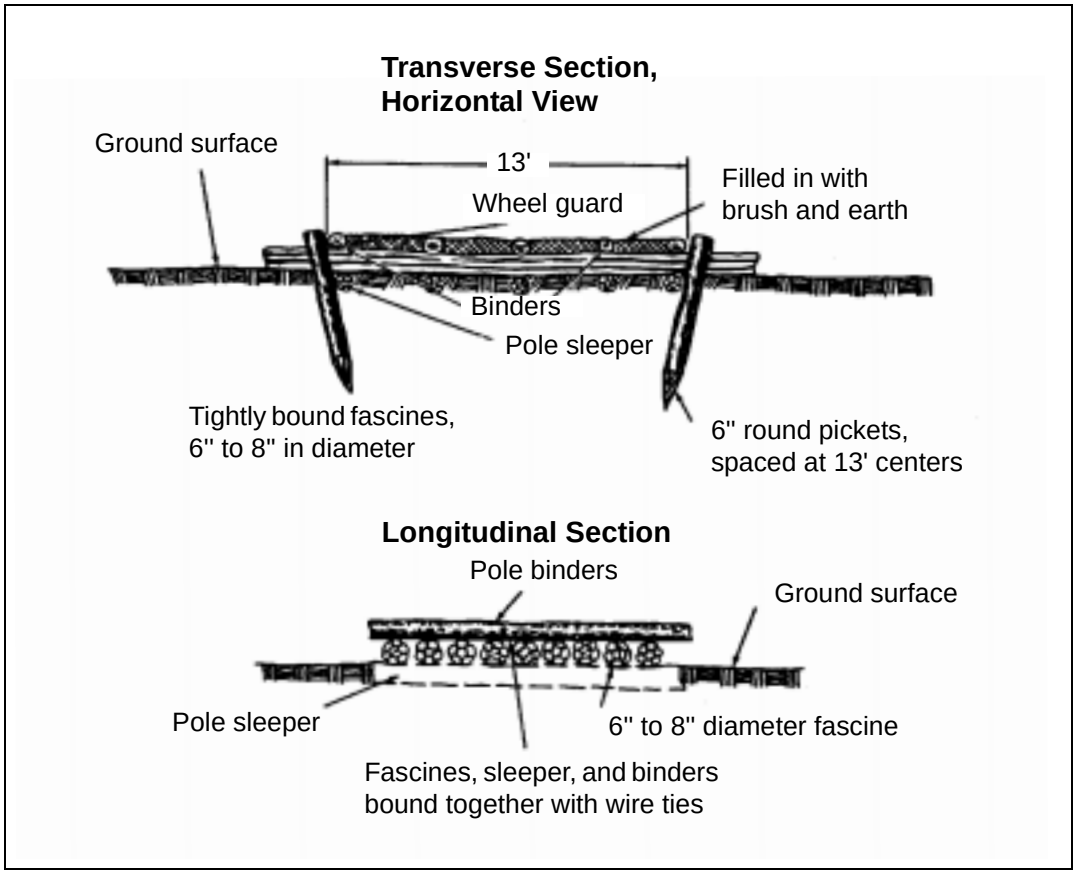

Figure 14-12. Fascine Corduroy Road

Mats Over Corduroy

14-35. Placing two or more layers of mats over corduroy allows the road to be used as a heavy expedient if the proper construction methods are used. Place the lower layer longitudinally and the upper layer transversely to the direction of traffic. In addition, mats can sometimes be used successfully with other methods.

PIONEER ROADS

14-36. Expedient roads are normally constructed when circumstances prevent using standard construction methods. A pioneer road uses standard construction methods, but it is the simplest and most inexpensive type of ordinary road. Location is the main difference between a pioneer road and other roads. It is justified by primitive conditions and low service requirements and characterized by the many changes in grade (a high-maximum grade is acceptable for short stretches). Vehicles may have to be hauled short distances while the grade is being improved; however, do not contemplate building a road that does not meet known service needs.

14-37. A pioneer road has limitations of grade, curvature, and standard of service. It does not allow the indiscriminate choice of excessive grades or

curves. Avoid excessive or unnecessary use of long-sustained low grades and the unwarranted use of broken or steep grades. Even though a pioneer road may eventually be abandoned, always build a pioneer road as if it were a permanent means of passage. Ensure that a quality roadbed is established and that the road renders adequate service during its life, whether short or long. If possible, improve pioneer roads by stages rather than abandon them for another route.

MAT REPAIR

14-38. M8 and M9 mats are flexible and can be rolled toward one side of the runway to permit subgrade repairs. Bombing causes large craters with twisted, warped, broken planks that are separated and disconnected. Create a square or rectangular opening in the mat by removing planks or cut them with a torch. Properly fill and compact the crater in shallow lifts, place replacement planks in the hole of the mat and, if necessary, weld the planks.

SURFACE REPAIR WITH BRICK

14-39. Due to the unavailability of materials or a short deadline for opening a surface to traffic, it may be impossible to match the original construction when repairing damaged surfaces. Brick is a very good expedient because repairs last a long time and permit immediate use of the surface. In addition, brick is normally available since it is a widely used building material. Even roads and airfields with extensive crater damage can be successfully repaired with brick as shown in *Figure 14-13*, page 14-18.

14-40. Build up the subgrade in the same manner as the original concrete or bituminous surface. Place a 2- to 3-inch sand cushion on the subbase, and grade the cushion to a slight crown. This allows for compacting of the sand cushion and settling of the subgrade when the brick patch is finished and rolled. When available, use an admixture of cement to stabilize the sand cushion. Stretch a line across the center of the hole and set it to grade. Lay the first row of bricks to this line. For best results, set bricks in a herringbone pattern with the stretcher side up. Brush dry cement grout into spaces between bricks to form a seal, and roll the entire patch with a 5- to 8-ton roller.

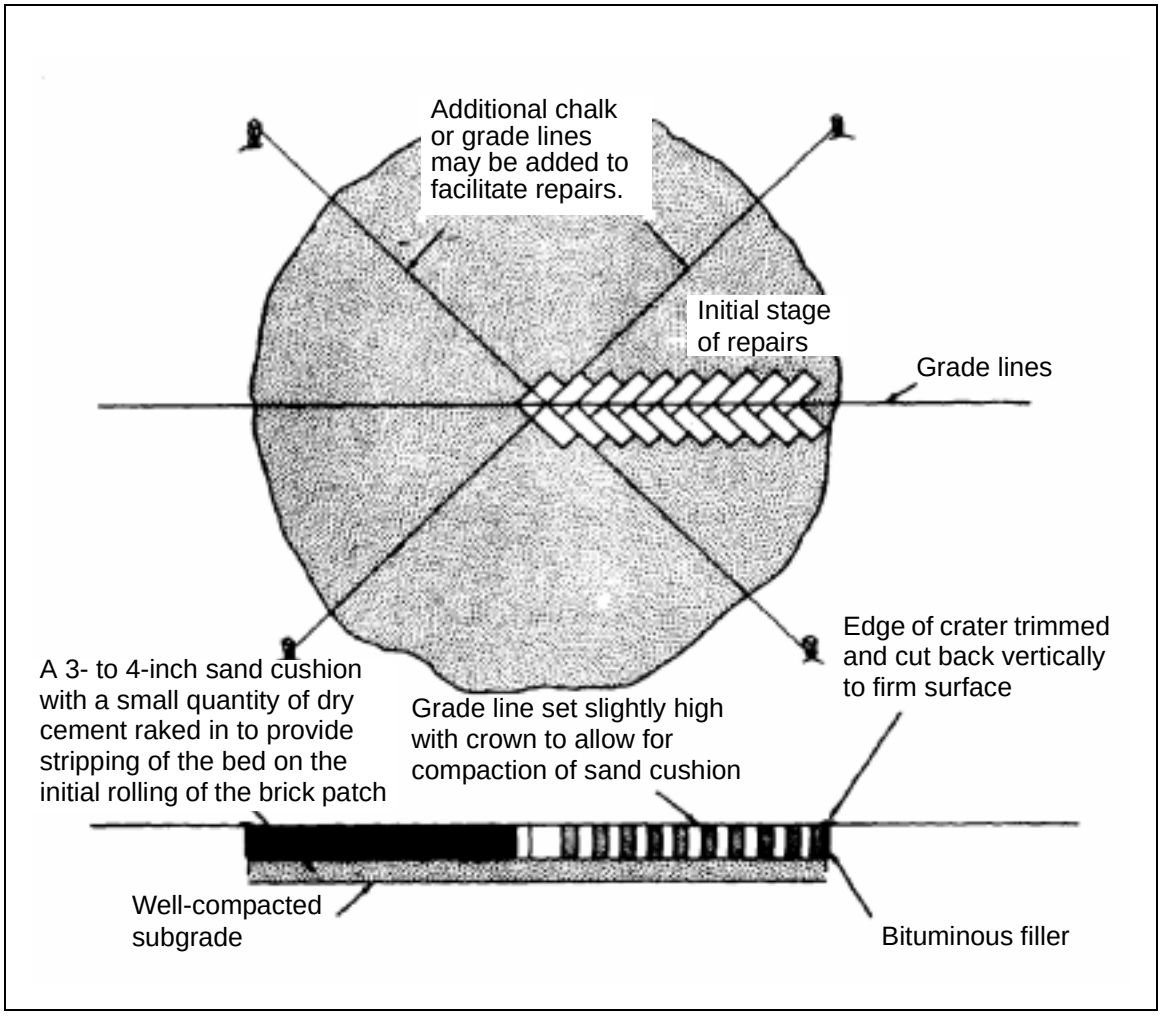

Figure 14-13. Crater Repair Using Brick

Appendix A

Metric Conversions

This appendix complies with current Army directives which state that the metric system will be incorporated into all new publications. *Table A-1* is a conversion chart.

Table A-1. Metric Conversion Chart

US Units	Multiplied By	Metric Units
Cubic feet	0.0283	Cubic meters
Cubic inches	16.39	Cubic centimeters
Cubic yards	0.765	Cubic meters
Feet	0.305	Meters
Gallons	3.79	Liters
Inches	2.54	Centimeters
Long tons	1.016	Metric tons
Miles (nautical)	1.853	Kilometers
Miles (statistic)	1.609	Kilometers
Ounces	28.4	Grams
Ounces (liquid)	29.6	Milliliters
Pounds	0.454	Kilograms
Quarts	0.946	Liters
Short tons	0.907	Metric tons
Square feet	0.0929	Square meters
Square inches	6.45	Square centimeters
Square yards	0.836	Square meters
Yards	0.914	Meters

Table A-1. Metric Conversion Chart (continued)

Metric Units	Multiplied By	US Units
Centimeters	0.0394	Inches
Cubic centimeters	0.061	Cubic inches
Cubic meters	35.3	Cubic feet
Cubic meters	1.308	Cubic yards
Grams	0.0353	Ounces
Kilograms	2.2	Pounds
Kilometers	0.621	Miles (statistic)
Kilometers	0.54	Miles (nautical)
Liters	1.057	Quarts
Liters	0.264	Gallons
Meters	3.28	Feet
Meters	1.094	Yards
Metric tons	1.102	Short tons
Metric tons	0.984	Long tons
Milliliters	0.0338	Ounces (liquid)
Square centimeters	0.155	Square inches
Square meters	10.76	Square feet
Square meters	1.196	Square yards

Appendix B

Checklist for Concrete Paving

Prepare a checklist that covers the various construction operations. Refer to it frequently to ensure that important items are not overlooked. The checklist shown in *Table B-1* was devised for a typical paving project and can be used as a guide when preparing a checklist for your project. Details will obviously vary based on specification requirements and construction procedures.

Table B-1. Sample Checklist

	Subgrade
❒	Soft spots were identified by proof-rolling or other means.
❒	Soft material was removed, replaced, and recompacted to provide firm, uniform support.
	Subbase
❒	Compaction was done in an orderly process.
	Subgrade materials were spread.
	Water was added as required.
	Water was mixed into the subbase until the moisture content and the gradation were uniform.
❒	Subbase width met plan specifications.
❒	Grade was slightly higher than the pavement fine-grade elevation.
❒	Soft material was removed, replaced, and recompacted to provide uniform pavement support.
	Forms
❒	Form subgrade was made by slight cutting.
❒	Forms were uniformly supported.
❒	Forms were in good condition.
	Forms were clean and in good repair.
	Form base was perpendicular to the face.
	Forms were true in all directions (check with a straightedge).
❒	Locks were securely fastened.
❒	Pins were securely locked in stake pockets.
❒	Forms were true to a smooth line at the correct distance from the centerline.
	Fine Grade
❒	Fine-grade machine was cutting rather than filling.
❒	Subgrade planer was cutting rather than filling.
❒	Moisture was added as required during the final compaction, and the loosened layer was recompacted to the specified density.
❒	Elevation was checked with a scratch template.

Table B-1. Sample Checklist (continued)

❒	Fine-grade material was cleaned out to the full depth of the forms (observe forms under the fine-grade machine for deflection or side movement).
	Steel
❒	Keyway forms along longitudinal joints were fastened to roadway forms at the correct elevation.
❒	Tie bars or hook bolts were correctly and securely placed (single-lane paving).
	Baskets were firmly and uniformly supported (small stones used as supports are unsatisfactory).
	Baskets were securely staked to prevent movement.
	Expansion joint filler was at the proper elevation and perpendicular to the subgrade.
	Expansion joint filler was perpendicular to the form line and in true line across the pavement.
	Dowels of proper dimensions and spacing were placed parallel to the centerline on top of the form line.
	Dowels were greased on one side of the joint. (Dowels are usually coated by the fabricator, and alternate dowels are coated on the opposite side of the joint. The shop coating indicates the unwelded end of the dowel. A uniform, thin coat of grease or graphite mixture should be applied to the free half of each dowel.)
	Grease covered the bottom of the dowels. (The bottom is frequently missed if brushes are used to paint the dowels.)
	Expansion caps were placed in the expansion joints on the greased ends of the dowels.
❒	Mesh or bar mat reinforcement was distributed, ready for use, adjacent to the paving area and far enough to the side that workers did not walk on it.
❒	Tie bars were of proper dimensions and were correctly placed.
	Final Preparation for Concrete
❒	Forms were thoroughly oiled.
❒	Subbase material was thoroughly saturated. (Intermittent sprinkling several hundred feet ahead of the paver may be required throughout the day.)
❒	Final check of the surface compaction and the fine-grade elevation was made. (A light subgrade tester may be kept immediately ahead of concrete operations to check the elevation.)
❒	Final check of line and surface forms was made.
❒	Batches were dumped into the skip, no materials were lost on the subgrade, and no materials stuck in the truck.
	Placing Concrete
❒	Minimum drop from the bucket was maintained. (The bucket should just clear the form when moving out on the boom.)
❒	Concrete was dumped evenly over the subgrade.
❒	Concrete had a satisfactory appearance.
	Concrete was stiff enough to stand without flowing but was easily workable without segregation.
	Aggregate particles were covered with paste and sufficient mortar to fill voids in the CA.
	Free water was not present at the edge of the piles.
❒	Spreading was even (one pass for each course).
❒	Strike-off was uniform and at the proper elevation for mesh, and it was high enough to leave a proper amount for finishing.
❒	Concrete was vibrated or spaded along the forms and at the joints. (Surplus mortar showing or splashing indicates excessive vibration.)

Table B-1. Sample Checklist (continued)

❒	Mesh was placed correctly without tamping.
❒	Tie bars were properly placed (pressed into the concrete or for welded wire fabric, laid on the surface that was struck off).
	Finishing
❒	Concrete in front of screeds was rolling, not sliding. (If it is not rolling, check the air entrainment and the slump.)
❒	First screed on the first pass carried a uniform roll of concrete, 6 to 8 inches in diameter, and left the concrete surface slightly high.
❒	Second screed on the first pass carried a uniform roll of concrete, 2 to 3 inches in diameter, and cut the concrete slightly above the top of the form, with a small allowance for initial settlement.
❒	Screeds were lifted at joints when dowels were used.
❒	Surface was smooth and tight with ripple marks after the transverse finishing machine passed. (Two passes may be required, and tearing can usually be eliminated by increasing the speed of transverse motion in relation to the forward speed.)
❒	Forward screed was tilted slightly to provide compaction and surge. (Stiff mixes require greater tilt than mixes with more slump. The rear screed should never be tilted. If the finishing machine backs up for an additional pass, continue the forward motion while the screed is raised. Thus, concrete in front of the screeds is spread rather than left standing in a pile.)
❒	Removable strips for forming a dummy groove were placed ahead of the longitudinal finishing machine in a true line and perpendicular to the forms.
❒	Longitudinal finishing machine was held back as far as possible and permitted finishing operations to be completed while the concrete was still plastic.
❒	Bull float carried a small roll of concrete (1/2 to 1 inch in diameter) at its forward end, and the roll tapered to nothing about 18 inches from the rear end.
❒	Bull float did not cut the concrete. (If it does, check the transverse finishing machine and the forms' surfacing and stability, assuming that the longitudinal finishing machine is properly adjusted.)
❒	Surface after bull-floating was tight and smooth at the final elevation and had only a faint diagonal marking. (If a formed centerline joint is used in full-width paving, cut it and place strips from a centerline machine immediately after bull-floating.)
❒	Faint diagonal markings were removed with hand-operated, 12-foot straightedges; and accumulated fine material and water were removed by pulling the straightedges from the center to the forms.
❒	Minor discrepancies in elevation were corrected with straightedges. (If this is required continuously, the equipment and/or the forms are out of adjustment.)
❒	Small holes in the surface were closed up. (The use of short, smoothing lutes or floats is not permitted as a constant part of finishing operations.)
❒	Pavement surface did not have more than 1/8 inch of mortar over the CA nearest the surface.
❒	Water was not sprinkled on the surface during finishing operations.
❒	Longitudinal joints along the forms were edged to the proper radius.
❒	Burlap drag or another texture was applied when the surface was barely stiff enough to hold the texture. (The burlap should be wet, clean, and unfrayed; and it should be dragged evenly so that texture marks are uniform and parallel to the centerline. When the burlap drag is not in use, it should be raised from the concrete.)

Table B-1. Sample Checklist (continued)

	Sawed Joints
❒	Joint location was marked with a pin or a stake beside the form, and a string line was snapped across the fresh concrete.
❒	Impressed material (paper, plastic, asphalt, or cork board) was placed following the longitudinal float and positioned to be square and straight across the pavement and perpendicular to the surface.
❒	Vibrating bar (to move large aggregate from the line of the saw cut) was inserted in the concrete to the depth of the saw cut and withdrawn before overvibration occurred in the concrete.
❒	Sawing was done before the concrete cracked but late enough that raveling was within allowable tolerances.
❒	Saw cut was straight and perpendicular to the edge of the pavement.
❒	Depth of the saw cut was checked.
❒	Saw cut went through the pavement edge at full depth.
❒	Saw cut removed impressed material.
❒	Curing cover was placed immediately.
❒	Membrane cut was filled with rope or other removable material, not with sand or similar loose material.
	Formed Joints
❒	Joints were cut open (following straightedging or earlier, depending on conditions) along the forming strip or small cap, the strip was raised to the pavement surface and trued with a string line, and the plastic concrete was floated against the strip.
❒	Joint strips were raised after the burlap drag. Care was taken not to disturb the concrete, and caps over plates were removed.
❒	Joint strips or plates were used as edging guides.
❒	Joints were edged and finished when the concrete was stiff enough to hold a vertical face but before it was so stiff that mortar was added to fill irregularities during edging. No concrete was permitted over a joint plate.
❒	Joint slot was cut clean and through to the forms.
❒	Surface across joints was checked with a straightedge that was at least 4 feet long.
❒	Surface texture was brought to the edge of joints.
❒	Loose mortar was cleaned from the joints.
❒	Plates on formed centerline joints were removed and edging was completed as transverse joints were finished. If impressed premolded or ribbon joint fillers were used, no mortar remained over the joint material.
	Final Surface Check and Finish
❒	A second burlap drag was used over the entire pavement after joints were completed.
❒	Entire surface was checked with a light, 10-foot straightedge.
	Curing
❒	The curing process was started as soon as possible without marring the surface of the concrete.
❒	Burlap was clean and wet when placed and wetted again after placement.
❒	Paper rolls were supported above the soft pavement while they were being unrolled.
❒	Water was misted immediately ahead of paper or polyethylene sheets when used for curing on hot, dry, windy days.
❒	Wet burlap used for curing was not allowed to dry out but was kept wet for the specified period.

Table B-1. Sample Checklist (continued)

❒	Curing was placed before joint finishing was complete on hot days. Curing was not placed over the joint, and short sections were uncovered to finish the joints.
❒	Pavement had a wet surface when final curing was placed after initial burlap curing.
❒	Membrane curing compounds were agitated in the container during application. The amount and uniformity of coverage was checked for compliance with specifications.
❒	Curing material uniformly covered the top and sides of the slab at the specified thickness.
Form Removal and Care of Pavement	
❒	Forms were removed in such a manner that they were not twisted or bent. Pavement edges were protected from damage.
❒	Honeycombing on the side of the slab was immediately filled with mortar. (Excessive honeycombing indicates incorrect vibration or spading during placement of the concrete or it indicates an incorrect mix.)
❒	Curing was brought down over the side of the pavement.
❒	Curing was carefully maintained during the required period.
❒	Curing material was removed carefully, inspected, and prepared for reuse. Damaged paper or polyethylene curing material was removed from the job.
❒	Sawing of centerline joints was done after the curing material was removed.
❒	Joints were thoroughly cleaned and sealed as soon as possible after the curing period and before traffic used the pavement.
❒	Joints were clean and dry when sealing material was placed.
❒	Sealing material filled the joint completely but did not overflow or extend onto the pavement.
❒	Temporary or permanent shoulder material was placed adjacent to the slab before traffic used the pavement.
Dividing the Work	
❒	One man inspected all the work ahead of the mixer, including placement of tie bars and joint assemblies.
❒	A second man inspected the condition and alignment of the forms, the correctness of the tie bar and joint assemblies immediately ahead of concreting, and all the work from there back to the joint crew. (This man is generally responsible for the entire paving operation.)
❒	A third man inspected all the work beginning with the curing crew and including the rest of the operation.
Equipment Inspection	
❒	All equipment was maintained in good working order. (Frequent breakdowns require a shutdown until the equipment is repaired and ready for use.)
❒	Subgrader and fine-grade planer were checked and adjusted as required to produce a true fine grade with minimal hand work.
❒	Subgrade template or scratch board was adjusted accurately to true fine-grade cross section and was checked every morning.
❒	The mixer was timed, and a locking device was arranged to control the mixing time. (This should be checked several times daily. The number of drum revolutions per minute should be checked at least daily. Water discharge and air-entraining admixture discharge must be calibrated daily for leakage. Air-entraining admixture dispenser and discharge line must be checked frequently for clogging.)

Table B-1. Sample Checklist (continued)

❒	All spreading, strike-off, and finishing equipment was examined for excessive wear and accurately set and adjusted before work began. (The manufacturer's recommendations should be followed. Screeds on the finishing machine should be checked daily for proper crown. Remember that the final surface quality results from the cumulative effects of all the finishing equipment; therefore, all pieces must be adjusted to one another. If considerable care is exercised originally in adjusting the longitudinal float accurately to line and grade, the performance of this machine can be used as a reference for final adjustment of the strike-off and finishing screeds.)
	Control Tests
❒	Slump tests were made at least three times daily, and additional tests were made as often as needed to maintain uniform consistency.
❒	Air-entrainment tests were made at least three times daily with a minimum of three readings per test. Additional tests were made when visual inspection indicated a change in the amount of air entrainment.
❒	Unit-weight and yield tests were made in connection with air-entrainment tests at least once a day, and additional tests were made often as the amount of air entrainment changed.
❒	Test beams and cylinders were cast as required by the specifications. (Beams and cylinders should be made by inspectors, not laborers, using approved procedures. Curing of specimens should start promptly and be carefully continued as required. Specimens should be molded at a location where they will not be disturbed until after the final set, and they should be handled carefully at all times. Particular care is required to ensure that no beam faces dry out and that the beams are fully supported during the early period of aging.)

Glossary

AC	asphalt cement
AFJMAN	Air Force joint manual
AFJPAM	Air Force joint pamphlet
agg	aggregate
AP	asphalt petroleum
Apr	April
APSB	asphaltic penetrative soil binder
ATTN	attention
avg	average
C	Centigrade
CA	coarse aggregate
$CaCl_2$	calcium chloride
cc	cubic centimeter(s)
CF	cubic foot, cubic feet
co	company
corp	corporation
cu	cubic

CY	cubic yard(s)
CZ	combat zone
DA	Department of the Army
DC	District of Columbia
DD	Department of Defense
Dec	December
DM	design manual
EIC	end item code
F	Fahrenheit
FA	fine aggregate
FM	field manual
FRBS	fine river-bar sand
FSN	federal stock number
ft	foot, feet
gal	gallon(s)
GPH	gallons per hour
GPM	gallons per minute
gr	gravity
HQ	headquarters
Hz	hertz
in	inch(es)

inc	incorporated
JMF	job-mix formula
kW	kilowatt(s)
lb	pound(s)
LL	liquid limit
LSD	limestone dust
MC	medium curing
MO	maintenance and operations
MOS	military occupational specialty
mph	miles per hour
MS	medium setting
MSR	main supply route
mtd	mounted
NaCl	sodium chloride
NAVFAC	Naval Facilities Engineering Command
No.	number
Nov	November
NSN	national stock number
NY	New York
OBC	optimum bitumen content
PFC	private first class

PI	plastic index
PL	plastic limit
psi	pounds per square inch
RC	rapid curing
RS	rapid setting
RT	road tar
RTCB	road-tar cutback
SC	slow curing
SGT	sergeant
sp	specific
SP4	specialist four
sq	square
SS	slow setting
SSG	staff sergeant
TM	technical manual
TO	theater of operations
TOE	table of organization and equipment
TRADOC	United States Army Training and Doctrine Command
US	United States
USAPA	United States Army Publishing Agency
USCS	Unified Soil Classification System

V	volt(s)
vol	volume
yd	yard(s)

Bibliography

DA Form 2028. *Recommended Changes to Publications and Blank Forms.* 1 February 1974.

DD Form 1207. *Grain-Size Distribution Graph—Aggregate Gradation Chart.* December 1999.

DD Form 1217. *Bituminous Mix Design—Aggregate Blending.* December 1965.

DD Form 1218. *Marshall Method—Computation of Properties of Asphalt Mixtures.* December 1965.

DD Form 1219. *Bituminous Mix Curves.* December 1965.

FM 5-410. *Military Soils Engineering.* 23 December 1992.

FM 5-428. *Concrete and Masonry.* 18 June 1998.

FM 5-430-00-1. *Planning and Design of Roads, Airfields, and Heliports in the Theater of Operations—Road Design {AFJPAM 32-8013, Vol I}.* 26 August 1994.

FM 5-430-00-2. *Planning and Design of Roads, Airfields, and Heliports in the Theater of Operations—Airfield and Heliport Design {AFJPAM 32-8013, Vol II}.* 29 September 1994.

FM 5-434. *Earthmoving Operations.* To be published within 6 months.

FM 5-472. *Materials Testing {NAVFAC MO 330, AFJMAN 32-1221(1)}.* To be published within 6 months.

TM 5-332. *Pits and Quarries.* 15 December 1967.

TM 5-624. *Maintenance and Repair of Surface Areas {NAVFAC DM MO-102; AFJMAN 32-1040}.* 27 October 1995.

TM 5-3895-219-10. *Operator's Manual for Mixer, Concrete, Trailer Mtd: Gasoline Driven, 16 cu ft (Construction Machinery Model 16SM), Water-Cooled (NSN 3895-00-807-7985) and Air-Cooled (3895-00-985-5335).* 11 June 1963.

TM 5-3895-221-15. *Operator, Organizational, Direct Support, General Support, and Depot Maintenance Manual: Mixer, Concrete, Trailer Mounted: Gasoline Driven, 16 cu ft (Chain Belt Model HBG) (FSN 3895-835-4512) {TO 36C14-3-12-11}.* 30 August 1962.

TM 5-3895-330-10. *Operator's Manual for Spreader, Aggregate, Towed: Force Feed, Pneumatic Tires; 8 ft Width (Burch Corp, Model FF-8) (FSN 3895-130-3633).* 17 May 1971.

TM 5-3895-364-14. *Unit, Direct Support and General Support Maintenance Manual for Kettle, Heating, Bitumen, Trailer Mounted, Model TPS-165A (NSN 3895-01-207-6347) Chausse Manufacturing Co., Inc.* 25 March 1991.

TM 5-3895-371-10. *Operator's Manual for Bituminous Distributor Body, M918 (Model D-63) (NSN 3895-01-028-4390).* 5 October 1979.

TM 5-3895-373-10. *Operator's Manual for Paving Machine, Bituminous Material; Crawler Mounted, Diesel Engine Driven (NSN 3895-01-379-1102) End Item Code (EIC): E47 Ingersoll-Rand Company Model 78OT Contract Number DAAE07-93-0501*. 1 February 1996.

TM 5-3895-374-10. *Operator's Manual for M081 Asphalt Mixing Plant (NSN 3895-01-369-2551)*. 30 June 1994.

Index

A

AC. *See* asphalt cement.
accelerators, 8-6
admixtures, 8-5
aggregate
    blending, 2-10
    gradations, 1-5
    selecting, 2-5
aggregate, in concrete, 8-3
aggregate, types of, 1-5
    coarse, 1-5
    fine, 1-5
    mineral filler, 1-5
air-entrained concrete, 9-2
air-entraining agents, 8-6
army tracks, 14-3
asphalt cement (AC), 1-1, 1-2, 2-1
asphalt cutback, 5-1
asphalt, special mixes, 4-40

B

bamboo mats, 14-4
bitumen
    asphalt, 1-2
    selecting, 2-1
    tar, 1-2
    uses, 2-4
bleeding, 7-5
burlap-drag finishing, 13-8
burned areas, 7-5

C

chespaling mats, 14-4
cold-laid bituminous plant mix, 4-25
cold-weather construction, 13-11
compactors, 3-10
concrete patches, 13-23
concrete, maintaining and repairing, 13-21
concrete-paving procedures, 13-3
construction joints, 12-4
contraction joints, 12-5, 13-9
corduroy roads, 14-12
corrugation, 7-4
cracking, 7-4
craters, 7-11
cross-country tracks, 14-3
cutbacks, 1-3, 2-1

D

deficiencies at plant, 4-24
density check, 2-23
density test, 4-33
distributors, asphalt, 3-6, 3-8
dowels, 12-5

E

emulsions, 1-3, 2-5
equipment, concrete, 11-1
expansion joints, 12-4, 12-7
expedient
    materials, 14-2
    operations, 14-1

F

failure
    causes, 7-2
    types, 7-3
finisher, asphalt, 3-8, 4-29
flexural strength, 10-1, 13-11
forms, concrete, 12-1

H

hand-formed joints, 12-8
handling equipment, 3-5
hardened concrete, 9-1
hasty expedient roads, 14-3
hauling requirements, 13-2
heavy expedient roads, 14-3, 14-9
hot mix
    laying procedures, 4-26
    placing and spreading, 4-28
    placing temperature, 4-27
    rejection, 4-27
hot-mix bituminous concrete, 4-23
hot-weather construction, 13-17

I

imperfections, finished pavement, 4-25

J

job-mix formula, 2-22
joints
    concrete, 12-4
    sealing, 12-9

L

longitudinal joints, 4-36, 12-7

M

maintenance, 7-1
maintenance inspections, 7-2
Marshall test, 2-18
mat problems, 4-34
mat roads, 14-10
material estimates, 6-1
material measurements
    aggregate, 13-2
    cement, 13-1
    water, 13-1
materials, handling and storing, 8-7
metric conversions, A-1
mix design, 10-1
    book method, 10-4
    trial-batch method, 10-7
mix gradation, 2-5
mix methods
    blade, 4-21
    travel plant, 4-20
mixer, drum, 3-4
mix-percentage check, 2-23
Monkton pack, 14-7

O

OBC. *See* optimum bitumen content.
optimum bitumen content (OBC), 2-18

P

patches, 7-5
patching mixes, 7-6
pavement, bituminous, 4-1, 4-23
paving checklist, B-1
penetration macadam
    material estimates, 6-3

pavement, 4-10
penetration patches, 7-9
pioneer roads, 14-16
plank roads, 14-11
plant mix
material estimates, 6-5
pavement, 4-22
plants
asphalt, 3-1
batch, 3-1
continuous mix, 3-1
plastic concrete, 9-1
plasticizers, 8-6
portland cement, 8-2
pothole repair, 7-7
potholes, 7-3
prestressed concrete, 13-20
prime coats, 4-3
prime-coat material estimates, 6-1

R

reinforced concrete, 13-18
repair material, 7-1
repairs, expedient, 14-17
retardants, 8-6
road mix
material estimates, 6-5
pavement, 4-16
rolling the mix, 4-31
rutting, 7-4

S

samples, 4-34
sawed joints, 12-9
seal coats, 7-10
settlements, 7-5
shoving, 7-4
skin patches, 7-10
Sommerfeld track, 14-6
spreaders
aggregate, 3-14
concrete, 13-7
straightedge finishing, 13-8
surface finishing, concrete, 13-7
surface treatment
material estimates, 6-2
mileage requirements, 6-6
multiple, 4-9
single, 4-6

T

tack coats, 4-5
tack-coat material estimates, 6-2
transverse joints, 4-38, 12-7
trial mixes, 10-4

W

water, in concrete, 8-3
welded-wire fabric, 13-18
wire-mesh surfaces, 14-7

FM 5-436
28 April 2000

By Order of the Secretary of the Army:

ERIC K. SHINSEKI
General, United States Army
Chief of Staff

Official:

JOEL B. HUDSON
Administrative Assistant to the
Secretary of the Army
0007301

DISTRIBUTION:

Active Army, Army National Guard, and US Army Reserve: To be distributed in accordance with the initial distribution number 115798, requirements for FM 5-436.