FM 5-412

Project Management

HEADQUARTERS,
DEPARTMENT OF THE ARMY

DISTRIBUTION RESTRICTION:
Approved for public release;
distribution is unlimited.

Field Manual
No. 5-412

HEADQUARTERS
DEPARTMENT OF THE ARMY
Washington, DC, 13 June 1994

PROJECT MANAGEMENT

TABLE OF CONTENTS

Preface v

Chapter 1. Mission of Army Engineer Project Management 1-1
Management Theory 1-1
Military Construction Management 1-5
Execution 1-14

Chapter 2. Planning and Scheduling Processes 2-1
Systems Management 2-1
Gantt Chart Method 2-1
Critical Path Method 2-1

Chapter 3. Activity Estimates 3-1
Importance of Detailed Estimates 3-1
The Estimating Process 3-1
Work-Sheet Estimates 3-3
Optimum Lumber Length Calculations 3-3

Chapter 4. Efficient Site Layout 4-1
Principles 4-1
Methods 4-3

Chapter 5. Controlling Functions 5-1
Supervision 5-1
Inspections and Reports 5-3
Supervision of Indigenous Personnel 5-7
Quality Control 5-8

Chapter 6. Earth-Moving Operations 6-1
Equipment 6-1
Site Preparation 6-1
Excavation and Backfill 6-1
Dredging Operations 6-1
Base and Subbase Preparation 6-2
Graphic Aids 6-2
Estimating Tables 6-4

DISTRIBUTION RESTRICTION: Approved for public release; distribution is unlimited.

---

*This publication supersedes FM 5-333, 17 February 1987.

Chapter 7. Paving Operations 7-1
Types 7-1
Equipment 7-1
Asphalt 7-1
Concrete 7-1
Curbs and Walks 7-2
Estimating Tables 7-2
Examples of Table Use 7-2

Chapter 8. Concrete Construction 8-1
Types 8-1
Labor for Forming 8-1
Labor for Reinforced Concrete 8-1
Labor for Mixing Concrete 8-1
Labor for Placing Concrete 8-2
Labor for Finishing Concrete 8-2
Labor for Curing Concrete 8-2
Fine-Grading Process 8-2
Vapor-Barrier Placement 8-2
Expansion Joints 8-2
Cold-Weather Protection 8-2
Estimating Tables 8-2

Chapter 9. Carpentry 9-1
Types 9-1
Rough Carpentry 9-1
Flooring 9-1
Finish Carpentry 9-1
Windows and Doors 9-1
Insulation 9-2
Estimating Tables 9-2
Example of Table Use 9-2

Chapter 10. Masonry 10-1
Types 10-1
Brick and Concrete Block 10-1
Mortar-Bound Rubble 10-1
Ceramic and Quarry Tile 10-1
Structural Tile 10-1
Lath and Plaster 10-1
Estimating Tables 10-2
Example of Table Use 10-2

Chapter 11. Roofing 11-1
Types 11-1
Estimating Tables 11-1
Example of Table Use 11-1

Chapter 12. Electrical Work 12-1
Types 12-1
Electrical Line Work 12-1
Outdoor Lighting 12-1
Underground Power System 12-1

Interior Electrical Rough In 12-1
Interior Electrical Finish and Trim 12-2
Transformers and Substation Equipment 12-2
Estimating Tables 12-2
Example of Table Use 12-2

Chapter 13. Plumbing 13-1
Types 13-1
Pipe 13-1
Valves and Fittings 13-1
Fire Hydrants, Post Indicator Valves, and Thrust Blocks 13-1
Rough In Plumbing 13-1
Finish Plumbing 13-2
Estimating Tables 13-2
Example of Table Use 13-2

Chapter 14. Equipment Installation 14-1
Types 14-1
Unloading 14-1
Cleaning and Assembling 14-1
Positioning and Aligning 14-1
Supporting and Anchoring 14-1
Connecting Equipment 14-2
Estimating Tables 14-2

Chapter 15. Metal Work 15-1
Types 15-1
Erection of Structural and Miscellaneous Steel 15-1
Sheet Metal 15-1
Installation of Fencing 15-1
Estimating Tables 15-1

Chapter 16. Waterfront Construction 16-1
Types 16-1
Equipment Selection 16-1
Pile-Driving Work 16-1
Pile-Bracing Installation 16-1
Pile-Capping Work 16-1
Sheet-Piling Installation 16-1
Pier-Framing Installation 16-2
Deck Hardware Installation 16-2
Pile Extraction 16-2
Estimating Tables 16-2
Example of Table Use 16-2

Chapter 17. Other Estimating Requirements 17-1
Wrecking and Salvage 17-1
Removing Snow 17-1

Appendix A. Work-Element Checklist A-1
Building A-1
Outside Utilities A-2

Plant Operations A-2
Roads, Paving and Walks A-3
Waterfront Construction A-3

Appendix B. Resource Constraining B-1
Procedures B-1
Sample Problem B-5
Use of Computers B-8

Appendix C. Conversion Factors C-1

Appendix D. Typical Plant Layouts D-1

Appendix E. Equipment and Tool Checklist E-1
Concrete Work E-1
Masonry E-1
Reinforcing Bars E-2
Plaster E-2
Paint E-2

Appendix F. Consumption Factors for Expendable Supplies F-1

Glossary Glossary-1

References References-1

PREFACE

Field Manual (FM) 5-412 is intended for use as a training guide and reference text for engineer personnel responsible for planning, scheduling, and controlling construction projects in the theater of operations (TO). It provides planning and management techniques to be applied when planning and scheduling a construction project. This manual also provides techniques and procedures for estimating material, equipment, personnel, and time requirements for project completion.

The proponent of this publication is the United States Army Engineer School (USAES). Send comments and recommendations on Department of the Army (DA) Form 2028 (Recommended Changes to Publications and Blank Forms) directly to Commandant, US Army Engineer School, ATTN: ATSE-T-PD-P, Fort Leonard Wood, MO 65473-6650.

Unless this publication states otherwise, masculine nouns and pronouns do not refer exclusively to men.

MISSION OF ARMY ENGINEER PROJECT MANAGEMENT

CHAPTER 1

MANAGEMENT THEORY

Management definitions are as varied as the authors who write books about the subject. A good definition states that management is "the process of getting things done through people." Project management may be defined more specifically as "the process of coordinating the skill and labor of personnel using machines and materials to form the materials into a desired structure. "Project construction operations include planning, designing facilities, procuring materials and equipment, and supervising construction. An important Army management principle states that "continual improvement in systems, methods, and use of resources is required for continuous effectiveness in operations." In most large nontactical Army organizations, management engineering staffs help commanders and line operators design new ways to work faster, cheaper, and better.

PRINCIPLES DERIVED FROM EXPERIENCE

Management principles have been developed from experience and serve as a basis for managing human and material resources. They do not furnish definite formulas or solutions to all management problems, nor are they infallible laws; they are only guidelines for action. Effective management should encompass--

- Clearly defined policies understood by those who are to carry them out.
- Subdivision of work, systematically planned and programmed.
- Specific assignment of tasks and an assurance that subordinates clearly understand the tasks.
- Adequate allocation of resources.
- Delegation of authority equal to the level of responsibility.
- Clear authority relationships.
- Unity of command and purpose throughout an organization.
- Effective and qualified leadership at each echelon.
- Continuous accountability for use of resources and production results.
- Effective coordination of all individual and group efforts.

DIFFERENCES FROM CIVILIAN PRACTICES

In a TO, construction, repair, rehabilitation, and maintenance of facilities differ considerably from civilian practices. Although the engineering principles involved are unchanged, in combat area operations the factors of time, personnel, materials, and enemy action impose a great range of problems. This requires modification of construction methods and concentration of effort. Engineers in a TO nor really do not build permanent facilities.

The variety of construction in the military, often done on an expedited or "crash" basis, creates challenging management problems.

In fact, each project is unique in its location, weather conditions, climate, soil, and possible enemy action. Standard designs are used, but they must be adapted to each particular site. Construction materials are often less uniform than those used in the manufacturing industries. Management under these conditions involves unusual problems.

THE DECISION-MAKING PROCESS IN PROJECT MANAGEMENT

Make assumptions based on facts. Weather predictions are based on past weather data. Policies for observing national holidays are expected to continue. These are basic facts and forecast data that may affect the future.

The effect of climate on construction operations is so great that the evaluation of this item alone can be as important as all other factors combined. If the planner fails to consider weather, more time may be lost because of bad weather than would be needed to finish all the work in favorable weather. The planner must evaluate each type of work to be done in relation to the weather conditions expected during construction. For example, for road and airfield work, it may be better to do all the clearing and stripping before starting subgrade and subbase operations. This may be done only if it is certain that there will be little or no rain during clearing and stripping, before adequate drainage can be provided. Evaluating weather lets the planner determine how much time to allow for weather delays.

Find and examine alternative courses of action. Construction in a TO requires speed, economy, and flexibility.

Speed. Speed is fundamental to all activities in a TO and is especially important to the engineer. Recognizing the importance of speed, the Corps of Engineers has developed and adopted certain policies and practices to help expedite project construction.

- Standardization. For hospitals, depots, and shelters, standard designs are used in active TOs to save time in design and construction. Standard designs present the simplest method of using standard materials to build acceptable installations. In building, they permit production-line methods in the prefabrication of construction members. They are designed to reduce the variety of materials required, ensure uniformity and standards, simplify procedures, and minimize costs. Standard designs increase the efficiency of working parties that can repeat erection procedures until they become almost mechanical. Standardization of construction is especially important in time of war.

- Simplicity. Construction must be simple during war because of personnel, material, and time shortages. The available labor uses the simplest methods and materials to complete installations in the shortest time.

- Necessities and life expectancy. Military engineering in the TO is concerned with only the bare necessities and temporary facilities. Adequate provisions are made for safety, but they are not as elaborate as in civilian practice. For example, local green timbers are often used to construct wharves or pile-bent bridges, even though marine borers will rapidly destroy the timbers. By the time that happens, the focus of military effort may have changed. Sanitary facilities may consist of nothing more than pit latrines. Using valuable time for anything more permanent is not justified. In short, quality is sacrificed for speed and economy.

  Construction and repairs in a TO contribute to the sustainment and efficiency of field armies. In an active theater, only essential construction work and development of installations and facilities are performed. The quality of construction does not exceed standards established by the theater commander. Modified emergency construction and the use of permanent

materials (tile, stucco, concrete, and steel) are authorized only in the following situations:

- Such work is required by an agreement with the government of the country in which the facilities are to be located. Prior approval of Headquarters, DA is also required.
- Materials nor really used in emergency construction are not available or cannot be made available in time to meet schedules. However, permanent construction materials are available or can be made available in time to meet schedules, at no increase in total cost. When permanent materials are used, the interior and exterior finishes of structures must be in keeping with emergency construction standards. The permanency of any structure should be consistent with miliary needs at the time.

- Phase construction. Construction in various phases provides for the rapid completion and use of parts of buildings or installations before the entire project is completed. Specialized crews or working parties, such as fabricating, foundation, plumbing, and roofing crews, may be organized. Each crew performs a specific task and moves on to the next site. Large building projects, such as hospitals, depots, and permanent cantonment areas, are suitable for this type of construction.

  Another system of phase construction involves the refinement and evolution of an installation. Construction of a depot will serve as an illustration. Initially, storage is provided in structural frame buildings with footings and roof cladding, but without wall cladding. Later, concrete floors and sidings may be provided, and development may progress in phases until the facilities are adequate.

  Both systems are used and have the same objective: to have the using service occupy the first building while the second building is being constructed. Phase construction is usually less efficient, but this is offset by the maximum use of facilities at the earliest possible time.

  Existing facilities. The use of existing facilities contributes greatly to the essential element of speed. The advantages often influence the point of attack in military operations.

Economy. Equipment, personnel, and materials must be used effectively and efficiently, since these resources are limited.

Flexibility. A military construction program must be flexible. The ever-changing situation in military construction requires that construction in all stages be adaptable to new conditions. To meet this requirement, standard plans are a part of the Army Facilities Components System (AFCS) and are found in the four technical manuals (TM) described on the following page. The AFCS provides logistical and engineering data which is organized, coded, and published to assist in planning and executing TO construction. The system determines personnel and material requirements as well as the cost, weight, and volume of materials needed for construction.

The AFCS provides construction planning data for --

- Contingency, base development, construction, and logistical planners by presenting a flexible planning tool for TO construction and construction support missions.
- Construction units for various utilities, structures, facilities, installations, and construction tasks required by the Army and Air Force in support of military missions in a TO.
- Logistical commands and supply agencies in requisitioning, identifying items, costing, and other related supply functions.

The AFCS consists of a series of four DA TMs. They are—

- *TM 5-301, Army Facilities Components System--Planning.* This manual, which is generally used by military planners, contains installation, facility, and prepackaged expendable contingency supply (PECS) summaries. The TM 5-301 series is published in four volumes, each addressing a separate climatic zone. The summaries appearing in the four volumes include cost, shipping weight, volume, and man-hours required for construction.

  - TM 5-301-1 (Temperate) covers geographical areas where mean annual temperatures are between +30° and +70° Fahrenheit (F).

  – TM 5-301-2 (Tropical) covers geographical areas where the mean annual temperatures are higher than +70° F.

  – TM 5-301-3 (Frigid) covers geographical areas where the mean annual temperatures are lower than +30° F.

  – TM 5-301-4 (Desert) covers geographical areas which are arid and without vegetation.

- *TM 5-302, Army Facilities Components System: Design.* This five-volume manual contains site and utility plans for the installation, construction drawings, and construction detail drawings for the facilities. New designs are added and obsolete designs are revised as required to meet the construction needs of the Army. Drawings stamped “Under Revision, Do Not Use” should not be used for construction or planning purposes. However, drawings stamped “Under Revision" may be used for planning purposes.

- *TM 5-303, Army Facilities Components System--Logistic Data and Bills of Materials.* This manual is generally used by planners, builders, and suppliers in identifying items contained in the bills of materials.

- *TM 5-304, Army Facilities Components System User Guide.* This manual explains how to use the system.

Evaluate the alternatives. Various courses of action are compared in terms of personnel, material, equipment, and time. This is often difficult because the typical planning problem is filled with uncertainties and intangible factors.

Select the course of action. Planning is not yet complete just by accomplishing the above steps. Derivative plans must be developed to support the basic plan. This plan should include all aspects of the project involving administration and logistics. These include, but are not limited to, the following:

- Moving onto the jobsite.
- Bringing in supplies and equipment.
- Locating supply, assembly, work, dining, living, and administrative areas.
- Obtaining and using natural resources.
- Performing daily routine chores.
- Providing area security in a tactical environment.
- Planning for inclement weather.
- Providing for adequate construction site drainage.

MILITARY CONSTRUCTION MANAGEMENT

The functions of the military construction manager are universal, although they may differ in details from one activity to another. These functions should not be confused with operating tasks such as accounting, engineering, or procurement. The managerial functions are *planning, organizing, staffing, directing,* and *controlling.* Each of these is aimed toward accomplishing the objective of the unit. To implement these functions, the manager must understand the objectives, plans, and policies of superiors.

THE PLANNING FUNCTION

Planning means laying out something in advance. Planning creates an orderly sequence of events, defines the principles to be followed in carrying them out, and describes the ultimate disposition of the results. It serves the manager by pointing out the things to be done, their sequence, how long each task should take, and who is responsible for what.

Goal. The goal of planning is to minimize resource expenses for a given task. Planning aims at producing an even flow of equipment, materials, and labor and ensuring coordinated effort. Effective planning requires continually checking on events so that the manager can make forecasts and revise plans to maintain the proper course toward the objective.

Much of the manager's job will be characterized by his plans. If the plans are detailed and workable, and if the manager has the authority to undertake them and understands what is expected, he will require little of his superior's time.

In military construction, the planning phase should be divided into two stages: *preliminary planning* and *detailed planning.* These are discussed more fully in Chapter 2.

Preliminary planning gives the engineer unit commander a quick overview of the assigned task and the capacity of the constructing unit to accomplish the tasks. It serves as a guide to the detailed planning which follows. preliminary planning includes a preliminary estimate and procurement of critical items.

Detailed planning provides a schedule for the entire construction project and develops an accurate estimate of the materials, labor, and equipment to do each of the subtasks or activities. It includes detailed estimating, scheduling, procurement, and construction plant layout, as well as a review of drawings and specifications.

Steps. Planning involves selecting objectives, policies, procedures, and programs. The core of the manager's job in planning is making quality decisions based on investigation and analysis rather than on snap judgment.

Establish the objective. The objective provides the key for what to do, where to place emphasis, and how to accomplish the objective.

Engineer construction functions in the TO are the design, construction, repair, rehabilitation, and maintenance of structures. These include roads, bridges, inland waterways, ports, industrial facilities, logistic support facilities, storage and maintenance areas, protective emplacements, hospitals, camps, training areas, housing, administrative space, and utilities. Other functions are the design, construction, and rehabilitation of railroads, airfields, and heliports.

The construction directive. The management process starts with the receipt of a directive which is an order to construct, rehabilitate, or maintain a facility. The directive should include a description of the project with plans and specifications. Regardless of the form of the directive or the amount of detail, the construction directive (Figure 1-1, page 1-6) should discuss items essential for the success of the project.

HEADQUARTERS
10th ENGINEER BRIGADE
FORT LEONARD WOOD, MO 65473

ABCD-EF 1 May 1994

MEMORANDUM FOR Commander, 77th Engineer Battalion, 10th Engineer Brigade

SUBJECT: Construction Directive No. FWM 93002C-11

1. Mission: You will install two culverts per attached plans and specifications.

2. Location: Intersection of Range and Lewis Roads, Fort Leonard Wood, Missouri. See site plan.

3. Time: Construction will begin not later than 1 August 1994.

4. Additional personnel and equipment: An additional scoop loader is available upon request.

5. Priority: A

6. Reports: Submit a complete activities list for the project. Progress reports will be submitted in accordance with brigade SOP.

7. Materials: A two-hour notice is required for pick up of culverts.

8. Special Instructions: No changes are authorized except through brigade S3. The contact officer for the using agency will be MAJ Power, who can be contacted at building 247, telephone 8-7654.

FOR THE COMMANDER:

R. U. FORREST
CPT, EN
Adjutant

Figure 1-1. Sample Construction Directive

These items, along with comments for planning considerations, are as follows:

Mission. The mission will state the exact assignment with all necessary details and may include an implied mission.

Typically, combat battalion (heavy) missions include:

- Construction or rehabilitation of lines of communication (LOC), bridges, forward tactical and cargo airfields, and heliports.
- General construction of buildings, structures, and related facilities.
- Limited reconstruction of railroads, railroad bridges, and ports.
- Limited bituminous paving.
- Minor protective construction.

When supported by attachments of specialized personnel and equipment, engineer combat battalion (heavy) missions include:

- Large-scale bituminous and portland cement paving operations.
- Large-scale quarrying and crushing operations.
- Major railroad and railroad bridge reconstruction.
- Major port rehabilitation.
- Major protective construction.
- Pipeline and storage-tank construction.
- Fixed and tactical bridges.

Corps combat engineer battalion missions include:

- Construction, repair, and maintenance of roads, fords, culverts, landing strips, heliports, command posts, supply installations, buildings, structures, and related facilities.
- Preparation and removal of obstacles, to include minefields.
- Construction and placement of deceptive devices and technical assistance in camouflage operations.
- Site preparation for air defense artillery units.
- Construction of defensive installations.
- Engagement in river-crossing operations, to include assault crossing of troops and construction of tactical rafts and bridges.

Each engineer command, brigade, group, and battalion is authorized a staff to assist the commander. The composition of these staffs and the duties of the staff members vary with the type of organization, its mission, and its echelon of command. Generally, engineer staffs at group or higher echelons perform as planners, designers, advisors, supervisors, inspectors, and coordinators. At battalion level, the staff members are operators, Staff members supervise the implementation of the plans of the higher headquarters. For example, upon receipt of a task directive from brigade, the group staff designs the project, plans and assigns the tasks, and directs the battalions (which are the operating units) to perform the tasks.

For additional information on engineer unit capabilities, see TM 5-304.

Location. This may be a definite location, or the directive may require the manager to select a site in a general area.

A site investigation should be made of the selected site or general area. The manager uses this information to determine how the environment will affect the project. A site investigation should provide answers to the following questions:

- What are the *terrain* features of the proposed site? Is it hilly, flat, wooded, swampy, or desert? How will the terrain features affect the project?
- What are the existing *drainage* characteristics? Is the site well drained? What effort will be needed to keep it drained before, during, and after construction?
- What problems will be involved in *accessibility*? What effort will be required to

permit travel to, from, and within the site?

- What is the type of *soil?* What will the unit need to do to prepare for vehicle traffic and construction? How much additional work will the unit have to do to complete the project?
- What are the *existing facilities* (buildings, roads, or utilities) that the unit could use?
- What are the *natural resources* located near the job site, such as timber, water, aggregate, or borrow materials? How far away are they? How many are there?
- What *weather* conditions are expected for the project's duration?
- What is the *enemy* situation? What are the good and bad points of defending the site? What improvements must be made?

Time. Time determines the start and finish of the project. If the manager is responsible for planning and estimating, he should be the one to estimate project duration.

Extreme accuracy is not required, as precise calculations are delayed until the detailed planning stage. Approximate rates of production, based on the unit's experience, are usually accurate enough. Where this information is unavailable, published rates in civilian or military texts, tempered by the planner's knowledge of existing conditions, are good substitutes.

The quantity takeoff uses available equipment and personnel to calculate the time required for each item. This time will be increased if the soldiers are inexperienced and require on-site training. The total time for the project is the sum of the times of the subtasks less the time when two or more work items will be done concurrently. See Chapter 2 for detailed planning procedures to more accurately predict the overall project time.

Personnel. The manager should already know what personnel are available. This item of the construction directive tells what additional personnel are available, if needed.

Despite the mechanization of modern warfare, battles are still won and territory is still occupied by soldiers. For this reason, highest priorities on personnel go to units in contact with the enemy. In a combat support role, the engineers have the problem of accomplishing construction quickly with limited personnel. Labor conservation is important. Every engineer must function at peak efficiency for long hours. Assignments must be carefully planned and coordinated. Projects must be well organized and supervised. Personnel must be well cared for and carefully allocated.

A unit's personnel must be considered only in terms of "construction strength. " The project manager must use the number of soldiers actually available to work on the job for his calculations. In the current combat heavy battalion table of organization and equipment (TOE 5-115H), only about 50 percent of a full-strength unit is productive in the construction effort. This figure should be used for planning purposes only when more exact data are not available. The project manager must also consider if the project requires large numbers of personnel with particular skills (for example, plumbers or electricians).

The manager should consider the training of the personnel available for the construction effort. A full-strength battalion with many inadequately trained personnel will result in low construction output. The ability and number of supervisors (not included as productive personnel) affects the construction capability of a unit as well. A shortage of competent supervisory personnel will reduce the construction effectiveness of a unit, even though the productive personnel are adequate in number and ability. The project manager may also want to consider contract construction as an option (See Figure 1-2 for issues concerning contract construction.)

Equipment. The manager needs to know what equipment is on hand and what

The primary alternative to troop construction is the use of contractors or host-nation support personnel. While nonmilitary construction is often justified, there are definite advantages to using troop construction.

Advantages of Troop Construction. First, troop construction is economical, since it eliminates the cost of labor and the contractor's profit. Second, tactical considerations frequently create a situation where contractors or host-nation support personnel are unwilling or unable to undertake a project. Third, troop construction is more flexible since there are no contracts to renegotiate for changes in plans, specifications, or required availability date. Finally, peacetime projects serve as excellent training for soldiers.

Advantages of Contract Construction. A contractor may vary the number and skill level of laborers and the amount and type of equipment as a project progresses. Such flexibility is limited when using troop resources. On the basis of unit integrity, the optimum unit and the optimum amount of construction equipment for the project are selected. This method is more desirable than the task-force organization (where labor and equipment are selected to fit the job) because it supports the principles of management. In addition, troop construction equipment is not as specialized as commercial equipment because it must be rugged and flexible enough to meet a variety of combat construction tasks.

Coordination of Contract Construction. When a particular TO requires extensive construction, it may demand the controlled and coordinated use of contractors, as well as the military engineer elements of the Army, Navy, Marine Corps, and Air Force. In some cases, another US military service may control the project being built by contract construction or even by the Army.

The manager must be aware that there are limitations on the use of military labor for peacetime projects. Regulations specify severe penalties for violations of these limitations. Therefore, it is the manager's responsibility to question a construction directive if it appears to violate any of the following limitations:

- Purpose. Use of military personnel for the maintenance, repair, alteration, and new construction of real property is limited to projects that will attain and maintain technical unit proficiency or to projects restricted by security.

- Policy. DA policy prohibits the use of soldiers in competition with civilian labor when it can be avoided. Unless otherwise permitted, lack of funds is not a valid basis for using military personnel on a project.

- Costs. Military labor costs are not included when determining the level to which a project must be submitted for approval. However, travel and per diem for troop labor, plus costs of maintenance and operation of government-owned equipment, will be included. The cost of unfunded military labor and equipment depreciation must be compiled and recorded as part of the total project cost.

- Additions. No new work can be performed in a new facility within one year of its completion unless approved by DA. An example would be adding partitions in an orderly room.

Figure 1-2. Choice of troop or contract construction

additional equipment is available, if needed, to accomplish the mission. He also must determine if the available resources will allow the constructing unit to do the job.

Due to the destructiveness of opposing forces, normal peacetime construction equipment cannot handle the requirements of wartime operations, regardless of the location. The economical use of equipment resources is essential.

The status of a unit's construction equipment, particularly heavy equipment, is an important factor in determining the ability to do a job. The planner must consider the average deadline rates for items of equipment and then judge whether the rates will be maintained, improved, or worsened during a particular job.

Critical Equipment. Depending on the type of job, certain items of equipment will be critical because they will govern the overall progress. For example, earth-moving equipment is critical for road and airfield work. Woodworking sets are essential for wood frame structures.

Distribution. The planner should tentatively assign the critical equipment to the various construction operations. Assignment will depend on the amount of equipment on hand, deadline rates, and quantity and type of work to be done. For example, in assigning dozers and scrapers to cut and fill operations, the quantities of earthwork and the haul distances will determine how many of the available dozers will be assigned to the scrapers and how many will be used for dozing.

Priority. This gives a single priority for the entire project or separate priorities for different stages of a project.

Prioritizing helps to determine how much engineer effort will be devoted to a single task. While detailed priority systems are normally the concern of lower-echelon commands, all levels of command, beginning with the theater commander, will frequently issue directives to serve as guidelines. Priority ratings are usually listed for items as first, second, third, fourth, and so on. If a priority rating contains several items that might be worked on concurrently, these items are numbered consecutively to show their relative standing. For example, a theater Army commander might list the following priorities:

- First priority: Initial beach landing and docking facilities
- Second priority: Hospital facilities
- Third priority: Wharves and docks

NOTE: Details, such as which of the hospital facilities shall be constructed first, are left to the discretion of the local commanders. This conforms to the principle of decentralization, which permits maximum operational freedom to subordinates. The dispersion of forces in a TO requires that engineer authority be decentralized. The engineer in charge of operations at a particular locality must have authority equal to his responsibilities.

Reports. Required reports (for control purposes) should be listed and included in the unit standing operating procedure (SOP).

NOTE: For more information on reporting, see the CONTROLLING FUNCTION section described later in this chapter.

Materials. The construction directive is the authority for requisitioning materials. This item addresses the lead time necessary for procurement, location, and delivery.

During the preliminary planning stage, the planner should keep notes on items that may be critical to the job. These critical items may be readily identified when using the network analysis system (see Chapter 2). Critical items may be materials, equipment, or soldiers with particular skills. Their availability may be important because they are needed immediately for the job, because they are not available locally, or

because a long-lead item for procurement may be required. The manager should study the entire job and the notes and then identify such critical items. The manager can then take action to ensure that the items will be on hand when required.

If necessary, the responsible leadership must organize an overseas wartime construction program to execute the required work in the time allotted and with a minimum of shipped-in tonnage. Local resources must be used, but these are often limited. Engineer battalions normally have no authority for direct, local procurement, so senior engineer headquarters or other military or government organizations must provide materials. This imposes upon the Army the problems of coordination, purchase, and delivery. These materials are normally procured in the United States and may require long-lead times.

Special Instructions. This item gives any additional information concerning the project, including instructions for coordinating with the using agency.

THE ORGANIZING FUNCTION

The organizing function determines the activities required to complete the project, counts and groups these activities, assigns the groups, and delegates authority to complete them. Sometimes all this is called *organization structure.* The organization structure is a tool for accomplishing the project's objectives. It establishes authority relationships and provides for structural coordination. Therefore, organizing is the establishment of the structural relationships by which an enterprise is bound together and the framework in which individual efforts are coordinated.

The power of decision granted to or assumed by the supervisor or manager is authority. When the number of people involved in a project exceeds the span that one person can control, the manager must delegate authority. The delegation of authority is key to effective organization.

An officer making decisions also assumes responsibility and must answer for the results of his decisions. Wherever authority is created, responsibility is created. Although authority may be delegated and divided, responsibility cannot be delegated or divided. No responsible officer can afford to delegate authority without designing a system of control to safeguard the responsibilities.

A manager may delegate the authority to accomplish a service, and a subordinate in turn may delegate a portion of the authority received, but these superiors do not delegate any of their responsibility. No supervisor loses responsibility by assigning a task to another person.

THE STAFFING FUNCTION

Staffing is finding the right person for the job. Although the modern armed forces place much emphasis on the effective use of mechanized equipment, the military effort depends on the training, assigning, and supervising of people who use this equipment. Often the engineers have construction problems due to limited trained personnel. Solutions to these problems require planning and coordination of personnel assignments.

THE DIRECTING FUNCTION

The management function of directing involves guiding and supervising subordinates to improve work methods. Open LOC in organizations are maintained in vertical and horizontal directions. While assignments of tasks make organization possible, directing adds a personal relationship. Directing embraces the practical problems in getting personnel to work as a team to accomplish the unit objective. Basically, it concerns managing human behavior and taking action that will improve performance.

The commander must have a thorough knowledge of the organization's structure, the interrelation of activities and personnel, and the capabilities of the unit. In addition, the military manager must be able to lead the organization to accomplish its mission.

The manager can create the best conditions for superior effort by making certain subordinates understand the unit mission and their particular roles in it. People who "know the reason why" are better motivated. A good leader makes it a point to explain to the troops the reasons for undertaking a particular mission.

The terms *manager* and *leader* are not synonymous. The manager coordinates activity by executing managerial functions and accomplishes missions through people. (See Figure 1-3.)

THE CONTROLLING FUNCTION

Control is a continuing process of adjusting the operation to the situation in order to accomplish the desired objective. The manager must measure and correct activities in order to compel events to conform to plans. For effective control, the manager must be in constant touch with the operations to be sure they are proceeding on course and on schedule. Most of the construction control problem involves processing large volumes of technical information.

The manager must be sure that the plans are clear, complete, and integrated. Then the necessary authority must be given to the person responsible for a task.

Because of the many changes and situations that may arise on different projects, a control system must be broad enough to cope with all possibilities. Regardless of the circumstances, control depends upon the communication of information, both for gathering data and for implementing the desired corrective action. To provide effective control, communication of information must be--

- Timely. In order to be meaningful, the manager must receive and distribute the information used for controlling in a timely manner. Information should be "forward looking." Focus attention on actions that will cause activities to occur as scheduled, instead of adjusting for events in the past.

Leadership is not management. Management is a bottom line focus: How can I best accomplish certain things? Leadership deals with the top line: What are the things I want to accomplish? In the words of both Peter Drucker and Warren Bennis, "Management is doing things right; leadership is doing the right things." Management is efficiency in climbing the ladder of success; leadership determines whether the ladder is leaning against the right wall.

You can quickly grasp the important difference between the two if you envision a group of producers cutting their way through the jungle with machetes. They're the producers, the problem solvers. They're cutting through the undergrowth, clearing it out.

The managers are behind them, sharpening their machetes, writing policy and procedure manuals, holding muscle development programs, bringing in improved technologies and setting up working schedules and compensation programs for machete wielders.

The leader is the one who climbs the tallest tree, surveys the entire situation, and yells, "Wrong jungle!" But how do the busy, efficient producers and managers often respond? "Shut up! We're making progress."

Efficient management without effective leadership is, as one individual has phrased it, "like straightening deck chairs on the Titanic." No management success can compensate for failure in leadership.

Excerpts taken from The 7 Habits of Highly Effective People by Stephen R. Covey, copyright 1989 Simon & Schuster, used with permission of Covey Leadership Center, 1-800-331-7716.

Figure 1-3. Leadership versus management

- Accurate. Pinpoint and then truthfully report the information necessary for control.
- Valid. Information is valid when its content represents a situation as it actually exists. Present this information in appropriate and useful units of measure.
- Routed properly. Make information used in controlling directly available to the person who can take or recommend corrective action, by virtue of both authority to do so and technical knowledge of the project.
- Economical. Collect only the information required for effective control, thus minimizing the personnel, time, and money needed to perform the control function.

The controlling function as part of the entire project management process is shown in Figure 1-4.

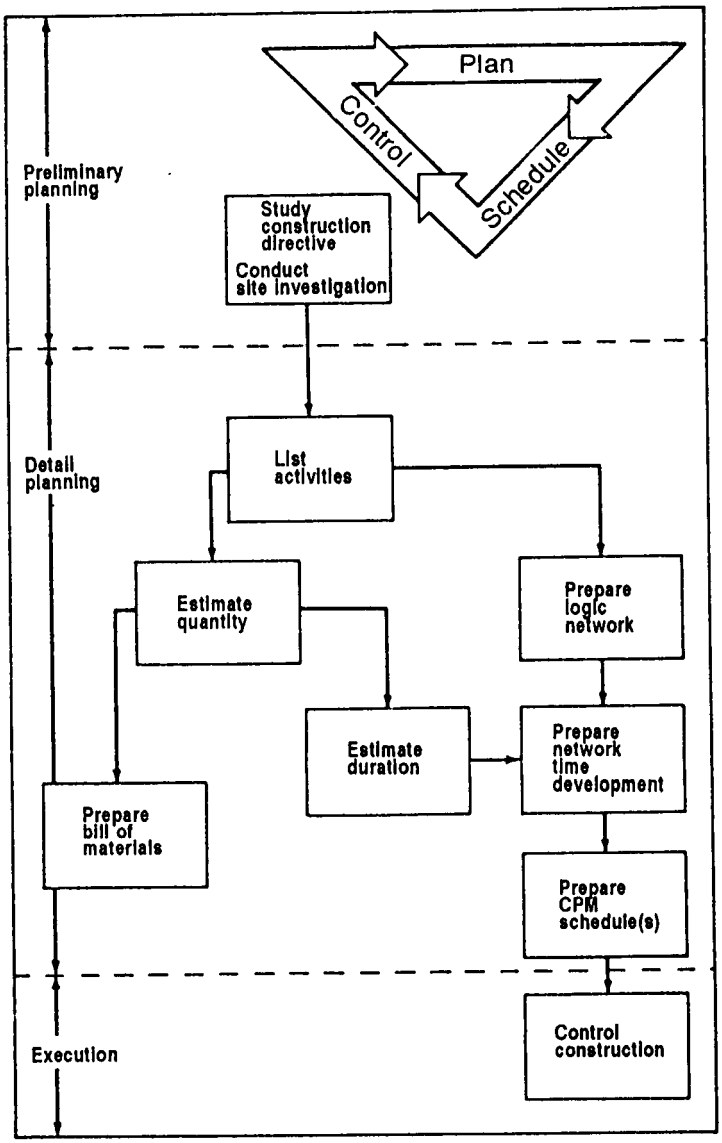

Figure 1-4. Steps of the management process

EXECUTION

The execution phase begins with the actual start of construction, although some procurement actions may already have taken place. To ensure compliance with the schedule and with the project plans and specifications, the engineer unit commander uses supervision, inspections, and progress reports. Any changes in project plans and specifications made after construction has begun involve replanning and rescheduling.

PLANNING AND SCHEDULING PROCESSES

CHAPTER 2

SYSTEMS MANAGEMENT

Engineers must manage engineer tasks, whether the task is a rear-area construction job, such as a supply depot, or a forward-area combat engineer task, such as a minefield. They must use a combination of personnel, materials, and equipment to accomplish the mission. Task completion is affected by available time and resources, the tactical situation, weather, and terrain conditions.

These factors affect both construction planning and combat planning. How well the engineer leader accomplishes a task depends in large part on his ability to plan, schedule, and control resources within a constrained environment. This chapter describes the basic elements of systems that will aid the manager in accomplishing the mission.

GANTT CHART METHOD

An excellent means of project planning and control is the Gantt or bar chart (Figure 2-1, page 2-2). Used primarily for smaller projects, it is simple, concise, and easy to prepare. The major disadvantage of this management tool is that the user must have a detailed knowledge of the particular project and of construction techniques. Problems may occur if the project manager is suddenly replaced. The replacement manager is left with a document in which all the relationships are not readily apparent.

Other disadvantages of planning with a Gantt chart are--

- It does not clearly show the detailed
- sequence of the activities.
- It does not show which activities are critical or potentially critical to the successful, timely completion of the mission.
- It does not show the precise effect of a delay or failure to complete an activity on time.
- In an emergency, a project's delay may lead to incorrectly expediting noncritical activities.

CRITICAL PATH METHOD

PURPOSE

The critical path method (CPM) is a planning and control technique that overcomes the disadvantages of using only a Gantt chart and provides an accurate, timely, and easily understood picture of the project. With this additional information, it is easier to plan, schedule, and control the project. Used together, the Gantt chart and the logic network provide the manager all the critical information needed to accomplish the task.

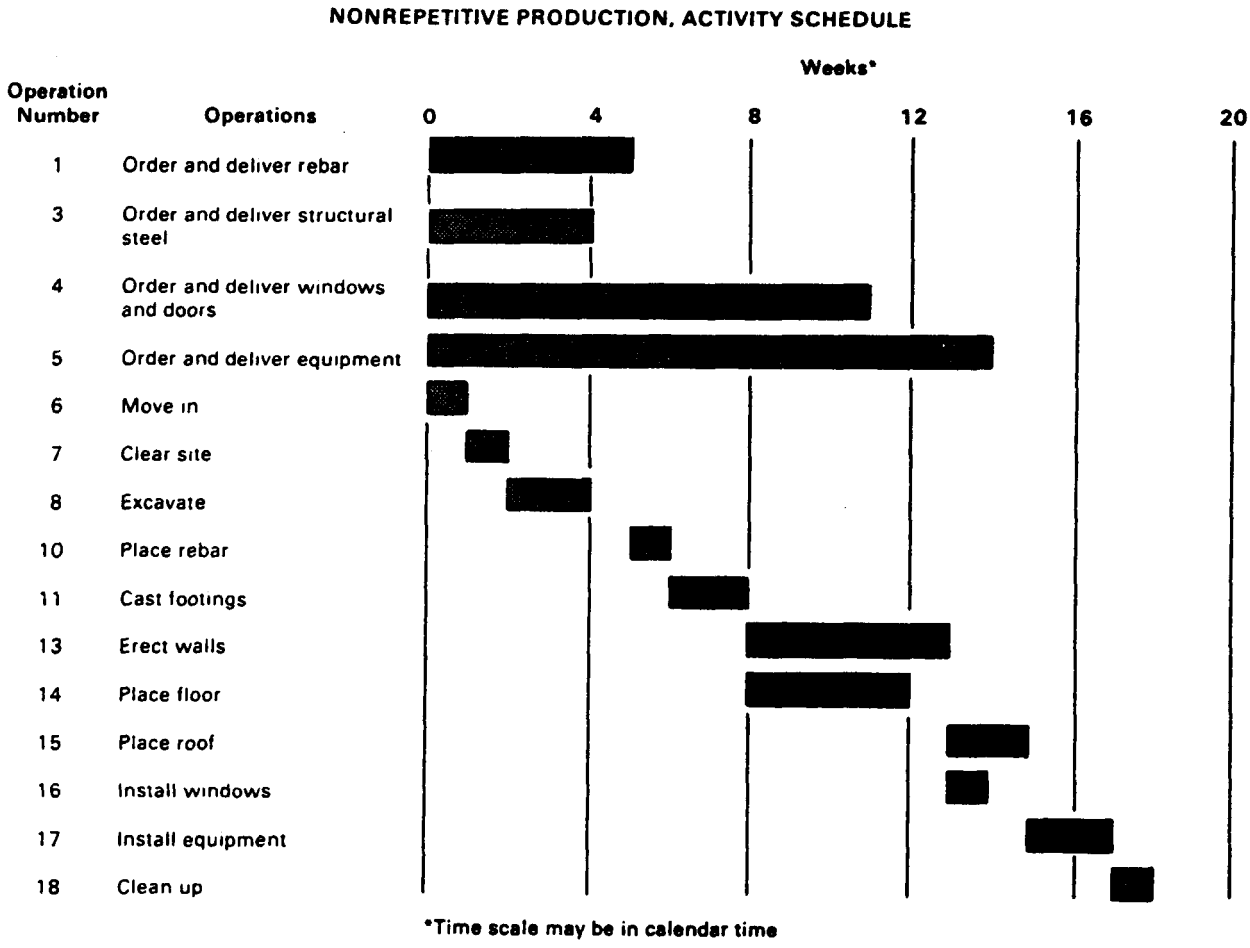

Figure 2-1. Gantt or bar chart

The CPM requires a formal, detailed investigation into all identifiable tasks that make up a project. This means that the manager must visualize the project from start to finish and must estimate time and resource requirements for each task.

Uses. The CPM can be used to accomplish construction and combat tasks at any level of management from the engineer squad to the engineer brigade. A squad leader needs to have a basic knowledge of CPM for two primary reasons.

Engineer tasks. As a member of a larger work element, the squad leader will be responsible for assigned tasks within the CPM network. Knowledge of CPM results in a better understanding of the criticality of the tasks in relation to the total project so that the squad can be better prepared or trained to accomplish these tasks.

Combat tasks. A squad may be attached to a maneuver element if required by the tactical situation. Therefore, the squad leader becomes an independent manager of personnel, material, and equipment and must now plan, schedule, and control these assets. Normally, a formal portrayal of the CPM would not be required, but the basis for CPM becomes a valuable tool for the squad leader in accomplishing his combat tasks.

Advantages. The CPM --

- Reduces the risk of overlooking essential tasks and provides a blueprint for long-range planning and coordination of the project.
- Gives a clear picture of the logical relationships between activities in a project. This is especially helpful if a new manager needs to take over the project.
- Focuses the manager's attention by identifying the critical tasks.
- Generates information about the project so that the manager can make rational and timely decisions if complications develop during the project.
- Enables the manager to easily determine what resources he will need to accomplish the project and when these resources should be made available.
- Allows the manager to quickly determine what additional resources he will need if the project must be completed earlier than originally planned.
- Provides feedback on a finished project that lets the manager improve techniques and assure the best use of resources on future projects.

Limitations. The CPM is not a cure-all for engineer problems. It does not make decisions for the manager, nor can it contribute anything tangible to the actual construction. The CPM should be used to assist the manager in planning, scheduling, and controlling the project.

PRELIMINARY PLANNING

The first step in planning is to find out all the essential information concerning the project. Most of this information can be obtained from the construction directive published by the next higher headquarters for the company or battalion actually performing the construction. If the information is not there, the manager should ask for it. At the platoon and squad levels, tasking is normally accomplished by oral orders. After gathering information, the manager should conduct a thorough site investigation, then check with the customer to ensure that the final facility, as planned, will satisfy the needs. For more information on preliminary planning, see Chapter 1.

DETAILED PLANNING

The manager must study plans and specifications carefully, construct the project mentally, and break it down into its component parts. Each component is termed an *activity:* a resource-consuming element of the overall job which has a definable beginning and ending.

Developing an activities list is the first step in developing a CPM, and the step that most easily frustrates many managers. Breaking down a construction project into activities and placing these activities in a logical sequence requires skill and experience. Once the process of mentally constructing the project has begun, however, the activities can come to mind easily. The CPM planner must consult with the construction supervisor to get the required data, and may gather valuable assistance from experienced noncommissioned officers (NCOs) in planning the project and developing estimates. Appendix A is a checklist containing work elements or tasks for various construction jobs.

The number and detail of the activities on the list will vary from job to job and will depend upon the intended use of the CPM network and the experience of the managers. Use Figures 2-2 through 2-5, page 2-4, for the following example: Someone, somewhere, gets an idea for a project, prepares an activities list, and delegates these activities to subordinates (Figure 2-2).

A. Project: Upgrade all existing on-post secondary roads.

B. Activities list:

1. Upgrade all trails to dirt roads.

2. Upgrade dirt roads to gravel roads.

3. Upgrade gravel roads to paved roads.

C. Delegation: Delegate gravel road upgrade to 999th Engr Bn.

Figure 2-2. Brigade actions

The subordinate unit then prepares an activities list and delegates these activities to its subordinates (Figure 2-3).

A. Activities list:

1. Upgrade route #15

2. Upgrade route #17

3. Upgrade route #22A

4. Upgrade route #30

B. Delegation: Delegate Route #17 roads upgrade to B Co, 999th Engr Bn.

Figure 2-3. Battalion actions

The next subordinate unit then also prepares an activities list and delegates these activities to its subordinates (Figure 2-4).

A. Activities list:

1. Pave route #17.

2. Install traffic signs.

3. Prepare road shoulders.

B. Delegation: Delegate traffic sign installation to 3d Plt, B Co, 999th Engr Bn.

Figure 2-4. Company actions

The next subordinate unit, in turn, prepares an activities list and may or may not delegate further for each activity (Figure 2-5).

Activities list:

1. Acquire signs.

2. Assemble signs.

3. Place signs.

Figure 2-5. Platoon actions

The bottom line, however, is that the higher-echelon levels need not list each and every little possible activity (such as placing traffic signs) when it receives the "big picture" mission. Activities should be only as specific as is consistent with the level of supervision.

Keep in mind that the activities list only states what is to be done. It will not consider how the activities will be accomplished, in what order the activities will be performed, or how long it will take to complete each activity. All that is necessary at this point is to list what work must be done to complete the mission. The other problems will be addressed later, one at a time.

The following guidelines offer some assistance, but should not be regarded as strict rules:

- Break the assigned job into separate operations, or activities, to complete the job successfully. The number and detail of these tasks will vary from job to job.
- Include a description of the work to be performed within each activity.
- Do **not** consider time, labor, order of construction, material, or equipment. Break the project into its component parts only.
- Check the activities list for completeness and accuracy.

LOGIC DIAGRAM

One of the most important features of the CPM is the logic diagram. The logic diagram graphically portrays the relationship between a project's many activities. This benefits the manager by providing a tool to use in eliminating many problems that might arise during the construction phase of the project. Before the diagram can be drawn up, however, the project must first be constructed both mentally and on paper to determine the activities' relationships. The manager does this be asking the following questions for each activity on the activity list

- Can this activity start at the beginning of the project? (Start)
- Which activities must be finished before this one begins? (Precedence)
- Which activities may either start or finish at the same time this one does? (Concurrence)
- Which activities cannot begin until this one is finished? (Succession)
- Which activities may start when a portion of another activity is complete? (Lag/Lead)

One way to determine these relationships is to make one column to the right of the activities list titled "Proceeded Immediately By (PIB)". Under this column, for each activity, list all other activity numbers (or letters or symbols) which must **immediately** precede the activity in question. If the activity can begin at the very beginning of the entire project, write "None."

Example: You are given the mission to build a 40' x 40' x 8" *concrete pad and construct a 12-foot-wide, 1,000-yard-long gravel roadway leading to it. From your mental and paper construction of the project, you might decide that the activities for constructing the roadway are: to clear the roadway, acquire the gravel, prepare the subgrade/ subbase, and lay the gravel. For the pad, your tasks might be: to clear the site, acquire gravel, prepare foundation, prepare forms, place forms, mix and pour concrete, cure concrete, and remove forms. (Obviously, these activities have been simplified to provide clarity for the example. An actual activities list would likely be much more detailed.)*

Assuming that all resources are immediately available (except the gravel which must be acquired), four of the activities (A,B,C, and G listed below) can begin immediately and "None" will be noted in their "PIB" column. Preparation of the pad

foundation (activity D) cannot begin until the pad site has been cleared (activity A), so A will be placed under activity D's "PIB" column. Since both activities F and I require gravel (activity F because gravel is a component of concrete), then their "PIB" columns will list activity C. By continuing in this same manner, the activities list and PIB results that you develop might look like Table 2-1.

Table 2-1. Activities list

Activities List

Symbol	Activity	PIB
A	Clear Pad Site	None
B	Clear Roadway	None
C	Acquire Gravel	None
D	Prepare Pad Foundation	A
E	Prepare Subgrade/subbase	B
F	Lay Gravel Surface	C,E
G	Prepare Forms	None
H	Place Forms	D,G
I	Mix and Pour Concrete	C,H
J	Cure Concrete	I
K	Remove Forms	J

NOTE: Remember to mark only those items that **immediately** precede the activity in question. For example, even though activity B precedes activity F, it does not **immediately** precede it; activity B immediately precedes activity E which in turn immediately precedes activity F.

Now that we have the necessary activity relationships needed to develop the logic diagram, we must determine which format of logic diagraming we are going to use. Whereas the activity-on-the-arrow format of logic diagraming used to be a popular method, the current standard for both military and civilian managers is the activity-on-the-node format, or "precedence diagramming." The two basic logic symbols on the precedence diagram are the *node* and the *precedence arrow*.

Nodes. A node is simply a parallelogram which represents an activity, and each activity on the activities list is represented by a node on the logic diagram. The node is of a standard shape and format, and contains all the necessary information for the activity. It represents a period of time equal to the activity duration. Each node includes the activity's number, duration, required resources, early and late start times, and early and late finish times (Figure 2-6). Required resources information and activity duration times are taken from the Activity Estimate Sheet which is completed during resource estimating (see Chapter 3). Development of activity numbers and start/finish times will be discussed later.

Start and **finish nodes are** normally represented by a circle or oval. These kinds of nodes have no duration and are known as *milestones.* Milestones can also be used at other points in the network to represent a checkpoint, a major accomplishment, or a deliverable result.

Precedence arrows. The precedence arrow (or simply "arrow") shows the order sequence and relationship between activities (such as what activities must precede and may follow another activity). The configura-

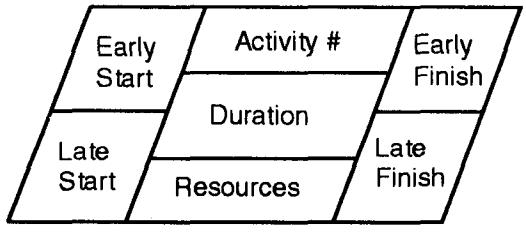

Figure 2-6. Activity-on-the-node format

tion of the diagram's nodes and arrows is the result of the PIB list (or the answers to the five questions that were previously asked of each activity). The logic behind the diagram is such that an activity cannot begin until all activities that send an arrow to it are complete.

Using the previous example, the following is a logic diagram to show the relationship between the project's activities (Figure 2-7). First, all activities that can begin at the start of the project (activities not reliant upon the completion of any other activity before it can begin) will come directly from the START node (activities A, B, C, and G). Since activity D cannot begin until activity A is complete (activity D is "preceded immediately by" only activity A), an arrow will be drawn from activity A to activity D. Since activity H cannot begin until both activities D and G are complete (activity H is "preceded immediately by" D and G), activity H must receive an arrow from both activities D and G. Since neither activity F nor activity I may begin until activity C is complete, an arrow will be drawn from activity C to both activities F and I. If two activities may run concurrently (such as activities F and I), then they will both receive an arrow from a preceding activity yet have no arrows connecting their own nodes, Finally, all activities that do not have a succeeding activity will go directly to the FINISH node (activities F and K).

Development of the actual diagram is often through trial and error. It is best to form a rough draft which satisfies some of the logic criteria, and then modify the diagram to meet the remaining criteria. Begin with those activities which have "None" under the PIB column. They will stem directly from the START node. Then, after each of these starting activities, place the activities which immediately follows it. These follow-on activities are the ones which list the starting activities in the PIB column. Continue using this same methodology until all activities have been diagramed. Finally, connect all the dangling activities to the FINISH node, and check and modify the diagram to ensure none of the logic criteria have been violated.

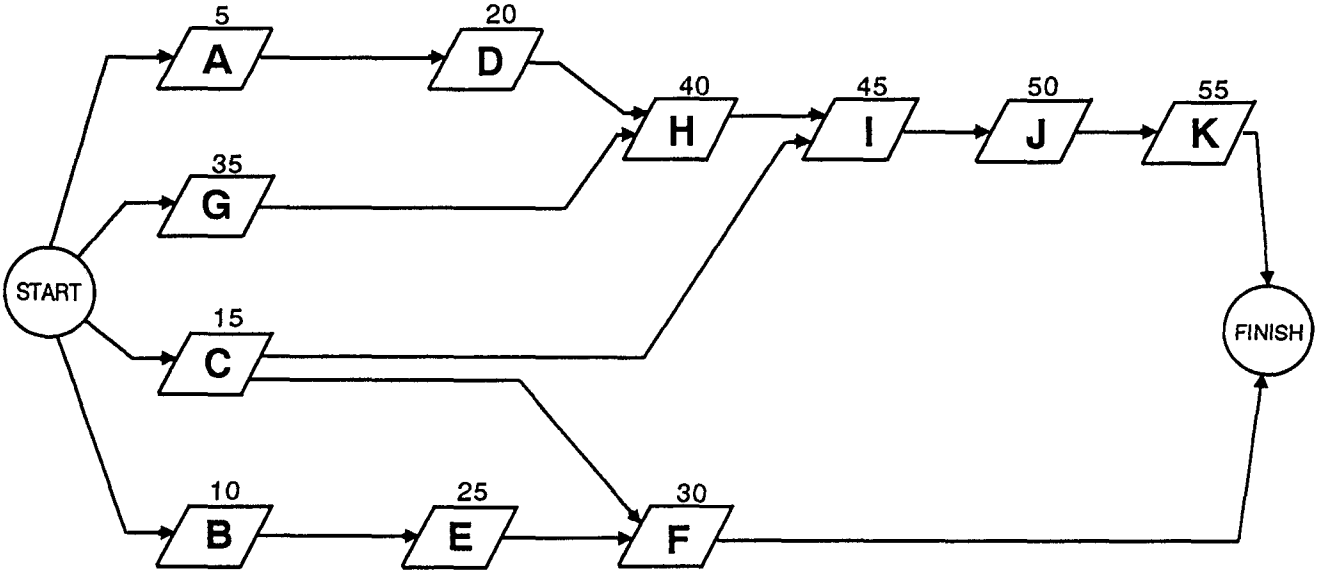

Figure 2-7. The logic diagram

ACTIVITY NODE NUMBERING

Once the logic diagram has been constructed, each activity, or node, is given a number for identification on the diagram. Two rules exist for activity node numbering: 1) every activity node number must be different, and 2) the activity node number at the head of the logic arrow must be greater than the number at the tail of the arrow. Otherwise, any number may be chosen for the activity node number. As you will discover later, numbering the activities reduces confusion on a diagram and is very useful during resource scheduling.

The activity node numbers are placed in the upper middle sector of the node (see Figure 2-6, page 2-6) and normally use increments of five or ten. This allows room for additional activity nodes to be inserted later, if necessary. Once the activities are numbered, they may be referred by either their names or their numbers. In this manual, activity names will frequently be designated by letters, as is shown in Table 2-1, page 2-6, and in Figure 2-7, page 2-7, but the node will receive a number once it has been placed in a logic diagram.

Figure 2-8 shows a circular deadlock and a violation of both diagram logic and numbering rules. The logic error stems from the endless "loop" created by the arrow connecting activity 20 with activity 10. This diagram suggests that 10 is reliant upon 20 which is reliant upon 15 which is reliant upon 10. This illogical diagram also violates numbering rules, since activity 20, at the tail of the arrow, is not less than activity 10, which is at the head. Activity numbering rules help prevent this kind of error, which is difficult to discover in a large network.

ACTIVITY DURATION AND RESOURCES

The logic network is constructed without regard to how long an activity will last or whether all required resources are available. It simply displays the relationships

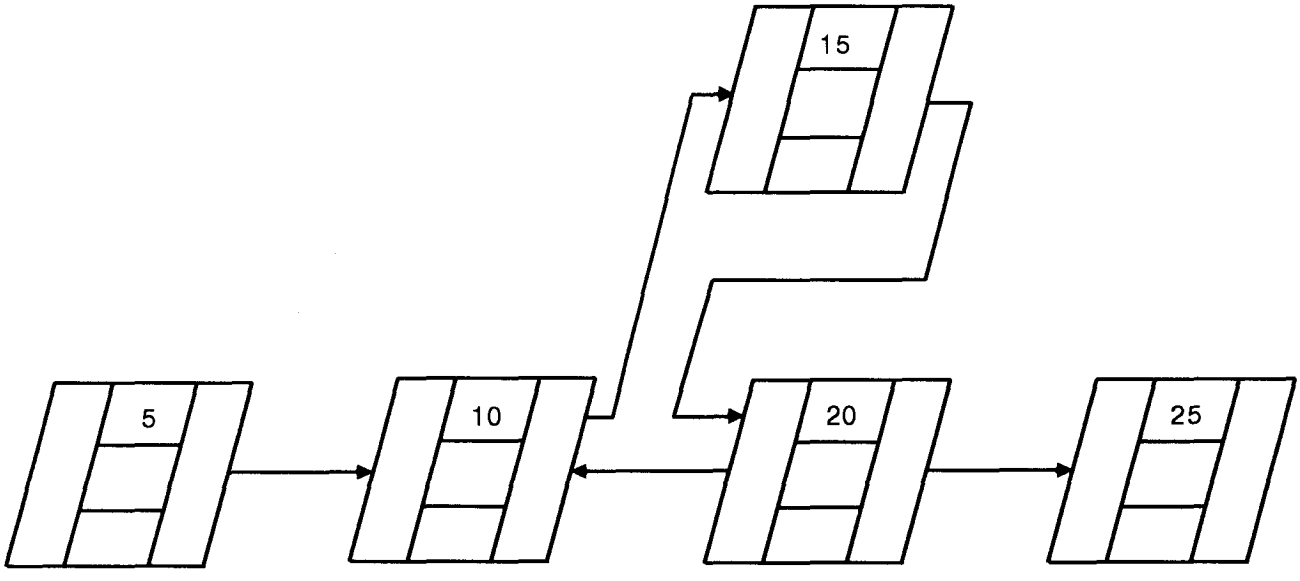

Figure 2-8. Logic error from 20 back to 10

between activities, provides project understanding, and improves communications.

Once the network has been drawn and activity numbers are in place, the manager places activity duration and resource requirements in each activity node. The duration is placed in the center sector of the node, and the resources are placed in the lower middle sector (Figure 2-6, page 2-6). The manager determines these times and resources using the estimating procedure discussed in Chapter 3. This procedure is recommended as a standard because it is flexible and lends itself to full documentation.

If an activity has too many resources to list easily in the space provided in the node, use a code to refer to the necessary resources or list the resources for each activity as shown in Table 2-2.

Estimating is the lifeblood of the CPM time analysis. Estimating data (durations and crew sizes) forms the basis for calculating early and late event times and critical activities, tabulating activity times, and scheduling. Thus, output of CPM time analysis can be no better than the estimating input. If an estimate changes because of new information or experience, the estimator must use the new data to update the time analysis. A time analysis based on outdated estimates is useless.

ACTIVITY START AND FINISH TIMES

The next step in the CPM process is to calculate the earliest and latest times at which the activities can occur without violating the network logic or increasing the project's overall duration. This provides the manager with a time frame for each activity. Within each time frame the activity must be completed or else other activities become delayed or the entire project is delayed. From this exercise, the manager will be able to easily identify which tasks must be critically managed to ensure the project's duration is minimized. Naturally, an event cannot begin until all events previous to it (arrows leading to it in the logic diagram) are completed. The event-time numbers shown in the corners of activity nodes represent the **end** of the time period. Thus, a start or finish time of day five would mean the end of the fifth day (or the beginning of the sixth day).

Table 2-2 activities list shows not only the PIB, but also the new node numbers (replacing activity letters), the duration of each activity (in days), and the estimated resources (from tables and personal experience; see Chapter 3).

Table 2-2. Activities list with resources

Activities List

Number	Activity	PIB	Duration	Resources
5	Clear pad site	None	1	1 dozer, 1 squad
10	Clear roadway	None	2	2 dozers, 2 squads
15	Acquire gravel	None	6	2 5-ton dump trucks, 1 scoop loader,1 squad
20	Prepare pad foundation	5	2	2 squads
25	Prepare subgrade/subbase	10	3	1 dozer, 1 sheepsfoot
30	Lay gravel surface	15, 25	2	1 dozer, 2 5-ton dump
35	Prepare forms	None	1	1 squad trucks, 1 scoop loader, 1 squad
40	Place forms	20, 35	1	2 squads
45	Mix and pour concrete	15, 40	1	3 squads
50	Cure concrete	45	6	1 squad
55	Remove forms	50	1	1 squad

The manager is now able to fill in the information in all three center squares of his activity nodes: the node number (increments of 5 or 10, in increasing order), duration (usually defined to be in hours, days, or weeks), and resources needed. (See Figure 2-6, page 2-6).

Early start /early finish. The *early start times* are positioned in the upper left corner of the activity nodes. These are the earliest times the activity events may start logically. Since the beginning activities (in the above example, activities 5, 10, 15, and 35) are at the start of the project, the earliest time that these events may start is zero (the end of day zero or the beginning of day one). Add the duration of each activity (center of the node) to the early start time to compute the *early finish time,* positioned in the upper right corner of the activity node (Figure 2-9). The early finish time is the earliest time the activity event may finish, if indeed the duration estimate is accurate.

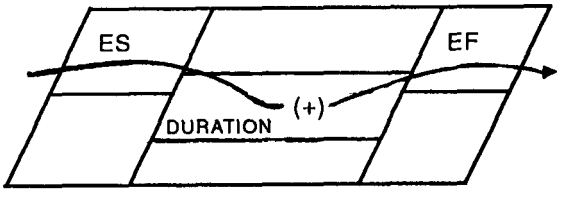

EARLY START (ES) + DURATION = EARLY FINISH (EF)

Figure 2-9. Early finish time

Following the precedence arrows within the logic diagram, the next activity's early start time (at the head of an arrow) is the same as the previous activity's early finish time (at the tail of an arrow). Do not regard the node's bottom left and right corners at this time. To determine an activity's early start time when more than one arrow head leads into its node, choose the **largest** early finish time of all activities at the arrows' tails (Figure 2- 10). Logically, an activity cannot begin until **all** preceding activities are complete.

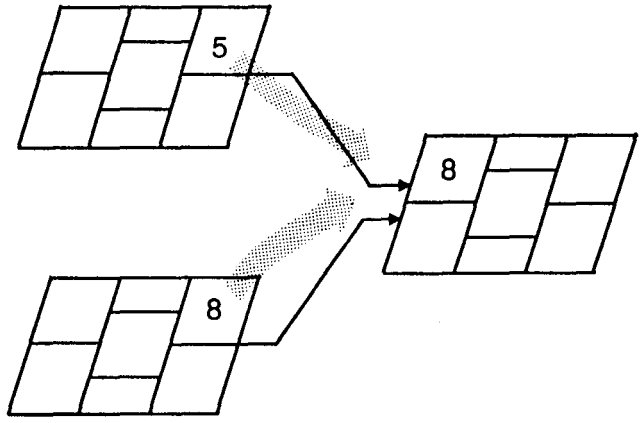

Figure 2-10. Advancing the largest early finish time

Using this same systematic process, continue working through the entire logic diagram, computing all early start and early finish times. This computational movement through the logic diagram is known as the *forward pass.* At the finish node, the overall duration for the project will be the largest early finish time of all activity nodes leading into the finish node. In the example on the next page, the project duration will be fourteen days, as determined by the sequence of construction and the time duration on each activity, culminating in the early finish time at node 55 of fourteen days (Figure 2- 11).

Example: Node 30 has two arrows leading into it, from nodes 15 and 25. To determine the early start time of node 30, use the larger of the two early finish times of node 15 (6) and node 25 (5). In this case, 6 would be the appropriate early start time for node 30.

Late finish/late start. The *late finish times* are positioned in the lower right corner of the activity nodes. These are the latest times the activity events may finish without delaying the entire project. Since the last activities (in the above example, activities 30 and 55) are both at the end of the fourteen-day project, the latest time that both these events can finish is the project duration's finish, or the end of day fourteen. The number fourteen, then, should be put in the lower right corner of both

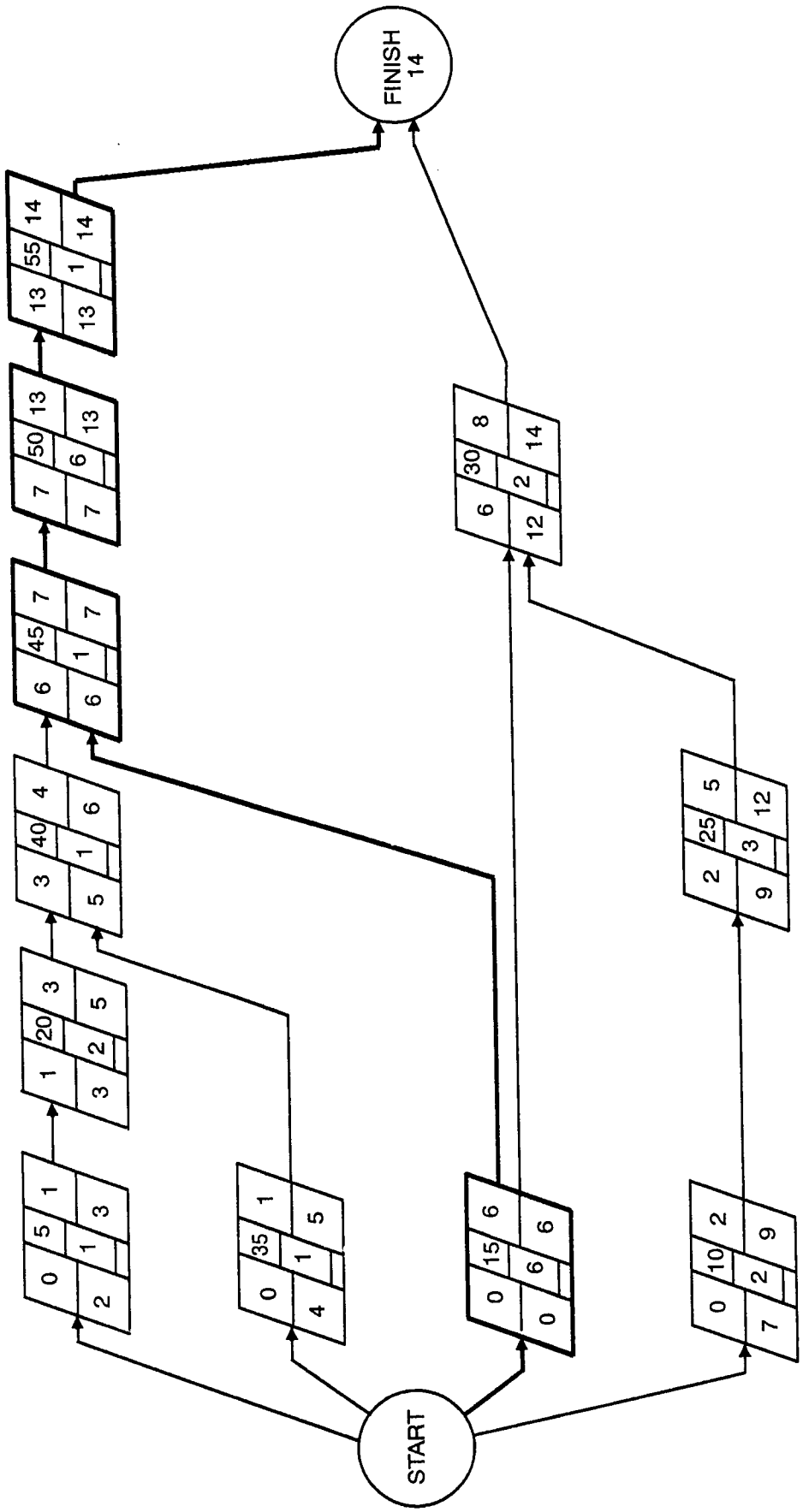

Figure 2-11. CPM showing project duration

nodes. Subtract the duration of each activity (center of the node) from its late finish time to compute the late start time, positioned in the lower left corner of the activity node (Figure 2-12). The *late start time* is the latest time the activity event may start without delaying the entire project, if indeed the duration estimate is accurate.

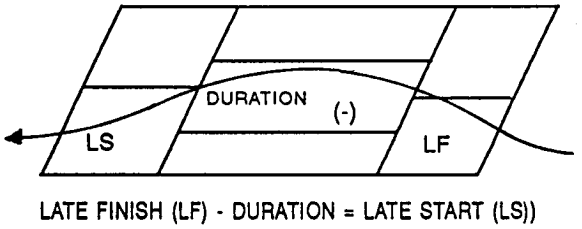

Figure 2-12. Late start time

Following the precedence arrows **backward** within the logic diagram (right to left), the previous activity's late finish time (at the tail of an arrow) is the same as the next activity's late start time (at the head of an arrow). Do not regard the early start and early finish times within the nodes at this time. To determine an activity's late finish time when more than one arrow tail leads away from its node, choose the **smallest** late start time of all activities at the arrows' heads (Figure 2-13). Logically, an activity must finish before **all** follow-on activities may begin.

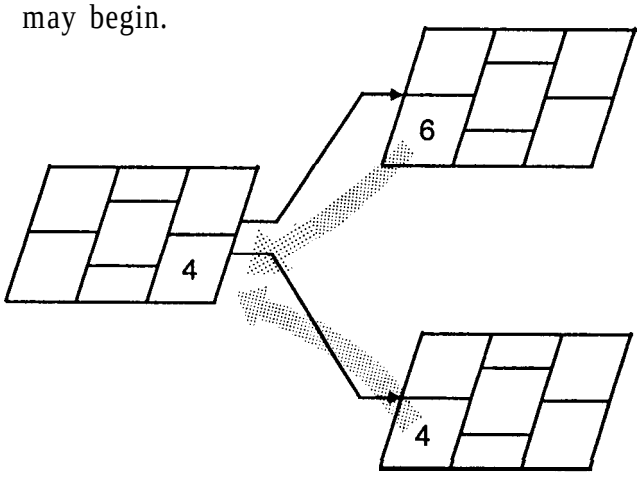

Figure 2-13. Retrieving the smallest late start time

Using this same systematic process, continue working **backward** through the entire logic diagram (against the arrows), computing all late finish and late start times. This computational movement back through the logic diagram is known as the *backward pass.* Back near the start node, at least one of the late start times of an activity coming from the start node must be zero. In the above example, the late start time of node 15 is zero (Figure 2-11, page 2- 11).

Example: Node 15 has two arrows leading from it, to nodes 30 and 45. To determine the late finish time of node 15, consider the smaller of the two late start times of node 30 (12) and node 45 (6). In this case, 6 would be the appropriate late finish time for node 15.

FLOAT CRITICAL ACTIVITIES, AND THE CRITICAL PATH

A critical activity can be determined from the logic network by applying the following rules:

Rule 1. The early start (ES) time for a particular activity is the same as the late start (LS) time.

Rule 2. The early finish (EF) time for a particular activity is the same as the late finish (LF) time.

Rule 3. The ES or LS added to the duration of the activity results in the EF or LF.

In the above example, nodes 15, 45, 50, and 55 meet the three listed rules, thus making them *critical activities.* A critical activity, if delayed by any amount of time, will delay the entire project's completion by the same amount of time. Critical activities, when linked together, will always form a path along arrows from the start node to the finish node, called a *critical path.* A logic arrow between two critical activities usually forms the critical path, but not always; the path between two critical activities is critical only when the EF of a critical activity is equal to the ES of the following critical activity. If it is not, the critical path branches off to another critical activity before linking back up. The critical path

may indeed branch out or come back together at any point, but there will always be one or more critical paths. All critical paths must be continuous; any critical path that does not start at the start node and end at the finish node indicates a logic mistake. Critical paths are indicated on the logic diagram by some method such as double lines, bold lines, or highlighted color (see Figure 2-11, page 2- 11). Any activity node not on the critical path will contain some *float.* Float is extra time available to complete an activity beyond the activity's actual duration, such as having six days available to do four days worth of work. It is the scheduling leeway. Naturally, all activities on the critical path will not have any float.

Total float. *Total float* (TF) is the entire amount of time that an activity may be delayed without delaying the project's estimated completion time. Total float for an activity is determined by the equation *TF = LS - ES* or *TF = LF - EF.*

Both equations will yield the same answer if the manager has properly computed the LS, ES, LF, and EF. Total float consists of the sum of interfering float (IF) and free float (FF): *TF = IF + FF.*

Interfering float. *Interfering float* is time available to delay an activity without delaying the entire project's estimated completion time, **but** delaying an activity into interfering float will delay the start of one or more other noncritical activities later in the project. Interfering float for an activity is determined by the equation *IF = LF - (ES of following activity).*

In the logic network, if more than one activity logically follows the activity in question, choose the smallest ES of the choices for the above equation.

Free float. *Free float* is also time available to delay an activity without delaying the project's estimated completion time **and** without delaying the start of any other activity in the project. Free float for an activity is determined by the equation *FF = TF - IF.*

Example: Activity 25 is not on the critical path, so it must haue float. Total float would be 7 (LS-ES or LF-EF). Interfering float would be 6 (LF of node 25- ES *of node 30). Free float would be 1 (TF-IF).*

SCHEDULING

The manager is now able to construct an activity schedule, known as an **early start schedule.** This schedule, when coupled with a logic diagram, graphically shows all necessary planning information for the manager. The first step is to list all activities in numerical order. After each activity, note in parentheses all immediately dependent activities, or those activities that are connected with an arrow. For example, since activities 30 and 45 cannot begin until activity 15 is complete, annotate activity 15 in the schedule like this: 15 (30,45). If an activity leads into the finish node, put an "F" in the parentheses after the activity number, or just list the activity number with no parentheses.

The next step is to mark on the schedule the time frame for each activity during which each activity may be performed without delaying the project or violating any of the diagram sequence relationships.

Consider node 40 in Figure 2-11. The ES shows that the earliest this activity can begin is the end of day three (or the beginning of day four). Thus, the beginning of day four to the end of day six (as determined from the LF) is the available time span in which to complete this activity. Because of the nature of the logic diagram, this activity cannot be scheduled earlier, since activity 20 must be completed first. It cannot be scheduled later, for that would delay the entire project. As a reminder to schedule the right bracket at the beginning (morning) of the following day, use "ES + 1" and "LF" as brackets (Figure 2-14, page 2-14).

Once the brackets are placed correctly, the next step is to make a trial schedule, scheduling each activity as soon as possible within the time frame, or flush with the left bracket. To schedule a particular activity,

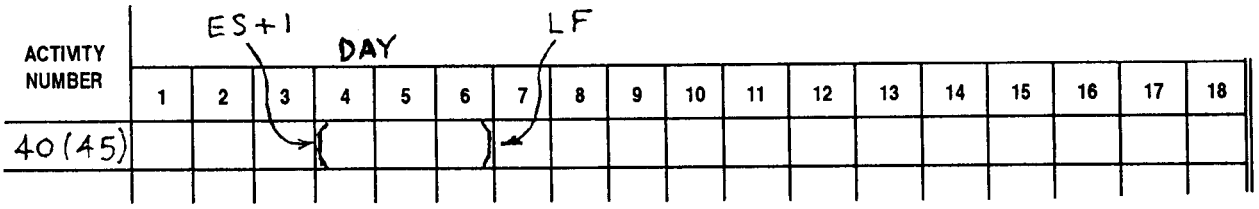

Figure 2-14. Bracketing the time span

place the number of each kind of resource inside each box along the activity line. Do not exceed the activity's duration; stop at the end of the early finish time day. The remaining boxes within the brackets are left blank for now and will become either free or interfering float.

Example: Activity 40 requires two squads for one day for maximum efficiency. To show this activity scheduled as soon as possible, place the number 2 (number of squads) in the first box only within the brackets (duration) as shown in Figure 2-15.

Scheduling all the activities as soon as possible yields the early start schedule as shown in Figure 2-16. For clarity, only the squads which are necessary for each activity are shown. All activities are scheduled to begin at their ES times.

The "Xs" on the right end of some of the bracketed activities denote days of interfering float. To figure these IF days, use the formulas given earlier to compute total, interfering, and free float. For those activities that have interfering float, begin at the right bracket and work to the left, placing an "X" in each box for each day of interfering float. For activities 25 and 35, interfering float is marked to a point, and the remaining blank boxes within the brackets are free float. Some activities have all free float (activity 40), and some have all interfering float (activity 10). All noncritical activities that are followed immediately by the finish node in the logic diagram will always have all free float (activity 30).

To double check proper placement of the interfering float "Xs", consider the numbers in parentheses after the activity numbers on the schedule. If a dependent (follow-on) activity is scheduled to begin before the end bracket of the activity in question, then that activity will have interfering float starting at the day of the beginning of the dependent activity. For example, activity 35(40) begins on day 1 and the following activity, activity 40(45), begins on day 4. Therefore, days 4 and 5 of activity 35(40) will be interfering float, because if activity 35(40) is delayed past day three, it will delay activity 40(45). Remember, however, that this will not yet delay the entire duration of the project, because activity 40(45) can be delayed into free float for two days before it bumps into the right bracket, and becomes "critical". If, hypothetically, activity 40(45) were delayed into interfering float

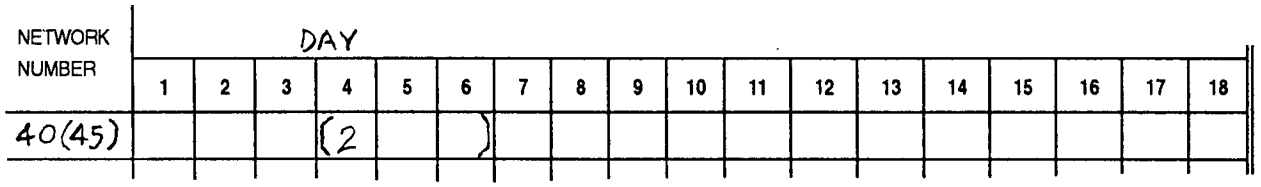

Figure 2-15. Scheduling resources

NETWORK NUMBER	EARLY START SCHEDULE																	
	1	2	3	4	5	6	7	8	9	10	11	12	13	14	15	16	17	18
5(20)	[1	X	X]															
10(25)	[2	2	X	X	X	X	X	X	X]									
15(30,45)	[1	1	1	1	1	1]												
20(40)		[2	2	X	X]													
25(30)			[1	1	1		X	X	X	X	X	X]						
30							[1	1						]				
35(40)	[1			X	X]													
40(45)				[2		]												
45(50)							[3]											
50(55)								[1	1	1	1	1	1]					
55														[1]				
TOTAL SQUADS	5	5	4	4	2	1	4	2	1	1	1	1	1	1				

Figure 2-16. Early start schedule showing float

also, it would subsequently delay some or all of its follow-on activities, and so on.

In cases where many different kinds of resources are necessary for an activity such as activity 15, managers may choose to use several lines contained within one set of tall brackets, as shown in Figure 2-17, page 2-16, and use each line for a different type of resource. For example, "5T" represents a 5-ton truck, "SL" represents a scoop loader, and "SQ" represents a squad. This is known as a *multiple-resource schedule.* When summing resources by the time period across the bottom of the early start schedule, remember to sum for each different kind of resource.

As can be determined from the multiple-resource schedule, summed resources often exceed available amounts for a given day, and activities must be delayed (into float whenever possible) to spread the resources' use across the time frame of the project. See Appendix B for the systematic procedure to constrain resources and for a sample problem.

REDUCTION OF THE PROJECT

If the CPM indicates that the project's duration exceeds what higher headquarters gave as a completion date, the manager should examine the logic diagram's critical path to find activity durations which may be shortened. This is known as *expediting, compressing,* or *crashing* the project. Keep in mind, however, that to shorten the project duration, managers must focus on critical activities only on the critical path. Shortening a noncritical activity will not shorten the project duration. However, increasing the allocation of resources to activities which fall on the critical path may reduce the duration of the project. Additional equipment and personnel can be committed or the same equipment and personnel can be used for longer hours. Normally, a moderately

NETWORK NUMBER	EARLY START SCHEDULE																	
	1	2	3	4	5	6	7	8	9	10	11	12	13	14	15	16	17	18
5(20)	1D7																	
	1SQ																	
10(25)	2D7	2D7																
	2SQ	2SQ																
15(30,45)	2-5T	2-5T	2-5T	2-5T	2-5T	2-5T												
	1SL	1SL	1SL	1SL	1SL	1SL												
	1SQ	1SQ	1SQ	1SQ	1SQ	1SQ												
20(40)		2SQ	2SQ															
25(30)			2D7	2D7	2D7													
			1SF	1SF	1SF													
			1SQ	1SQ	1SQ													
30							1D7	1D7										
							2-5T	2-5T										
							1SL	1SL										
							1SQ	1SQ										
35(40)	1SQ																	
40(45)				2SQ														
45(50)							3SQ											
50(55)								1SQ	1SQ	1SQ	1SQ	1SQ	1SQ					
55														1SQ				
TOTAL RESOURCES																		
DOZERS (D7)	3	2	2	2	2	0	1	1	0	0	0	0	0	0				
5-TONS (5T)	2	2	2	2	2	2	2	2	0	0	0	0	0	0				
SCP LDRS (SL)	1	1	1	1	1	1	1	1	0	0	0	0	0	0				
SHEEPS-FOOT (SF)	0	0	1	1	1	0	0	0	0	0	0	0	0	0				
SQUADS (SQ)	5	5	4	4	2	1	4	2	1	1	1	1	1	1				

Figure 2-17. Scheduling multiple resources

extended workday is the most economical and productive solution. Managers may also choose to work double shifts or work on weekends. When expediting activities, however, consider the long-term effects on safety, morale, and equipment use and a subsequent decrease in efficiency.

Materials. Committing additional materials may also reduce a project's duration. For example, using individual sets of forms in constructing concrete slabs is faster than reusing forms. A construction agency might expedite material deliveries by providing its own transportation. After a critical path activity is reduced by one time unit, the logic diagram must be checked to determine whether or not additional paths have become critical, such as those activities that previously had only one day of float.

Cost. If the estimates used in the CPM network reflect the most efficient methods of construction, crashing the project to finish before the determined duration will always cost money. In order to reduce project duration, the estimator must first identify how much each activity can be reduced in time and how much this reduction will cost. Then, through successive reductions in the duration of the critical path(s), the project is expedited at the least additional cost.

Redefined logic. The manager should review all the activities on the critical path to examine if a situation exists where a preferred logic relationship is perhaps not absolutely necessary. There are two ways the logic can be redefined:

1. Move activities within the logic diagram. This is a technique that could be used when the manager finds that two sequential activities could actually be done concurrently. For example, if it will take another hour before the small emplacement excavator (SEE) shows up to dig a fighting position, soldiers with hand tools can actually start early and let the SEE finish upon its arrival.

2. Introduce a lag factor for an activity that does not have to be entirely completed before a following activity can be started. For example, although a road must be compacted before it can be paved, all 10 kilometers of the road need not be compacted before the paving can begin on the areas already compacted. A 25 percent lag factor may be introduced, such that paving can begin once 25 percent of the compacting is complete. In Figure 2-18, page 2-18, the addition of a 25% lag factor shows how it reduces the duration from 24 to 15 time periods.

The formula to figure the ES of a node after the lag factor on the forward pass is:

(Duration of activity x *% lag) + ES = ES of following actiuity*

The formula to figure the LF of a node before the lag factor on the backward pass is:

[Duration of previous activity x (l-% *lag)] + LS= LF of previous activity*

USE OF THE COMPUTER

Engineering skill is required to break a project down into an activities list, construct PIB relationships, and estimate activity durations and crew sizes. Once these steps are complete, the rest of the CPM (including the logic relationships and diagram, node times, and scheduling) can be done by computer. With further estimating data, project expediting can also be done by computer. The computer is significantly faster than manual computations for time analysis of networks with many activities. CPM updating, reporting, and war-gaming are also much easier by computer. Before undertaking the CPM, investigate the availability of a computer with CPM programs.

An automated version of the AFCS, called Theater Construction Management System (TCMS), is available. This package includes all AFCS drawings and bills of materials, labor and equipment estimates, construction directives, and an automated drafting program. Additionally, TCMS provides a link for all this data and capability to an automated project-management software program,

allowing planners greater flexibility and capability than ever before. For more information on TCMS, contact the AFCS section of the Huntsville, Alabama, division of the Corps of Engineers.

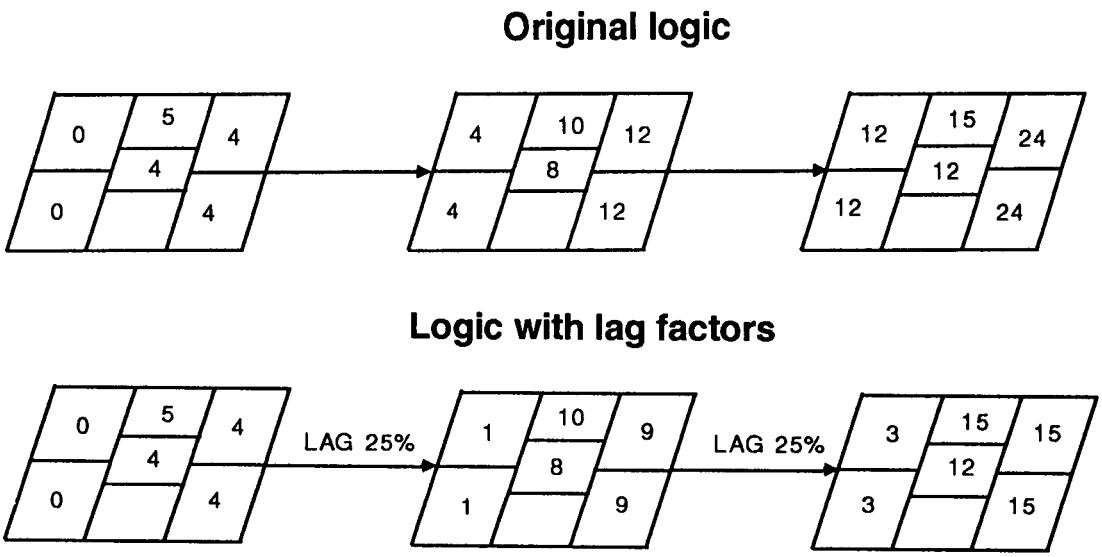

Activity	Description
5 (10)	Clear and Grub
10 (15)	Scarify and Compact
15	Base Course

Figure 2-18. Lag factor

ACTIVITY ESTIMATES

CHAPTER 3

IMPORTANCE OF DETAILED ESTIMATES

One of the most important steps in planning a project is estimating activity durations. Carelessly made estimates may lead to failure to meet completion dates. They may cause uneconomical use of personnel, materials, time, and equipment and they may seriously jeopardize a tactical or strategic situation. preliminary estimates yield approximate data for planning purposes. They are not exact for tasks of any large size or complexity. More accurate, detailed estimates are vital to the successful planning and execution of a mission. Succeeding steps in detailed planning depend upon valid estimates. For these reasons, the military project manager must be a good estimator and must have competent estimators in the organization.

THE ESTIMATING PROCESS

Estimating procedures are designed to yield various results. Initially, these results take the form of material requirements or bills of materials (BOM) and equipment/personnel requirements. Ultimately, the manager can derive an estimate of the time needed to accomplish each of the tasks in a project. The following paragraphs detail a sequential procedure to aid the estimator:

MATERIALS ESTIMATES

Step 1. Work items. Determine the work items. These should agree with the CPM activities list, except where a more detailed breakdown is required for accuracy and completeness.

Step 2. Materials. Determine the materials required for a given work item. Study the plans and specifications in detail to ensure that all necessary materials are included.

Step 3. Quantities. Calculate the quantity of each item of material needed in the work item.

Step 4. Waste factors. Apply a waste factor, if appropriate, to each of the materials required. The waste factor should reflect conditions at the work site, intended use of the material, and skill level of the troops working with the material. Include spillage, breakage, cutting waste, and spoilage in the waste factor. Typical waste factors are in Appendix C. Investigate any unusually high waste factor to determine if any action can be taken to reduce it.

Step 5. Total material requirement. Combine the originally calculated quantity and the allowance for waste to give the total material required.

Step 6. Bill of materials. Draw up a consolidated BOM by combining like materials from all the work items to obtain a grand total for each type of material needed. This BOM should contain all the materials necessary to complete the job. The BOM is submitted through the appropriate supply channels for procurement.

EQUIPMENT/PERSONNEL ESTIMATES

Step 1. Work items. List the work items to be estimated. In most cases, these will be the work items used in the material estimate, although additional activities which require workers or equipment without expending materials may be added.

Step 2. Available resources and methods. Consider available resources and methods of construction, to decide how to accomplish the work component. Describe the method of construction, including sketches (as required), to provide guidance for the supervisor. If the method of construction is different from the method the work rate is based upon, adjust the actual work rate for this difference.

Step 3. Material usage. From the material estimate, determine the quantity of material that will be handled. This material estimate usually includes a waste factor. However, since the purpose here is to apply a work rate to the quantity of material handled, accuracy in determining how much of the material will be used at the specified work rate is important. For example, if the work rate for setting forms is given in terms of linear feet of formwork per unit of time and if extra form material has been ordered as waste, the extra form material should be omitted from this calculation. The amount of forms to be set is determined by the configuration of the concrete structure rather than by the quantity of material ordered. Even if the waste allowance is used, it most likely will be used to replace broken, rotten, or lost wood and thus not add to the linear feet of formwork actually set.

Step 4. Work rate. Select a work rate appropriate for the work item being estimated. Chapters 6 through 17 provide estimating tables for various construction tasks. Estimates given in these chapters are based on units deployed as combat support service or category III units and therefore should be adjusted for operation in other categories. (See Army Regulation (AR) 570-2 for additional information.) TM 5-304 provides an indicator of adjustments to estimates for the environmental factor. If the information in these tables is inadequate, consult other sources such as other Army manuals, civilian texts, experience, and unit records. An accurate work rate is the heart of a good estimate.

Step 5. Labor. Calculate the standard effort required to accomplish the work item. If the work rate has been given in the usual form of man-hours (the amount of effort produced by one person working for one hour) or man-days per unit of quantity, multiply the quantity from Step 3 by the work rate to get the total man-hours or man-days for the task. When a work rate is presented in any other form, the planner should first convert to effort per unit of quantity.

Quantity x *Work Rate = Standard Effort*

Step 6. Efficiency factor. Decide whether the unit or organization can operate at the work rate given. If the work rate used in the estimate has been taken from a standard source, expect variations in local conditions. To compensate for this, apply an efficiency factor. This factor is a measure of the effectiveness of the troops in their situation compared to the standard conditions used in the estimating reference source. It is most commonly given as a percentage.

Step 7. Total labor hours. Divide the standard effort computed in Step 5 by the work-force efficiency to find "troop effort." Thus, if the standard effort originally calculated was 60 man-hours and the unit operates at 80 percent efficiency, the unit will have to expend 75 man-hours to complete the task.

Standard Effort/Efficiency = Troop Effort

Step *8.* **Project duration.** Divide the total effort by the crew size to obtain the duration. The crew must be capable of operating at the efficiency used in the estimate. If not, the efficiency factor must be readjusted, changing the troop effort and affecting the duration.

Troop Effort/Crew Size = Duration

WORK-SHEET ESTIMATES

Figure 3-1 shows a sample format for estimating work sheets based on the guidance given in this chapter. While the format shown is not standard, it can be helpful as a guideline for estimating material, man-hours, and equipment. The situation shown requires the excavation of a rectangular ditch 60 feet long, 3 feet wide, and 4 feet deep. The work is to be done by hand; construction troops are in good condition, operating at 90 percent efficiency.

PROJECT: _____ **ACTIVITY ESTIMATE SHEET**

ACTIVITY DESCRIPTION: EXCAVATE TRENCH BY HAND, NO SHORING INCLUDED

MATERIALS TAKE-OFF

MATERIAL	COMPUTATIONS	QUANTITY	WASTE	TOT QUANT	REMARKS
MEDIUM EARTH	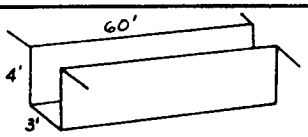 $60' \times 3' \times 4' \times \frac{1}{27}\frac{cf}{CY} = \frac{720}{27}$ CY = 26.7 CUBIC YARDS	26.7	N/A	26.7	~ 27 CY

EQUIPMENT—MANPOWER

COMPONENT	TECHNOLOGY	QUANTITY	WORK RATE	STD EFFORT	EFF	TRP EFFORT	CREW	DUR	REMARKS
EXCAVATE TRENCH	USE GENERAL LABOR WITH HAND TOOLS	27 CY	1.75 MH/CY	47.3 MH	90%	52.5 MH	4	13.2 H.	WORK RATE FR UNIT RECORDS EFF REDUCED FOR HIGH TEMP (90°)

SKILLS		EQUIPMENT OPERATORS		EQUIPMENT	
Supervisors		Truck		Trucks	
Carpenters		Dozer		Dozers	
Plumbers		Scraper		Scrapers	
Electricians		Grader		Graders	
General Labor	4	Crane		Cranes	
Masons		Mixer		Mixers	
Painters		Roller		Rollers	

Figure 3-1. Estimate sheet

OPTIMUM LUMBER LENGTH CALCULATIONS

Lumber is ordered by standard commercial lengths. The lengths available in engineer depots range from 8 to 20 feet, in 2-foot increments. Always try to order the shorter 8-foot, 10-foot, and 12-foot standard lengths most commonly used in the military.

Length calculation. In many parts of a TO building, it is obvious what commercial lengths should be ordered. For example, if the joists and girders are 10 feet, 0 inches long, 10-foot commercial lengths are obviously needed. There are places in the building, however, where it is not quite as evident what length should be ordered. The manager must then calculate the most economical standard length for the least waste. The procedure for this is as follows:

- *Number pieces/standard lengths.* Calculate the number of pieces per standard length for each of the three standard lengths (8, 10, 12). If this number is not an integer, round down.

$$\frac{\text{no. pieces}}{\text{standard length}} = \frac{\text{one standard length (in)}}{\text{length of one piece (in)}}$$

- *Number standard lengths required.* Find the number of standard lengths required for each of the three alternatives. If this number is not an integer, round up.

$$\text{no. of standard lengths} = \frac{\text{no. of pieces required}}{\text{no. pieces per standard length}}$$

- *Total linear feet required.* Calculate the total linear feet required for each of the three standard lengths and use the least.

linear feet =
one standard length (ft) x number of standard lengths

Sample problem. 50 pieces of 2- by 4-inch lumber, 27 inches long, are required. Find the most economical length and the number of pieces to be ordered. There are three standard lengths which can be ordered: 8-foot, 10-foot, or 12-foot. The following analysis examines each:

- *Number pieces/standard length.*

8 feet = 96 inches --- 96/27 = 3+
10 feet = 120 inches --- 120/27 = 4+
12 feet = 144 inches --- 144/27 = 5+

Thus, from each 96-inch length, we could get 3 pieces; from each 120-inch length, 4 pieces; and from each 144-inch length, 5 pieces.

- *Number standard lengths required.*

8 feet--- 50/3 = 16+
10 feet --- *50/4* = 12+
12 feet --- *50/5* = 10

- *Total linear feet required.*

8 feet --- 17 x 8 feet = 136 linear feet
10 feet --- 13 x 10 feet = 130 linear feet
12 feet --- 10 x 12 feet = 120 linear feet

Clearly, 12-foot standard lengths result in the minimum amount of lumber required, and 10 of these 12-foot lengths should be ordered.

EFFICIENT SITE LAYOUT CHAPTER 4

PRINCIPLES

IMPORTANCE

Site layout is the arrangement of the facilities and personnel required to carry out a project. It is one of the most important phases of construction engineering. The objective is to plan the physical arrangement of the site so that the construction process is carried out as efficiently as possible. This means minimum movement of materials, equipment, and personnel, and minimum processing time for any individual item.

This chapter presents three approaches to the site layout --systems analysis, time-motion studies, and methods engineering. The three approaches can be used separately or in combinations to gain efficiency in the site arrangement of any construction project. However, site layout analysis is essential for batch plants, quarries, borrow pits, prefabrication yards, and materials handling areas.

RESPONSIBILITIES

By custom, the first-line supervisor is responsible for efficient site layout. However, this supervisor is often too involved in the day-to-day operation of the project to be able to step back and look at the overall arrangement of the site. Also, the supervisor may have a routine way of doing a job which may not be the most efficient for a particular construction environment. Battalion and company operations officers are in the best position to provide site layout analysis for construction projects under their control. This analysis should be made available to the construction unit both in the project planning phase and during construction.

INFLUENCING FACTORS

Many factors will influence site layout. Four important considerations are: required facilities, topography, project size, and construction aids.

Required facilities. The manager should make a list of all facilities necessary to support the work site. This list should include in-place equipment, storage areas, maintenance areas, motor pools, first-aid stations, latrines, dining facilities, water points, billeting areas, work areas, control centers, and security positions. Since the effort required to plan and construct the site must be deducted from the total construction effort, the site should be the absolute minimum required for efficiency.

Topography. Two identical construction projects may have entirely different physical configurations because of differing topographical conditions. The manager must incorporate the eight site factors listed in Chapter 1 into any site layout analysis. The following examples show how site factors influence site layout:

Existing facilities. Existing facilities, such as utility lines or buildings, may determine the location of critical items.

Terrain. Terrain will be a major factor in the layout of horizontal construction. If possible, locate borrow pits and quarries so that the grade favors the load (empty, going uphill; full, going downhill).

Drainage. Drainage is a crucial element in any layout. Design the site so that normal runoff will not halt construction or transportation. Providing adequate drainage may involve considerable construction effort. The supervisor must decide at what point the cost of additional drainage structures becomes greater than the risk of flooding.

Project size. The site for construction of one TO building will look very different from the site for construction of 50 buildings. The larger the job, the greater the opportunity to take advantage of specialization. The longer the construction unit plans to remain on a project site, the greater the initial effort in preparing the site. For example, it would not be economical to upgrade a haul road to a borrow pit to be used for only a few days. However, it would be economical if this pit is to be used for several weeks. The construction site is generally not included in the plans and specifications of the project.

Construction aids. Any device or apparatus installed to facilitate construction is a construction aid. Loading traps and jigs or templates for timber or steel fabrication are typical. To be practical, a construction aid must save more time than is required to establish and remove it. For example, suppose a troop camp is being built using standard TO construction and involving the fabrication of 2,180 identical roof trusses. A decision must be reached as to how the truss will be made -- prefabricated at a central mill or cut and assembled individually at each building. Each truss will take an estimated 1.5 man-hours to build at a central mill and 1.0 man-hours to build individually at the building site. The time saved is 2,180 x 0.5, or 1,090 man-hours. If fewer than 1,090 man-hours are needed to set up and dismantle the central truss-fabricating mill, its construction is justified. If more hours are required, its construction is not justified. An aid that is efficient on one job is not necessarily efficient on another.

PREFABRICATION

Modern prefabrication techniques may have several advantages over on-site construction: factory assembly, interchangeability of components, and labor savings. Some prefabrication is used in most construction. It ranges from the use of precut structural parts and fastenings to off-site assembly of building sections. How much prefabrication is practical depends upon several factors. The manager must consider site convenience, climate, centralized management, scale and physical nature of the project, and program flexibility. Within each of these areas, however, there are variations. For that reason, labor savings and estimates of other advantages of prefabrication cannot be precisely calculated. However, the estimator should have a good understanding of the advantages of prefabrication in order to decide when its use would be practical.

Factory assembly. Working in factories reduces loss of time due to bad weather and other physical hazards. Quality control is easier through the use of more complex machinery and concentrated facilities. Storage security allows greater quantities of materials to be ordered and assembled in lots. Working conditions are usually better than those in the field and the resulting morale may increase efficiency.

Disadvantages of factory assembly are the need to construct the factory and any difficulty in making last-minute changes at the construction site. Also, transportation costs are doubled if raw materials must travel to a distant factory before they are ready for the construction site.

Component interchangeability. With interchangeable components, many types of structures can be built from the same components, but design flexibility is limited. Structural components may be either precut pieces, frames, sheathed panels, or finished

building sections. Partial assemblies may be stored for future needs. Larger parts reduce fitting errors at the site and simplify scheduling, since fewer steps are involved in final construction. However, savings may be offset by greater difficulty in joining sections and higher transportation costs for these fragile units. Interchangeability requires modular coordination, and it often requires greater skill to assure precision in subsequent fitting.

Labor savings. The major reasons for prefabricated construction are reduced construction time and use of general instead of skilled labor. Designs involving platform construction, panel, and/or modular components allow for maximum utilization of prefabrication. Establishing a prefabrication yard requires highly skilled personnel and may involve several days of effort, but efficient layout and organization of personnel will offset this work. Laying out the yard to minimize the distances that materials have to be carried will have a tremendous effect on the duration of the project. Once into the prefabrication process, most of the work can be accomplished by general labor or local personnel. The degree of substitution is dependent on breaking the operation down into simple and repetitive motions, At the building site, the use of prefabricated components will also greatly reduce the effort involved in erection.

METHODS

SYSTEMS ANALYSIS

The first approach which could be used in a layout problem is the systems analysis approach. This method consists of the following steps (see Table 4-1 for the systems analysis work sheet):

Table 4-1. Systems analysis work sheet

Industrial Site Configuration			
Design Factor	**Weight (1 to 10)**	**Evaluation (-5 to +5)**	**Score**
Traffic flow	8	-2	-16
Earthwork required	7	-1	-7
Wind effects	4	+2	+8
Drainage	10	+5	+50
Maintenance accessibility	6	+4	+24
Product accessibility	9	+2	+18
Headwalls required	3	-3	-9
Materials handling	6	-2	-12
Stockpile areas	5	0	0
Generator location	2	-1	-2
Conveyors required	7	+1	+7
		(+) Subtotal	+107
		(-) Subtotal	- 46
		Total	61

Step 1. List the design factors to be considered for the layout. Assign a weight to each factor depending on its importance to the project.

Step 2. Obtain a large-scale map of the site (1: 1,000 or larger). It should show contours, natural resources, and existing facilities.

Step 3. List the facilities required for the project. For each facility, make a cutout to the same scale as the map.

Step 4. Place the cutouts on the map in several different feasible configurations. There is no set number of arrangements which must be considered, but taking three to five arrangements to start is a good rule of thumb.

Step 5. For each configuration, assign a number evaluation for each design factor based on the configuration's relative strengths and weaknesses. For example, one configuration may be best for drainage (+5 on the scale in Table 4-1, page 4-3), but weak on traffic flow (-2). Another configuration may have opposite ratings.

Step 6. Multiply factor weights by the evaluations and sum scores for each configuration. Using the configuration with the highest total, try to improve the total by making minor location changes.

This systems analysis approach does not eliminate engineering judgment. Listing and weighing design factors require experience and engineering skill, as does the evaluation of the various site configurations. However, systems analysis does provide a framework for discussion. Using systems analysis, site layout analysts can at least agree on the points on which they disagreed. Systems analysis allows the planner to focus on specific problem areas, to gather more data if necessary, and finally, to make a decision based on analysis rather than on intuition.

TIME-MOTION STUDIES

Once a project is under way, one of the most valuable pieces of equipment to the site layout analyst is the stopwatch. For any repetitive process, the analyst asks the question, "Can it be done better?" Thus, time-motion improvements increase efficiency by saving time and effort. Time-motion studies are easy to do, although it takes ingenuity to see changes which would improve routine processes.

First, the analyst finds a job that is being done over and over again. This could be a crane shovel operation, a haul, a paving operation, the assembly of a wall panel, or a standard maintenance procedure. Then, the analyst times the job, noting lost time due to delays of excessive movements from one place to another. Finally, the analyst suggests ways to eliminate delays or excess movements, and then retirees the new procedure.

Time-motion studies can result in increased efficiency through such specific improvements as reducing the swing angle of a crane shovel, eliminating the backing up of dump trucks, coordinating the pusher-dozer with the scraper, coordinating one apprentice with several bricklayers, and rearranging storage areas to reduce average movement distances.

METHODS ENGINEERING

Methods engineering enables the planner to make a step-by-step approach, analyzing and recording every detail involved. At the same time, the planner is able to sketch a layout plan that incorporates and conforms to the process as it is developed. When it is time to place this plan into operation, the person charged with setting up the site will know exactly what to do. Furthermore, after the operation is under way, the entire process should be analyzed in detail to determine whether further refinements can be made.

Charts and diagrams. Three charts or diagrams have been developed which simplify the planning process. They are commonly called flow diagrams, flow process charts, and layout plans, each designed for a

specific purpose. The flow diagram enables the planner to plot the flow of materials through the site. On the flow process chart, the planner details the processing of each type of material, indicating what takes place, the time required, and how far the material must be moved. The machines used are each considered in the same way as the workers. The layout plan shows the placement of equipment and materials to do a particular job.

Standard symbols. Standard symbols, approved by the American Society of Mechanical Engineers (ASME), are used to identify what is to occur in each step of a process (Figure 4-1). These steps are operations, transportation, inspections, delays, and storage. Identifying process steps in this manner helps the planner determine unnecessary steps and physical changes in materials.

FLOW DIAGRAM - THE FIRST STEP

The flow diagram follows the flow of materials through a sequence of operations. It helps the planner visualize and analyze the overall project. First, the planner determines the operational details of the job by considering the major steps required to process the various materials into the finished product. The objective is to determine an overall processing system with the least number of major steps, delays, and movements of material. This is the purpose of the flow diagram. When completed, the diagram will show the flow of materials through the plant as they are processed into the finished product.

Preparation. In preparing this diagram, the planner first lists all the major steps in successive order down the left side of the form. Next, the planner details what takes place by drawing the appropriate symbols (Figure 4-1) within each major step and then connecting all symbols by a single flow line.

Examples.

Flow diagram using one saw. Figure 4-2, page 4-6, shows a complete flow diagram in which only one power saw is used for cutting the members needed to fabricate the truss shown in Figure 4-3, page 4-7. The

Definition	Symbol	Utilization	Example
"Do" operations or main steps in a process	○	Operation	Cutting wood, digging a ditch or postioning a part
An operation which changes the shape of the material	●	Operation	Making a cut in a board
Movement of material from one place to another	⇨	Transportation	Carrying a truss or a unit
Verifies quality, quantity, or approval	□	Inspection	Checking a center line or testing equipment
Delay, awaiting completion of an interrelated job	D	Delay	Awaiting use
Keep	▽	Storage	Material in storage

Figure 4-1. Symbols used in a flow diagram

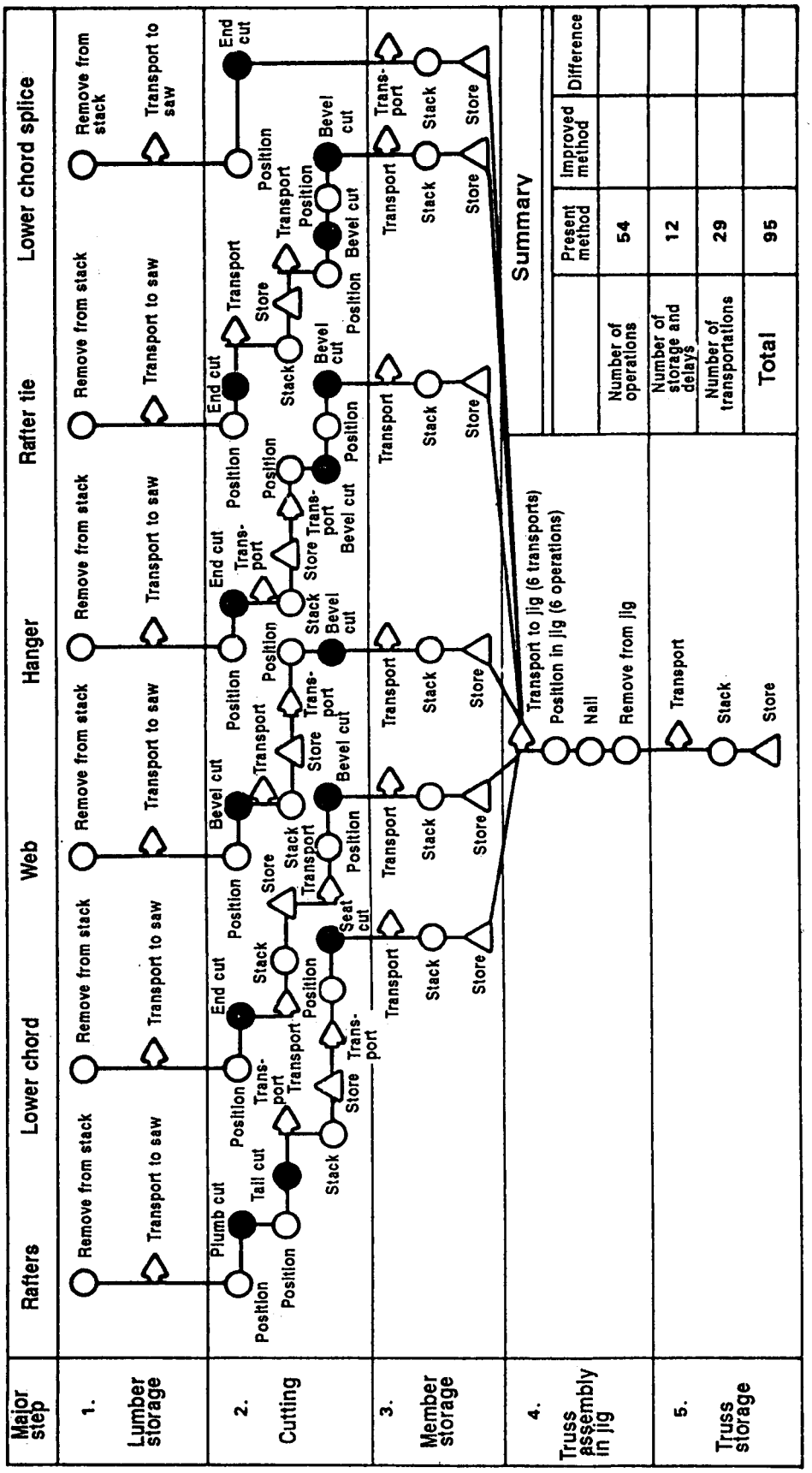
Major step
Rafters
Lower chord
Web
Hanger
Rafter tie
Lower chord splice
1. Lumber storage
2. Cutting
3. Member storage
4. Truss assembly in jig
5. Truss storage
Remove from stack
Transport to saw
Plumb cut
Tail cut
End cut
Bevel cut
Seat cut
Position
Transport
Store
Stack
Bevel cut
Transport to jig (6 transports)
Position in jig (6 operations)
Nail
Remove from jig
Summary
Present method
Improved method
Difference
Number of operations
54
Number of storage and delays
12
Number of transportations
29
Total
95

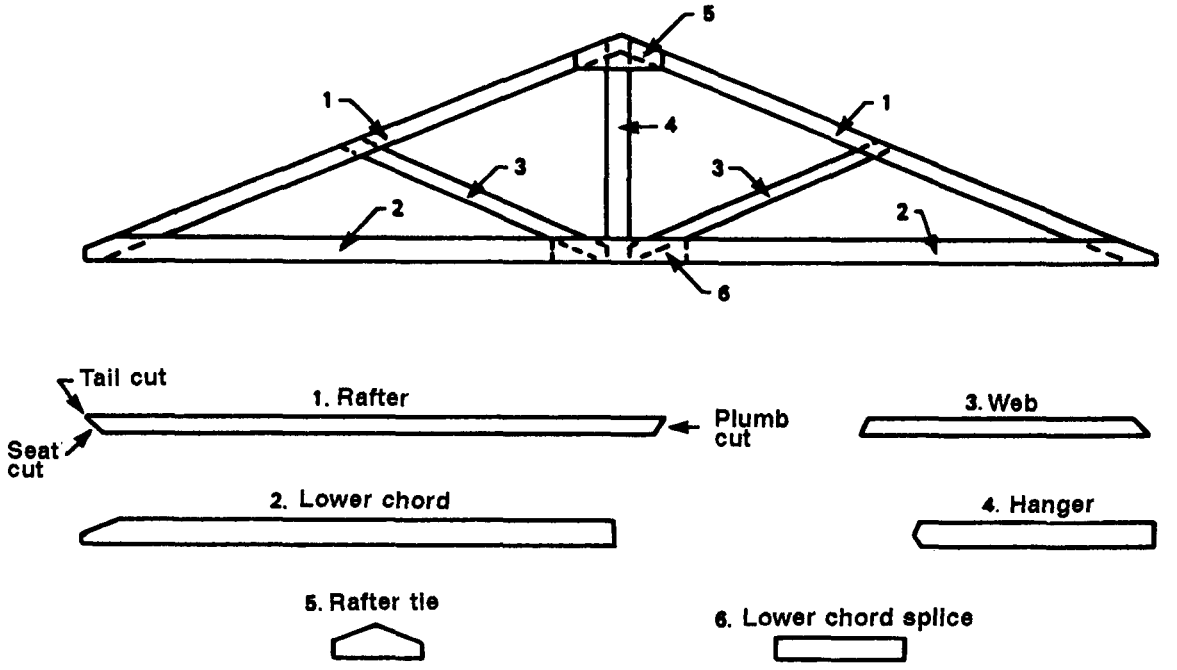

Item no.	Member	Pieces truss	Length in place	Size	Common length	Pieces length	Saw setups
1	Rafter	2	10'-11"	2" x 4"	12'	1	2
2	Lower chord	2	10'- 0"	1" x 6"	10'	1	2
3	Web	2	5'- 5"	2" x 4"	12'	2	2
4	Hanger	1	4'- 4½"	2" x 6"	14'	3	2
5	Rafter tie	1	1'- 6"	1" x 8"	12'	8	2
6	Lower chord splice	1	2'- 6"	2" x 6"	10'	4	1

Figure 4-3. Roof truss

material must be stacked to one side until a predetermined number have been cut. Then the angle of the saw blade must be adjusted to make the seat cut. A careful study of the various cuts that must be made for each member of the truss will show that all members except the lower chord splice require two separate saw setups to make the necessary cuts at the angles required. It is obvious that one saw is not adequate, and a better method must be found.

Flow diagram using two saws. Placing two power saws in the flow diagram (Figure 4-4, page 4-8) is a more workable solution. In comparing Figures 4-2 and 4-4, notice that the operations, storage and delays, and transportation have each been reduced in number Also notice that neither of these flow diagrams indicates how far the movements are, how long it takes for each step, or how many workers are required to perform the various steps. This information is given on the flow process chart.

FLOW PROCESS CHART - THE SECOND STEP

Use the flow process chart to analyze the details of the operation. As the second step, the chart is a tabulation of the chronological sequence of the details of each process in the flow diagram (first step, page 4-5). In addition, the flow process chart includes the time needed to accomplish each detail and the distances that materials are transported.

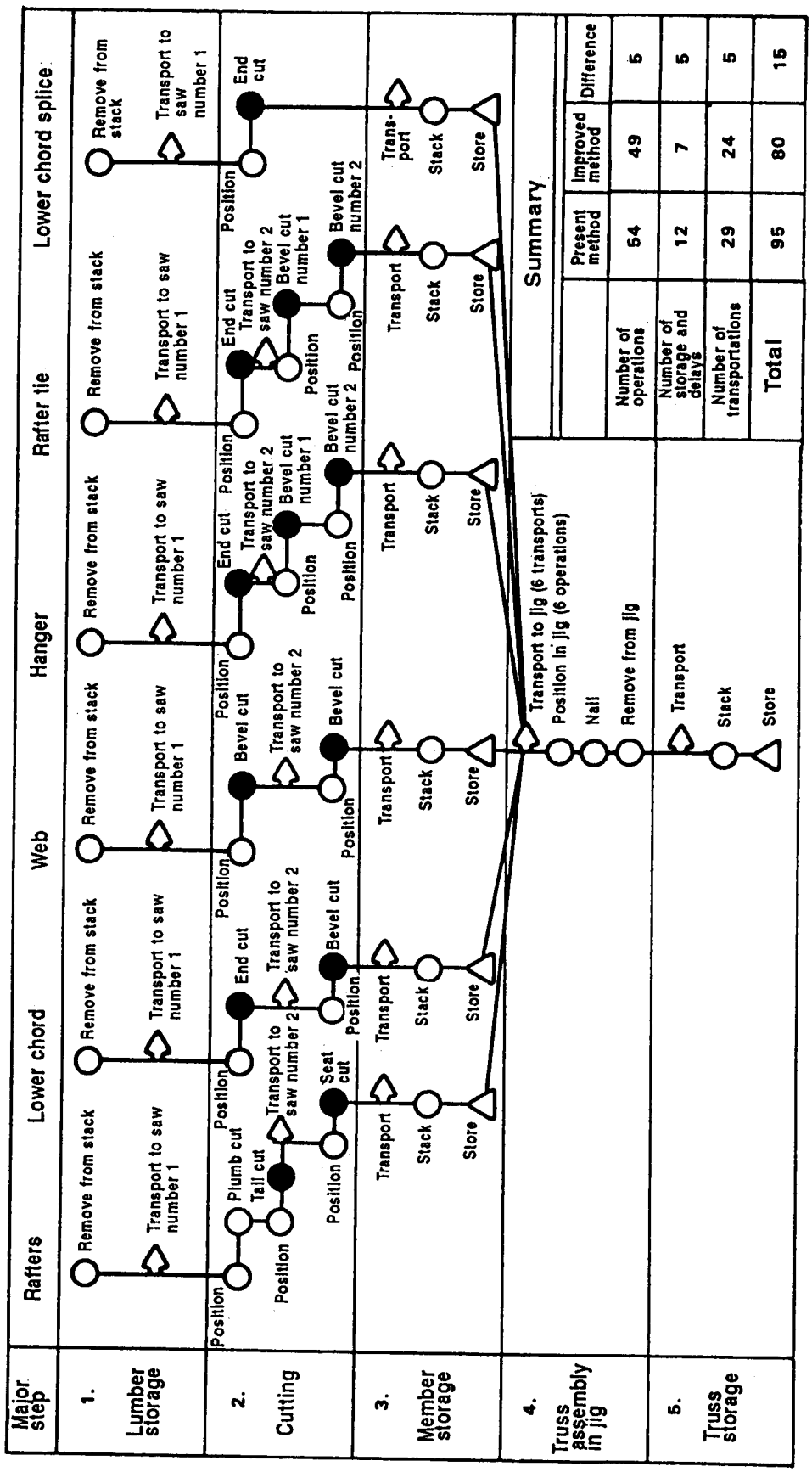

Figure 4-4. Flow diagram using two saws

Preparation. A flow process chart, Department of Defense (DD) Form 1723, provides a standard for process charting. The process of cutting rafters (Figure 4-5, page 4-10), using two saws and based on the flow diagram (Figure 4-4), will serve as an example.

NOTE: If DD Form 1723 is not available, use a blank sheet and follow the format shown in Figure 4-5.

Complete the data in the upper left corner on the form, being specific in regard to the identification of the process to be charted, the person or material being traced through the process, and the places or times that the process begins and ends.

List each detail of the process in brief narrative form in the left column (details of method) on the chart. This listing is developed from the flow, and details should be plotted in the sequence plotted therein.

In the column of symbols, trace the process by connecting, with a penciled line, the symbols which are appropriate to each step.

Enter in the distance column, where appropriate, how far the item will be moved.

In the quantity column, show the number of items being processed during each particular detail.

Opposite each detail in the time column, enter how long each step should take; the time factor should be stated under the notes column.

Enter the total number of actions included by each type of activity in the summary box in the upper right corner of the form.

NOTE: Use the flow process chart to detail either the movement of materials or the movement of workers through a process system. Do not detail the movements of both on the same form because it will confuse the user.

Analysis. Other columns are for analysis when reviewing the process. Study each step in detail. Is it possible to eliminate or combine certain details? Can distances and times be further reduced? Should sequences be changed? Can some operations be simplified? Who does the work? Who could do it better? Can changes be made to permit a person with less training and skill or more efficient machines to do the work? Where is the work done? Could it be done somewhere else more economically? When is the work to be done? Would it be better to do it at some other time? How is the work to be done? This suggests alternate possible machine methods or the use of machines instead of hand labor.

Inefficient methods. Such an analysis will show any unnecessary handling, excessive movements of materials, duplication of effort, excessive number of steps taken, number and kind of delays, labor inefficiencies, and so on. These are only part of the possible questions to ask about each recorded step in the operation in order to try to reduce the steps to a minimum and arrive at the simplest "paper picture" of the method. The more questions asked, the more a questioning and critical attitude toward work methods is developed.

Solutions. As the manager develops the best method of processing each member of the truss, site layout requirements may be analyzed in greater detail. The location of material stacks, equipment, parts storage, and assembly areas must be plotted and distances computed at the same time the manager develops the process charts.

Control factor. The end result of process charting is the calculation of the production rate for the given process. In general, the steps which cannot be accomplished concurrently control the time it takes to perform a process. In other words, they establish the control factor.

Establishment. To determine the control factor, first list all operations and the time required for each. Second, determine those which are performed concurrently. The remaining operations (those which cannot be accomplished concurrently) establish the control factor.

FLOW PROCESS CHART

NUMBER	PAGE NO.	NO. OF PAGES
J.0.0000	1	1

PROCESS: Cutting Rafters

MAN OR MATERIAL

CHART BEGINS: At Lumber Storage

CHART ENDS: At Parts Storage

CHARTED BY: CPT Behring

DATE: 2 July

ORGANIZATION: 477th Engr Const Bn

SUMMARY

ACTIONS	PRESENT NO.	PRESENT TIME	PROPOSED NO.	PROPOSED TIME	DIFFERENCE NO.	DIFFERENCE TIME
OPERATIONS			8	18		
TRANSPORTATIONS			3	15		
INSPECTIONS			0	0		
DELAYS			0	0		
STORAGES			1			
DISTANCE TRAVELLED (Feet)			56 ft			

DETAILS OF (PRESENT / PROPOSED) METHOD	OPERATION	TRANSPORTATION	INSPECTION	DELAY	STORAGE	DISTANCE IN FEET	QUANTITY	TIME	ANALYSIS WHY? WHAT? WHEN? WHERE? WHO? HOW?	NOTES	ANALYSIS CHNGE: ELIMINATE COMBINE SEQUENCE PLACE PERSON IMPROVE
1 Remove lumber from storage	●						1	3			
2 Transport to saw table		●				18	1	5			
3 Position for plumb cut	●						1	2			
4 Make plumb cut			●				1	2			
5 Position for tail cut	●						1	2			
6 Make tail cut			●				1	2			
7 Trans to 2d saw		●				14	1	4		With 2 saws	
8 Position for seat cut	●						1	2		Control factor is	
9 Make seat cut			●				1	2		reduced from	
10 On conveyor belt to storage		●				24	1	6		12 sec to 8 sec	
11 Remove fr convey stack	●						1	3		because operations	
12 Rafter in storage.										run concurrently.	
13											
14										Production Rate =	
15										1 rafter each	
16										8 sec or	
17										16 sec/truss unit.	
18										Assume 70% eff	
19										work hour 50 min	
20										$\frac{60 \times 50 \times .70}{16} = \frac{2100}{16} =$	
21										131 Truss units/hr	

Figure 4-5. Flow process chart, cutting rafters

Example. In Figure 4-5 there are eight operations (details 1, 3 through 6, 8, 9, and 11) requiring a total of 18 seconds. Four operations (details 1, 8, 9, and 11) can be accomplished concurrently. Hence, details 3 through 6 are the only operations which cannot be accomplished concurrently. The analyst circles the time required for these operations on the flow process chart and establishes the control factor as 8 seconds per unit. This data is entered in the column under notes, and the production rate is calculated as shown. In addition to Figure 4-5, Figures 4-6 through 4-10, pages 4-12 through 4-16, show the plotting of the control factor and the resulting calculations of the production rate for each member of the truss (Figure 4-3, page 4-7).

NOTE: In some flow process charts, more than one series of operations may be taken as the control factor. For example, in Figure 4-6, steps 3 and 4 could be used as the control factor instead of steps 6 and 7 (encircled). None of the steps selected as the control factor can be those taking place concurrently, regardless of the sequence selected.

PROPORTIONING

In the flow process charts (sample work sheets in Figures 4-5 through 4-10), except for webs and hangers, the cutting rate (based on a 50-minute hour) varies for each member unit. To achieve balanced production of the several parts making up the final product (the truss), analyze the production rate of each part and establish the proportionate cutting time which, when allotted to each member, will result in a balanced production.

Production rate analysis. Table 4-2, page 4-17, shows such an analysis for balanced production of the member units required for 4,000 trusses. Since the cutting rates are based on the flow process charts for each member unit, the numbers in the cutting rate column (column C) remain constant. Likewise, the cutting ratios (column E) will remain constant for each member, no matter how many truss units are to be built.

Balanced production. Balanced production for any period of time can be determined from Table 4-2 as follows:

Example 1. How many rafter units should be produced to balance production for truss units in six 50-minute hours?

Step 1. Determine the number of production hours to be allotted for cutting rafters. The cutting period ratio (column E, Table 4-2) is 0.352. Therefore--

$$0.352 \times 6 = 2.112$$

Step 2. Determine the number of rafters to be cut. The cutting rate per 50-minute period (column C, Table 4-2) = 131.

$$131 \times 2.112 = 277 \text{ rafter units}$$

Check --

$$6 \times 46.1 = 277 \text{ truss units}$$

$$0.6 \times 461 = 277 \text{ truss units}$$

Example 2. With a crew of nine workers, how many man-hours are required for cutting the 277 rafter units computed in example 1 ?

$$\text{Man-hours} = \text{Cutting period ratio} \times \left[\frac{\text{number of 50-minute periods}}{5} \times 6\right] \times \text{crew size}$$

$$= 0.352 \times \left[\frac{6}{5} \times 6\right] \times 9 = 22.8 \text{ man-hours}$$

SITE LAYOUT - THE THIRD STEP

Once the components of the plant have been at least tentatively selected, prepare a layout to show the location of the various construction aids.

Principles. While each job has its own characteristic problems and plant requirements, principles which apply to all jobs include the following:

- Ensure that the layout of the site is balanced. Select equipment which can be

FLOW PROCESS CHART

NUMBER	PAGE NO.	NO. OF PAGES
J.0.000	1	1

PROCESS: Cutting Lower Chords

☐ MAN OR ☒ MATERIAL

CHART BEGINS: Lumber Storage

CHART ENDS: Parts Storage

CHARTED BY: CPT Behring

DATE: 2 July

ORGANIZATION: 477th Engr Const Bn

SUMMARY

ACTIONS	PRESENT NO.	PRESENT TIME	PROPOSED NO.	PROPOSED TIME	DIFFERENCE NO.	DIFFERENCE TIME
○ OPERATIONS			6	14		
⇨ TRANSPORTATIONS			3	16		
☐ INSPECTIONS			0	0		
D DELAYS			0	0		
▽ STORAGES			1	--		
DISTANCE TRAVELLED (Feet)			62 ft			

DETAILS OF ☐ PRESENT ☐ PROPOSED METHOD	OPERATION	TRANSPORTATION	INSPECTION	DELAY	STORAGE	DISTANCE IN FEET	QUANTITY	TIME	ANALYSIS WHY? WHAT?	WHEN?	WHERE?	WHO?	HOW?	NOTES	ANALYSIS ELIMINATE	COMBINE	CHNGE SEQUENCE	PLACE	PERSON	IMPROVE
1 Remove from lumber storage	○	⇨	☐	D	▽		1	3												
2 Trans to saw table	○	⇨	☐	D	▽	18	1	5												
3 Position for 1st cut	○	⇨	☐	D	▽		1	2												
4 Make 1st cut	●	⇨	☐	D	▽		1	2												
5 Trans to 2d saw	○	⇨	☐	D	▽	14	1	4												
6 Position for 2d cut	○	⇨	☐	D	▽		1	2												
7 Make 2d cut	●	⇨	☐	D	▽		1	2						With 2 saws						
8 On conveyor to parts storage	○	⇨	☐	D	▽	30	1	7						Control factor =						
9 Remove fr convey, stack	○	⇨	☐	D	▽		1	3						4 seconds per						
10 Chord in storage	○	⇨	☐	D	▽									Chord or 8 sec/						
11	○	⇨	☐	D	▽									Truss unit						
12	○	⇨	☐	D	▽									Eff. 70%						
13	○	⇨	☐	D	▽									Working hour 50 min						
14	○	⇨	☐	D	▽									$\frac{60 \times 50 \times .70}{8}$ =						
15	○	⇨	☐	D	▽									262 truss units						
16	○	⇨	☐	D	▽									per hour						
17	○	⇨	☐	D	▽															
18	○	⇨	☐	D	▽															
19	○	⇨	☐	D	▽															
20	○	⇨	☐	D	▽															
21	○	⇨	☐	D	▽															

Figure 4-6. Flow process chart, cutting lower chords

FLOW PROCESS CHART

NUMBER	PAGE NO.	NO. OF PAGES
J.0.XXXX	1	1

PROCESS: Cutting Webs

☐ MAN OR ☒ MATERIAL

CHART BEGINS: At Lumber Stack

CHART ENDS: Parts Storage

CHARTED BY: CPT Behring

DATE: 2 July

ORGANIZATION: 477th Engr Const Bn

SUMMARY

ACTIONS	PRESENT NO.	PRESENT TIME	PROPOSED NO.	PROPOSED TIME	DIFFERENCE NO.	DIFFERENCE TIME
OPERATIONS			6	15		
TRANSPORTATIONS			3	18		
INSPECTIONS			0	0		
DELAYS			0	0		
STORAGES			1			
DISTANCE TRAVELLED (Feet)			68 ft			

	DETAILS OF ☐ PRESENT ☐ PROPOSED METHOD	OPERATION	TRANSPORTATION	INSPECTION	DELAY	STORAGE	DISTANCE IN FEET	QUANTITY	TIME	ANALYSIS WHY? WHAT?	WHEN?	WHERE?	WHO?	HOW?	NOTES (Time in seconds.)	ANALYSIS CHNGE: ELIMINATE	COMBINE	SEQUENCE	PLACE	PERSON	IMPROVE
1	12' length 2"x4" fr stack	●						1	3						Two webs can be cut						
2	Transport to 1st saw		●				27	1	7						from one piece. In						
3	Position for 1st cut			●				1	2						the first four						
4	Make first cut	●						1	2						steps until the first						
5	Couple resulting 2 pcs & trans to 2d saw		●				14	2	4						cut is made treat as						
6	Position for 2d cut			●				2	3						single piece. After						
7	Make 2d cut	●						2	2						1st cut, handle the						
8	Place on conveyor & trans to storage*		●				9/45	2	7						two half sections to-						
9	Remove fr conveyor & stack			●				2	3						gether and make 2d						
10	Webs in storage				●										cut on these at						
11															same time.						
12															Eff. 70% wk hr 50 min						
13															Control factor 5 sec						
14															$\frac{.60 \times 50 \times .70}{5} = 420$						
15															truss units per hr.						
16																					
17	*Distances to storage																				
18	for bs are 9 ft																				
19	and 45 ft. Average																				
20	would be 27 ft.																				
21																					

Figure 4-7. Flow process chart, cutting webs

FLOW PROCESS CHART

NUMBER	PAGE NO.	NO. OF PAGES
J.0.000	1	1

PROCESS: Cutting Hangers

MAN OR [X] MATERIAL

CHART BEGINS: Lumber Storage

CHART ENDS: Parts Storage

CHARTED BY: CPT Behring

DATE: 2 July

ORGANIZATION: 477th Engr Const Bn

SUMMARY	PRESENT NO.	PRESENT TIME	PROPOSED NO.	PROPOSED TIME	DIFFERENCE NO.	DIFFERENCE TIME
OPERATIONS			10	31		
TRANSPORTATIONS			3	16		
INSPECTIONS			0	0		
DELAYS			1	0		
STORAGES						
DISTANCE TRAVELLED (Feet)			59 ft			

DETAILS OF [ ] PRESENT [ ] PROPOSED METHOD

	Operation	Transportation	Inspection	Delay	Storage	Distance in Feet	Quantity	Time	Analysis Why? What? When? Where? Who? How?	Notes (Time in seconds.)	Analysis: Eliminate	Combine	Change: Sequence	Place	Person	Improve
1 Remove length fr storage	○	⇨	□	D	▽			3		Like the web, one						
2 Trans to saw table	○	⇨	□	D	▽	15	1	5		length is sufficient						
3 Position for 1st st cut	○	⇨	□	D	▽		1	3		for 3 pcs. The 1st						
4 Make first cut	●	⇨	□	D	▽		1	2		& 2d cut made on the						
5 Position for 2d st cut	○	⇨	□	D	▽		1	3		first saw gives three						
6 Make 2d cut	●	⇨	□	D	▽		1	2		pcs. The three						
7 Trans 3 pcs to 2d saw	○	⇨	□	D	▽	14	3	4		pcs are then placed						
8 Position stack of 3 pcs for 1st cut	○	⇨	□	D	▽		3	4		together on the						
9 Make first cut	●	⇨	□	D	▽		3	3		second saw. The first						
10 Turn 3 pcs over and position for 2d cut	○	⇨	□	D	▽		3	5		cut is made on the						
11 Make 2d cut	●	⇨	□	D	▽		3	3		stack, stack is						
12 3 Pcs on conveyor to storage*	○	⇨	□	D	▽	24/36	3	7		turned and second						
13 Remove fr conveyor & stack	○	⇨	□	D	▽		3	3		cut made. This opn						
14 Hangers in storage	○	⇨	□	D	▽					results in 3 hangers.						
15	○	⇨	□	D	▽					Control factor = $\frac{15}{3}$						
16 *Distances to storage	○	⇨	□	D	▽					or sec/truss unit.						
17 for hangers are 24 ft	○	⇨	□	D	▽					Eff. 70% wk hr 50 min						
18 and 36 ft. Average	○	⇨	□	D	▽					production rate						
19 would be 30 ft.	○	⇨	□	D	▽					$\frac{60 \times 50 \times .70}{5} = 420$						
20	○	⇨	□	D	▽					Truss units/hr.						
21	○	⇨	□	D	▽											

Figure 4-8. Flow process chart, cutting hangers

FLOW PROCESS CHART

NUMBER	PAGE NO.	NO. OF PAGES
J.0.0000	1	1

PROCESS: Cutting Rafter Ties

☐ MAN OR ☒ MATERIAL

CHART BEGINS: Lumber Storage

CHART ENDS: Parts Storage

CHARTED BY: CPT Behring

DATE: 2 July

ORGANIZATION: 477th Engr Const Bn

SUMMARY	PRESENT NO.	PRESENT TIME	PROPOSED NO.	PROPOSED TIME	DIFFERENCE NO.	DIFFERENCE TIME
○ OPERATIONS			15	77		
⇨ TRANSPORTATIONS			5	21		
☐ INSPECTIONS			0	–		
D DELAYS			0	10		
▽ STORAGES			1	–		
DISTANCE TRAVELLED (Feet)			53 ft			

	DETAILS OF (PRESENT / PROPOSED) METHOD	OPERATION	TRANSPORTATION	INSPECTION	DELAY	STORAGE	DISTANCE IN FEET	QUANTITY	TIME	ANALYSIS WHY? WHAT?	WHEN?	WHERE?	WHO?	HOW?	NOTES (Time in seconds.)	ANALYSIS CHNGE: ELIMINATE	COMBINE	SEQUENCE	PLACE	PERSON	IMPROVE
1	Remove stock from lumber storage	○	⇨	☐	D	▽		1	3						Each length provides						
2	Transport to 1st saw	○	⇨	☐	D	▽	12	1	4						7 pcs. As each						
3	Position 6 times & make 6 cuts	●	⇨	☐	D	▽		1	30						length is cut all but						
4	Trans 7 pcs to & stack at 2d saw	○	⇨	☐	D	▽	14	7	10						two pcs are delayed						
5	Remove 2 pcs from stack and position for 1st cut	○	⇨	☐	D	▽		2	4						while two pieces						
6	Make 1st cut	●	⇨	☐	D	▽		2	3						are cut on the						
7	Turn 2 pcs over and position for 2d cut	○	⇨	☐	D	▽		2	4						2d saw. Inso-						
8	Make 2d cut	●	⇨	☐	D	▽		2	3						much as two pieces						
9	Position two more pcs for 1st cut	○	⇨	☐	D	▽		2	4						are cut at a time,						
10	Make 1st cut	●	⇨	☐	D	▽		2	3						calculation will be						
11	Turn 2 pcs over and position for 2d cut	○	⇨	☐	D	▽		2	4						based on cutting 6						
12	Make 2d cut	●	⇨	☐	D	▽		2	3						pcs. The last cycle						
13	Position two more pcs for 1st cut	○	⇨	☐	D	▽		2	4						will cut only 4						
14	Make 1st cut	●	⇨	☐	D	▽		2	3						pcs.						
15	Turn over and position for 2d cut	○	⇨	☐	D	▽		2	4						Control Factor						
16	Make 2d cut	●	⇨	☐	D	▽		2	3						$\frac{42}{6}$ = 7 secs/truss						
17	Last 2 pcs on conveyor* to storage	○	⇨	☐	D	▽	15/39	2	7						Eff 70% wk hr 50 min						
18	Remove fr conveyor stack	○	⇨	☐	D	▽			2						$\frac{60 \times 50 \times .70}{7}$ = 300						
19	Collar ties in storage	○	⇨	☐	D	▽									Truss units/hr						
20	*Distances to storage for rafter ties 15 ft and 39 ft	○	⇨	☐	D	▽															
21	Average 27 ft	○	⇨	☐	D	▽															

Figure 4-9. Flow process chart, cutting rafter ties

FLOW PROCESS CHART

NUMBER	PAGE NO.	NO. OF PAGES
J.0.000	1	1

PROCESS: Cutting Lower Chord Splices

☐ MAN OR ☒ MATERIAL

CHART BEGINS: Lumber Storage

CHART ENDS: Parts Storage

CHARTED BY: CPT Behring

DATE: 2 July

ORGANIZATION: 477th Engr Const Bn

SUMMARY	PRESENT NO.	PRESENT TIME	PROPOSED NO.	PROPOSED TIME	DIFFERENCE NO.	DIFFERENCE TIME
○ OPERATIONS			8	26		
⇨ TRANSPORTATIONS			2	11		
☐ INSPECTIONS			0	-		
D DELAYS			0	-		
▽ STORAGES			1	-		
DISTANCE TRAVELLED (Feet)			42 ft			

DETAILS OF ☐ PRESENT ☐ PROPOSED METHOD	OPERATION	TRANSPORTATION	INSPECTION	DELAY	STORAGE	DISTANCE IN FEET	QUANTITY	TIME	ANALYSIS WHY? WHAT?	WHEN?	WHERE?	WHO?	HOW?	NOTES (Time in seconds.)	ANALYSIS CHNGE ELIMINATE	COMBINE	SEQUENCE	PLACE	PERSON	IMPROVE
1 Remove length from storage	●	⇨	☐	D	▽			4						Each length provides						
2 Trans to 2d saw	●	⇨	☐	D	▽	12	1	4						4 splices - 3 cuts						
3 Position for 1st cut	●	⇨	☐	D	▽		1	3						must be made on each						
4 Make 1st cut	●	⇨	☐	D	▽		1	3						length.						
5 Position for 2d cut	●	⇨	☐	D	▽		1	3												
6 Make 2d cut	●	⇨	☐	D	▽		1	3						Control factor						
7 Position for 3d cut	●	⇨	☐	D	▽		1	3						$\frac{18}{4}$ = 4.5 sec/truss unit						
8 Make 3d cut	●	⇨	☐	D	▽		1	3						Eff. 70% wk hr 50 Min						
9 2 pcs on conveyor to storage	●	⇨	☐	D	▽	18/42	2	7						$\frac{60 \times 50 \times 70}{4.5}$ = 467						
10 Remove fr conveyor and stack	●	⇨	☐	D	▽		2	4						Truss units per hour.						
11 Chord splice in storage	●	⇨	☐	D	▽															
12	●	⇨	☐	D	▽															
13 *Distances to storage	●	⇨	☐	D	▽															
14 for splices are 18 ft	●	⇨	☐	D	▽															
15 and 42 ft. Average	●	⇨	☐	D	▽															
16 would be 30 ft.	●	⇨	☐	D	▽															
17	●	⇨	☐	D	▽															
18	●	⇨	☐	D	▽															
19	●	⇨	☐	D	▽															
20	●	⇨	☐	D	▽															
21	●	⇨	☐	D	▽															

Figure 4-10. Flow process chart, cutting lower chord splices

Table 4-2. Production analysis

(Cutting times from flow process charts, Figures 4-5 through 4-10)

(A)	(B)	(C)[1]	(D)	(E)[2]	(F)	(G)
Member	**Required number of truss units**	**Cutting rate per 50-minute period**	**Total number of 50-minute periods required (B/C)**	**Cutting period ratio**	**Number of 50-minute periods allotted for the 10-hour workday (10xE)**	**Balanced production total truss units cut in 10-hour workday (FxC)**
Rafter	4,000[3]	131	30.5	0.352	3.52	461
Lower chord	4,000[3]	262	15.3	0.176	1.76	461
Web	4,000[3]	420	9.5	0.110	1.10	461
Hanger	4,000	420	9.5	0.110	1.10	461
Rafter tie	4,000	300	13.3	0.153	1.53	461
Lower chord splice	4,000	467	8.6	0.099	0.99	461
Total			86.7	1.000	10.00	

[1]Quantities are derived from rates computed in Figures 4-5 through 4-10. All of these simple process charts reflect the actual production time required to cut each member unit; that is, production time equals 50 minutes/hour.

Production hour = {man-hours/6} x 5

Man-hours = {number of 50-minute periods/5} x 6

[2]Cutting period ratio = member cutting time (column D)/total periods (column D)

The above ratio is used to determine the relative cutting periods of one member to another in order to maintain balanced production. Summary of cutting operations:

Unit cutting rate = {4,000/86.7} x 46.1

Number of truss units/day = 10 x 46.1 = 461

Number of days required = {86.7/10} = 8.67

Check: 8.67 days x 461 truss units/day = 4,000 total truss units

Number of man-hours for 9-member crew = 9 x 10 x 8.67 = 780

[3]These numbers represent pairs of members.

used at its maximum capacity at all times.

- Place stockpiles of materials as close as possible to the place of final use. Where storage space is limited, place the heaviest or most unwieldy materials closest to the point of use to reduce handling.
- Design the material delivery schedule to eliminate as much on-the-job storage as possible. On-the-job storage diverts considerable effort from the main job, increases the job area, and necessitates rehandling.
- Locate general utility equipment, such as cranes and air compressors, to serve as large an area as possible to keep movement of such equipment to a minimum.
- Locate mixers, hatchers, power saws, crushing and screening plates, and similar facilities to keep materials handling to a minimum.
- Maintain supplies of petroleum, oil and lubricants; water; hand tools; and equipment repair parts at realistic levels.
- Avoid traffic congestion by using one-way roads or turnarounds.
- Arrange material flow so that it may be helped by gravity, where possible.
- Provide medical facilities. They may range from single first-aid kits on a small job to a complete aid station with trained aid personnel available at all times on a large project.
- Provide safety measures for the prevention of injuries when planning the layout. These may include dust alleviation and such items as protective equipment and lighting for night work.
- Provide fire prevention and protection, particularly during dry or cold weather.

Preparation. In the development of an efficient system for processing materials through the plant, it is very unlikely that the first layout will meet all requirements. Several layouts may be prepared at this stage, only to be discarded as new complications become apparent. The use of graph paper will permit rapid freehand sketching roughly to scale so that time spent in this effort will be held to a minimum. Time conscientiously expended in layout preparation will prevent the loss of valuable man-hours later at the job site.

Trial layouts. When making a site layout, plan the whole and then work at the details. When planning the processes, keep in mind the available equipment. Once the processes are established, make trial site layouts on scaled paper to determine how to perform the processes most efficiently. Many typical layouts may be found in references dealing with particular operations such as rock crushing and central mixing. These serve as excellent starting points for a detailed analysis of a specific project. Sample layouts of this type are shown in Appendix D.

First layout. Layout sketch number 1 in Figure 4-11, the first attempt in this particular problem, does have possibilities. However, it is apparent that either all cutting operations must be completed before starting assembly of trusses, or the trailer-mounted saws will have to be moved frequently in order to maintain a balance of cut parts available for assembly.

Second layout. A second layout, given in Figure 4-12, is more feasible. The location of materials and the distances coincide with cutting operations as outlined in the process charts (Figures 4-5 through 4-10, pages 4-10 through 4-16). Up to this point, the layout seems satisfactory. However, in developing a process of assembling the trusses to be approximately equal to the cutting rate, you will see that parts storage and assembly facilities are not realistic.

Third layout. Layout number 3 (Figure 4-13, page 4-20) now appears to be a workable

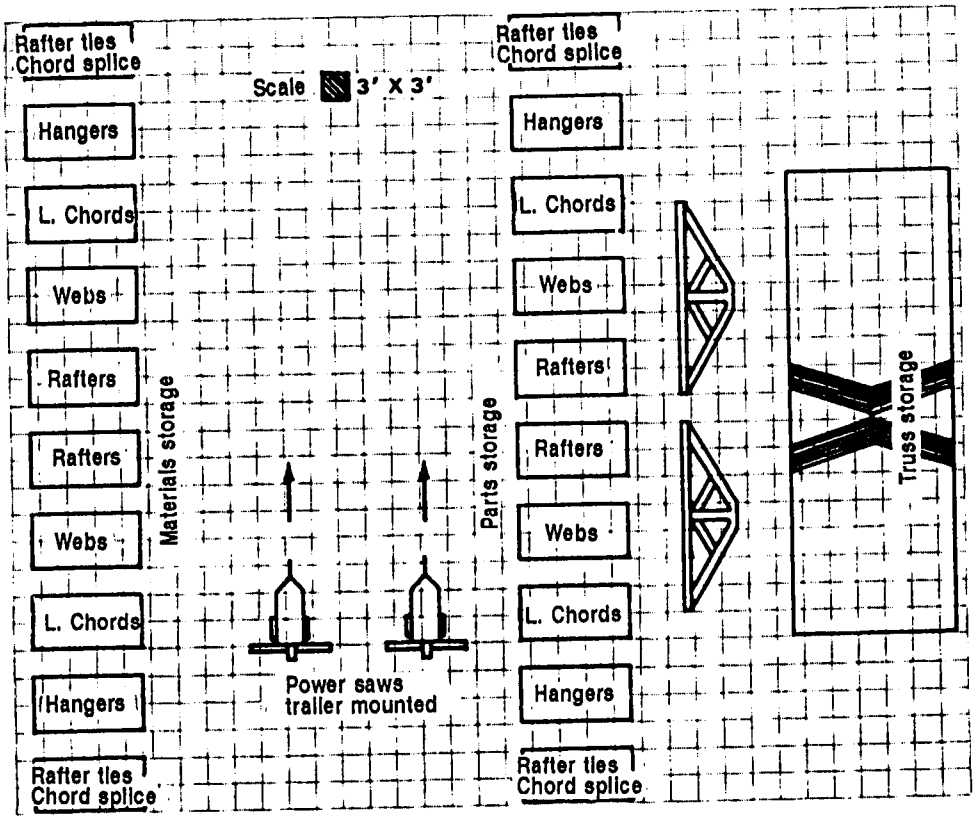

Figure 4-11. Layout sketch number 1 (trial method)

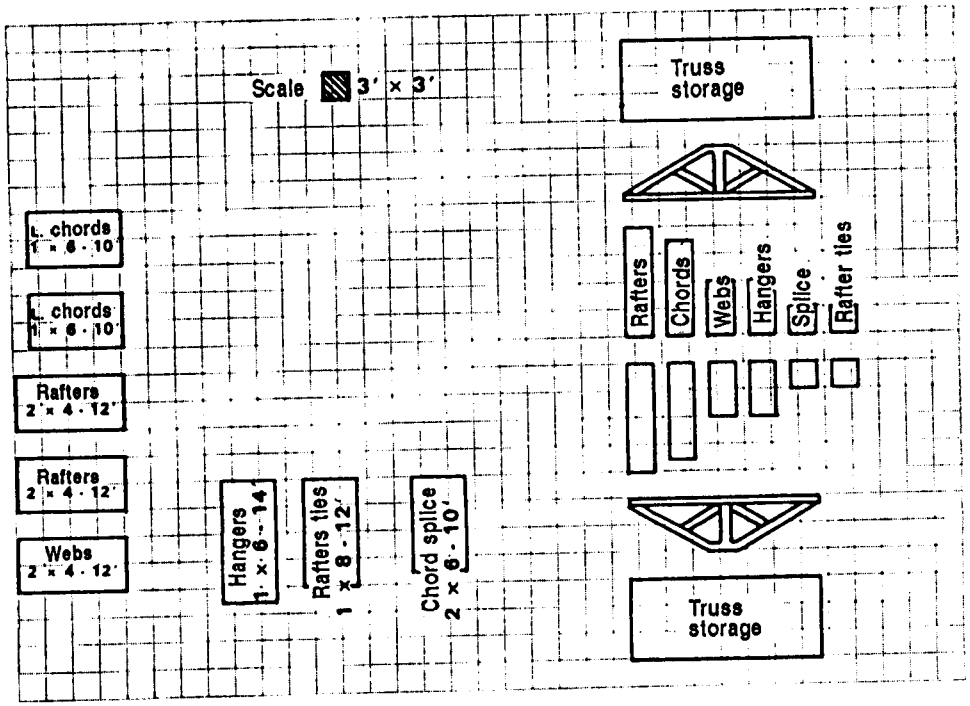

Figure 4-12. Layout sketch number 2 (trial method)

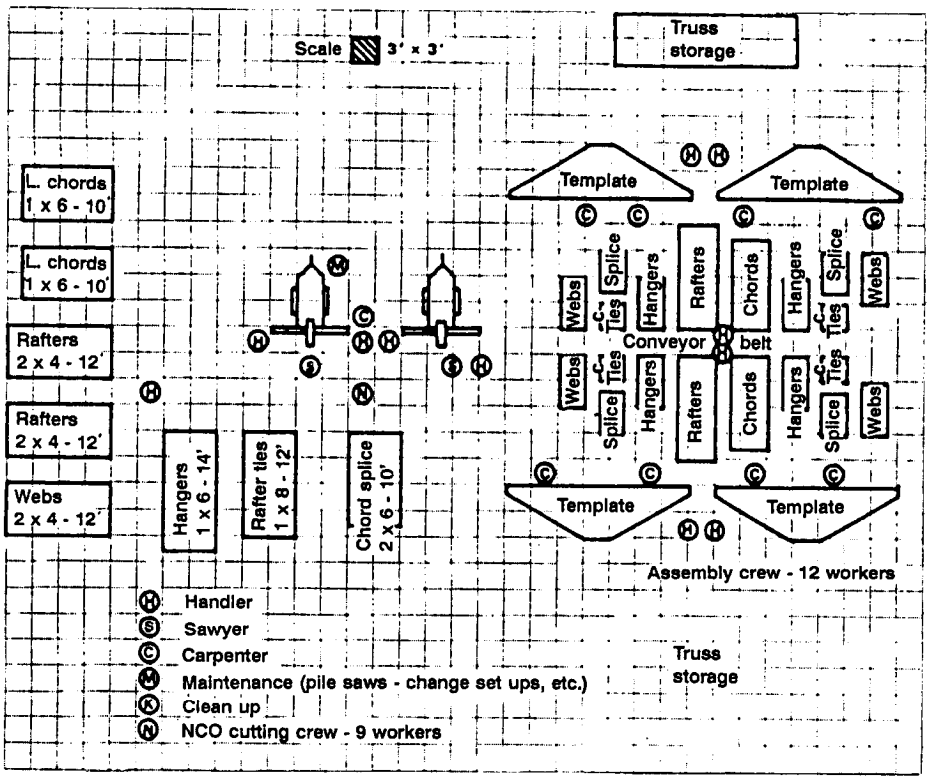

Figure 4-13. Layout sketch number 3 (trial method)

layout because it reflects the flow process charts (Figures 4-5 through 4-10, pages 4-10 through 4- 16). From the planner's viewpoint, there is both a layout and a processing system which will produce roof trusses according to the estimate. Of equal importance is the fact that no time will be lost in setting up the fabrication yard. Supervisory personnel in the field will know exactly what is intended. Every detail developed by the planner is on paper in legible form for them to execute.

Assembly phase. An analysis similar to the one presented here may be conducted for the assembly phase of the truss fabrication. One analysis using a crew of 12 workers yields a unit assembly rate of 46.64. This means that 4,000/46.64 = 85.8 hours (or 8.58 days of 10-hour days) will be required for assembly with the specified 12-worker crew. This yields a total of 1,030 man-hours.

CONCLUSION

If this method of analyzing site layout requirements appears to be too detailed and time-consuming, consider the usual method and then compare the merits of each.

Usual method. In the detailed planning stage, the estimators develop figures that show the rates of production that should be accomplished as well as the overall time required to perform each item of work. However, even though such an estimate contains the backup calculations that result in the final figures, rarely can anyone other than the estimator who compiled it determine the factors upon which the figures are based. Needless to say, when the site is to be laid out and the production process set up, no plan exists. The individual charged with supervision is expected to set up the site and accomplish the task with the rates of production derived by the estimator.

However, without knowing the determining factors for the figures, the supervisor can rely only on technical knowledge and experience. The inevitable result is confusion when the job is getting under way and a double-shift operation in the latter stages in an effort to meet deadlines.

Flow process chart method. Use of the flow process chart establishes a definite sequence of operations that reduces the overall process to a minimum number of operations, movements, and delays. On the flow process chart we determine what takes place.

Established critera. The flow process charts provide a means of analyzing each operation and movement of materials to determine how, where, and when each operation is performed. Criteria are established for simultaneous development of the layout plan.

Visible data. All data is visible, easily interpreted, and available for viewing by others to see whether, based on experience, further improvements can be developed before placing the plan into operation. When ready to execute, orders can be issued with confidence because the supervisor knows that operations will be set up exactly as visualized by the estimator.

Future referernce. Furthermore, the data provides a basis for developing and recording further improvements once the job is under way. After the job is completed, there is factual recorded data to be filed for reference in planning future jobs of a similar nature.

Problem. In this chapter the location of the fabrication yard is considered to have been fixed. There is a requirement for 4,000 20-foot trusses for standard TO buildings (Figure 4-3, page 4-7). The problem is to determine the following

- Layout of fabrication yard.
- Size of labor crew required.
- Distribution of labor to ensure efficient production.
- Man-hours required to produce each truss unit.
- Total production time required.

Solution.

- The layout of the fabrication yard is given in the layout sketch shown in Figure 4-13. The assembly phase paragraph explains that it is a workable layout because it includes all operations outlined in the flow process charts (Figures 4-5 through 4-10, pages 4-10 through 4-16).
- The layout sketch also shows the size of the labor crew required: one cutting crew of nine workers, four assembly crews of three workers each.
- Layout sketch number 3 (Figure 4- 13) shows a distribution of labor for effective cutting and assembling.
- Man-hours required to produce each truss are 0.195 for cutting and 0.258 for assembly.
- The total time required is 9.08 days.

CONTROLLING FUNCTIONS

CHAPTER 5

SUPERVISION

STEPS

Supervision is the direction and control of subordinates; that is, telling people what to do, then making sure they do it. There are three steps in the supervision process.

Step 1. Set objective standards. The key word in this step is "objective." The standard which is set must mean the same to both subordinates and supervisor, In construction, standards of percentage completion are often vague. For example, if a unit was directed to have the construction of six concrete slabs 50 percent complete by a certain date, should it have three slabs complete or forms set for all six? This problem can be avoided by directing the unit to complete specific activities in a detailed CPM network.

Step 2. Measure performance. Performance can be measured either by inspection or by report. These control devices will be further discussed,

Step 3. Make adjustments. If performance does not meet standards, adjustments can be made in two ways: either improve performance or lower standards. Generally, improving performance is appropriate. At times, however, the supervisor may face a situation where the standard becomes unrealistic; for example, a schedule is based on poor estimates or fails to reflect delays. In these cases, the supervisor must be able to adjust the schedule or be given additional resources.

COMMUNICATIONS

The essence of good supervision is good communications. Objective standards cannot be set when orders are not communicated clearly. Performance cannot be measured when the communications system does not allow for timely reports. Adjustments cannot be made unless there is provision in communications for feedback. Communications may be oral or written. Each method has inherent advantages and disadvantages.

Written communications. Written communications for supervision include communications devices designed for a downward flow of orders from supervisor to subordinate, such as regulations, SOPS, directives, and policy memoranda, and a communications device for upward flow of information from subordinate to supervisor in the form of reports. The downward communications devices used for supervision do not have as their purpose the dissemination of information. Regulations, SOPS, directives, and policy memoranda are designed to tell people what to do, not to inform. Any information contained in these directive communications should be necessary for the clarification of the order. Information of a general nature can be transmitted through other communications devices such as manuals, circulars, or bulletins. Thus, regulations, SOPs, directives, and policy memoranda should be written to accomplish the first step in the supervision process, the setting of objective standards. Similarly, the upward-flow communications device, the supervisory report, has as its function the accomplishment of the second supervision step,

measuring performance against standards. The supervisory report, then, must correspond with an order. Performance cannot be measured against a standard which has not been set; nor should a standard be set if there is no mechanism to verify enforcement.

Advantages. Written communications provide a record of both standards and performance. This record is useful for both continuity and later reference. Some advantages of written communication are--

- A high level of accuracy, uniformity, and completeness. Written directives can be prepared meticulously so that all details are spelled out. Even if extreme care is taken in the preparation of a briefing, the subordinate does not have the briefing to refer to as he does a written directive. Plans and specifications are examples of standards which must be transmitted to paper to ensure accuracy. Reports which must be consolidated at higher headquarters are often written to ensure uniformity.
- Time savings. When a directive applies to many subordinates, often time can be saved by sending a written directive rather than by attempting to reach each subordinate individually or in special meetings.

Disadvantages. When a regulation, SOP, directive, or policy memorandum is sent down through several levels of command, there is a time lag in implementation, a time lag in performance measurement, and a further time lag in performance-standard adjustments. This may result in inappropriate standards being established and maintained by higher headquarters. Some disadvantages of written communication are--

- A large amount of administrative effort. Written communications must be drafted, reviewed, printed, distributed, and filed. All of this requires a great deal of clerical support.
- Inflexibility. It is difficult to change a regulation, SOP, directive, or policy memorandum in the face of changing circumstances. This is particularly true if the order has come from several command levels above the working unit.

Oral communications. Oral communications include inspections, conferences, and briefings. These are two-way communications devices because with face-to-face contact there is always the opportunity to exchange information, Just as with written communications, oral communications for supervision should accomplish the three supervision steps listed on page 5-1.

Immediate feedback. The third step in the supervision process is to make adjustments when performance does not meet standards. This step is greatly simplified by oral communications. Often, through questions or discussion, either the performance or the standards can be adjusted immediately.

Little administration effort. Oral transmission of information on standards and performance saves clerical effort. A supervisor may stress oral communications in cases where administrative support is not available.

Flexibility. In an inspection, conference, or briefing, the face-to-face contact between the supervisor and subordinate makes possible a quick response to changing circumstances. Further, with oral communications, no long process is needed to change a previous decision.

Written versus oral communications. Generally, written communications are overused. Too many regulations are written with limited applicability. SOPs are written for procedures which should be left to the discretion of subordinates. Reports may be submitted long after their usefulness has ended. At each level of command, written supervisory communications should be examined at least every six months to determine which regulations, SOPs, directives, policy memoranda, and reports are obsolete and which would be better suited for oral communications.

INSPECTIONS AND REPORTS

INSPECTIONS

The inspection is a control device which gives the commander first-hand knowledge of a situation and provides immediate feedback. An Army proverb states that "a unit does well what the commander inspects." The most effective way of ensuring that vital functions are not neglected is through a system of inspections. Because they *are* time-consuming and time is the supervisor's most precious resource, inspections should be carefully planned to accomplish a definite purpose.

Types. *Announced inspections* are used to bring the unit up to a specified performance level by the inspection date. Unannounced inspections are used to measure the unit's normal performance. Announced inspections are best suited for control of one-time-only activities, such as the inspection of a building before turnover or the inspection of a new property book. Unannounced inspections are best suited for control of continual tasks or procedures such as maintenance or the utilization of workers on a job.

Uses. Both types of inspections are important to the construction supervisor. For example, if a unit is responsible for construction of a fixed bridge, the commander might announce an inspection to check placement of the piers and abutments, while inspections to ensure that safety procedures are being followed would not be announced in advance.

DELEGATION OF INSPECTION AUTHORITY

Inspection is intended to keep the commander informed and to teach, guide, and compel things to happen as planned. Where someone other than the commander is delegated the task of inspecting, instructions must be issued by the commander as to the authority of the inspecting party. These instructions must define if the inspecting party can require work to be done according to specifications and plans and/or if they can issue stop orders.

Although no formal inspection organization is found in an engineer company, the commander must select personnel for training as inspectors. The work force in the company is usually spread thinly, and trained inspectors are not usually available. Since a thinly spread force is very difficult to control, a commander who spends most of the time making personal inspections will not be able to devote enough time to other functions of command. For these reasons, training of inspectors should be a priority item.

INSPECTION OBJECTIVES

At the construction site, the supervisor should inspect performance in the following categories (see Figure 5-1, page 5-4):

Construction.

Progress (as scheduled). Compare construction progress with the CPM schedule. Are critical activities on schedule? Are delays in noncritical activities likely to cause a project delay?

Conformance (as specfied). Does construction conform to the plans and specifications? Has drainage been provided for? Is there evidence of substandard workmanship?

Utilization of resources.

Personnel. Does the commander or platoon leader know who is on the site? Are absentees accounted for? Does the commander know what each person is doing? Is everyone working or on authorized break? (In order to decide this, the inspector must know the authorized break times.) Are the skills of the workers being utilized to the maximum extent? Are the on-the-job trainees being adequately supervised?

Equipment. Is the equipment on-site necessary for transportation or construction? Are there qualified equipment operators on-site and are they using equipment efficiently?

Categories	Yes	No*	Remarks
Construction:			
AS SCHEDULED:			
1. Critical activities on schedule?			
2. Noncritical tasks accomplished by late finish?			
AS SPECIFIED:			
1. Conform to plans/specifications?			
2. Adequate drainage?			
3. Quality workmanship?			
Utilization of resources:			
WORKERS:			
1. Can commander account for all workers?			
2. Do key NCOs and workers have knowledge of their tasks?			
3. Are workers working or on authorized break?			
4. Maximum utilization of skills?			
5. Adequate supervision of OJTs?			
EQUIPMENT:			
1. Equipment necessary?			
2. Qualified operators present?			
3. Operators using equipment efficiently?			
4. Equipment located efficiently?			
5. Sufficient equipment on site?			
MATERIALS:			
1. Sufficient materials on site?			
2. Arrangement for future deliveries?			
3. Minimal materials handling?			
4. Proper storage?			
5. Minimum waste?			
Maintenance:			
EQUIPMENT:			
1. Current maintenance forms?			
2. Operator maintenance spot checks OK?			
TOOLS:			
1. Assignment of responsibility?			
2. Free from damage and rust?			
3. Used as intended?			
Health and welfare:			
SAFETY:			
1. Hardhat area set up and enforced?			
2. Safety lines?			
3. Insulation and grounding of electrical circuitry?			
4. Sharp instruments or obstacles policed?			
5. Use of earplugs around loud equipment?			
6. Backing guides?			
7. First-aid kit?			
8. Adherence to other safety SOPs?			

*Any check in the No column must be explained in Remarks.

Figure 5-1. Inspection checklist

Categories	Yes	No*	Remarks
KNOWLEDGE OF TACTICAL SITUATION:			
1. Friendly?			
2. Enemy?			
TRANSPORTATION:			
1. Emergency?			
2. Adequate to and from site?			
3. Suitable for inclement weather?			
DINING FACILITIES:			
1. Warm, clean, sheltered dining area?			
2. Officers and NCOs eat on site?			
3. Good quantity and quality of food?			
LATRINES: (Clean latrines away from dining area?)			
Police. (Satisfactory area police?)			
Other inspection checkpoints (lists):			

*Any check in the No column must be explained in Remarks.

Figure 5-1. Inspection checklist (continued)

Is the equipment placed efficiently for construction? Is sufficient equipment on-site ready for work? (Appendix E lists equipment and tools needed for the various tasks in the construction process).

Materials. Are materials on-site for the day's work? (Appendix F lists consumption factors for expendable supplies.) Have deliveries of material been arranged for future work? Is materials handling being minimized? Are materials being stored properly to prevent damage or loss? Does the scrap pile indicate excess waste?

Maintenance.

Equipment. Does each equipment logbook have the necessary maintenance forms current and properly filled out? Perform one or two operator maintenance checks as outlined in the appropriate TM.

Tools. Has the noncommissioned officer in charge (NCOIC) assigned responsibility for the security, care, and maintenance of all tools? Are the tools damaged or rusty? Does the NCOIC know the procedures for replacing broken tools? Are tools being used as intended? (Pliers are not hammers or wrenches; ripsaws should not be used for crosscuts.) Are all tools under proper, consistent accountability?

Health and welfare.

Safety. In vertical construction, has the NCOIC designated a hard-hat area? Are hard-hat rules being enforced? Are men who work on poles, elevated trusses, or frames wearing safety lines? Is electrical circuitry properly insulated and grounded? Are earplugs used around compressors and other noisy equipment? Are backing guides used to block vehicles? Is there a first-aid kit on site? Are other safety SOPS being enforced? Are safety shoes used in appropriate work areas?

Tactical situation. Do all personnel know their actions in case of enemy indirect fire or ground attack?

Transportation. Is emergency transportation from the site immediately available? Is

there adequate transportation to and from the site? Is this transportation suitable for inclement weather?

Dining facilities. Is a warm, clean, sheltered dining area provided? Do the officers and NCOs on the job eat there? Is the quality and quantity of food as good as or better than the food in the base camp dining facilities? (To answer this question, you must eat there.)

Latrines. Are latrines clean, adequate in number and design, and away from the dining area?

Area Police. Is the site maintained orderly and policed in a manner that helps rather than hinders efficient work progress?

REPORTS

The commander has limited time and cannot make all the inspections needed to ensure effective control, Therefore, reports must be used to supplement personal inspections. The advantage of supplementing inspections with reports is the time saved. The disadvantage is that the commander must see the situation through another's viewpoint.

Reporting system. A good reporting system provides a continuous flow of valuable information to the commander at considerable time savings. A bad reporting system supplies the commander with excess information or misinformation and wastes everyone's time. The following are guidelines for achieving a good reporting system:

Design. Design the reporting system around the commander's needs. Different levels of command have different needs. The same commander has different reporting needs at different times. Since needs change with time and from one command to another, reports also must change.

Frequency. The frequency of reports must correspond to the frequency of meaningful changes in the situation. A daily report is meaningless on a situation which changes only monthly or yearly. Reports which contain the same information day after day or week after week are wasted reports. On the other hand, reports must be timely so that the commander can act in time. A meaningful change should be reported promptly whether a report is due or not.

Purpose. Reports are a control device, a system of measurement, not a means of setting standards or policy. Many supervisors think they can force things to happen by forcing their subordinates to report on them. A quarterly report on maintenance does not compel good maintenance; a daily safety report does not guarantee safety. A report which is used to generate "awareness" is a poor substitute for leadership.

Specificity. Since the commander must see the situation through another's eyes, this disadvantage can be largely overcome by a carefully designed, factual, report format. Allowing a subordinate to report percentage completion may give the subordinate wide latitude for interpretation. Making the subordinate report detailed tasks which are completed narrows this latitude considerably. Reports of equipment and man-hour utilization should have specific guidelines so that the subordinate knows how to record each man-hour or equipment hour.

Verification. The commander must make inspections to verify reports. Although the amount of bias in reports can be greatly reduced by setting up an objective reporting system, even the most objective system leaves room for interpretation or even misrepresentation of the facts. A good reporting system may supplement inspection, but reports cannot replace inspections. There is no substitute for direct control.

Report types. Reports can be designed to control a wide range of performance. Production reports control plant operations such as quarries, asphalt plants, or prefabrication yards. These reports list production inputs (materials, personnel, and equipment hours) and quantities of output over a specific time period. Project costs are controlled by budget reports. Budget reports

compare actual to planned expenditures.

The most common report in construction is the schedule, which compares actual construction time and resource commitments to planned progress.

SUPERVISION OF INDIGENOUS PERSONNEL

UTILIZATION

Almost all units, from logistics commands to combat units, can be aided by the utilization of indigenous (local) personnel. The engineer construction unit especially can benefit from the help of local labor. Skilled local tradesmen have experience that the construction unit may not have in working with the area's available materials. Local personnel can also help the engineers with such less skilled tasks as materials transport and apprentice work.

LOCAL SUPERVISORS

The use of local supervisors as first-line managers is important to the successful accomplishment of projects employing local labor. Using capable local personnel as supervisors facilitates control, but great care must be taken in the selection of these supervisors. A poor choice can negate the usefulness of a civic-action project or make further construction operations with local personnel impossible. In any project using local labor, Army managers should remain as inconspicuous as possible.

CONSIDERATIONS

Construction projects involving local personnel must be coordinated with the local government and with other US agencies. Wage rates must be set high enough to attract the workers but not so high that the local economy will be thrown into turmoil. If the construction is part of a civic-action program, the engineer unit must ensure that the project will fit in with local and US agency planning.

Commitment of US labor and equipment. The availability of US labor and equipment to support the project must be examined in the light of changing operational requirements. Often, commitments of US resources are not "necessities." Local supervisors can often find alternative ways of accomplishing tasks without the commitment of US equipment or skills.

Capabilities of local labor. The materials and technology of the project must be matched to the capabilities of the local force. Failure to consider this in project planning will lead either to projects that are too simple or projects that do not correspond to the construction and maintenance abilities of the population. Maximum use should be made of local materials and skills.

Length of projects. If possible, large projects should be constructed by breaking them down into smaller, usable subelements, even if this method of construction results in greater overall effort being expended. Short-duration projects also provide a degree of protection against unforeseen operational requirements. In civic action, the early completion of a project provides visible proof to the citizenry that joint efforts with US units can produce improvements in local living conditions.

CIVIC-ACTION PROJECTS

Civic-action projects should be designed for maximum community involvement. The need for the projects should be determined by the local leadership. The design should be produced by the community when possible and should always be approved by the community. The construction should be accomplished by local laborers. The role of the engineer unit should be one of technical assistance, materials support, and the occasional commitment of engineer equipment. A civic-action project should have the following characteristics:

Maintenance. With any civic-action project, a system should beset up during the project planning stage for the maintenance of the project when it is completed. This is particularly important for horizontal construction projects or for equipment transfers.

Development of local skills. The ultimate goal of civic-action projects should be to increase the skill and self-reliance of the civilian population. Although individual projects should be within local capabilities, they should also teach additional skills.

Stimulation of additional projects. In keeping with the building-block aspect of skill development, civic-action projects should stimulate further projects. A construction materials plant (brick, lumber) is one example of a base project upon which other projects can be built.

QUALITY CONTROL

REQUIREMENT

Construction quality control in the TO is the responsibility of the project supervisor. Quality control includes planning, designing, and monitoring the construction process to achieve a desired end result. During the planning phase, control is achieved by the proper application of network analysis (CPM), scheduling, and estimating. Designing a project for quality involves choosing the proper configuration, material, equipment, and personnel to achieve the construction. The construction monitoring steps require adherence to standard construction procedures, established supervision practices, and accepted testing methods. Quality control in military construction is needed for many reasons. The basic objective of quality control, however, is to provide a safe, functional, and enduring project with an acceptable appearance.

GUIDANCE

The supervisor must know and apply standard practices to provide guidance to adequately control the various operations involved. Since military construction operations are varied and detailed, this manual describes only general quality control measures. The following paragraphs provide supervisors with examples for developing and using control measures on specific construction projects.

LUMBER

Different types of timber have varying construction and carpentry characteristics. One type is often better suited for a particular job than another. Lumber type and size are usually stated in the construction plan. For more detailed information, consult the appropriate carpentry manual.

Joints. Scan all connections at angles for proper and smooth fit. Check right-angle joints for accuracy with a carpenter's square. End-grain sections are critical and should be examined for splits. Generally, eightpenny or tenpenny nails are used for all types of joints.

Splices. Lumber construction with splices must be as strong as a single timber of equivalent length. To ensure adequate strength, analyze the types of stress on linear connections (Figure 5-2). Compression stress may be neutralized by butt and halved splices. Square and plain splices benefit members in tension. Connections subject to bending moments are controlled with combinations of tensile and compressional splices. Check splices to be sure that stresses are counteracted by correct splice type.

Fasteners. There are six different classes of fasteners in timber construction— nails, screws, bolts, driftpins, corrugated fasteners, and timber connectors. Nails should be driven at a slight angle for utmost strength. As a rule, the nail should be

embedded two-thirds of its length through the piece to be fastened and one-third through the anchoring member. Check construction for adequate nail usage. All screws should be emplaced using starter holes that are less than the diameter of the screw and approximately two-thirds its length. Washers should be used in construction with bolts because without protective washers, overtightened bolts can damage the lumber's surface.

Foundations. Wooden piers or columns should be treated with a protective coating to guard against decay. Check piers for 6- to 10-foot spacing. When the piers extend 3 feet above the ground, use bracing (Figure 5-3).

Framing. Pier connections should have sill reinforcement consisting of single heavy timbers or of two or more timbers. The strength of the girders relates directly to the square of the span length. If two spans are used, one twice the length of the other, the girder for the longer span should be four times stronger than the other. Nail sizes for two-member girders are sixteen-penny; for four-member girders, twenty-penny or thirty-penny. Nails are driven 1/2 inch from the top and bottom with spacing of 24 inches. Girders should be tested (for trueness) with a straightedge.

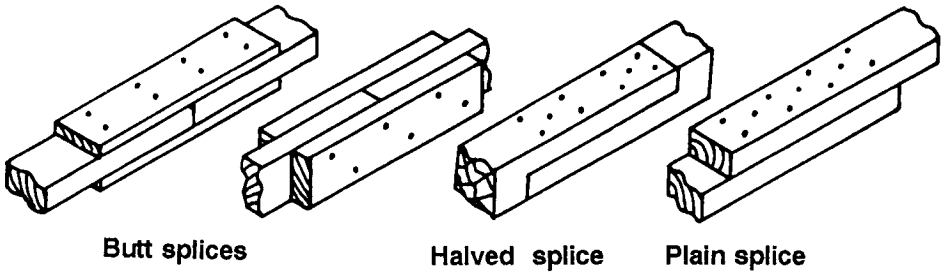

Figure 5-2. Compression, tension, and bending splices

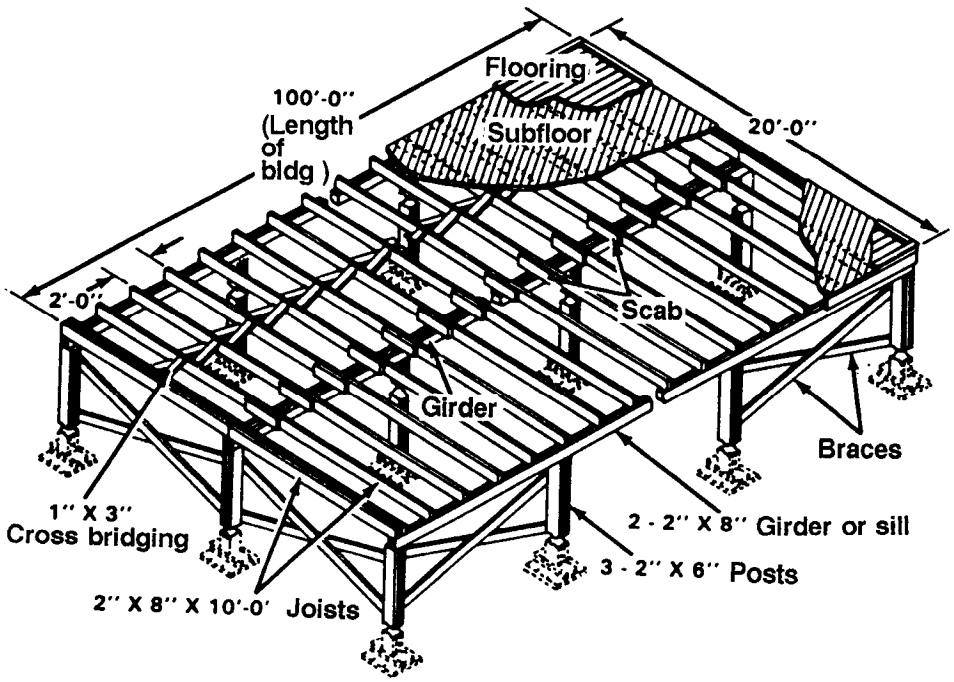

Figure 5-3. Braced piers, sills, girders, and joist construction

All girder joints should be staggered for strength and durability (Figure 5-4).

Floor joists. Floor spans over 10 feet require joists of 2 inches by 8 inches or greater. Usually, joists are 2 or 3 inches thick. Joist depth is restricted by load conditions. Check the spacing interval to be sure it is no greater than 24 inches center-to-center. In connecting floor joists to girders or sills, use ledger plates with pier- or column-type foundations. The joist must not be notched more than one-third of its depth in the plate-sill connection (Figure 5-5).

Floor Bridging. For every 8 feet of span length, one line of bridging must be constructed (Figure 5-6). The bridging is toe-nailed to the joists with at least two ten-penny nails. The bottom of the bridging is not nailed until the rough floor is laid, to facilitate joists adjusting to final position. The bridging is generally 1- by 3-inch material.

Walls. Corner posts are built up with two or three layers (Figure 5-7). When a partition meets an outside wall, T-posts are used to provide an area for nailing the inside finish (Figure 5-8, page 5- 12). Studs are spaced 12, 16, and 24 inches center-to-center, depending on building and finish type, although TO construction standards for temperate climates permit spacing of up to 5 feet. The studs are fastened by two sixteen-penny or twenty-penny nails through the top plate. Girts are the same width as the studs so they will be flush. Girts parallel the plates with spacing of about 4 feet. The top plates are the same size as the stud with sixteen-penny or twenty-penny nails at all studs and corner posts. The sole plate is at least 2- by 4-inch timber or the same size as the wall thickness. Two sixteen-penny or twenty-penny nails are driven at each joist the sole crosses. If the sole runs parallel to the joist, there should be two nails every two linear feet. When horizontally placed, the bridging is about one- half the distance between sole and plate. Posts and walls should be plumbed and straightened, using a carpenter's level or plumb bob and a chalk line (Figures 5-9 and 5-10, pages 5-12 and 5-13).

Ceilings. Ceiling joists are the same size as floor joists. Joists are usually spaced about 16 inches center-to-center. Nailed to the plate and rafter whenever possible, the ceiling joists are lapped and spiked over bearing partitions. The joists are cut flush with rafters.

Rafters. Spacing of 16 to 48 inches is necessary in rafter construction. Measure rafter rise and run with tape to check the specified pitch. The rafters are fastened with sixteen-penny or twenty-penny nails

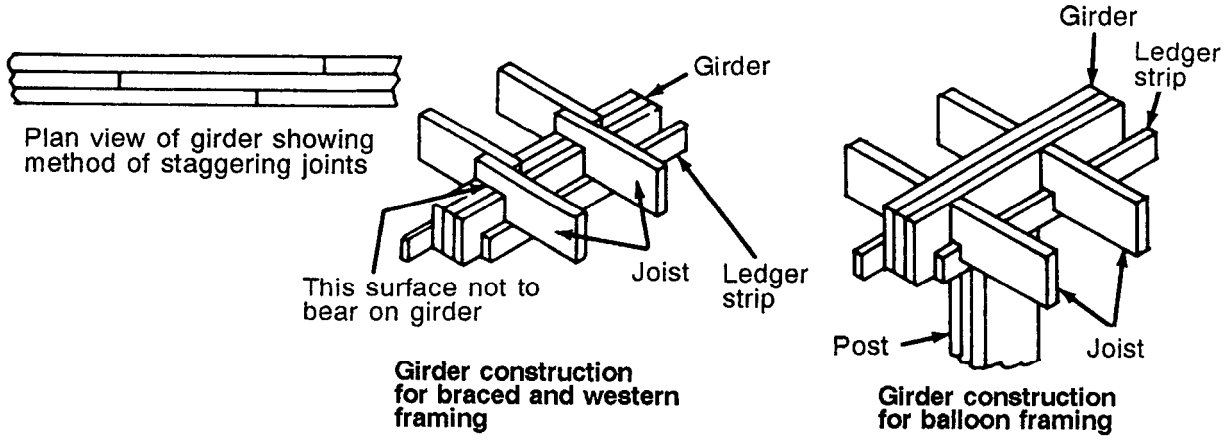

Figure 5-4. Built-up girders

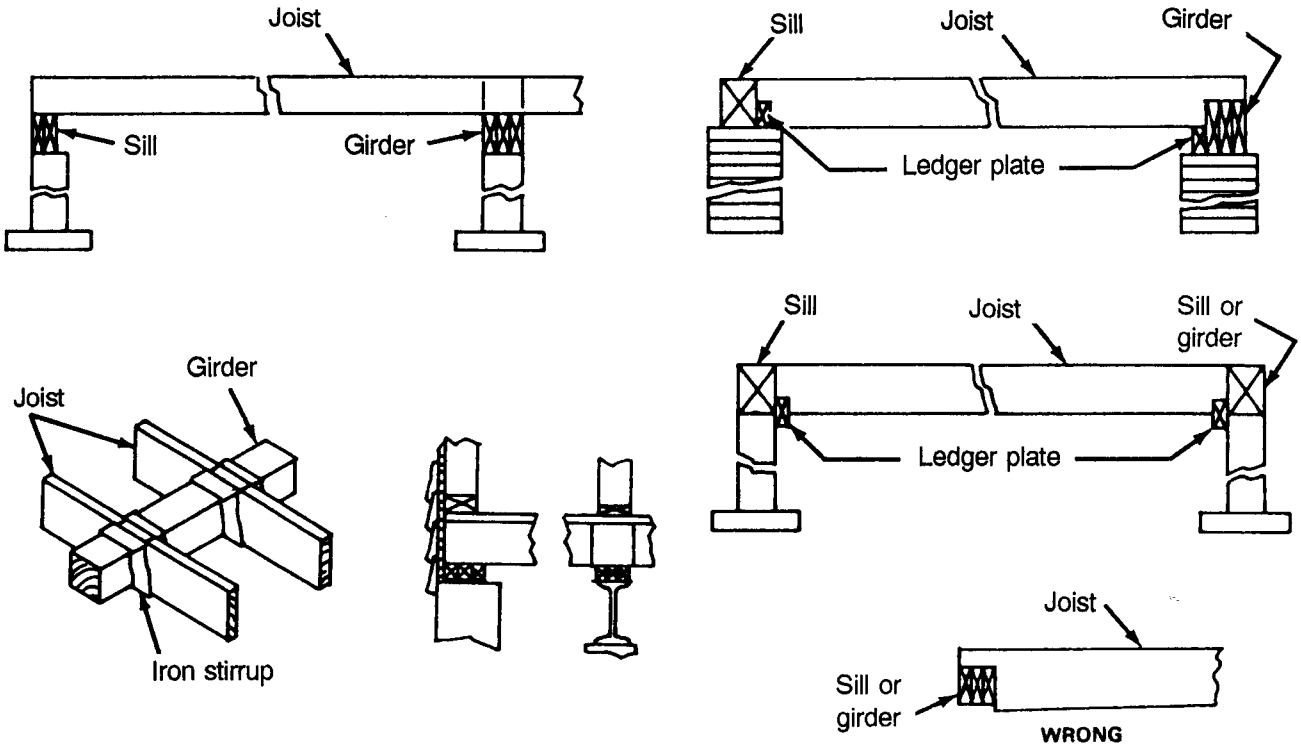

Figure 5-5. Joist connections

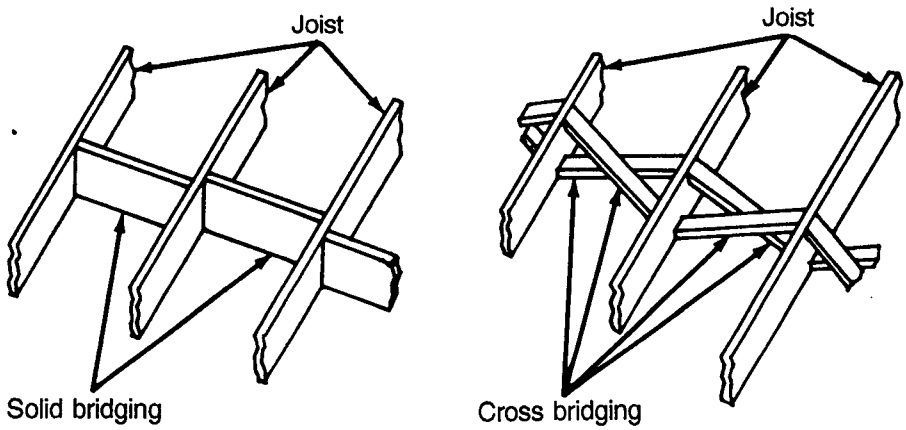

Figure 5-6. Floor-joist bridging

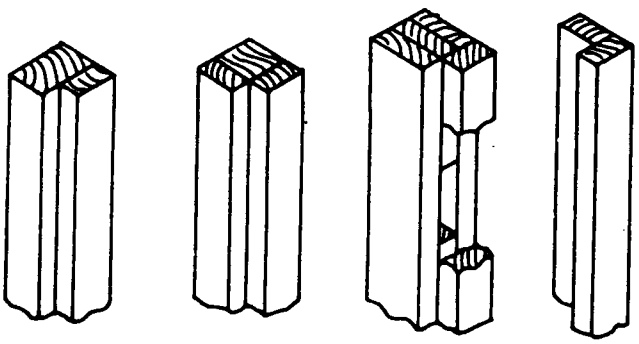

Figure 5-7. Corner post construction

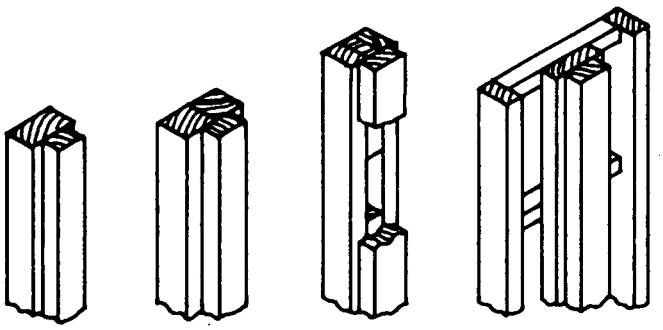

Figure 5-8. T-post construction

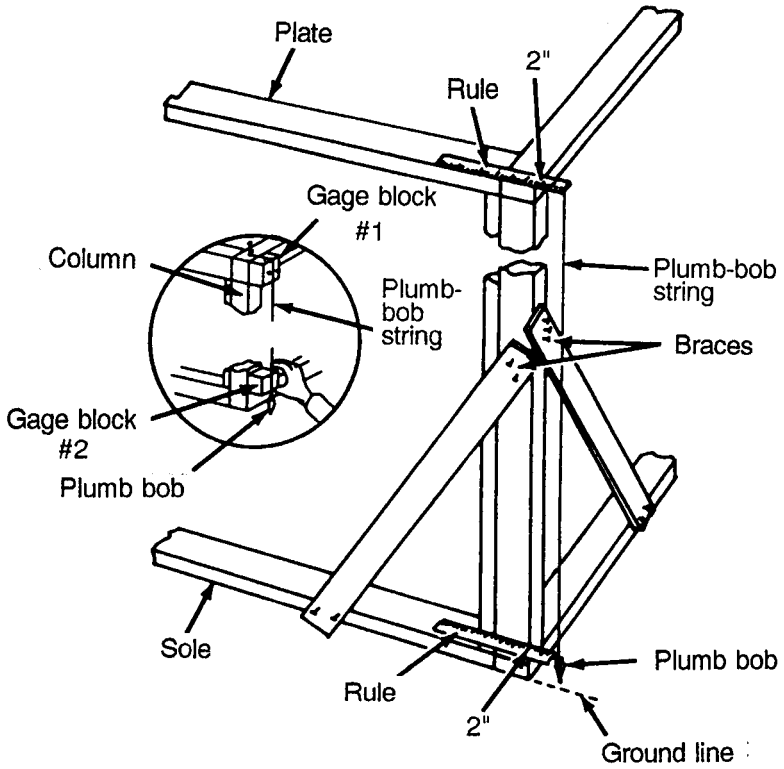

Figure 5-9. Plumbing posts

and are braced when long spans are necessary.

Openings. Openings (floor, door, roof, and window) are framed by headers and trimmers (Figures 5-11 and 5-12). Door openings should allow at least 1/2 inch between jamb and framing members in order to allow plumbing and leveling of jamb. Window openings require studding to be cut away and its equivalent strength replaced by redoubling the studs on each side of the opening to form trimmers and inserting a header at top. Wide openings need two headers with trusses added.

Steps and stairs. Step material must be measured to ensure that it is 2 or 3 inches thick and 6 or 8 inches wide. Stringers are at least 2- by 4-inch material, and stairways usually contain three sets. The ideal pitch of the stringers is obtained with a rise of 7 inches and a run of 10 inches. For

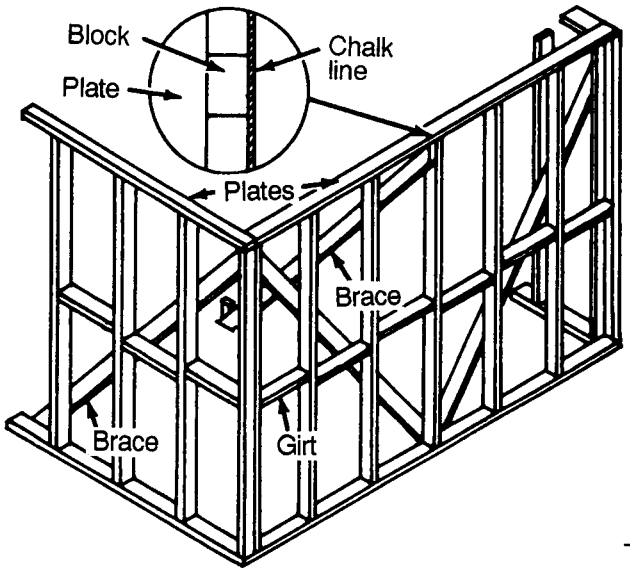

Figure 5-10. Straightening walls

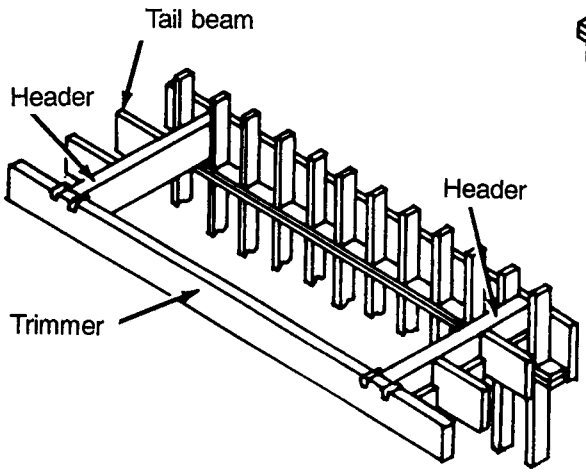

Figure 5-11. Floor openings

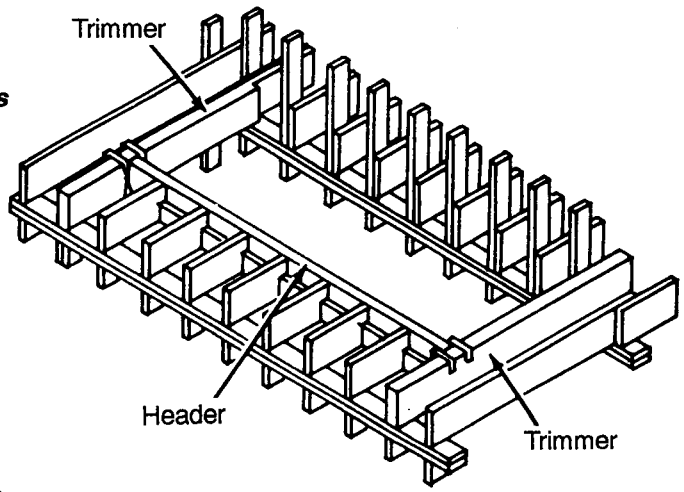

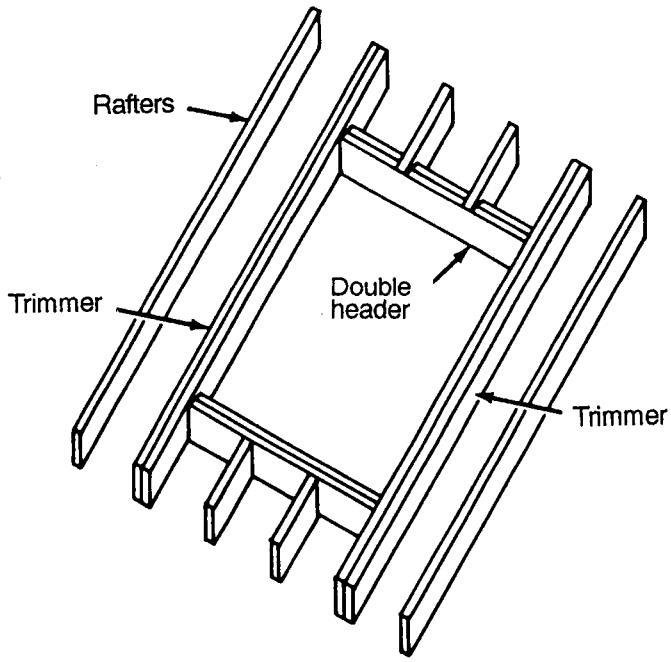

Figure 5-12. Roof opening

adequate headroom, clearance should be a minimum of 6 feet 8 inches.

Floors. The subfloor, when used, is laid diagonally and connected with eightpenny or tenpenny nails. Subflooring 8 inches wide or greater requires three or more nails per joist. Subflooring more than 1 inch thick should be fastened with larger nails. Finish flooring is generally 3/4 inch thick and 3 1/4 to 7 1/4 inches wide with square or grooved edges. Nails are driven in every joist and are eightpenny size, if the flooring is to support heavy loads and the material is 2 inches thick and 4 to 12 inches wide with only square edges. Stronger flooring is connected with sixteenpenny or twenty-penny nails.

Exterior walls. Sheathing should have no lengthwise gaps, and end joints should be placed over studs. Fastening is accomplished with three eightpenny nails if pieces are more than 6 inches wide. Sheathing size is 3/16 inch thick by 6, 8, 10 or 12 inches wide. Vertical siding cracks are covered by wood strips called battens which are attached by eightpenny or tenpenny nails. Horizontal siding of the beveled type needs a 1-inch overlap at the narrow end and a 2-inch overlap at the wide end. The nail is driven at the butt through the narrow portion. Drop horizontal siding, when used as combined sheathing and siding, requires tongue-and-groove lumber with the tongue up and nailed directly into the studs. If sheathing is not used, drop horizontal siding is applied after any opening casings are set. If sheathing is used, building paper and drop siding are applied after opening casings are set.

Concrete form construction. Field Manual (FM) 5-742 contains adequate designs for all types of required forms. Since forms tend to lose their shape after the concrete has been placed, measures must be taken to restrict spreading of forms. Generally, construction sheathing of 1-inch thick material is required for footing forms. It should be nailed to vertical cleats of 2-inch material spaced on 2-foot centers. All footing panels are tied together from opposite sides with Number 8 or 9, soft, black, annealed iron wrapped around center cleats. All nails are driven halfway for easy removal. Forms greater than 4 feet square require 1-by 6-inch boards nailed across the top to prevent spreading. Wall footings should have spreaders nailed at intervals to maintain the desired footing width. Check for adequate spreaders and ties around forms to eliminate spreading. Ensure that provision is made for removal of spreaders after concrete is placed.

CONCRETE

Take care to provide dry storage areas for cement. Before use, check cement for hard lumps that indicate partial hydration which causes reduced quality. Laboratory tests should be made on the mixing water to determine impurities, such as sulfates, that detract from concrete properties. If laboratory facilities are not available, water that is suitable for drinking is generally suitable for concrete production.

Structures. Portland cement is manufactured to meet several different qualities established by the American Society for Testing and Materials (ASTM). To assure the structural soundness of concrete structures, follow guidance in FM 5-742 for matching cement type with a particular structure.

Inspection of aggregate. Aggregate should be visually inspected for contamination by dirt, clay, or other organic matter, and weaknesses such as cracks. Practical aggregate shape calls for particles that are more rounded or cube-shaped than rough or sharp. Experience shows that either extremely fine or coarse sands (determined by visual inspection) are objectionable. Stockpiles of aggregate should be examined for segregation and contaminating features.

Tests. When portland cement admixtures are specified, tests are per formed to ensure desirable mixes. There are three such tests-pressure, volumetric, and gravimetric. Discussions of these tests and other

cement component checks are contained in FM 5-742.

Portioning of concrete mixtures. Three procedures are available to determine the amounts of each component of a concrete mixture. These are known as the book, trial-batch, and absolute-volume methods. All are adequate, although the book method may require adjustment in the field. Initial mixes should be sampled for appearance to determine whether proper proportions are present. Periodic checks to maintain quality should continue through the mix cycle. A concrete mixture which contains the correct amount of cement and sand will fill all spaces between coarse aggregate particles with mortar when troweled lightly. If voids between coarse particles are not filled after light troweling, the concrete mixture is deficient in cement-sand mortar. Spot inspection of all scales and measuring devices should take place every shift to assure accurate proportions. Check weights and volumes should be utilized regularly. Concrete consistency is generally measured by a slump test and checked against specifications. Proper methods for completing the slump test are outlined in FM 5-34 and FM 5-742.

Concrete construction joints. Check the effects of planes created by work from different days. Joints should be strategically placed in zones that will cause a minimum amount of weakness in the structure. These zones are located where shearing stresses and bending moments are small. The joints may also be reinforced by support from other members. Proper inspections should be made to check for suitable measures of reinforcing joints with keyways, V-joints, or steel bars.

Expansion and contraction joints. Check for location of expansion and contraction joints where there is a change in thickness, at offsets, and where the concrete will tend to crack if shrinkage and deformations due to temperature are restrained. Expansion joints should be observed for adequate filler of cork or premolded mastic. Generally, there should be expansion joints every 200 feet. Contraction joints are at 30-foot intervals or less. Dummy contraction joints are joints with no filler or with a thin paint coat of asphalt, paraffin, or other material to break the bond. These joints are to be at a depth of one-third to one-fourth the thickness of the structure.

Handling, transporting, and placement. Poor handling and transporting techniques can cause segregation of concrete. Mixes should be observed at regular intervals for mix separation resulting from poor delivery methods. Avoid placement drops of greater than 3 to 5 feet by using chutes, baffles, or pipes. Individual pourings of concrete layers should never exceed 20 inches thick (except in columns or piers). Check consolidation of concrete by observing the surface of the structure after forms are removed. A smooth finish indicates that proper vibration is being accomplished. Inspect finish quality by viewing surface characteristics. Small tears in the surface indicate screeding (smoothing) was too fast or performed without a bottom metal edge on the screed tool. If a smoother surface is desired, floating should be checked. Excessive floating is indicated by the appearance of excess water and mortar on surfaces. Further evidence is revealed when this fine material scales and tears. If the concrete surface is not as dense as specified, troweling may be tried. To check the efficiency of troweling, observe the surface. If the trowel leaves the concrete skin free of all marks and ripples, the process is satisfactory.

Curing. Take steps to ensure that curing is proceeding properly and that a standard curing method is being followed. All of the standard methods must be used to achieve specified strength during the concrete curing period (see FM 5-742).

Reinforced concrete construction. If concrete will have to withstand tension as well as compression, slender steel reinforcing bars are necessary. Reinforcing steel has been specified by ASTM with a minimum yield strength of 40,000, 50,000, 60,000, and 75,000 pounds per square inch (psi). The grade mark of the steel is stamped on

the standard bars. For example, a "40" will be located on a bar that has a yield strength of at least 40,000 psi. Plans will call for the minimum yield strength desired for particular structures. Hooks to reinforce areas are labeled by type in structure construction drawings. Care should be taken to check hook placement and type. All splices of bars are overlapped and tied, and should be staggered. Before placing concrete, check reinforcing pads for anchorage and correct if required. Bar intersections in flooring reinforcement should be tied with one turn of wire at frequent intervals to create a steady network.

Clear distances between parallel bars in columns should be measured and should be at least one and one-half times the bar diameter. Reinforcements are usually kept a minimum distance from outside concrete surfaces. Check for conformance.

MASONRY

The strength of all masonry lies in the mortar that bonds the structure. Specific jobs require designated types of mortar mixes, and steps must be taken to provide the designated category. A guide to favorable mixes is found in FM 5-742. Mixing time can affect quality and should be reviewed to guarantee the standard limits of at least 3 minutes of machine mixing are met. As in concrete mixing, mortar mixing requires accurate batching. An examination of the measuring processes should reveal any poor techniques, faculty equipment, and improper methods.

Materials. Concrete block, brick, and tile used in masonry construction are specified in plans to meet strength and size requirements. Details of block types and sizes are in FM 5-742. Rubblestone is an expedient raw material. Size has no bearing, although roughly squared stones are better. Rocks chosen should be strong and durable, such as limestone, sandstone, or granite.

Construction. The line, level, and plumb of all construction must be true and mess. ured regularly with a straightedge, plumb line, and level. All joints should be filled with mortar and adequately compacted. Masonry joints should be a uniform thickness and approximately 3/8 inch thick. The first levels of all masonry work should be constructed with extreme caution to assure alignment, level, and plumb throughout the structure.

Methods. Rubblestone wall quality depends on stone placement. Each stone should be placed on its broadest face; the larger stones should be at the base of the structure. Care should be taken that all voids between stones are filled with mortar. Bond stones that horizontally pass all the way through a cross section of the wall should occur at least once in every 10 square feet of wall. Usually, stone walls are aligned by sight. However, if exactly plumb and level stone walls are required, checks with a plumb line and level must be made.

STEEL

Inspect material for bent or twisted pieces. If the strength of a member is questioned, a bent piece of steel should not be straightened but should be used as stock to be cut for shorter lengths. Material with short kinks or buckles or material that shows surface cracks at the point of deformation should not be used.

Type and size. Fabrication of steel structures is restricted to the certain type and size of members that are noted on construction plans. The designated members should be identified by measuring the length and cross-sectional dimensions. The appropriate length and size will be given in the plans so that a cross check of all material can be made. To assure proper placement, each member can be marked with paint or chalk.

Connection. There are four different ways to connect steel structural members - bolts, rivets, pins, and welds.

Bolts. To determine if bolts of the proper length are being used, check the length of

thread that extends beyond the nut after tightening. This length should be about 1/4 inch. Bolts should be tightened with a structural offset wrench, first tightening the nut and then applying one last twist on the wrench. To avoid overstressing the bolt, do not use pieces of pipe or other extensions to wrench handles. If the structure is permanent, check to be sure the threads beyond the nut are hammered down. (All bolts should be coupled with at least one lock washer under the nut). If a pneumatic impact wrench is used, check adjustment of the wrench for proper tightening of bolts by measuring performance with a torque wrench. (Torque specifications are in the plans.) Inspect the connecting process to ensure that parts being fastened are aligned with driftpins before bolts are installed.

Rivets. Examine rivet connections for inadequate lengths, indicated by either capped heads when too long or undeformed heads when too shot. A table of recommended lengths of rivets is given in TM 5-744. Pieces to be fitted with rivets must be set up with bolts and tightened before riveting. Inadequate fastening by rivets is usually an indication of improper setup. Proper heating of the rivets is indicated by a light cherry-red color. To test for loose rivets, touch a finger or a small piece of metal to one side of the finished rivet. Tap the other side lightly with a hammer. An adequate joint will not transfer the vibration to the finger or to metal. To inspect for burning of the rivets, inspect the rivet head for pitted surfaces.

Pins. Inspect pin connections for holding mechanisms such as cotter pins or threaded recessed nuts. Great care must be exercised in boring pinholes, and they must be examined for smoothness, straightness, and perpendicular alignment to the member axis.

Welds. Weld joints must be continuously checked by a qualified inspector. Finish welds are examined for undercut, overlap, surface checks, cracks, and other defects. To become better qualified on criteria that separate a good weld from a bad one, compare the actual weld products to variations of welds. A procedure for training inspectors and welders involves varying the three welding parameters one at a time. These parameters are: current, voltage, and speed. Comparing the welds produced with varied parameters provides a basis for determining when faulty welding practices have been used. TM 5-744 illustrates the surface appearance of welds made under varying operating conditions. Properly welded joints should be uniform in appearance with evenly deposited weld metal. Fusion of the base metal at the point of contact of the weld is important and should be complete in a good joint.

PLUMBING MATERIALS

Military plumbing supplies are divided into five categories: cast iron, iron and steel, copper tubing, bituminized fiber, and asbestos cement. The plumber has little choice in the kind of material used since it is ordered by someone else. However, a few basic criteria dictate the acceptable grade of the plumbing supplies. Since cast iron, iron, and steel pipe are subject to corrosion, they should be checked for rust upon receipt and stored in a dry place. Also, cast iron is extremely brittle and should be checked for splits and cracks. Copper tubing is the most desirable material for water distribution systems. However, it has a tendency to split and should be checked.

Cutting. The steel-pipe cutting wheel should be visually checked for nicks or burrs. After the steel pipe is cut, following standard procedure, it must be reamed to remove the inside burr and filed to remove the outside burr. Cast-iron pipe is usually cut with a machinist's cold chisel and hammer. Inspection of the cut cast-iron pipe should show an even break around the circumference. If the break is not even, check to see that the cast-iron soil pipe is not being cut too fast. Copper tubing is cut with a pipe cutter or hacksaw. If a pipe cutter is used, check the cutting wheel for nicks or burrs. If a hacksaw is used, see that the blade is fine-toothed (24 teeth per inch). Also, cutting with a hacksaw should only

be accomplished with a miter box or a jig(a board with a V-groove for holding the tubing). Make a final visual inspection of the finish cut to ensure that no burrs remain and that the tubing is not out of round. Fiber pipe is cut with either a crosscut or a rip handsaw. Inspection of the cut should reveal a square and shred-free cut. To ensure a quality cut in fiber pipe, a miter box should be used.

Joining. Steel pipe must be threaded before joining. Before threading, check to ensure that the die and guide are the same size and correspond to the size of the pipe being threaded. Always inspect the threader to ensure that it has sharp dies free from nicks and wear. A quick check of a pipe joint is made by examining the number of threads. If the pipe was threaded to the correct length, two or three threads will show on the pipe beyond the face of the fitting. Cast-iron joints are made by caulking with lead or oakum. Inspect the quality of cast-iron joints for poor coverage and cracked pipe. To make sure that a copper-tubing joint has been properly soldered, check the connection for a complete line of solder around the joint. Asbestos-cement-pipe joints may be checked for quality by a special feeler gage. The gage is inserted between the sleeve and the pipe. The proper spacing of the rubber rings and any kinks are indicated by the gage.

Bending. In special cases, bending iron pipe may be more advisable than placing additional fittings. Check to determine which method is more practical or less difficult. Two criteria control bending— configuration and radius. It is desirable to leave a straight section between bends rather than to make a direct reverse bend.

SOIL

Knowledge of soil characteristics is vital to the quality construction of military roads and airfields. To determine properties, several identification procedures known as classification tests have been designed.

Classification. Classification is an engineering tool that provides the construction supervisor with information such as proper soils for base course and subgrade. Procedures for these tests (field identification, California bearing ratio, dry density, and such) are discussed in FM 5-430-00-1/Air Force Pamphlet (AFPAM) 32-8013, Vol 1 and FM 5-410. Once the soil has been classified (verified by laboratory tests when practical), FM 5-430-00-1/AFPAM 32-8013, Vol 1 and FM 5-410 may be used to arrive at the pertinent factors of that particular soil.

Construction control. The construction sequence for military roads and airfields may be listed as layout, clearing and grubbing, stripping, drainage, earthwork, subgrade preparation, base-course preparation, and wearing-surface preparation.

Layout. During the layout phase, a survey crew will place construction stakes along the proposed roadway or airfield. The construction stakes indicate alignment, cut, and fill. Before any other construction occurs, the supervisor must double-check the survey work with the design. The information on the stakes, such as elevation, slope ratios, and cut-fill amounts, may be compared to specifications on the design for accuracy.

Clearing, grubbing, and stripping. The control of clearing, grubbing, and stripping stages of construction assures that all stumps, boulders, vegetation, and material above the surface are removed so that construction will not be hindered.

Drainage. Probably the most important aspect of road and airfield construction is drainage. A supervisor must be aware of and prepare for adequate drainage throughout all the construction process. Soils may be divided into three groups of different drainage characteristics. Well-draining soils are sands and gravel such as those classified as GW, GP, SW, or SP. Open ditches may be used in these soils to achieve effective drainage. Poorly draining soils are silts and clays such as ML, OH, MH, GM, and

SM categories. Subsurface drainage systems should be utilized in these poorly draining soils. The final class is impervious soils such as GC, SC, CL, CH, and OH groups. This type of soils requires overdesign of subsurface drainage to be effective. Generally, a supervisor may expect poorer drainage on a site with coarse-grained soils than with fine-grained soils. A good rule when considering construction drainage is to maintain at least 5 feet between the construction and the top of groundwater. This distance may be obtained by either raising the work level or lowering the groundwater table, Natural drainage should be used, whenever possible.

Earthwork. In construction, earthwork involves cuts and fills. The standard cut for highway or airfield construction is 1 1/2:1 which is suitable for favorable soils (Figure 5-13). Favorable soils are cohesive, sandy or gravelly soil or dry, cohesionless soils. However, if the depth of the cut exceeds 20 feet, the slope should be based on experience in that particular area, stability analysis (described in FM 5-430-00-1/AFPAM 32-8013, Vol 1), or excavation of trial slopes. Generally, if the cut exceeds 20 feet, the slope ratio may have to be reduced. Because of their erosion characteristics, sandy or loamy soil cuts should never be greater than 2:1. Slopes steeper than the standard cut can only be planned in rocky areas; in dense, sandy soil interspersed with boulders; or in loess. When construction is to occur in loose, saturated sand, soft clays, or weathered rock areas, caution must be used in making standard cuts. Usually the slopes will have to be flattened, drainage improved, or retaining walls constructed. The standard slopes for a fill in military construction vary from 1 1/2:1 to 3:1. The slope selected is based on the soil embankment characteristics given in FM 5-430-00-1/AFPAM 32-8013, Vol 1. Soils used in construction fills generally should be coarse-grained. Care should be taken during stripping to ensure that all organic material (usually 1 foot of top soil) is removed. Organic material is not suitable for construction material because it cannot be compacted to achieve the design specifications for strength and stability. Control generally takes the form of field checks of moisture and density to determine whether the specified density is being attained (see FM 5-430-00-1/AFPAM 32-8013, Vol 1). Adjustments in the rolling process and moisture additions to achieve the specifications must follow the density measurements if out of limits.

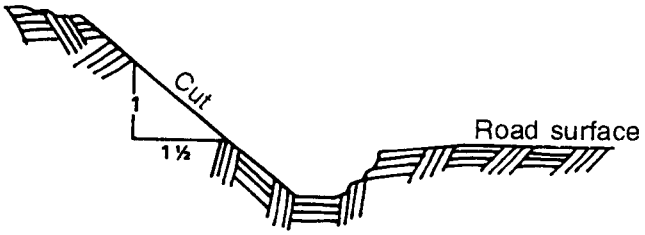

Figure 5-13. Cut-slope ratio in favorable soils

Subgrade preparation. Soil materials such as expansive clays, silts, and strength-losing clays cannot be compacted to design densities, and proper procedures for handling such material must be used. Acceptable subgrade material preparation is controlled to a minimum modified American Association of State Highway and Transportation Officials (AASHTO) requirement by ensuring that dry density and moisture content are adequate.

Base-course preparation. Information relative to subbase and base construction for specific construction materials is contained in FM 5-430-00-l/AFPAM 32-8013, Vol 1.

Wearing-surface preparation. Wearing surfaces of military roads and airfields are classified in three groups— rigid, bituminous, and natural. The design and the requirements of construction determine which material will be used.

EARTH-MOVING OPERATIONS

CHAPTER 6

EQUIPMENT

Earth moving may include site preparation, excavation and backfill, dredging, and preparing base and subbase. The type of equipment used can have a great effect on the man-hours and machine-hours required to complete a given amount of work. Before estimates can be prepared, a decision must be reached on the best method of operation and the type of equipment to be used. Equipment selection should be based on efficient operation and availability of equipment. It is best to use any available equipment that can reduce the amount of manual labor required. Since most earth-moving operations can be performed by machines with operators, manual labor should be avoided.

SITE PREPARATION

Site preparation includes clearing and grubbing operations such as removing, piling, and burning trees and brush; removing stumps; and loading and hauling cut trees and brush. Site preparation also includes cut-and-fill earth-moving operations, removing existing asphalt and concrete structures (paving, walks, and curbs), excavating and hauling from cut areas, as well as spreading and compacting into fill areas.

EXCAVATION AND BACKFILL

Excavation and backfill includes trenching and ditching, digging bell holes, excavating for footings and foundations, general excavation, and removing excess earth. It also includes trimming and grading, water removal, shoring and bracing, backfilling and compacting, excavating and hauling fill, spreading and compacting fill, and general grading.

DREDGING OPERATIONS

Included in dredging operations is preparation of a spoil area for dredged material as well as construction of dikes when required, setting and connecting discharge lines from dredge, dredge operations, barge operations, and disconnecting and removing discharge lines. It also includes underwater excavation with a dragline or clamshell, hauling dredged material by truck or barge, and disposal of material.

BASE AND SUBBASE PREPARATION

Base and subbase preparation includes grading and smoothing, excavating, loading, hauling, spreading, rolling, sprinkling, and fine-grading selected material to form the base or subbase. A factor for compaction (see Table 6-1) should be added to the computed compacted quantity to obtain the quantity of loose material that must be handied.

GRAPHIC AIDS

Graphic aids are useful for estimating production rates for any repetitious construction operation that has several definable variables.

The variables may be arranged in graphic form as shown in Figure 6-1. The graphic form uses the direct reading capability of the nomogram or nomograph to show the relative effect of the variables on production.

NOMOGRAPH

Seven variables are incorporated into one graphic representation in the earth-moving nomogram (Figure 6-1). Two variables were fixed: capacity at 5 cubic yards per truck and time at 10 hours per day. The time delay per trip, distance, speed, number of trucks, and total volume hauled per day were then progressively locked into the nomograph to form this unique estimating tool.

EXAMPLE

Find the volume of earth in cubic yards hauled per 10-hour day in 20 trucks, each averaging 5 cubic yards per trip, and with an average time delay of 30 minutes, average speed of 25 miles per hour (mph), and an average haul distance of 7.5 miles.

Using the nomograph (Figure 6-1) to find the volume, follow the broken line 30 - A - B - C - D - E - F .

- Average time delay per truck per trip for loading, dumping, maintenance, and contingency during a 10-hour workday is 30 minutes. Enter nomograph at average time delay of 30.
- Average speed is 25 mph. Project average delay time of 30 to 25 mph - A.

Table 6-1. Typical earth - volume conversion factors

Soil type	Initial soil condition	In place	Converted to: Loose	Compacted
Sand	In place	--	1.11	0.95
	Loose	0.90	--	0.86
	Compacted	1.05	1.17	--
Loam	In place	--	1.25	0.90
	Loose	0.80	--	0.72
	Compacted	1.11	1.39	--
Clay	In place	--	1.43	0.90
	Loose	0.70	--	0.63
	Compacted	1.11	1.59	--
Rock (blasted)	In place	--	1.50	1.30
	Loose	0.67	--	0.87
	Compacted	0.77	1.15	--

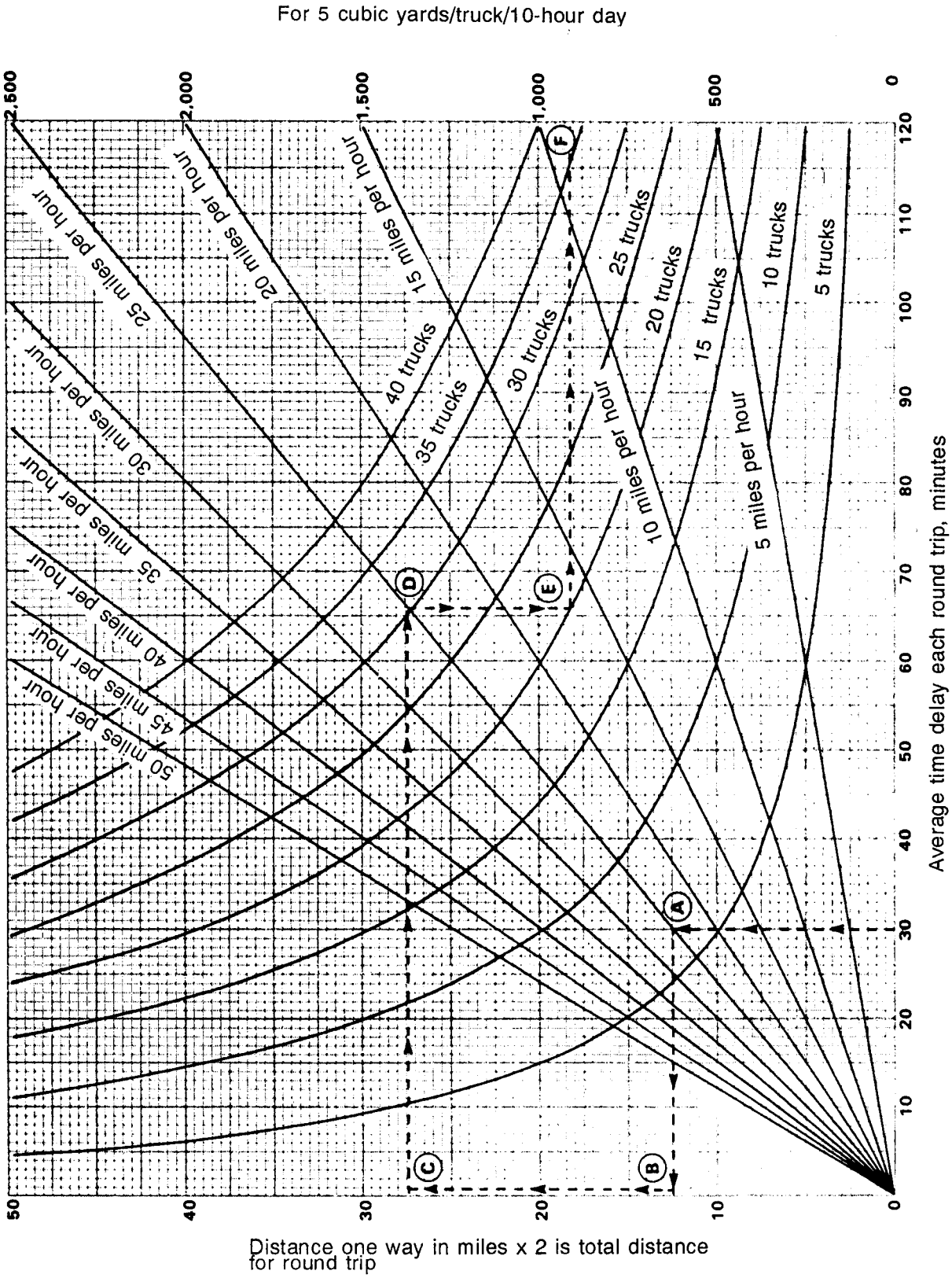

Figure 6-1. Earth-moving nomograph

- Read across to distance equivalent - 12.5 miles - B.
- Average haul distance is 7.5 miles. Double for round trip. Combined distance, D, is 27.5 miles - C.
- Project to 25 mph (speed) - D.
- Twenty 5-yard trucks are used - E.
- Read across to production line, V - cubic yards hauled is 910 cubic yards per day - F.

Check by computation:

t = time delay/trip, minutes	= 30 minutes
S = speed	= 25 mph
d = distance one way	= 7.5 miles
N = number of trucks	= 20 trucks
Q= quantity per truckload	= 5 cu yd
H = hours/day haulage	= 10 hrs/day
V = volume hauled/day, cubic yards = (To be determined)	

Then,

$$V = \frac{S}{S(t/60) + 2d} NQH$$

$$V = \frac{25 \text{ mph}}{25 \text{ mph } (30 \text{ min}/60 \text{ min per hour}) + (2 \times 7.5 \text{ miles})} \times 20 \text{ trucks} \times 5 \text{ cubic yards per truck} \times 10 \text{ hrs per day}$$

$$V = \frac{25 \text{ mph}}{27.5 \text{ miles}} 1{,}000 \text{ cubic yards per day}$$

$$V = 909.09 \text{ cubic yards per day or } 910 \text{ cubic yards per day}$$

ESTIMATING TABLES

Tables 6-2 through 6-7, pages 6-5 through 6-10, may be used in preparing machine and man-hour estimates for earth moving. These tables are off-site estimating data, not exact figures. Since the variables affecting earth moving are many, much consideration should be given to situations and conditions varying from the nor8s these tables are based upon. A table on soil variation conversion factors (Table 6-8, page 6- 10) and a table on boom swing angle conversion factors (Table 6-9, page 6-11) should be used when necessary. These are only two variables of many that must be considered. The prevailing conditions and situations will always govern earth-moving estimates. Other conversion factors are listed in Tables 6-10 through 6-14, on pages 6-12 through 6-15.

Table 6-2. Site preparation - clearing and grubbing

Work element description	Tree diameter (in inches)	Equipment	Unit	Hours/unit (Rate in equipment hours)
Machine work:[1]				
Light clearing		D7 dozer	1,000 sq yd	0.84
		D8K dozer	1,000 sq yd	0.69
Medium clearing	1 - 5	D7 dozer	1,000 sq yd	1.70
		D8K dozer	1,000 sq yd	1.10
Difficult clearing	6 - 12	D7 dozer	10 ea	0.50 - 1.50
(For trees and stumps,		D8K dozer	10 ea	0.33 - 1.00
good conditions, good	13 - 30	D7 dozer	10 ea	0.85 - 3.50
traction, no steep		D8K dozer	10 ea	0.85 - 3.50
slopes.)	over 30	D7 dozer	10 ea	1.50 - 5.50
		D8K dozer	10 ea	2.00 - 6.00
Handwork:[2]				**(Rate in man-hours/unit)**
Light clearing		Axes, brush hooks, hatchets, machetes	100 sq yd	2.50
Medium clearing		Axes, cross saws	100 sq yd	5.00
Cutting large trees:		Axes, cross saws		
(Removing branches,	8 - 12		ea	9.00 - 12.00
cutting into short	13 - 18	Crew = 4 workers	ea	12.00 - 16.00
lengths)	19 - 24		ea	20.00 - 24.00
	25 - 36		ea	26.00 - 30.00
	8 - 12	Chain saws, axes	ea	2.00 - 3.00
	13 - 18	Crew = 3 workers	ea	3.00 - 4.00
	19 - 24		ea	5.00 - 6.00
	25 - 36		ea	6.00 - 8.00
Removing stumps	8 - 12	Picks, shovels, axes	ea	8.00
	13 - 18	Crew = 3 workers	ea	10.00
	19 - 24		ea	12.00
	25 - 36		ea	15.00
Blasting trees		Demo	10 ea	1.50
Blasting stumps		Demo, sledge hammer, priming stake. Crew = 3 workers	ea	1.00
Piling and burning		Labor	100 sq yd	0.80

[1]Typical crew: 1 crew leader, 1 dozer operator, and 2 to 5 workers with chain saws and axes cutting and trimming.
[2]Typical crew: 1 crew leader, 4 to 8 workers with brush hooks and axes, 1 to 2 workers with portable chain saws, and 2 to 5 workers burning.

Table 6-3. Site preparation - earth moving, cutting, and filling

Work element description		Equipment	Unit	Hours/unit (Rates in equipment hours)
Machine work:[1]				
Excavate and load into trucks		Power shovel - 3/4-yd[2]	1,000 cu yd	9.00
		Dragline - 3/4-yd[2]	1,000 cu yd	12.00
		Clamshell - 3/4-yd[2]	1,000 cu yd	17.00
One-way distance:	50 ft	Scoop loader - 2 1/2-yd	1,000 cu yd	3.50
		- 5-yd	1,000 cu yd	7.00
	100 ft	Scoop loader - 2 1/2-yd	1,000 cu yd	5.20
		- 5-yd	1,000 cu yd	10.40
	200 ft	Scoop loader - 2 1/2-yd	1,000 cu yd	7.10
		- 5-yd	1,000 cu yd	14.20
	300 ft	Scoop loader - 2 1/2-yd	1,000 cu yd	10.40
		- 5-yd	1,000 cu yd	20.80
Haul in trucks:		5-ton dump[3]	1,000 cu yd	42.00
(Assume approximately 4 cycles per hour)		20-ton dump[3]	1,000 cu yd	17.50
Excavate, load, haul (round trip) cycle time:				
	3 min	18-yd scraper	1,000 cu yd	3.50
	5 min	18-yd scraper	1,000 cu yd	5.60
	7 min	18-yd scraper	1,000 cu yd	7.80
	10 min	18-yd scraper	1,000 cu yd	11.10
Strip topsoil/stockpile soil, shallow excavation		D7 dozer	1,000 cu yd	35.00
		D8K dozer	1,000 cu yd	22.60
Spread fill		D7 dozer	1,000 cu yd	15.00
		D8K dozer	1,000 cu yd	9.60
Sprinkle		1,000-gal distributor	1,000 sq yd	0.04
Compact	2 passes	Sheepsfoot roller	1,000 sq yd	0.19
	4 passes	113 in wide (2 rollers)	1,000 sq yd	0.39
	6 passes		1,000 sq yd	0.58

[1]Crew: Crew leader and machine operators/dump-truck drivers as required or available.
[2]See Table 6-8 for conversion factors for swing angle.
[3]To use for other than 4 trips/hour, calculate cycle time and use appropriate proportions.

Example: Cycle time of 20 minutes = 3 trips/hour. Then (4 trips/hour)(42 hours) = (3 trips/hour)(? hour) = 56 equipment hours/1,000 cubic yards.

Table 6-4. Trenching, ditching, and backfilling

Work element description		Equipment	Unit	Hours/Unit
Machine work:[1]				**Rates in equipment hours**
Trench and ditch excavation		SEE	1,000 cu yd	144.00
Backfill		CAT 130 grader	1,000 cu yd	2.00
Compact	2 passes	Sheepsfoot roller	1,000 sq yd	0.19
	4 passes	10 feet wide (2 rollers)	1,000 sq yd	0.39
	6 passes		1,000 sq yd	0.58
"V" ditching	Easy	CAT 130 grader	1,000 cu yd	3.70
	Medium	CAT 130 grader	1,000 cu yd	6.40
	Hard	CAT 130 grader	1,000 cu yd	11.50
Handwork:[2]				**Rates in man-hours**
Excavation (6 ft max depth)		Shovels, pick	cu yd	1.75
Bell holes			10 ea	1.00
Backfill		Shovels	cu yd	0.75
Tamp		Pneumatic tamp	cu yd	0.70
Shoring walls				
Excavation depth:	5 - 8 ft	Sheet piling, lumber, nails,	100 sq ft	16.00
	10 - 15 ft	hammers, saws	100 sq ft	20.00

[1]Crew: 1 crew leader and operators as required or as available.
[2]Typical crew: 1 crew leader, 2 to 10 workers excavating, 1 to 2 workers bell holes, and 2 to 8 workers backfilling and tamping.

Table 6-5. Excavation for footings and foundations and general excavation

Work element description	Equipment	Unit	Hours/unit
Machine work:[1]			**Rates in equipment hours**
Excavate and load into trucks	Power shovel - 3/4-yd[2]	1,000 cu yd	9.00
	Dragline - 3/4-yd[2]	1,000 cu yd	12.00
	Clamshell - 3/4-yd[2]	1,000 cu yd	17.00
One-way distance: 50 ft	Scoop loader - 2 1/2-yd	1,000 cu yd	2.70
	- 5-yd	1,000 cu yd	1.35
100 ft	Scoop loader - 2 1/2-yd	1,000 cu yd	4.00
	- 5-yd	1,000 cu yd	2.00
200 ft	Scoop loader - 2 1/2-yd	1,000 cu yd	5.40
	- 5-yd	1,000 cu yd	2.70
300 ft	Scoop loader - 2 1/2-yd	1,000 cu yd	8.00
	- 5-yd	1,000 cu yd	4.00
Trimming	CAT 130 grader	1,000 cu yd	6.40
Haul with trucks:	5-ton dump	1,000 cu yd	42.00
(Assume approximately 4 round trips per	20-ton dump	1,000 cu yd	19.50
hour)		1,000 cu yd	15.00
Spread spoil pile	D7 dozer	1,000 cu yd	9.20
	D8K dozer	1,000 cu yd	28.20
Spread excess earth	D7 dozer	1,000 cu yd	17.20
	D8K dozer	1,000 cu yd	17.80
Backfill	D7 dozer	1,000 sq yd	11.00
	D8K dozer	1,000 sq yd	0.19
Compact 2 passes	Sheepsfoot (2 drums abreast)	1,000 sq yd	0.10
	Tamping foot	1,000 sq yd	0.39
4 passes	Sheepsfoot (2 drums abreast)	1,000 sq yd	0.20
	Tamping foot	1,000 sq yd	0.58
6 passes	Sheepsfoot (2 drums abreast)	1,000 sq yd	0.29
	Tamping foot		
Grading:	CAT 130 grader	1,000 sq yd	0.10
(Digging side ditches, shaping crown, smoothing, and such)			
4 round trips			
Handwork:[3]			**Rates in man-hours**
Excavate and load into trucks	Picks, shovels	cu yd	3.00
Spread loose soil	Shovels	cu yd	0.33
Backfill, shovel only	Shovels	cu yd	1.33
Backfill and tamp	Shovels, pneumatic tamp	cu yd	2.50
Haul up to 150 ft	Wheelbarrow	cu yd	1.00
Trim and fine grade	Shovels, rakes	100 sq yd	2.00
Shoring for basements, foundations, and such			
Depth: 8 - 12 ft	Lumber, sheet piling	100 sq ft	25.00
14 - 20 ft	Nails, hammers, saws	100 sq ft	30.00
8 - 12 ft	With pneumatic hammers	100 sq ft	21.00
14 - 20 ft	With pneumatic hammers	100 sq ft	26.00

[1]Typical crew: 1 crew leader, 2 workers on excavation equipment, 2 to 6 workers on haul equipment, 1 worker on compact equipment, and 1 worker on grading equipment.
[2]See Table 6-8, page 6-10, for conversion factors for swing angle.
[3]Typical crew: 1 crew leader; 2 to 10 workers excavating, loading, spreading, backfilling, compacting, trimming, fine grading, and tamping; and 2 or more workers shoring.

Table 6-6. Preparing subbase and base

Work element description		Equipment	Unit	Hours/unit
Machine work:[1]				**Rates in equipment hours**
Subbase:				
Scarify and shape	Scarify	D7 dozer with rippers	1,000 sq yd	3.11
		D8K dozer with rippers	1,000 sq yd	2.00
	Shape	CAT 130 grader	1,000 sq yd	2.50
Compact	2 passes	Sheepsfoot (2 drums abreast)	1,000 sq yd	0.19
		Tamping foot	1,000 sq yd	0.10
	4 passes	Sheepsfoot (2 drums abreast)	1,000 sq yd	0.39
		Tamping foot	1,000 sq yd	0.20
	6 passes	Sheepsfoot (2 drums abreast)	1,000 sq yd	0.58
		Tamping foot	1,000 sq yd	0.29
	2 passes	9-tire pneumatic tire roller	1,000 sq yd	0.25
	4 passes	9-tire pneumatic tire roller	1,000 sq yd	0.49
	6 passes	9-tire pneumatic tire roller	1,000 sq yd	0.74
	2 passes	2-axle, 5-8 ton tandem roller	1,000 sq yd	0.29
	4 passes	2-axle, 5-8 ton tandem roller	1,000 sq yd	0.58
	6 passes	2-axle, 5-8 ton tandem roller	1,000 sq yd	0.89
Base Course: Spread material		D7 dozer	1,000 cu yd	3.11
		D8K dozer	1,000 cu yd	2.00
Shape surface		CAT 130 grader	1,000 cu yd	5.00
		CAT 130 grader	1,000 sq yd	2.22
Compact gravel		Tandem roller, 8-ton	1,000 sq yd	1.33
	10 passes	Rubber-tired roller	1,000 sq yd	2.50
Handwork:[2]				**Rates in man-hours**
Spread, sprinkle, and compact		Shovels, pneumatic tamps	cu yd	2.00
Fine grade, sprinkle, and compact		Rake, shovel, pneumatic tamp	sq yd	0.20

[1]Typical crew: 1 crew leader; 2 to 4 workers on loading and shaping equipment; 2 to 6 workers on hauling equipment; and 3 to 5 workers on spreading, sprinkling, compacting, and fine-grading equipment.
[2]Crew: 1 crew leader and 2 to 10 workers spreading, sprinkling, compacting, and fine grading.

Table 6-7. Underwater excavation

Work element description	Equipment	Unit	Hours/Unit
Machine work:[1]			**Rate in equipment hours**
Build dike around spoil area[2]			
Operate dredge	Hydraulic dredge	1,000 cu yd	10.0
Underwater excavation	Clamshell - 3/4-yd	1,000 cu yd	25.0
	Dragline - 3/4-yd	1,000 cu yd	17.0
Spoil disposal: (Truck: Assume 6 cu yd/truck, 4 round trips/hr)	5-ton dump	1,000 cu yd	42.0
Spoil disposal: Barge	Barge with clamshell[3]	1,000 cu yd	50.0
	Barge with dragline[3]	1,000 cu yd	33.3
			Rates in man-hours
Install and remove discharge lines (hand work)	Hydraulic dredge	100 lin ft	10.0

[1]Typical crew: 1 crew leader; 4 to 7 workers installing and removing discharge lines; 3 to 5 workers per shift operating dredge (usually operated on a 2- or 3-shift basis around the clock); and 1 worker with equipment building dike with 3 workers installing drainpipes through dike. For dragline or clamshell excavation, 1 operator and signal person on dragline, 2 to 5 trucks with operators hauling spoil, 1 worker to direct loading of spoil on barge, 2 barges (1 loading and 1 unloading), 2 workers and 1 bulldozer unloading barge at disposal area, and 1 tugboat and crew (usually 3 to 5 workers).
[2]See earth-moving tables.
[3]Assume rotation of 2 barges per machine with short haul distance.

Table 6-8. Conversion for soil variables

	Type machine efficiency factors					Hand efficiency factors
Soil type	3/4-yd power shovel	3/4-yd dragline	3/4-yd clamshell	2 1/2-yd scoop loader	SEE	Manual
Loose sand-clay or moist loam	0.82	0.81	0.74	0.77	0.72	0.65
Sand-gravel	0.88	0.84	0.83	0.83	0.81	0.75
Good common earth	1.00	1.00	1.00	1.00	1.00	1.00
Hard, tough clay	1.23	1.17	Not recommended	1.26	1.25*	1.29
Rock, well blasted	1.43	Not recommended	Not recommended	Not recommended	Not recommended	Not recommended
Wet clay	1.93	1.91	Not recommended	Not recommended	Not recommended	Not recommended
Rock, poorly blasted	2.70	Not recommended	Not recommended	Not recommended	Not recommended	Not recommended

*Recommended with multitooth bucket only.

NOTE: Earth-moving tables are compiled using "good common earth" as a norm. Therefore, to use this table, figure as follows:
Hours required = {(quantity to be excavated)/unit} x unit hours required x efficiency factor

Table 6-9. Conversion for swing angle at optimum depth

Equipment	Swing angle in degrees							
	30	45	60	75	90	120	150	180
Dragline	0.76	0.84	0.90	0.95	1.00	1.10	1.21	1.30
Clamshell	0.76	0.84	0.90	0.95	1.00	1.10	1.21	1.30
Power shovel	--	0.80	0.86	0.93	1.00	1.14	1.27	1.41

NOTES:
1. Earth-moving tables are compiled using 90° swing angle.
2. Table use: *New rate in hours = rate of excavation to be used x swing angle-factor*

Table 6-10. Material weights and swell factors

Material	Number per cubic yard (loose)	Number per cubic yard (in place)	Percent of swell	Swell factor
Cement, Portland	2,450	2,950	20	0.83
Clay, natural red	2,700	3,500	30	0.77
Clay and gravel, dry	2,300	3,100	34	0.74
Clay and gravel, wet	2,600	3,500	34	0.72
Concrete	2,650	3,700	40	0.72
Concrete, wet mix	3,600	3,600	40	0.72
Earth, dry loam	2,300	2,850	25	0.81
Earth, wet loam	2,750	3,400	24	0.81
Granite	2,800	4,560	65	0.60
Gravel, 1/4- to 2-in, dry	2,850	3,200	12	0.89
Gravel, 1/4- to 2-in, wet	3,200	3,600	13	0.89
Laterite	3,900	5,200	33	0.75
Limestone, blasted	2,500	4,250	69	0.59
Limestone, crushed	2,700	4,500	67	0.60
Limestone, marble	2,700	4,550	69	0.59
Mud, dry	2,100	2,550	21	0.82
Mud, wet	2,650	3,200	21	0.83
Sand, dry	2,750	3,100	13	0.89
Sand, wet	3,150	3,600	14	0.88
Sandstone, shot	2,700	4,250	58	0.64
Shale, riprap	2,100	2,800	33	0.75
Slate	3,600	4,700	30	0.77
Coral, class #2, soft	1,760 2,030	2,900 3,350	65	0.61
Coral, class #1, hard	2,030 2,440	2,900 4,075	67	0.60

NOTES:
1. Percent of swell times the bank (in place) cubic yards equals the loose cubic yards to be moved.
2. Swell factor times the loose cubic yards equals bank cubic yards being moved.
3. Compaction factor times the volume of the fill equals the loose material required for compacted fill.

Trench depth (inches)	Trench width, inches 12	18	24	30	36	42	48
	Content of trench, cubic yards per 100 linear feet						
6	1.9	2.8	3.7	4.6	5.6	6.6	7.4
12	3.7	5.6	7.4	9.3	11.1	13.0	14.8
18	5.6	8.3	11.1	13.9	16.7	19.4	22.3
24	7.4	11.1	14.8	18.5	22.2	26.0	29.6
30	9.3	13.8	18.5	23.2	27.8	32.4	37.0
36	11.1	16.6	22.2	27.8	33.3	38.9	44.5
42	13.0	19.4	25.9	32.4	38.9	45.4	52.0
48	14.8	22.2	29.6	37.0	44.5	52.0	59.2
54	16.7	25.0	33.3	41.6	50.0	58.4	66.7
60	18.6	27.8	37.0	46.3	55.5	64.9	74.1

Table 6-12. General excavation factors

Depth	Cubic yards to be removed per square foot of area
2 in	0.006
4 in	0.012
6 in	0.018
8 in	0.025
10 in	0.031
1 ft	0.037
1 1/2 ft	0.056
2 ft	0.074
2 1/2 ft	0.093
3 ft	0.111
3 1/2 ft	0.130
4 ft	0.148
4 1/2 ft	0.167
5 ft	0.185
5 1/2 ft	0.204
6 ft	0.222
6 1/2 ft	0.241
7 ft	0.259
7 1/2 ft	0.278
8 ft	0.296
8 1/2 ft	0.314
9 ft	0.332
9 1/2 ft	0.350
10 ft	0.369

Example:
Assume that an excavation is 24 feet x 30 feet and 6 feet deep (24 x 30 = 720). In the table, the 6-foot depth has a factor of 0.222 (the number of cubic yards in an excavation 1 foot square and 6 feet deep). Therefore, 720 x 0.222 = 159.84 cubic yards.

Table 6-13. Front-end-loader production

Excavation from pit to truck pile (hourly production)

Bucket size	Haul distance			
	50 feet	100 feet	150 feet	200 feet
	Cubic yards			
1 1/4	39	28	21	17
2 1/2	124	92	75	62
5 1/2	312	244	200	167

NOTE: Figures are in loose cubic yards. Use Table 6-1 to find the amount of bank cubic yards (in place) removed per hour.

Example:
2 1/2 cubic yards loader at 50' haul = 124 loose cubic yards.
124 cubic yards x swell factor for earth, loam, dry = 124 x 0.81 = 100 bank cubic yards in one hour.

Table 6-14. Bulldozer production

Loose cubic yardage hourly production (based on 50-minute hour)

Dozer size	Haul distance					
	50 feet	100 feet	150 feet	200 feet	250 feet	300 feet
	Cubic yards					
Large (D-8/TD25)	435	285	210	170	125	95
Medium (D-7/TD20)	370	205	155	100	74	55
Small (D-4/TD9)	105	65	46	34	22	--

NOTES:
1. Figures are in loose cubic yards. Use Table 6-1 to find the amount of bank cubic yards (in place).
2. Production is based on slot dozing. If work is done without slots, reduce figures by 25 percent.

PAVING OPERATIONS CHAPTER 7

TYPES

This chapter covers the construction of asphalt and concrete paving, curbs, and walks.

EQUIPMENT

The selection of equipment affects the number of workers required for paving operations. The use of transit-mixer trucks rather than paving mixers will usually increase the man-hours required to construct paving. Placing, spreading, and finishing equipment should be sized, whenever possible, to the plant equipment. If the paving equipment cannot handle the plant output, the plant will be idle part of the time waiting for the paving crew. If the plant output is less than the paving equipment can handle, the paving crew will be idle part of the time waiting for the plant. With some equipment, it is possible to cut the crew size and slow the paving operation to the plant capacity. However, this is not always possible and certainly is not efficient. The estimator should know what equipment will be used in order to consider all factors.

ASPHALT

Construction of asphalt paving includes heating asphalt, marking pavement edges, brooming, priming, spreading and finishing asphaltic concrete, rolling asphaltic com - crete, applying seal coat, applying tack coat, loading and hauling chips or gravel, spreading and rolling chips or gravel, and brooming chips or gravel. The time required to spread asphalt concrete with an asphalt finisher and to roll this material is important in only a few cases. Assuming normal operations, an asphalt finisher with the required rollers can spread and compact material faster than an asphalt plant can produce asphalt concrete. Therefore, in this chapter, only the plant output capacity will affect the paving time required for a given job.

CONCRETE

Construction of concrete paving includes placing forms, reinforcements, and dowels; mixing, placing, finishing, and curing concrete; removing and cleaning forms; cutting or forming joints; pouring joint sealer; and installing expansion joints.

CURBS AND WALKS

Either concrete or asphaltic concrete may be used in the construction of curbs and walks. This construction includes placing forms, expansion joints, reinforcement, concrete, or asphaltic concrete. It also ineludes finishing and curing concrete and finishing, priming, and rolling asphaltic concrete.

ESTIMATING TABLES

Use Tables 7-1 through 7-3, pages 7-3 through 7-5, to prepare man-hour estimates for paving, curbs, and walks. These tables do not include the delivery of materials to the jobsite.

EXAMPLES OF TABLE USE

PROBLEM 1

Four miles of 2-inch thick asphaltic concrete (hot-plant mix) 12 feet wide are to be placed on an existing road surface. The plant supporting this operation averages only 80 tons per hour. Assuming there are enough dump trucks to haul the plant mix, estimate the number of hours required for this paving operation.

Solution. Area to be paved = 4 miles x 12 feet x 5,280 feet/mile x 1 square yard/9 square feet = 28,160 square yards.

From Table 7-2 we find that for a thickness of 2 inches and a plant output of 80 tons per hour under adverse conditions, we require 13 hours/ 10,000 square yards.

Then 28,160 square yards x 13 hours/10,000 square yards = 36.6 hours.

Thus, approximately 37 hours are required.

PROBLEM 2

A prime coat of 0.3 gallon/square yard is to be applied to 3 miles of 18-foot-wide roadway. An 800-gallon, truck-mounted distributor with an 18-foot spray bar and a 1/8-inch nozzle will be used. The average distance to the supply point is 12 miles, and it takes 20 minutes to refill the truck. Estimate the number of hours required for this operation.

Solution. From Table 7-2 we find that at an application rate of 0.3 gallon /square yard, the vehicle moves at a speed of 300 feet per minute and the truck empties in 5 minutes.

Thus, 300 feet per minute x 5 minutes = 1,500 linear feet/truck. 3 miles x 5,280 feet/mile = 15,840 feet/ 1,500 = 10 1/2 (approximately 11 truckloads). This results in 55 minutes of actual spray time. However, travel time to and from the supply point and the time to fill the truck must also be calculated. Assuming an average speed to and from the supply point of 30 miles per hour,

Travel time = 12 miles/30 miles per hour x 2 (round trip) = 48 minutes

Load time given as	20 minutes
Unload time	5 minutes
Average cycle time	= 73 minutes

Must make 11 trips x 73 minutes = 803 minutes/60 = 13.4 hours

Table 7-1. Concrete paving

Work element description	Equipment	Unit	Hours per unit
Formwork: place and remove		100 lin ft	5.5 man-hours
Reinforcing mesh and dowels		100 sq ft	2.0 man-hours
Reinforcing steel and dowels		ton	35.0 man-hours
Mix and place	16S or M919	cu yd	0.02 man-hours
Place ready mix		cu yd	0.4 man-hours
Finish, by hand		1,000 sq yd	324 man-hours
Finish, by machine	Transverse concrete finisher	1,000 sq yds	Gear: 1 - 1.0 machine hour 2 - 0.8 machine hour 3 - 0.7 machine hour 4 - 0.5 machine hours
Place premolded expansion joint		1,000 lin ft	15 man-hours
Cut and form longitudinal and transverse joints	Concrete joint saws	1,000 lin ft	20 man-hours
Place joint sealer		1,000 lin ft	12 man-hours
Cure and clean up		1,000 sq ft	15 man-hours

NOTE: Crew workers: 2 to 3 forming, 4 reinforcing, 6 to 8 mixing and placing, 6 finishing, and 4 sawing and sealing joints.

Table 7-2. Asphalt paving

This table differs from others because of the unusually short time required to empty an asphalt distributor tank. The application rate depends on the truck speed. The time required varies only with changes in bar lengths. To determine how much area is covered with one full 800-gallon tank, multiply the speed x spray bar length x time required to empty for the square-foot-area covered. However, the most time-consuming part of this operation, which must be considered, is the travel time to and from the refueling point and the time required to refuel (up to 1/2 hour per tank). For larger trucks (1,500-gallon), multiply the time required by 2.

Work element description	Equipment	Unit	Rate of application gallon/sq yd	Speed ft/min	Time required to empty in minutes: Spray bar length with 1/8" nozzle 12'	18'	24'
Apply prime, tack, or seal coat (crew: operator)	800-gal, truck-mounted asphalt distributor	800 gal	0.1	900	7	5	3.5
			0.2	450	7	5	3.5
			0.3	300	7	5	3.5
			0.5	180	7	5	3.5
			1.0	90	7	5	3.5

			Thickness	Hours per unit asphalt plant output: Adverse 80 tons/hr	Average 120 tons/hr	Favorable 150 tons/hr
Spread and finish asphalt concrete	SA35 asphalt finisher[1]	10,000 sq yd	1"	6.5	4.0	3.5
			2"	13.0	8.0	6.7
			3"	19.0	12.0	10.0

			Hours required
Roll asphalt concrete (crew: operators)	9-14 ton, 3-wheel tandem	10,000 sq yd	3.2 machine hours
	5-8 ton, 2-wheel tandem	10,000 sq yd	3.4 machine hours
	10 ton, 3-wheel roller	10,000 sq yd	3.0 machine hours
	9-tire pneumatic roller	10,000 sq yd	3.1 machine hours

			Width applied
Spread aggregate (crew: 3 workers)	Standard hopper-type spreader	10,000 sq yd	4' 4.2 machine hours 6' 3.3 machine hours 8' 2.5 machine hours
Sweep base prior to spraying	30 drawbar horsepower tractor sweeper	10,000 sq yd	4.0 machine hours
Mix in place and spread 2" bituminous mix (crew: operators)	CAT 130 grader	10,000 sq yd	7.5 machine hours

[1]Maximum recommended operating speed for an SA35 asphalt finisher is about 50 feet per minute. Therefore, 3.5 hours is the minimum time required for a finisher to cover 10,000 square yards. If paving thickness is 3/4 inch or less, use 3.5 hours. (Average crew size = 6 workers on asphalt finisher.)

NOTE: For double-lane roads using one paver, additional time will be required if hot joint construction is desired.

Table 7-3. Paving of curbs and walks

Work element description	Equipment	Unit	Hours per unit
Concrete curbs[1]:			
Formwork - Integral with paving		100 lin ft	10.5 man-hours
- Separate from paving		100 lin ft	22.5 man-hours
Combined curb and gutter		100 lin ft	25.5 man-hours
Place reinforcing		ton	35.0 man-hours
Mix and place concrete	16S mixer	cu yd	3.2 man-hours
Mix and place finish top	M919 concrete mobile	100 sq ft	5.5 man-hours
Cure and clean up		1,000 sq ft	1.0 man-hour
Concrete walks[2]:			
Formwork		100 lin ft	4.5 man-hours
Mix and place (hand)		cu yd	4.5 man-hours
Mix and place	16S mixer	cu yd	3.0 man-hours
Finish	M919 concrete mobile	100 sq ft	5.0 man-hours
Place ready mix		cu yd	1.0 man-hour
Cure and clean up		1,000 sq ft	1.0 man-hour
Asphalt walks[3]:			
Formwork		100 lin ft	4.5 man-hours
Prime coat		100 sq ft	0.7 man-hour
Spread asphalt	From 165-gallon asphalt kettle	100 sq ft	2.9 man-hours
Roll asphalt	Probably nonstandard equipment - any tired vehicle	100 sq ft	0.6 man-hours

Crew workers:
[1]3-4 forming, 2 reinforcing, 4 mixing and placing, and 2 general labor.
[2]3 forming, 6-7 mixing and placing, and 2-3 finishing and general labor.
[3]3 forming, 3-4 manning kettle, 5 placing, and 1 rolling.

CONCRETE CONSTRUCTION CHAPTER 8

TYPES

Concrete construction usually requires forming; reinforcing mixing, placing, and finishing concrete; stripping forms; and curing concrete. In addition, some concrete construction requires fine grading, vapor barriers, expansion joints, cold- weather protection, and placement of embedded anchors in the concrete.

LABOR FOR FORMING

Labor required for forming includes fabrication, handling into place, erection, and oiling; installing form ties, tie wire, struts, chamfer strips, screed guides, bracing, and shoring, erecting runways and scaffolds; and checking forms during placement of concrete. Stripping includes removing, cleaning, and reconditioning forms. Forming is usually computed in square feet of contact surface, which is the area of concrete in direct contact with forms or in linear feet of form length required. Screed guides should be computed as the equivalent form length of an edge form.

LABOR FOR REINFORCED CONCRETE

Concrete is reinforced with steel bars or with welded steel wire mesh which is used for reinforcing slabs, gunite, and precast concrete. In some applications, wire mesh and bars are used in combination for reinforcing. Some tables show both bars and mesh, so that the appropriate man-hours per unit may be used. Reinforcing steel is computed in tons of bars. Reinforcing mesh is computed in square feet of the area.

Labor for reinforcing steel includes handling into place, tying, supporting, and any cutting which becomes necessary at the site such as cutting around embedded materials or cutting stock lengths of straight bars to fit slab dimensions. Labor for wire mesh reinforcing includes handling into place, cutting to fit, tying at overlaps, and pulling up into position during placement of concrete.

LABOR FOR MIXING CONCRETE

Sometimes concrete must be mixed at the job site rather than being delivered in transit mix trucks. Labor for mixing concrete at the jobsite includes loading, measuring, wheeling, and dumping aggregates and cement into the mixer; bringing water to the mixer by truck, hose, pipe, or pump; and operating the mixer.

LABOR FOR PLACING CONCRETE

Handling from the mixer or transit mixer truck to the final position is included in placing concrete. This includes hoisting, spreading, vibrating, and screeding the concrete to grade.

LABOR FOR FINISHING CONCRETE

Concrete finishing includes floating, troweling, and tooling slabs: and filling voids and honeycombs. Pointing and patching includes patching tie holes and removing fins.

LABOR FOR CURING CONCRETE

The term curing includes covering surfaces with curing compound, sand, paper, tarpaulins, burlap, or straw, and keeping as wet as required.

FINE-GRADING PROCESS

The process of fine grading includes bringing in fill or removing excess earth, spreading, leveling, compacting, and sprinkling when necessary.

VAPOR-BARRIER PLACEMENT

The process of placing vapor barrier includes handling and placement, cutting to fit, smoothing as necessary, and sealing the joints.

EXPANSION JOINTS

Placing premolded expansion joints includes handling into place, cutting to fit, placing, and fastening to hold in position until concrete is placed. Labor for placing poured expansion joints includes cleaning the joints of foreign matter, handling material to the melting pot, melting, handling to the joints, pouring the joints, and dusting.

COLD-WEATHER PROTECTION

Several methods are available to provide cold-weather protection for concrete. These include covering the concrete with sand, straw, or paper; heating the mixing water and aggregate; and building enclosures and operating heaters.

ESTIMATING TABLES

Work rates in Tables 8-1 through 8-8, pages 8-3 through 8-6, are based on the use of untrained troops. If crews of different makeup are employed, the work rates must be adjusted accordingly. The tables do not include loading and hauling materials to the jobsite. Table 8-9, page 8-7, contains conversion and waste factors.

Table 8-1. Concrete mixing and placing

Work element description	Unit	Man-hours/unit
Hand mix:		
1 Mix board[1]	cu yd	2.50
16S Mixer:		
Charging with wheelbarrows		
Large crew[2]	cu yd	1.70
Small crew[3]	cu yd	2.00
M919 Concrete Mobile (mixing only)	cu yd	0.10
Placing:[4]		
Placing directly into forms	cu yd	0.40
Using wheelbarrows	cu yd	1.50
Using concrete buggies	cu yd	1.25

[1]Crew: 9 to 10 workers.
[2]Crew (14 workers): 1 operator, 7 with wheelbarrows loading gravel, 4 with wheelbarrows loading sand, and 2 on cement.
[3]Crew (8 workers): 1 operator, 4 with wheelbarrows loading gravel, 2 with wheelbarrows loading sand, and 1 on cement.
[4]Crew (9 workers): 1 leader, 6 wheeling concrete, and 2 dumping and screeding.

Table 8-2. Concrete footings and foundations

Work element description	Unit	Man-hours/unit
Formwork:*		
Column footings (assume 5' x 5' x 1 1/2')	100 sq ft of contact surface	8.5
Wall footings (assume 1 foot deep)	100 sq ft of contact surface	5.5
Footing keys (assume 2" x 4")	100 lin ft	3.2
Reinforcing:		
Loose in footings and piers	ton	13.0
Wired in place (vertical and horizontal)	ton	18.0
Mesh or fabric reinforced	100 sq ft	0.5

*Crew: 2 carpenters and 1 helper.

Table 8-3. Concrete slabs on grade

Work element description	Unit	Man-hours/unit
Fine grade[1]	100 sq ft	1.20
Formwork - edge form[2]	100 lin ft	4.50
Screeds[3]	100 lin ft	1.25
Strip forms ≤ 12-inch[1]	100 lin ft	1.75
Reinforcing[1]		
Bend bars ≤ Number 8	1 ton	10.00
Bend bars > Number 8	1 ton	5.00
Place bars < Number 6	1 ton	15.00
Place bars ≥ Number 6	1 ton	12.00
Wire mesh	100 sq ft	2.00
Finish[1]		
Trowel (includes float)	100 sq ft	2.50
Float	100 sq ft	2.00

[1]Crew: 1 worker.
[2]Crew: 2 carpenters and 1 helper.
[3]Crew: 2 workers.

Table 8-4. Concrete structural slabs

Work element description	Unit	Man-hours/unit
Formwork:		
Flat slab including shoring[1]	100 sq ft of contact surface	12.0
Beam bottom, beam sides[1]	100 sq ft of contact surface	17.5
Edge form ≤ 12 inches[1]	100 lin ft	7.0
Strip forms[2]	100 sq ft	2.0
Reinforcing[2]		
Same as Table 8-3 but hoisting of materials to slab level must be added.		
Finish:		
Same as Table 8-3		
Carborundum stone rub underside	100 sq ft	1.2
Placing:		
Rate of placing will depend on the method of hoisting the concrete.		

[1]Crew: 2 carpenters and 2 helper.
[2]Crew: 1 worker.

Table 8-5. Concrete walls

Work element description		Unit	Man-hours/unit
Formwork:[1]	Wall height (feet)		
Panel wall forms			
Making only	4 - 8	100 sq ft	5.8
Erect and remove	3 - 4	100 sq ft	5.0
Erect and remove	5 - 8	100 sq ft	9.0
Foundation wall forms	4 - 8	100 sq ft	10.5
Foundation wall forms	9 - 12	100 sq ft	14.0
Foundation wall forms	13 - 20	100 sq ft	19.0
Built-in-place forms	4 - 8	100 sq ft	14.5
Built-in-place forms	9 - 12	100 sq ft	19.0
Built-in-place forms	13 - 20	100 sq ft	24.0
Reinforcing:			
Set bars		ton	24.7
Set bars and tie in place		ton	27.5
Cure and cleanup		1,000 sq ft	1.0
Finish (Carborundum stone)		100 sq ft	2.8
Patch tie holes[2]		100 sq ft	1.2

[1]Crew: 2 carpenters and 1 helper.
[2]Crew: 1 finisher and 1 laborer.

Table 8-6. Concrete columns and beams

Work element description	Unit	Man-hours/unit
Formwork:[1]		
Column forms (for example, plywood sheathing)	100 sq ft of contact surface	20.5
Inside beam and girder forms with shoring	100 sq ft of contact surface	21.5
Spandrel beam or lintel forms with shoring	100 sq ft of contact surface	26.7
Reinforcing:		
Set bars	ton	26.5
Set bars and tie in place	ton	29.5
Finish (Carborundum stone)	100 sq ft	2.8
Cure and cleanup	100 sq ft	0.1
Patch tie holes[2]	100 sq ft	1.2

[1]Crew: 2 carpenters and 1 helper.
[2]Crew: 1 finisher and 1 laborer.

Table 8-7. Cast-in-place concrete culverts

Work element description	Unit	Man-hours/unit
Formwork:[1]		
Plywood sheathing and such	100 sq ft of contact surface	26.7
Place reinforcing:		
Set bars and tie in place	ton	31.5
Mix and place concrete[2] (16S mixer)	cu yd	2.7
Place ready-mix concrete[3]	cu yd	2.2
Finish	1,000 sq ft	36.0
Cure and cleanup	1,000 sq ft	1.0
Finish (Carborundum stone)	1,000 sq ft	32.0

[1]Crew: 2 carpenters and 1 helper.
[2]See Table 8-1, page 8-3, for crew.
[3]Typical crew: 1 crew leader; 4 workers erecting strip forms; 3 workers placing reinforcements; 6 to 8 workers placing, spreading, and vibrating concrete; 1 to 3 workers finishing; and 1 to 2 workers cleaning up.

Table 8-8. Cast-in-place concrete and installation of precast catch basins

Work element description	Unit	Man-hours/unit
Cast-in-place units:		
Formwork:[1]		
Plywood sheathing, etc.	100 sq ft of contact surface	26.7
Reinforce:		
Set bars and tie in place	ton	31.5
Place manhole frame and cover	ea	3.0
Place catch basin grate	ea	2.0
Mix and place concrete[2] (16S mixer)	cu yd	3.2
Place ready-mix concrete	cu yd	2.7
Finish	100 sq ft	3.6
Cure and cleanup	ea	1.0
Overall:		
For all sizes of all units	cu yd	15.0
Precast units:		
See Table 6-5, page 6-5, for amount of labor per various sized units.		

[1]Crew: 2 carpenters and 1 helper.
[2]Mix crew: 5 workers on materials feeding mixer and 1 worker dumping concrete into buggies.
[3]Placing crew: 1 crew leader, 3 to 5 workers setting and removing forms, 4 to 7 workers reinforcing, and 3 to 5 workers placing concrete.

Table 8-9. Conversion and waste factors

Material	Conversion	Percent waste
CONCRETE CONSTRUCTION		
Concrete (1:2:4)		
Cement	6.0 sacks/cu yd	10
Fine aggregate	0.5 cu yd/cu yd	10
Coarse aggregate	0.9 cu yd/cu yd	10
Curing compound	0.5 gallon/100 sq ft	10
Forms		
Footings and piers		
2 x 4	1.5 lin ft/sq ft of contact surface	20
2 x 8	0.2 lin ft/sq ft of contact surface	10
2 x 12	0.7 lin ft/sq ft of contact surface	5
Walls and columns		
2 x 4	1.3 lin ft/sq ft of contact surface	20
Plywood (50% reuse)	0.5 sq ft/sq ft of contact surface	5
Beams and suspended slabs		
1 x 6	0.3 lin ft/sq ft of contact surface	5
2 x 4	0.5 lin ft/sq ft of contact surface	20
2 x 10	0.1 lin ft/sq ft of contact surface	10
4 x 4	0.4 lin ft/sq ft of contact surface	5
4 x 6	0.1 lin ft/sq ft of contact surface	5
Plywood	0.5 sq ft/sq ft of contact surface	5
Form oil	0.5 gal/100 sq ft	10
Tie wire	12.0 lb/ton	10
Snap-tie wedges	0.1 ea/sq ft of contact surface	5
Snap ties	0.1 ea/sq ft of contact surface	5
She bolts	0.1 set/sq ft of contact surface	5
Nails (bd ft lumber, sq ft plywood, ordered as thousand bd ft measure)		
6d box	6 lb/thousand bd ft measure	10
8d common	4 lb/thousand bd ft measure	10
16d common	6 lb/thousand bd ft measure	10
20d common	2 lb/thousand bd ft measure	10
6d duplex	4 lb/thousand bd ft measure	10
8d duplex	9 lb/thousand bd ft measure	10
16d duplex	9 lb/thousand bd ft measure	10

CARPENTRY

CHAPTER 9

TYPES

This chapter covers rough carpentry work and installation of flooring finish carpentry, windows, doors, and insulation.

ROUGH CARPENTRY

The term rough carpentry includes measuring, cutting, and installing wood framing, floor joists and sills, cross bridging, wall framing and plates, roof framing and rafters, and rough door bucks. It also includes the installation of wall and roof sheathing and siding.

FLOORING

Flooring includes measuring, cutting, and installing subflooring, finish flooring, and soft tile (asphalt, cork, rubber, and vinyl). It also covers installing building paper under finish floors and adhesive under tile floors. In addition, flooring includes installing building paper under soft tile laid over wood floors.

FINISH CARPENTRY

The work of finish carpentry includes installing baseboard, molding, door and window frames, trim, kitchen cabinets, wooden stairs, closet units, and finish walls. Finish carpentry also includes installation of fastening devices such as plugs, expansion shields, and toggle bolts; blocking for leveling and plumbing and scribing fillers and trim to walls and adjacent pieces.

WINDOWS AND DOORS

The tables in this chapter cover the installation of double-hung and casement windows, jalousies, skylights, wood doors of all types, louvers, screens, and venetian blinds, as well as caulking and weather-stripping. Installation includes drilling for fasteners and installing plugs, expansion shields, toggle bolts, blocking, hinges, locks, and other hardware.

INSULATION

The installation of insulation includes scaffolding when required, fastening insulation into place, and making cutouts in insulation as required.

ESTIMATING TABLES

Tables 9-1 through 9-9, pages 9-3 through 9-8, may be used to prepare detailed man-hour estimates for carpentry. These tables do not include provisions for loading and hauling materials to the job. All tables assume average working conditions in terms of weather, skill, motivation, crew size, accessibility, and the availability of equipment. Tables 9-10 and 9-11, pages 9-8 and 9-9, contain conversion factors.

EXAMPLE OF TABLE USE

Problem. A 24- by 40-foot frame storage shed is to be built as part of a training program. Its interior partitions will be covered on both sides with plasterboard. Ceiling joists will also be covered with plasterboard. Exterior walls will be covered with 4- by 8-foot treated fiberboard and 1 -inch by 8-foot shiplap siding. There will be four interior doors, four exterior doors, and eight double-hung windows, all with plain trim.

The estimates show the following quantities:

Floor joists and sills — 1,300 bd ft
Wall framing and plates — 2,120 bd ft
Ceiling joists — 785 bd ft
Cross bridging — 288 pr
Roof framing and rafters — 2,089 bd ft
Sheathing 4- by 8-foot fiberboard 1,280 sq ft
Roof sheathing 1 inch by 8 foot- 1,410 sq ft
Siding l-inch by 8-foot shiplap – 1,280 sq ft
Subflooring 4- by 8-foot plywood – 960 sq ft
Finish flooring softwood — 960 sq ft
Door frame and trim — 8ea
Window frame and trim — 8ea
Finish walls - plasterboard — 2,240 sq ft
Windows - double hung — 8ea
Doors - single interior — 4 ea
Doors - single exterior — 4ea

Determine the man-hours needed for this project.

Solution. Using Tables 9-1 through 9-11, the following computations are made:

Floor joists and sills, 1.300 thousand-bd-ft measure x 32 man-hours . . . . . = 41.6
Wall framing and plates, 2.120 thousand-bd-ft measure x 56 man-hours . . . . . = 118.7
Ceiling joists, 0.785 thousand-bd-ft measure x 32 man-hours . . . . . = 25.1
Cross bridging, 2.88 hundred pr x 5 man-hours . . . . . = 14.4
Roof framing and rafters, 2.089 thousand-bd-ft measure x 48 man-hours. . . . . = 100.3
Sheathing 4- x 8-ft fiberboard, 1.280 thousand sq ft x 24 man-hours . . . . . = 30.7
Roof sheathing 1 in x 8 ft, 1.410 thousand sq ft x 24 man-hours . . . . . = 33.8
Siding l in x 8ft, l.280 thousand sq ft x 48 man-hours . . . . . = 61.4
Subflooring 4- x 8-ft plywood, 0.96 thousand sq ft x 16 man-hours. . . . . = 15.4
Finish flooring softwood, 0.96 thousand sq ft x 24 man-hours . . . . . = 23.0
Door frame and trim, 8 x 2.5 man-hours . . . . . = 20.0
Window frame and trim, 8 x 3 man-hours . . . . . = 24.0
Finish walls - plasterboard, 2.24 thousand sq ft x 48 man-hours . . . . . = 107,5
Windows - double hung, 8 x 2.5 man-hours . . . . . = 20.0
Doors - single interior, 4 x l.5 man-hours . . . . . = 6.0
Doors - single exterior, 4 x 2 man-hours . . . . . = 8.0
Total man-hours required . . . . . = + 649.9

Use 650 man-hours

Table 9-1. Rough framing

Work element description	Unit	Man-hours/unit
Beams (3 - 2" x 8')	1,000-bd-ft measure	30
Floor joists, sills	1,000-bd-ft measure	25
Bridging	100 pr	5
Wall frames, plates	1,000-bd-ft measure	45
Furring, including plugging	1,000 lin ft	32
Blocking	1,000-bd-ft measure	20
Grounds for plaster	1,000 lin ft	48
Door bucks	ea	3
Ceiling joists	1,000-bd-ft measure	25
Rafters	1,000-bd-ft measure	45

Trusses (span feet)	Each	Man-hours assembly	Man-hours placement
20		1.5	1
30		2.0	8
40		12.0	8
50		20.0	6*
60		24.0	6*
80		32.0	6*

Typical crew: 1 leader and 8 workers. Minimum crew: 1 leader and 2 workers.

*Assumes the use of an organizational crane, 1 operator, 1 oiler, and 2 or 3 workers on guylines.

Table 9-2. Sheathing and siding

Work element description	Unit	Man-hours/unit
Wall sheathing	1,000 sq ft	
Building paper		8
Tongue and groove		24
Plywood		16
Fiberboard		16
Roof decking	1,000 sq ft	
Tongue and groove		32
Plywood		20
Siding	1,000 sq ft	
Plywood		16
Corrugated asbestos		32
Drop siding		32
Narrow bevel		48
Shingles		40

Typical crew: 1 leader and 8 workers.

Table 9-3. Insulation

Work element description	Unit	Man-hours/unit
Thermal	1,000 sq ft	
Board		
Floor*		32
Wall		8
Ceiling		24
Roof		24
Rock wool		
Loose		16
Batts		12
Foil alone		8
Rigid foam		24
Acoustic	1,000 sq ft	
Strip		24
Quilt		8

Typical crew: 1 leader and 4 workers.
*Install vermin shield.

Table 9-4. Finish carpentry

Work element description	Unit	Man-hours/unit
Walls	1,000 sq ft	
Plywood		32.0
Plasterboard (includes tape)		48.0
Ceilings	1,000 sq ft	
Wood		48.0
Plasterboard (includes tape*)		64.0
Cemented tile		32.0
Panel with suspension		72.0
Baseboard (2 member)	1,000 lin ft	72.0
Molding (chair)	1,000 lin ft	48.0
Door frame, trim	ea	2.5
Sliding door with pocket	ea	8.0
Window frame, trim	ea	3.0
Installing prefab closets	ea	16.0
Setting kitchen cabinets	ea	1.5
Shelving	1,000 sq ft	64.0
Chalkboard (complete)	1,000 sq ft	110.0
Stairs		
Closed stringer, built on job	story	16.0
Closed stringer, prefab	story	8.0
Open stringer	story	24.0

NOTES:
1. Typical crew: 1 leader and 3 to 8 workers.
2. For small rooms, increase time required for wall- and ceiling-board installation by 30 to 50 percent.

*Includes furring strips when necessary.

Table 9-5. Door installation

Work element description	Unit	Man-hours/unit
WOOD DOORS AND FRAMES		
Door frames and trim		
Single exterior	ea	3
Double exterior	ea	3
Single interior	ea	3
Double interior	ea	4
Sliding door frame	ea	4
Door: fit, hang, and lock		
Single exterior	ea	5
Double exterior	ea	8
Single interior	ea	5
Double interior	ea	7
Screen doors	ea	2
METAL DOORS		
Single	ea	6
Double	ea	9
MISCELLANEOUS DOORS COMPLETE WITH TRIM AND HARDWARE		
Rolling, manual-operated	ea	29
Rolling, motor-operated	ea	36
Sliding, manual-operated	ea	20
Sliding, motor-operated	ea	25
Sliding, fire	ea	19
Garage doors		
Wood 16' x 7'	ea	8
Aluminum 16' x 7'	ea	10
Scuttles	ea	10
CAULKING	1,000 lin ft	5

NOTES:
1. Includes jambs, stops, casings, and weather stripping.
2. Does not include sills or thresholds.
3. On wood doors, if power planes, hinge butt routers, and lock mortises are used, deduct 25 percent from installation time.

Table 9-6. Flooring

Work element description	Unit	Man-hours/unit
Wood floors	1,000 sq ft	
Subfloor		
Tongue and groove		24
Plywood		16
Finish floor		
Softwood		24
Hardwood		32
Soft tile	1,000 sq ft	
Cemented		24
Nailed		32
Linoleum	1,000 sq ft	32

Typical flooring crew: 1 leader and 4 workers.

Table 9-7. Window installation

Work element description	Unit	Man-hours/unit
Wood windows		
Double hung	ea	4
Casement, single	ea	4
Fixed wood sash	ea	3
Jalousie	ea	2
Skylights	ea	8
Louvers	ea	5
Screens	ea	2
Venetian blinds	ea	2
Metal windows		
Double hung	ea	2
Casement	ea	2
Commercial projected	ea	2
Skylights	ea	9
Weather stripping	ea	3
Caulking	1,000 lin ft	

NOTES:
1. Suggested crew size: Two to six workers.
2. Installation includes drilling fasteners, expansion sills, installing plugs, toggle blocking, hinges, locks, and other hardware.
3. For special panic-device doors, add three hours for single doors and four hours for double doors.

Table 9-8. Interior painting

Work element description	Unit	Man-hours/unit
Brush painting, per coat		
Wood flat work	1,000 sq ft	11
Doors and windows, area	1,000 sq ft	12
Trim	1,000 sq ft	9
Plaster, sand finish	1,000 sq ft	10
Plaster, smooth finish	1,000 sq ft	10
Plasterboard	1,000 sq ft	8
Metal	1,000 sq ft	12
Masonry	1,000 sq ft	12
Varnish flat work	1,000 sq ft	9
Enamel flat work	1,000 sq ft	7
Enamel trim	1,000 sq ft	13
Roller painting, per coat		
Wood flat work	1,000 sq ft	7
Doors	1,000 sq ft	9
Plaster, sand finish	1,000 sq ft	4
Plaster, smooth finish	1,000 sq ft	5
Plasterboard	1,000 sq ft	5
Metal	1,000 sq ft	7
Masonry	1,000 sq ft	5
Spray painting, per coat		4
Wood flat work	1,000 sq ft	4
Plaster, plasterboard	1,000 sq ft	5
Metal	1,000 sq ft	4
Masonry	1,000 sq ft	
Taping flushing, joints, sanding, plasterboard	1,000 lin ft of joint	54
Sanding wood floors	1,000 sq ft	12
Finish wood floors, sealer, and 1 finish coat	1,000 sq ft	21

NOTE: The painting of interior surfaces includes surface preparation, mixing paint materials, and application of paint to surface.

Table 9-9. Exterior painting

Work element description	Unit	Man-hours/unit
Brush painting, per coat		
Wood siding	1,000 sq ft	12
Wood doors and windows, area of opening	1,000 sq ft	12
Trim	1,000 lin ft	11
Steel sash, area of opening	1,000 sq ft	9
Flat metal	1,000 sq ft	12
Metal roofing and siding	1,000 sq ft	10
Masonry	1,000 sq ft	12
Roller painting, per coat		
Masonry	1,000 sq ft	10
Flat metal	1,000 sq ft	9
Doors	1,000 sq ft	9
Spray painting, per coat		
Wood siding	1,000 sq ft	5
Doors	1,000 sq ft	9
Masonry	1,000 sq ft	8
Flat metal	1,000 sq ft	7
Metal roofing and siding	1,000 sq ft	8
Airfield lines and numbers, including glass beads	1,000 sq ft	14
Cementitious paint, including curing	1,000 sq ft	16
Sandblasting steel	1,000 sq ft	66
Wire-brush cleaning of steel	1,000 sq ft	38
Clean and spray waterproofing on masonry	1,000 sq ft	14

NOTES:
1. Suggested crew size: 1 to 5 workers spraying and 1 to 5 workers tending (one worker is used to mix and prepare paint for larger crews).
2. Surface preparation for exterior painting includes removing mill scale from metal surfaces with wire brushes or by sandblasting, removing dust with brush or cloth, removing oil and grease, masking and taping adjacent surfaces, and removing masking and taping. Sometimes it is necessary to lightly sand between coats or size and fill porous materials before painting, all of which is surface preparation.
3. Labor for erected scaffolding is not included.

Table 9-10. Number of studs for partitions, floor joists, and ceiling joists

Distance on center	Multiply length of partition by	Add
12 in	1.00	1
16 in	0.75	1
24 in	0.50	1

NOTE: Add for top and bottom plates on stud walls.

Table 9-11. Number of wood joists required for floor and spacing

Length of span (feet)	Number of joists required		
	Spaced 12" apart	Spaced 16" apart	Spaced 24" apart
6	7	6	4
7	8	6	5
8	9	7	5
9	10	8	6
10	11	9	6
11	12	9	7
12	13	10	7
13	14	11	8
14	15	12	8
15	16	12	9
16	17	13	9
17	18	14	10
18	19	15	10
19	20	15	11
20	21	16	11
21	22	17	12
22	23	18	12
23	24	18	13
24	25	19	13
25	26	20	14
26	27	21	14
27	28	21	15
28	29	22	15
29	30	23	16
30	31	24	16
31	32	24	17
32	33	25	17
33	34	26	18
34	35	27	18
35	36	27	19
40	41	31	21

MASONRY CHAPTER 10

TYPES

Masonry covers installing brick, concrete block, mortar-bound rubble, ceramic tile, quarry tile, structural tile (glazed or face), and also lathing and plastering.

BRICK AND CONCRETE BLOCK

Labor for the installation of brick and concrete block includes mixing mortar, carrying materials to the mason, hoisting materials, and laying brick and block. It also includes tooling joints, erecting and dismantling scaffold, sawing block, and culling brick and block. Labor for this type of masonry includes cleaning brick and block in place.

MORTAR-BOUND RUBBLE

The installation of mortar-bound rubble includes labor for mixing mortar, rough-cutting stone, carrying mortar and rubble to the mason, hoisting materials, and laying rubble. Tooling and pointing joints, erecting and dismantling scaffold, and cleaning rubble in place are also part of the installation.

CERAMIC AND QUARRY TILE

The installation of ceramic and quarry tile includes mixing mortar for bed coat and joints, carrying mortar and tile to the tile setter, spreading bed coat, cutting tile, and setting tile. Labor estimates should also include slushing and finishing joints, cleaning tile in place, and erecting and dismantling scaffold.

STRUCTURAL TILE

The installation of structural face tile and glazed structural tile units includes mixng mortar, carrying mortar and tile to the mason, hoisting materials, laying tile, tooling joints, erecting and dismantling scaffold, cutting tile, and cleaning tile in place.

LATH AND PLASTER

Labor for lathing and plastering includes handling material into place; hoisting materials; cutting and installing hanging wires and straps; cutting and fastening lathing

channels, angles, beads, and moldings; and installing furring strips, metal lath, and gypsum lath. Labor also includes mixing plaster, installing and finishing plaster, erecting and dismantling scaffold, and curing and drying plaster.

ESTIMATING TABLES

Unit masonry Tables 10-1 through 10-3 include inking mortar, carrying materials, culling, cutting, hoisting, laying masonry, tooling joints, and cleaning work in place. For lathing (Table 10-4, page 10-4), labor ineludes installing required metal fastenings and furring. Estimates for plastering (Table 10-5, page 10-4) include mixing, hoisting, finishing, and curing. Allowances are made for erecting and dismantling scaffolds in all cases. Estimates do not provide for loading and hauling material to the jobsite. Tables 10-6 and 10-7, pages 10-5 and 10-6, contain conversion actors.

EXAMPLE OF TABLE USE

Problem. Twenty housing units are to be built in Germany when weather is generally favorable for construction. Estimate the number of working days it will take to com - plete the project. Material estimates are as follows:

8-inch concrete block —	20,000 sq ft
Acid cleaning block	20,000 sq ft
6-inch quarry tile	1,000 sq ft
Tile base (6-inch)	500 lin ft
Acid cleaning tile	1,250 sq ft
Glass block	1,000 sq ft
Metal lath - walls (metal studs)	25,000 sq ft
Metal lath - ceiling (wood joists)	10,000 sq ft
Metal lath - base	2,500 lin ft
Corner bead	2,500 lin ft
Lath at openings	4,000 lin ft
Plastering walls (2 coats) —	25,000 sq ft
Plastering walls (plain finish) –	10,000 sq ft
Scaffolding	1 story - 8 crews

Solution. Labor is mostly inexperienced, so the man-hours/unit are figured at 30 percent above tables.

	Units	x	Man-hours/unit	= Subtotal
Laying block	20. 0		143	2,860
Cleaning block	20. 0		33	660
Laying tile: Floor	1.0		208	208
Base	0.5		299	150
Cleaning tile	1.25		13	16
Glass block	1.0		325	325
Metal lath: Walls	25.0		52	1,300
Ceiling	10.0		13	130
Base	2.5		46	115
Corner	2.5		46	115
Openings	4.0		91	364
Plastering: Walls	25.0		31	775
Ceilings	10.0		55	550
Scaffold	8.0		26	208
Total man-hours:				7,776

Assuming an 8-hour workday, work requires 972 man-days. An engineer company consisting of 60 laborers, using organic equipment, could complete the project in 16.2 (972 /60) working days.

Table 10-1. Structural tile

Work element description	Unit	Man-hours/unit
Backup tile	1,000 sq ft	
4" wall		100
8" wall		100
12" wall		140
Glazed tile	1,000 sq ft	
4" wall		230
8" wall		280
Glass and terra-cotta block, complete	1,000 sq ft	200
Acid cleaning tile	1,000 sq ft	10
Typical tile crew: 1 leader and 6 workers.		

Table 10-2. Brick, concrete block, and mortar-bound rubble

Work element description	Unit	Man-hours/unit
Common brick	1,000 sq ft	
8" wall		150
12" wall		200
16" wall		300
Acid cleaning brick	1,000 sq ft	20
Concrete block	1,000 sq ft	
4" wall		76
8" wall		100
12" wall		150
Acid cleaning block	1,000 sq ft	25
Mortar-bound rubble, complete	cu yd	30
Erect and dismantle tubular scaffold	story - 1 crew	20
Typical crew: 1 leader and 6 workers for masonry; 1 leader and 3 workers for scaffolding.		

Table 10-3. Ceramic and quarry tile

Work element description	Unit	Man-hours/unit
Floors	1,000 sq ft	
Ceramic		
Paper-backed		160
Unmounted		240
Quarry		
4" square		200
6" square		160
9" square		80
Walls (includes preparation of surface)	1,000 sq ft	250
Base	1,000 lin ft	230
Cap	1,000 lin ft	190
Typical tile crew: 1 leader and 3 workers.		

Table 10-4. Lathing

Work element description	Unit	Man-hours/unit
Walls	1,000 sq ft	
Wood lath		10
Metal lath		10
Wood studs, 2" solid partition		35
Metal studs, 2 sides		25
Ceiling	1,000 sq ft	
Wood joists		10
Suspended		30
Base	1,000 lin ft	
Wood		30
Metal		35
Corner bead	1,000 lin ft	35
Moldings at openings	1,000 lin ft	70

Typical lathing crew: 1 leader and 3 workers.

Table 10-5. Plastering

Work element description	Unit	Man-hours/unit
Interior walls	1,000 sq ft	
2 coats		21
3 coats		21
2" solid partition		70
Metal studs, 2 sides		40
Ceiling (3 coats)	1,000 sq ft	42*
Exterior, stucco	1,000 sq ft	45

Typical plastering crew: 1 leader and 6 workers.
*Add 8 man-hours/unit for sand finish.

Table 10-6. Masonry conversion units

Material description	Conversion unit	Waste %	Unit
Masonry units			
8-inch blocks	0.89 sq ft per block		
1. Full stretcher	8" x 8" x 16"	10 ea	ea
2. Half stretcher	8" x 8" x 8"	10 ea	ea
3. Corner block	8" x 8" x 16"	10 ea	ea
4. Full jamb	8" x 8" x 16"	10 ea	ea
5. Half jamb	8" x 8" x 8"	10 ea	ea
6-inch blocks	0.89 sq ft per block		
1. Full stretcher	6" x 8" x 16"	10 ea	ea
2. Half stretcher	6" x 8" x 8"	10 ea	ea
3. Corner	6" x 8" x 16"	10 ea	ea
4. Full jamb	6" x 8" x 16"	10 ea	ea
5. Half jamb	6" x 8" x 8"	10 ea	ea
NOTE: All specials requiring field cutting shall be ordered as full-size blocks.			
Mortar materials. (For 1 to 3 mix and 8" x 16" blocks)			
Cement, portland, type I (includes 20% waste)			
1. 1/4-inch joint	0.80 cu ft/100 sq ft wall	----	sack
2. 3/8-inch joint	1.10 cu ft/100 sq ft wall	----	sack
3. 1/2-inch joint	1.40 cu ft/100 sq ft wall	----	sack
Lime, hydrated, dry type "M" (includes 20% waste)			
NOTE: 1 sack line = 1 cubic foot.			
1. 1/4-inch joint	0.60 cu ft/100 sq ft wall	----	sack
2. 3/8-inch joint	0.81 cu ft/100 sq ft wall	----	sack
3. 1/2-inch joint	1.05 cu ft/100 sq ft wall	----	sack
Masonry wash materials.			
Muriatic acid	10 lb/100 sq ft surface	10 lb	lb
Soap, powdered, navy type	2 lb/100 sq ft surface	10 lb	lb
Core fill materials. (Conversion units for RST spaced 24" OC.)			
Cement, portland, type I			
1. 8- and 6-inch walls	3 sacks/100 sq ft wall	10 sacks	sack
2. 4-inch walls	2 sacks/100 sq ft wall	10 sacks	sack

NOTES:
1. Volume of 1 cell in an 8- by 8-inch block is equal to 1/8 cubic foot.
2. 7 sacks/cubic yard.

Table 10-7. Material weights and measures

Material	Length (inches)	Width (inches)	Thickness (inches)	Weight lb/each	Weight lb/barrel	Weight lb/cu ft	Weight lb/cu yd	Weight tons/1,000
Asbestos						110 to 120		
Brick, common	8 1/4	4	2 1/2	5.40				2.70
Brick, fire, std.	9	4 1/2	2 1/2	7.00				3.50
Brick, hard	8 1/2	4 1/4	2 1/4	6.48				3.24
Brick, soft	8 1/4	4	2 1/4	4.32				2.60
Cement, bag				94.00	376			
Clay, dry						63 to 95	1,700 to 2,295	
Clay, fire						130	3,500	
Clay, wet						120 to 140	2,970 to 3,200	

ROOFING CHAPTER 11

TYPES

The types of roofing included in this chapter are built-up, roll, shingle, metal, asbestos-cement, and tile. Table 11-1, page 11-2, includes melting asphalt, laying felt, mopping, and laying gravel for built-up roofing. Table 11-2, page 11-2, includes cleaning deck, applying prime coat, and laying rolls for roll roofing. Table 11-3, page 11-3, includes placing and nailing shingle roofing. Table 11-4, page 11-3, includes placing, caulking, drilling, and fastening materials for metal, asbestos-cement, and tile roofing.

ESTIMATING TABLES

Tables 11-1 through 11-5, pages 11-2 through 11-4, may be used in preparing detailed-man-hour estimates for roofing. These tables include allowances for unloading, hoisting, and storing materials at the construction site. They do not include hours needed for loading and hauling materials to the job site.

EXAMPLE OF TABLE USE

Problem. A warehouse is to be built in a tropical area. Heavy rains require a 4-ply built-up roof to be applied during the dry season. Estimate the number of man-hours needed to build the roof, based on the following material estimate:

Roof, 4-ply built-up	5,000 Sq ft
Roof insulation	5,000 Sq ft
Flashing	300 lin ft

Solution. Because crews are inexperienced, the man-hours/unit are increased 30 percent over the figures given in Table 11-1.

	Unit	x	Man-hours/unit	= Subtotal
Roof, 4-ply built-up . .	5		33	165
Insulation	5		33	165
Flashing	0.3		78	23
Total man-hours				353

Table 11-1. Built-up roofing, insulation, and flashing

Work element description	Unit	Man-hours/unit
Roofing	1,000 sq ft	
2 ply		12
3 ply		20
4 ply		25
5 ply		30
Insulation	1,000 sq ft	25
Flashing	1,000 sq ft	60
Typical crew: 1 leader and 6 workers.		

Table 11-2. Roll roofing

Work element description	Unit	Man-hours/unit
Paper (plain) and felt	1,000 sq ft	7
Asphaltic aluminum (including primer)	1,000 sq ft	18
Canvas (including 2 coats paint)	1,000 sq ft	25
Typical crew: 1 leader and 6 workers.		

Table 11-3. Shingle roofing

Work element description	Unit	Man-hours/unit
Wood	1,000 sq ft	35
Slate	1,000 sq ft	55
Metal	1,000 sq ft	50
Asphalt	1,000 sq ft	30
Typical crew size: 1 leader and 4 workers.		

Table 11-4. Metal, asbestos-cement, and tile roofing (pitch at least 3 inches/foot)

Work element description	Unit	Man-hours/unit
Metal	1,000 sq ft	
Corrugated and V-crimp		
Wood purlins		18
Metal purlins		36
Sheet (seamed)		60
Asbestos-cement	1,000 sq ft	
Wood purlins		35
Metal purlins		45
Tile	1,000 sq ft	
Clay		55
Metal		60
Typical crew: 1 leader and 5 workers.		

Table 11-5. Waterproofing

Work element description	Unit	Man-hours/unit
Built-up roofing		
3-ply	square	4
4-ply	square	5
5-ply	square	6
Roof insulation	square	
Asphaltic aluminum roofing		
Asphaltic primer	square	1.5
Asphaltic aluminum	square	1.5
Shingle roofing (including felt paper)		
Asphalt shingles	square	5
Wood shingles	square	7
Asbestos shingles	square	9
Corrugated roofing		
Corrugated or V-crimp metal		
On wood purlins	square	3.5
On metal framing	square	7
Corrugated asbestos, cement		
On wood purlins	square	6
On metal framing	square	8

Suggested crew size: 4 to 12 workers.

NOTES:
1. All estimates are based on 50 percent experienced crews with good supervision.
2. Insulation installation should not exceed that which can be covered with roofing the same day.
3. For below-grade waterproofing, use 75 percent of the figures listed.
4. Crew size will be dictated by safety, equipment used, scope of work, and number of operations involved.

ELECTRICAL WORK

CHAPTER 12

TYPES

Electrical work discussed in this chapter includes construction of electrical distribution lines, outdoor lighting, and underground power systems. It also includes installation of interior electrical services, transformers, and substation equipment.

ELECTRICAL LINE WORK

Labor includes unloading materials, excavating, installing crossarms and insulators, setting poles, backfilling, and stringing and sagging wire. It also includes installing and connecting transformers, switches, breakers, capacitors, and regulators.

OUTDOOR LIGHTING

Street lights, security lights, airfield lights, and athletic-field lights are types of outdoor lighting. Labor for installation includes digging foundations, setting poles, backfilling, installing standards and light fixtures, stringing wire, laying buried cable, installing duct, encasing duct in concrete, and pulling cable. It also includes installing control devices, lamps, control vaults, and transformers.

UNDERGROUND POWER SYSTEM

Construction of underground power systems includes excavating, installing ducts, encasing ducts with concrete, backfilling, and compacting. It also includes pulling cable, constructing transformer vaults, installing transformers, and constructing manholes and handholes. Construction time depends on soil and weather conditions.

INTERIOR ELECTRICAL ROUGH IN

Roughing-in interior electric includes installing service mains, switches, panels, conduits, fittings, outlet boxes, nonmetallic cable, armored cable, transformers, and motor control centers. It also includes pulling cable through conduit and splicing in electrical boxes.

INTERIOR ELECTRICAL FINISH AND TRIM

Finishing and trimming interior electric includes installing and connecting receptacles, switches, light fixtures, light-duty devices, heavy-duty utility devices, controls, and appliances. It also includes circuit testing.

TRANSFORMERS AND SUBSTATION EQUIPMENT

Installation of transformers and substation equipment includes unloading the equipment, moving it into position, leveling, plumbing, fastening, trimming, and connecting the equipment.

ESTIMATING TABLES

Tables 12-1 through 12-9, pages 12-3 through 12-10, may be used in preparing detailed man-hour estimates for electrical construction. The tables do not include provisions for loading and hauling equipment and materials to the jobsite. Man-hours units are given in these tables for average working conditions. To apply these tables to a particular situation, the weather condition, skill and experience of the workers, time allotted for completion, size of crew, types of material used, and types of equipment must be considered.

EXAMPLE OF TABLE USE

To make an estimate of man-hours for electrical work using the tables in this chapter, follow the procedure in the example below.

Problem. Interior electrical work is to be performed in a two-family housing unit. The work element estimate shows the following quantities of work to be performed:

Electrical service main, 100 amperes	1 ea
Electric panels, 8-circuit	2 ea
Conduit and boxes, 1 1/4 inches and smaller	1,100 lin ft
Pull and splice wire, No. 10 and smaller	2,200 lin ft
Pull and splice wire, No. 8 and larger	160 lin ft
Receptacles and switches	30 ea
Incandescent fixtures	14 ea
Attic exhaust fans	2 ea
Water heater	2 ea

Solution. Because the project is located in an area of moderate rainfall and most of the crew members are experienced workers, subtract 15 percent from the man-hour estimates. Referring to Tables 12-5, 12-6, and 12-7, compute the man-hours per unit at 85 percent as follows:

Electric service main, 100 amperes	12.0 x 0.85	=	10.2 ea
Electric panels, 8-circuit	9.0 x 0.85	=	7.65 ea
Conduit and boxes, 1 1/4 inches and smaller	250.0 x 0.85	=	212.5/1,000 lin ft
Pull and splice wire, No. 10 and smaller	18.0 x 0.85	=	15.3/1,000 lin ft
Pull and splice wire, No. 8 and larger	56.0 x 0.85	=	47.6/ 1,000 lin ft
Receptacles and switches	0.2 x 0.85	=	0.17 ea
Incandescent fixtures	0.5 x 0.85	=	0.43 ea
Attic exhaust fans	2.0 x 0.85	=	1.7 ea
Water heater	1.5 x 0.85	=	1.28 ea

Using the preceding units, compute man-hours for electrical work.

Rough in:	Service main: 1 ea x 10.20 man-hours ea	= 0.2
	Panels: 2 ea x 7.65 man-hours ea	= 15.3
	Conduit: 1.1 x 1,000 lin ft x 212.5 man-hours/ l,000 lin ft	= 233.8
	Wire, No. 10: 2.2 x 1,000 lin ft x 15.3 man-hours/ 1,000 lin ft	= 33.7
	Wire, No. 8: 0.16 x 1,000 lin ft x 47.6 man-hours/ 1,000 lin ft	= 7.6
Total man-hours for rough-in		= 300.6
Finish and trim:	Receptacles and switches: 30 ea x 0.17 man-hours/ea	= 5.1
	Fixtures: 14 ea x 0.43 man-hours/ea	= 6.0
	Fans: 2 ea x 1.7 man-hours/ea	= 3.4
	Water heater: 2 ea x 1.28 man-hours/ea	= 2.6
Total man-hours for finish and trim		= 17.1

Total electrical work in one two-family housing unit: 300.6 + 17.1 = 318 man-hours

Table 12-1. Electrical line work

Work element description	Unit	Man-hours/unit
Set poles, including guying, hardware and grounding:		
Line poles	ea	3
Corner poles	ea	4
H-pole and transformer platform	ea	9
String wire including connections:		
No. 6 to No. 1 wire	1,000 lin ft	40
No. 1/0 to No. 4/0 wire	1,000 lin ft	96
Set pole-mounted transformers:		
50 kilovolt-amperes	ea	2
25 to 37.5 kilovolt-amperes 10	ea	2
5 to 15 kilovolt-amperes 10	ea	2
Pole top air break switches	ea	2
Disconnect switches	ea	2
Guying and tying	1,000 lin ft	100
Capacitors:		
Single-phase (10)	ea	1.2
Three-phase (30)	ea	3
Regulators:		
12.5 to 25 kilovolt-amperes 10 pole-mounted	ea	1.5
12.5 to 37.5 kilovolt-amperes 30 platform-mounted	ea	30
50 to 75 kilovolt-amperes 30 platform-mounted	ea	50
100 to 125 kilovolt-amperes 30 platform-mounted	ea	70
For quick estimates:		
Line work complete	1,000 lin ft	200

Typical crew: 1 crew leader, 4 line persons, 2 splicers, 2 ground persons, 1 truck driver, and 1 crane operator.
Equipment: Compressor, pneumatic air-tamper, crane, truck, tractor with a winch drum and cable, stringing blocks and slings, bolt cutters, grips, chains, cable, and rope.
NOTE: Not included in these estimates are man-hours required for hole-digging.

Table 12-2. Street, security, and athletic-field lighting

Work element description	Unit	Man-hours/unit
Install foundations for lights standards		
Street lighting	ea	19.2
Security lighting	ea	19.2
Athletic-field lighting	not applicable	not applicable
Install lighting standards including wiring:		
Street lighting	ea	16
Security lighting	ea	16
Athletic-field lighting	not applicable	not applicable
Setting poles:		
Street lighting	ea	24.8
Security lighting	ea	24.8
Athletic-field lighting	ea	32
Trench excavation for burial cable:		
Hand	1,000 lin ft	640
Machine	1,000 lin ft	40
Install fixtures, including wiring	ea	12
Install direct burial cable including risers and splicing when applicable	1,000 lin ft	48
Install overhead cable, including splicing	1,000 lin ft	40
Install lighting transformer		
10 to 20 kilovolt-amperes	ea	16
25 to 30 kilovolt-amperes	ea	24
Install control devices	ea	8
Install lamps	ea	0.64
For quick estimates:		
Street lighting, complete	1,000 lin ft	256
Security lighting, complete	1,000 lin ft	360
Athletic-field lighting, complete	luminaire	5.2

Typical crew: 1 crew leader, 2 workers excavating, 4 workers setting poles and installing fixtures, 1 truck driver, and 1 crane operator.
Equipment: Crane, truck, compressor, pneumatic air-tamper, and ordinary hand-tools.

Table 12-3. Airfield lighting

Work element description	Unit	Man-hours/unit
Install burial cable, including splicing	1,000 lin ft	48
Trenching for ducts or cable, including backfill and compaction:		
Hand	cu yd	8.8
Machine	1,000 cu yd	560
Install duct	1,000 lin ft	272
Encase duct in concrete	cu yd	3.2
Pull cable, including splicing	1,000 lin ft	64
Install lighting fixtures including wiring	ea	12
Install control devices	ea	8
Install control vaults	ea	192
For quick estimates:		
Airfield lighting complete using machine excavation:		
Direct burial cable	1,000 lin ft	216
Duct system (2-way)	1,000 lin ft	976

Typical crew: 1 crew leader, 2 workers trenching, 3 workers placing concrete, 5 workers pulling and splicing cable, 2 workers installing fixtures and control devices, and 1 truck driver.
Equipment: Ditcher, air compressor with tamper, backhoe, truck soldering outfits, fishing wire, and handlines.

Table 12-4. Underground power system

Work element description	Unit	Man-hours/unit
Trenching for ducts, including backfill and compaction:		
Machine	1,000 cu yd	560
Hand	cu yd	8.8
Install ducts, including risers	1,000 lin ft	288
Encase ducts with concrete	cu yd	3.2
Pull cable, including splicing	1,000 lin ft	112
Install transformers:		
100 kilovolt-amperes dry type	ea	80
167 kilovolt-amperes to 500 kilovolt-amperes dry type	ea	136
Transformer vaults	ea	See Table 8-8, page 8-6
Manholes and/or handholes	ea	See Table 8-8, page 8-6
For quick estimates (ducts complete, including machine excavation, backfill, and concrete, encasement):		
2-way ducts	1,000 lin ft	792
4-way ducts	1,000 lin ft	1,496
6-way ducts	1,000 lin ft	2,208
9-way ducts	1,000 lin ft	3,248
Underground power system, complete*	1,000 lin ft	2,400

Typical crew: 1 crew leader, 2 workers excavating, 3 workers placing concrete, 5 workers pulling and splicing, 1 truck driver, and 4 to 8 workers on transformer installation.
*Includes complete duct installation, pulling and splicing cable, manholes, handholes, transformer vaults, and transformers.

Table 12-5. Electrical rough in—housing and barracks

Work element description	Unit	Man-hours/unit
Electric service main:		
30-amperes service	ea	5
60-amperes service	ea	7
100-amperes service	ea	9
Electric panels:		
8-circuit	ea	8
16-circuit	ea	15
Install conduits, fittings, and outlet boxes:		
1 1/4 in and smaller	1,000 lin ft	250
1 1/2 in and larger	1,000 lin ft	420
Pull and splice wire:		
No. 10 and smaller	1,000 lin ft	18
No. 8 and larger	1,000 lin ft	56
Install nonmetallic cable, fittings, and outlet boxes:		
No. 10 and smaller	1,000 lin ft	28
No. 8 and larger	1,000 lin ft	48
Install armored cable, fittings, and outlet boxes:		
No. 10 and smaller	1,000 lin ft	55
No. 8 and larger	1,000 lin ft	66

Typical crew: 1 crew leader, 3 workers on conduit installation, and 4 workers on wire pulling and splicing.
Equipment: Heavy rigid conduit work will require pipe cutters, hacksaws, threading tools, reamers, and other small tools needed for conduit work. Light rigid conduit work will not require threading tools. Other small tools needed will include hand and electric drills, saws, hammers, chisels, gasoline torches, soldering outfits, fishing wire, pliers, and handlines. Ladders, stepladders, sawhorses, and planks may be needed for scaffolding.

NOTES:
1. A predominance of small-size conduit will create a more favorable condition than a big percentage of large-size conduit in either conduit item.
2. A large number of short-length circuits would tend to create unfavorable conditions and would increase the man-hours required to pull and splice each 1,000 linear feet of cable. Similarly a predominance of very short conduit runs would increase the number of man-hours required per 1,000 linear feet.

Table 12-6. Electrical finish and trim—housing and barracks

Work element description	Unit	Man-hours/unit
Install receptacle and switches	ea	0.2
Install incandescent fixtures	ea	0.5
Install fluorescent fixtures	ea	1.0
Install appliances:*		
Dryers, hot water heater, ranges	ea	1.5
Small space heaters	ea	1.0
Air conditioning units 1 ton and smaller	ea	3.0
Exhaust fans	ea	2.0
Circuit testing	circuit	0.5

Typical crew: 1 crew leader and 2 to 4 workers.
Equipment: Ordinary hand-tools and ladder if needed.
*Based on standard size appliances.

Table 12-7. Electrical rough in—industrial

Work element description	Unit	Man-hours/unit
Electric service main:		
60-amperes service 340W	ea	11.2
100-amperes service 340W	ea	12.0
200-amperes service 340W	ea	14.0
Electric panels:		
8-circuit	ea	9.0
16-circuit	ea	16.0
24-circuit	ea	19.0
30-circuit	ea	21.0
Install conduit, fittings, and outlet boxes		
1 1/4 inches and smaller	1,000 lin ft	250.0
1 1/2 inches and larger	1,000 lin ft	420.0
Install cable, including splices:		
No. 10 and smaller	1,000 lin ft	28.0
No. 8 and larger	1,000 lin ft	48.0
Install nonmetallic cable, fittings, and outlet boxes:		
No. 10 and smaller	1,000 lin ft	55.0
No. 8 and larger	1,000 lin ft	66.0
Install metallic cable, fittings, and outlet boxes:		
No. 10 and smaller	1,000 lin ft	64.0
No. 8 and larger	1,000 lin ft	96.0
Transformers, floor-mounted[1]:		
1 to 3 kilovolt-amperes	ea	8.0
5 to 10 kilovolt-amperes	ea	17.6
15 to 25 kilovolt-amperes	ea	38.4
37.5 to 50 kilovolt-amperes	ea	76.8
Motor control centers (average section 24" x 96" x 14")[2]	per section	23.2

Typical crew: 1 crew leader, 2 to 3 workers on panels, 3 to 5 workers on conduit, 3 to 5 workers on stringing cable and splicing, and 2 to 4 workers on transformers installation.
Equipment: Heavy, rigid conduit work will require pipe cutters, hacksaws, threading tools, and so forth. Light, rigid conduit work will not require threading tools. See Table 12-5.
[1]Three-phase, four-wire wye system.
[2]Add 20 percent for wall or column mounting.

Table 12-8. Electrical finish and trim—industrial

Work element description	Unit	Man-hours/unit
Install receptacles and switches	ea	0.3
Install incandescent light fixtures	ea	0.6
Install fluorescent light fixtures	ea	2.0
Hook up light-duty devices including testing	ea	3.0
Hook up heavy-duty devices including testing with controls	ea	12.0
Circuit testing	circuit	0.5
Typical crew: 1 crew leader and 2 to 3 workers. Equipment: Ordinary hand-tools and ladder or scaffold if needed.		

Table 12-9. Burglar and fire-alarm system

Work element description	Unit	Man-hours/unit
Burglar alarm:		
Open- and closed-circuit springs	ea	0.8
Contactors	ea	1.8
Electric matting	ea	1.8
Constant ringing drop	ea	2.9
Relays	ea	2.3
Fire alarm:		
Auto thermostat	ea	1.6
Special outlet box	ea	1.1
Bell	ea	1.3
Horn or small motor-driven siren	ea	2.1
Annunciator mounting	ea	2.2
Annunciator connections	per terminal	0.4
Control panel	ea	7.2
Transformers	ea	7.2
Cable pulled in conduit	1,000 lin ft	11.2
Cable exposed	1,000 lin ft	19.2
Typical crew: 1 crew leader and 1 to 3 workers. Equipment: Ordinary hand-tools.		

PLUMBING

CHAPTER 13

TYPES

Plumbing consists of installing cast-iron and steel pipe, valves and fittings, fire hydrants, thrust blocks, concrete pipe, vitrified-clay pipe, and asbestos-cement pipe; roughing-in plumbing; and installing fixtures.

PIPE

The installation of cast-iron and steel pipe includes unloading, placing, joint makeup, and testing. The installation of concrete and vitrified-clay pipe includes unloading, placing, caulking, grouting, installing gaskets, and testing. The installation of asbestos-cement pipe includes unloading, placing, installing gaskets, soaping, pulling sleeve over joint, and testing.

VALVES AND FITTINGS

The installation of valves and fittings includes unloading, placing, caulking and leading, welding, and bolting flanges. It also includes installing gaskets, packing, handwheels, and trim.

FIRE HYDRANTS, POST INDICATOR VALVES, AND THRUST BLOCKS

The installation of fire hydrants and post indicator valves includes unloading, placing, caulking, bolting, clamping, adjusting to grade, and plumbing stems. The installation of thrust blocks includes bracing, forming, reinforcing, placing concrete, and stripping forms.

ROUGH IN PLUMBING

The roughing-in of plumbing includes unloading and installing sewer and drain pipe, installing water pipe, and testing. The installation of cast-iron drains includes caulking and leading joints, plumbing and grading pipe, installing pipe hangers and straps, cutting pipe, and installing fittings. The installation of galvanized-steel pipe vents and drains includes cutting and threading pipe, making joints and applying joint compound, plumbing and grading pipe, installing pipe hangers and straps, and installing fittings. The installation of copper and galvanized-steel water pipe includes cutting, threading, and making steel pipe joints; cleaning and soldering copper pipe joints; plumbing and grading pipe; and installing pipe hangers and straps.

The installation of plastic water pipe (polyvinyl chloride pipe) includes cutting, cleaning, and cementing; plumbing and grading pipe; and installing pipe hangers and straps.

FINISH PLUMBING

The installation of finish plumbing includes setting and connecting all plumbing fixtures (such as bathtubs, lavatories, water closets, urinals, showers, and sinks).

ESTIMATING TABLES

Tables 13-1 through 13-7, pages 13-3 through 13-9, may be used in preparing detailed man-hour estimates for plumbing installations. The tables do not include provision for loading and hauling equipment and materials to the jobsite. The installation of PVC pipe includes cleaning, applying solvent, drying time, and installation of hangers and supports. Table 13-8, pages 13-10, gives information on needed quantities of solvent.

EXAMPLE OF TABLE USE

Problem. Twenty housing units are to be constructed. Estimate the number of man-hours needed for rough in. Activity estimates show the following quantities:

Rough in sanitary lines (4-inch cast-iron and smaller) —— 145 joints

Rough in water lines (3/4-inch and smaller threaded pipe) —— 185 joints

Rough in fixtures:

Bathtub with shower	20 ea
Lavatory	20 ea
Water closet	20 ea
Kitchen sink	20 ea

Solution: Using Tables 13-1 through 13-8, the following computations are made:

4-inch and smaller cast-iron drain line . .	145 joints x 0.85 man-hours	= 123
3/4-inch and smaller water line	185 joints x 0.5 man-hours	= 93
Rough in fixtures:		
Bathtub with shower	20 ea x 4 man-hours	= 80
Lavatory	20 ea x 3 man-hours	= 60
Water closet	20 ea x 3 man-hours	= 60
Kitchen sink	20 ea x 3 man-hours	= 60
Total man-hours for rough in		= 476

Table 13-1. Installation of pipe-welded pipelines

Work element description	Unit	Man-hours/unit
Install schedule 40 pipe, by oxyacetylene welding, butt weld; positions include horizontal, vertical, and overhead:		
1-inch	joint	0.6
1 1/4-inch	joint	1.02
1 1/2-inch	joint	1.12
2-inch	joint	1.15
2 1/2-inch	joint	1.43
3-inch	joint	1.67
3 1/2-inch	joint	1.87
4-inch	joint	2.13
5-inch	joint	2.74
6-inch	joint	3.73
8-inch	joint	4.91
10-inch	joint	6.72
Install schedule 40 pipe, by metallic arc welding, butt welds; positions include horizontal, vertical, and overhead:		
1-inch	joint	0.5
1 1/4-inch	joint	0.5
1 1/2-inch	joint	0.5
2-inch	joint	0.5
2 1/2-inch	joint	0.5
3-inch	joint	0.5
3 1/2-inch	joint	0.75
4-inch	joint	0.75
5-inch	joint	0.75
6-inch	joint	0.85
8-inch	joint	0.85
10-inch	joint	1.0

NOTES:
1. The time for installation of the pipe includes erecting and aligning pipe in hangers, cutting and beveling one end of pipe, and welding pipe.
2. Schedule 40 steel pipe corresponds to former designation: "standard." Schedule 80 steel pipe corresponds to former designation: "extra strong." Schedule number is selected using formula: *Schedule Number = 1000xP/S*, where P is operating pressure, psig and S is allowable stress value, psi.
3. For schedule 80 pipe, multiply man-hours by 1.6.
4. This table is based upon a crew of 3 workers: 1 pipefitter, 1 welder, and 1 helper.

Table 13-2. Installation of thrust blocks, valves, and fittings—welded steel pipelines

Work element description	Unit	Man-hours/unit
Install thrust blocks for (2 worker crew):		
12-inch and smaller pipe	ea	6.40
14-to 24-inch pipe	ea	9.60
Install standard (welded) fittings, butt-welded, oxyacetylene and arc, all positions[1]:		
1-inch	ea	0.45
1 1/4-inch	ea	0.65
1 1/2-inch	ea	0.70
2-inch	ea	0.88
2 1/2-inch	ea	1.14
3-inch	ea	1.36
3 1/2-inch	ea	1.48
4-inch	ea	1.62
5-inch	ea	2.06
6-inch	ea	2.64
8-inch	ea	3.56
10-inch	ea	5.11
Install standard valves, oxyacetylene and metallic arc[2]:		
1-inch	ea	0.50
1 1/4-inch	ea	0.95
1 1/2-inch	ea	1.05
2-inch	ea	1.15
2 1/2-inch	ea	1.38
3-inch	ea	1.62
3 1/2-inch	ea	1.86
4-inch	ea	2.06
5-inch	ea	2.62
6-inch	ea	3.58
8-inch	ea	5.06
10-inch	ea	7.08

[1]This is based on the average time required to erect, align, and weld-up fittings. The crew consists of two workers: 1 welder and 1 helper. For extra-heavy fittings, multiply by a factor of 1.3.
[2]This is based on the average time is takes for a crew of 2 workers (welder and helper) to erect and align, and weld-out the fittings on the valve. For extra-heavy fittings, multiply by a factor of 1.5.

Table 13-3. Installation of steel pipe—threaded and flanged (schedule 40)

Work element description	Unit	Man-hours/unit
Install threaded and flanged valves (schedule 40):		
2-inch	ea	0.60
2 1/2-inch	ea	0.72
3-inch	ea	0.82
3 1/2-inch	ea	1.00
4-inch	ea	1.10
5-inch	ea	1.40
6-inch	ea	1.90
8-inch	ea	2.00
10-inch	ea	2.50
12-inch	ea	3.00
Install threaded pipe, schedule 40:		
1/2 - 3/4-inch	joint	0.50
1-inch	joint	0.50
1 1/4-inch	joint	0.50
1 1/2-inch	joint	0.50
2-inch	joint	0.50
2 1/2-inch	joint	0.50
3-inch	joint	0.75
3 1/2-inch	joint	0.75
4-inch	joint	0.75
5-inch	joint	1.00
6-inch	joint	1.00
8-inch	joint	1.50

Table 13-3. Installation of steel pipe—threaded and flanged (schedule 40) (continued)

Work element description	Unit	Man-hours/unit
Install schedule 40 pipe, flange fittings:		
2-inch	joint	0.25
2 1/2-inch	joint	0.25
3-inch	joint	0.25
3 1/2-inch	joint	0.35
4-inch	joint	0.35
5-inch	joint	0.35
6-inch	joint	0.50
8-inch	joint	0.50
10-inch	joint	0.65
12-inch	joint	0.75
Install thrust block:		
12-inch and smaller	ea	6.40
14-inch and larger	ea	9.60
Install flanged fittings (schedule 40):		
2-inch	ea	0.80
2 1/2-inch	ea	0.88
3-inch	ea	0.96
3 1/2-inch	ea	1.06
4-inch	ea	1.60
5-inch	ea	1.94
6-inch	ea	2.20
8-inch	ea	2.68
10-inch	ea	2.72
12-inch	ea	5.80

NOTES:

1. This table is based on the fabrication and installation of pipe per joint. The job operations taken into account are making fittings service tight, installing, handling materials and tools, and threading one end per joint.
2. The crew size in this table is based on 1 pipefitter and 1 helper for pipe under 4 inches. For pipe 4 inches and over, 1 pipefitter and 2 helpers are used.
3. For extra-heavy (schedule 80) pipe and screwed fittings, multiply by a factor of 2.
4. For schedule 120 pipe and screwed fittings, multiply by a factor of 3.
5. The time required to test a piping system is generally based on a percentage of the total amount of labor hours the job requires. The most accurate percentage to use is 6.

Table 13-4. Installation of vitrified-clay pipe

Work element description	Unit	Man-hours/unit
Install vitrified-clay pipe and fittings:		
4- to 6-inch	joint[1]	0.25
8-inch	joint[2]	0.30
10-inch	joint	0.50
12-inch	joint	0.60
15-inch	joint	0.95
18-inch	joint	1.10
21-inch	joint	1.25
24-inch	joint	1.40
30-inch	joint	1.75
36-inch	joint	2.00

[1]Joint size is 2 feet 6 inches.
[2]Joint size is 3 feet for all remaining pipe.
This table is based on a crew of 6 workers for all pipe up to and including 21 inches. For larger pipe, a crane and operator are needed, thus increasing the crew size to 7.

Table 13-5. Finish plumbing

Work element description	Unit	Man-hours/unit
Install fixture including all trim:		
Lavatory	ea	3
Water closet	ea	4
Stop sink	ea	4
Residential hot water heater	ea	3
Garbage disposal	ea	3
Urinal	ea	3
Bathtub	ea	5
Urinal with stall	ea	4
Footbath	ea	4
Kitchen sink	ea	5
Shower with stall	ea	8
Bathtub with shower	ea	7

NOTE: This table is based on a crew of 2 workers: 1 plumber and 1 helper.

Table 13-6. Rough in plumbing

Work element description	Unit	Man-hours/unit
Install sewer pipe:		
4- to 12-inch	ft	0.45
Install cast-iron drain lines and fittings:		
4-inch	joint[1]	0.85
6-inch	joint	1.00
8-inch	joint	1.30
Pipe work (steel) threaded pipe (schedule 40):		
1/2- to 3/4-inch	joint	0.50
1-inch	joint	0.50
1 1/4-inch	joint	0.50
1 1/2-inch	joint	0.50
2-inch	joint	0.50
2 1/2-inch	joint	0.75
3-inch	joint	0.75
3 1/2-inch	joint	1.00
4-inch	joint	1.00
Copper tubing[2]		
3/8- to 1/2-inch	joint	0.25
3/4-inch	joint	0.50
1 to 1 1/4-inch	joint	0.50
Roughing-in work:		
Lavatory	ea	3.00
Water closet	ea	3.00
Shower with stall	ea	8.00
Stop sink	ea	3.00
Urinal with stall	ea	3.00
Bathtub	ea	3.00
Kitchen sink	ea	3.00
Bathtub with shower	ea	4.00
Floor drain	ea	1.00
Grease trap	ea	2.00
Valves, faucets, etc., installed with rough plumbing:		
Less than 1-inch	ea	0.50
1- to 2-inch	ea	0.50
Over 2-inch	ea	0.75
Test plumbing system, per fixture		1.00

[1]A joint is the connection that joins pipe with pipe, pipe with a valve, pipe with a coupling, and so forth.
[2]Usually less than half as many joints will be required for copper tubing than for steel pipe of equal length.
This table is based on a crew of 2 workers: 1 plumber and 1 helper.

Table 13-7. Install polyvinyl chloride pipe, solvent welded

Work element description	Unit	Man-hours/unit
1/2-inch pipe	1,000 lin ft	2.9
3/4-inch pipe	1,000 lin ft	5.5
1-inch pipe	1,000 lin ft	8.0
1 1/4-inch pipe	1,000 lin ft	11.0
1 1/2-inch pipe	1,000 lin ft	13.5
2-inch pipe	1,000 lin ft	13.5
3-inch pipe	1,000 lin ft	13.5
4-inch pipe	1,000 lin ft	20.0
Fittings (time is based on per 10 fittings):		
Couplings:		
1/2-inch	per 10	0.3
1-inch	per 10	0.5
2-inch	per 10	0.9
3-inch	per 10	1.5
Elbows:		
1/2-inch	per 10	0.3
1-inch	per 10	0.5
2-inch	per 10	1.0
3-inch	per 10	1.5
4-inch	per 10	2.5
Tees:		
1/2-inch	per 10	0.4
1-inch	per 10	0.6
2-inch	per 10	1.5
3-inch	per 10	2.0
4-inch	per 10	2.5

Suggested crew size: 2 to 4 workers
NOTE: Polyvinyl chloride solvent will not work with "C" polyvinyl chloride. Each must have a special solvent cement.

Table 13-8. Polyvinyl chloride solvent requirements

Size fittings (in inches)	Number of joints	Pint number of couplings or elbows	Number of tees	Number of joints	Quart number of couplings or elbows	Number of tees
1/2	350	175	115	700	350	230
3/4	200	100	65	400	200	130
1	150	75	50	300	150	100
1 1/4	110	55	35	220	110	70
1 1/2	80	40	25	160	60	50
2	45	22	15	90	45	30
3	35	17	12	70	35	25
4	25	12	2	50	25	15
6	16	8	5	32	16	10
8	10	5	3	20	10	6

EQUIPMENT INSTALLATION CHAPTER 14

TYPES

Equipment installation includes unloading, moving into location, uncrating, cleaning, assembling, positioning, aligning, supporting, and anchoring if required.

UNLOADING

The task of unloading and moving in includes lifting or skidding from the truck, transporting with equipment, or rolling or skidding into approximate position. The typical crew for this work is one crew leader and two to five workers, depending on the weight and size of the equipment. Mechanical lifting equipment is normally used to unload and move the heavier pieces.

CLEANING AND ASSEMBLING

The task of cleaning and assembling includes uncrating, removing protective paper and coating, removing grease and oils, removing rust, assembling and attaching any parts shipped loose, and flushing oil reservoirs and filling with the proper lubricant. The typical crew for this work is one crew leader and one to four workers.

POSITIONING AND ALIGNING

The task of positioning and aligning includes moving into position, bringing to grade, leveling, aligning, and connecting drives. The typical crew for this work is one crew leader and two to four workers.

SUPPORTING AND ANCHORING

The task of supporting and anchoring includes installing shims and plates; grouting, drilling for expansion shields; installing expansion shields; drilling and tapping base-plates; and installing bolts, washers, and nuts. The typical crew for this work is one crew leader and two to four workers.

CONNECTING EQUIPMENT

The task of connecting equipment includes initial wiring, piping, or duct connection. It does not include installing breakers, switches, controls, dampers, or valves. The typical crew for this work is one crew leader and one to four workers.

ESTIMATING TABLES

Tables 14-1 through 14-8, pages 14-2 through 14-8, may be used in preparing detailed man-hour estimates for equipment installation. The tables do not include provisions for loading and hauling equipment to the jobsite or for piping, wiring, or ductwork other than the initial connection to the equipment.

Table 14-1. Installation of air compressors and pumps

Work element description	Unit	Man-hours/unit	Crew Size
Electric-driven compressor tank unit:			
5 to 20 cu ft per min	1	10	2
25 to 50 cu ft per min	1	12	2
Motor and compressor set (reservoir tank not included):			
75 to 250 cu ft per min	1	16	2 - 3
275 to 500 cu ft per min	1	30	3 - 4[1]
550 to 750 cu ft per min	1	50	4 - 6[1]
Motor and pump set (reservoir tank not included):			
50 to 200 gal per min	1	12	2
250 to 750 gal per min	1	20	2 - 3[1]
800 to 1,250 gal per min	1	30	3 - 5[1]

[1]Need forklift truck when working inside a building.
Add 20 percent to man-hours if fuel-burning engines are used. Compressor pressures are 100 - 250 psi.

Table 14-2. Installation of air-conditioning equipment

Work element description	Unit	Man-hours/unit	Crew Size
Window air-conditioning units:			
1/2- to 3/4-ton	1	5	1 - 2
1- to 1 1/2-ton	1	7	1 - 2
2- to 2 1/2-ton	1	9	1 - 2
Self-contained, water-cooled air-conditioning units:			
3- to 5-ton	1	42	2 - 4
5- to 8-ton	1	55	2 - 4
10- to 15-ton	1	80	3 - 5
Central air-conditioning equipment:			
3- to 5-ton	1	40	3 - 4
5- to 8-ton	1	70	3 - 5
10- to 15-ton	1	90	4 - 6
15- to 25-ton	1	200	4 - 6
25- to 50-ton	1	300	4 - 6
50- to 75-ton	1	600	5 - 10
75- to 100-ton	1	1,000	5 - 12

NOTE: Installation does not include piping and wiring to and between equipment.

Table 14-3. Installation of electric motors and exhaust fans

Work element description	Unit	Man-hours/unit	Crew Size
Electric motors with switches:			
1- to 5-hp	1	3	1
5- to 15-hp	1	5	1 - 2
15- to 30-hp	1	16	2 - 3[1]
30- to 100-hp	1	48	2 - 3[1]
Exhaust fans:			
12- to 24-in	1	2	1
26- to 42-in	1	6	1 - 2
48- to 60-in	1	6	2 - 3[1]
Louvers for exhaust fans:			
12- to 24-in	1	10	1 - 2
26- to 42-in	1	16	2 - 3[2]
48- to 60-in	1	20	2 - 3[2]
Power ventilators:			
6- to 20-in	1	8	1 - 2
24- to 42-in	1	21	2 - 3

[1]Need forklift truck to move if working inside a building. Same truck or hoist is used to position and align.
[2]May need scaffolding if high on wall.
NOTE: Man-hours for louvers include fabricating and setting at site.

Table 14-4. Installation of heating boilers and expansion tanks

Work element description	Unit	Man-hours/unit	Crew Size
Steam boilers:			
50,000- to 95,000-BTU	1	14	2 - 3
100,000- to 250,000-BTU	1	22	2 - 3
260,000- to 450,000-BTU	1	38	4 - 6
500,000- to 750,000-BTU	1	55	4 - 6
800,000- to 1,000,000-BTU	1	85	4 - 6
1,050,000- to 1,500,000-BTU	1	135	4 - 6
Hot-water boilers:			
50,000- to 95,000-BTU	1	16	2 - 3
100,000- to 250,000-BTU	1	38	2 - 3
260,000- to 450,000-BTU	1	52	4 - 6
500,000- to 750,000-BTU	1	85	4 - 6
800,000- to 1,000,000-BTU	1	115	4 - 6
1,050,000- to 1,500,000-BTU	1	175	4 - 6
Expansion tanks:			
20- to 50-gallon	1	6	2
55- to 100-gallon	1	10	2 - 3
Fuel oil storage tanks above grade:		See Table 14-8, page 14-8	

NOTES:
1. BTU = British thermal units.
2. Piping and wiring not included. Boilers are iron-sectional with insulating jackets and safety devices. Subtract 20 percent for steel-packaged boilers.

Table 14-5. Installation of hot-water storage heaters

Work element description	Unit	Man-hours/unit	Crew size
Hot-water storage heaters:			
50- to 75-gal	1	10	2
80- to 150-gal	1	16	2 - 3
155- to 300-gal	1	36	3 - 6[1]

[1]Needs forklift truck or else additional men to move and position.
NOTE: Piping and wiring not included.

Table 14-6. Installation of carpentry and general shop equipment

Work element description	Unit	Man-hours/unit	Crew Size
Carpentry equipment:			
Bandsaw, 18-in	1	10	2 - 3
Bandsaw, 28-in	1	14	2 - 3
Table saw, 16-in	1	18	2 - 3
Cut-off saw, 18-in	1	16	2 - 3
Disk sander, 18-in	1	10	2 - 3
Jointer, 12-in	1	8	2 - 3
Lathe, 60-in	1	24	4 - 5
Planer, 24- by 8-in	1	30	3 - 4
Shaper, 4-in vertical lift	1	6	2 - 3
General shop equipment:			
Bench grinder	1	2	1
Pedestal grinder	1	8	2
Drill press, 1/2- to 1-in[1]	1	4	2 - 3
Drill press, 1 1/2- to 2 1/2-in[1]	1	8	2 - 3
Power hacksaw, 16-in	1	26	3 - 4
Pipe threader, 1/2- to 4-in	1	8	2 - 3

[1]Light work equipment for wood.
NOTE: A forklift or hand truck is needed to move any of the above equipment.

Table 14-7. Installation of machine- and metal-shop equipment

Work element description	Unit	Man-hours/unit	Crew Size
Machine-shop equipment:			
Hydraulic bender	1	15	2 - 4
Hydraulic press, 100-ton	1	12	2 - 3[3]
Hydraulic press, 400-ton	1	18[1]	3 - 4[3]
Lathe, 13- by 78-in	1	35	2 - 4[3]
Lathe, 25- by 144-in	1	70	5 - 7[2]
Milling machine	1	50	4 - 6[3]
Planer	1	42	3 - 4
Shaper, 24-in	1	20	3 - 4
Drill press, 4-ft arm, 2-in chuck	1	48	4 - 6[2]
Metal-shop equipment:			
Brake, 60-in, 18-gage	1	18[1]	3 - 4[3]
Brake, 96-in, 14-gage	1	32[1]	5 - 7[3]
Brake, 120-in, 11-gage	1	40[1]	5 - 7[3]
No. 1/2 universal iron worker	1	38	2 - 4[3]
Shear, 96-in, 18-gage	1	25[1]	4 - 6[3]
Shear, 96-in, 11-gage	1	28[1]	4 - 6[3]
Bandsaw, 26-in	1	18	2 - 3[3]
Roll, 48-in	1	8	2 - 3

[1]Does not include construction of special bases.
[2]Item must be moved on rollers to prevent twisting.
[3]Requires one or two forklifts to move.

Table 14-8. Installation of warm-air furnaces

Work element description	Unit	Man-hours/unit	Crew size
Warm-air furnaces:			
50,000- to 100,000-BTU/hr	1	22	2 - 3
100,000- to 150,000-BTU/hr	1	34	2 - 3
150,000- to 300,000-BTU/hr	1	52	2 - 4
300,000- to 600,000-BTU/hr	1	75	2 - 4
600,000- to 1,000,000-BTU/hr	1	120	3 - 5
1,000,000 - 2,000,000-BTU/hr	1	150	3 - 5
Fuel oil storage tanks (manufactured):			
200- to 500-gal	1	10	2 - 3
1,000- to 2,000-gal	1	20	3 - 4
3,000- to 5,000-gal	1	40	4 - 6

NOTE: Furnaces are complete with fans, filters, safety controls, and oil burners. Does not include ducts.

METAL WORK

CHAPTER 15

TYPES

Metal work includes erection of structural and miscellaneous steel fabrications and erection of sheet metal and fencing.

ERECTION OF STRUCTURAL AND MISCELLANEOUS STEEL

The labor for erection of structural steel includes unloading, erecting temporary bolting, plumbing, leveling, high-strength bolting, and/or welding. Miscellaneous steel erection includes unloading, setting in place, plumbing, leveling, and fastening (usually by bolting or welding).

SHEET METAL

This includes the fabrication and erection of gutters, downspouts, ridges, valleys, flashings, and ducts. Fabrication is usually done in the sheet metal shop and includes making patterns, cutting, forming, seaming, soldering, attaching stiffeners, and hauling to the site. Erection includes unloading, storing on site, handling into place, hanging, fastening, and soldering.

INSTALLATION OF FENCING

The installation of fencing includes digging holes; unloading and distributing materials; setting, plumbing, aligning, and concreting posts; installing braces; setting, stretching, and fastening fence fabric; installing caps and/or brackets on posts; installing gates, including hardware; and stringing lone and barbed wire.

ESTIMATING TABLES

Tables 15-1 through 15-3, pages 15-2 and 15-3, may be used in preparing detailed man-hour estimates for metal work.

Table 15-1. Structural-steel erection

Work element description	Unit	Man-hours/unit
Handling (unloading steel from truck to a ground location at the erection site)	ton	1.5
Erection of steel; erect, bolt, and plumb only[1]	ton	5
Foundation work	ton	5
Column and struts		7
Beams and channels		5
Plate girder		5
Crane rails		5
Knee braces		9
Floor plates		7
Fittings, bolts, rods, and anchor plates		3
Girt, angles, angle braces, purlins		7
Skylight frames and curbs		10
Monitor frames		12
Dormers		10
Door frames		12
Roof trusses		9
Transmission towers		16 - 30
Light steel trestles		12 - 24
Steel mill buildings		4 - 12
Steel frame multistoried buildings		3 - 10
Temporary bolting[2] (3 to 10 bolts/ton)	100 bolts	6
Bolting, high-strength (15 to 30 high-strength bolts/ton)	100 bolts	5
Riveting, air-driven[3]		
On ground, easy work	100 rivets	8
Trusses	100 rivets	10
Steel office buildings	100 rivets	12
Steel mill buildings	100 rivets	12
Light trestles and towers	100 rivets	18
Riveting, hand-driven		
Easy work	100 rivets	14
Difficult work	100 rivets	21
Welding[4] (5 to 10 ft of 1/4 weld/ton)	100 lin ft	22

[1]For the erection of steel in these tables, the crew consists of 1 foreman, 1 crane operator, and 4 ironworkers. A crew size can vary considerably with respect to the different factors involved, and the user of these tables should take this into consideration.
[2]For bolting, the crew in this table consists of 4 bolters and 1 helper.
[3]The riveting crew size in this table is 5 workers: 1 helper, 1 catcher, 2 riveter, and 1 additional helper to handle the air compressor and hoses.
[4]Welding crew is 2 welders and 1 helper.

Table 15-2. Sheet-metal work

Work element description	Unit	Man-hours/unit
Roof ridges[1]	100 lin ft	2.5
Roof valleys	100 lin ft	2.5
Roof flashing	100 lin ft	8
Roof gutters	100 lin ft	4
Downspouts	100 lin ft	4
Ducts[2]		
100 sq in or less[3]	10 lin ft	1 - 3
100 to 400 sq in	10 lin ft	2 - 5

[1]The crew for this portion of the table is 3 workers: 1 skilled laborer and 2 helpers.
[2]The crew here is 1 mechanic (skilled laborer) and 1 helper.
[3]The size here means that in 10 feet of length the duct will have 100 square inches or less of surface area.

Table 15-3. Installation of fencing

Work element description	Unit	Man-hours/unit
Install wood fence 4-in high	1,000 sq ft	54
Install metal fencing 5-ft-high chain link	1,000 lin ft	219
8-ft-high chain link	1,000 lin ft	243
Hang gates	leaf	8

Suggested crew size:
Digging operations: 1 equipment operator and an auger truck.
Fencing operations: 4 to 6 laborers

NOTES:
1. Fence installation includes: digging holes, unloading and distributing materials, setting, plumbing, aligning and concreting posts, installing braces, stretching and fastening fence fabric, installing caps or brackets on posts, and stringing line and barbed wire.
2. Hanging gates includes installation of hardware.

WATERFRONT CONSTRUCTION CHAPTER 16

TYPES

Waterfront construction includes pile driving, pile bracing, pile capping, pier framing, installation of deck hardware, and pile extraction.

EQUIPMENT SELECTION

The type of driving and extracting equipment used can have a considerable effect on the time required for this work. A steam, diesel, or drop hammer may be used to drive piling. A steam or air extractor or a pulling beam with blocks and cables may be used for pile extraction. The equipment used affects the time required for a given unit of work. The estimator should know what equipment is to be used.

PILE-DRIVING WORK

The task of pile driving includes assembling leads and hammer, preparing equipment for driving, sharpening pile tips, installing steel tips on wood piles, squaring and trimming pile butts, cutting holes in steel piles to facilitate handling, moving driver into place, placing pile-in leads, driving pile, and cutting pile to the required grade.

PILE-BRACING INSTALLATION

The installation of pile bracing includes cutting, drilling, handling into place, and fastening.

PILE-CAPPING WORK

Wood or steel pile capping includes cutting, drilling, handling into place, and fastening. Concrete pile capping includes forming, reinforcing, placing and curing concrete, and stripping forms.

SHEET-PILING INSTALLATION

The installation of sheet piling includes preparation of leads and equipment for driving, preparation of pile for driving, placing pile-in leads, driving pile, cutting and bracing pile, and installing deadman and tiebacks.

PIER-FRAMING INSTALLATION

The installation of pier framing includes the cutting, drilling, handling, and fastening of stringers, bridging, all decking, rails, and bumpers.

DECK HARDWARE INSTALLATION

The installation of deck hardware includes required drilling, handling, and fastening of bits, bollards, chocks, cleats, and pad eyes.

PILE EXTRACTION

The task of pile extraction includes rigging the equipment and extracting and handling piling. It also includes cutting piles below water level and carrying pieces to stockpiles.

ESTIMATING TABLES

Tables 16-1 through 16-8, pages 16-3 through 16-6, may be used in preparing detailed man-hour estimates for waterfront construction. The tables do not include delivery of materials to the jobsite.

EXAMPLE OF TABLE USE

The example below illustrates the use of Tables 16-1 through 16-8 for making a man-hour estimate for waterfront construction.

Problem. A pier to be enlarged will required 200 50-foot wood-bearing piles. Because the pier is located between several buildings, the piles cannot be prepared adjacent to the pile-driving area. In this case, increase the time for placing and driving by 15 percent because an additional crane will be needed to transport the prepared piles to the driving area (see note on Table 16-1). Work requirements are as follows:

200 — 50-foot wood-bearing piles
400 — horizontal pile braces
800 — diagonal pile braces
640 — linear feet of wood pile caps
800 — linear feet of stringers
2,500 — square feet of decking
2,500 — square feet of wearing surface
350 — feet of bull rail
10 — cleats

Solution.

Description	Units	Man-hours/unit	Subtotal
Preparing piles	200.00	2.0	400
Driving piles	200.00	1.7	340
Rigging equipment	4.00	6.0	24
Cutting pile at level	200.00	0.2	40
Dismantling equipment	4.00	6.0	24
Horizontal braces	400.00	1.0	400
Diagonal braces	800.00	0.8	640
Pile caps	0.64	100.0	64
Stringers	2.40	40.0	96
Decking	2.50	20.0	50
Wearing surface	2.50	16.0	40
Bull rail	0.35	60.0	21
Bumpers	0.02	36.0	1
Cleats	10.00	2.0	20
		Total man-hours	2,160

Table 16-1. Pile driving—wood-bearing piles

Work element description	Unit	Man-hours/unit
25-foot pile	ea	
Preparation		1.5
Drive		0.5[1]
50-foot pile	ea	
Preparation		2.0
Drive		1.5[1]
75-foot pile	ea	
Preparation		2.5
Drive		3.0[1]
Rigging leads and hammer (2-3 workers)	ea	6.0
Cut pile at required level	ea	0.2
Dismantle leads and hammer	ea	6.0
Lash piles to form dolphin	ea	1.5

NOTE: Typical crew: 1 leader and 6 workers; 10 men when placing dolphins.

[1]If an additional crane is required to support construction, increase figures by 15 percent.

Table 16-2. Pile driving—steel-bearing piles

Work element description	Unit	Man-hours/unit
25-foot pile	ea	
Preparation		1.5
Drive		0.8[1]
50-foot pile	ea	
Preparation		2.0
Drive		2.3[1]
75-foot pile	ea	
Preparation		2.5
Drive		4.5[1]
Rigging leads and hammer (2-3 workers)	ea	6.0
Cut pile at required level	ea	0.3
Dismantle leads and hammer	ea	6.0

NOTE: Typical crew: 1 leader and 6 workers.

[1]If an additional crane is required to support construction, increase figures by 15 percent.

Table 16-3. Pile driving—precast concrete bearing piles

Work element description	Unit	Man-hours/unit
20-foot pile, complete	ea	0.5
40-foot pile, complete	ea	1.5
60-foot pile, complete	ea	2.5
80-foot pile, complete	ea	3.5
100-foot pile, complete	ea	5.0

NOTE: Typical crew: 1 leader and 8 workers.

Table 16-4. Pile bracing and capping

Work element description	Unit	Man-hours/unit
Bracing[1]	ea	
Horizontal		1.0
Diagonal		0.8
Capping	1,000 lin ft	
Wood		100.0
Steel		150.0
Concrete		200.0

NOTE: Typical crew: 1 leader and 6 workers.

[1]Table based on 4-inch x 10-inch x 4-foot bracing members.

Table 16-5. Sheet piling

Work element description	Unit	Man-hours/unit
Wood (20 feet deep)	1,000 sq ft	
Preparation		4.0
Drive		35.0
Bracing		20.0
Cutting		1.5
Steel (30 feet deep)	1,000 sq ft	
Preparation		6.0
Drive		50.0
Bracing		30.0
Cutting		2.0
Concrete (30 feet deep)	1,000 sq ft	
Preparation		35.0
Drive		75.0
Bracing		30.0
Cutting		4.0
Install deadman and tieback	ea	24.0

NOTE: Typical crew: 1 leader and 6 workers.

Table 16-6. Pier framing

Work element description	Unit	Man-hours/unit
Stringers	1,000-bd-ft measure	40
Bridging	1,000 lin ft	40
4-inch deck	1,000 sq ft	20
2-inch wearing surface	1,000 sq ft	16
Bull rail	1,000 lin ft	60
Bumper	1,000 lin ft	36

NOTE: Typical crew: 1 leader and 10 workers.

Table 16-7. Deck hardware

Work element description	Unit	Man-hours/unit
Bits	ea	3
Bollards	ea	4
Chocks	ea	3
Cleats	ea	2
Pad eyes	ea	1

NOTE: Typical crew: 1 leader and 4 workers.

Table 16-8. Pile extraction

Work element description	Unit	Man-hours/unit
Pile removal		
Piles with extractor	ea	1.5
Sheet piling with extractor	1,000 sq ft	25.0
Sheet piling with crane	1,000 sq ft	20.0
Cut pile below water level	ea	1.0
Pile disposal	ea	0.5

NOTE: Typical crew: 1 leader and 4 workers.

OTHER ESTIMATING REQUIREMENTS CHAPTER 17

WRECKING AND SALVAGING

SIMPLE PROCEDURES

Only relatively simple procedures are currently used by the Army engineers to wreck structures. Far less effort is made to salvage construction materials than once was, since labor costs have increased more than material costs. The salvage of marine vessels is a separate subject and is covered in TM 55-503.

USE OF ESTIMATING TABLE

Table 17-1, page 17-2, may be used to prepare preliminary man-hour estimates for wrecking and salvaging land structures. Because of the great variance in capacity of wrecking equipment, only the roughest labor estimates are included here. The table does not provide for moving to the site or hauling salvaged materials.

EXAMPLE OF TABLE USE

Problem. Sixteen wooden barracks are to be demolished. Salvageable material is minimal, but includes parts of furnaces. Labor is largely unskilled, but four crews can work simultaneously. Tractors are available. Each barracks contain 36,000 cubic feet (60 x 30 x 20) or 36 units. Using average man-hour estimates in Table 17-1, find the total man-hours required to perform the work.

Solution. Since each unit requires 12 man-hours, the total work estimate is 36 x 12 x 16 = 6,912 man-hours. Thus, approximately 6,900 man-hours are needed to complete this task.

REMOVING SNOW

TYPES OF SNOW REMOVAL

Snow removal includes the salting or sanding of roads and airfields, the plowing of roads and airfields by a 5-ton dump truck with a plow or grader, snow blowing, and shoveling of sidewalks by workers or with a garden tractor. Hauling of snow is not included because this activity is similar to earth moving with front loaders and dump trucks (see Chapter 6).

EQUIPMENT SELECTION

Table 17-2, page 17-2, divides snowfalls into three types: light (under 2 inches), medium (2 to 6 inches), and heavy (over 6 inches). For light snowfalls, use salt to melt ice or sand to provide traction on the roads. A salt truck spreads salt or sand most efficiently, although spreading can be done by shovelers spreading salt or sand from the backs of dump trucks. For a medium snowfall, graders (which are able to clear wide paths at relatively high speeds) are the most efficient snow removal equip-

ment for main roads. Snowplows mounted on 5-ton dump trucks are used for secondary roads. For heavy snowfalls and large accumulations, snowblowers are necessary to discharge the snow over the high snow banks which build up on both sides of the road. Plows are used to move snow to the sides of the road. While graders alone cannot handle heavy snow loads, they are used continuously during a heavy snowstorm to keep main roads open.

ESTIMATING TABLE

Table 17-2 may be used to prepare preliminary man-hour estimates for snow removal.

Table 17-1. Wrecking and salvaging structures

Work element description	Unit	Man-hours/unit
Wood	1,000 cu ft	12
Brick	1,000 cu ft	20
Stone	1,000 cu ft	24
Steel	1,000 cu ft	18
Reinforced concrete	1,000 cu ft	24
NOTE: Typical crew: 1 leader and 8 workers.		

Table 17-2. Snow removal

Work element description	Equipment	Unit	Equipment hours/unit
Roads and airfields:			
Light snowfall (less than 2 inches) (salting and/or sanding)	Salt truck	mile (15' width)	0.2[1]
	Dump truck and shovelers	mile (10' width)	0.35[1]
Medium snowfall (2 to 6 inches) (plowing)	5-ton dump with plow grader	mile (6' width)	0.15
		mile (10' width)	0.18
Heavy snowfall (over 6 inches) (plowing and blowing)	5-ton dump with plow	mile (6' width)	0.25
	heavy-duty blower	mile (6' width)	0.15
Sidewalks:			
Light snowfall (less than 2 inches)	Men	1,000 lin ft	1.8
	Sidewalk tractor	1,000 lin ft	0.25
Medium snowfall (2 to 6 inches)	Men	1,000 lin ft	2.0 - 4.0
	Sidewalk tractor	1,000 lin ft	0.25 - 0.35
Heavy snowfall (over 6 inches)	Men	1,000 lin ft	4.0 + 0.5 per inch over 6 inches
	Sidewalk tractor	1,000 lin ft	0.35 + 0.06 per inch over 6 inches

[1]Includes refill time.

WORK-ELEMENT CHECKLIST APPENDIX A

BUILDING

Remove existing structures
Clearing and grubbing
Layout
Blasting
Grading
Fill, place, and compact
Landscaping, seeding, and sodding
Excavation and backfill
Relocate existing utilities
Concrete foundations and footings
Pipe sleeves
Underfloor conduit and plumbing
Transformer vault
Grade beams
Ground floor slab
Jet anchor bolts or plates
Concrete columns, beams, and girders
Concrete floor and roof slabs
Precast wall and roof panels
Precast structural members
Precast sills and lintels
Concrete canopy and entrances
Tread and nosings
Pipe sleeves and openings
Structural steel
Masonry - concrete block, brick, and structural tile
Flashing
Framing floors, walls, roofs, stairs
Sheathing walls and roof
Subflooring
Door bucks and frames - wood
Door bucks and frames - metal
Overhead doors
Window frames
Conduit in slabs and walls
Piping in walls
Electrical roughing-in
Plumbing roughing-in
Siding - wood
Metal siding and roofing
Hoods and ventilators
Insulation, roof
Roofing
Asphalt or wood shingles
Ductwork
Intercom system
Telephone switchboard equipment
Alarm systems, burglar and fire
Electric service
Telephone service
Wallboard
Lathing
Stairways
Metal studs and partitions
Insulation, walls and ceilings
Downspouts and gutters
Fire escape
Ladders
Platforms and catwalks
Roof scuttles
Exterior doors
Screen doors
Windows
Window screens
Jalousies
Exterior trim
Glazing
Louvers
Cabinets
Closet units
Lockers
Bulletin
Mirrors and medicine cabinets
Paneling
Interior doors
Metal doors
Metal toilet partitions

Security grills
Plastering
Ceramic tile
Electric fixtures
Plumbing fixtures
Finish flooring
Tile flooring, asphalt, rubber, vinyl, cork
Acoustical tile
Interior trim
Handrails
Caulking
Painting
Curbs and walks
Parking areas
Fencing
Cleanup

Air conditioning
Compressed air systems
Dehumidifiers
Dry cleaning equipment
Exhaust fan
Fire protection systems
Generators
Heating system
Laundry equipment
Pumps
Refrigerators
Shop equipment
Ventilation equipment
Mess equipment
Water coolers
Hospital equipment

OUTSIDE UTILITIES

Clearing and grubbing
Blasting
Trenching and ditching
Backfill and compact
Erosion control
Water mains
Water service lines
Sanitary sewer service lines
Valves
Valve boxes
Manholes
Water storage tanks
Water pumps
Sewage pumps
Storm sewers and manholes
Catch basins

Culverts
Culvert head and wing walls
Sewage treatment plants
Poles
Cable
Transformers
Telephone cable
Underground duct
Conduit risers
Manholes and handholds
Street lights
Security lights
Control devices
Capacitors and voltage regulators

PLANT OPERATIONS

Stripping quarry
Drilling and blasting
Handling and loading quarried material
Hauling to crusher or job
Setting up crusher plant
Operating crusher
Stockpiling crushed material
Hauling crushed material to plants or job
Setting up asphalt plant
Operating asphalt plant
Hauling asphalt to job
Setting up concrete batch plant

Hauling concrete to job
Manufacturing concrete block - all sizes
Manufacturing precast concrete units - all types
Hauling precast units to job
Reinforcing steel fabrications
Prefabricating doors, windows, jalousies, louvers, frames
Prefabricating stairs, cabinets, closet units
Prefabricating concrete pipe

ROADS, PAVING, AND WALKS

Clearing and grubbing
Blasting
Cut and fill
Grading
Trenching and ditching
Move and change interfering utilities
Culverts
Head and wingwalls
Catch basins
Storm drainage
Prepare subgrade, subbase, base
Fine grading
Erosion control
Asphalt tack coat
Spread and roll asphaltic concrete
Spread and roll chip and gravel coats
Concrete paving forms
Reinforcing steel and dowels
Expansion and contraction joints
Finishing and curing
Concrete curbs complete
Concrete walks complete
Asphalt curbs complete
Asphalt erosion protection
Asphalt walks complete
Precast curbs installed

WATERFRONT CONSTRUCTION

Sheet piling
Pile dolphins
Pier piling
Pile capping
Pier framing
Pier decking
Pier deck hardware
Pile extraction
Tiebacks and deadman
Seawalls
Dredging

RESOURCE CONSTRAINING

APPENDIX B

PROCEDURES

When daily equipment and personnel requirements exceed what is available to the manager for a project, he must *resource constrain* the project to have as little effect as possible on the project duration. Often resources can be shifted in such a way to avoid delaying the overall project duration; however, shifting resources may result In more critical activities and certainly less available float of some activities within the ES schedule.

Resource constraining a project consists of three parts: 1) resource constrain the ES schedule, 2) update the logic network, and 3) update the ES schedule.

PART 1: RESOURCE CONSTRAIN THE EARLY START SCHEDULE

Step 1. Find the first time period where resource requirements exceed the resources allocated. ES schedule resource manipulation must be done chronologically, one time period at a time, working from left to right within the ES schedule.

Step 2. Choose an activity(ies) to delay. In order to solve the problem of too many scheduled resources on a given day, you must delay an activity from being done and consuming resources on that day. To select which activity would be the best to delay, consider the following five priorities.

- The first priority choosing which activity to delay is to choose an activity that starts on the time period resources are exceeded. By choosing to delay an activity that has already started and is on-going, you are leaving that job undone, pulling out the resources, and planning to come back to finish it later. Choosing an activity that is just scheduled to start saves start-up and shut-down time, as well as unnecessary transportation requirements and extra on-site material-delivery coordination and security. If more than one activity is scheduled to start on the time period resources are exceeded, then consider the next priority for determining which activity to choose to delay.

- The second priority for choosing which activity to delay is to choose an activity that, when delayed, provides sufficient resources to solve the constraint problem. For example, if you have 15 trucks scheduled for a particular day but have only 12 trucks available to use, delaying an activity that uses just 2 trucks does not solve your problem; you now have only 13 trucks scheduled for that day, but you need to constrain it down to the 12 trucks (or less) that you have available. Choosing to delay an activity that uses, for example, 5 trucks on that day will bring your scheduled total down to 10, which solves the problem on that day. If no single activity provides sufficient resources to lower the amount to or below what you have available, then choose a combination of activities to delay to meet the constraint requirement. If, however, more than one activity provides sufficient resources to solve the problem, then

consider the next priority for determining which activity to delay.

- The third priority for choosing which activity to delay is to choose an activity with the most total float. This will prevent the manager from selecting critical or nearly critical activities to delay, unless absolutely necessary. If more than one activity has the most total float, (for example, three activities each have six days total float), then consider the next priority for determining which activity to delay.

- The fourth priority for choosing which activity to delay is to choose an activity with the most free float. Activities with more free float are less likely to impact follow-on activities in the schedule. If more than one activity has the most free float for example, two activities each have four days free float of the six days total float), then consider the next priority for determining which activity to delay.

The fifth priority for choosing which activity to delay is to choose the activity with the shortest activity duration. Shorter activity duration estimates are less likely to be incorrect and to extend the project's overall duration.

Step 3. Delay that activity one time period and follow the delay through the schedule. If an activity is delayed into interfering float or past its right bracket (LF), follow the results of the delay through the rest of the schedule. (An activity delayed into interfering float will delay another activity but will not delay the project duration.)

- Identify all activities that logically follow the delayed activity. The numbers of the follow-on activities are shown in parentheses behind the number of the delayed activity (those activities that cannot begin until the delayed, dependent activity is complete). For example, activity 25(40,55) indicates that activities 40 and 55 logically follow activity 25, and they may or may not be affected by the delay of activity 25. Check each of these follow-on activities to see if its ES time precedes the new EF time of the recently delayed activity. If so, delay that follow-on activity's ES until the first time period after the EF of the activity which had been delayed for resources. Subsequently, check activities 40 and 55 and the follow-on activities of 40 and 55 for possible effects. This pattern continues until all conflicting follow-on activities are delayed into free float.

Step 4. Sum the resources. After following the delay through the schedule, determine the new total resource requirement for each time period.

Step 5. Proceed to the next time period. Move to the next time period where required resources exceed the resources available. Repeat steps 2 through 4 above until the entire schedule has been adjusted to meet the resource limitations.

Step 6. Identity the cause of the delay. If an activity was delayed for resources at any time, place an "R" to the right of its LF bracket (see Figure B-1). If an activity was delayed because of logic only (because it logically follows a previously delayed activity), place an "L" to the right of its LF bracket. If an activity was delayed for both resources and logic (for example, an activity which was logically delayed because of a resource-delayed activity and then later further delayed because, of resources), mark the activity as a resource delay.

Step 7. Draw the resouree flow arrow(s). Each resource-delayed activity is immediately preceded by an activity(ies) that uses the same resource and has an EF time that is one time period before the resource-delayed activity begins. This activity(ies), when coupled with "mothballed" resources, will often provide sufficient resources to start the work the next time period. "Mothballed" resources are resources that were not put to work in the previous time period. (For example, 2 trucks were "mothballed" the day that 12 trucks are available and only 10 trucks were scheduled for work.) If two or more activities that use the same resource are scheduled to finish (EF) during the preceding time period,

choose the one which, when coupled with "mothballed" resources from the previous time period, will provide the least suffient resource; in other words, avoid resource overkill. Draw a resource flow arrow(s) from the end of the activity providing the resources to the beginning of the resource-delayed activity. If no one activity can provide sufficient resources, even when coupled with "mothballed" resources that were not in use during the previous day, draw flow arrows from two or more ending activities to the start of the resource-delayed activity.

Figure B-1 is resource constrained down to 18 carpenters. Now activity 15(50) is resource-delayed and will begin on time period 5.

Look at the preceding time period (4) for activities that end there and that use the same type of resource. Both activities 5(60,65) and 10(70) end at time period 4, but only activity 10(70) provides sufficient resources for activity 15(50) to begin. Therefore, activity 10(70) must be completed before activity 15(50) can begin. In this example, draw a resource flow arrow from the scheduled end (EF) of activity 10(70) to the new beginning (ES) of activity 15(50).

An activity may require assets from two or more activities, or one activity may provide assets for two or more activities. Figure B-2 is resource constrained down to 14 scoop loaders.

NETWORK NUMBER	EARLY START SCHEDULE																	
	1	2	3	4	5	6	7	8	9	10	11	12	13	14	15	16	17	18
5(60,65)	2c	2c	2c	2c														
10(70)	4c	4c	4c	4c	X	X	X											
15(50)				→	3c	3c			R									
20(65)				6c	6c	6c												

Figure B-1. Resource flow arrow

NETWORK NUMBER	EARLY START SCHEDULE																	
	1	2	3	4	5	6	7	8	9	10	11	12	13	14	15	16	17	18
25(35)				3s	3s	3s	3s											
30(55)				4s	4s	4s	4s		X									
35(50,55)								2s	2s	2s								
40						→		5s	5s				R					

Figure B-2. Multiple resource flow arrows

Activities 25(35) and 30(55) are both necessary to provide sufficient resources for activity 40 when coupled with two of the three unscheduled "mothball" resources not used in time period 7.

PART 2: UPDATE THE LOGIC NETWORK

Step 8. Draw the resource dummy arrow. A resource dummy arrow must be added to the logic network for every resource flow arrow on the ES schedule. Draw the resource dummy arrow from the activity(ies) that provide the resources to the activity(ies) that receive the resources. In Figure B-3, activity 20 provides resources for activity 30. It is not necessary to maintain the activity numbering rules (lower to higher) when adding resource dummy arrows.

Step 9. Conduct a new time analysis. Treat the added resource dummy arrow as a logic arrow, and conduct new forward and backward passes. The resource dummy arrow will change some of the early and late starts and finishes of the nodes in the network, and it may cause a change or addition to the critical path(s).

PART 3: UPDATE THE EARLY START SCHEDULE

Step 10. List activities. Activities that provided resources will gain new follow-on activity numbers (in parentheses).

Step 11. Mark time frames. Check the ES and LF times in the network for all activities. If an activity's ES or LF changed, remark the left and right brackets accordingly.

Step 12. Identify float. Recalculate interfering float for each activity based on the new ES and LF times. Update the interfering float ("Xs") on the ES schedule.

This step-by-step procedure will provide a solution to the problem of insufficient numbers of resources. If this technique results in project delays that are unacceptable, there are variations the manager can use to select activities to delay.

The first variation is to delay an activity that has already started by splitting the activity. This option requires that you essentially make two activities out of one and redefine the logic network. You must remember to add the new activity to the ES schedule.

The second variation often provides the better solution to the resource problem. It is to delay an activity that is scheduled to begin **before** the time period in question. The delay procedure used is the same, except that the activity delay will be greater than one time period; therefore, plenty of float is required for that activity's delay.

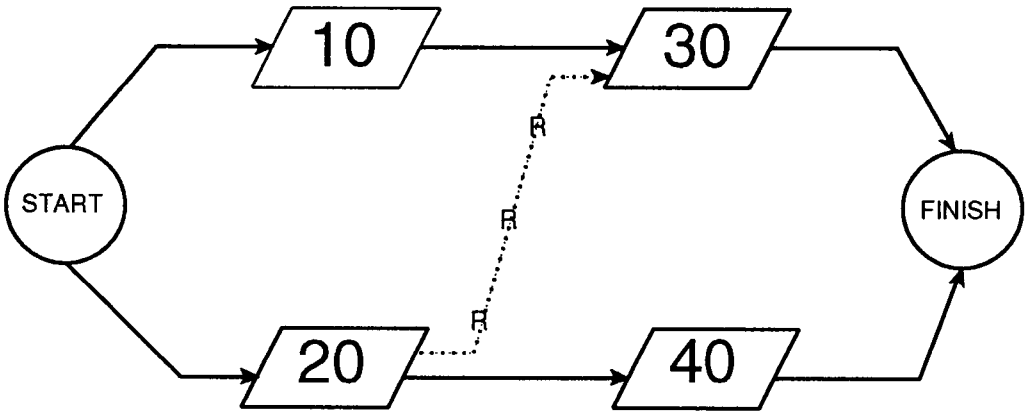

Figure B-3. Resource dummy arrows

The third variation is a deviation from the second priority of step 2 in the resource-constraining process. If a combination of activities provides sufficient resources to meet the constraint and each has plenty of float, delay each of these activities rather than one activity that is critical or nearly critical.

A project manager can use these techniques after he fully understands the basic techniques of resource constraining. For any project with insufficient resources, the project manager must ultimately decide which activities to delay. An understanding of the intricate interaction between each activity will enable the manager to make informed decisions and successfully complete the project.

SAMPLE PROBLEM

As a project supervisor, you developed the logic diagram and ES schedule shown in Figure B-4, page B-6. During your initial planning, the number of available squads (14) was the only critical resource. Later you were tasked to provide three squads to support post cleanup during the same time period. This has reduced the number of squads available for the project to 11. You must resource constrain the project to 11 squads by completing the following tasks:

- Resource constrain the ES schedule (Part 1).
- Update the logic network (Part 2).
- Update the ES schedule (Part 3). Determine if the reduced number of squads will affect the project duration.

PART 1

After constraining the ES schedule, you find that there are two resource delays (R) and one logic delay (L), as shown in Figure B-5, page B-7. Activity 15 cannot start until the resource from activity 20 becomes available. When delayed, activity 15 moves into interfering float. This causes a logic delay of three days for activities 35 and 40. (Activity 45 is unaffected.) When time period 6 is constrained, you find that activity 40 must be delayed one additional day for insufficient resources. Although activity 40 was initially delayed due to logic, it will receive an "R" delay. The resource needed for activity 40 must come from activity 30.

PART 2

The two resource flow arrows are incorporated into the logic network by drawing dashed arrows and a superimposed "R", as shown in Figure B-6, page B-7. This establishes two new paths in the network and changes the time analysis. Whereas the old critical path consisted of nodes 25 and 55, there is now an additional critical path consisting of nodes 20, 15, 35, and 55.

PART 3

A new ES schedule must incorporate the changes which were made in the logic network. After updating the activity numbers (step 10), time frames (step 11), and float calculations (step 12), you prepared an ES schedule as shown in Figure B-7, page B-8. Activities 20 and 30 changed follow-on activities. Time frames (ES and/or LF) changed for activities 15, 20, 35, and 40. Interfering float calculations, however, did **not** change for the activities with float (activities 10, 30, 40, 45, and 55).

You have now constrained the resources for this project. Three additional activities (15, 20, and 35) have become critical. None of the changes resulted in any activity being delayed beyond its LF (right bracket). Therefore, the project duration will not change.

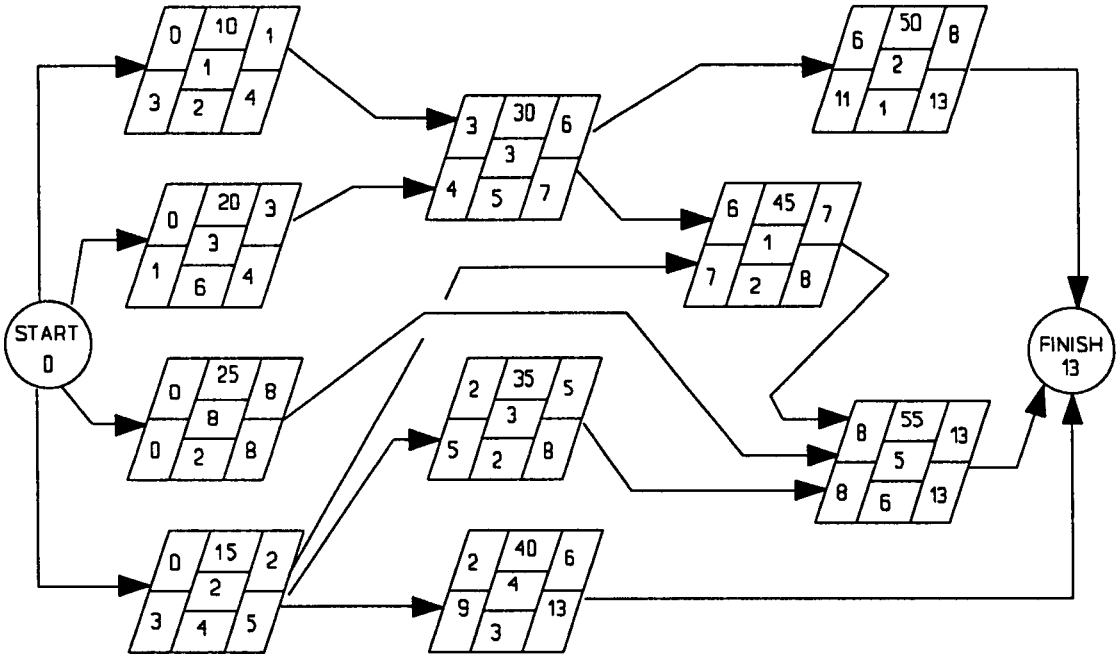

NETWORK NUMBER	EARLY START SCHEDULE																	
	1	2	3	4	5	6	7	8	9	10	11	12	13	14	15	16	17	18
10(30)	2s			X														
15(35,40,45)	4s	4s	X	X	X													
20(30)	6s	6s	6s	X														
25(55)	2s	2s	2s	2s	2s	2s	2s	2s										
30(45,50)				5s	5s	5s	X											
35(55)			2s	2s	2s													
40			3s	3s	3s	3s												
45(55)							2s											
50							1s	1s										
55									6s	6s	6s	6s	6s					
Squads(S)	14	12	13	12	12	10	5	3	6	6	6	6	6					

Figure B-4. Sample problem

NETWORK NUMBER	EARLY START SCHEDULE																	
	1	2	3	4	5	6	7	8	9	10	11	12	13	14	15	16	17	18
10(30)	2S																	
15(35,40,45)				4S	4S	R												
20(30)	6S	6S	6S	X														
25(55)	2S	2S	2S	2S	2S	2S	2S	2S										
30(45,50)				5S	5S	5S	X											
35(55)						2S	2S	2S	L									
40							3S	3S	3S	3S				R				
45(55)							2S											
50							1S	1S										
55									6S	6S	6S	6S	6S					
Squads(S)	~~14~~	~~12~~	~~13~~	~~12~~	~~12~~	~~10~~	~~5~~	~~3~~	~~6~~	~~6~~	6	6	6					
	10	8	8	11	11	9	10	8	9	9								

Figure B-5. Resource-constrained early start schedule

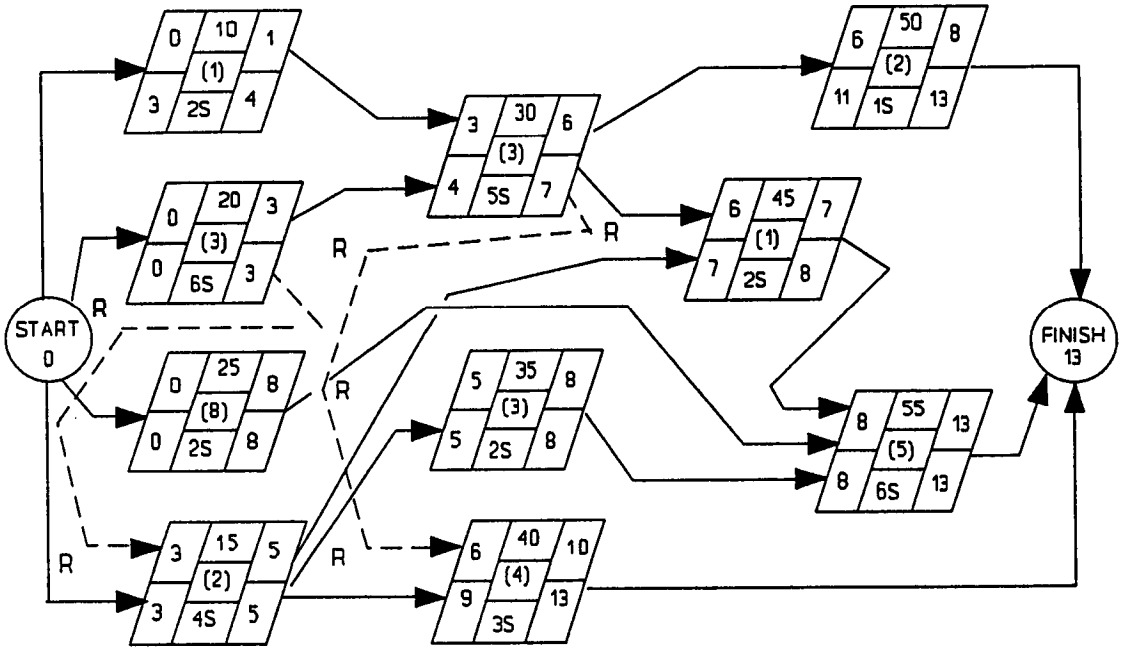

Figure B-6. Updated logic network

NETWORK NUMBER	EARLY START SCHEDULE																	
	1	2	3	4	5	6	7	8	9	10	11	12	13	14	15	16	17	18
10(30)	2S			X														
15(35,40,45)				4S	4S	R												
20(15,30)	6S	6S	6S															
25(55)	2S	2S	2S	2S	2S	2S	2S	2S										
30(40,45,50)				5S	5S	5S	X											
35(55)						2S	2S	2S	L									
40							3S	3S	3S	3S				R				
45(55)							2S											
50							1S	1S										
55									6S	6S	6S	6S	6S					
Squads(S)	~~14~~	~~12~~	~~13~~	~~12~~	~~12~~	~~10~~	~~5~~	~~3~~	~~6~~	~~6~~	6	6	6					
	10	8	8	11	11	9	10	8	9	9								

Figure B-7. Updated early start schedule

USE OF COMPUTERS

Off-the-shelf project management software is available which will automatically constrain or cross-level resources. However, in order to market this software to a broad spectrum of users, the programs generally use criteria to resource constrain that is not acceptable for military construction where the highest priority is usually to avoid extending the overall project duration. It is highly recommended that military managers manually use the 12-step constraining process listed above, even when using a computer program.

CONVERSION FACTORS

APPENDIX C

Table C-1. Metric conversion factors

Multiply:	By:	To Obtain:
Centimeters	0.0328	feet
Centimeters	0.394	inches
Cubic centimeters	0.061	cubic inches
Cubic feet	0.0283	cubic meters
Cubic inches	16.4	cubic centimeters
Cubic meters	35.3	cubic feet
Cubic meters	1.31	cubic yards
Cubic yards	0.765	cubic meters
Feet	0.305	meters
Gallons	0.00379	cubic meters
Inches	0.0254	meters
Liters	0.0353	cubic feet
Kilograms	0.0011	tons
Kilograms	2.2	pounds
Meters	3.28	feet
Miles	1.61	kilometers
Pounds	0.454	kilograms
Tons (short, 2,000 pounds)	907	kilograms

TM 5-302 contains expanded tables of equivalents useful to the engineer construction estimator in the theater of operations.

Table C-2. Conversion and waste factors

Material	Conversion	Percent Waste
Concrete construction		
Concrete (1:2:4)		
Cement	6.0 sack/cu yd	10
Fine aggregate	0.6 cu yd/cu yd	10
Coarse aggregate	1.0 cu yd/cu yd	10
Curing compound	0.5 gal/100 sq ft	10
Forms		
Footings and piers		
2 x 4	1.5 lin ft/sq ft of contact surface	20
2 x 8	0.2 lin ft/sq ft of contact surface	10
2 x 12	0.7 lin ft/sq ft of contact surface	5
Ground slabs		
1 x 4	0.1 lin ft/sq ft area	20
2 x 4	0.1 lin ft/sq ft are	5
Walls and columns		
2 x 4	1.3 lin ft/sq ft of contact surface	20
Plywood (50% reuse)	0.5 sq ft/sq ft of contact surface	5
Beams and suspension slabs		
1 x 6	0.3 lin ft/sq ft of contact surface	5
2 x 4	0.5 lin ft/sq ft of contact surface	20
2 x 10	0.1 lin ft/sq ft of contact surface	10
4 x 4	0.4 lin ft/sq ft of contact surface	5
4 x 6	0.1 lin ft/sq ft of contact surface	5
Plywood	0.5 sq ft/sq ft of contact surface	5
Form oil	0.5 gal/100 sq ft	10
Tie wire	12.0 lb/ton	10
Snap tie wedges	0.1 ea/sq ft of contact surface	5
Snap ties	0.1 ea/sq ft of contact surface	5
She bolts	0.1 set/sq ft of contact surface	5
Nails (bd ft lumber + sq ft plywood, ordered as thousand ft bd measure)		
6d box	6 lb/thousand ft bd measure	10
8d common	4 lb/thousand ft bd measure	10
16d common	6 lb/thousand ft bd measure	10
20d common	2 lb/thousand ft bd measure	10
6d duplex	4 lb/thousand ft bd measure	10
8d duplex	9 lb/thousand ft bd measure	10
16d duplex	9 lb/thousand ft bd measure	10
Reinforcing steel		
#3	0.4 lb/lin ft	10
#4	0.7 lb/lin ft	10
#5	1.0 lb/lin ft	10
#6	1.5 lb/lin ft	10
#7	2.0 lb/lin ft	10
#8	2.7 lb/lin ft	10
Trim		
6d finish	7 lb/1,000 lin ft	10
8d finish	14 lb/1,000 lin ft	10

Table C-2. Conversion and waste factors (continued)

Material	Conversion	Percent waste
Lumber		
Framing	--	15
Sheathing	--	25
Flooring	--	25
Roofing	--	25
Wall board	--	15
Trim	--	10
Steel erection		
Rivets	25 ea/ton	10
Bolts (field)		
Temporary	5 ea/ton	5
Permanent	25 ea/ton	5
Sheet metal	--	10
Roofing		
Corrugated steel (6-in end lap)		
26-in width	115 sq ft/sq	10
27.5-in width	122 sq ft/sq	15
Wood shingles		
16-in (4-in exposure)	900 ea/sq	15
18-in (6-in exposure)	600 ea/sq	15
24-in (8-in exposure)	450 ea/sq	15
Nails (4d)	4 lb/1,000 shingles	15
Built-up roofing (4-ply)		
Sheathing paper	1 sq/sq	20
Felt	4 sq/sq	20
Pitch	125 lb/sq	10
Gravel	400 lb/sq	10
Tiling		
Floor tile		
Asphalt, vinyl, asbestos	--	10
Primer	5 gal/1,000 sq ft	20
Adhesive	10 gal/1,000 sq ft	20
Cleaner	5 gal/1,000 sq ft	20
Wax	5 gal/1,000 sq ft	20
Acoustic tile		
Tile	--	10
Cement	25 gal/1,000 sq ft	20
Glass and glazing		
Glass		
8 x 12	75 panes/box	10
10 x 16	45 panes/box	10
12 x 20	30 panes/box	10
14 x 24	22 panes/box	10
16 x 28	16 panes/box	10
Glazing clips		
Putty		
8 x 12	0.6 lb/pane	20
10 x 16	0.8 lb/pane	20
12 x 20	0.9 lb/pane	20
14 x 24	1.1 lb/pane	20
16 x 28	1.4 lb/pane	20

Table C-2. Conversion and waste factors (continued)

Material	Conversion	Percent waste
Caulking	2 gal/1,000 lin ft	10
Primer	13 gal/1,000 lin ft	10
Compound (1/2 x 1/2)		
Painting		
Metal		
Enamel	0.2 gal/100 sq ft	10
Zinc white	0.2 gal/100 sq ft	10
White lead	0.2 gal/100 sq ft	10
Wood		
Enamel	0.2 gal/100 sq ft	10
Zinc white	0.2 gal/100 sq ft	10
White lead	0.3 gal/100 sq ft	10
Varnish	0.2 gal/100 sq ft	10
Flat	0.2 gal/100 sq ft	10
Gloss	0.3 gal/100 sq ft	
Brick, concrete, plaster		
Enamel	0.2 gal/100 sq ft	
Zinc white	0.3 gal/100 sq ft	
White lead	0.4 gal/100 sq ft	
Varnish	0.2 gal/100 sq ft	
Flat	0.3 gal/100 sq ft	
Gloss	0.4 gal/100 sq ft	
Size	0.3 gal/100 sq ft	
Primer	0.3 gal/100 sq ft	
Calcimine	0.4 gal/100 sq ft	
Plumbing		
Pipe		
Cast iron	lin ft	10
Clay, vitrified	lin ft	10
Asbestos cement	lin ft	10
Plastic	lin ft	10
Wrought iron, G.V., B.I.	lin ft	10
Copper	lin ft	10
Grooved steel (invasion)	lin ft	10
Fittings		
Cast iron		
2" and smaller	ea	10
6" and smaller	ea	10
8" and smaller	ea	5
Clay and concrete		
4" to 10"	ea	10
12" to 24"	ea	5
Plastic	ea	10
Wrought iron	ea	10
Copper	ea	10
Grooved steel	ea	5
Valves		
Globe and gate		
2" and smaller	ea	5
2 1/2" and larger	ea	3
Check		
2" and smaller	ea	3
2 1/2" and larger	ea	2
Special applications	ea	0

Table C-2. Conversion and waste factors (continued)

Material	Conversion	Percent waste
Solder, soft		
Copper fittings		
3/8"	0.5 lb	
1/2"	0.75 lb	
3/4"	1.0 lb	
1"	1.25 lb	
1 1/4"	1.7 lb	
1 1/2"	1.8 lb	
2"	2.4 lb	
2 1/2"	3.2 lb	
3"	3.9 lb	
3 1/2"	4.5 lb	
4"	5.5 lb	
Solder, hard		
NOTE: Hard solder requirements equal 75 percent of soft per individual size 100 joints.		
Flux		
Soft solder	10 lb/100 lb	10
Silver braze (hard)	7.5 lb/75 lb	2
Lead and oakum		
Joint size	lb/joint	
2"	2 lb	
3"	3 lb	
4"	4 lb	
5"	5 lb	
6"	6 lb	
Oakum	1 lb per 5-lb lead	0
Electrical		
Conduit	ft	5
Wire	ft	10
Fittings	ea	5
Steel		
Bolts (field)		
Temporary	5 ea/ton	5
Permanent	25 ea/ton	5
Rivets (field)	25 ea/ton	10
Sheet		
Galvanized sheet		10
Copper sheet		10
Aluminum		10
Black iron		10
Electrode, mild steel, carbon, and stainless	lb/lin ft	10
1/8" thick	0.064	
3/16" thick	0.113	
1/4" thick	0.158	
5/16" thick	0.232	
3/8" thick	0.345	
1/2" thick	0.581	
5/8" thick	0.874	
3/4" thick	1.395	
1" thick	2.148	
NOTE: Above figures are for fillets, butts, and groove welds with no backing strips.		

TYPICAL PLANT LAYOUTS APPENDIX D

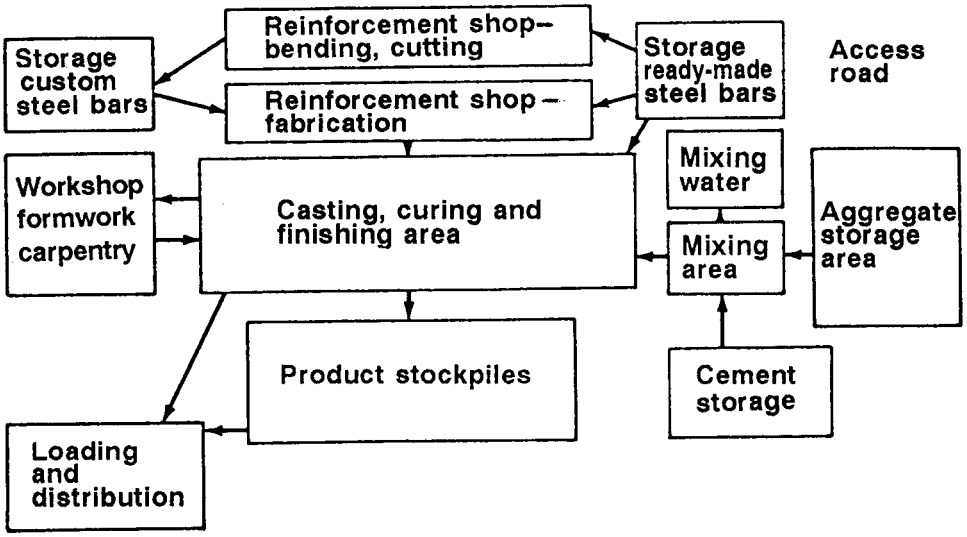

Figure D-1. Layout of precast-concrete yard

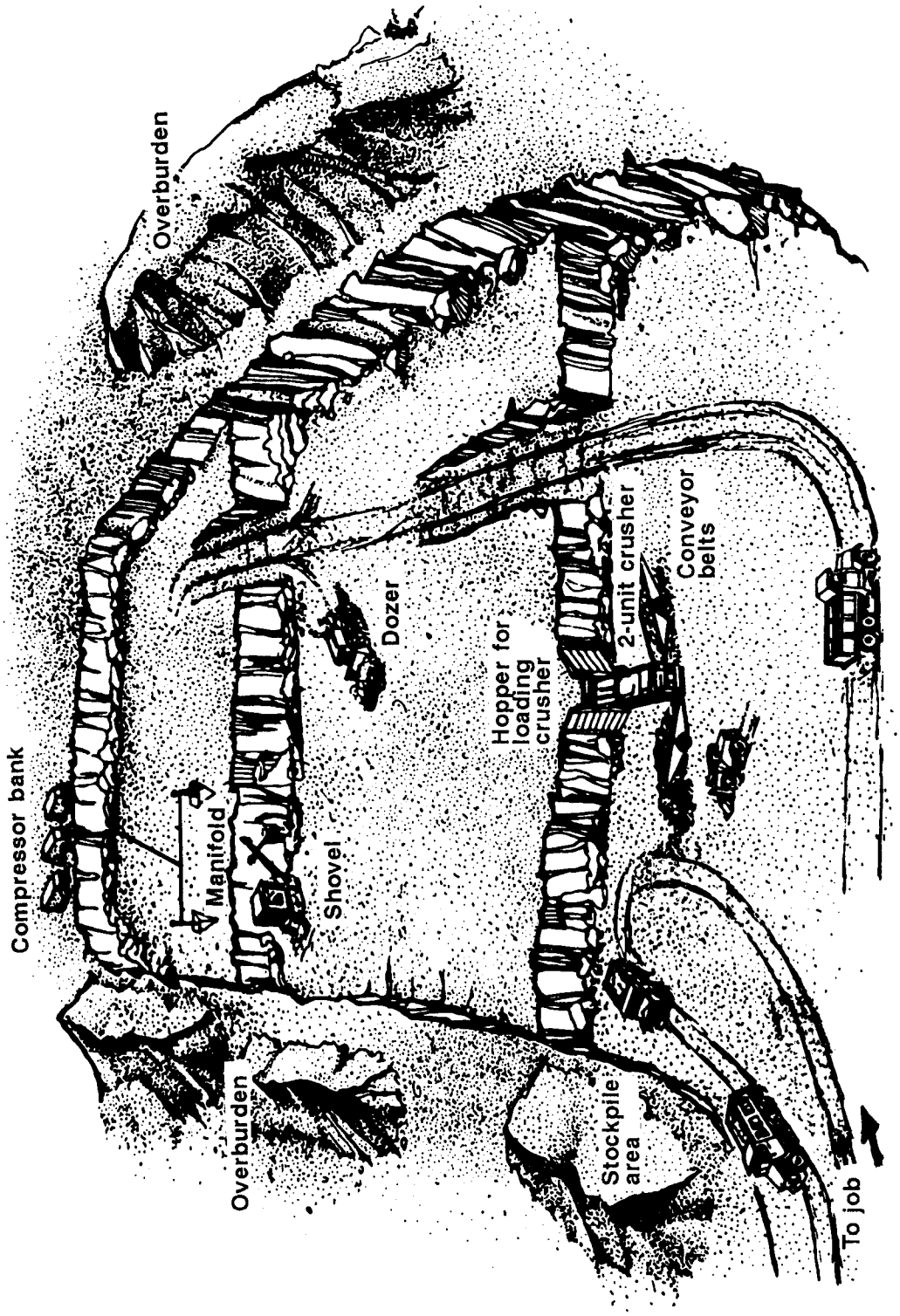

Figure D-2. Layout of quarry

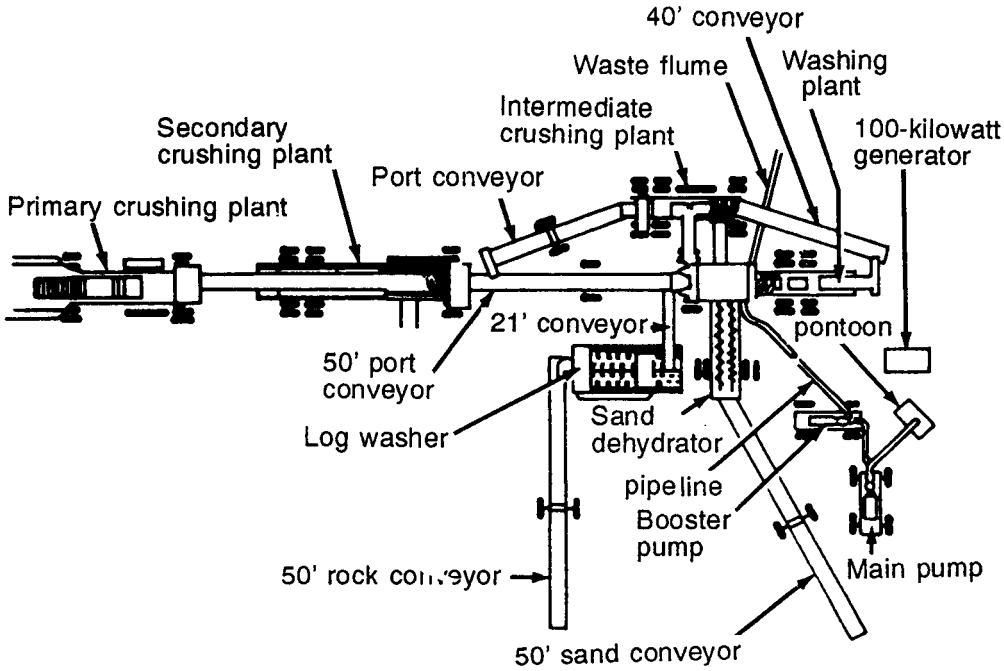

Figure D-3. Layout of rock-crushing and screening plant

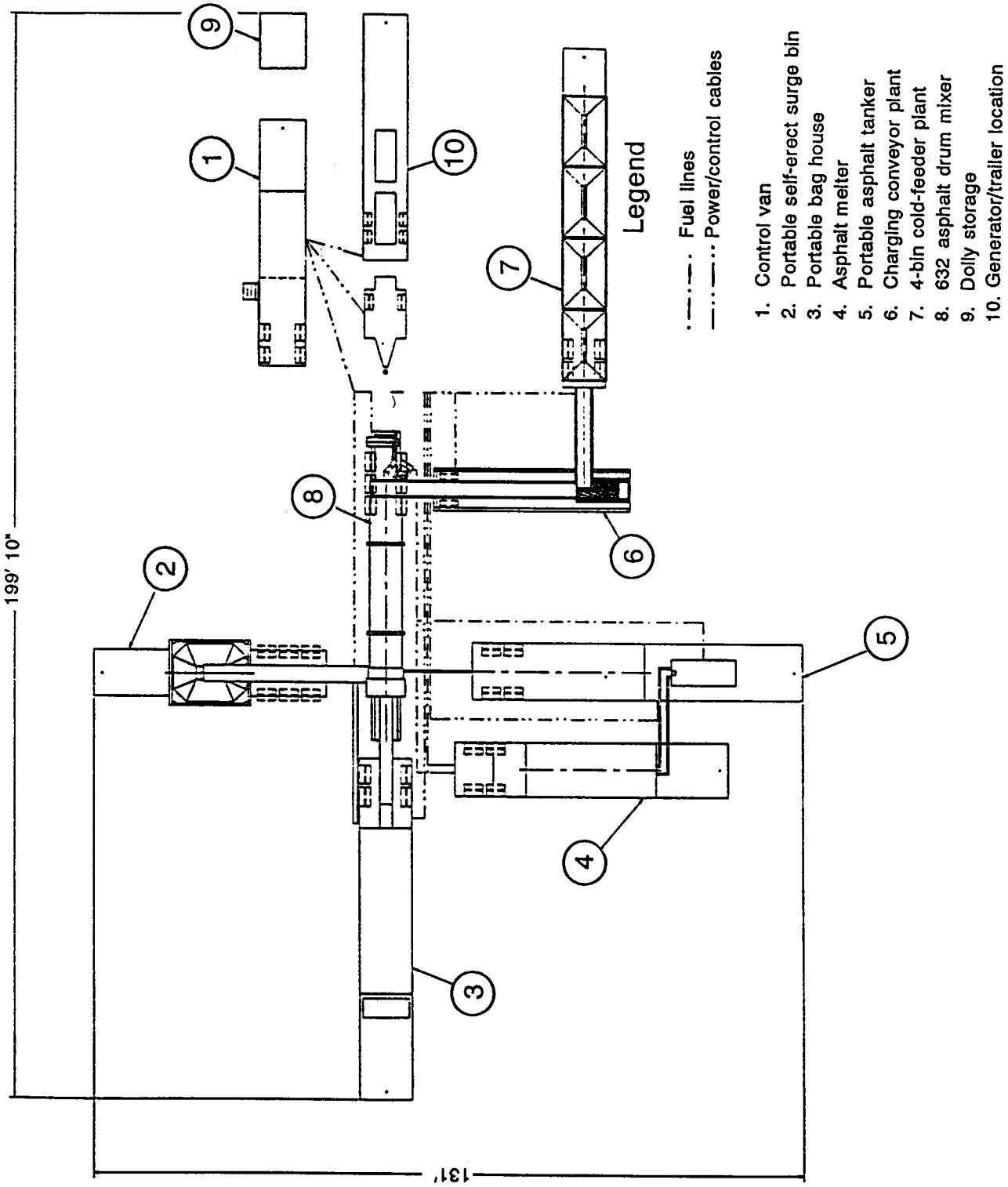

Figure D-4. Layout of central mix plant for asphaltic concrete

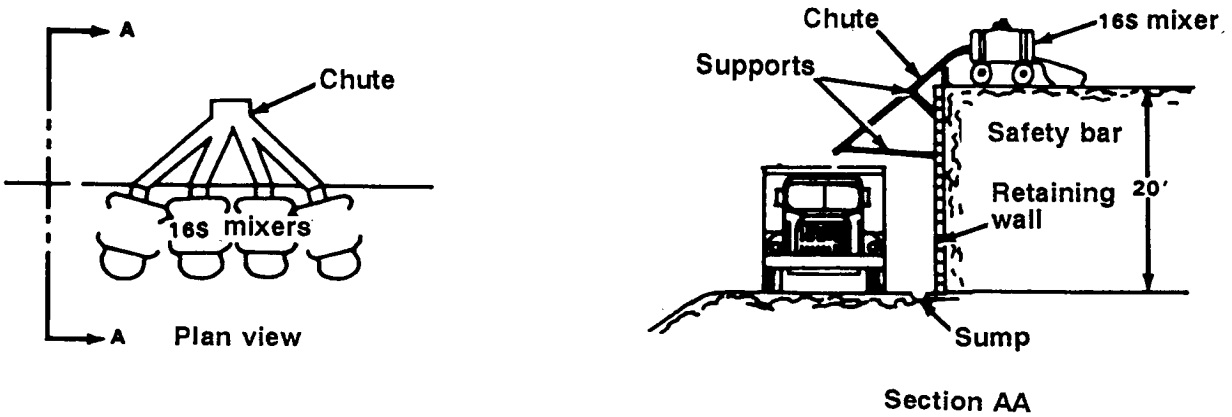

Figure D-5. Layout of central mix plants for portland cement concrete

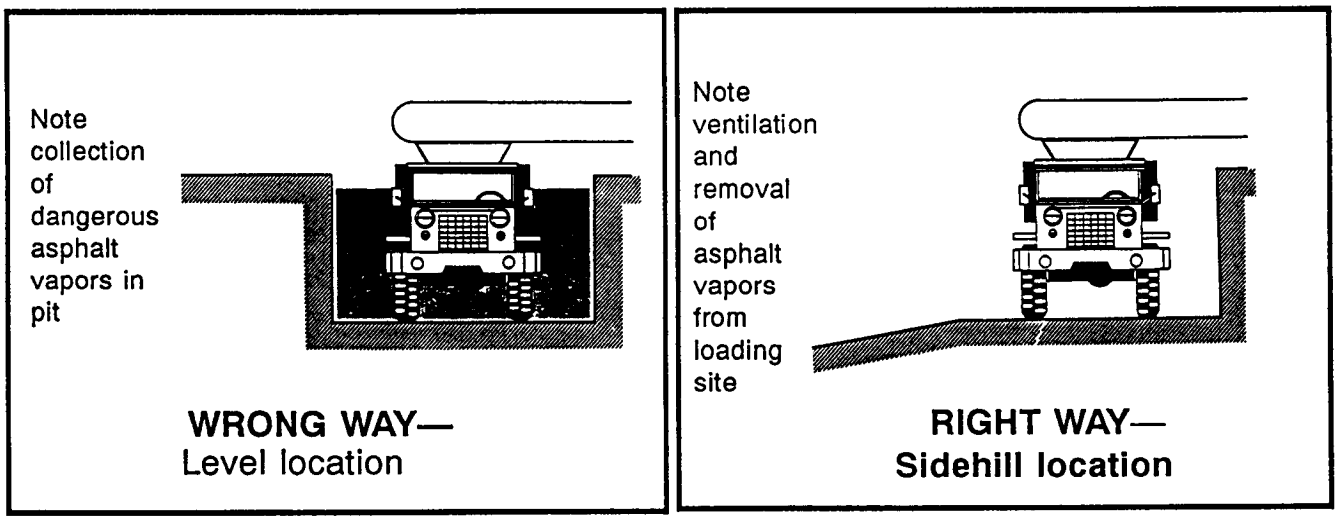

Figure D-6. Proper asphalt plant location to avoid explosion hazard

Table D-1. Asphalt plant operation

Work element description	Unit	Man-hours/unit
Set up and dismantle plant	ea	560
Operation of asphalt plant	1,000 tons	80
Hauling asphalt to job	1,000 ton mile	48

Suggested crew size:
Setup and dismantle plant: 4 operators, 1 electrician, and 1 mechanic.
Hauling asphalt to job site: 5 operators required, dependent upon scope of job.
Maintenance (support): 2 utilities workers, 1 electrician, and 1 mechanic.

NOTES:
1. Figures are based on BLH 5,000 (125-tons per hour) batch plant.
2. Site preparation and concrete curing time not included in table.

Table D-2. Rock-crushing plant operation

Work element description	Units	Man-hours/unit
Set up and dismantle	ea	320
Operating crushing plant	1,000 cu yd	160
Stockpiling crushed material	1,000 cu yd	24
Hauling crushed material to job	1,000 cu yd	48

Suggested crew size:
Setup and dismantle plant: 7 operators, 1 mechanic, and 1 electrician.
Operating crushing plant: 2 operators.
Stockpiling crushed material: 4 operators.
Maintenance (support): 1 mechanic and 1 electrician.

NOTES:
1. The production figure is based upon a 75-tons per hour plant operating at 50 percent of rated capacity crushing granite at 3,000 pounds per cubic yard. For plants of other sizes, use 50 percent of rated capacity and the size of your crew for calculations.
2. Production figures may have to be adjusted according to the type of material being processed, and with other varying circumstances. For example, coral weighs (approximately) 2,000 pounds per loose cubic yard.

EQUIPMENT AND TOOL CHECKLIST APPENDIX E

CONCRETE WORK

Cement finishing towels
Wooden or metal floats
Edgers
Jointers
Concrete mixer
Transmit mix trucks
Batch plant
Weighing devices
Hoisting equipment
Wheelbarrow
Belt conveyor
Scaffolding
Heating equipment (cold weather)
Transportation equipment
Curing equipment required
Boots and gloves, kneepads
Vibrator (air-gas-elect)
Hand tools for forming
Sledge hammers
Picks
Trenching equipment
Hand levels (4-foot, 2-foot, and so forth)
Pliers
Shovels
Rules (6-foot)
Aggregate production equipment
Cement storage requirements
Pumps (keep excavations free from water)
Mechanical finishing trowels
Concrete pump
Gunite machine
Water hose
Subbase compaction equipment
Wrecking bars
Pry bars
Concrete paving machine
Pointing or cleaning requirements
Power tools for formwork
Grinding tools
Field office requirements

MASONRY

Brick towels
Line and line holders
Brick hammers
Pointing trowels
Mason's levels (4-foot)
Block saw and replacement blade
Joint finishing tools
Scaffolding
Mortarboards
Mixing bins or boxes
Mortar hoes
Shovels
Mortar mixer
Pliers or side cutters
Squares (framing)
Rules (6-foot)
Tapes (50- or 100-foot)
Water hose or barrels
Transportation equipment

REINFORCING BARS

Folding rules (6-foot)
Leather gloves and jackknife
Side-cutting pliers (7-inch)
Tape measure (50-foot)
Bolt cutter (24-inch)
Hoisting equipment as required
Claw hammer
Oxyacetylene cutting equipment
Arc-welding equipment
Portable bender
Hickey
Set of blocks 3/4-inch manila line
Snatch block (for hand hoisting)
Transportation equipment
Sand screens
Floats
Rubber
Cork
Angle
Wooden
Carpet
Curing or drying equipment
Electric blowers, fan, and so forth

PLASTER

Hoisting equipment
Scaffolding requirements
Trowels
Margin
Pointing
Pipe
Angle
Plasterer's
Brushes
Browning
Finish
Tool
Straightedges
Darbies
Hawks
Mixing machine
Wheelbarrow
Mortarboards
Pliers, shears, bolt cutters, and so forth for metal lath
Hand tools for wood lath
Mechanical plastering machine
Material storage requirements
Transportation equipment
Safety equipment such as gloves and goggles
Water hose or pails
Transportation equipment
Expansion bit
Field-office requirements
Storage-area requirements

PAINT

Brushes
Spray gun
Hoses (air-paint)
Compressor
Scaffolding
Drop cloths
Paintpots
Safety equipment
Goggles
Face mask
Safety mask
Transportation equipment
Hoisting equipment
Putty knives
Paint scrapers
Wire brushes
Dusting brushes
Sanders (hand power)
Storage requirements (tarps and so forth)
Field-office requirements
Spare parts for spray equipment
Hose fittings
Paint gun extension
Paint mixer
Wrenches

CARPENTRY

Hammers and handles
Saws, crosscut, rip, keyhole, and compass
Ripping chisels
Wood chisels
Brace and bits
Squares, framing, "T," and combination
Plumb bob
Hand levels
Screwdrivers
Files
Sharpening stones
Wrecking bars
Pliers . . . . .
Rules (6-foot)
Tapes (50- and 100-foot)
Dividers
Hatchets
Nail aprons
Pencils
Hacksaws
Power equipment
Radial arms saw
Table saw
Jointers
Planers
Shapers
Drill press
Grinders
Chain saws
Routers
Portable electrical hand saws
Sanders
Adzes
Sledge hammers
Wrenches
Scaffolding
Hoisting equipment

SHOP

At least one brake, 16-gage capacity
1 slip roll for cylindrical work
1 shear, 16-gage capacity
1 sheet-metal forming machine
1 drill press
1 electrial hand shear
Hand electrical drill with twist drills
Hand tools per worker
Toolbox with:
- Combination square (12-inch)
- Steel tape (6-foot)
- Chisel, cold
- Punch center
- Rivet sets (set)
- Hand groover (set)

Divider
Scratch awl
Edge scribe
Screwdriver
Pliers, combination
File
Punch set (hand)
Snips
Wood mallet
Ball peen hammer
Setting hammer
Soldering iron
Hacksaw
Vise grip pliers
Transportation equipment (crew materials)

WELDING

Arc welding machines (such as-accessories with hand tools)
Welder for shop can be permanent (electrical drive)
Oxyacetylene welding and cutting ouffits
Vise
Anvil
Forge
Grinding wheel (stationary)
Drill press with complete set drill bits
Electric hand drill with complete set drill bits
Protective equipment
Gloves (leather gauntlet)
Leather jackets
Leather aprons
Arc welding hoods (with clear and color lens)
Acetylene welding goggles (with clear and color lens)
Face shields (clear for grinding)

EARTH WORK

Dump trucks
Power shovels
Draglines
Grader
Rollers (grid-sheepsfoot, wobble wheel)
Cranes
Quarry equipment
Compressor
Rock drills
Rock dumps
Crusher
Dozers
Scrapers
Pushcarts
Lubrication truck (field)
Water truck
Backhoe
Ditcher
Earth auger
Ripper
Jeep
Fuel truck
Light standards and generators
Spare parts and tires
Spare cables
Air and water hose
Low-bed trailers and tractors
Stake trucks
High-bed trailers and tractors
Field-office equipment
Storage-area materials
Transportation equipment:
  Buses
  Stakes
  Pickups
  Jeeps
Operator's manuals
Repair parts manuals

PAVEMENT WORK

Graders
Asphalt plant
Dump trucks
Asphalt paver
Steel-wheel roller
Concrete paver
Concrete spreader
Concrete finisher
Transit mix trucks
Concrete mixers
Crusher
Quarry equipment
Compressor
Rock drills
Stake trucks
Forklifts
Front-end loader
Dozers
Rollers for compaction
Cranes
Repair parts
Field-office requirements
Transportation equipment
Storage requirements
Sweeper, street
Water truck
Water and air hose
Hand levels
Miscellaneous hand tools for stake setting
Aggregate drying plant
Aggregate washing facilities
Operator's manuals
Repair parts manuals

OVERHEAD ELECTRICAL LINES

Block
Climbing gear
Brace bits
Hammers
Lineman's bag (tool)
Center punches
Pliers, long-nose
Pliers, lineman's
Fire pot
Lineman's gloves
Safety strap
Rubber gloves
Wrenches
Knives

Plier, diagonal
Screwdrivers
Toolboxes
Equipment requirements
Storage requirements
Ladders
Goggles
Lighting equipment
Saws, electrical, hand
Chain saws
Line truck
Shovels
Pole spikes
Auger truck
Rules (6-foot)
Tapes (50-foot, 100-foot)
Rope

INTERIOR WIRING

Plier's diagonal
Plier's lineman's
Pliers, long-nose
Rules (6-foot)
Screwdrivers
Lineman's tool bag
Wrenches
Claw hammers
Brace and bits
Auger bits
Keyhole and compass saw
Files
Soldering irons
Electrician's knives
Wire tapes
Circuit hickeys
Blowtorch
Fire pot
Ladle
Testing equipment
Crosscut saw
Scaffolding materials
Storage requirements
Safety gear
Transportation requirements
Toolboxes
Tool belts

SOIL PIPE AND INTERIOR PLUMBING

Oil can
Cold chisels
Round-nose chisels
Hacksaw blade
Half-round file, bastard, 10-inch
Handle, file
Hacksaw frame, adjustable
Saw net, keyhole and compass
Pliers, slip (8-inch)
Hammer, claw
Hammer, ball (1 1/2 pound)
Hammer handle (14-inch)
Wrench pipe (18-inch)
Wrench pipe (10-inch)
Wrench pipe (14-inch)
Screwdrivers
Handle, hammer, machine
Mechanic's toolbox
Level, 2-plumb adjustment (28-inch)
Rule, wood folding (72-inch)
Wire brush
Shear, type "D"
Reamer, pipe burring
Cutter, pipe (4 x 6)
Cutter, pipe (1/8- to 2-inch)
Star drills, 1 set

TOOLS

Igniters (acetylene torch)
Marking crayon (soapstone)
Wire brush
Chipping hammer
Files of various types and sizes
Screwdrivers
Hacksaw with blades
Square, combination
Square, framing
Square, tri
Cold chisels
Center punch
Crescent wrenches
"C" clamps (various sizes)
Chain hoist

CONSUMPTION FACTORS FOR EXPENDABLE SUPPLIES

APPENDIX F

Nails	
Framing	
8-penny common	5 lb/thousand bd ft measure
1O-penny common	15 lb/thousand bd ft measure
16-penny common	10 lb/thousand bd ft measure
Sheathing (8-penny common)	30 lb/thousand bd ft measure
Flooring (8-penny common)	30 lb/thousand bd ft measure
Roofing (8-penny common)	30 lb/thousand bd ft measure
Wallboard (6-penny common)	15 lb/1,000 sq ft trim
4-penny finish	3 lb/1,000 lin ft
6-penny finish	7 lb/1,000 lin ft
8-penny finish	14 lb/1,000 lin ft
Mortar	
Block (8 X 16) - 3/8 joint	
4-inch wall	0.1 cu yd/100 blocks
8-inch wall	0.2 cu yd/100 blocks
12-inch wall	0.3 cu yd/100 blocks
Brick (2 1/4 x 8) - 3/8 joint	
4-inch wall	0.3 cu yd/1,000 brick
8-inch wall	0.4 cu yd/1,000 brick
12-inch wall	0.4 cu yd/1,000 brick
Structure tile (12 X 12) - 3/8 joint	
4-inch wall	0.2 cu yd/100 tile
8-inch wall	0.3 cu yd/100 tile
12-inch wall	0.5 cu yd/100 tile
Putty for Glass	
8 x 1 2	0.6 lb/pane
10 X 16	0.8 lb/pane
12 x 20	0.9 lb/pane
14 X 24	1.1 lb/pane
16 X 28	1.4 lb/pane
Caulking	
Primer	2 gal/1,000 lin ft
Compound (1/2 x 1 /2)	13 gal/1,000 lin ft
Painting	
Metal	
Enamel	0.2 gal/100 sq ft
Zinc white	0.2 gal/100 sq ft
White lead	0.2 gal/100 sq ft

wood

Enamel	0.2 gal/100 sq ft
Zinc White	0.2 gal/100 sq ft
White lead	0.3 gal/l00 sq ft
Varnish	0.2 gal/100 sq ft
Flat	0.2 gal/100 sq ft
Gloss	0.3 gal/100 sq ft

Brick, Concrete, Plaster

Enamel	0.2 gal/l00 sq ft
Zinc White	0.3 gal/l00 sq ft
White lead	0.4 gal/100 sq ft
Varnish	0.2 gal/100 sq ft
Flat	0.3 gal/100 sq ft
Gloss	0.4 gal/l00 sq ft
Size	0.3 gal/100 sq ft
Primer	0.3 gal/100 sq ft
Calcimine	0.4 gal/l00 sq ft

GLOSSARY

5T	5-ton truck
AAHTO	American Association of State Highway and Transportation Officials
AFCS	Army Facilities Components System
AFPAM	Air Force Pamphlet
AR	Army regulation
ASME	American Society of Military Engineers
ASTM	American Society for Testing and Materials
ATTN	attention
bd	board
B.I.	black iron
bldg	building
BLH	manufacturer's model identification
Bn	battalion
BOM	bill of materials
BTU	British thermal unit
CH	clays, high compressibility (LL > 50)
CL	clay, low compressibility (LL < 50)
co	company
CPM	critical path method
CPT	captain
cu	cubic
d	penny
DA	Department of the Army
DD	Department of Defense
dur	duration
ea	each
eff	effort, efficient
EF	early finish
EN	engineer
Engr	engineer
equipment hours	Productive hours of an item of equipment; not the hours shown on the equipment's hour meter.
ES	early start
F	Fahrenheit
FF	free float
FM	field manual
fr	from
ft	feet
gal	gallon
GC	clayey gravel
GM	silty gravel
GP	poorly graded gravel

GW	well-graded gravel
G.V.	galvanized
hp	horsepower
hr	hour
IF	interfering float
in	inch
L	logic delay
lb	pound
LF	late finish
lin	linear
LL	liquid limit
LOC	lines of communication
LS	late start
MAJ	major
MARC	Manpower Requirements Criteria
MH	silt, high compressibility (LL > 50)
min	minute
ML	silt, low compressibility (LL < 50)
MO	Missouri
mph	miles per hour
NCO	noncommissioned officer
NCOIC	noncommissioned officer in charge
No.	number
OC	on center
OH	organic soil, high compressibility (LL > 50)
OJT	on-the-job training
OL	organic soil, low compressibility (LL $\leq$ 50)
PECS	packaged expendable contingency supply
PIB	proceeded immediately by
Plt	platoon
pr	pair
prefab	prefabricated
psi	pounds per square inch
psig	pounds per square inch gauge
PVC	polyvinyl chloride
quant	quantity
R	resource delay
RST	reinforced steel tie
S3	Operations and Training Officer (US Army)
SC	slow curing
scp ldrs	scoop loaders
sec	second
SEE	small emplacement excavator
SF	sheepsfoot
SL	scoop loader
SM	silty sands and poorly graded sand-silt mixture
SOP	standing operating procedure
SP	poorly graded sand
SQ	squad
sq	square
STD	standard
SW	well-graded sand
TCMS	Theatre Construction Management System

TF	total float
TM	technical manual
TO	theater of operations
TOE	table(s) of organization and equipment
TOT	total
TPH	tons per hour
US	United States
USAES	United States Army Engineer School
Vol	volume
w	watt
yd	yard
#	number

REFERENCES

Sources Used

These are the sources quoted or paraphrased in this publication.

Military Publications

AR 570-2, *Manpower Requirements Criteria (MARC) - Tables of Organization and Equipment,* 15 May 1992.
FM 5-34. *Engineer Field Data.* 14 September 1987.
FM 5-410. *Military Soils Engineering. 23* December 1992.
FM 5-430-00-1/AFPAM 32-8013, Vol 1. *Planning and Design of Roads, Airfields, and Hellports in the Theater of Operations: Volume 1, Roads.* To be published within six months.
FM 5-742. *Concrete and Masonry.* 14 March 1985.
TM 5-301-1. *Army Facilities Components System - Planning (Temperate).* 27 June 1986.
TM 5-301-2. *Army Facilities Components Sysstem - Planing (Tropical).* 27 June 1986.
TM 5-301-3. *Army Facilities Components System - Planning (Frigid).* 27 June 1986.
TM 5-301-4. *Army Facilities Components System - Planning (Desert).* 27 June 1986.
TM 5-302-1. *Army Facilities Components System: Design, Volume 1.* 28 September 1973.
TM 5-302-2. *Army Facilities Components System: Design, Volume 2.* 28 September 1973.
TM 5-302-3. *Army Facilities Components System: Design, Volume 3,* 28 September 1973.
TM 5-302-4. *Army Facilities Components System: Design, Volume 4.* 28 September 1973.
TM 5-302-5. *Army Facilities Components System: Design, Volume 5.* 28 September 1973.
TM 5-303. *Army Facilities Components System - Logistic Data and Bill of Materiel.* 01 June 1986.
TM 5-304. *Army Facilities Components System User Guide.* 1 October 1991.
TM 5-331D. *Utilization of Engineer Construction Equipment Volume D-1 Asphalt and Concrete Equipment.* April 1969.
TM 5-337-1. *Asphalt Plant Layout 100 to 150-TPH.* 29 March 1971.
TM 5-744. *Structural Steelwork.* 10 October 1968.
TM 55-503. *Marine Salvage and Hull Repair* 13 July 1966.

Nonmilitary Publications

Covey, Stephen R. *The 7 Habits of Highly Effective People.* Simon and Schuster, 1989, Covey Leadership Center, 1-800-331-7716.

Documents Needed

These documents must be available to the intended users of this publication.

DA Form 2028. *Recommended Changes to Publications and Blank Forms.* February 1974.
DD Form 1723. *Flow Process Chart.* September 1976.

INDEX

activities list, 2-3

activity, 2-3
  estimates, 3-1
  start and finish times, 2-9

activity-on-the-arrow, 2-6

activity-on-the-node, 2-6

AFCS. *See* Army Facilities Components System (AFCS).

air compressors. *See* equipment, air compressors.

air conditioning. *See* equipment, air conditioning.

airfield,
  lighting. *See* lighting, airfield.
  snow removal. *See* snow, removal.

alarm system,
  burglar, 12-10
  fire, 12-10

aligning. *See* equipment, positioning and aligning.

anchoring. *See* equipment, supporting and anchoring.

Army Facilities Components System (AFCS), 1-3

asphalt. *See* paving operations.

assembling. *See* equipment, cleaning and assembling.

backfill, 6-1

backward pass, 2-12

balanced production, 4-11

band saw, 14-7

base preparation, 6-2

base-course preparation. *See* soil, base-course preparation.

beams. *See* concrete, beams.

bills of materials, 3-1

block. *See* concrete, block.

boilers. *See* equipment, boilers.

bolts, 5-16

brick, 10-1, 10-3

bulldozer production, 6-14

burglar alarm system. *See* alarm system, burglar.

cabinets, kitchen, 9-4

carpentry, 9-1
  doors, 9-1
  equipment. *See* equipment, carpentry.
  equipment and tool checklist, E-3
  finish, 9-1, 9-4
  flooring, 9-1
  framing, 9-3
  insulation, 9-2
  rough, 9-1
  types, 9-1
  windows, 9-1

catch basins, 8-6

ceiling joists. *See* joists, ceiling.

ceilings, 5-10

ceramic tile. *See* tile, ceramic.

chalkboard, 9-4

civic-action projects, 5-7

clamshell. *See* equipment, clamshell.

cleaning. *See* equipment, cleaning and assembling.

clearing, grubbing, and stripping. *See* soil, clearing, grubbing, and stripping.

cold-weather protection. *See* concrete, construction, cold-weather protection.

columns. *See* concrete, columns.

communications, 5-1
- oral, 5-2
- written versus oral, 5-2

compaction factors, 6-2

compressing, 2-15

compressors, air. *See* equipment, air compressors.

computer use, 2-17, B-8

concrete,
- absolute-value method, 5-15
- aggregate, 5-14
- beams, 8-5
- block, 10-1, 10-3
- book method, 5-15
- cast-in-place, 8-6
- cement, 5-14
- central mix plant layout, D-4
- columns, 8-5
- construction, 8-1
  - cold-weather protection, 8-2
  - expansion joints, 8-2
  - fine-grading process, 8-2
  - joints, 5-15
  - labor for curing concrete, 8-2
  - labor for finishing concrete, 8-2
  - labor for forms, 8-1
  - labor for mixing concrete, 8-1
  - labor for placing concrete, 8-2
  - labor for reinforced concrete, 8-1
  - painting, F-1
  - types, 8-1
  - vapor-barrier placement, 8-2
- contraction joints, 5-15
- conversion factors, 8-7
- curing, 5-15
- equipment and tool checklist, E-1
- expansion joints, 5-15
- formwork, 8-4
- handling, 5-15
- placement, 5-15
- plant layout, D-1
- reinforcing, 8-4
- slabs, 8-4
- transportation, 5-15
- trial-batch method, 5-15
- walls, 8-5
- waste factors, 8-7

construction,
- aids, 4-2
- concrete, 5-15, 8-1. *See also* concrete construction.
  - form, 5-14
  - reinforced, 5-15
- contract, 1-9
- control, 5-18
- corner post, 5-11
- directive, 1-5
- T-post, 5-12
- waterfront, 16-1
  - deck hardware, 16-2, 16-5
  - equipment selection, 16-1
  - pier framing, 16-2, 16-5
  - pile bracing, 16-1, 16-4
  - pile capping, 16-1, 16-4
  - pile driving, 16-1
  - pile extraction, 16-2, 16-5
  - sheet piling, 16-1, 16-5
  - types, 16-1

consumption factors, F-1
- brick, F-1
- caulking, F-1
- concrete, F-1
- mortar, F-1
- nails, F-1
- painting, F-1
- plaster, F-13
- putty, F-1

controlling function, 1-12, 5-1

conversion,
factors, C-3
metric factors, C-1
soil variables, 6-10

CPM. *See* critical path method (CPM).

crashing, 2-15

crews,
carpentry,
exterior painting, 9-8
finish, 9-4
flooring, 9-6
insulation, 9-4
rough framing, 9-3
sheathing, 9-3
siding, 9-3
window installation, 9-6
concrete work,
beams, 8-5
cast-in-place installations, 8-6
columns, 8-5
culverts, 8-6
footings, 8-3
foundations, 8-3
mixing, 8-3
placing, 8-3
precast installations, 8-6
slabs on grade, 8-4
structural slabs, 8-4
walls, 8-5
earth moving,
backfilling, 6-6
clearing, 6-5
cutting, 6-6
ditching, 6-7
excavation, 6-8
filling, 6-6
grubbing, 6-5
preparing subbase and base, 6-9
trenching, 6-7
underwater excavation, 6-10
electrical work,
burglar and fire alarms, 12-10
frame and trim,
housing and barracks, 12-8
industrial, 12-10
lighting,
airfield, 12-5
athletic field, 12-4
security, 12-4
street, 12-4
line work, 12-3
rough in,
housing and barracks, 12-7
industrial, 12-9
equipment installation,
air compressors and pumps, 12-4
air-conditioning, 14-3
carpentry equipment, 14-6
cleaning and assembling, 14-1
connecting, 14-2
electric motors, 14-4
exhaust fans, 14-4
expansion tanks, 14-5
fuel oil storage, 14-8
general shop equipment, 14-6
heating boilers, 14-5
hot-water storage heaters, 14-5
machine shop equipment, 14-7
metal shop equipment, 14-7
positioning and aligning, 14-1
supporting and anchoring, 14-1
unloading and moving, 14-1
warm air furnaces, 14-8
masonry,
brick, 10-3
ceramic and quarry tile, 10-3
concrete block, 10-3
lathing, 10-4
mortar-bound rubble, 10-3
plastering, 10-4
structural tile, 10-3
metal work,
fencing installation, 15-3
sheet metal work, 15-3
structural steel erection, 15-2
paving,
asphalt, 7-4
concrete, 7-3
curbs, 7-5
walks, 7-5
plumbing,
finish, 13-7
install PVC pipe, 13-9
rough in, 13-8
steel pipe, 13-4
thrust blocks, valves, and fittings, 13-4, 13-6
vitrified clay pipe, 13-7
welded steel pipe, 13-3
roofing,
asbestos-cement, 11-3

built-up, 11-2
flashing, 11-2
insulation, 11-2
metal, 11-3
roll, 11-2
shingle, 11-3
tile, 11-3
waterproof, 11-4
waterfront construction,
deck hardware, 16-6
pier framing, 16-5
pile bracing and capping, 16-4
pile driving precast concrete piles, 16-4
pile driving steel piles, 16-4
pile driving wood piles, 16-3
pile extraction, 16-2
sheet piling, 16-5
wrecking and salvaging, 17-2

critical activities, 2-12

critical path, 2-12

critical path method (CPM), 2-1

culverts, cast-in-place, 8-6

curbs and walks. *See* paving operations, curbs and walks.

cutting and filling, 6-6

decision-making process, 1-2

deck hardware installation. *See* construction, waterfront, deck hardware.

directing function, 1-11

ditching, 6-7

doors, 9-1
garage, 9-5
installation, 9-5
painting, 9-7, 9-8

dozer. *See* equipment, dozer.

drainage. *See* soil, drainage.

dredging operations, 6-1

early finish time, 2-10

early start schedule, 2-13

early start time, 2-10

earth-moving operations, 6-1

earthwork. *See* soil, earthwork.

efficiency factor, 3-2

electric motors. *See* equipment, electric motors.

electrical,
airfield lighting, 12-4
alarm system, 12-10
athletic field lighting, 12-4
interior,
rough in, 12-1, 12-7, 12-9
finish and trim, 12-1, 12-8, 12-10
line work, 12-1
outdoor lighting, 12-1
street lighting, 12-4
substation equipment, 12-2
transformers, 12-2
underground power system, 12-1, 12-6

equipment, 6-1
air compressors, 14-2
air-conditioning, 14-3
boilers, 14-5
carpentry, 14-6
checklist. *See* equipment and tool checklist
clamshell, 6-6, 6-8, 6-10, 6-11
cleaning and assembling, 14-1
connecting, 14-2
dozer, 6-5, 6-6, 6-8
electric motors, 14-4
exhaust fans, 14-4
expansion tanks, 14-5
furnace, warm air, 14-8
general shop, 14-6
grader, 6-7
heating boilers. *See* equipment, boilers.
hot-water storage heaters, 14-5
installation, 14-1
machine, 14-7
metal shop, 14-7
positioning and aligning, 14-1
pumps, 14-2
scoop loader, 6-6, 6-8, 6-10

scraper, 6-6, 6-8
sheepsfoot roller, 6-6, 6-7, 6-8, 6-9
supporting and anchoring, 14-1
types, 14-1
unloading, 14-1

equipment and tool checklist, E-1
carpentry, E-3
concrete work, E-1
earth work, E-4
interior wiring, E-5
masonry, E-1
overhead electrical lines, E-4
paint, E-2
pavement work, E-4
plaster, E-2
reinforcing bars, E-2
shop, E-3
soil pipe and interior plumbing, E-5
welding, E-3

estimates,
equipment, 3-2
materials, 3-1
personnel, 3-2
work sheet, 3-3

estimating activity durations, 3-1

estimating process, 3-1

excavation, 6-1
general. *See* general excavation factors.
trench. *See* trench excavation factors.
underwater, 6-10

execution, 1-14

exhaust fans. *See* equipment, exhaust fans.

expansion,
joints. *See* concrete, construction, expansion joints.
tanks. *See* equipment, expansion tanks.

expediting, 2-15

expendable supplies, F-1

fan, exhaust. *See* equipment, exhaust fans.

fencing installation, 15-1, 15-3
metal, 15-3
wood, 15-3

fine-grading process. *See* concrete, construction, fine-grading process.

fire alarm system. *See* alarm system, fire.

fire hydrants, 13-1

flashing. *See* roofing, flashing.

floors, 5-14, 9-1, 9-6
bridging, 5-10
joists, 5-10

flow diagram, 4-5

flow process chart, 4-7, 4-21

footings and foundations, 8-3

forward pass, 2-10

foundations, 5-9. *See also* footings and foundations.

framing,
pier, 16-5
rough, 9-3

free float, 2-13

front-end-loader production, 6-14

fuel oil storage, 14-8

furnace. *See* equipment, furnace, warm air.

Gantt chart method, 2-1

garbage disposal, 13-7

general excavation factors, 6-13

general shop equipment, 14-6

grader. *See* equipment, grader.

graphic aids, 6-2

health and welfare, 5-5

heater,
dryer, 12-8
hot-water storage, 14-5
space, 12-8

indigenous personnel, 5-7
supervision of, 5-7

inspections,
announced, 5-3
checklist, 5-4
delegation of authority, 5-3
unannounced, 5-3

inspections and reports, 5-3

insulation, 9-2, 9-4. *See also* roofing, insulation.

interfering float, 2-13

interior wiring, equipment and tool checklist, E-5. *See also* electrical, interior.

joists,
ceiling, 9-8
floor, 9-8
wood, 9-9

labor, 5-7
for curing concrete, 8-2
for finishing concrete, 8-2
for forming, 8-1
for mixing concrete, 8-1
for placing concrete, 8-2
for reinforced concrete, 8-1
local, 5-7
US, 5-7

lag factor, 2-17

late finish time, 2-10

late start time, 2-12

lath, 10-1, 10-4

lathe, 14-6, 14-7

layout. *See* soil, layout.

leadership, 1-12

life expectancy. *See* necessities and life expectancy.

lighting. *See also* electrical.
airfield, 12-4
athletic field, 12-4
fluorescent fixtures, 12-8
incandescent fixtures, 12-8
receptacles and switches, 12-8
security, 12-4
street, 12-4

logic diagram, 2-5

lumber,
calculations, 3-3
ceilings, 5-10
exterior, 5-14
fasteners, 5-8
floor bridging, 5-10
floor joists, 5-10
floors, 5-14
foundations, 5-9
framing, 5-9
joints, 5-8
openings, 5-12
plumbing posts, 5-12
rafters, 5-10
splices, 5-8
steps and stairs, 5-12
walls, 5-10

maintenance, 5-5

management, 1-1

managerial functions, 1-5

masonry, 5-16, 10-1
conversion units, 10-5
equipment and tool checklist, E-1
types, 10-1

material weights, 6-11

metal work,
sheet, 15-1, 15-3
shop. *See* equipment, metal shop.
structural steel, 15-1, 15-2
types, 15-1

methods engineering, 4-4

metric conversion factors. *See* conversion, metric factors.

milestones, 2-6

mixing and placing, 8-3

molding, 9-4

mortar-bound rubble, 10-1, 10-3

multiple-resource schedule, 2-15

necessities and life expectancy, 1-2

node, 2-6
  numbering, 2-8
  start and finish, 2-6

nomograph, 6-2

organization structure, 1-11

organizing function, 1-11

painting,
  equipment and tool checklist, E-2
  exterior, 9-8
  interior, 9-7

paving operations, 7-1
  asphalt, 7-1, 7-4
    kettle, 7-5
  concrete, 7-1, 7-3
  curbs and walks, 7-2, 7-5
  equipment, 7-1
  equipment and tool checklist, E-4
  types, 7-1

phase construction, 1-3

PIB. *See* proceeded immediately by (PIB).

pier framing. *See* construction, waterfront, pier framing.

pile bracing. *See* construction, waterfront, pile bracing.

pile capping. *See* construction, waterfront, pile capping.

pile driving. *See also* construction, waterfront, pile driving.
  precast concrete bearing piles, 16-4
  steel-bearing piles, 16-4
  wood-bearing piles, 16-4

pile extraction. *See* construction, waterfront, pile extraction.

pins, 5-17

pipe,
  bending, 5-18
  cutting, 5-17
  joining, 5-18
  polyvinyl chloride, 13-9, 13-10
  threaded, 14-6
  vitrified clay, 13-7

pipeline,
  pipe-welded, 13-3
  steel, 13-3, 13-4, 13-5

planer, 14-6, 14-7

planning function, 1-5
  detailed planning, 1-5, 2-3
  preliminary planning, 1-5, 2-3

plant layout, D-1, D-3, D-4
  asphaltic concrete, D-4
  portland cement concrete, D-5
  rock-crushing, D-3
  screening, D-3

plant location, D-6

plant operation,
  asphalt, D-6
  rock-crushing, D-6

plaster, 10-1, 10-4
  equipment and tool checklist, E-2

plow, snow, 17-2

plumbing, 13-1
  finish, 13-2
  pipe, 13-1
  rough in, 13-1, 13-8
  types, 13-1
  valves and fittings, 13-1
  vents, 13-1

plumbing materials, 5-17
  asbestos cement, 5-17
  bending, 5-18
  bituminized fiber, 5-17
  cast iron, 5-17

copper tubing, 5-17
cutting, 5-17
iron and steel, 5-17
joining, 5-18

positioning. *See* equipment, positioning and aligning.

post indicator valves, 13-1

precedence arrow, 2-6

precedence diagramming, 2-6

prefabrication, 4-2
component interchangeability, 4-2
factory assembly, 4-2
labor saving, 4-2

proceeded immediately by (PIB), 2-5

production,
bulldozer. *See* bulldozer production.
front-end-loader. *See* front-end-loader production.
rate analysis, 4-11, 4-17

project,
civic action, 5-7
size, 4-2

proportioning, 4-11

pumps. *See* equipment, pumps.

PVC. *See* pipe, polyvinyl chloride.

quality control, 5-8

quarry,
layout, D-2
tile. *See* tile, quarry.

rafters, 5-10

redefined logic, 2-17

reporting system, 5-6

reports, 5-6
budget, 5-6
types, 5-6

required facilities, 4-1

resources,
constraining, B-1
dummy arrow, B-4
flow arrows, B-2
mothballed, B-2

rivets, 5-17

roofing, 11-1
asbestos-cement, 11-3
built-up, 11-1
flashing, 11-1
insulation, 11-1
metal, 11-3
roll, 11-1
shingle, 11-3
tile, 11-3
types, 11-1

rubble, 10-1, 10-3

rubblestone, 5-16

salvage, 17-1, 17-2

scoop loader. *See* equipment, scoop loader.

scraper. *See* equipment, scraper.

shaper, 14-6, 14-7

shear, 14-7

sheathing, 9-3

sheepsfoot roller. *See* equipment, sheepsfoot roller.

sheet piling. *See* construction, waterfront, sheet piling.

shelving, 9-4

shingle. *See* roofing, shingle.

shop equipment, E-4

siding, 9-3

simplicity, 1-2

site,
layout, 4-1
preparation, 6-1

slabs,
on grade, 8-4
structural, 8-4

snow,
plow, 17-2
removal, 17-1, 17-2

soil, 5-18
base-course preparation, 5-19
classification, 5-18
clearing, grubbing, and stripping, 5-18
construction control. *See* construction, control.
conversion variables, 6-10
drainage, 5-18
earthwork, 5-19
layout, 5-18
subgrade preparation, 5-19
wearing-surface preparation, 5-19

space heater, 12-8

staffing function, 1-11

standard effort, 3-2

standardization, 1-2

steel, 5-16, 15-1. *See* also metal work, structural steel.

steps and stairs, 5-12

structural tile. *See* tile, structural.

studs, 9-8

stump removal, 6-5

subbase preparation, 6-2

subgrade preparation. *See* soil, subgrade preparation.

substation equipment. *See* electrical, substation equipment.

supervision, 5-1

supplies, consumption factors, F-1

supporting. *See* equipment, supporting and anchoring.

sweeper, 7-4

swell factors, 6-11

swing angle conversion, 6-11

systems,
analysis, 4-3
management, 2-1

TCMS. *See* Theater Construction Management System (TCMS).

Theater Construction Management System (TCMS), 2-17

theater of operations (TO), 1-1

thrust blocks, 13-1

tile,
ceramic, 10-1, 10-3
floor, 9-1
quarry, 10-1, 10-3
roof, 11-1, 11-3
structural, 10-1, 10-3

time-motion studies, 4-4

TO. *See* theater of operations (TO).

tools. *See* equipment and tool checklist.

topography, 4-1

total float, 2-13

towers, transmission, 15-2

transformers. *See* electrical, transformers.

tree removal, 6-5

trench excavation factors, 6-12

trenching, 6-7

troop effort, 3-2

trusses, 9-3

underground power system. *See* electrical, underground power system.

US labor and equipment, 5-7

vapor-barrier placement. *See* concrete, construction, vapor-barrier placement.

venetian blinds, 9-6

walls, 5-10
- board, 9-4
- brick, 10-4
- concrete, 8-5
- exterior stucco, 10-4
- frames, 9-3
- insulation, 9-4
- lathing, 10-4
- plasterboard, 9-4
- plastering, 10-4
- plywood, 9-4
- tile, 10-3

waste factors, C-2

waterfront. *See* construction, waterfront and work-element checklist, waterfront construction.

waterproofing, 11-4

wearing-surface preparation. *See* soil, wearing-surface preparation.

weather stripping, 9-6

welding equipment, E-4

welds, 5-17

windows, 9-1, 9-8
- installation, 9-6

work-element checklist, A-1
- building, A-1
- outside utilities, A-2
- plant operations, A-2
- roads, paving, and walks, A-3
- waterfront construction, A-3

work rate, 3-2

wrecking, 17-1, 17-2

written communications,
- advantages, 5-2
- disadvantages, 5-2

FM 5-412
13 JUNE 1994

By Order of the Secretary of the Army

GORDON R. SULLIVAN
General, United States Army
Chief of Staff

Official:

MILTON H. HAMILTON
Administrative Assistant to the
Secretary of the Army
06568

DISTRIBUTION:
Active Army, USAR, and *ARNG:* To be published in accordance with DA Form 12-11-E, requirements for FM 5-412, *Project Management* (Qty rqr block no. 0015).

★ U. S. G. P. 0.:1994-528-C127:80134