FM 5-134

PILE CONSTRUCTION

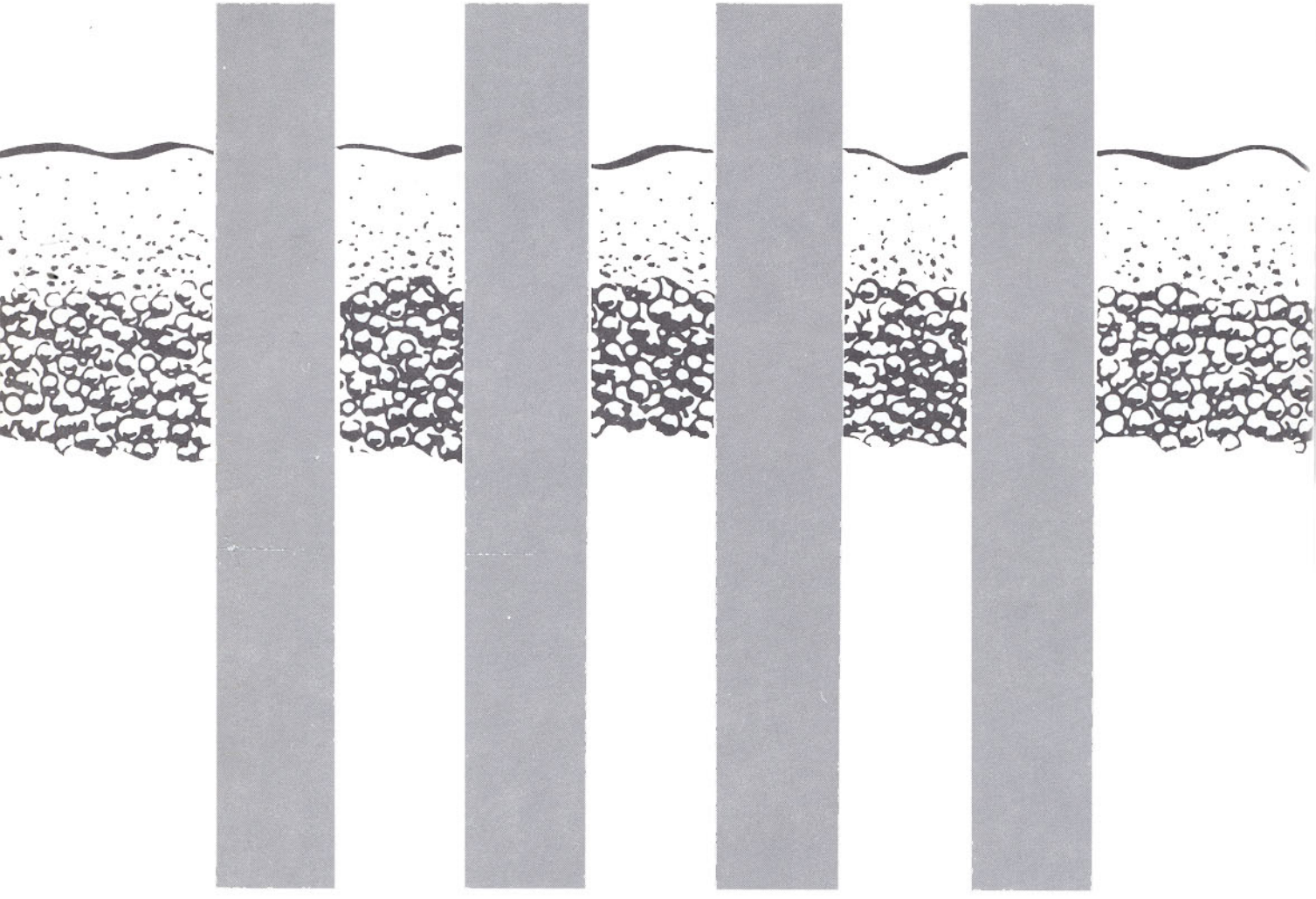

HEADQUARTERS, DEPARTMENT OF THE ARMY

DISTRIBUTION RESTRICTION. This publication contains technical or operational information that is for official Government use only. Distribution is limited to US Government agencies. Requests from outside the US Government for release of this publication under the Freedom of Information Act or the Foreign Military Sales Program must be made to HQ TRADOC, Fort Monroe, VA 23651.

Field Manual No. 5-134

*FM 5-134

Headquarters, Department of the Army
Washington, DC, 18 April 1985

PILE

CONSTRUCTION

*This field manual supersedes TM 5-258, 18 June 1963.

Preface

P-1. Purpose and scope. This manual is organized to be used as a field reference. Chapter 1 through 4 discuss piles, equipment, and installation. Information concerning design (less that of sheet piling structures) is provided in chapters 5 through 7 for use when tactical and logistical situations dictate original design. These chapters are of primary interest to engineer staff officers planning pile construction when the standard installations, facilities, equipment and supplies of the Army Facilities Component System (AFCS) are not used. The appendix presents information on piling materials not currently available through military supply. The glossary contains terms frequently used in pile design and construction, acronyms, and abbreviations used in this manual.

P-2. User information. The proponent agency of this publication is the US Army Engineer School. Submit changes for improving this publication on DA Form 2028 (Recommended Changes to Publications and Blank Forms) and forward to US Army Engineer School, ATTN: ATZA-TD-P, Fort Belvoir, Virginia 22080-5291.

CAUTION

The Engineer News Formula should be used only when designing piles with a bearing capacity of 50 kips (50,000 pounds) or less.

Table of Contents

PREFACE iii

CHAPTER 1. BASIC CONSIDERATIONS

Section I. Definitions and Classifications 1-1

II. Pile Selection 1-4

CHAPTER 2. MATERIALS

Section I. Selection of Materials 2-1

II. Timber Piles 2-1

III. Steel Piles 2-5

IV. Precast Concrete Piles 2-7

V. Cast-in-Place Piles 2-12

VI. Sheet Piles 2-13

CHAPTER 3. PILE-DRIVING EQUIPMENT

Section I. Standard Pile-Driving Equipment 3-1

II. Expedient and Floating Pile-Driving Equipment 3-15

III. Other Pile-Driving Equipment 3-22

CHAPTER 4. PILE INSTALLATION OPERATIONS

Section I. Preparation of Piles for Driving 4-1

II. Construction Procedures 4-8

III. Preparation and Use of Piles 4-32

IV. Supervision 4-34

CHAPTER 5. ALLOWABLE LOADS ON A SINGLE PILE

Section I. Basics 5-1

II. Structural Designs 5-2

III. Dynamic Formulas 5-4

IV. Static Formulas 5-6

V. Pile Load Tests 5-9

DISTRIBUTION RESTRICTION: Approved for public release; distribution is unlimited.

CHAPTER 6. PILE FOUNDATIONS
Section I. Group Behavior 6-1
II. Ground Conditions 6-2
III. Design Examples 6-11
CHAPTER 7. DISTRIBUTION OF LOADS ON PILE GROUPS
Section I. Design Loads 7-1
II. Vertical Pile Groups 7-1
III. Vertical and Batter Pile Groups 7-6
CHAPTER 8. MAINTENANCE AND REHABILITATION
Section I. Timber Piles 8-1
II. Steel Piles 8-6
III. Concrete Piles 8-8
IV. Rehabilitation 8-8
APPENDIX WOODS USED AS PILES A-1
EFERENCES References-1
GLOSSARY
Section I. Definitions Glossary-1
II. Acronyms, Abbreviations, and Symbols Glossary-6
INDEX Index-1

List of Illustrations

Figure 1-1	Pile foundation for structure support	1-2
1-2	Sheet pile protecting a bridge pier	1-2
1-3	Piles in a waterfront structure	1-3
1-4	Friction piles	1-3
1-5	End-bearing piles	1-4
1-6	Batter piles	1-4
1-7	Compaction piles	1-5
2-1	Typical timber bearing pile	2-3
2-2	Steel rails welded to form piles	2-6
2-3	Designs of precast concrete piles	2-8
2-4	Layout of small casting yard	2-9
2-5	Wooden forms for casting concrete piles	2-9
2-6	Handling precast concrete piles	2-10
2-7	Precast concrete pile design charts	2-11
2-8	Blocking of stacked concrete piles	2-12
2-9	Cross-sectional views of steel sheet piling	2-15
2-10	Types of timber sheet piles	2-16
2-11	Rail and plank sheet piling	2-17
2-12	Designs of concrete sheet piles	2-18/1
3-1	Crane with standard pile-driving attachments	3-2
3-2	Pile driver lead adapter	3-3
3-3	Steel-frame, skid-mounted pile driver	3-4
3-4	Aligning leads of the skid-mounted pile driver	3-5
3-5	Drop hammer and pile cap placed in leads	3-7
3-6	Details of expedient log hammer	3-8
3-7	Pneumatic or steam pile-driving hammers	3-9
3-8	Types of pile hammers	3-11
3-9	Special cap (helmet) for steel pile	3-12
3-10	Pile-driving leads with bottom brace	3-13
3-11	Bottom braces for adjusting batter	3-14
3-12	Expedient wood-frame, skid-mounted pile driver	3-15
3-13	Expedient wood-frame, skid-mounted pile driver using standard leads	3-16
3-14	Expedient timber pile-driving rig using dimensioned lumber	3-17
3-15	Expedient tripod pile driver	3-18
3-16	Design features of the tripod pile driver	3-19
3-17	Expedient pile driver made of constructed welded steel angles	3-20
3-18	Crane-shovel with pile-driving attachment	3-21

Figure 3-19	Skid-mounted pile driver on a 5-foot × 12-foot barge assembly	3-22
3-20	Jet pipe assembly	3-23
3-21	Improvised devices for aligning hammers without leads	3-25
4-1	Steel shoes for timber piles	4-2
4-2	Methods of splicing timber piles	4-3
4-3	Driving points for H-piles	4-4
4-4	Driving points for pipe piles	4-5
4-5	Butt-welded splice, welding clamps, and guide for scarfing	4-6
4-6	Splices of H-piles and pipe piles	4-7
4-7	Basic steps in setting and driving piles	4-9
4-8	Types of damage to timber piles from overdriving	4-11
4-9	Method of guying steel piles	4-12
4-10	Batter of a pile	4-14
4-11	Use of block and tackle to realign pile	4-15
4-12	Breaching obstructions	4-17
4-13	Jetting pile by pipes and hoses	4-18
4-14	Use of jet pipes near pile tip	4-19
4-15	Precast concrete piles with internal jetting pipes	4-20
4-16	Realigning piles by jetting	4-21
4-17	Wire rope guideline to position piles	4-23
4-18	Floating template for positioning piles	4-24
4-19	Aligning frame for pile bent	4-26
4-20	Aligning and capping steel pile bents	4-27
4-21	Approximate shape of thawed hole in sand-silt soil after 1½ hours of steam jetting	4-28
4-22	Piles driven through 3 feet of active zone to a depth of 13 feet after thawing	4-29
4-23	Cutting timber pile bent to final height	4-31
4-24	Procedure for placing cast-in-ground concrete piles	4-33
4-25	Procedure for placing shell-type, cast-in-place concrete piles	4-35
4-26	Hand signals for pile-driving operations	4-37
5-1	Unsupported length	5-3
5-2	Measurement of pile set in field	5-5
5-3	Static analysis of piles in cohesive soils	5-7
5-4	Static analysis of piles in cohensionless soils	5-8
5-5	Typical pile load test setup	5-9
5-6	Typical load-deflection curve	5-10
5-7	Interpretation of CRP test results	5-11
5-8	Effects of group action on size of stressed zone	5-12
5-9	Distinction between rigid and flexible pile or pier	5-13
5-10	Ultimate lateral resistance of rigid piles in clay	5-14
5-11	Ultimate lateral resistance of rigid piles in sand	5-15

6-1 Estimated settlement of pile groups in sand 6-4
6-2 Uplift capacity of pile group 6-4
6-3 Block failure of piles in clay 6-5
6-4 Approximate distribution of stress beneath pile foundations 6-6
6-5 Pile action on the soil 6-7
6-6 Analysis of drag on piles in clay 6-9
6-7 Forces acting on and supporting capacity of piling in permafrost 6-10
6-8 Design of pile foundation in dense sand underlain by clay 6-13
6-9 Design of friction pile foundation in a deep deposit of clay 6-16
7-1 Pile group with resultant passing through center of gravity 7-2
7-2 Pile group with resultant not at center of gravity 7-3
7-3 Pile bent 7-5
7-4 Pile reaction in a pile group composed of batter and vertical piles 7-8
7-5 Relationship of pile load components 7-9
7-6 Force polygon 7-10
8-1 Decay of untreated timber pile 8-2
8-2 Marine borer damage to timber pile 8-3
8-3 Brush application of preservative to cutoff ends 8-4
8-4 Typical concrete encasements of steel piles 8-7
8-5 Timber splicing using reinforced concrete 8-10

List of Tables

1-1 Types of bearing piles 1-6
2-1 Classification of timber piles 2-2
2-2 Working stresses for timber 2-4
2-3 Properties of steel sheet piling 2-14
3-1 Selection of diesel hammers for various sizes of piling 3-6
3-2 Properties of selected impact pile hammers 3-10
4-1 Treatment of field problems encountered during pile driving 4-13
5-1 Strength or consistency of undisturbed clays 5-16
7-1 Tabular form for determining load acting on each pile 7-6

CHAPTER 1
BASIC CONSIDERATIONS

Section I. DEFINITIONS AND CLASSIFICATIONS

1-1. Definitions.

a. Piles. A pile is a long, columnar element made of timber, steel, concrete, or a combination of these materials (discussed in chapter 2). Piles transmit foundation loads to deeper strata that sustain the loads safely and prevent settling of the supported structure. Piles derive their support from a combination of skin friction along the embedded lengths and end bearing at the tips or bottoms (figure l-l).

b. Piers. A pier is a pile used to support a horizontal supporting span such as a bridge or archway.

c. Sheet piles. Sheet piles are generally prefabricated or precast members driven vertically into the ground to form a continuous vertical wall. Sheet piles protect bearing piles against scour and the danger of undermining a pier foundation (figure 1-2). They form retaining walls (bulkheads) for waterfront structures (figure 1-3).

d. Friction/end-bearing piles. A pile embedded in soil with no pronounced bearing stratum at the tip is a friction pile (figure 1-4). A pile driven through relatively weak or compressible soils into rock or an underlying stronger material is an end-bearing pile (figure 1-5).

e. Batter piles. Piles driven at an angle are batter piles. They are used to resist heavy lateral or inclined loads or where the foundation material immediately beneath the structure offers little or no resistance to the lateral movement of vertical piles. Batters are driven into a compressible soil to spread vertical loads over a larger area, thereby reducing settlement. They may be used alone (battered in opposite directions) or in combination with vertical piles (figure 1-6). Batter piles can be driven at slopes of 4 degrees to 12 degrees with ordinary driving equipment.

f. Compaction piles. Compaction piles are driven to increase the density of loose, cohesionless soils (figure 1-7) and to reduce settlement, since shallow foundations on very loose deposits of sand or gravel may settle excessively. Piles with a heavy taper are

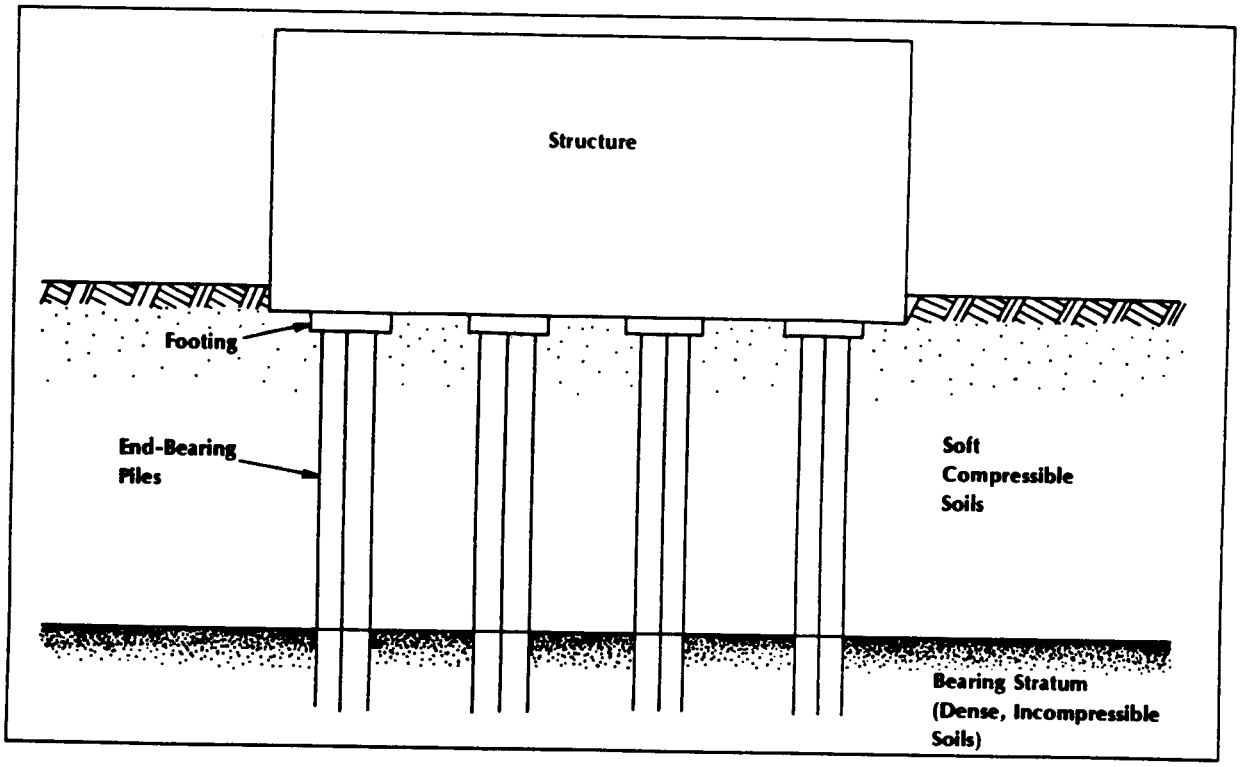

Figure 1-1 Pile foundation for structure support

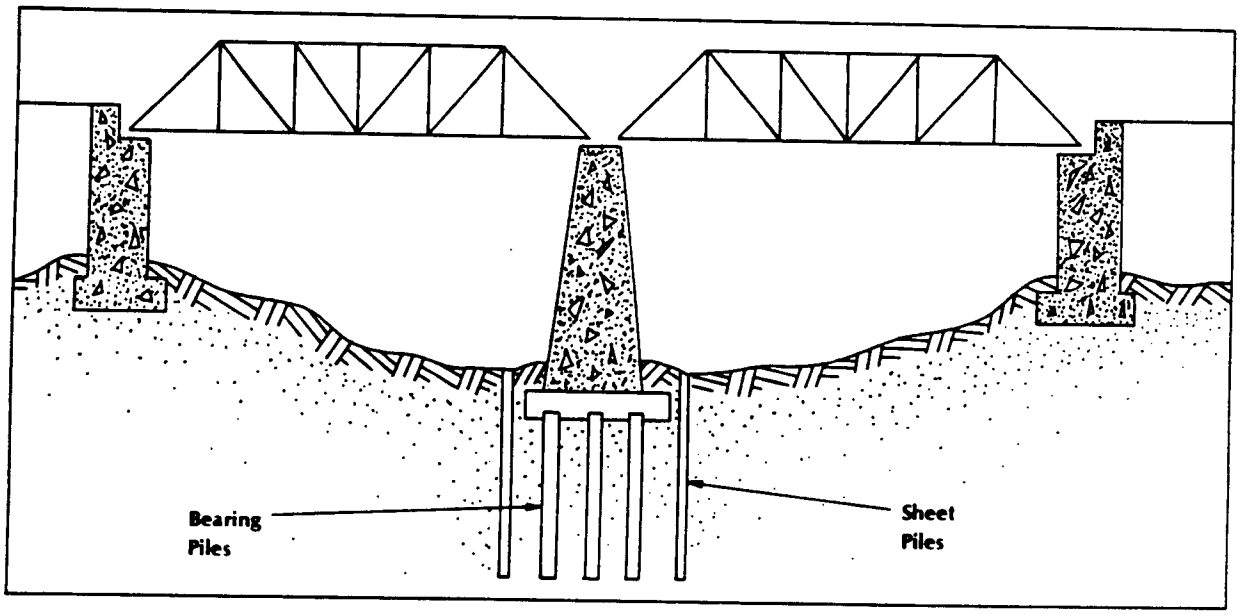

Figure 1-2 Sheet pile protecting a bridge pier

most effective and economical. These piles derive their support primarily from friction.

g. Anchor piles. Anchor piles are driven to resist tension loads. In hydraulic structures, there may be a hydrostatic uplift load that is greater than the downward load on the structure. Anchor piles may be used to anchor bulkheads, retaining walls, and guy wires (figure 1-3).

h. Fender piles. Fender piles are driven to protect piers, docks, and bridges from the wear and shock of approaching ships and floating objects such as ice and debris (figure 1-3).

i. Dolphins. A dolphin is a group of piles driven in clusters to aid in maneuvering ships in docking operations. These dolphins serve the same protective functions as fender piles (figure 1-3).

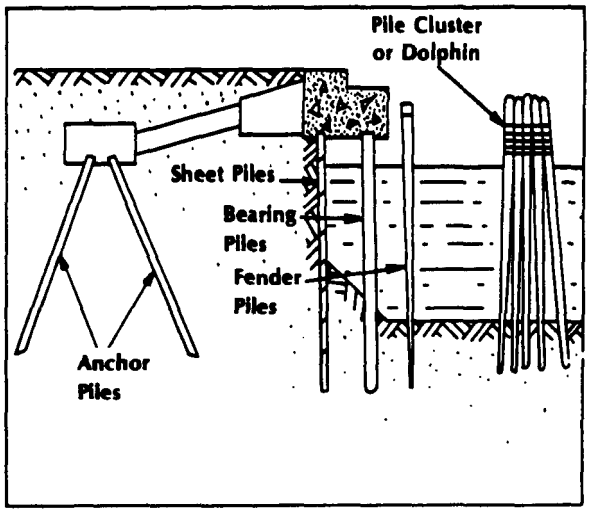

Figure 1-3 Piles in a waterfront structure

1-2. Pile functions.

Several uses of piles are illustrated in figures 1-1 through 1-7. A pile or series of piles are used to constructor reinforce construction to

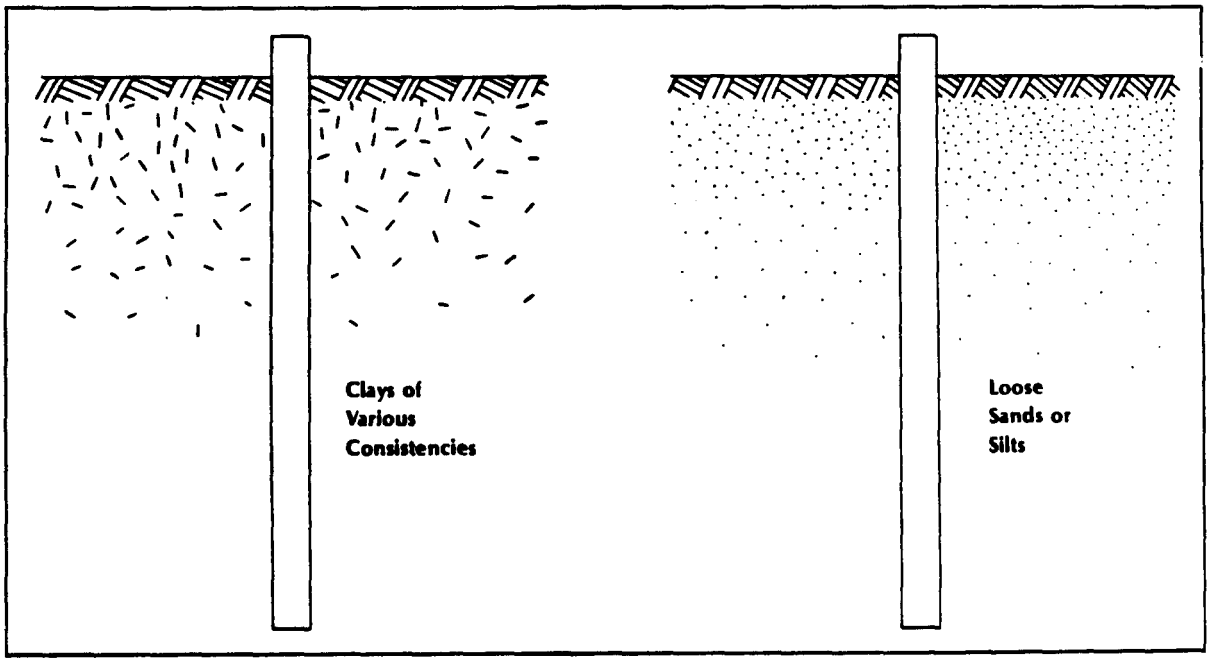

Figure 1-4 Friction piles

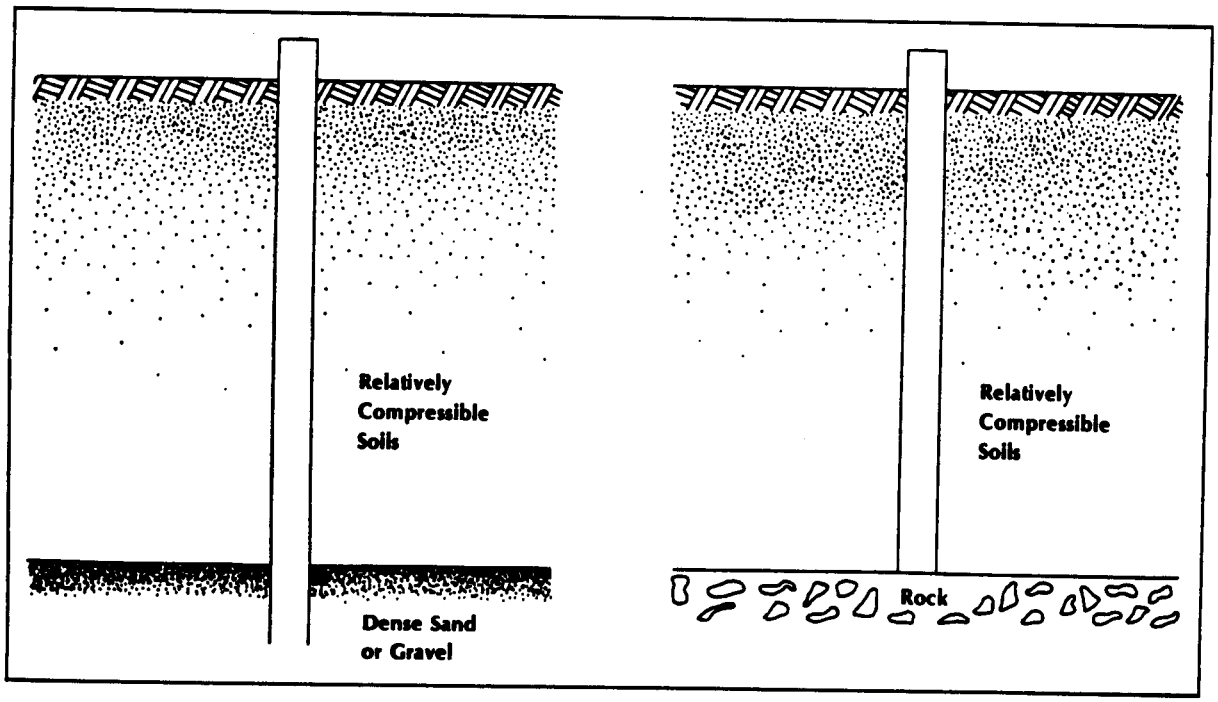

Figure 1-5 End-bearing piles

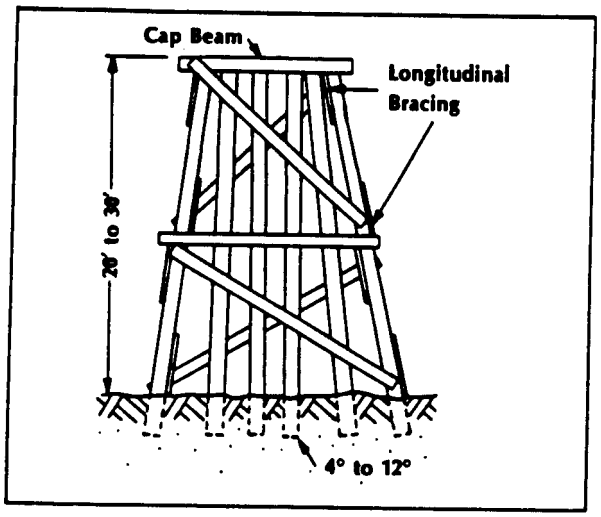

Figure 1-6 Batter piles

establish a stable foundation. Piles are used as follows.

- To transfer the structural load through material or strata of poor bearing capacity to one of adequate bearing capacity.
- To eliminate objectionable settlement.
- To resist lateral loads.
- To serve as fenders to absorb wear and shock.
- To improve load-bearing capacity of soil and reduce potential settlement.
- To transfer loads from overwater structures below the depth of scour.
- To anchor structures subjected to hydrostatic uplift, soil expansion, or overturning.

Section II. PILE SELECTION

1-3. Factors.

Many factors influence the choice of pile types used on a given project. Consideration must be given to the following factors (and others, if applicable).

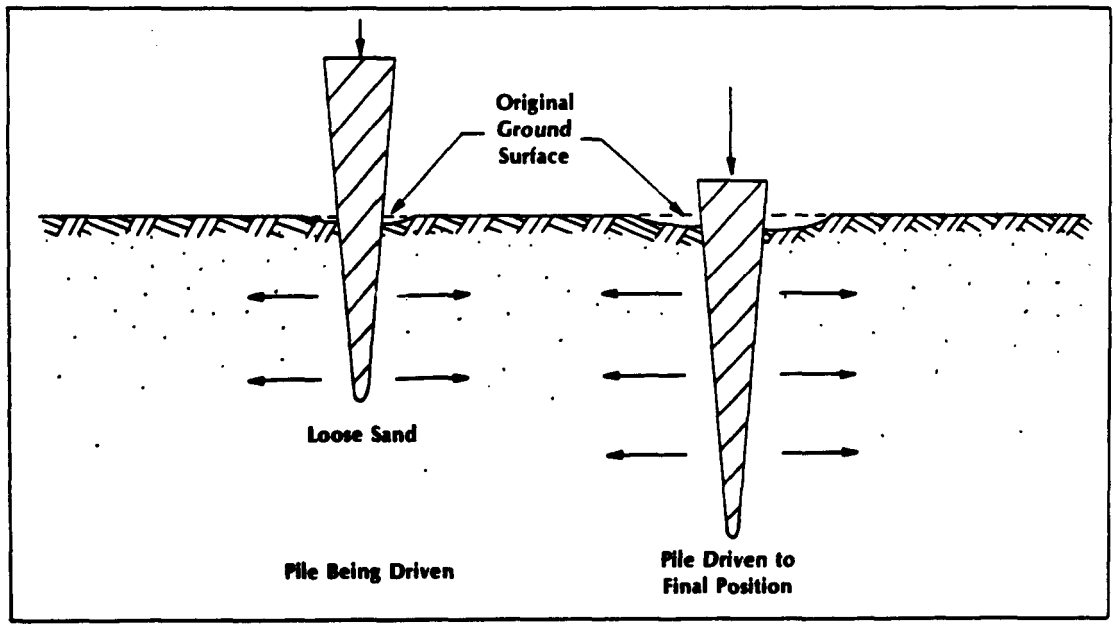

Figure 1-7 Compaction piles

- Type of construction.
- Availability of pile types and sizes.
- Soil and groundwater conditions at the site.
- Anticipated pile loads.
- Driving chacteristics of available piles.
- Capabilities of crew and equipment available for handling and driving piles.
- Time available for construction.
- Design life of structure.
- Exposure conditions.
- Accessibility of site and transportation facilities.
- Comparative costs.

14. Construction consideration.

a. Material selection. Piles are made from timber, steel, or concrete. Composite piles, formed of one material in the lower section and another in the upper, are not commonly used in military construction because of the difficulty in forming a suitable joint and the greater complexity of installation.

b. Deliberate construction. Critical structures such as wharves, piers, and bridges on main routes of communication must be well constructed. Deliberate structures warrant high safety factors. These structures require thorough soil investigation and site examination to obtain the information for proper planning and design. This information is essential for safety, economy, and practicality.

c. Hasty construction. In military construction, many pile structures are built hastily after limited reconnaissance. Hasty

TABLE 1-1. TYPES OF BEARING PILES

Large Displacement	Small Displacement	Nondisplacement
1. Formed at Site Closed end tubular section driven to form a void filled with concrete while withdrawing the section	1. Steel H-Piles	1. Supported a. Permanent (By casing) b. Temporary (1) By casing (2) Boring mud or clay
2. Preformed - Driven in ground and left in position a. Solid (1) Timber (2) Precast Concrete (3) Composite b. Hollow (1) Closed end steel, filled or unfilled after driving (2) Closed end concrete	2. Open End Pipe (May plug during driving) 3. Anchor (Screw) 4. Preformed (Driven in prebored hole)	2. Unsupported

pile structures are designed with the lowest factors of safety consistent with their importance. In hasty construction readily available materials will be used to construct pile foundations capable of supporting the structure at maximum load for immediate needs. They can be strengthened or rebuilt later.

1-5. Types and sizes.

Piles are classified by use, installation, material, and type of displacement. Classification of piles based on installation technique is given in table 1-1.

a. Large displacement. Large displacement piles include all solid piles such as timber and precast concrete piles. These piles may be formed at the site or preformed. Steel piles and hollow concrete piles, driven closed-ended, also fall within this group.

b. Small displacement. Small displacement piles include steel H-piles, steel pipe piles (if the ground enters freely during driving), screw or anchor piles, and preformed piles driven in prebored holes.

c. Nondisplacement. Nondisplacement piles are formed by boring or other methods of excavation. The borehole may be lined with a casing that is either left in place or extracted as the hole is filled with concrete.

1-6. Soil and groundwater.

Soil and groundwater conditions determiue the design and construction of pile foundations. Foundations are successful only if the soil strata, to which the structural loads are transmitted, can support the loads without failure or excessive settlement. Except for end-bearing piles founded on rock, piles depend upon the surrounding soil or that beneath the pile tips for support. Groundwater conditions often dictate the type of piles that must be used and influence the load-carrying capacity of piles. Adequate soil exploration, testing, and analysis are prerequisites to the successful design and construction of all except crude, hasty pile structures. The relation of soil conditions to pile driving and the design of pile foundations are discussed in chapters 5 and 6.

1-7. Comparative costs.

Comparative costs of piling materials are computed on the dollar cost per ton of bearing capacity for the entire foundation. Comparing piling materials on the basis of cost per linear foot is misleading since the costs of shipping and handling, the job conditions affecting driving techniques, and the relative load-bearing capacities all affect the overall cost.

CHAPTER 2
MATERIALS

Section I. SELECTION OF MATERIALS

2-1. Considerations.

The varied factors to be considered in selecting piles is covered in chapter 1, section II Chapter 2 discusses selection of piles based on the type of construction and the availability and physical properties of the materials.

a. Hasty construction. In hasty construction, full use is made of any readily available materials for pile foundations capable of supporting the superstructure and maximum load during a short term. The tactical situation, available time, and economy of construction effort dictate construction.

b. Deliberate construction. In a theater of operations, timber piles are normally available in lengths of 30 to 70 feet. They are also relatively easy to transport and manipulate. Steel piling is next in importance, especially where deliberate construction is planned to accommodate heavy loads or where the foundation is expected to be used for a long time. Small displacement steel H-piles are particularly suited to penetrating deep layers of course gravel, boulders, or soft rock such as coral. Such piles also reduce heave of adjacent structures.

2-2. Army Facilities Components System (AFCS) materials.

Complete bills of materials for facilities and installations of the AFCS are in TM 5-303. These detailed listings, identified by facility number and description, provide stock number, nomenclature, unit, and quantity required. For additional information concerning AFCS installations involving pile foundations, consult TM 5-301 and TM 5-302.

Section II. TIMBER PILES

2-3. Classification.

The American Society for Testing and Materials (ASTM) classifies timber piles according to their intended use (table 2-l). Class A and class B piles are identical in quality, but differ in size. Class C piles (not listed) normally are not treated with preservatives. Timber piles are further classified in terms of marine and nonmarine use.

TABLE 2-1. CLASSIFICATION OF TIMBER PILES

Length, feet	Class A						Class B[1]					
	3 Feet from Butt				At Tip, Minimum		3 Feet from Butt				At Tip, Minimum	
	Minimum		Maximum				Minimum		Maximum			
	Circumference, inches	Diameter (approx) inches	Circumference, inches	Diameter (approx) inches	Circumference, inches	Diameter (approx) inches	Circumference, inches	Diameter (approx) inches	Circumference, inches	Diameter (approx) inches	Circumference, inches	Diameter (approx) inches
Douglas, Fir, Hemlock, Larch, Pine, Spruce												
Under 40	44	14	57	18	28	9	38	12	63	20	25	8
40 to 54	44	14	57	18	28	9	38	12	63	20	22	7
55 to 74	44	14	57	18	25	8	41	13	63	20	22	7
75 to 90	44	14	63	20	22	7	41	13	63	20	19	6
Over 90	44	14	63	20	19	6	41	13	63	20	16	5
Oak and other hardwoods, Cypress												
Under 30	44	14	57	18	28	9	38	12	57	18	25	8
30 to 40	44	14	57	18	28	9	41	13	63	20	22	7
Over 40	44	14	57	18	25	8	41	13	63	20	19	6
Cedar												
Under 30	44	14	69	22	28	9	38	12	69	22	25	8
30 to 40	44	14	69	22	28	9	41	13	69	22	25	8
Over 40	44	14	69	22	25	8	41	13	69	22	22	7

[1] In Class B piles, a minimum circumference of 34 inches or diameter of 11 inches at a point 3 feet from the butt may be specified for lengths of 25 feet and under.

From ASTM Book of Standards, 1958 Supplement

Class A piles are suitable for use in extra-heavy framed construction. The minimum diameter of butt permits the use of load-bearing timber caps 14 inches in width

Class B piles are most commonly used for docks, wharves, bridges, or foundations, and general construction. The minimum diameter of butt permits the use of load-bearing timber caps 12 inches in width.

Class C piles are suitable for use in marinas and other light construction.

a. Marine use.

(1) *Type I.* Type I piles, pressure treated with waterborne preservatives and creosote (dual treatment), are suitable for use in marine waters of extreme borer hazard.

(2) *Type II.* Type II piles, pressure treated with creosote, are suitable for use in marine waters of severe borer hazard.

(3) *Type III.* Type III piles, pressure treated with creosote, are suitable for use in marine waters of moderate borer hazard.

b. Nonmarine use.

(1) *Type I.* Type I piles are untreated.

(2) *Type II.* Type II piles are treated.

2-4. Characteristics.

A good timber pile has the following characteristics.

- Free of sharp bends, large or loose knots, shakes, splits, and decay.
- A straight core between the butt and tip within the body of the pile.
- Uniform taper from butt to tip.

2-5. Source.

Usually, timber piles are straight tree trunks cut off above ground swell, with branches closely trimmed and bark removed (figure 2-l). Occasionally, sawed timber may be used as bearing piles.

2-6. Strength.

The allowable load on timber piles is based on pile size, allowable working stress, soil conditions, and available driving equipment. These factors are discussed in chapters 5 through 7. The customary allowable load on timber piles is between 10 and 30 tons. Higher loads generally require verification by pile load tests. For piles designed as columns, working stresses (compression parallel to the grain) for various types of timber are listed in table 2-2.

2-7. Durability.

A principal disadvantage of timber piles is lack of durability under certain conditions. Piles are subject to fungi (decay), insects, and marine borers. Design life depends on the species and condition of the wood, the amount and type of preservative treatment, the degree of exposure, and other factors. Chapter 8 discusses maintenance and rehabilitation.

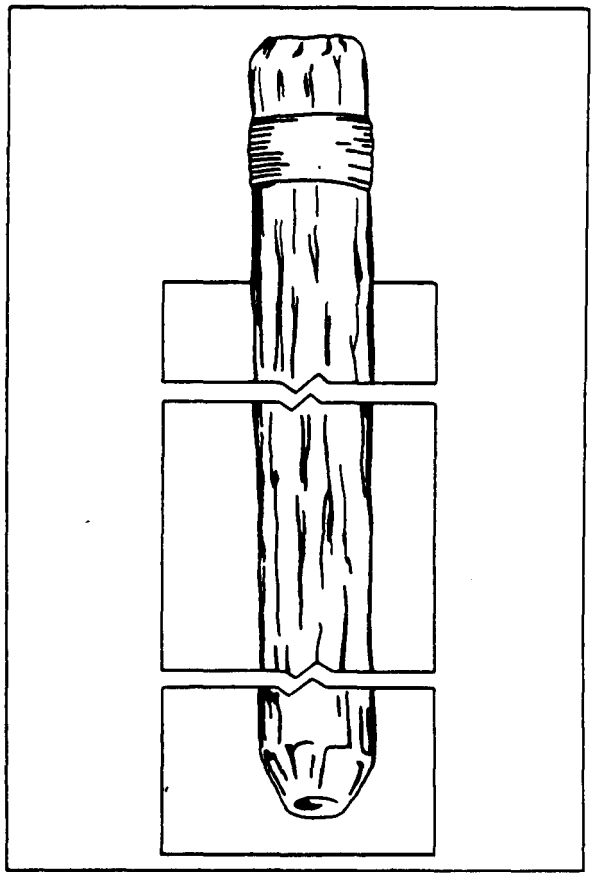

Figure 2-1 Typical timber bearing pile

2-8. Availability.

Timber suitable for piling is abundant in many parts of the world (see appendix). Timber piling may be obtained from local stocks or cut from standing timber. The native stock may be used untreated, or a preservative may be applied as discussed in chapter 8.

2-9. Maintenance.

Because of deterioration, considerable treatment and maintenance is required on

TABLE 2-2. WORKING STRESSES FOR TIMBER

Species and Commercial Grade U S Structural Timber	Allowable Unit Stress in Pounds Per Square Inch[1]				
	Extreme Fiber in Bending and Tension Parallel To Grain	Horizontal Shear	Compression Perpendicular To Grain	Compression Parallel To Grain	Modules of Elasticity
CYPRESS SOUTHERN:					
1700f[2] grade	1700	145	360	1425	1,200,000
1300f grade	1300	120	360	1125	1,200,000
DOUGLAS FIR, COAST REGION:					
2150f dense select structural	2150	145	455	1550	1,600,000
1900f select structural	1900	120	415	1450	1,600,000
1700f dense No. 1	1700	145	455	1325	1,600,000
1450f No. 1	1450	120	390	1200	1,600,000
1100f No. 2	1100	110	390	1075	1,600,000
DOUGLAS FIR, INLAND EMPIRE:					
Select structural	2150	145	455	1750	1,600,000
Structural	1900	100	400	1400	1,500,000
Common structural	1450	95	380	1250	1,500,000
HEMLOCK, EASTERN:					
Select structural	1300	85	360	850	1,100,000
Prime structural	1200	60	360	775	1,100,000
Common structural	1100	60	360	650	1,100,000
Utility structural	950	60	360	600	1,100,000
LARCH:					
Select structural	2150	145	455	1750	1,300,000
Structural	1900	120	415	1450	1,300,000
Common structural	1450	120	390	1325	1,300,000
PINE, SOUTHERN LONGLEAF:					
Select structural	2400	120	455	1750	1,600,000
Prime structural	2000	120	455	1400	1,600,000
Merchantable structural	1800	120	455	1300	1,600,000
Structural (square edge and sound)	1800	120	455	1300	1,600,000
No. 1 structural	1600	120	455	1150	1,600,000
PINE, SOUTHERN SHORTLEAF:					
Dense select structural	2400	120	455	1750	1,600,000
Dense structural	2000	120	455	1400	1,600,000
Dense structural (square edge and sound)	1800	120	455	1300	1,600,000
Dense No. 1 structural	1600	120	455	1150	1,600,000
REDWOOD:					
Dense structural	1700	110	320	1450	1,200,000
Heart structural	1300	95	320	110	1,200,000
FOREIGN WOODS					
GROUP I:					
Teak, sal, white siris, jarul, lendia, oak, ash, Philippine mahogany	1800-2700	200	360-500	1680-2000	1,600,000
GROUP II:					
Deodar, chir, poon, gumhar, Norway (northern) pine	1500-2250	150	300-450	1340-1800	1,250,000
GROUP III:					
White deal, kail	1340-2000	100	260-390	1100-1500	1,000,000

[1]Allowable unit stress for compression parallel to the grain when lenght/diameter is less than 11.
[2]The f designates working stress in compression in pounds per square inch

timber piles. Maintenance is discussed in chapter 8.

2-10. Other properties.

a. Length. Length maybe adjusted by simple carpentry (sawing). Timber piles may be cut off if they do not penetrate as far as estimated. Piles driven into water substrata can be adjusted by sawing off the pile tops above water level. They can also be sawed underwater using a saw supported by a framework above the water level. Short piles may be easily spliced.

b. Flexibility. Timber piles are more flexibile than steel or concrete piles which makes them useful in fenders, dolphins, small piers, and similar structures. They will deflect considerably, offer lateral resistance, and spring back into position absorbing the shock of a docking ship or other impact.

c. Fire susceptibility. Timber piles extending above the water line, as in trestles or waterfront structures, are susceptible to damage or destruction by fire.

2-11. Shipping and handling.

Timber piles are easy to handle and ship because they are relatively light and strong. Because they float, they can be transported by rafting particularly for waterfront structures. They can be pulled, cleaned, and reused for supplementary construction such as falsework, trestles, and work platforms.

Section III. STEEL PILES

2-12. Classification.

Steel piles are usually rolled H-sections or pipe piles; although wide-flange (WF) beams are sometimes used. In the H-pile, the flanges and web are of equal thickness. The standard WF shapes have a thinner web than flange. The 14-inch H-pile section weighing 73 pounds per linear foot and the 12-inch H-pile section weighing 53 pounds per linear foot are used most frequently in military construction.

a. H-piles. Steel H-piles are widely used when conditions call for hard driving, great lengths, or high working loads per pile. They penetrate into the ground more readily than other types, partly because they displace relatively little material. They are particularly suitable, therefore, when the bearing stratum is at great depth. Steel piles are adjustable in length by cutting, splicing, or welding.

b. Pipe piles. Pipe piles are either welded or seamless steel pipes which may be driven open-ended or closed-ended.

c. Railroad-rail piles. Railroad rails can be formed into piles as shown in figure 2-2. This is useful when other sources of piles are not available.

d. Other. Structured steel such as I-beams, channels, and steel pipe are often available from captured, salvaged, or local sources. With resourceful design and installation, they can be used as piles when other, more conventional piles are not available.

2-13.Characteristics

a. Resilience. A steel pile is not as resilient as a timber pile; nevertheless, it is strong and elastic. Large lateral loads may cause overstressing and permanent deformation of the steel, although the pile probably will not break. A steel pile may be bent and even kinked to some degree and still support a large load.

b. Penetration.

(1) *H-piles.* A steel H-pile will drive easily in clay soils. The static load generally will

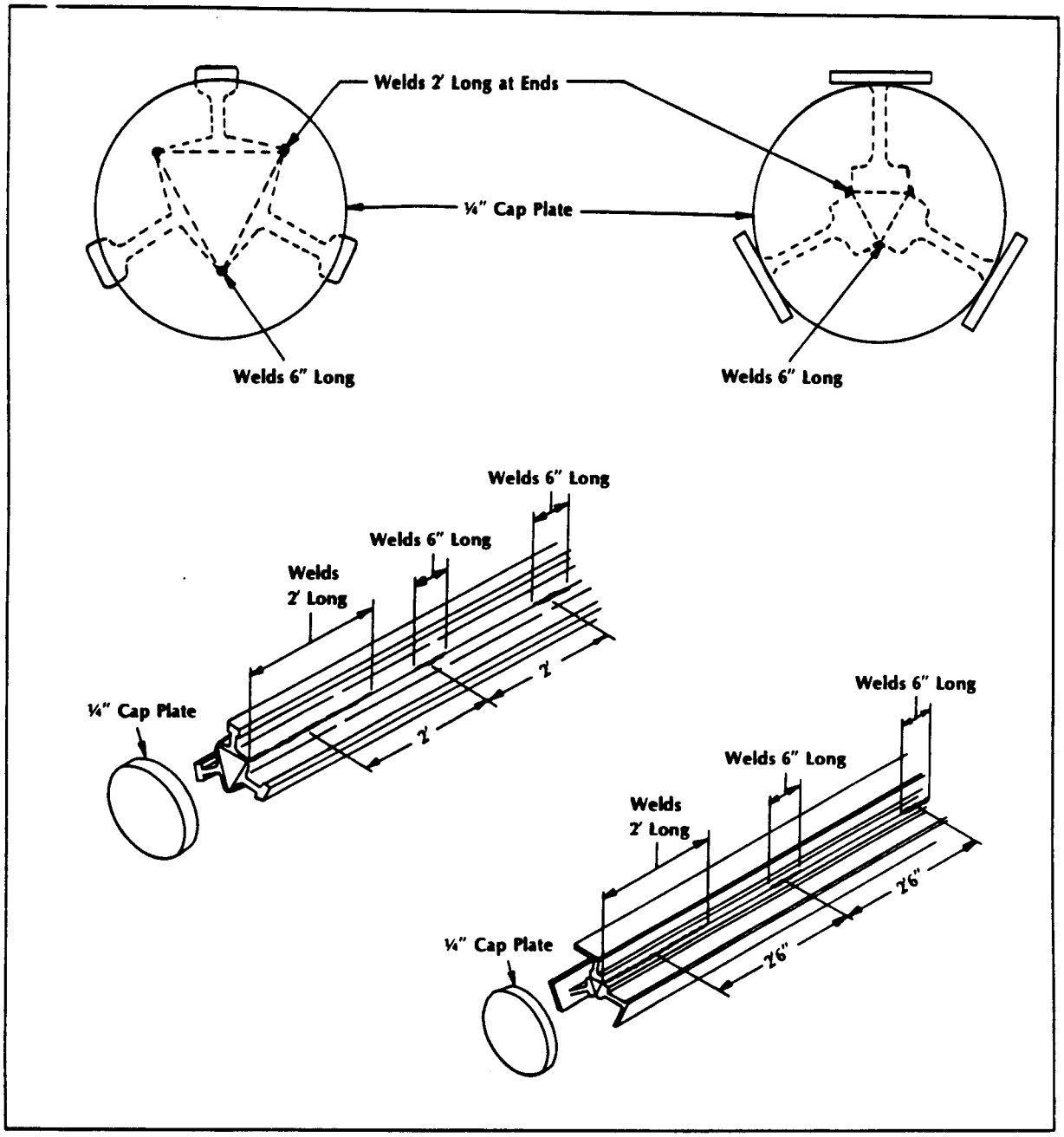

Figure 2-2 Steel rails welded to form piles

be greater than the driving resistance indicates because the skin friction increases after rest. In stiffer clays, the pile may have the soil compacted between the flanges in driving. The clay may grip the pile and be carried down with it. The core of soil trapped on each side of the web will cause the pile to act as a large displacement pile.

(2) *Pipe piles.* Pipe piles driven open-end permit greater driving depths, as less soil displacement occurs. Pipe piles can be readily inspected after driving. If small boulders are encountered during driving, they may be broken by a chopping bit or blasting. Pipe piles are often filled with concrete after driving.

2-14. Source.

a. AFCS. Steel piles can be obtained from AFCS as described in paragraph 2-2.

b. Local supply. In combat, piles or material to construct them can be obtained from captured enemy stock or from the local economy within a theater of operations. Full use should be made of such captured, salvaged, or local materials by substituting them for the standard steel bearing piling indicated by AFCS. Old or new rail sections may be available from military supply channels, captured stocks, or unused rails in captured territory. Figure 2-2 shows methods of welding steel rails to form expedient piles. Such expedient piles are usually fabricated in lengths of 30 feet.

2-15. Strength.

The strength of steel piles is high, thus permitting long lengths to be handled. Lengths up to 100 feet are not uncommon, although piles greater than 60 feet require careful handling to avoid excessive bending stresses. Pipe piles are somewhat stiffer than rolled steel sections. The allowable load on steel piles is based on the cross-sectional area, the allowable working stress, soil conditions, and available driving equipment. The maximum allowable stress is generally taken as 0.35 to 0.50 times the yield strength with a value of 12,000 pounds per square inch (psi) used frequently. Allowable loads on steel piles vary between 50 and 200 tons.

2-16. Durability.

Although deterioration is not a matter of great concern in military structures, steel bearing piles are subject to corrosion and deterioration. The effects of corrosion, preventive measures taken to protect steel piles, and remedial measures to correct previous damage are discussed in chapter 8.

2-17. Shipping and handling.

a. Transporting. Although quite heavy, steel piles are easy to handle and ship. They can be transported by rail, water, or truck. Precautions should be taken during shipping and handling to prevent kinking of flanges or permanent deformation. Steel pipes must be properly stored to prevent mechanical damages.

b. Lifting and stacking. H-piles can be lifted from the transport with a special slip on clamp and a bridle sling from a crane. Clamps are attached at points from one fifth to one fourth of the length from each end to equalize the stress. To make lifting easier, a small hole may be burned in a flange between the upper third and quarter points. Then a shackle may be attached to lift the piles into the leads. Piles should be stacked on timbers so that they are kept reasonably straight.

Section IV. PRECAST CONCRETE PILES

2-18. Classification.

Precast concrete piles are steel-reinforced members (sometimes prestressed) of uniform circular, square, or octagonal section, with or without a taper at the tip (figure 2-3). Precast piles range up to 40 or 50 feet in length although longer lengths may be obtained if the piles are prestressed. Classification is basically by shape and is covered in paragraph 2-20.

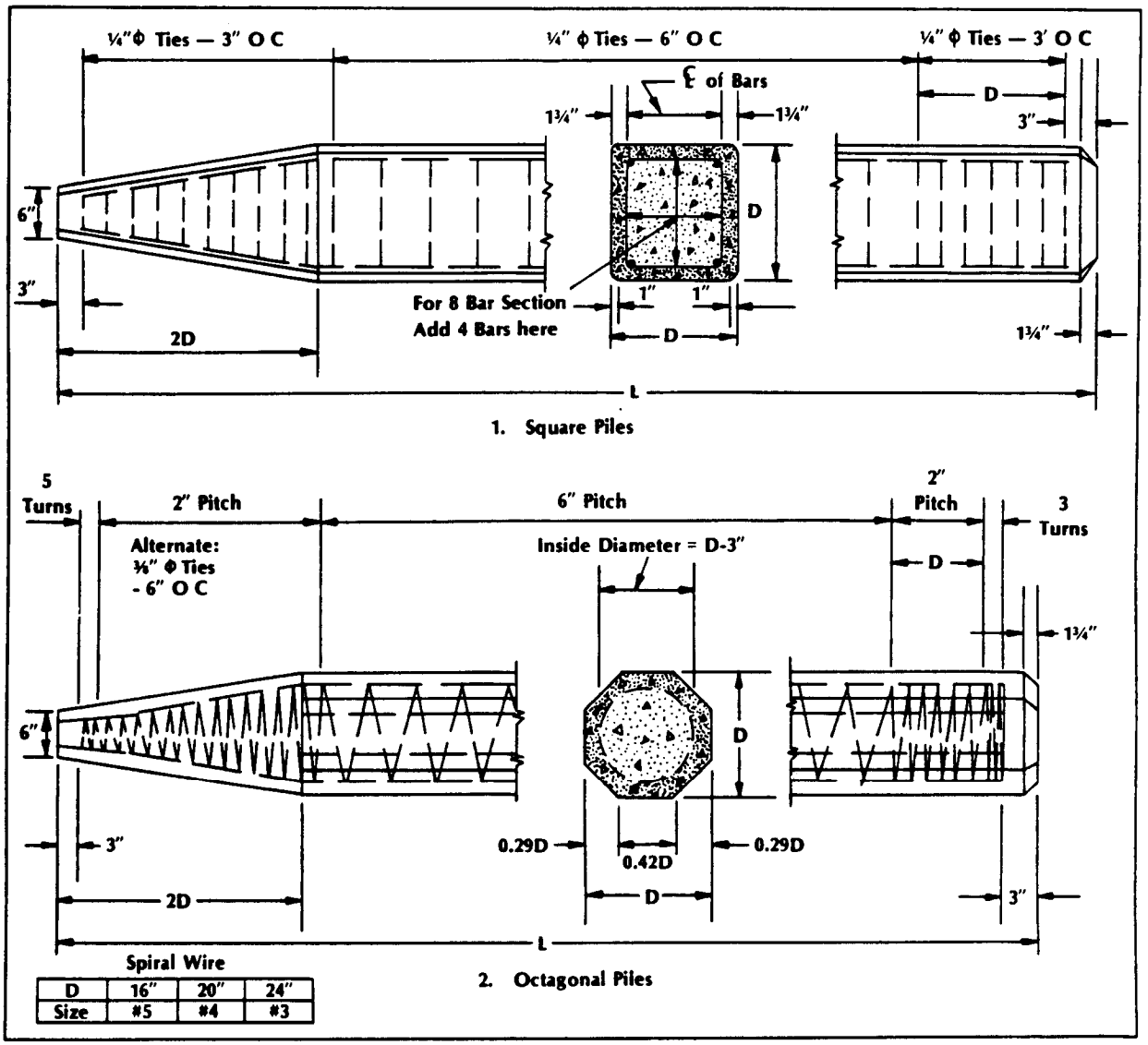

D	16"	20"	24"
Size	#5	#4	#3

Figure 2-3 Designs of precast concrete piles

2-19. Characteristics.

Precast piles are strong, durable and may be cast to the designed shape for the particular application. The process of precasting is not available in the theater of operations. They are difficult to handle unless prestressed, and they displace considerable ground during driving. Length adjustment is a major difficulty requiring both the chiseling of the concrete and the cutting of the reinforcing rods.

2-20. Source.

Precast concrete piles are manufactured in a casting yard, at the job site, or at a central location. The casting yard is arranged so the

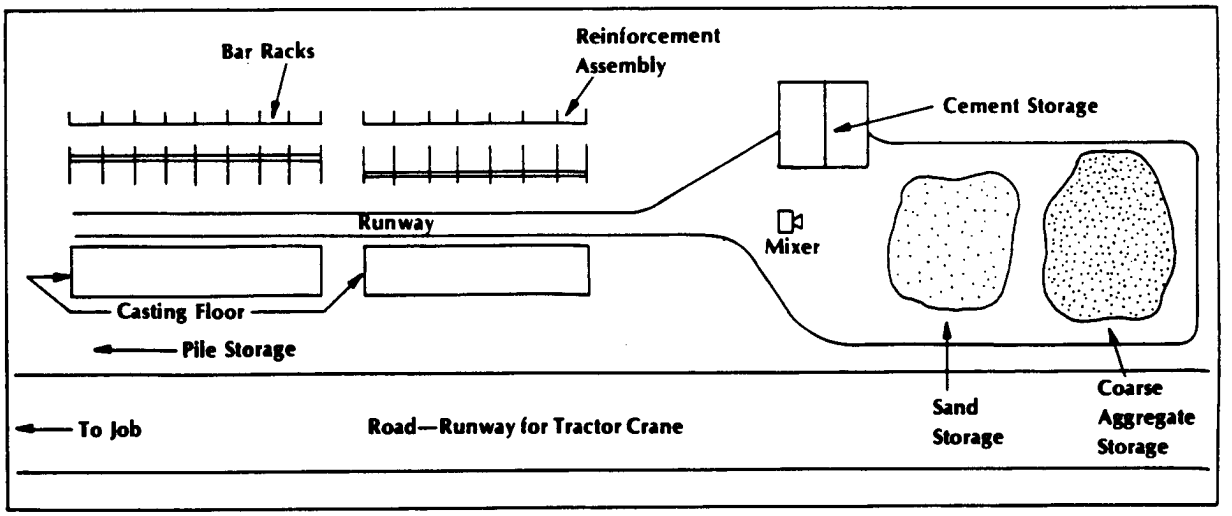

Figure 2-4 Layout of small casting yard

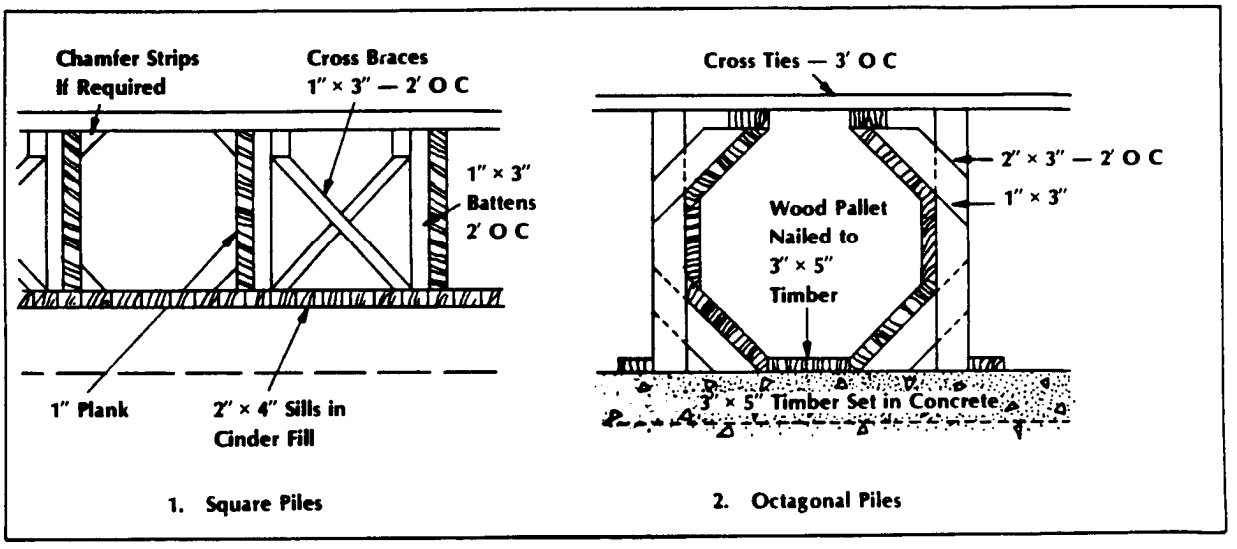

Figure 2-5 Wooden forms for casting concrete piles

piles can be lifted from their forms and transported to the pile driver with a minimum of handling (figure 2-4). The casting yard includes storage space for aggregates and cement, mixing unit, forms, floor area for the casting operations, and sufficient storage space for the completed piles. The casting yard should have a well-drained surface that is firm enough to prevent warping during the period between placement and hardening. Cement and aggregates may be handled by wheelbarrows or buggies. Additional storage space may be needed for the completed piles.

a. Forms. Forms for piles may be of wood (figure 2-5) or metal. They must be tight to prevent leakage, firmly braced, and designed for assembly and disassembly so that they

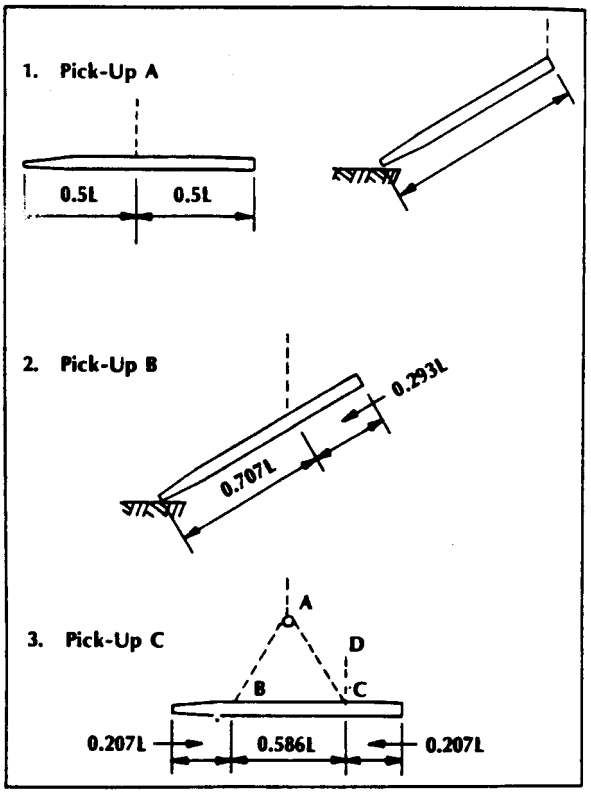

Figure 2-6 Handling precast concrete piles

can be reused. Forms must be thoroughly cleaned and oiled with a nonstaining oil before use.

b. Reinforcement. For precast concrete piles subjected to axial loadings, steel reinforcement provides resistance to the stresses caused by handling and driving. Three methods of handling concrete piles are illustrated in figure 2-6. Depending on the method used, the size and number of longitudinal reinforcement bars are determined from design charts in figure 2-7. These charts are based upon an allowable stress of 1,400 psi in the concrete and 20,000 psi in the steel, without allowance for impact. Minimum reinforcement cages are assembled as shown in figure 2-4. Adequate spiral reinforcing at the pile head and tip is necessary to reduce the tendency of the pile to split or span during driving.

c. Placement. When concrete is placed in the forms by hand, it should be of plastic consistency with a 3-inch to 4-inch slump. Use a concrete mix having a l-inch to 2-inch slump with concrete vibrators. Reinforcement should be properly positioned and secured while the concrete is placed and vibrated. Details concerning the design of concrete mixes are contained in TM 5-742.

d. Curing. Forms should not be removed for at least 24 hours after concrete is placed. Following the removal of the forms, the piles must be kept wet for at least seven days when regular portland cement is used, and three days when high-early strength cement is used. Curing methods are discussed in TM 5-742. Pending and saturated straw, sand, or burlap give good results. The piles should not be moved or driven until they have acquired sufficient strength to prevent damage. Each pile should be marked with a reference number and the date of casting.

2-21. Strength.

Precast concrete piles can be driven to high resistance without damage. They are assigned greater allowable loads than timber piles. As with other pile types, allowable loads are based on the pile size, soil conditions, and other factors. Customary allowable loads range from 20 to 60 tons for a 10-inch diameter precast concrete pile and 70 to 200 tons for an 18-inch square precast concrete pile.

2-22. Durability.

Under ordinary conditions, concrete piles are not subject to deterioration. They can be used above the water table. Refer to chapter 8 for additional information on durability.

2-23. Availability.

Precast piles are available only when the casting facility is nearby. See paragraph 2-20.

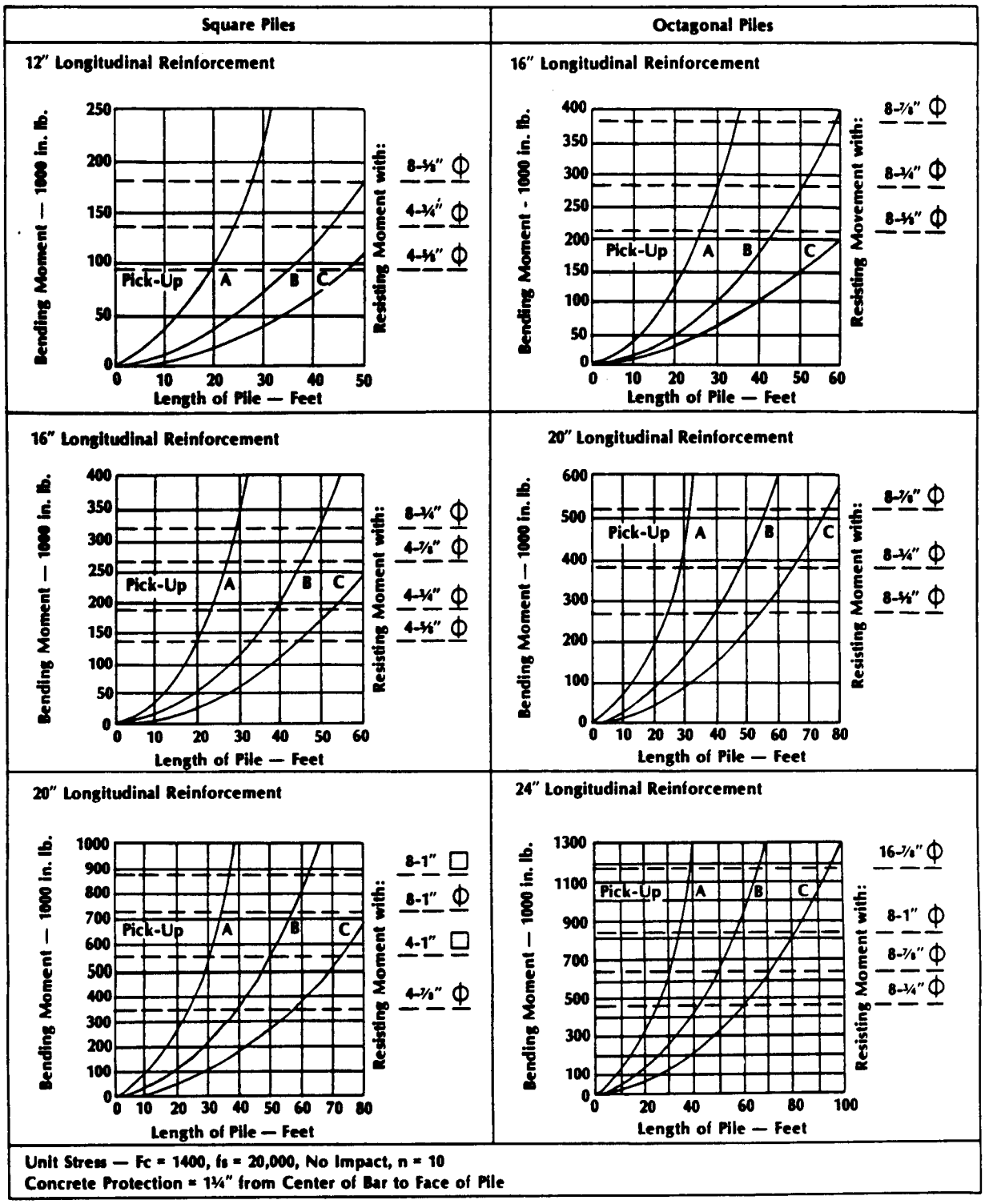

Figure 2-7 Precast concrete pile design charts

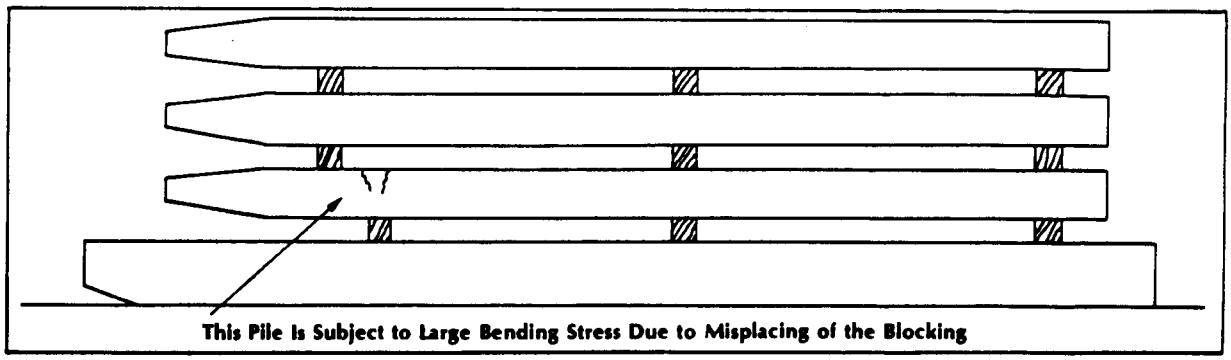

Figure 2-8 Blocking of stacked concrete piles

2-24. Shipping and handling.

a. Handling. Piles should be handled in accordance with the procedure selected for design (figure 2-6). For placement, piles may be lifted by cables and hooks looped around the pile at the desired point. To prevent wear to the cable, use short lengths of wood or other cushioning material, Piles designed for two-point support (figure 2-6, 3) and lifted by cables require the following arrangement.

- .A sheave is required at point A so that the cable will be continuous from point B over the sheave at A to point C. This cable is an equalizer cable since the tension in AB must be the same as that of AC. Unless an equalizer is used, care must be taken in lifting the pile so that tension in the cables is equal; otherwise, the entire load may rest on one end.

- When the pile is raised to a vertical position, another line, CD, is attached. When drawn up, the sheave at A shifts toward C.

- An additional line is needed with this cable arrangement to prevent the pile from getting out of control when it is raised to a vertical position.

b. Shipping and storage. If piles are to be stacked for storage or shipment, the blocking between the tiers must be in vertical lines so that a pile in a lower tier will not be subject to bending by the weight of the piles above. An example of improper stacking is shown in figure 2-8. A forklift or specially equipped front-end loader can be used to move piles from the storage area to the work area. Whenever possible, locate the casting site as close as possible to the job site. Transportation by barge is the best method, if feasible.

Section V. CAST-IN-PLACE PILES

2-25. Classification.

Cast-in-place piles are either cased or uncased. Both are made at the site by forming a hole in the ground at the required location and filling it with a properly designed concrete mix.

a. Cased. The concrete of a cased pile is cast inside a metal casing or pipe left in the ground. The casing is driven to the required depth and cleaned before placement of concrete. If the casing is relatively thin, a mandrel is used to drive the casing. Many different kinds of shells and mandrels are available commercially, but not through military supply channels. Those of foreign manufacture may be available in a theater of operation.

b. Uncased. Uncased concrete piles referred to as drilled piers are frequently used. Various augers are used for drilling holes up to 72 inches in diameter with depths up to 60 feet or more. Auger holes are excavated by the dry process. The bottom of the pier maybe under-reamed at the base, if desired, to provide greater end-bearing area or resistance against uplift forces. Drilling mud advancing through submerged granular materials keeps the hole open. The dry shaft is filled with concrete. A tremie pipe is used through the drilling mud. Steel reinforcement may be used in the concrete.

2-26.Characteristics.

The characteristics of cast-in-place piles depend greatly on the quality of workmanship and characteristics of the soils and support environment. Materials for concrete construction are readily available in many military situations, thus drilled piers have some military application. They require large diameter augers. Installation requires better than average workmanship. Groundwater is influential in determining the difficulty of installation. Even small inflow quantities of water may induce caving, thus requiring the use of casing or drilling mud. Drilled piers can provide a rapid and economical method of pile installation under many conditions.

2-27. Strength and durability.

Cast-in-place piles are strong. Large loads can be carried by cast-in-place piles depending on the cross-sectional area of the pile. Like precast piles, cast-in-place piles are durable. If the pile is cased, even though the casing should deteriorate, the concrete portion will remain intact.

2-28. Construction.

Construction of cast-in-place piles is described in chapter 4.

Section VI. SHEET PILES

2-29.Classification.

Sheet piles vary in use and materials. They may be classified by their uses. They differ from previously described piles in that they are not bearing piles, but are retaining piles. Sheet piles are special shapes of interlocking piles made of steel, wood, or concrete which form a continuous wall to resist horizontal pressures resulting from earth or water loads. The term sheet piling is used interchangeably with sheet piles.

2-30. Uses.

Sheet piles are used to resist earth and water pressure as a part of a temporary or permanent structure.

a. Bulkheads. Bulkheads are an integral part of watefront structures such as wharves and docks. In retaining structures, the sheet piles depend on embedment support, as in cantilever sheet piling, or embedment and anchorage at or near the top, as in anchored sheet piling.

b. Cofferdams. Cofferdams exclude water and earth from an excavation to facilitate construction.

c. Trench sheeting. Trench sheeting when braced at several points is termed braced sheeting.

d. Small dams and cutoff walls. Sheet piles may be used to form small dams and more frequently cutoff walls beneath water-retaining structures to control seepage through the foundations.

e. Bridge piles. Sheet piles are used in the construction of bridges and left in place. For example, a pier may be formed by driving steel sheet piling to create a circular enclosure,

TABLE 2-3. PROPERTIES OF STEEL SHEET PILING

Type	Class	Section Number*	Nominal Width B (inches)	Nominal Web Thickness (inches)	Section Modulus per foot of Wall (cubic inches)	Weight	
						pounds/square foot of wall	pounds/linear foot
I	a	DA-27	16	⅜	10.7	27	36.0
	b	MA-22	19⅝	⅜	5.4	22	36.0
	c	SA-23	16	⅜	2.4	23	30.7
	d	SA-28	16	½	2.5	28	37.3
II		Z-27	18	⅜	30.2	27	40.5
		Z-32	21	⅜	38.3	32	56.0
		Z-38	18	⅜	46.8	38	57.0
III		S-28	15	⅜	1.9 minimum	28	35.0
		S-32	15	½	1.9 minimum	32	40.0

* DA - Deep arch; MA - Medium arch; SA - Shallow arch; Z - Zee section; S - Straight web.

Types I, II, and III. The type I piling (arch web), type II piling (Z section), and type II piling (straight web) shall be interlocked with adjacent sheet piles.

Type IV. Fabricated sections, type IV, such as corners, Y's, T's, and fillers or intermediate pieces, shall be fabricated by bending, riveting, or welding of types I, II and III piling. Shape of piling, and when required, method of interlock shall be as specified.

excavating the material inside to the desired depth, and filling the enclosed space with concrete.

f. Groins and sea walls. Sea walls are parallel to the coastline to prevent direct wave and erosion damage. Groins or jetties are perpendicular, or nearly so, to the coastline to prevent damage from longshore currents or tidal erosion of the shore when the motion of the water is parallel, or at an angle, to the shoreline.

2-31. Materials.

a. Steel sheet piling. Steel sheet piling possesses several advantage over other materials. It is resistant to high driving stresses, is relatively lightweight, can be shortened or lengthened readily, and maybe reused. It has a long service life, either above or below water, with modest protection. Sheet piling available through military supply channels is listed in table 2-3. Commercially available sizes and shapes are given in TM 5-312. The deep-arch web and Z-piles are used to resist large bending movements (figure 2-9). Sheet pile sections of foreign manufacture, either steel or concrete, should be used when available. The sizes and properties may differ appreciably from types commonly available in the United States.

b. Fabricated timber sheet piling. Timber sheet piling may be fabricated for temporary structures when lateral loads are relatively light. Timber used in permanent structures above water level requires preservative treatment as described for timber piles (chapter 8). Various types of timber sheet piling are shown in figure 2-10. The heads are normally chamfered and the foot is cut at a 60 degree slope to force piles together during driving.

(1) *Wakefield sheet piling.* Wake field piling is used in water and where hard driving is

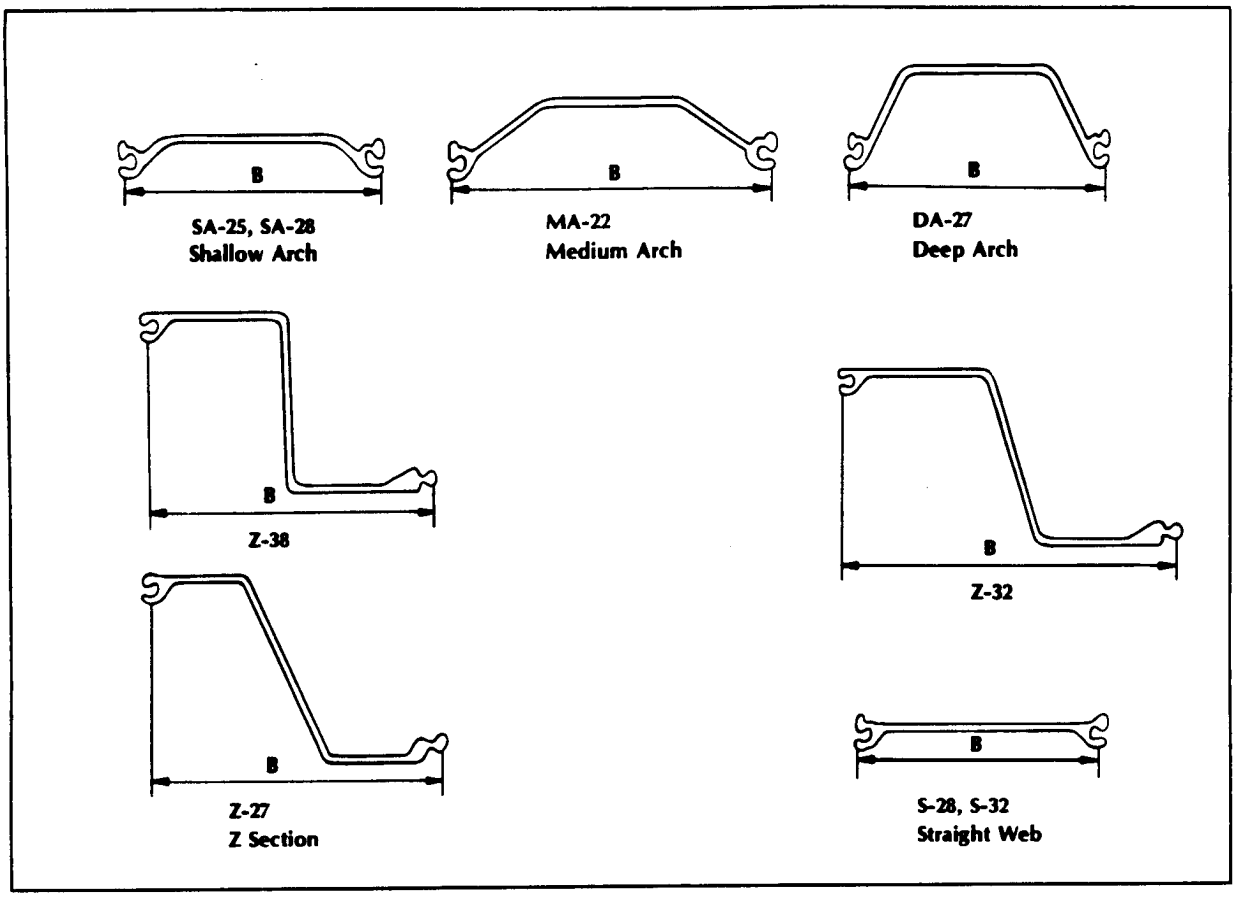

Figure 2-9 Cross-sectional views of steel sheet piling

anticipated. Three rows of equal width planking are nailed and bolted together so that the two outer planks form the groove and the middle plank forms the tongue. Three 2-inch x 12-inch or three 3-inch x 12-inch planks are usually used to form each pile. Two bolts on 6-foot centers and two rows of spikes on 18-inch centers between the bolts hold the planks together. When bolts are not used, the spikes should be driven in offset rows spaced 12 inches apart.

(2) *Tongue-and-groove piling.* Milled tongue-and-groove piling is lightweight and used where watertightness is not required. If heavier timbers are available, a tongue-and-groove can be provided by nailing a strip of wood on one edge forming the tongue and two strips on the opposite side forming the groove. Timber (6-inch x 12-inch) may be interlocked by cutting 2-inch grooves on each side and spiking a spline of hardwood, such as maple or oak, into one groove of the next timber.

(3) *Offset timber sheet piling.* An intermediate type of sheet piling can be fabricated consisting of two rows of 2-inch x 12-inch or 3-inch x 12-inch planking which are bolted or spiked together so that the joints between the two rows of planks are offset.

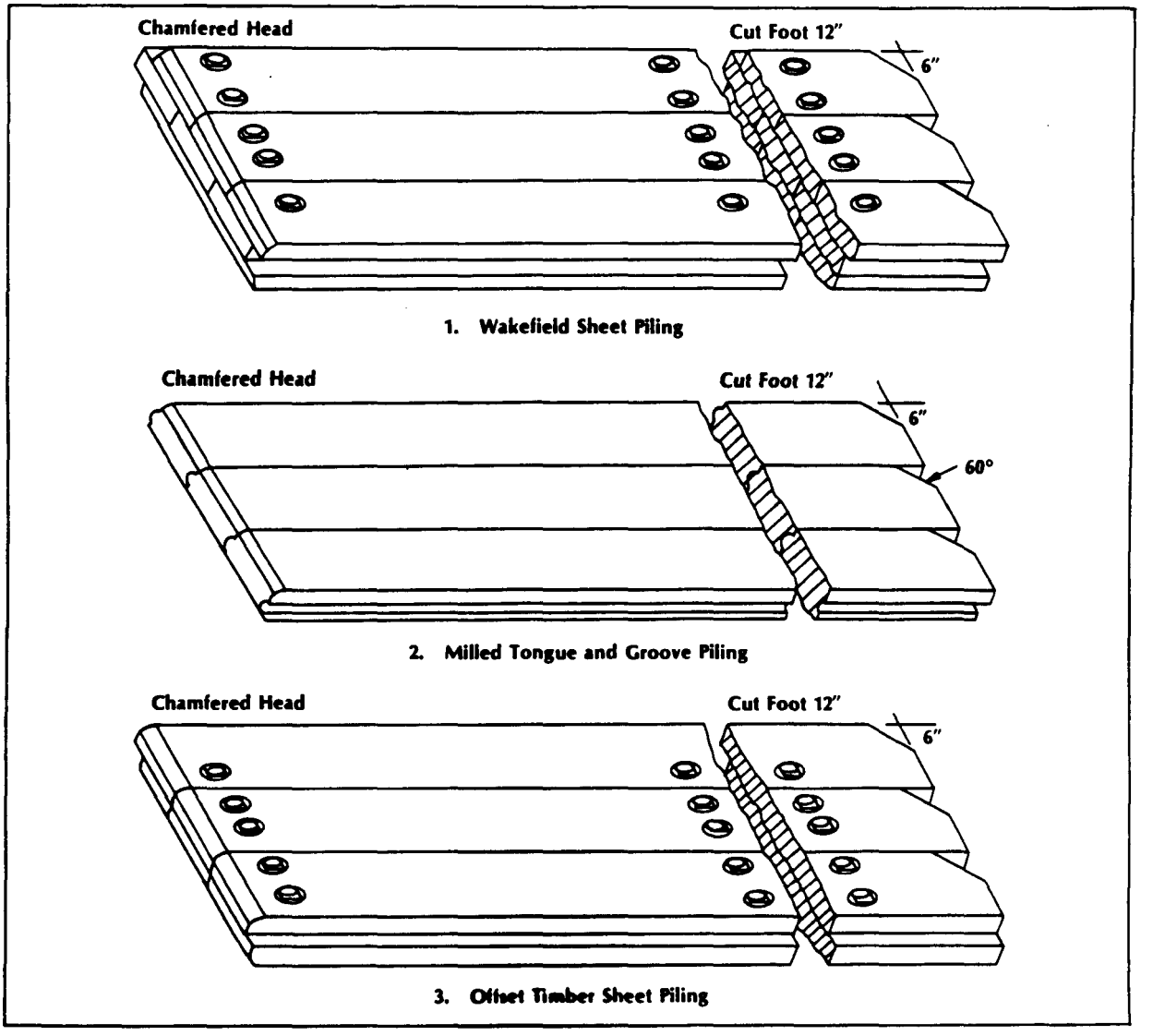

Figure 2-10 Types of timber sheet piles

c. Rail and plank sheet piling. Railroad rails and planking can be used in expedient sheet piling (figure 2-11). The planks should be leveled along both edges to fit snugly against the adjacent rail. This piling is installed by alternately driving a rail, then a plank.

d. Concrete sheet piling. Typical concrete sheet piling (figure 2-12) may be advantageous in military construction when materials for their construction are available. Due to their strength and durability, they adapt well to bulkhead construction.

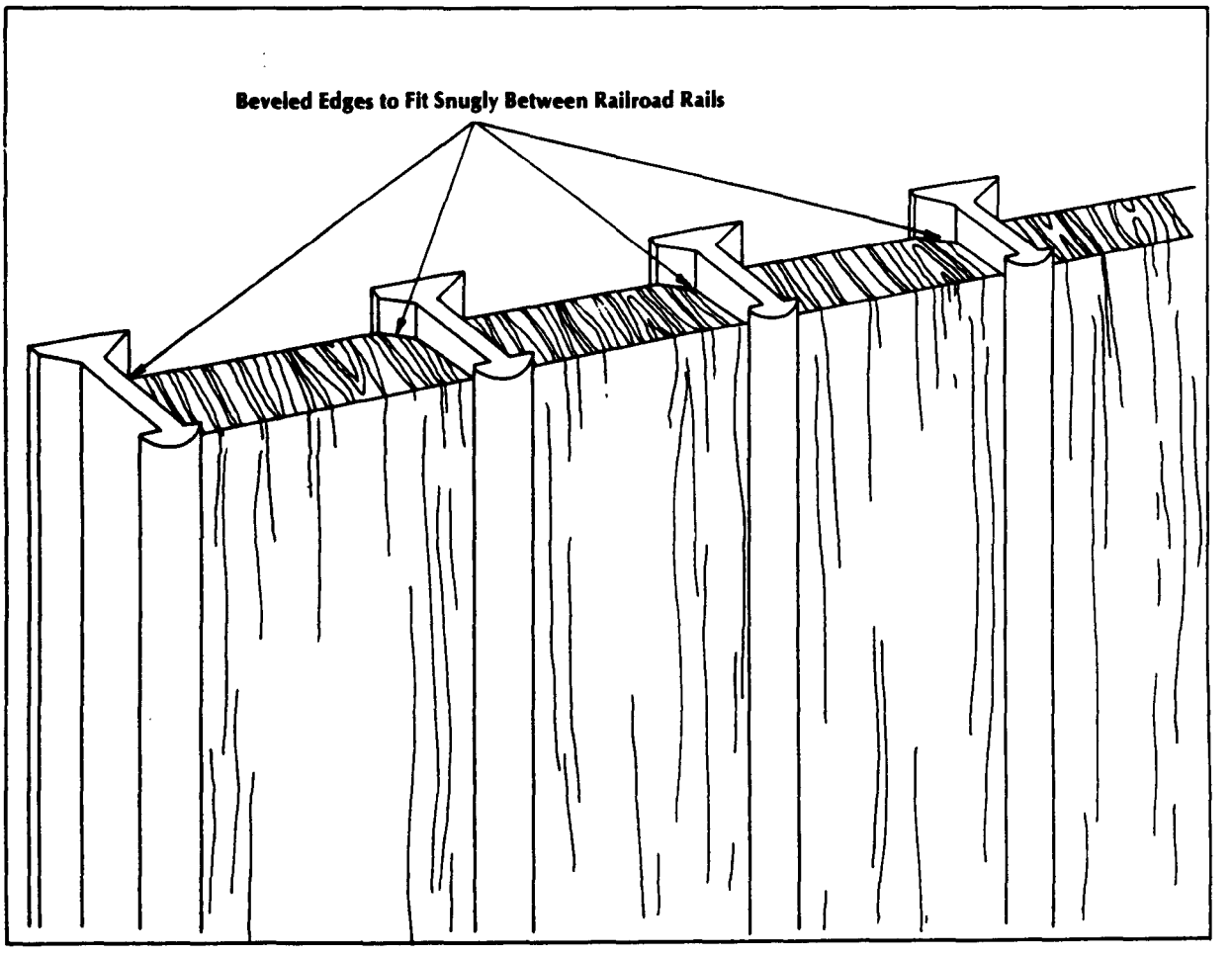

Figure 2-11 Rail and plank sheet piling

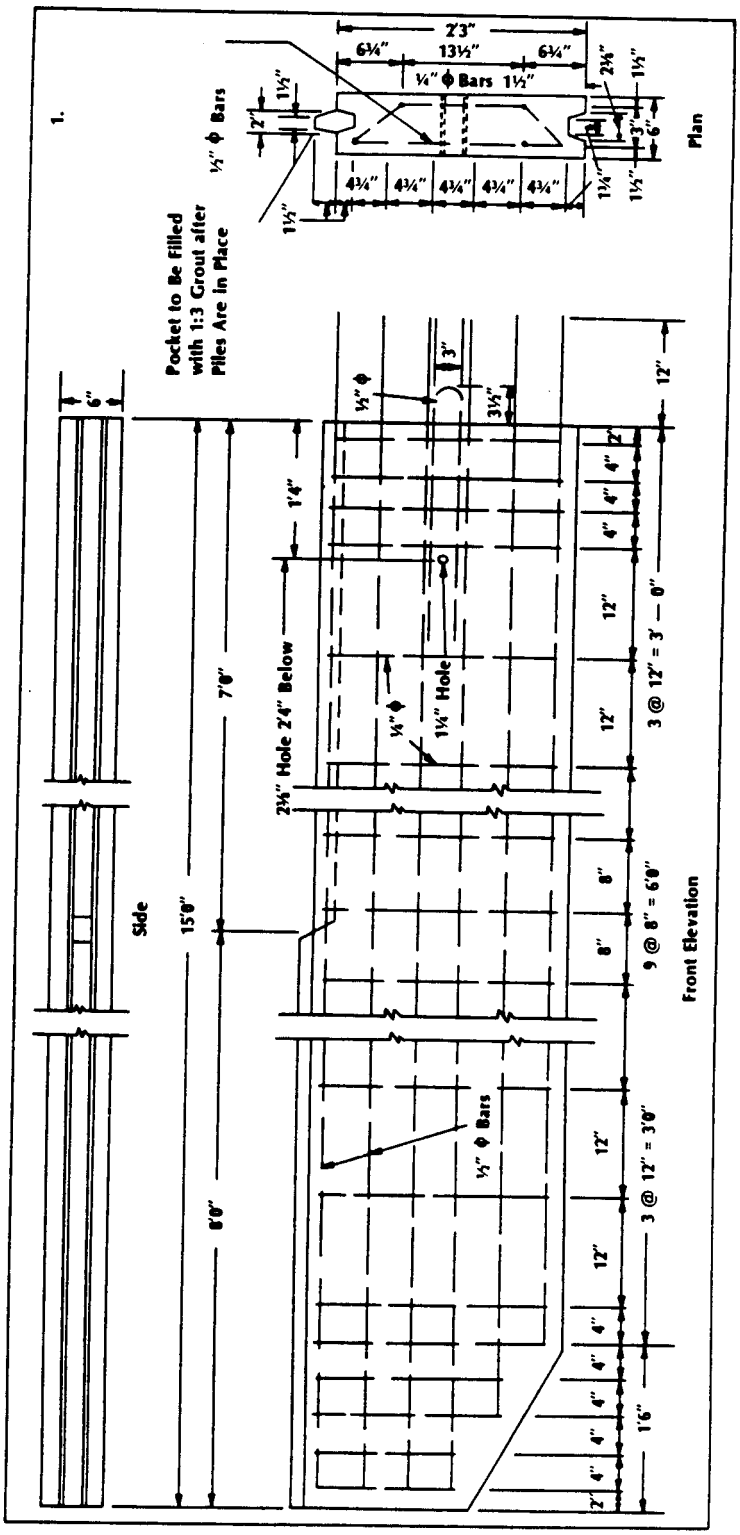

Figure 2-12 Designs of concrete sheet piles

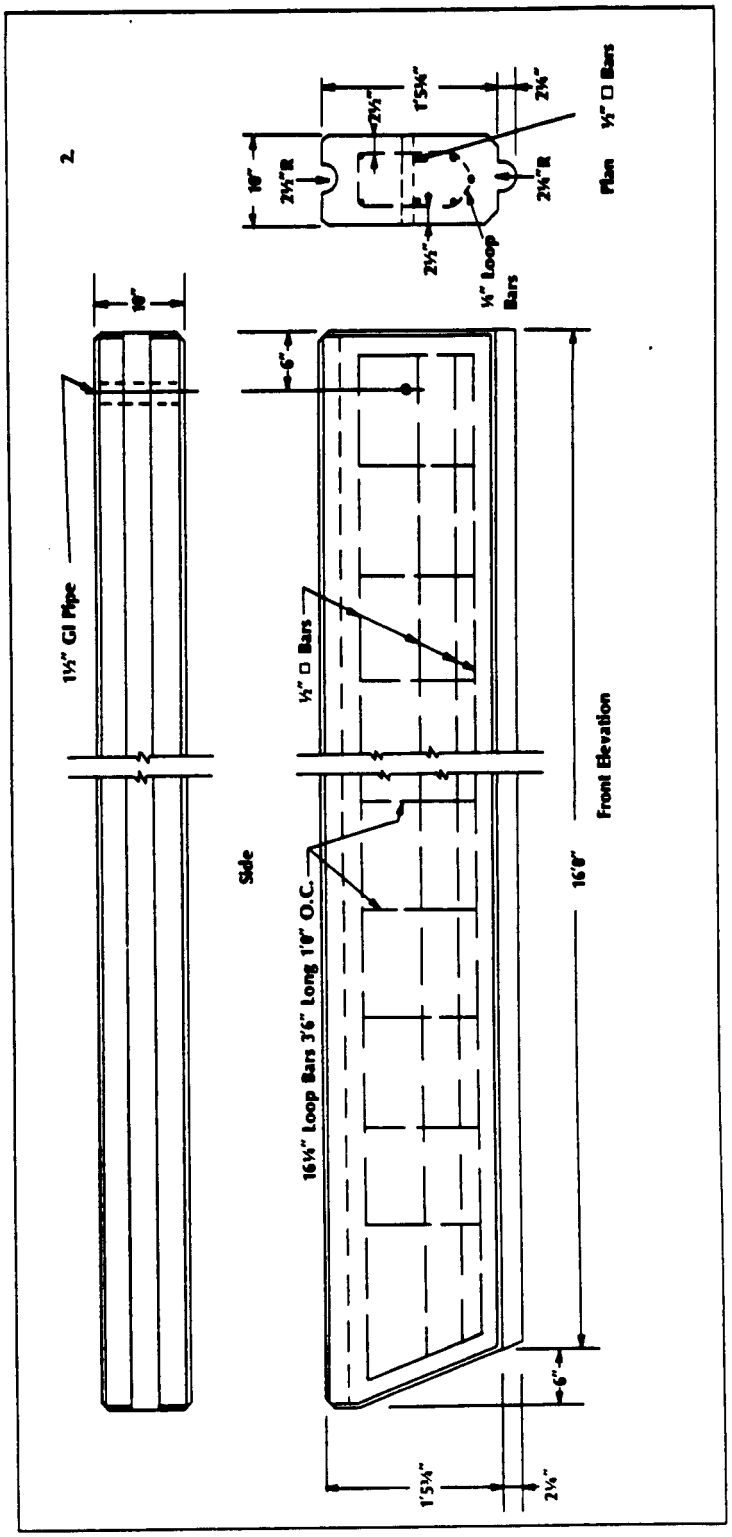

Figure 2-12 Designs of concrete sheet piles (Continued)

CHAPTER 3
PILE-DRIVING EQUIPMENT

Section I. STANDARD PILE-DRIVING EQUIPMENT

3-1. Basic driving and installing methods.

Piles are installed or driven into the ground by a rig which supports the leads, raises the pile, and operates the hammer. Rigs are usually manufactured, but in the field they may be expedient, that is, constructed with available materials. Modern commercial rigs use vibratory drivers while most older and expedient rigs use impact hammers. The intent is the same, that is to drive the pile into the ground (strata).

3-2. Rig mounting and attachments.

Pile-driving rigs are mounted in different ways, depending on their use. This includes railway, barge, skid, crawler, and truck-mounted drivers. Specialized machines are available for driving piles. Most pile driving in the theater of operations is performed using a steel-frame, skid-mounted pile driver or power cranes, crawlers, or truck-mounted units, with standard pile-driving attachment (figure 3-1). The attachments available through military supply channels include adapters (figure 3-2) used to connect the leads to the top of the crane boom leads and a catwalk or lead braces used to connect the foot of the leads to the base of the boom. The leads and catwalk assembly support drop hammers weighing up to 3,000 pounds and diesel hammers weighing up to 13,000 pounds.

3-3. Steel-frame, skid-mounted pile drivers.

A steel-frame, skid-mounted pile driver with a gasoline-driven engine is a class IV item (figure 3-3). This pile driver may be used on the ground or on any permanent structure or sturdy transport. It can drive vertical or batter piles. The reach from the base of the boom to the front of the leads depends upon the weight of the hammer and power units. Reach may be increased by ballasting the back of the skid frame, or by securing it to the deck on which it rests to counterbalance the weight of the equipment. The skid-mounted pile driver consists of the following components.

a. Skid frame. The skid frame is two steel I-beams 40 feet long, crose-braced 8 feet apart at the front of the frame and 12 feet apart at

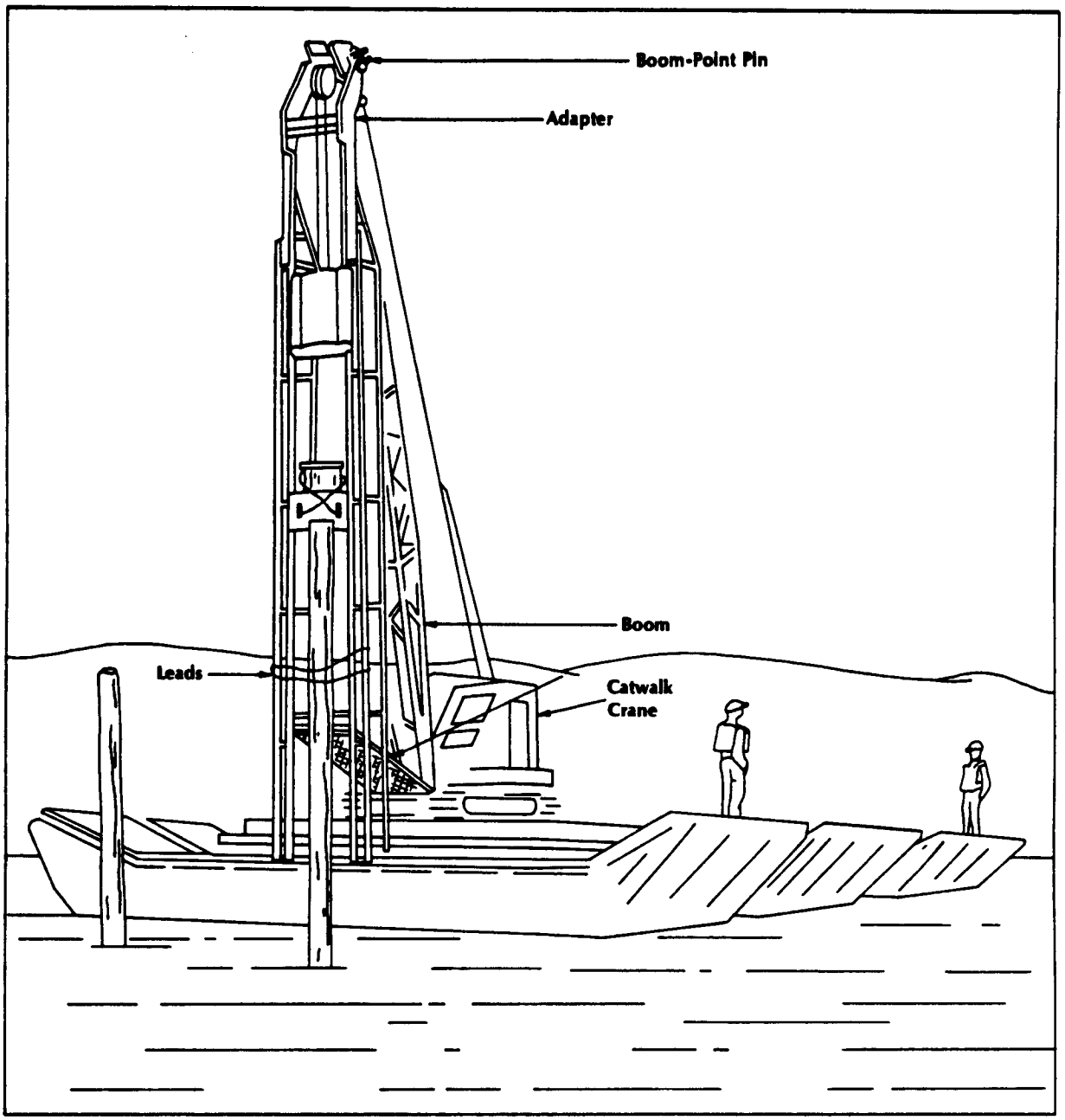

Figure 3-1 Crane with standard pile-driving attachments

the rear of the frame. A platform at the rear of the frame supports the winch.

b. Boom. A 45-foot boom is anchored to the skid frame 16 feet from the front end.

c. Leads. Leads standard to the unit are one 8-foot top section, one 17-foot reversible section, one 10-foot extension, one 15-foot intermediate section, and one 15-foot bottom section, totaling 65 feet. The length of the

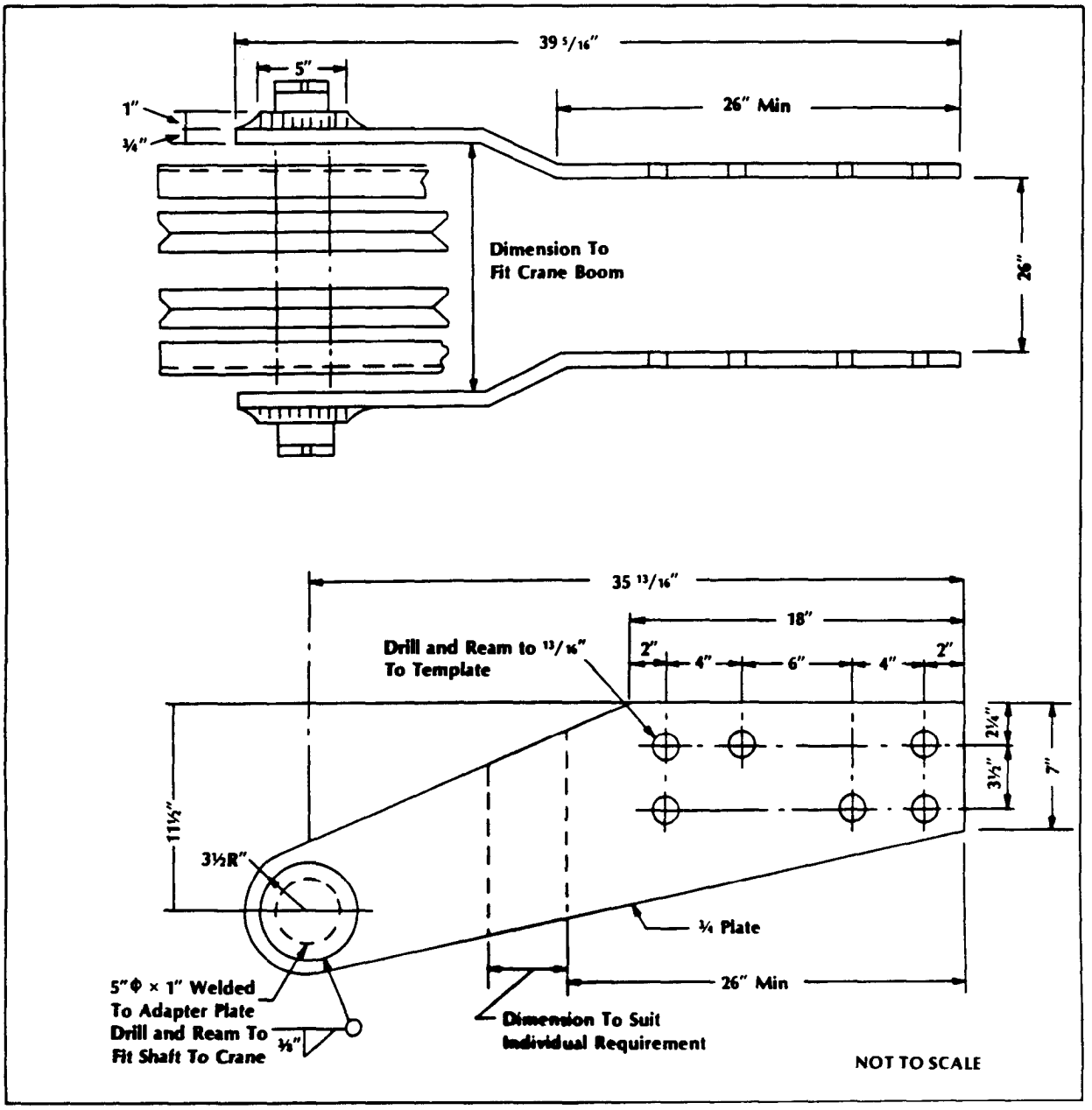

Figure 3-2 Pile driver lead adapter

lead may be reduced to 55 or 47 feet by leaving out sections. The length of the lead is determined by the length of the pile to be driven. The boom is attached to the midpoint of the top 20-foot section. A double-sheave bracket, attached at the top of the leads. handles the hammer and pile lines. The leads to the skid-mounted pile driver can be tilted transversely, longitudinally, or in a combination of these as well as fore and aft of the vertical by adjusting the guides.

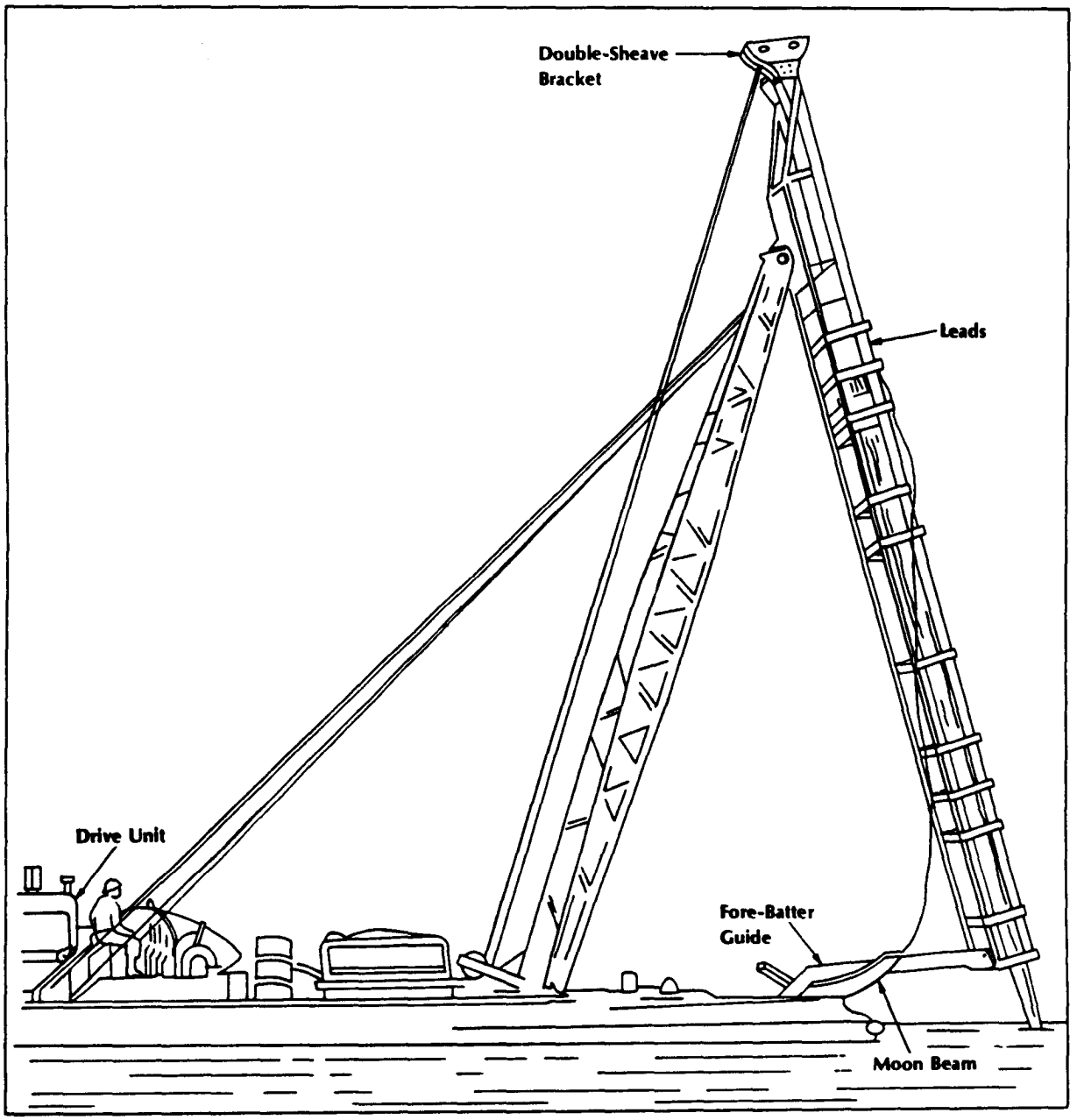

Figure 3-3 Steel-frame, skid-mounted pile driver

d. Guides. Two types of guides permit versatile aligning of the leads.

(1) ***Fore-batter guide.*** The fore-batter guide (figure 3-3), referred to as a spotter, is a beam extending from the forward end of the frame to the leads. It fixes the position of the base of the leads and holds them vertically or at a fore-batter in the plane of the longitudinal axis of the equipment (figure 3-4, 2).

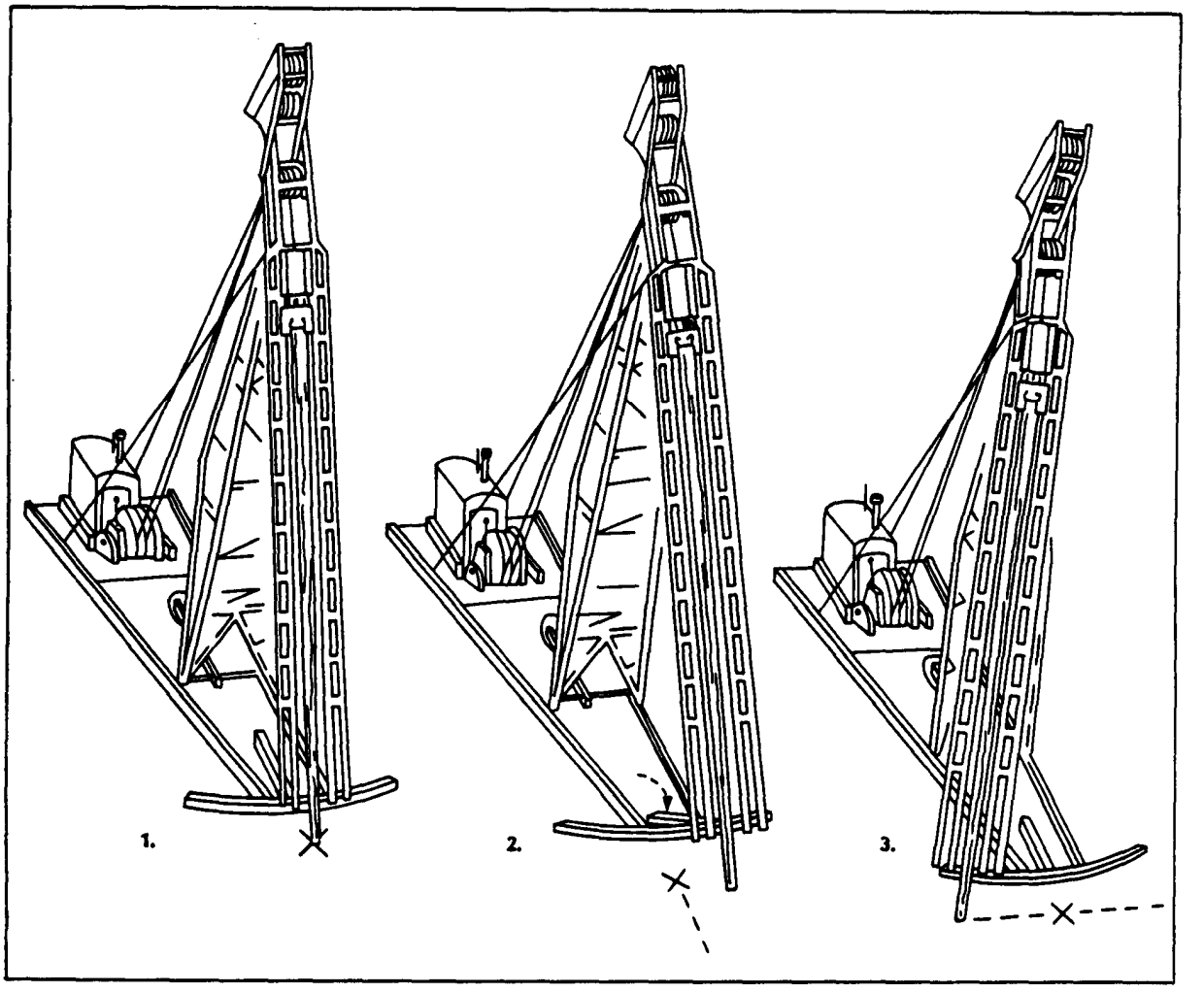

Figure 3-4 Aligning leads of the skid-mounted pile driver

(2) Moon *beam.* The moon beam (figure 3-3) is a curved beam placed transversely at the forward end of the skid frame to regulate side batter.

e. Drive unit. The drive unit (not provided as part of the pile-driver rig) is a 2-drum winch driven by a gasoline, diesel, or steam engine. The drive unit is mounted on the platform at the rear of the skid frame.

f. Hammer. A 5,000-pound, double-acting steam or pneumatic hammer; a 1,800-pound or 3,000-pound drop hammer; or an 8,000-foot-pound or 18,000-foot-pound diesel hammer may be used.

3-4. Driving devices (hammer and vibratory driver).

There are three impact hammers used for pile-driving: the drop hammer, the pneumatic or steam hammer, and the diesel hammer. Drop hammers and diesel hammers are standard engineering equipment. Table 3-1 provides data on selected types of

TABLE 3-1. SELECTION OF DIESEL HAMMERS FOR VARIOUS SIZES OF PILING

Type	Size	Size of Hammer				
		A	B	C	D	E
	Rate Energy (foot-pounds)	8,100	16,000	22,400	8,000	18,000
	Hammer Weight (pounds)	5,000	7,500	10,500	6,000	12,000
Timber Piling	7 inch tip, 12 to 15 inch butt, 40 feet long	X				
	Up to 15 inch butt, 9 inches tip and 10 by 10 inch square piling 40 feet long				X	
	7 inch tip, 13 to 17 inch butt, 60 feet long		X	X		
	Up to 18 inch, 14 inch tip and square piling up to 14 by 14 inch size, 60 feet long					X
Steel Pipe Pile	10 inch outside diameter, No. 7 gage, 25 feet long	X				
	Up to 10 inch outside diameter, No. 7 gage, 25 feet long				X	
	12 inch outside diameter, No. 7 gage, 60 feet long		X	X		
Concrete and Steel H-Pile	8 inch and 10 inch, 40 feet long	X				
	10 inch and 12 inch, 60 feet long		X			
	12 inch and 14 inch, 60 feet long			X		
Steel H-Pile	8 inch, 10 inch, and 12 inch, 40 feet long				X	
	10 inch, 12 inch, and 14 inch, 60 feet long					X
Type Z-27 Sheet Piling	⅜ inch web thickness, 40.5 pound lineal feet, 20 feet long	X			X	
	⅜ inch web thickness, 40.5 pounds lineal feet, 60 feet long		X	X		X
Steel Pipe and Round Concrete Pile	Up to 14 inch diameter, 60 feet long					X

commercially available hammers. Vibratory drivers/extractors are not classified as hammers and do not require pile caps for protection against impact stresses. They are clamped to the pile to vibrate as a unit.

a. Drop hammers. The drop hammer (figure 3-5) is a simple pile-driving hammer consisting of a block of metal raised in the leads by the drive unit, then permitted to drop, striking the pile cap. Drop hammers are cumbersome, and their driving action is slow compared to other hammers. Velocities at impact are high and damage the top of a pile. Two standard drop hammers are available in military supply channels: size one weighs 1,800 pounds; size two weighs 3,000 pounds. The maximum height of fall should be limited to six feet. For most efficient driving, the weight of a hammer twice that of the pile will give the best results. As an expedient, a log hammer (figure 3-6) may be fabricated and used. Drop hammers should be used only in remote sites or for a small number of pilings.

b. Air or steam hammers. The air or steam hammers (figure 3-7) consist of stationary cylinders and moving rams which include a piston and a striking head. The piston is raised by compressed air or steam pressure. If

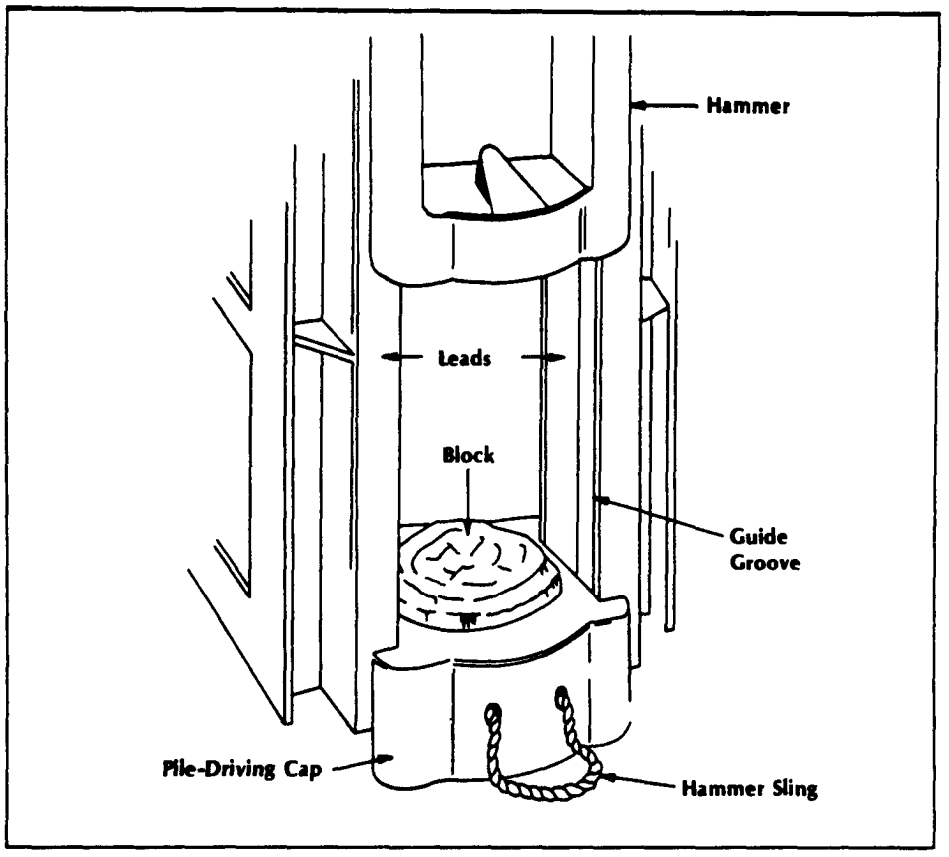

Figure 3-5 Drop hammer and pile cap placed in leads

the fall is gravity, the hammer is simple acting. In double-acting hammers, the air or steam pressure works on the upstroke and downstroke. Because they provide a high rate of blows (90 to 150 blows per minute), they keep the pile moving and prevent the building of friction thus enabling faster driving. The differential-acting hammer uses higher pressures and lower volumes of air or steam. After being raised, the ram is valved to be used for the downstroke.

c. Diesel hammers. Diesel hammers are self-contained and need no air or steam lines. Fuel tanks are a part of the rig. Diesel hammers are well suited for military operations. Table 3-2 contains a list of diesel hammers available through military channels and the types and sizes of piles which can be driven by each hammer. Sizes A and D are suitable for use with 10-ton and 20-ton drivers. Heavier hammers are more suitable for use with 30-ton to 40-ton cranes. Diesel hammers may be either open-ended or closed-ended as shown in figure 3-8.

Diesel hammers function as follows.

- The ram is lifted by combustion of fuel and compressed gas in a chamber between the bottom of the ram and an anvil block in the base of the housing.

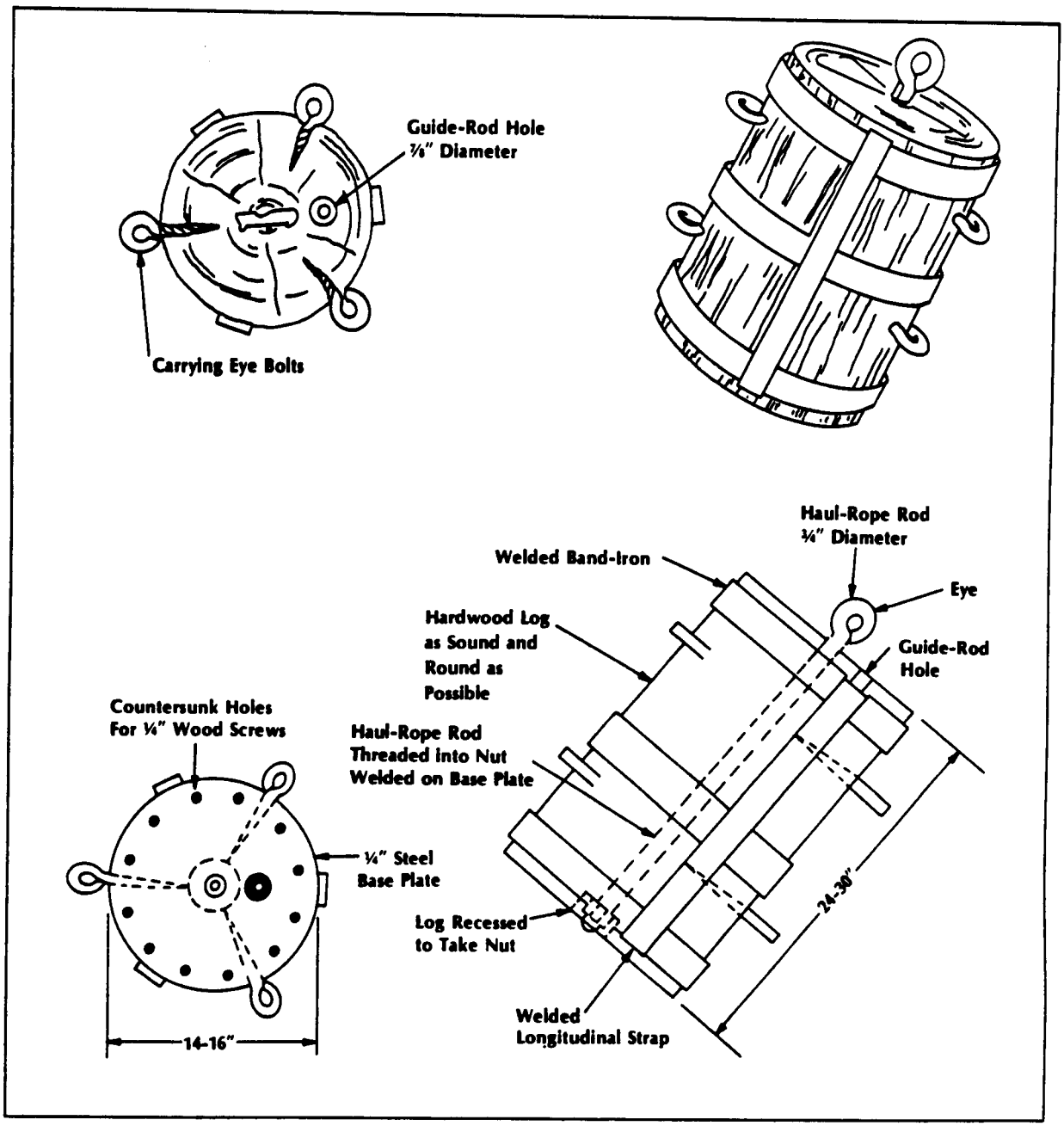

Figure 3-6 Details of expedient log hammer

- The crane-load line raises the ram for the initial stroke, and an automatic trip mechanism allows the ram to drop.
- During this fall, fuel is injected into the combustion chamber by a cam-actuated fuel pump.

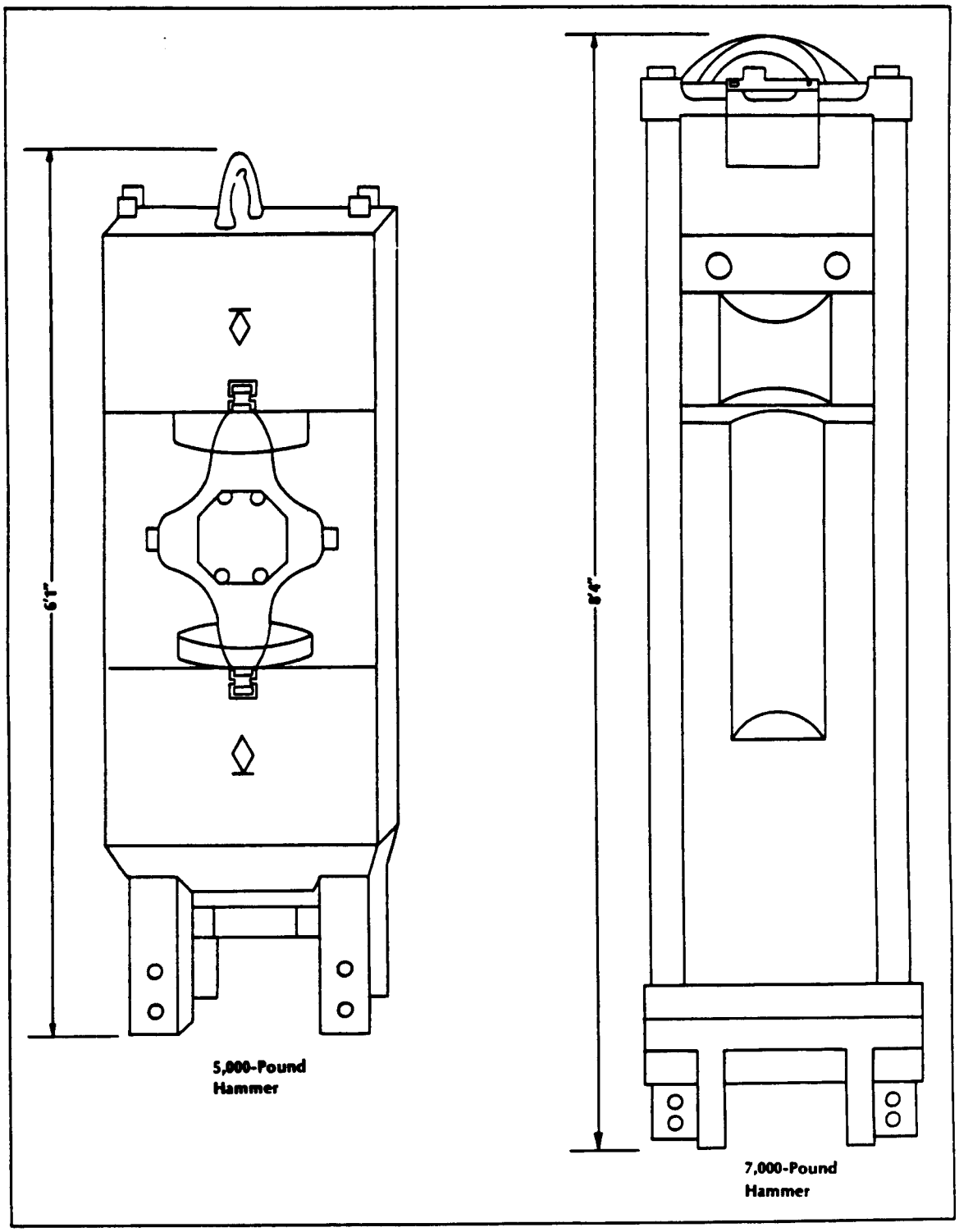

Figure 3-7 Pneumatic or steam pile-driving hammers

TABLE 3-2. PROPERTIES OF SELECTED IMPACT PILE HAMMERS

Rated Energy (foot pounds)	Make	Model	Type[1]	Blows per Minute[2]	Stroke at Rated Energy (inches)	Weight Striking Parts (pounds)
7,260	Vulcan	2	S	70	29	3,000
8,750	MCT[3]	93B3	DB	145	17	1,600
13,100	MKT	10B3	DB	105	19	3,000
15,000	Vulcan	1	S	60	36	5,000
15,100	Vulcan	50C	DF	120	15½	5,000
16,000	MKT	DE-20	DE	48	96	2,000
18,200	Link-Belt	440	DE	86-90	36⅞	4,000
19,150	MKT	11BS	DB	95	19	5,000
19,500	Raymond	65C	DF	100-110	16	6,500
19,500	Vulcan	06	S	60	36	6,500
22,400	MKT	DE-30	DE	48	96	2,800
22,500	Delmag	D-12	DE	42-60		2,750
24,375	Vulcan	0	S	50	39	7,500
24,400	Kobe	K13	DE	45-60	102	2,870
24,450	Vulcan	80C	DF	111	16	8,000
26,000	Vulcan	08	S	50	39	8,000
26,300	Link-Belt	520	DE	80-84	43⅛	5,070
32,000	MKT	DE-40	DE	48	96	4,000
32,500	MKT	S10	S	55	39	10,000
32,500	Vulcan	010	S	50	39	10,000
32,500	Raymond	00	S	50	39	10,000
36,000	Vulcan	140C	DF	103	15½	14,000
39,700	Delmag	D-22	DE	42-60		4,830
40,600	Raymond	000	S	50	39	12,500
41,300	Kobe	K-22	DE	45-60	102	4,850
42,000	Vulcan	014	S	60	36	14,000
48,750	Vulcan	016	S	60	36	16,250

[1]S = single-acting steam; DB = double-acting steam; DF = differential-acting steam; DE = diesel.
[2]After development of significant driving resistance.
[3]For many years known as McKiernan-Terry.

- Continuing its fall, the ram blocks the exhaust ports located in the cylinder and compresses the airlfuel mixture trapped below it to ignition temperature.

- When the ram hits the anvil, it delivers its energy through the anvil to the pile. At the same time, combustion occurs which drives the ram upward. The pressure of the burning gases acts on the anvil for a significant time, thus increasing the magnitude and duration of the driving force.

- As the ram rises, the exhaust and intake ports are uncovered, combustion gases escape, and air enters. In the closed-ended type, the housing extends over the cylinder to form a bounce chamber in which air is compressed by the rising ram. Air trapped and compressed above the piston helps

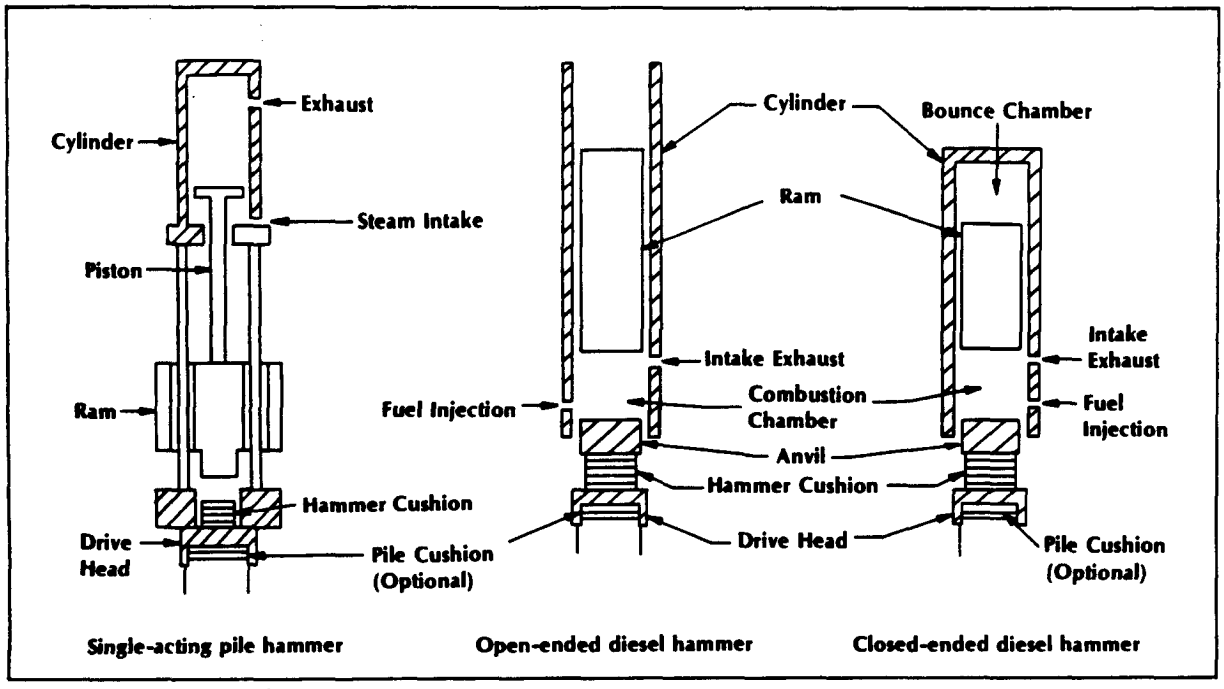

Figure 3-8 Types of pile hammers

stop the ram piston on its upward stroke and accelerates it on its downward stroke.

- The cycle is repeated.

d. Vibratory drivers/extractors. Vibratory drivers are a recent development in pile-driving equipment. They are used in commercial pile construction, especially in driving sheet piling. They are not part of the military inventory. Vibratory drivers usually require either an auxiliary hydraulic or electric power supply. They consist of the vibrating unit which includes the rotating eccentric weights, the suspension system that isolates the vibratory forces from the lifting device, and the clamping system which connects the vibratory driver to the pile. Vibratory drivers have short strokes, less than two inches, and high impulse rates, up to 2,000 pulses per minute. Their driving ability derives from the vibrations and the weight of driver and pile.

3-5. Caps and cushions.

Caps and cushions protect the top of the pile and reduce the damage caused by the impact of the hammer. Although they serve the same purpose, they vary for different types of hammers.

a. Drop hammers. A standard driving cap for timber piles used with a drop hammer is a cast block. Its lower face is recessed to fit over the top of the pile, and its upper face is recessed to receive an expandable block of hardwood in end-grained position to act as a washer (figure 3-5). The cap is fitted with a wire rope sling so that the cap, as well as the hammer, may be raised to the top of the leads when positioning a pile in the leads.

b. Air and steam hammers. The ram of a Vulcan hammer strikes a cap block positioned in the base of the hammer. In other hammers, such as the MKT type, the rams strike directly

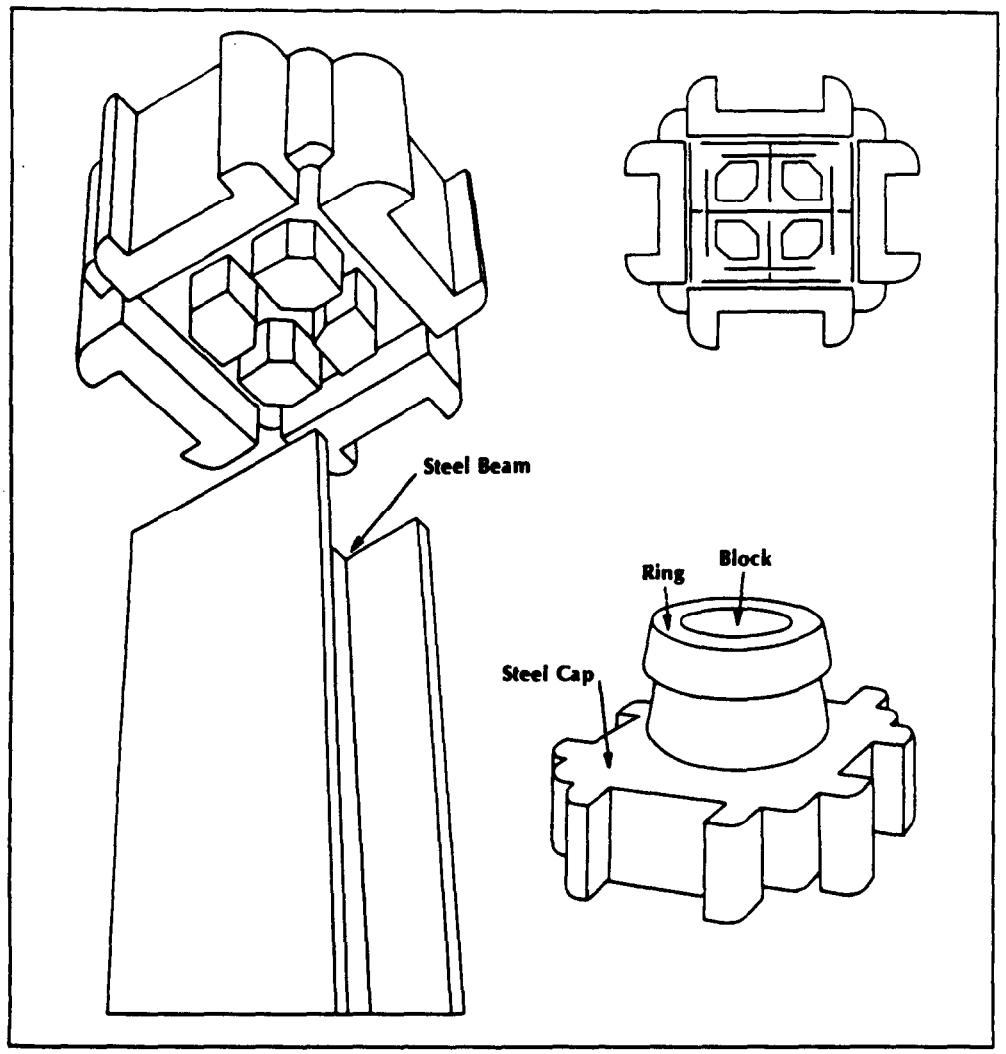

Figure 3-9 Special cap (helmet) for steel pile

on the base or anvil. The top of the pile is protected by a driving cap suspended from the base of the hammer and fitted to the dimensions of the pile. Driving caps for steel H-piles are shown in figure 3-9. The tops of concrete piles are usually protected from local overstress by a pile cushion inserted between the drive head and the pile. The cap block and cushion serve several purposes; however, their primary function is to limit impact stresses in both the pile and hammer. Common types of cushion materials are sheets of Micarta with sheets of aluminum or large oak blocks in end-grained position.

c. Diesel hammers. Military diesel hammers are supplied with cushion blocks inserted between the anvil and the drive cap. The cushion blocks consist of laminated plastic and aluminum or cast nylon. Additional cushioning is required between concrete piles and the pile cushion.

3-6. Pile-driving leads.

Pile-driving leads (figure 3-10) are tracks for sliding the hammer and guides to position and steady the pile during the first part of the driving. Standard steel leads are supplied in l-foot and 15-foot lengths. The 15-foot length is the top section. Leads must be approximately 20 feet longer than the pile to provide space for the hammer and accessories. There are three types of leads.

a. Swinging leads. Swinging leads are hung from the crane boom by a crane line. The bottoms of the leads are held in place while the boom is positioned so that the pile is plumb or at the desired batter. Swinging leads are the lightest, simplest, and least expensive. They permit driving piles in a hole or over the edge of an excavation. Swinging leads require a three-line crane (leads, hammer, and pile). Precise positioning of the leads is slow and difficult.

b. Fixed, underhung leads. A spotter easily and rapidly helps connect fixed, underhung leads to the boom point and to the front of the crane. The leads are positioned by adjusting the boom angle and spotter. A two-line crane is adequate to accurately locate the leads in various positions. The length of the leads is limited by the boom length. Military standard leads are underhung from the crane boom and fixed to the crane by a catwalk. They are comprised of a 15-foot top section and the required number of 10-foot lower sections to make up the required length (see figure 3-l).

c. Fixed, extended leads. Fixed, extended leads extend above the boom point. They are attached with a swivel connection which allows movement in all directions. A spotter connects the bottom of the leads to the front of the crane. A two-line crane is required. A headblock directs the crane lines over the top of the leads. Once the leads are set up, they can be positioned quickly and accurately; however, initial setup time is extensive. Side to-side as well as fore-and-aft adjustment is possible. The military standard skid-mounted pile-driving rig has fixed, extended leads with capabilities of side-to-side and fore-and-aft batter.

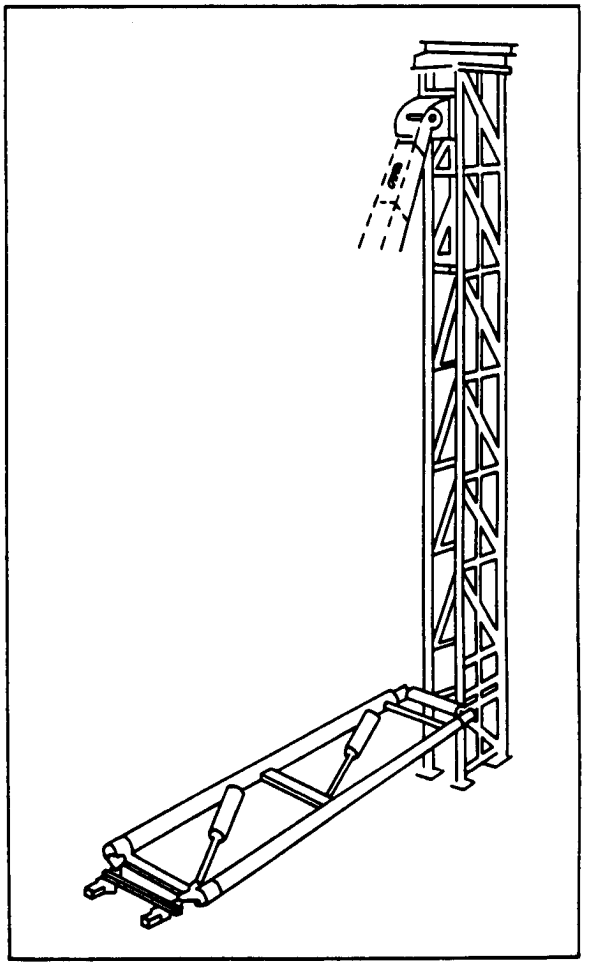

Figure 3-10 Pile-driving leads with bottom brace

3-7. Spotters and lead braces.

The spotter connects the bottom of fixed leads (underhung or extended) to the front of the crane. With military standard leads used with a crane, the catwalk connects between the bottom of the leads and the front of the crane's revolving upper machinery deck. It telescopes for fore-and-aft batter. The front of

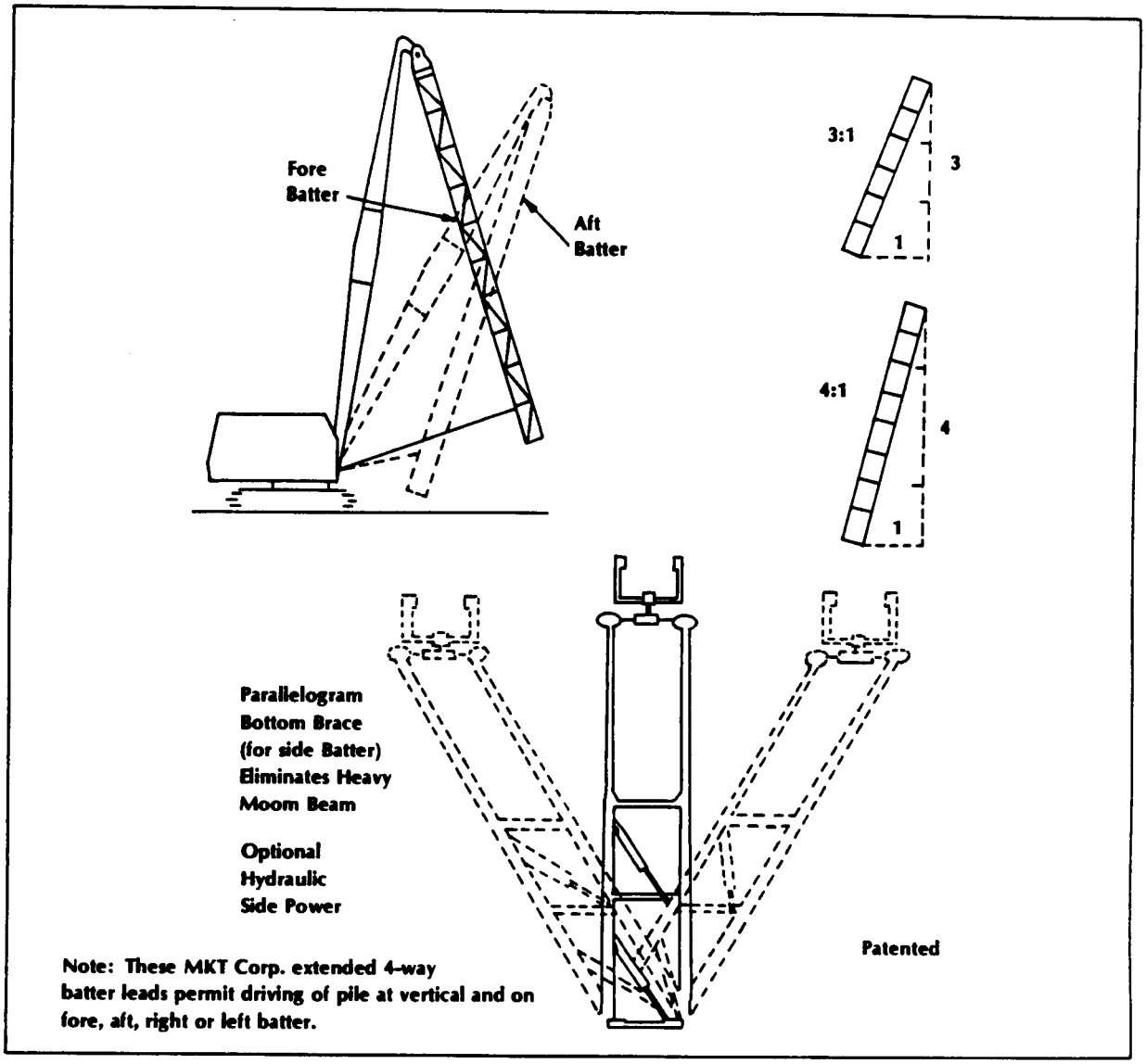

Figure 3-11 Bottom braces for adjusting batter

the spotter is moved for and aft for batter piles, and side to side to plumb piles either hydraulically or manually. Special bottom braces are available which permit this operation (figure 3-11).

3-8. Followers.

Followers are fabricated pile extensions placed between the top of a pile and the hammer. They are used when driving piling below the water surface, especially with a drop hammer (which operates with reduced efficiency underwater) and with the diesel hammer (which cannot operate underwater). Followers are used under fixed or swinging leads and in tight spaces where there is no room for the leads and the hammer, as in a close pile grouping. When followers are used, the computation of the bearing value of the

pile using a dynamic formula is uncertain. Followers must be rugged and constructed to transmit the full impact of the hammer and to hold the hammer and the pile in positive alignment. Followers can be fabricated for timber, steel, and sheet piling.

a. Timber pile follower. The follower is made from around timber of hardwood 10-to 20-feet long. The bottom of the timber is inserted into, and bolted to, a follower cap which is recessed at the bottom the same as a pile cap. The top is trimmed to fit into the pile cap or hammer. If there is insufficient driving space for a follower cap, a flared wrought-steel band is bolted to the bottom of the timber follower.

b. Steel pile follower. For a steel pile follower, a section of the driven pile is reinforced by welding steel plates at the head to lessen damage from repeated use. Extension plates that fit snugly against the pile to be driven are welded to the base.

c. Sheet pile follower. Projecting plates are riveted on each side of the sheet pile being driven. These riveted plates are shaped to fit the form of the pile.

Section II. EXPEDIENT AND FLOATING PILE-DRIVING EQUIPMENT

3-9. Expedient pile drivers.

When standard pile drivers are not available, expedient pile drivers may be constructed.

a. Wood-frame, skid-mounted pile driver. A skid frame is made of two 12-inch x 17-inch timbers 44 feet long. The frame is cross braced with 8-inch x 8-inch and 12-inch x 12-inch timbers and stiffened on both sides with a king post and king-post cables. The leads are standard or expedient. Figure 3-12 shows expedient leads, 66 feet high made of

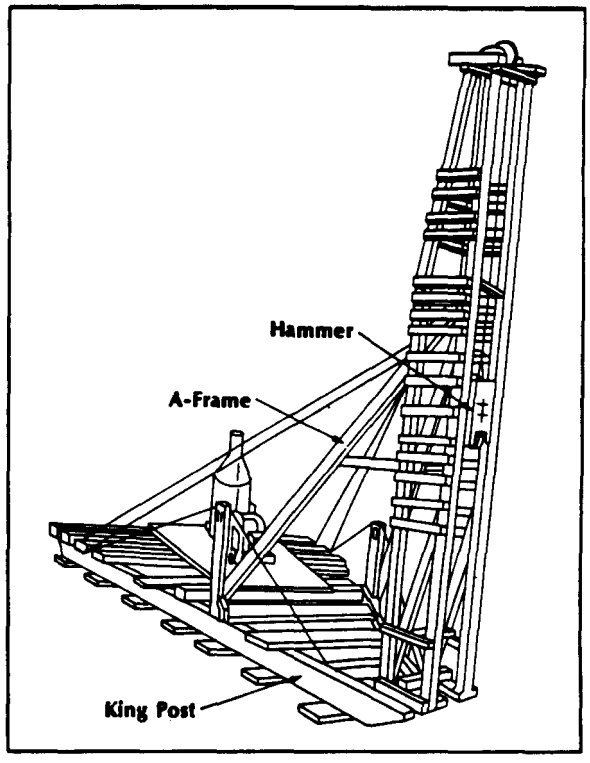

Figure 3-12 Expedient wood-frame, skid-mounted pile driver

timber with the bearing surfaces faced with steel plates to reduce wear and friction. The fixed leads are supported by guys run to the rear of the frame and by an A-frame from the midpoint of the leads to the midpoint of the frame. The rig can be skidded into place using a 2-drum winch. The rig is anchored, using natural anchors in the vicinity of the site. Any pile-driver hammers discussed in paragraph 3-4 can be used.

b. Timber pile driver. Figure 3-13 shows a rig with a 12-inch x 12-inch timber base and an A-frame using a section of standard leads. Cross braces are 3-inch x 12-inch members. The leads must be securely fastened to the tip of the A-frame and guyed at the base. Another design, using smaller dimensioned lumber, is shown in figure 3-14.

c. Tripod pile driver. Figure 3-15 shows a hand-operated rig constructed of local

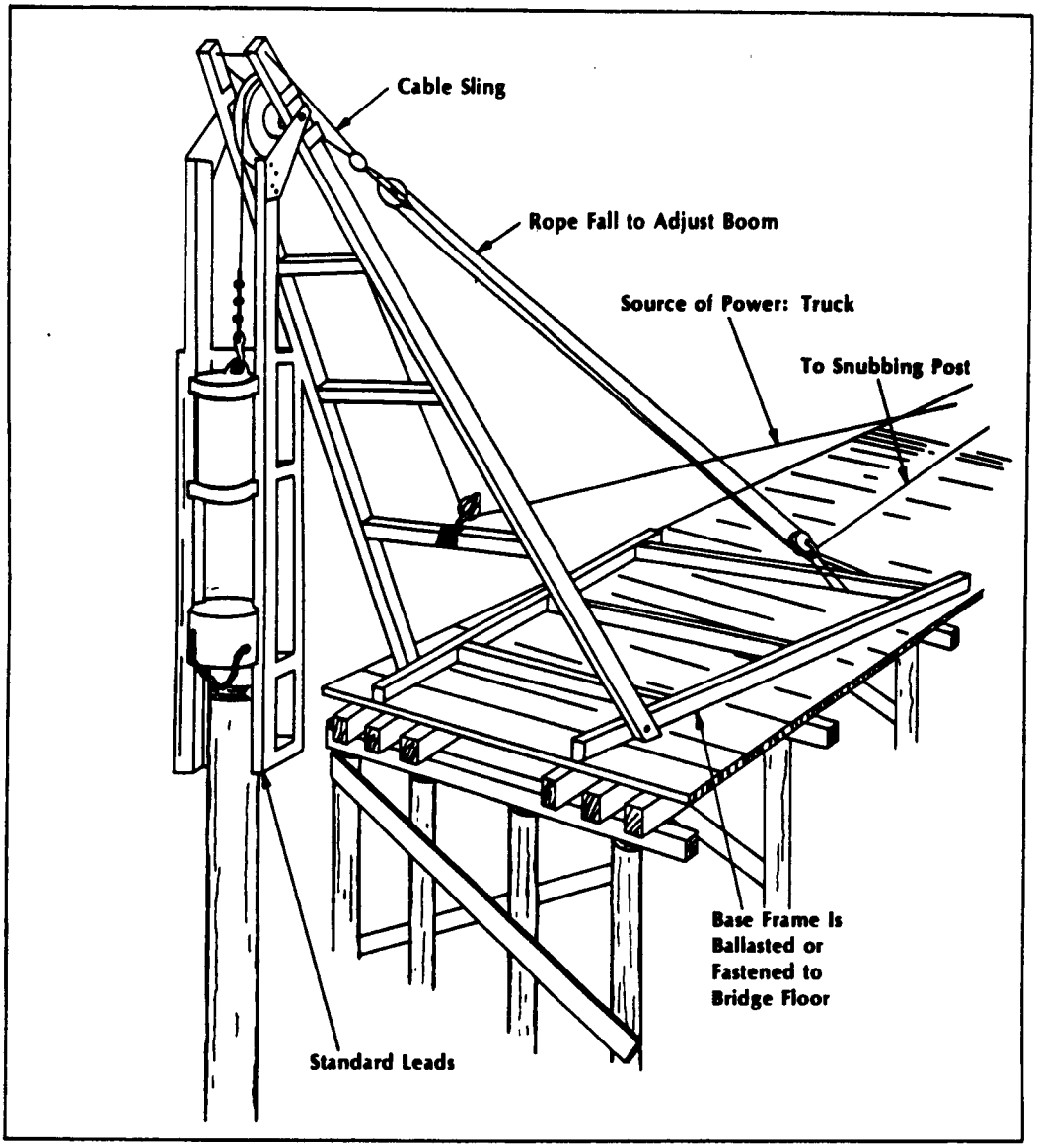

Figure 3-13. Expedient wood-frame, skid mounted pile driver using standard leads

materials. The hammer, guide rod, blocks, and line (rope) are the only equipment that must be transported. This rig is particularly well adapted for jungle operations where the transportation of heavy equipment is difficult. The rig will handle short lengths of piling up to 8 inches in diameter. Figure 3-16 shows the design features of the pile driver. The spars are 8 to 10 inches in diameter and are lashed with ½-inch line. The base frame must be ballasted while driving piles. A log hammer (figure 3-6) can be used to drive the piles. The rig is built of hardwood and has a steel baseplate to protect the driving end. The guide-rod hole and the guide rod must be well greased to prevent binding when the hammer falls. The base of the guide rod is positioned by drilling a ¾-inch hole 6 to 8 inches deep in

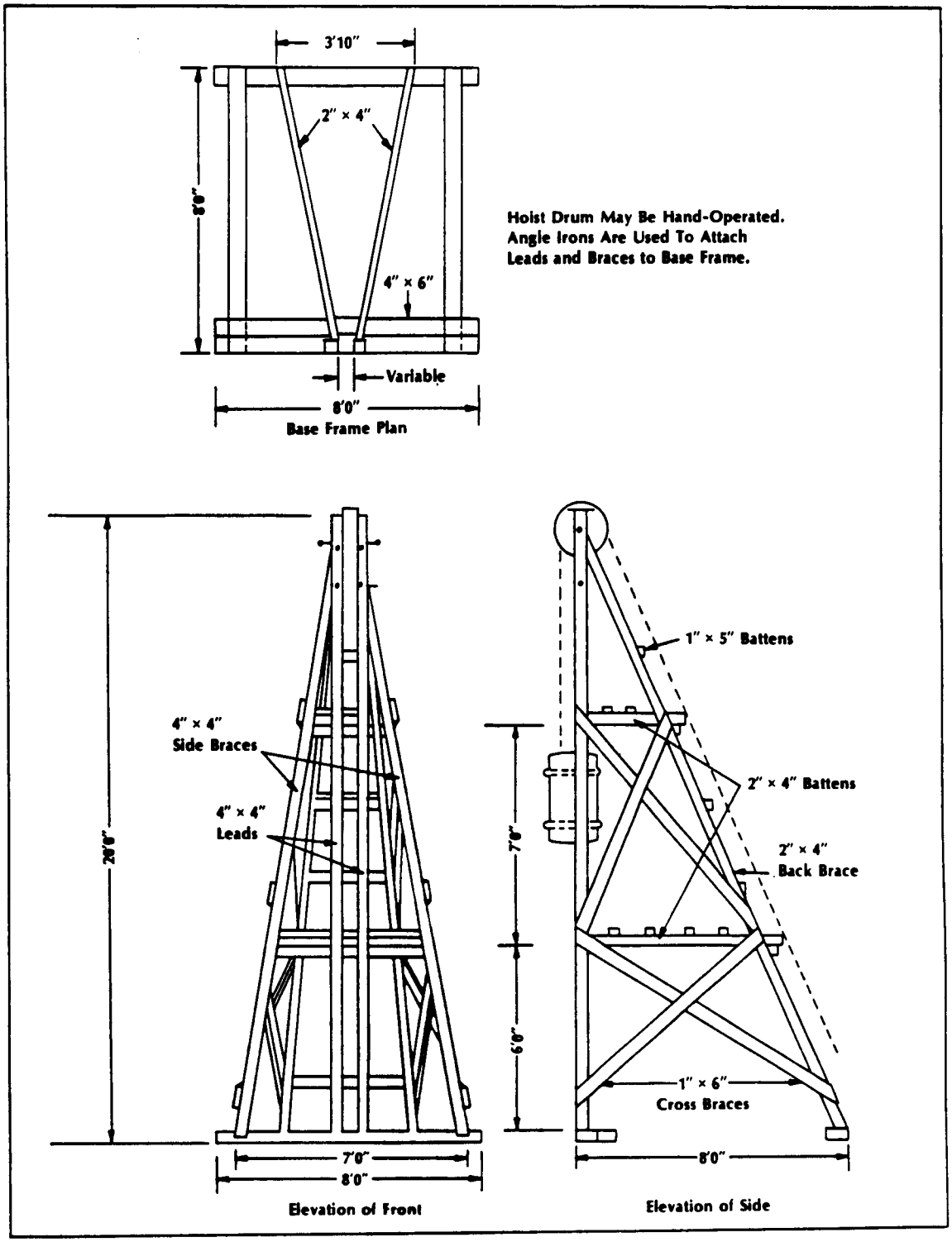

Figure 3-14 Expedient timber pile-driving rig using dimensioned lumber

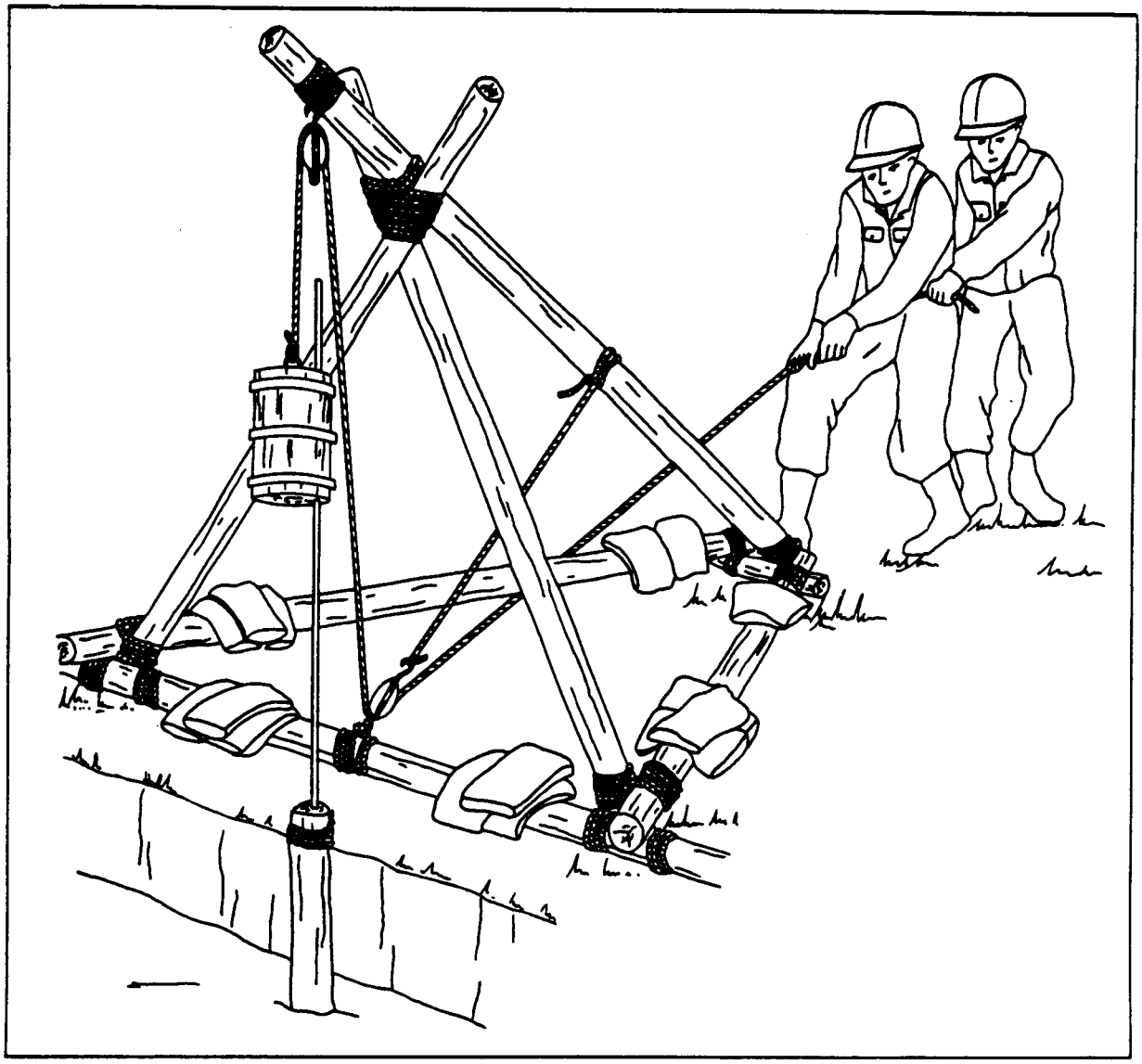

Figure 3-15 Expedient tripod pile driver

the head of the pile. Guying the pile helps position the guide rod.

d. Welded-angle construction pile driver. A piledriving rig can be built using four heavy steel angles as leads and a laminated steel plate cap of welded and bolted construction. The leads should be heavily braced and guyed (figure 3-17). The hammer can be operated by the rear wheels of any four-wheel-drive truck ***or*** the front wheels of any front-wheel-drive truck.

3-10. Power for expedient pile drivers.

To raise the pile into position and operate the hammer in driving the pile, power is required. When available, the power unit for a standard skid-mounted pile driver should be used. In

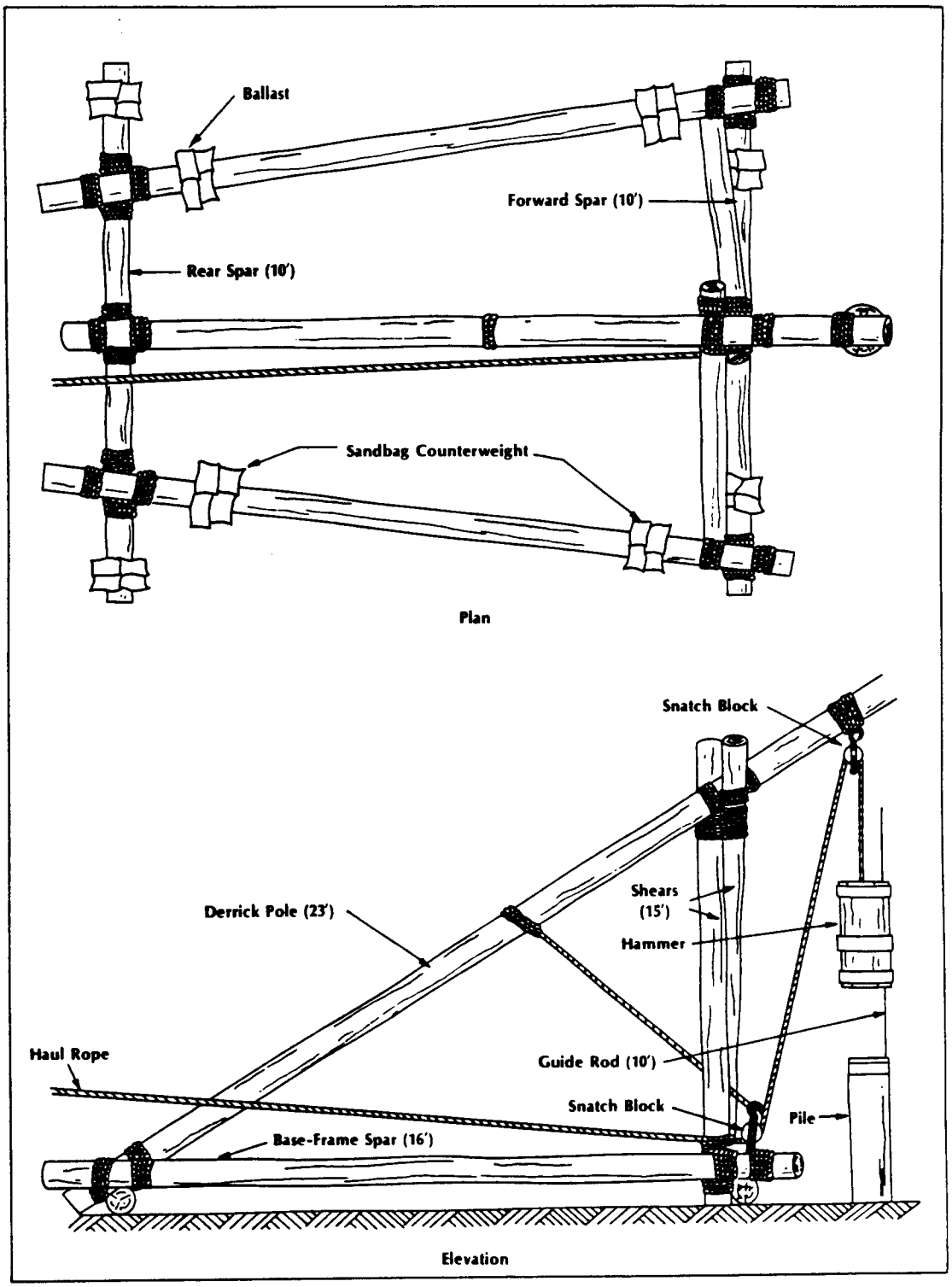

Figure 3-16 Design features of the tripod pile driver

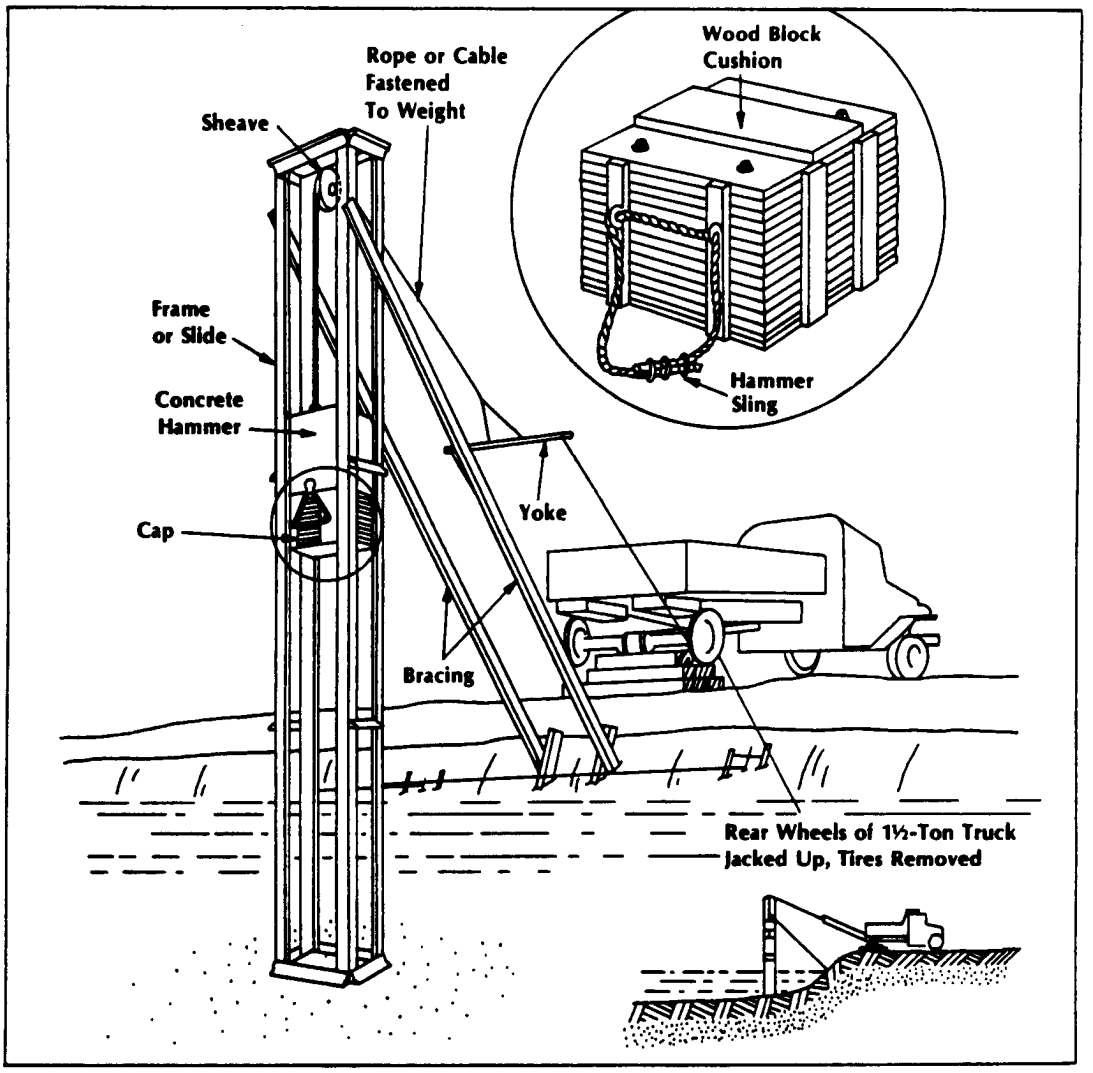

Figure 3-17 Expedient pile driver made of constructed welded steel angles

other cases a truck, truck motor, or manpower can be used.

a. Truck. The hammer line can be snubbed to a truck bumper and the truck backed away until the hammer is raised. The line is then freed allowing the hammer to fall (figure 3-13). The wheels of a truck can be jacked and used as hoist drums (figure 3-17). The truck winch should not be used except in emergencies since heavy use will cause excessive wear to the winch motor.

b. Truck motor. A truck motor can be mounted on the base frame of the rig. A drum is mounted on the drive shaft and controlled by the clutch. The hammer line is attached to the drum.

c. Manpower. Hammers weighing up to 1,200 pounds can be operated by 15-person crews if there is sufficient pulling distance at the site. Normally, a soldier hauling a line can pull 50 to 80 pounds. When steel hammers

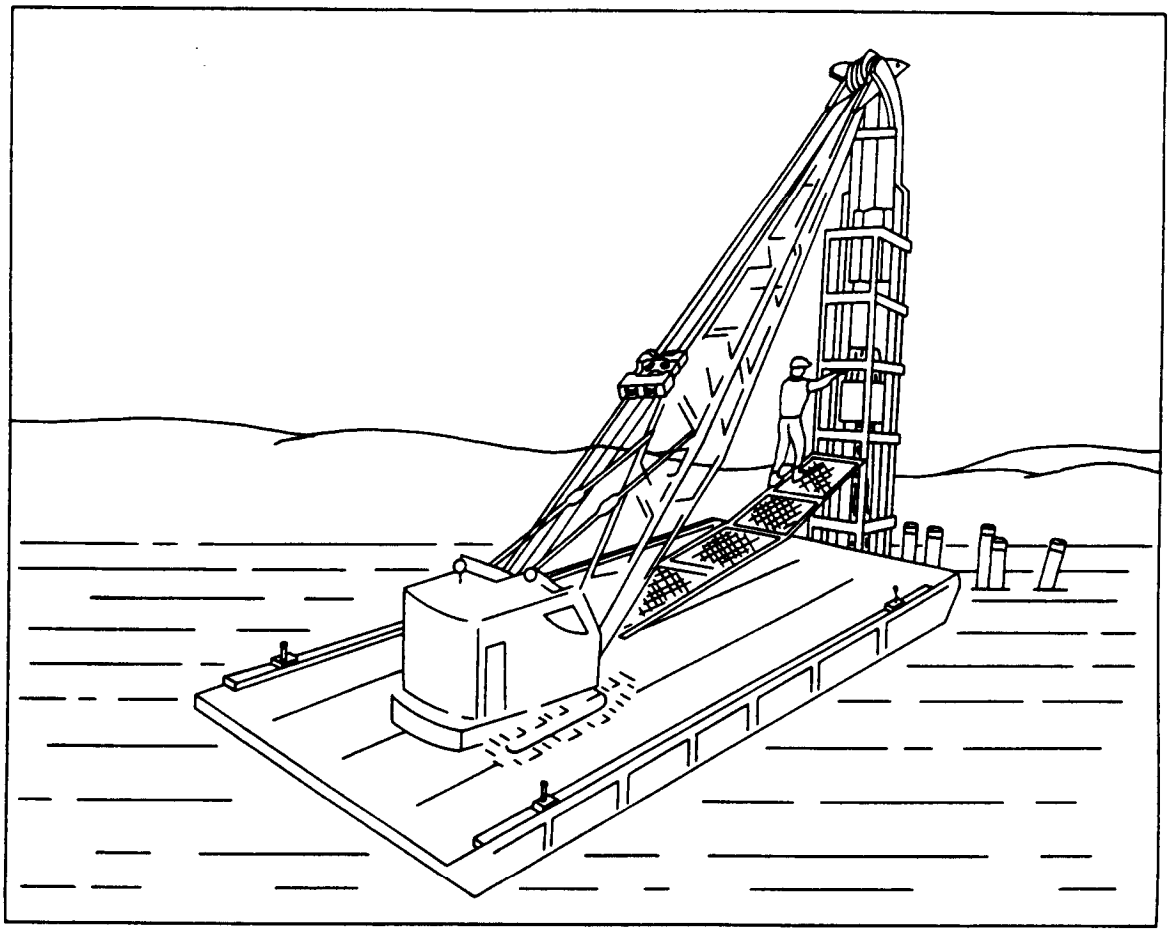

Figure 3-18 Crane-shovel with pile-driving attachment

are fabricated in laminated sections, they are easier to hand-carry over difficult terrain.

3-11. Floating pile drivers.

a. Floating cranes. Barge-mounted cranes can be adapted for pile-driving operating by using boom-point adapters and pile-driving attachments. If standard leads are not available, they should be improvised from dimensioned lumber faced with steel plate and adequately braced. For pile driving, a floating crane may be maneuvered with its own lead lines, and spuds put down before driving begins.

b. Barges or rafts. Crane-shovel units or skid-mounted pile drivers may be mounted on barges or rafts for work afloat. Driving may be off the end or side of the raft, depending on problems of current and maneuverability. Sandbags can counterbalance a raft to enable the pile driver to be positioned close to the end of the raft to extend its reach. A standard 4-foot x 7-foot barge assembly is adequate to support a pile driver adapted from a 12 ½-ton crane (figure 3-18). A pile driver adapted from a skid-mounted pile driver can be mounted on a 5-foot x 12-foot barge assembly (figure 3-19).

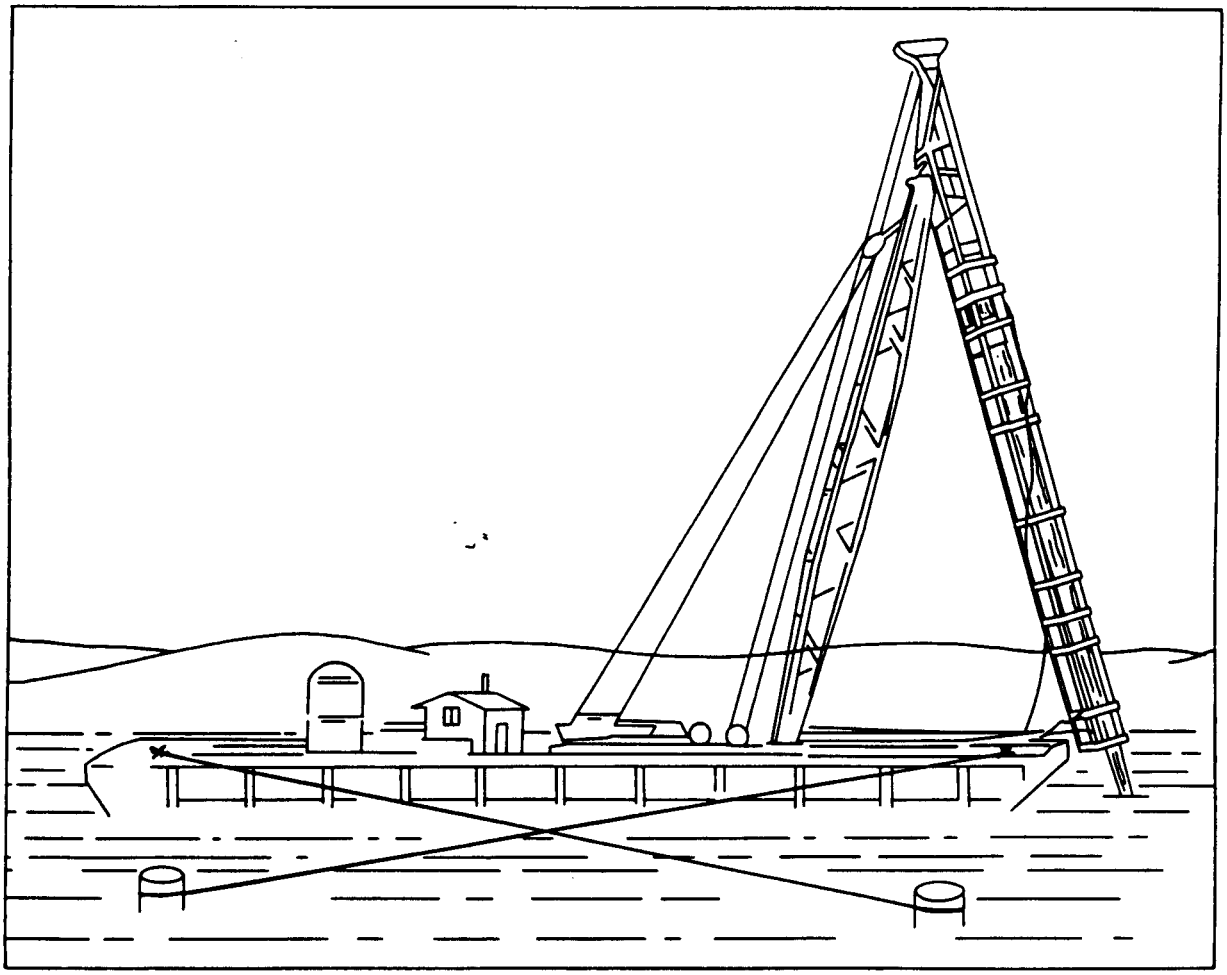

Figure 3-19. Skid-mounted pile driver on a 5-foot x 12-foot barge assembly

c. Pneumatic floats. Cranes or skid-mounted pile drivers may be mounted on rafts assembled from pneumatic floats which serve as platforms. Driving off the end or side of the float using counterbalances (such as sandbags) applies to this type of rig.

d. Anchoring of rafts. The raft must be held securely to position the pile accurately and to hold the leads and hammer in line with the pile during driving. For the first pile of an isolated off-shore structure, such as a dolphin, two transverse lines on capstans at bow and stern and one longitudinal line on a deck capstan will hold the craft if the floating rig is not furnished with spuds. The first pile driven may be used as one of the anchors. It is possible to run the steadying lines from anchorages onshore. More control of the raft can be obtained if the lines are run like spring lines from a berthed ship, so that they cross each other diagonally.

Section III. OTHER PILE-DRIVING EQUIPMENT

3-12. Accessory equipment.

a. Support equipment. Equipment must be available for handling stockpiled piling and

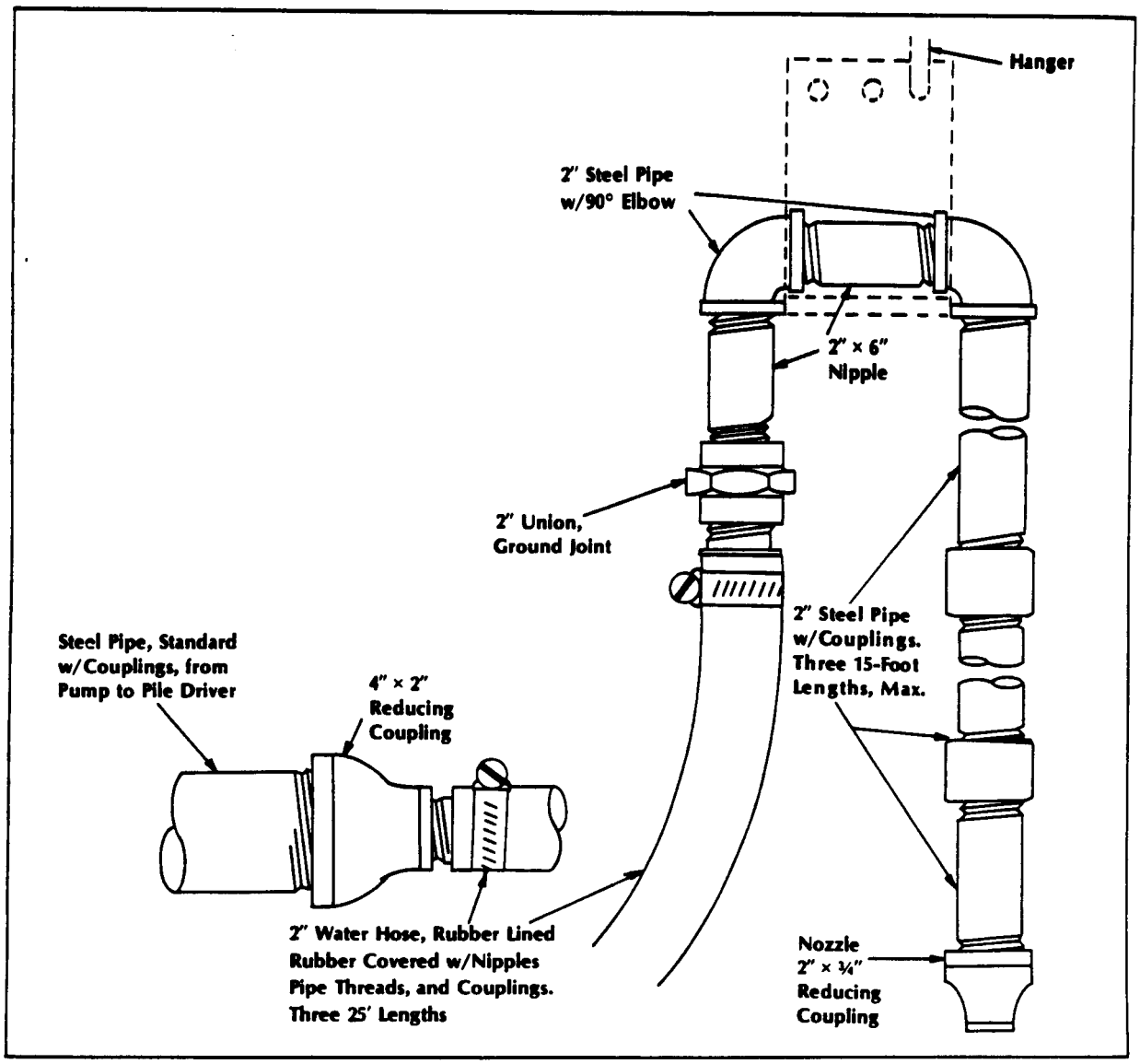

Figure 3-20 Jet pipe assembly

for straightening, cutting, splicing, capping, and bracing piles.

b. Jetting equipment. Jetting is a method of forcing water around and under a pile to loosen and displace the surrounding soils. Jetting operations are discussed in chapter 4, section II. The equipment consists of steel pipes, pipe fittings, water hoses, and couplings. The pipes and fittings are made into a jetting assembly, and the water hoses and couplings are used to connect the jetting assembly to a water pump (figure 3-20).

(1) ***Jetting pipes.*** Jetting pipes are usually from 2½ to 3½ inches in diameter. The pipes are reduced to about half their

diameter to form nozzles at the point of discharge.

(2) ***Jetting pump.*** The jetting pump must be capable of delivering 500 gallons per minute (gpm) at a pressure of 150 to 200 pounds per square inch (psi). Gasoline or diesel-powered centrifugal pumps having from two to four stages and developing from 100 to 300 psi are normally used. For use in gravelly soils, water pressure should range from 100 to 150 psi. For sands, water pressure from 50 to 60 psi is generally adequate.

(3) ***Jetting sizes.*** Jet sizes are normally 2 ½ inches for 250 gpm, 3 inches for 250 to 500 gpm, and 3 ½ inches for 500 to 750 gpm.

(4) ***Jetting with air.*** Air may be used for jetting either alone or with water. Air compressors are required.

c. Sleeve. A sleeve is a 4-foot section of steel pipe bolted to the jaws of the hammer to hold the pile in place for driving when leads cannot be used. A three-point suspension keeps the hammer fixed at the desired angle when driving batter piles (figure 3-21, 1).

d. Pants. Pants consist of parallel plates bolted to the hammer body. These fit over the top of sheet piling that is being driven without the use of leads and serve to guide the hammer (figure 3-21, 2).

3-13. Equipment selection.

In military pile construction, little opportunity exists for selecting the equipment used in a given operation. Reduction in standard military equipment items available from the table of organization and equipment (TOE) and class IV equipment has simplified this problem. When selection is possible, consider the following factors.

a. Ground conditions. Stable soil con. ditions permit the use of truck-mounted cranes, while boggy areas require crawler-mounted units.

b. Piles. The number, size, and length of piles affect the choice of equipment. Diesel, air, or steam hammers are used to drive batter piles. Long piles require a large rig with long leads. It is better to drive a long pile as a continuous section than to drive short sections since alignment is controlled.

c. Hammers. Selection of the type and size of hammer will depend on availability, the type of pile, and the anticipated loadings.

- For air and steam hammers (single acting or double-acting) the ratio of ram weight to pile weight should fall between 1:1 and 1:2. For diesel hammers, the ratio should fall between 1:1 and 1:4.

- All types of air, steam, and diesel hammers can be used to drive timber piles provided they have energy ratings between 15,000 and 20,000 foot-pounds. Hammers with a rated energy up to 26,000 foot-pounds can be used for timber piles with butt diameters of 15 inches or more. Specific guidance for selecting the size of diesel hammers is provided in table 3-1.

- Except for diesel hammers, the size of the hammer selected should be one in which the desired energy is developed by heavy rams striking at low velocity. A high velocity impact wastes a large amount of the striking energy. It also deforms the pile head leaving less energy available for the useful purpose of driving a pile.

- The energy of a diesel hammer is developed by a combination of the falling of the ram, compression of the air in the combustion chamber, and the firing of the diesel fuel. This combination eliminates

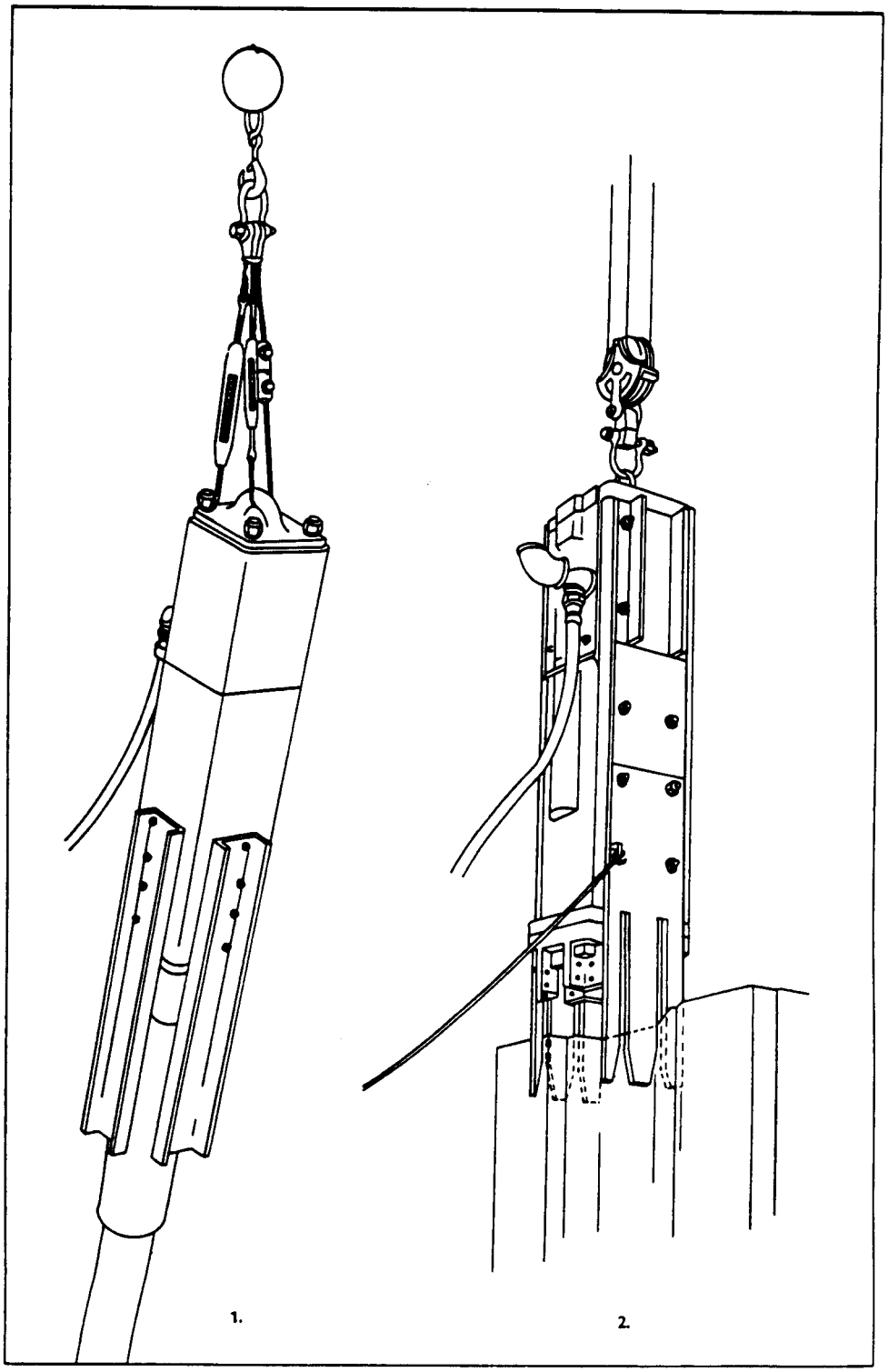

Figure 3-21 Improvised devices for aligning hammers without leads

the need for a heavy ram at a low velocity and depends only on sufficient energy to properly move the pile.

- With air or steam hammers, a double-acting or differential-acting hammer is preferred when piles must be driven to considerable depth where penetration per blow is small. The greater frequency of blows give faster penetration.

- The simple-acting hammer can be used where the soil above the bearing stratum can be penetrated rapidly under easy driving conditions.

- For driving precast concrete piles, a heavy ram with low impact velocity is recommended. When driving is easy, hammer blows should be minimized until resistance develops. This may avoid stress waves that might cause cracking.

3-14. Equipment assembly.

Skill and caution are required in the erection of pile-driving equipment. Assembly information is not within the scope of this manual. For comprehensive assembly instructions, consult the operator's manual for the pile-driving equipment to be used.

CHAPTER 4

PILE INSTALLATION OPERATIONS

Section I. PREPARATION OF PILES FOR DRIVING

4-1. Preparation of timber piles.

Timber piles selected for a structure should be long enough so that the butts are 2 or 3 feet higher than the finished elevation after the piles are driven to the desired penetration. (Methods of predetermining pile lengths are described in chapter 5.) Timber piles require little preparation or special handling; however, they are susceptible to damage during driving, particularly under hard driving conditions. To protect the pile against damage, the following precautions should be taken.

a. Fresh heading. When hard driving is expected, the pile should be fresh headed by removing 2 to 6 inches of the butt. Removing a short end section allows the hammer to transmit energy more readily to the lower sections of the piles. Butts of piles that have been fresh headed should be field treated with creosote and coal tar pitch (chapter 8), after the pile has been driven to the desired penetration.

b. Fitting. Proper fit between the butt of the pile and the driving cap of the hammer is the most important factor in protecting the pile from damage during hard driving. The butt of the pile must be square cut, shaped to fit the contour of the driving cap, and a little larger than the dimensions of the cap so the wood will be compressed into the driving cap. Under most driving conditions the tip of a timber pile should be left square without pointing. The following points should be kept in mind when fitting timber piles.

- Pointing timber piles does little to increase the rate of penetration.
- Piles with square tips are more easily kept in line during driving and provide better end bearing.
- For very hard driving, steel shoes protect the tips of piles (figure 4-1, 1). Steel plates nailed to blunt tips (figure 4-1, 2) offer excellent protection.

c. Wrapping. If a driving cap is not used, or if crushing or splitting of the pile occurs, the top end of the pile should be wrapped tightly with 12-gage steel wire to forma 4-inch band. The steel wire should be stapled firmly in

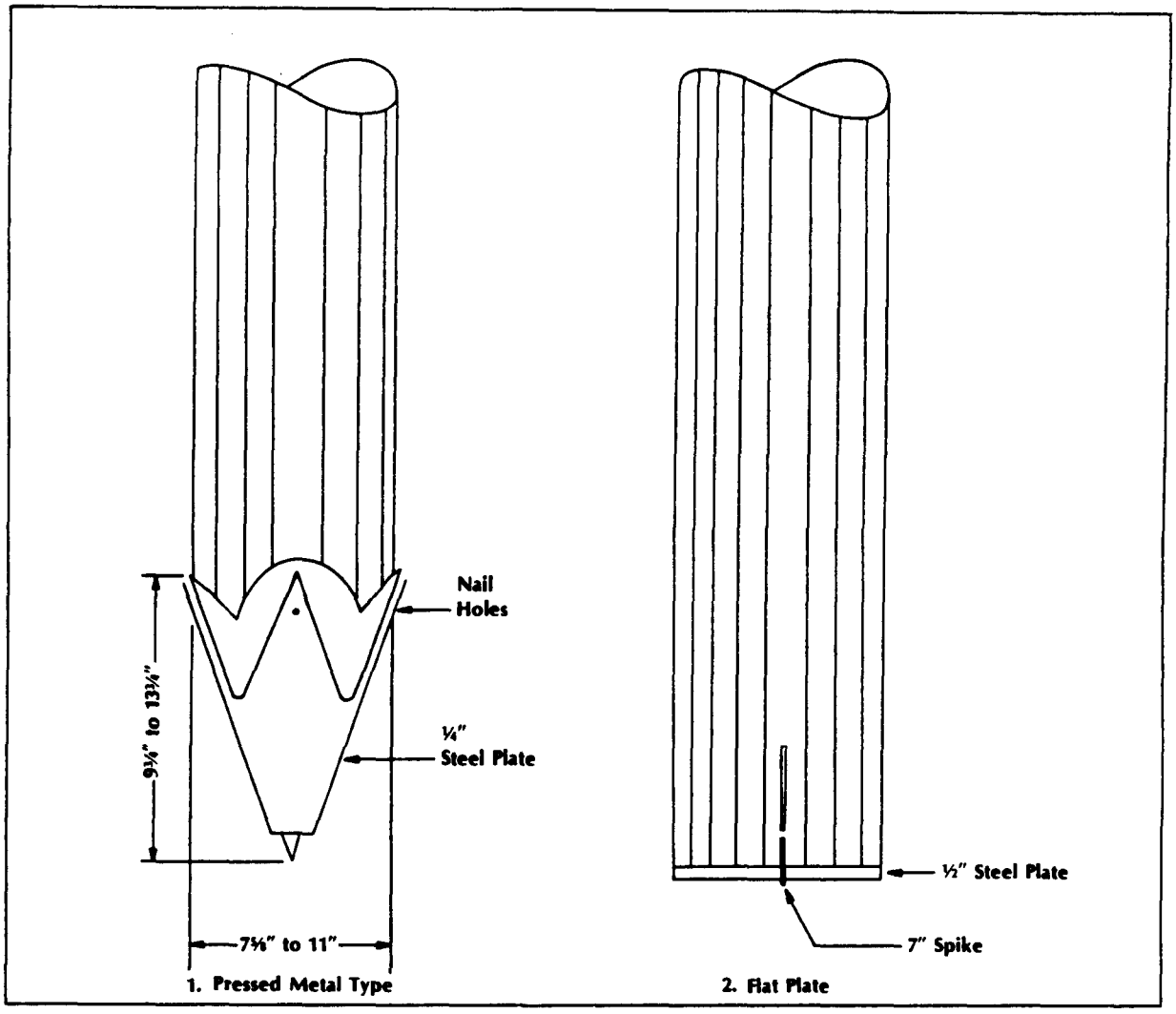

Figure 4-1 Steel shoes for timber piles

place. This is a simple method of protecting pile butte during hard driving. Steel strapping about 1¼ inches wide will also provide adequate protection. Strapping should encircle the pile twice, be tensioned as tightly as possible, and be located approximately two feet from the butt.

d. Splicing. Piles can be spliced if single sections of the required length are not available or if long sections cannot be handled by available pile drivers. Generally, decreasing pile spacing or increasing the number of piles is preferable to splicing. Except in very soft soils or in water, the diameter of the complete splice should not be greater than the diameter of the pile (figure 4-2). The ends of the piles must be squared, and the diameter trimmed to fit snugly in the 8-inch or 10-inch steel pipe. Steel splice plates are also used (figure 4-2).

e. Lagging. Lagging a friction pile with steel or timber plates, planks, or rope wrapping

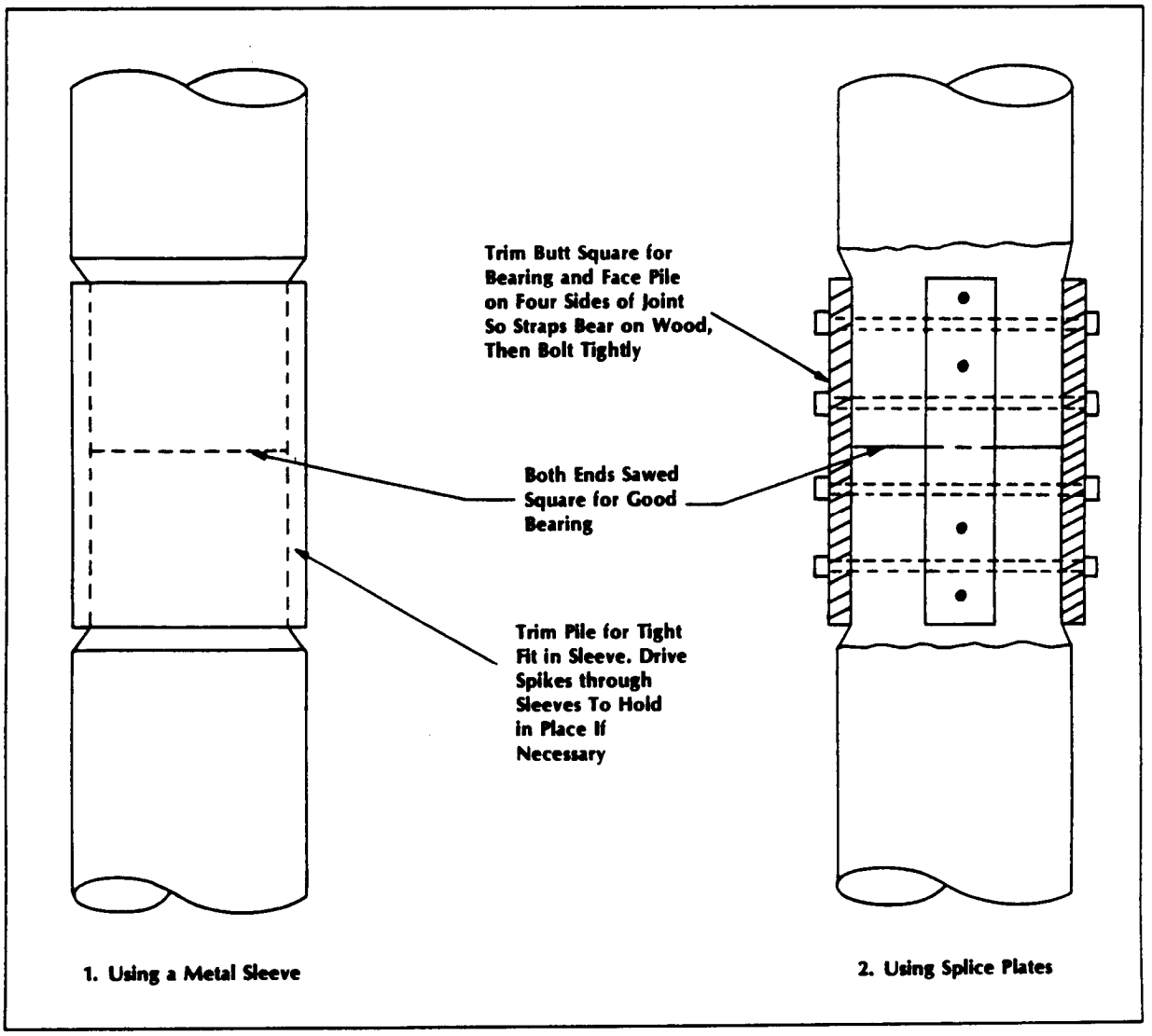

Figure 4-2 Methods of splicing timber piles

can be used to increase the pile's load-carrying capabilities.

4-2. Preparation of steel piles.

a. Reinforcing. Point reinforcement is seldom needed for H-piles; however, if driving is hard and the overburden contains obstructions, boulders, or coarse gravels, the flanges are likely to be damaged and the piles may twist or bend. In such cases H-piles (figure 4-3) and pipe piles (figure 4-4) should be reinforced.

b. Cleaning. Pipe piles driven open-ended, must be cleaned out before they are filled with concrete. Ordinarily they are closed at the lower end, usually with a flat plate (figure 4-4). In a few soils, such as stiff plastic clays, the overhang of the plate should be

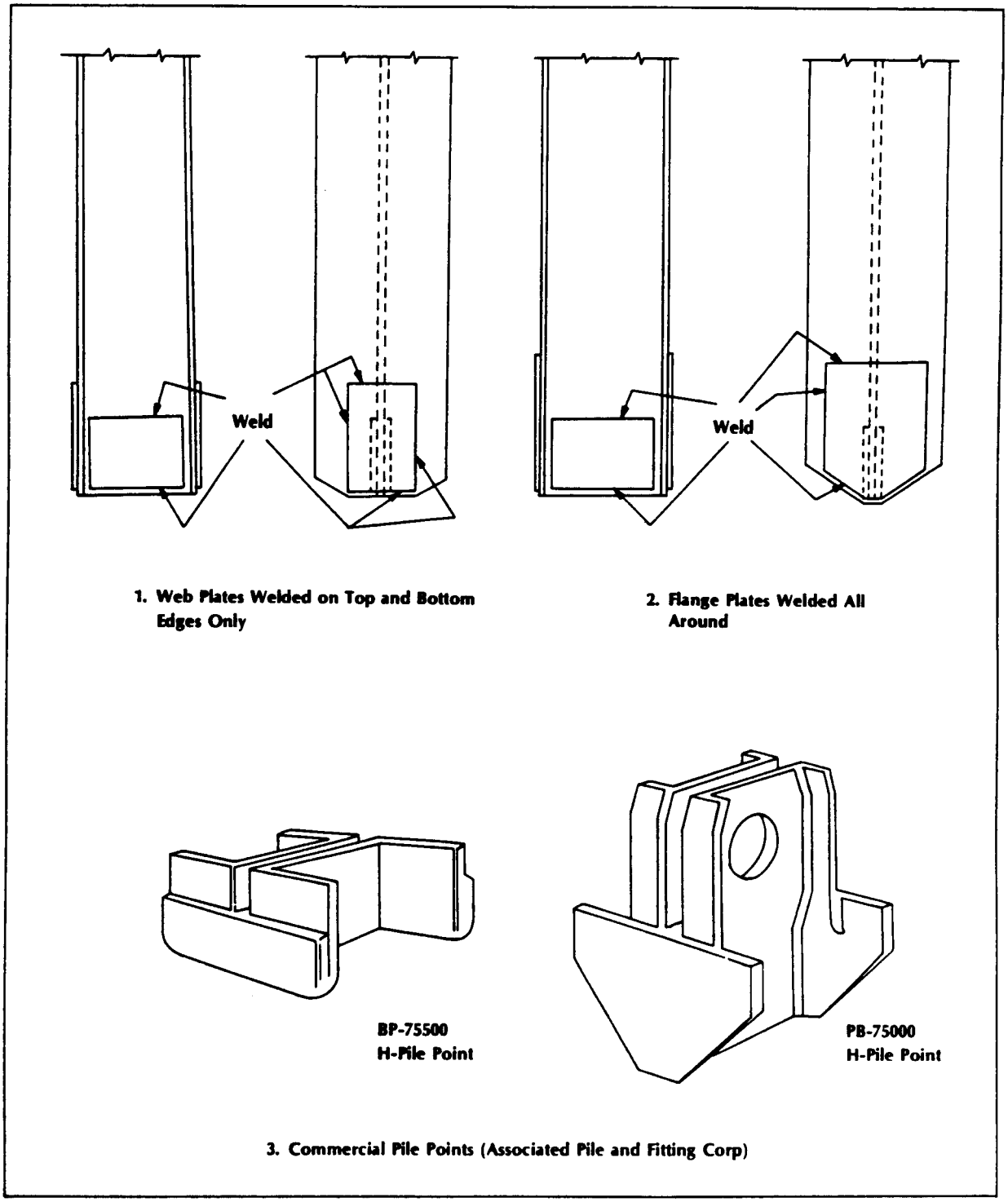

Figure 4-3 Driving points for H-piles

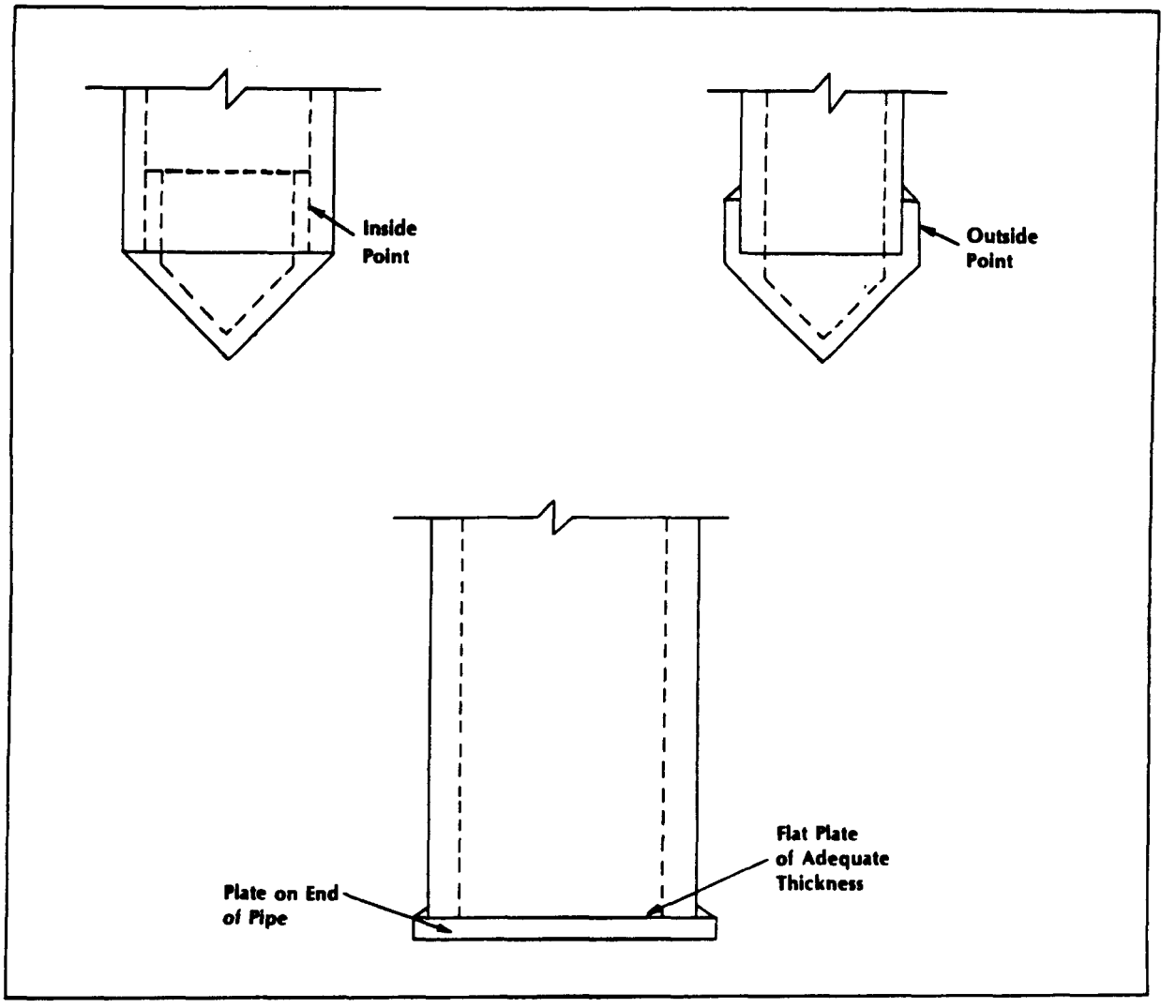

Figure 4-4 Driving points for pipe piles

eliminated. Such pipe piles can be inspected after driving. Damaged piles should be identified and rejected if not repairable.

c. Splicing. H-piles can be spliced and designed to develop the full strength of the pile both in bearing and bending. This is done most economically with butt-welded splices (figure 4-5). This method requires that the pile be turned over several times during the welding operation. Various types of plate and sleeve splices can be used (figure 4-6). Splicing is often performed before the piles are placed in the leads so pile-driving operations are not delayed.

d. Lagging. Lagging is of questionable value and if attached near the bottom of the pile, will actually reduce the capacity of the pile.

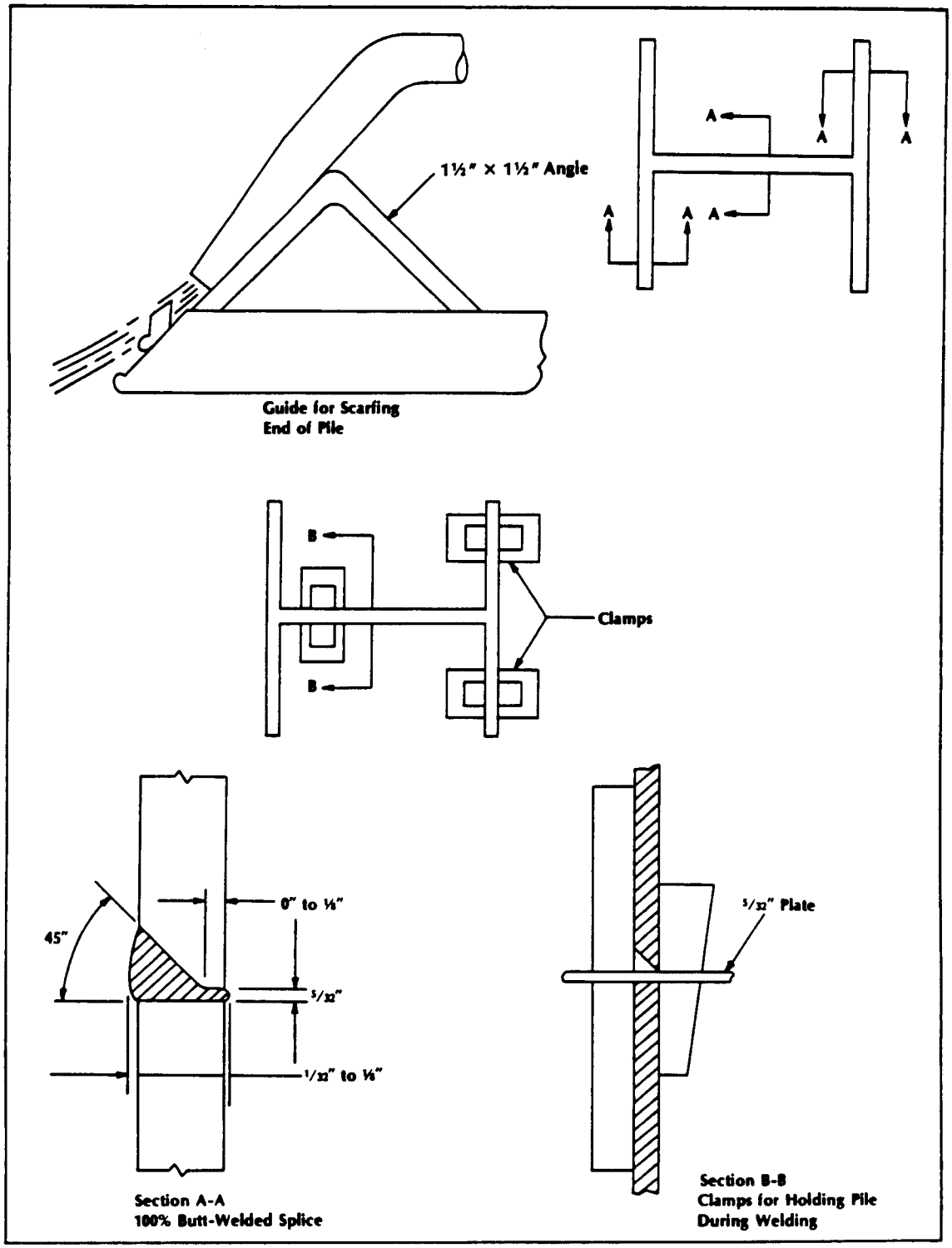

Figure 4-5 Butt-welded splice, welding clamps, and guide for scarfing

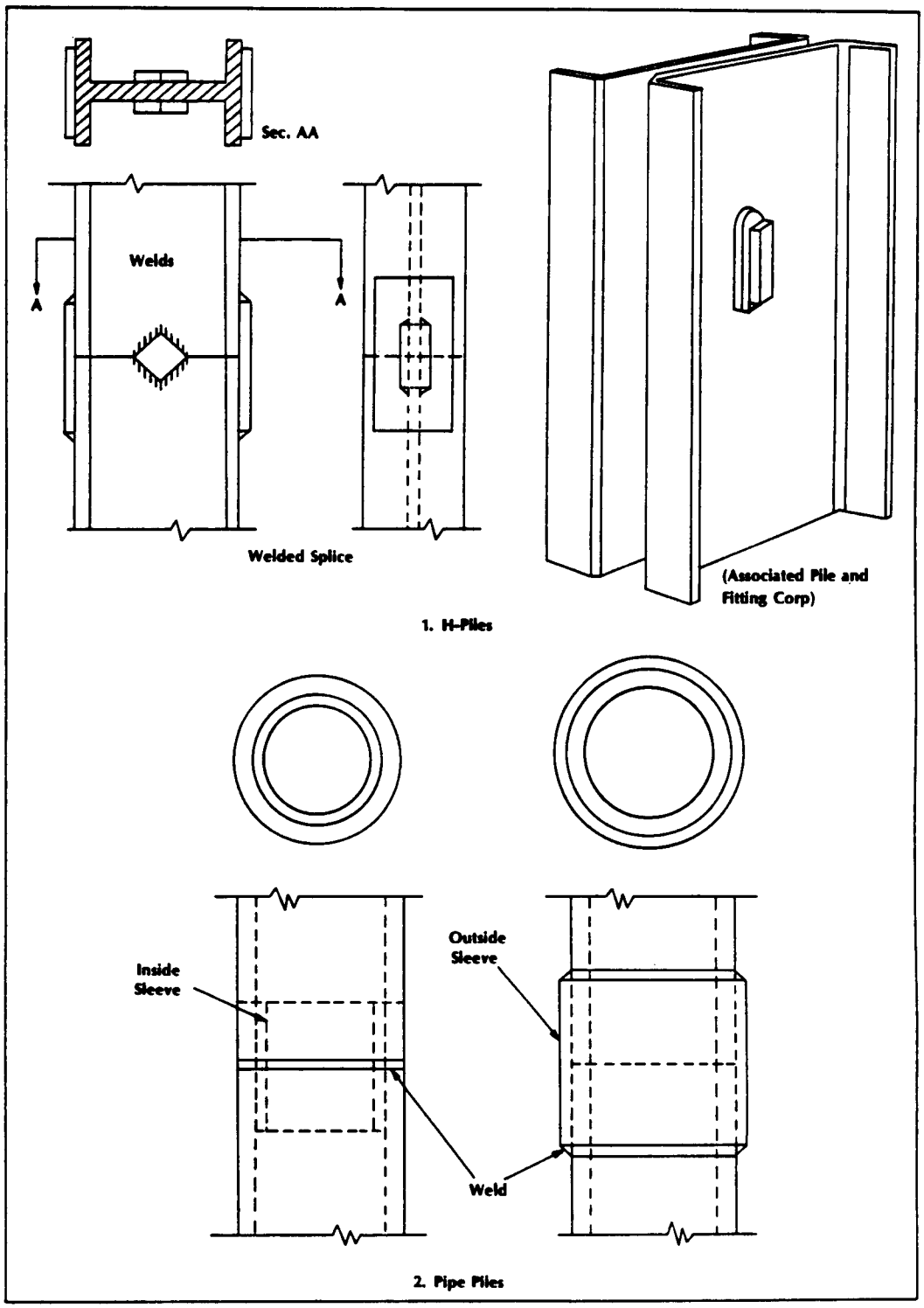

Figure 4-6 Splices of H-piles and pipe piles

4-3. Preparation of concrete piles.

Precast concrete piles should be straight and not cambered by uneven prestress or poor concrete placement during casting.

a. Reinforcing. Reinforcing of precast concrete piles is done in the manufacturing. The top of the pile must be square or perpendicular to the longitudinal axis of the pile. The ends of prestressing or reinforcing steel should be cut flush with the end of the pile head to prevent direct loading by the ram stroke. Poured concrete piles may be reinforced with steel reinforcing rods.

b. Splicing or cutting. Precast concrete piles are seldom, if ever, spliced. If the driving length has been underestimated, the pile can be extended only with considerable difficulty. The piles are expensive to cut if the length has been over estimated. Poured concrete piles should not require splicing as length is predetermined in the planning stages.

Section II. CONSTRUCTION PROCEDURES

4-4. Positioning piles.

When piles are driven on land, for example a building foundation, the position of each pile must be carefully established, using available surveying equipment. A simple template can be constructed to insure proper positioning of the piles. Piles generally should not be driven more than three inches from their design location. Greater tolerances are allowed for piles driven in water and for batter piles.

4-6. General driving procedures.

Piles are set and driven in four basic steps (figure 4-7).

a. Positioning. The pile driver is brought into position with the hammer and cap at the top of the leads (figure 4-7, 1).

b. Lashing. Generally, the pile line is lashed about one third of the distance from the top of the pile, the pile is swung into the helmet, and the tip is positioned into the leads (figure 4-7, 2). A member of the handling crew can climb the leads and, using a tugline, help align the pile in the leads.

c. Centering. The pile is centered under the pile cap, and the pile cap and hammer are lowered to the top of the pile. If a drop hammer is used, the cap is unhooked from the hammer (figure 4-7, 3).

d. Driving. The hammer is raised and dropped to drive the pile (figure4-7, 4). Driving should be started slowly, raising the hammer only a few inches until the pile is firmly set. The height of fall is increased gradually to a maximum of 6 feet. Blows should be applied as rapidly as possible to keep the pile moving. Repeated long drops should be avoided since they tend to damage the top of the pile.

4-6. Driving requirements.

Careful watch must be kept during driving to avoid damage to the pile, pile hammer, or both. Precautions and danger signs include the following

a. Support. The pile driver must be securely supported, guyed, or otherwise fastened to prevent movement during driving.

b. Refusal. Refusal is reached when the energy of the hammer blow no longer causes penetration. At this point, the pile has reached rock or its required embedment in the bearing stratum. It is not always necessary to drive piles to refusal. Friction piles frequently must be driven only far enough to develop the desired load bearing capacity. In certain types of soils, such as a very soft organic soil or deep marsh deposit, a considerable length of pile may be necessary to develop adequate load capacity. Driving in such soils is frequently easy as piles may penetrate several

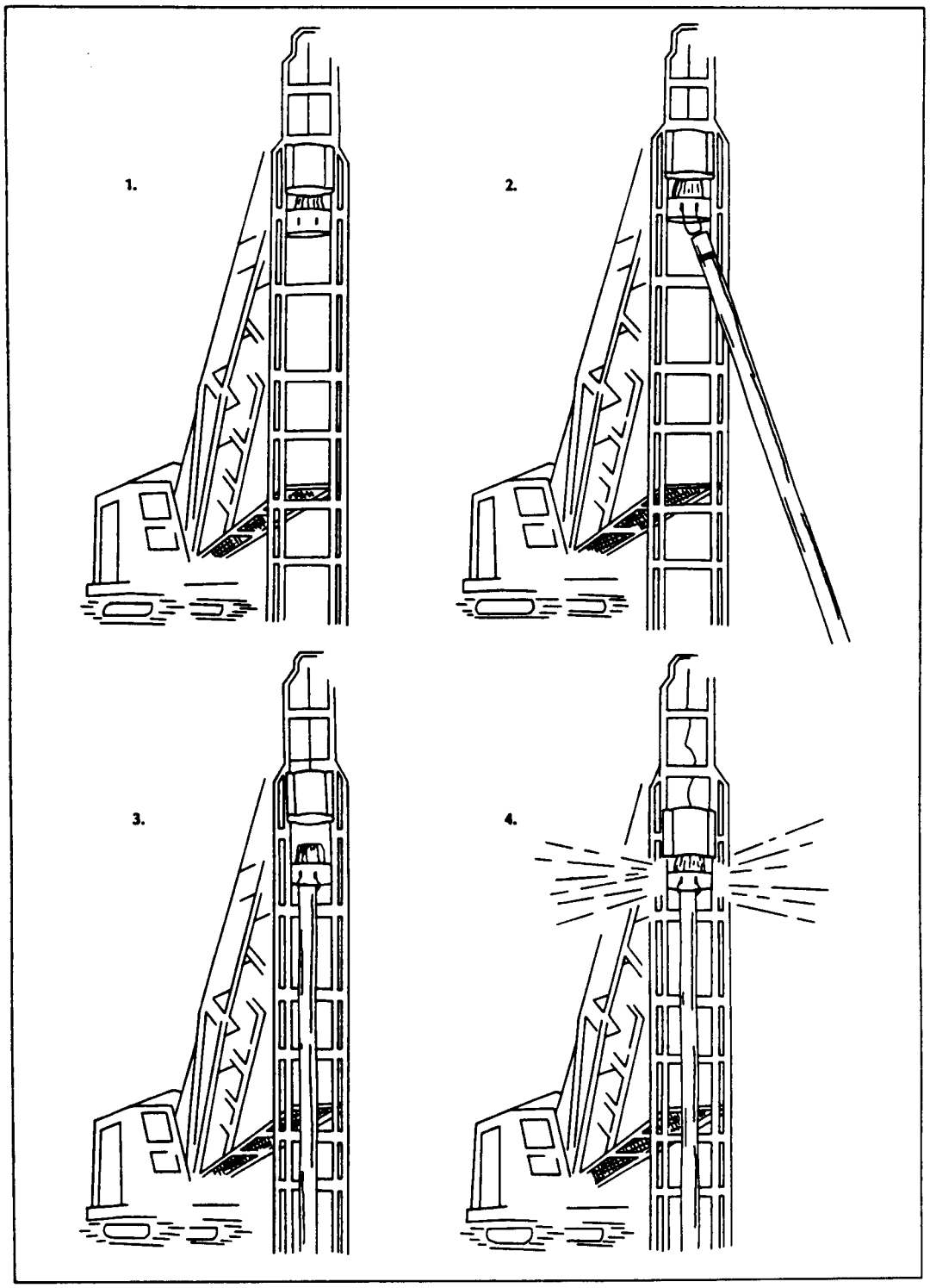

Figure 4-7 Basic steps in setting and driving piles

feet under a single hammer blow. It is important that driving be a continuous procedure. An interruption of even several minutes can cause a condition of temporary refusal in some types of soils, thus requiring many blows to get the pile moving again.

c. Timber piles. Timber piles are frequently overdriven when they are driven to end bearing on rock (figure 4-3). If the pile hits a firm stratum, depth may be checked by driving other piles nearby. If the piles stop at the same elevation, indications are that a firm stratum has been reached. Following are items to be watched for when driving timber piles.

(1) *Breaking or splitting below ground.* If the driving suddenly becomes easier, or if the pile suddenly changes direction, the pile has probably broken or split. Further driving is useless as bearing capacity is unreliable. Anew pile must be driven close to the broken one, or the broken one pulled and a new one driven in its place.

(2) Pile spring or hammer bounce. The pile may spring or the hammer may bounce when the hammer is too light. This usually occurs when the butt of the pile has been crushed or broomed, when the pile has met an obstruction, or when it has penetrated to a solid footing.

(3) *Double-acting hammer bounce.* When a double-acting hammer is being used, too much steam or air pressure may cause bouncing. When using a closed-ended diesel hammer, lifting of the hammer on the upstroke of the ram piston can cause bouncing. This is caused by too high a throttle setting or too small a hammer. Throttle controls should be backed off just enough to avoid this lifting action.

(4) *Crushed or broomed butt.* If the butt of a timber pile has been crushed or broomed for approximately 1 inch, it should be cut back to sound wood before driving is continued. There should be no more than three or four final blows per inch for timber piles driven with a diesel, steam, or air hammer. Further driving may fracture the pile or cause brooming.

d. Steel piles. In driving steel piles, particular care must be taken to see that the hammer strikes the top of the pile squarely, with the center of the hammer directly over the center of the pile. Watch for the following.

(1) *Slack lines.* A hammer suspended from a slack line may buckle the top section and require the pile be trimmed with a torch before driving can proceed. Driving caps (previously described) will prevent this type of damage to H-piles.

(2) *Alignment.* When a steel pile is driven with a flying hammer (free-swing hammer), the pile should be aligned with guys (figure 4-9). Hooks, shackles, or cable slings can be used to attach guy lines. A pile should be considered driven to refusal when five blows of an adequate hammer are required to produce a total penetration of ¼ inch or less.

e. Concrete piles. Required driving resistances for prestressed concrete piles are essentially the same as for steel piles. Driving stresses should be reduced to prevent pile damage. The ram velocity or stroke should be reduced during initial driving when soil resistance is low. Particular attention should be paid to the following.

(1) *Cap or helmet.* The pile-driving cap or helmet should fit loosely around the pile top so the pile may rotate slightly without binding within the driving head.

(2) *Cushioning.* An adequate cushioning material must be provided between the helmet or driving cap and the pile head.

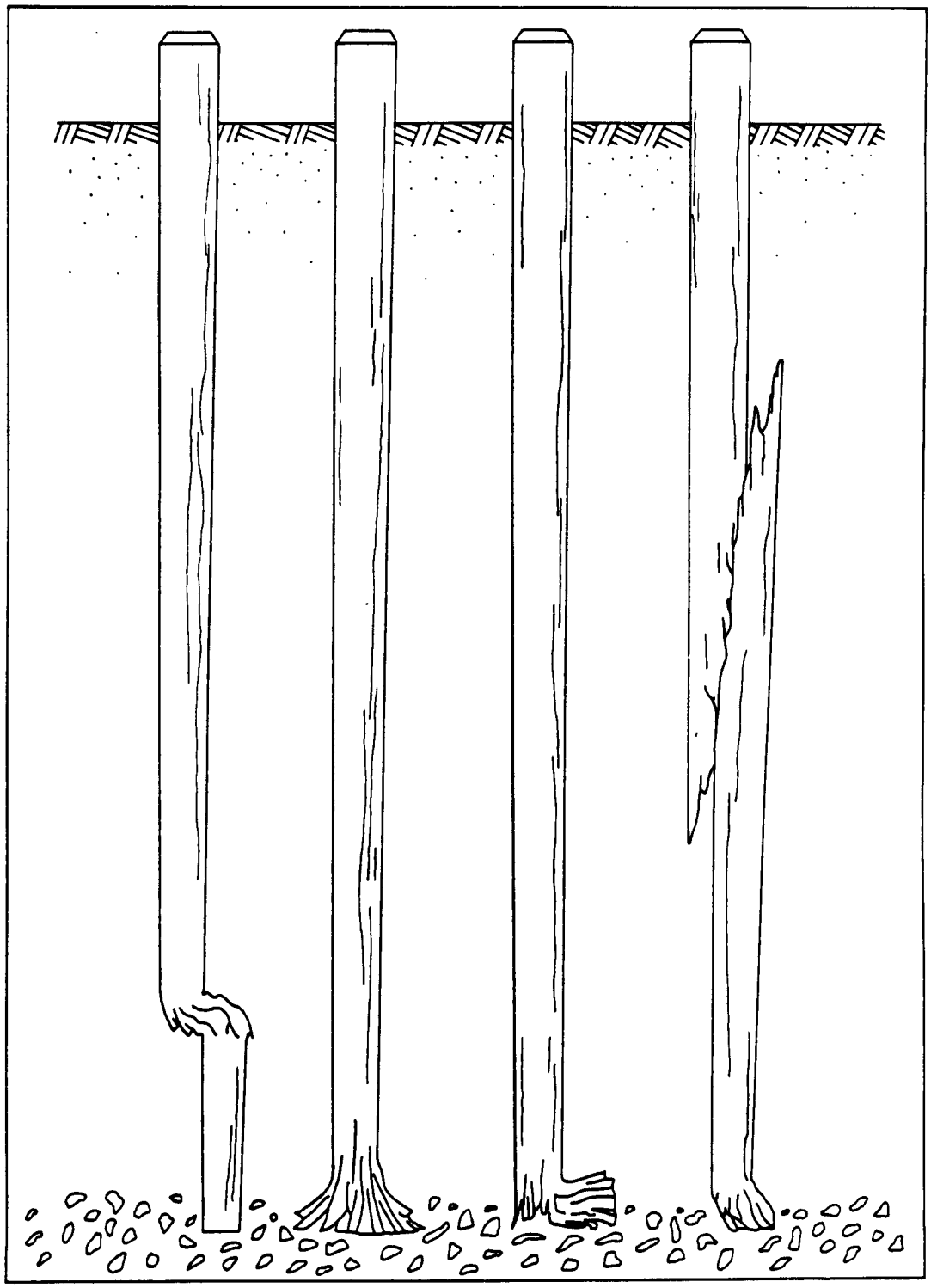

Figure 4-8 Types of damage to timber piles from overdriving

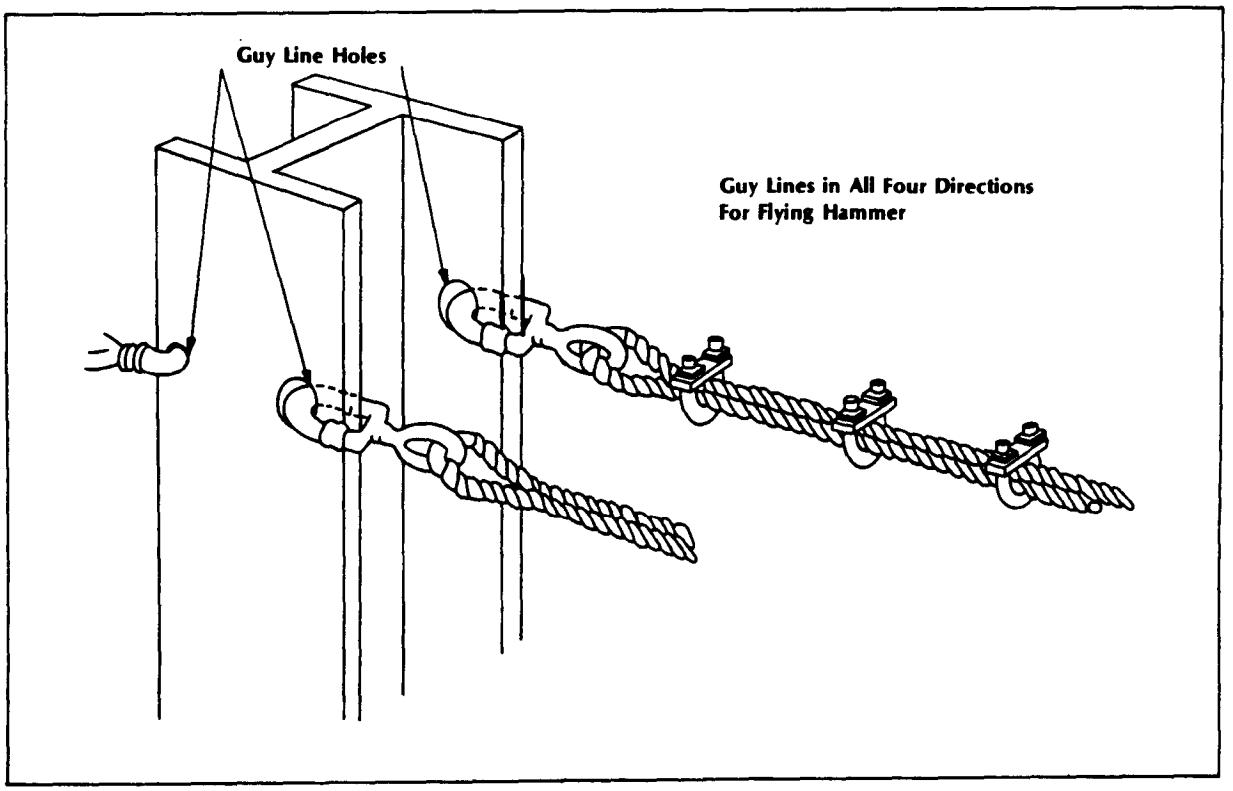

Figure 4-9 Method of guying steel piles

Three or four inches of wood cushioning material (green oak, gum, pine, or fir plywood) are adequate for piles less than 50 feet in length in a reasonably good bearing stratum. Cushions 6 inches thick or more may be required when driving longer piles in very soft soil. The cushion should be placed with the grain parallel to the end of the pile. When the cushion becomes highly compressed, charred, or burned, it should be replaced. If driving is hard, the cushion may have to be replaced several times during the driving of a single pile.

f. Special problems. Special problems may arise when driving various types of piles. A list of potential problems, with possible methods of treatment, is shown in table 4-1.

4-7. Aligning piles.

Piles should be straightened as soon as any misalignment is noticed during the driving. When vertical piles are driven using fixed leads, plumbing is not a matter of concern since the leads will hold the pile and correct the alignment. Vertical piles normally should not vary more than 2 percent from the plumb position.

a. Checking misalignment. Along mason's level is useful in plumbing the leads. For batter piles (figure 4-10) a plywood template can be used with the level. Exact positioning is easier if the driver is provided with a spotter or moon beam.

TABLE 4-1. TREATMENT OF FIELD PROBLEMS ENCOUNTERED DURING PILE DRIVING

Description of Problem	Procedures to Be Applied
Category:	
Obstructions: Old foundations, boulders, rubble, fill, cemented lenses.	Excavate or break up shallow obstruction if practical. For deeper obstructions use spudding, jetting, or temporary casings, or use drive shoes and reinforced tips when the pile is strong enough to be driven through obstructions.
General Problems:	
Vibration: Loose granular materials may compact and cause existing structures near piles to settle. Effect most pronounced in driving displacement piles.	Select pile type with minimum displacement and/or precore or jet with temporary casing or substitute jacking for pile driving.
Damage to Thin Shells: Driven shells may have been crimped, buckled, or torn. They may be leaking at joints as the result of driving difficulties or presence of obstructions.	Each pile is inspected with light beam. If diameter at any location varies more than 15% from original diameter or if other damage to shell cannot be repaired, pile is abandoned, filled with sand and a replacement is driven. Concrete shall be placed in dry shell only.
Inappropriate Use of Pile Driving Formula: Piles driven to a penetration determined solely by driving resistance may be bearing on a compressible stratum. This may occur in thick strata of silty fine sand, varved silts and clays, or medium stiff cohesive soils.	Unsuitable bearing strata should be determined by exploration program. Piles should not be permitted to stop in these strata, regardless of driving resistance. To determine bearing in stiff and brittle cohesive soils and in soft rock, load tests are particularly important.
Difficulties at Pile Tip:	
Fracturing of Bearing Materials: Fracturing of material immediately below tips of piles driven to required resistance as a result from driving adjacent piles. Brittle weathered rock, clay-shale, shale, siltstone, and sandstone are vulnerable materials. Swelling of stiff fissured clays of shales at pile tip may complicate this problem.	For piles bearing in these materials specify driving resistance test on selected piles after completion of driving adjacent piles. If damage to the bearing stratum is evidenced, require redriving until specified resistance is met.
Steeply Sloping Rock Surface: Tips of high capacity end bearing piles may slide or move laterally on a steeply sloping surface of sound hard rock which has little or no overlying weathered material.	Provide special shoes or pointed tips or use one end pipe pile socketed into sound rock.
Loss of Ground: Ground loss may occur during installation of open end pipe piles. Materials vulnerable to piping, particularly fine sands or silts, may flow into pipe under the influence of an outside differential head, causing settlement in surrounding areas or loss of ground beneath tips of adjacent piles.	Avoid cleaning in advance of pile cutting edge and/or retain sufficient material within pipe to prevent inflow of soil from below.
Movement of Piles Subsequent to Driving:	
Heave: Completed piles rise vertically as the result of driving adjacent piles. This is particularly common for displacement piles in soft clays and medium compact granular soils. Heave becomes serious in soft clays when volume displaced by piles exceeds 2½% of volume of soil enclosed within the limits of the pile foundation.	For piles of solid cross sections (timber, steel, precast concrete), survey top elevations during driving of adjacent piles to determine possible heave. For piles that have risen more than 0.005 foot redrive to at least the former tip elevation, and beyond that as necessary to reach required driving resistance. Heave is minimized by driving temporary open-end casing, precoring, or jetting so that total volume displaced by pile driving is less than 2 or 3% of total volume enclosed within limits of pile foundation.
Lateral Movement: Completed piles move horizontally as the result of driving adjacent piles.	Survey horizontal positions of completed piles while driving adjacent piles. Movement is controlled by procedures used to minimize heave.

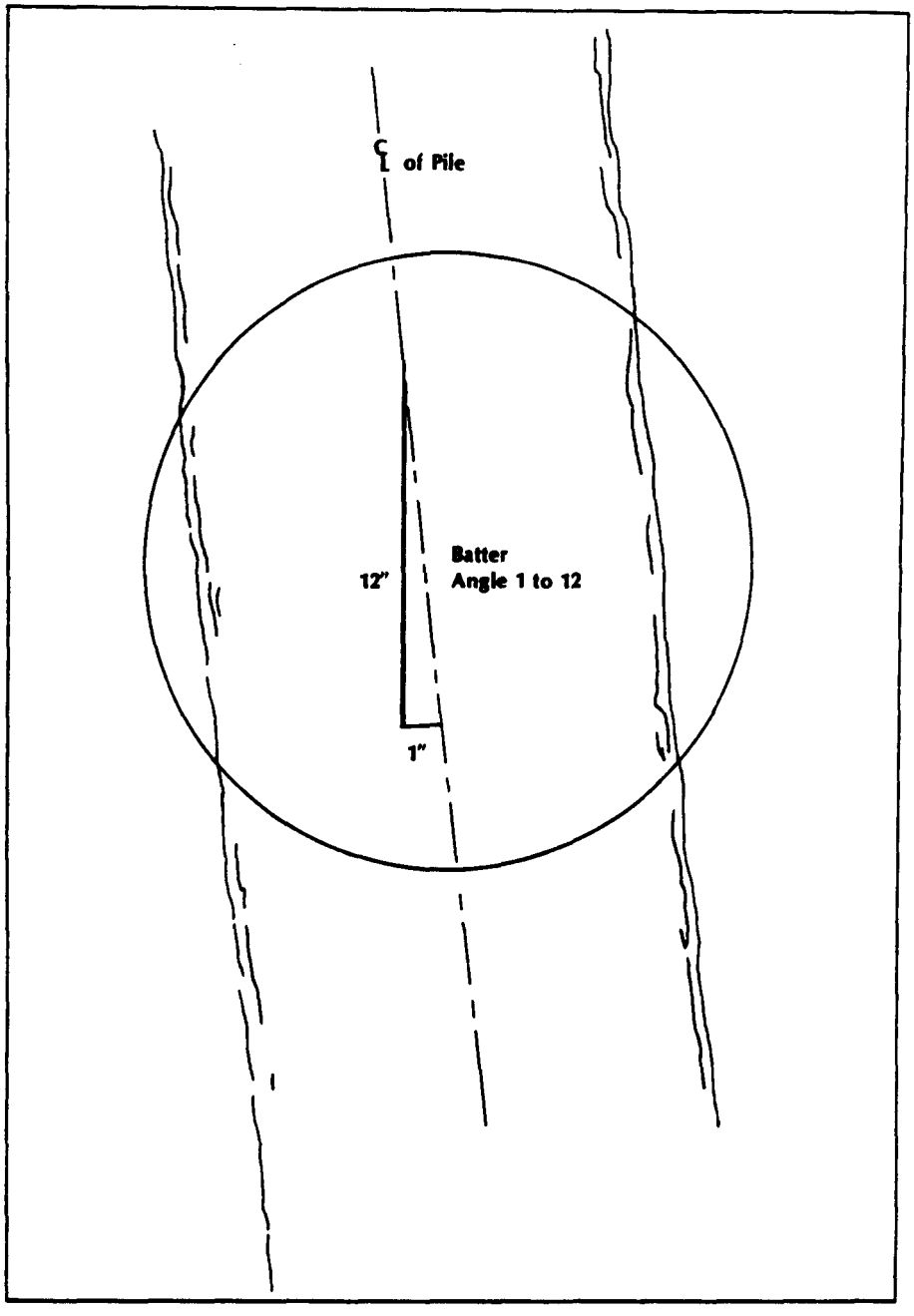

Figure 4-10 Batter of a pile

b. Checking misalignment by cap removal. If the pile is more than a few inches out of plumb during driving, an effort should be made to restore the pile to its proper alignment. The alignment can be checked by lifting the cap from the pile butt. The pile will rebound laterally if not properly aligned with the leads and hammer.

c. Aligning with block and tackle. During driving, a pile may be brought into proper alignment by using block and tackle (figure 4-11). The impact of the hammer will tend to jar the pile back into line. In the case of steel H-piles, this procedure may induce undesirable twisting and should be avoided if possible. Jetting either alone or with the preceding method, may be used.

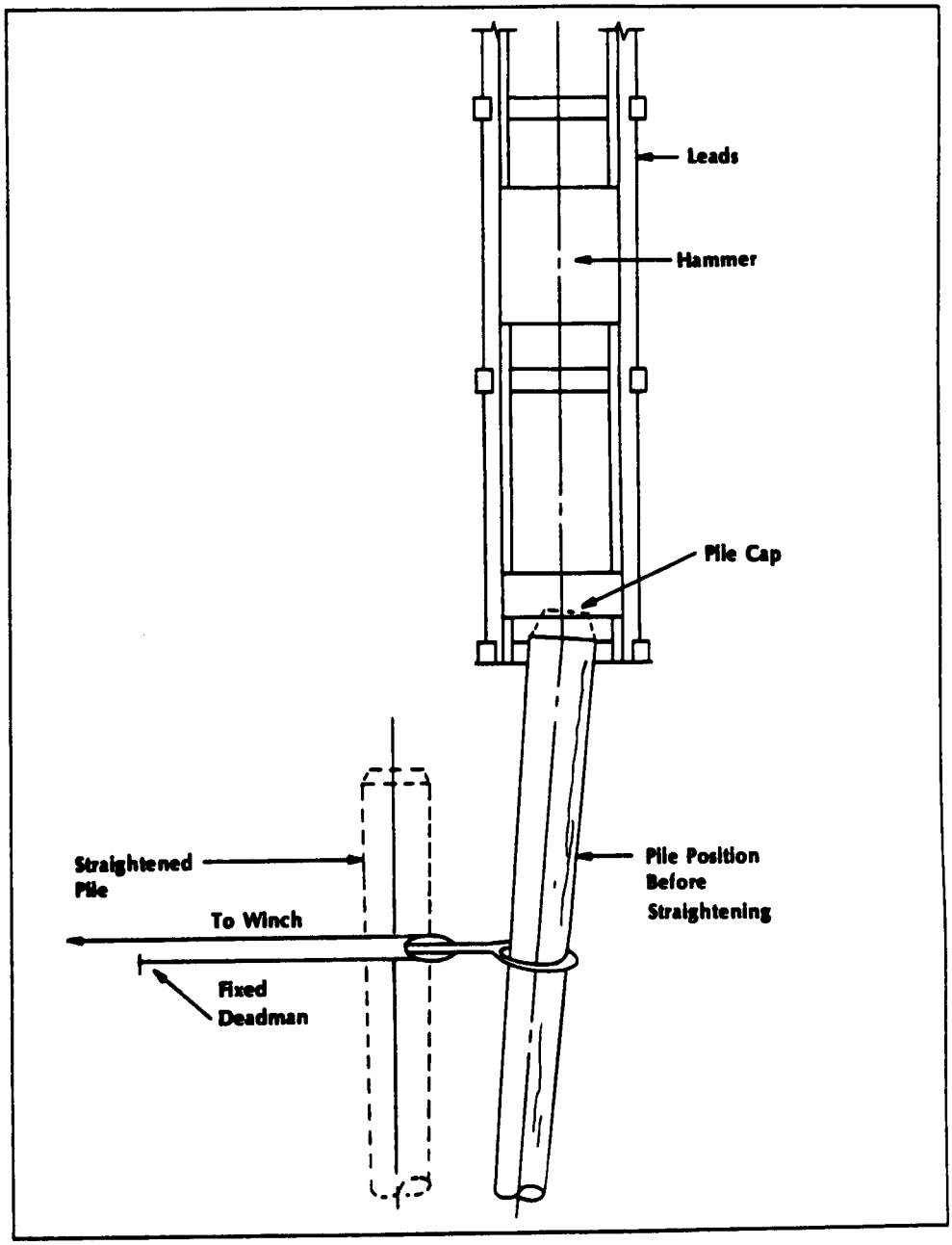

Figure 4-11 Use of block and tackle to realign pile

4-8. Obstructions.

Obstructions below the ground surface are often encountered during pile-driving operations. Obstructions may result from filling operations in the area or from old stumps or tree trunks buried by later deposits. Obstructions are frequently encountered when piles are driven in industrial and commercial areas of older cities or along waterfronts. They are a matter of concern since they can prevent a pile from penetrating enough to provide adequate load-carrying capacity. Piles are frequently forced out of line by obstructions and may be badly damaged by continued driving in an effort to break through the obstruction.

a. Driving. When an obstruction such as a rotten log or timber is encountered, 10 or 15 extra blows of the hammer may cause the pile to breakthrough (figure 4-12, 1). With steel or precast concrete bearing piles, extra blows of the hammer may break or dislodge a boulder (figure 4-12, 2); however, care must be taken that blows do not damage the pile. Pile alignment should be watched carefully during this operation to insure that the lower portion of the pile is not being deflected out of line.

b. Using explosives. If the obstruction cannot be breached by driving, the pile should be withdrawn and an explosive charge lowered to the bottom of the hole to blast the obstruction out of the way (figure 4-12, 3). If using explosives is not practical, the pile can be left in place, and the foundation plan can be changed to use other piles.

c. Jetting. Jetting is particularly valuable in soils which will settle firmly around the pile. Sands, silty sands, and some gravels provide conditions suitable for jetting as driving through these materials in a dense state results in pile damage. Displacement piles in cohesionless soils are frequently placed by jetting.

(1) Hose and pipe jetting. Jetting is performed by inserting the jet pipe to the desired depth, forcing water through the pile to loosen the soil, then dropping the pile into the jetted hole and driving the pile to its resistance. If the pile freezes before final embedment, jetting can be resumed. Jetting should not be deeper than 4 or 5 feet above final grade.

(2) *Attached jetting pipes and hoses.* Jetting for timber, steel, or standard precast concrete piles is usually done by an arrangement of jetting pipes and hoses. The jet pipe is connected with a flexible hose and hung from the boom or the pile driver leads. When possible, two jet pipes are lashed to opposite sides of the pile. Usually the pile is placed into position with the hammer resting on it to give increased weight, and the jet is operated so that the soil is loosened and displaced evenly from under the tip of the pile (figure 4-13). A single jet, however, is not worked up and down along the side of the pile, as the pile will drift in that direction. Proper use of jet pipes is shown in figure 4-14.

(3) *Special precast concrete jetting.* To facilitate jetting, jet pipes can be embedded into precast concrete piles, Jetting arrangements for precast concrete piles are shown in figure 4-15.

(4) *Precautions.* Where piles must be driven to great depths, the double water jets may be insufficient. Additional compressed air can be effective. For combined water and air jetting, the simplest method is to tack-weld a small air pipe to the outside of the water-jet pipe. In any jetting operation, the alignment of the pile is critical. Jetting is a useful method to correct the alignment of timber piles in a pile bent (figure 4-16). Jetting around a pile while it is being driven is undesirable as the pile will drift off line and location. Pile tips must be well

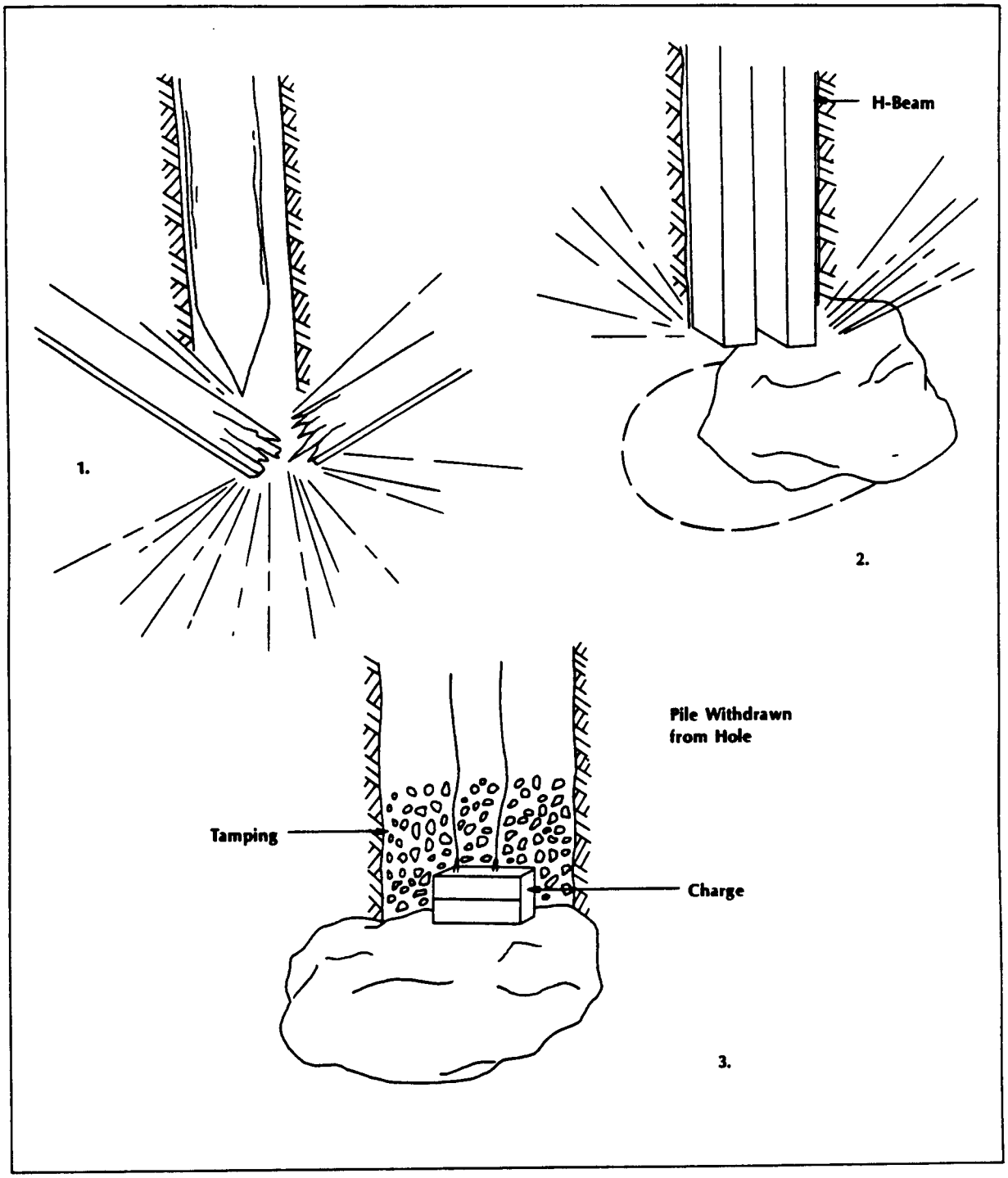

Figure 4-12 Breaching obstructions

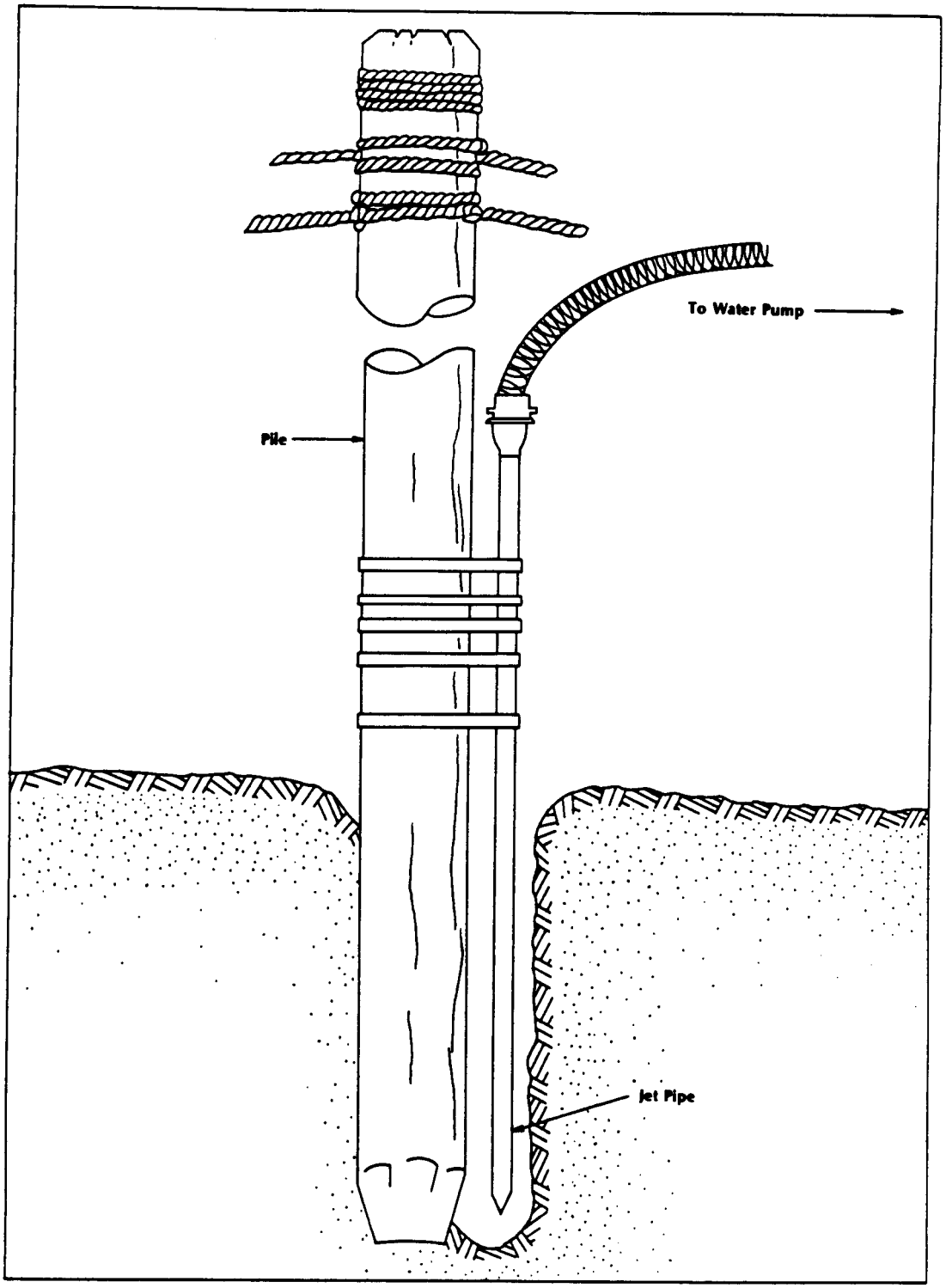

Figure 4-13 Jetting pile by pipes and hoses

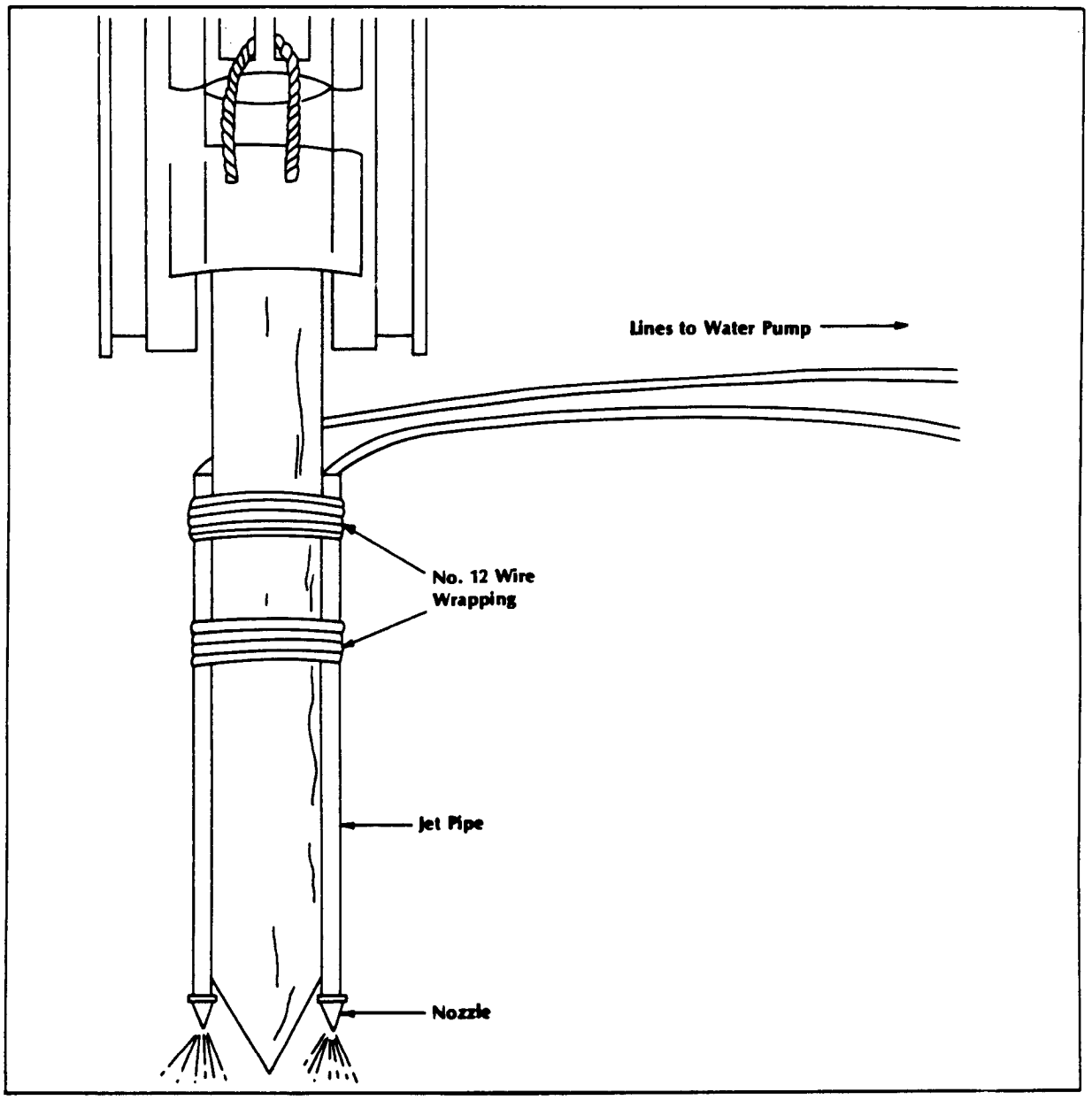

Figure 4-14 Use of jet pipes near pile tip

seated with reasonable soil resistance before full driving energy is used. The ultimate bearing capacity of the pile is generally not significantly affected by jetting. However, jetting will greatly reduce the uplift capacity of a pile.

4-9. Predrilling.

It may be necessary to predrill pilot holes if the soils above the bearing stratum are unusually stiff or hard. Predrilling keeps the preservative shell of treated timber piles

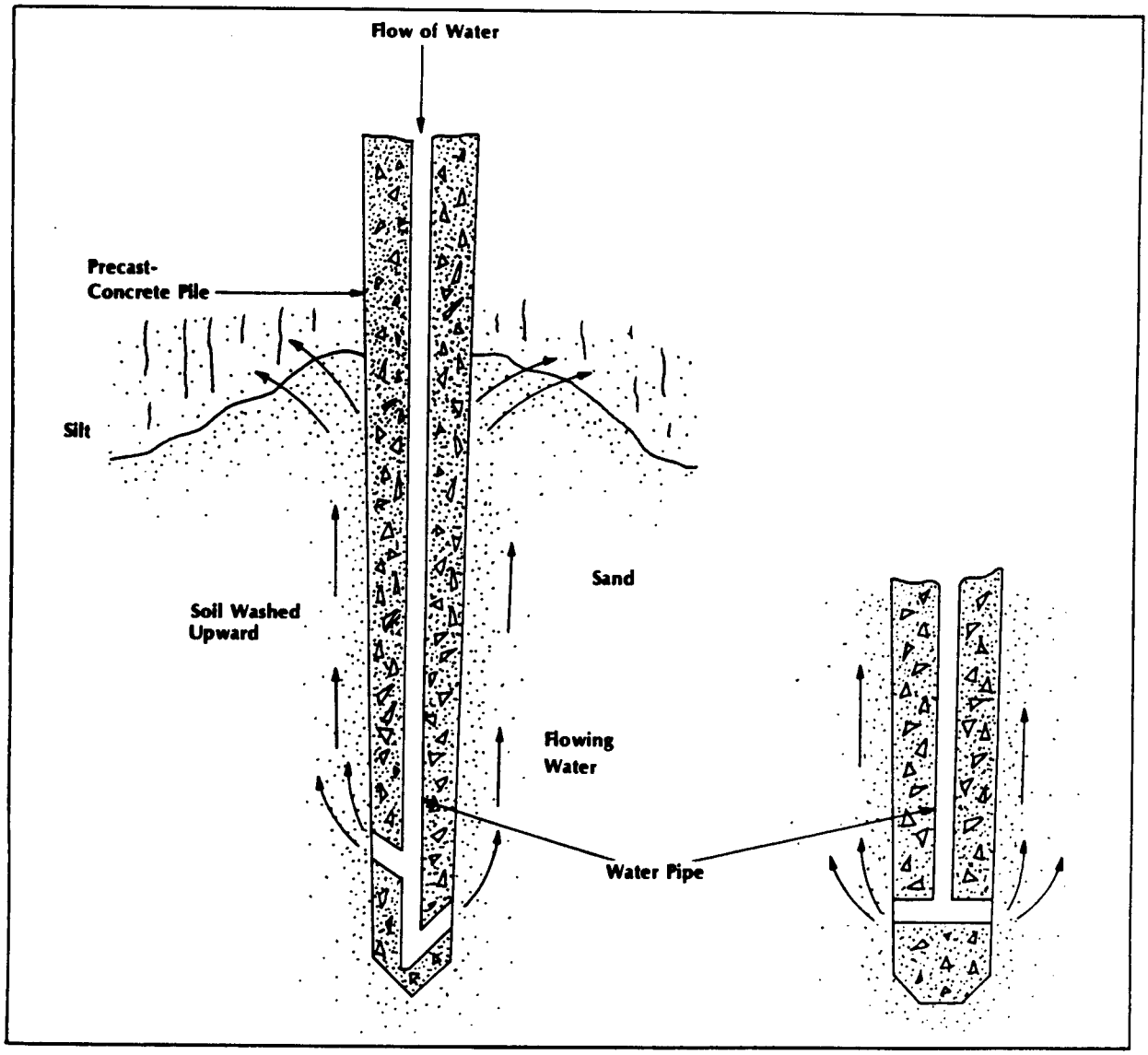

Figure 4-15 Precast concrete piles with internal jetting pipes

intact. Predrilling also reduces underwater heave and lateral displacement of previously driven adjacent piles. Holes are drilled slightly smaller than the diameter of the pile and to within a few feet of the bearing stratum. The pile is inserted, and the weight of the hammer forces the pile down near the bottom of the drill hole displacing any slurry. The pile is then driven to the required penetration or resistance.

a. Rotary equipment. Predrilling should be done with wet rotary equipment which leaves the hole filled with a slurry of mud. The method employs a fishtail bit that contains a water jet within the drill stem. The water and drill cuttings form a slurry which lines the walls and stops sloughing of unstable soil layers. Additives (such as bentonite) can also be used to stabilize the walls of the drill hole.

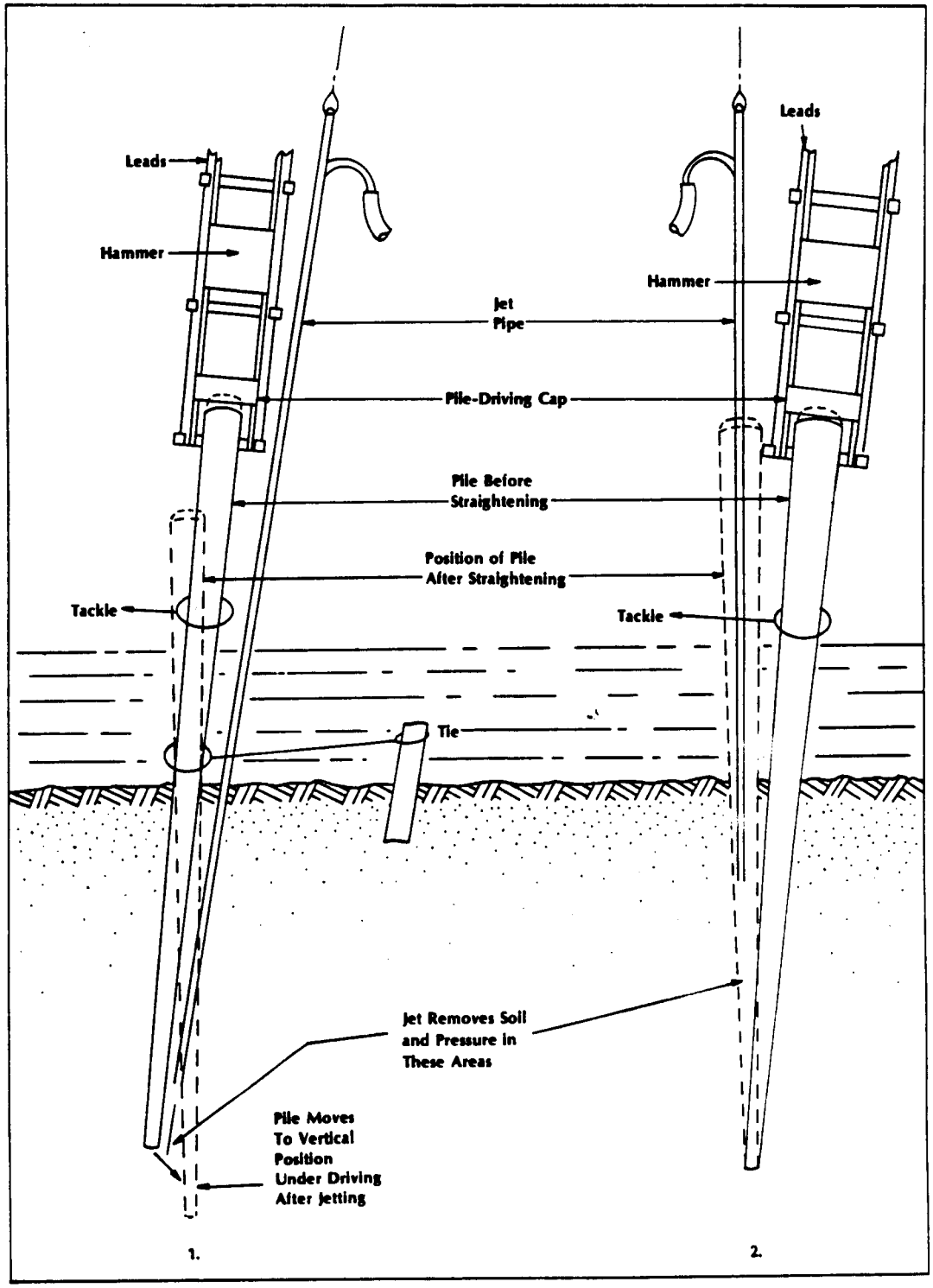

Figure 4-16 Realigning piles by jetting

b. Augers. Augers which remove all material from the hole can cause a quicksand action. Sand or soil may flow into the drilled hole below the water table. Augers should be used only above groundwater tables and in soils where a drill hole will stand open without collapsing.

4-10. Special placement techniques.

a. Spudding. Spuds can penetrate debris or hard strata so the pile can reach the bearing stratum. Spuds consist of heavy pile sections, usually with special end reinforcement. When heavy piles (such as steel or precast concrete piles) are driven, the pile may be raised and dropped to break through a layer of hard material or an obstruction. In a similar operation, a pilot pile is withdrawn, and the final pile is driven in the hole.

b. Jacking. A pile may be jacked into position. This method is usually used when it is necessary to underpin the foundation of a structure and headroom is limited or when vibration from conventional driving could damage an existing structure. The pile is jacked in sections using a mechanical or hydraulic screw jack reacting against the weight of the structure. The pile is selected for the specific situation, and it is built up in short, convenient lengths.

c. Vibrating. High-amplitude vibrators are used for driving piles in saturated sand and gravels, Vibratory hammers are particularly advantageous for driving sheet piling.

4-11. Driving piles in water.

a. Positioning piles. When piles are driven in water, different methods may mark the desired pile positions. When a number of bents are to be constructed, a stake is placed at each abutment approximately 6 inches from the pile centerline (figure 4-17). A wire rope is stretched between the two stakes, and a piece of tape or cable clip is fastened to the rope at each pile bent position. Piles are then driven at each tape or cable clip.

b. Using floating pile drivers. When a floating pile driver is used, a frame for positioning piles may be fastened to the hull. A floating template is sometimes used to position piles in each bent (figure 4-18). Battens are spaced along the centerline desired for each pile. The battens are placed far enough apart so that, as the pile is driven, the larger-diameter butt end will not bind on the template and carry it underwater. If the piles are driven under tidal water, a chain or collar permits the template to rise and fall with the tide. If the ends of the battens are hinged and brought up vertically, the template may be withdrawn from between the bents and floated into position for the next bent provided the pile spacing is uniform.

c. Using floating rigs. If a floating rig is available, it can be used to drive the piles for an entire structure before the rest of the work. In general, more piles can be driven per man-hour with floating equipment because the driver is easily moved. As soon as the piles in one bent have been driven, the rig may be positioned to drive the next bent, while the bent just driven is braced and capped. Floating pile. driver rigs are difficult to position where currents are strong and adequate winches are unavailable. Otherwise, they can be positioned easily either end-on or side-on to the pile bent which is being driven. Batter piles can be driven in any desired direction by adjusting the spotter or catwalk, without using a moon beam.

d. Driving from bridge or wharf. When pile driving uses mobile equipment operating from a deck of a bridge wall structure, two procedures may be used in moving the pile driver forward.

(1) *Walking stringer method.* As each bent is driven, the piles are aligned, braced, cut,

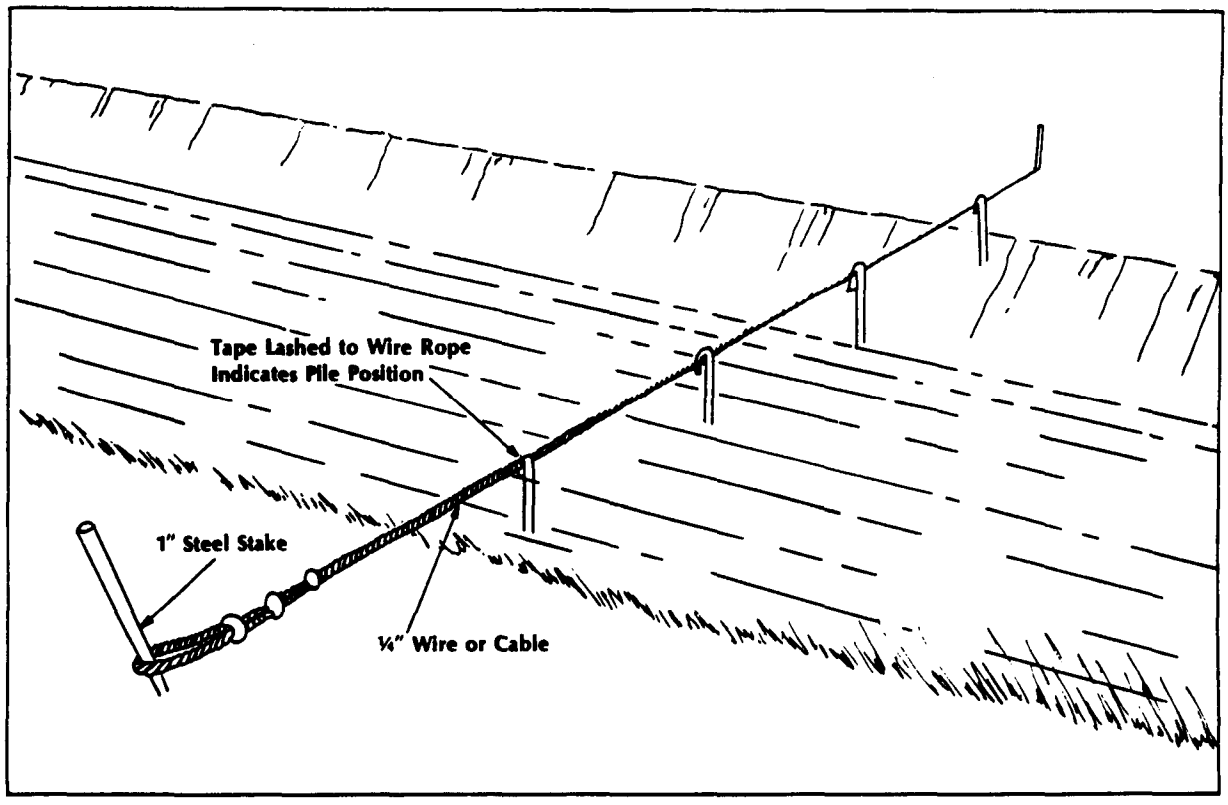

Figure 4-17 Wire rope guideline to position piles

and capped. The movable stringers are made by placing spacer blocks between two or three ordinary stringers so the driving rig can advance into position to drive the next bent. The movable stringers are laid onto the bent which has just been completed. When the advance row or rows of piles have been braced, cut, or capped, the pile driver picks up the temporary stringers behind and slings them into place ahead. The installation of permanent stringers and decking follows behind the pile driver. Variations of this method are possible when a skid-mounted piledriver is used. This method gives the pile driver less idle time than the method described in (2) following. Since the decking operations are completely separate, individual crews can be developed to drive, cut, cap, and deck. These crews become more proficient and are more rapid than crews that work at all three operations. This is hazardous because the machinery is supported by loose stringers and decking. Skill and organization are required because several operations may be in progress at the same time. Piles must move through the decking crews to reach the driving point, so planning is important.

(2) *Finish-as-you-go method.* Instead of using movable stringers, each bent or bench, including the permanent stringers or decking, may be completed before the rig is moved forward. This method is safer and requires less organization, since one operation follows another. The pile driver may be idle or set stringers. To complete each panel, personnel rotate jobs.

e. Driving from temporary earth causeways. An excellent method for driving

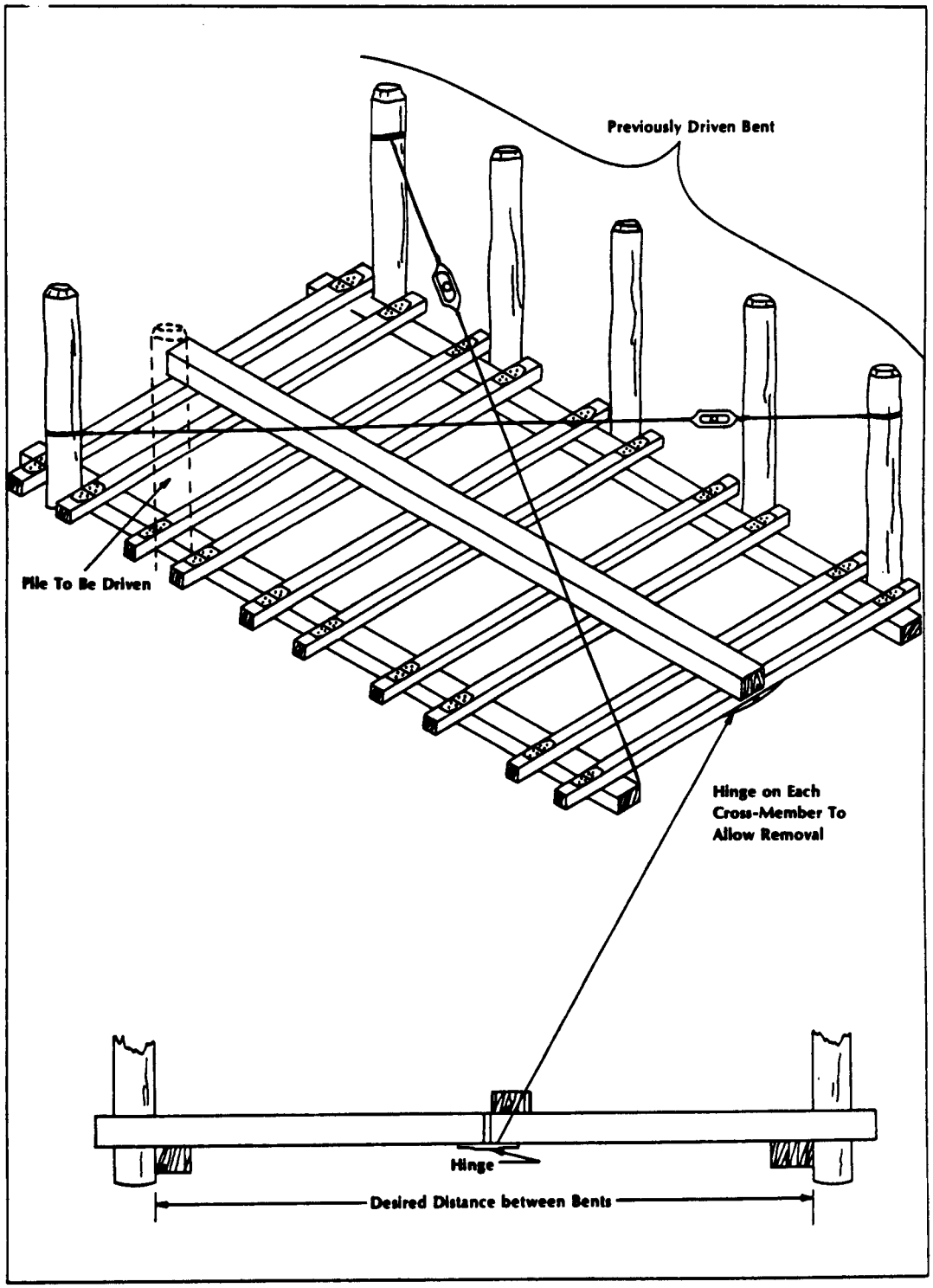

Figure 4-18 Floating template for positioning piles

piles for a bridge or wall structure in shallow water is to extend a temporary earth cause way from the shore. Piles may then be driven using a mobile rig operating on the causeway. In the usual case, piles are driven through the fill. This is the fastest method of building bridges and other structures, where height limitations permit and required penetrations are not unusual.

f. Driving from the 50-ton standard trestle. Used in depths up to eight feet, this trestle can drive two or three times as many piles as a bridgemounted trestle. This method involves constructing the bays (support structures) and using them as a platform. After completing a pile bent, a pile driver walks the standard trestle by striking the bay nearest the completed work, swinging it, and re-erecting it ahead.

g. Aligning. When all piles in a bent have been driven, they can be pulled into proper position with block and tackle and an aligning frame (figures 4-19, 4-20). Bracing and subsequent construction of pile bents are described in TM 5-312.

4-12. Driving underwater.

It is sometimes necessary to drive piles underwater rather than use a pile follower. Special pile hammers are designed for driving underwater. Recommendations by the manufacturer should be followed in preparing and rigging the hammer for underwater driving. Diesel hammers cannot operate underwater.

4-13. Pulling piles.

Piles split or broken during driving or driven in the wrong place ordinarily should be pulled. In some cases, it may be necessary to pull piles to clear an area. Sheet piles and, occasionally, bearing piles that have been driven for a temporary structure may be salvaged by pulling. Piles should be removed as soon as possible, since the resistance to pulling may increase with time. Common methods for pulling piles are described below.

a. Direct lift. If a pile is located so that a crane of substantial capacity can be moved directly over it, pulling by direct lift is possible. A sling should be wrapped around the pile and the pull steadily increased until the pile begins to move or is extracted. Jetting can be used to help loosen a pile. The boom should be snubbed to a stationary object to keep it from whipping back if the pile suddenly comes loose or the lifting tackle breaks.

b. Hammer and extractor lift. Piles may be pulled with air or steam-powered extractors or with inverted acting hammers rigged for this use. Vibratory hammers are effective. Usually, a 25-ton lift on the extractor will be adequate, but multiplereeved blocks in a derrick may be needed. If piles are difficult to pull, additional driving may break them loose. Use a safety line at the tip of the boom in case the connecting line or cable breaks.

c. Tidal lift. Piles in tidewater maybe pulled by attaching the slings to barges or pontoons at low tide and allowing the rise of the tide to exert the lifting force. To keep barges from tipping, a barge should be placed on either side of the pile; and the lifting force should be transmitted by girders extending across the full width of both barges.

4-14. Pile driving in cold weather.

It is possible to conduct pile-driving operations in severe cold even though the ground is frozen. Frost up to two feet thick can be broken successfully by driving a heavy pilot pile or a heavy casing. Ground can be thawed to a shallow depth by spreading a layer of several inches of unflaked lime over the area, covering the layer with snow, then

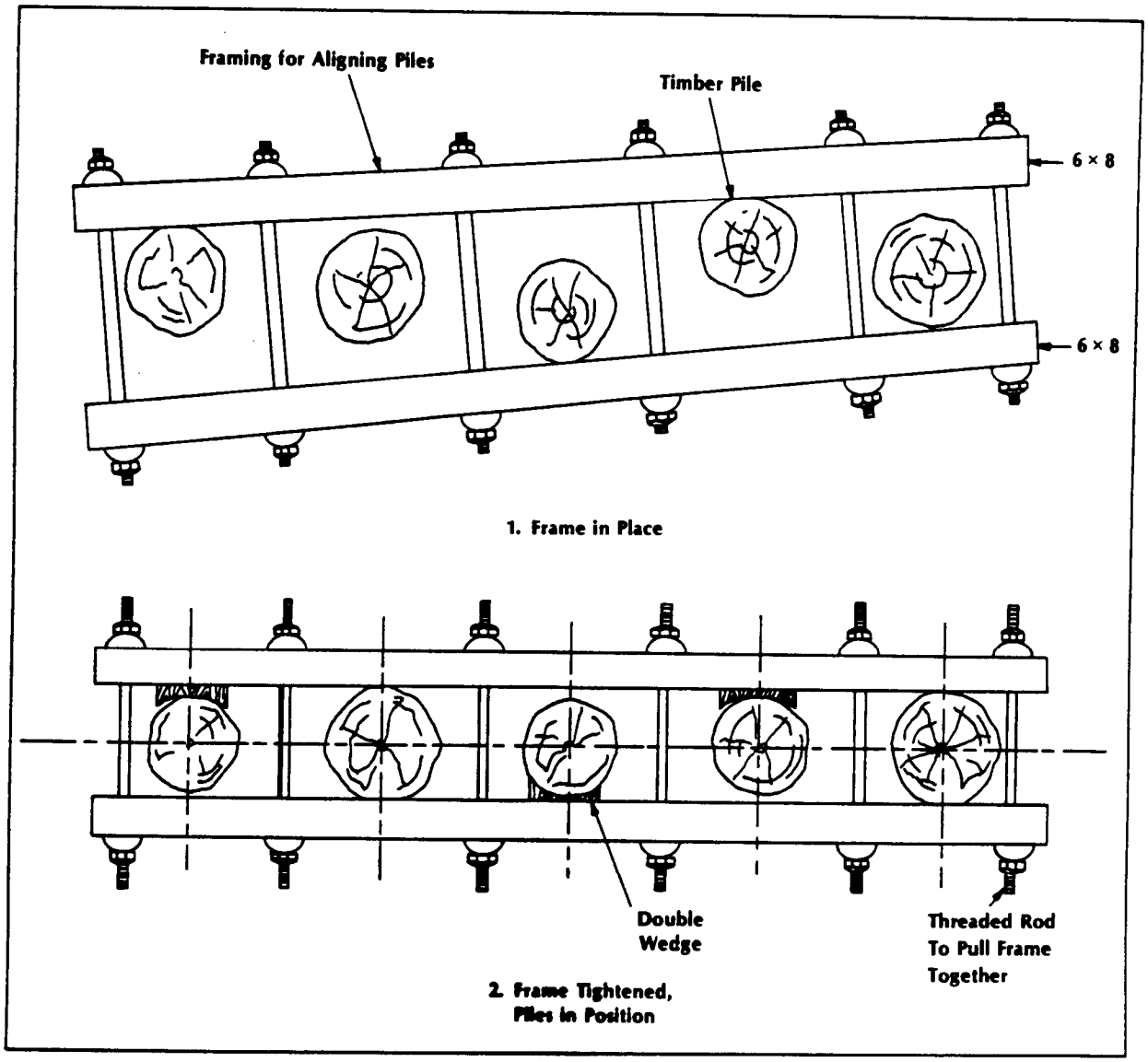

Figure 4-19 Aligning frame for pile bent

with a tarpaulin, which in turn is covered with snow. This method will melt a layer of frost 3 feet thick in 12 hours. Earth augers are effective in drilling holes in frozen ground and may aid pile driving. Holes cut in sound river ice act as guides for piles for bridge foundations. Auxiliary equipment such as a steam or air hammer and other machinery require special handling in cold weather. Instructions furnished by the manufacturer must be carefully followed.

4-15. Pile installation in permafrost.

Construction operations under arctic conditions and in permafrost areas are discussed in TM 5-349. Pile installation methods in permafrost include steam or water thawing, dry augenng, boring, and driving.

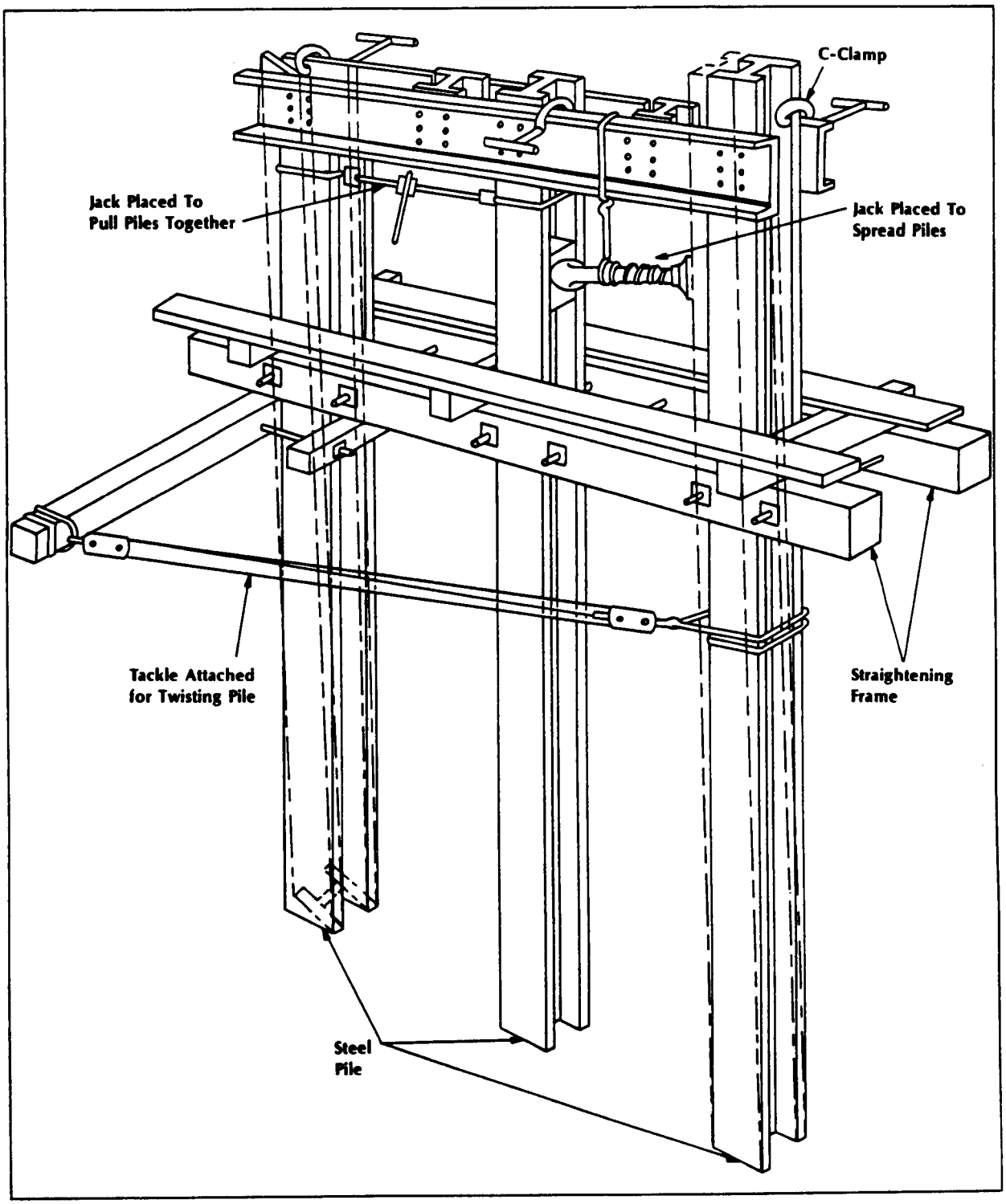

Figure 4-20 Aligning and capping steel pile bents

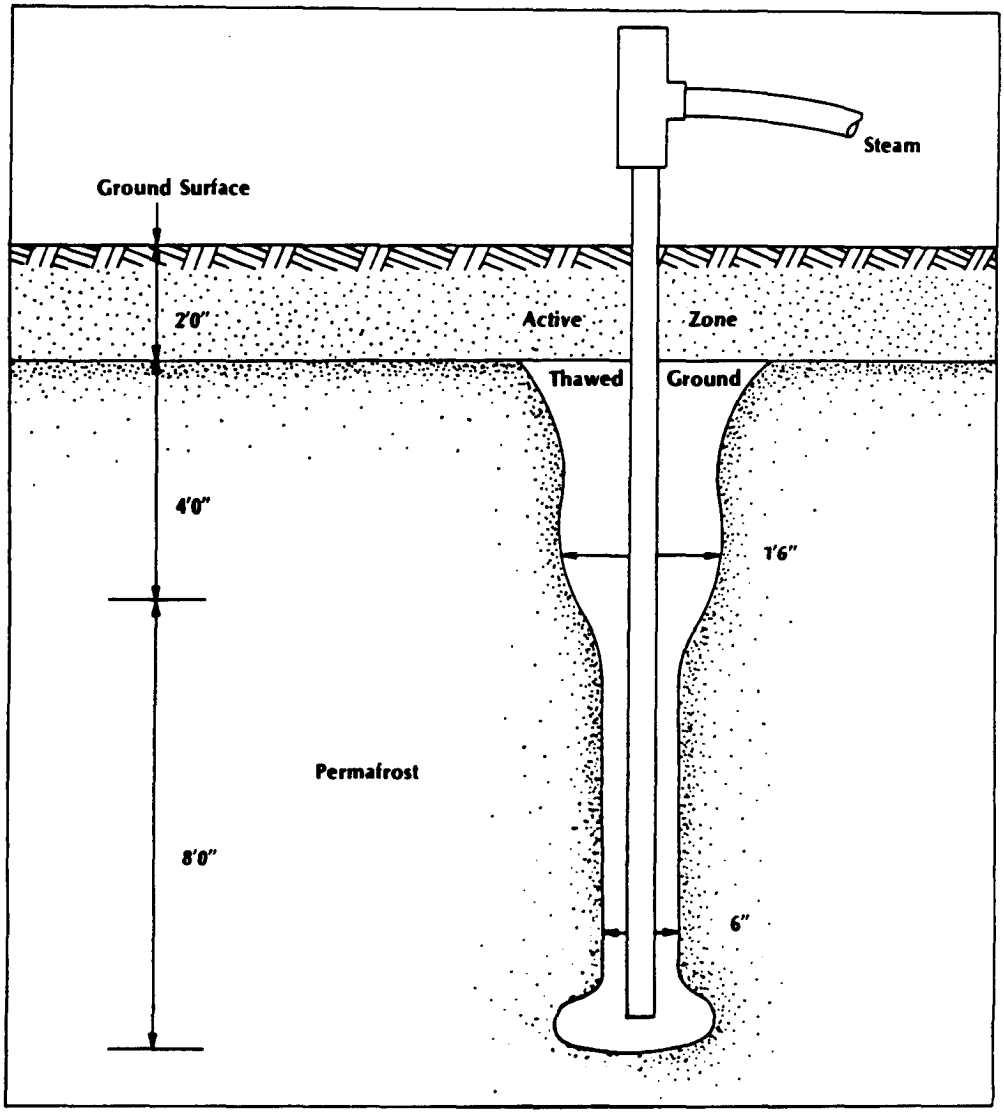

Figure 4-21 Approximate shape of thawed hole in sand-silt soil after 1½ hours of steam jetting

a. Steam or water thawing. Piles can be installed in permafrost by prethawing the ground with steam points or water. Steam at 30 psi delivered through a l-inch steel pipe is satisfactory for depths up to 15 or 20 feet. For greater depths, higher steam pressure (60 to 90 psi) and larger pipes (2-inch) are used. Water jetting is used if the soil is sandy. The pile is hammered lightly into the ground, and the steam aids the penetration while scaffolding or an A-frame facilitates handling long sections of steam-jetting and water-jetting pipes. The steam demand is approximately 15 to 20 cubic feet per foot of penetration. When the final depth is reached, the steam point is kept in the hole to make the hole big enough to accept the pile. If the soil is sandy, the steam point is kept in place for ½ hour; if the soil is clay, it may remain for up to 3 hours. Figure 4-21 shows the approximate

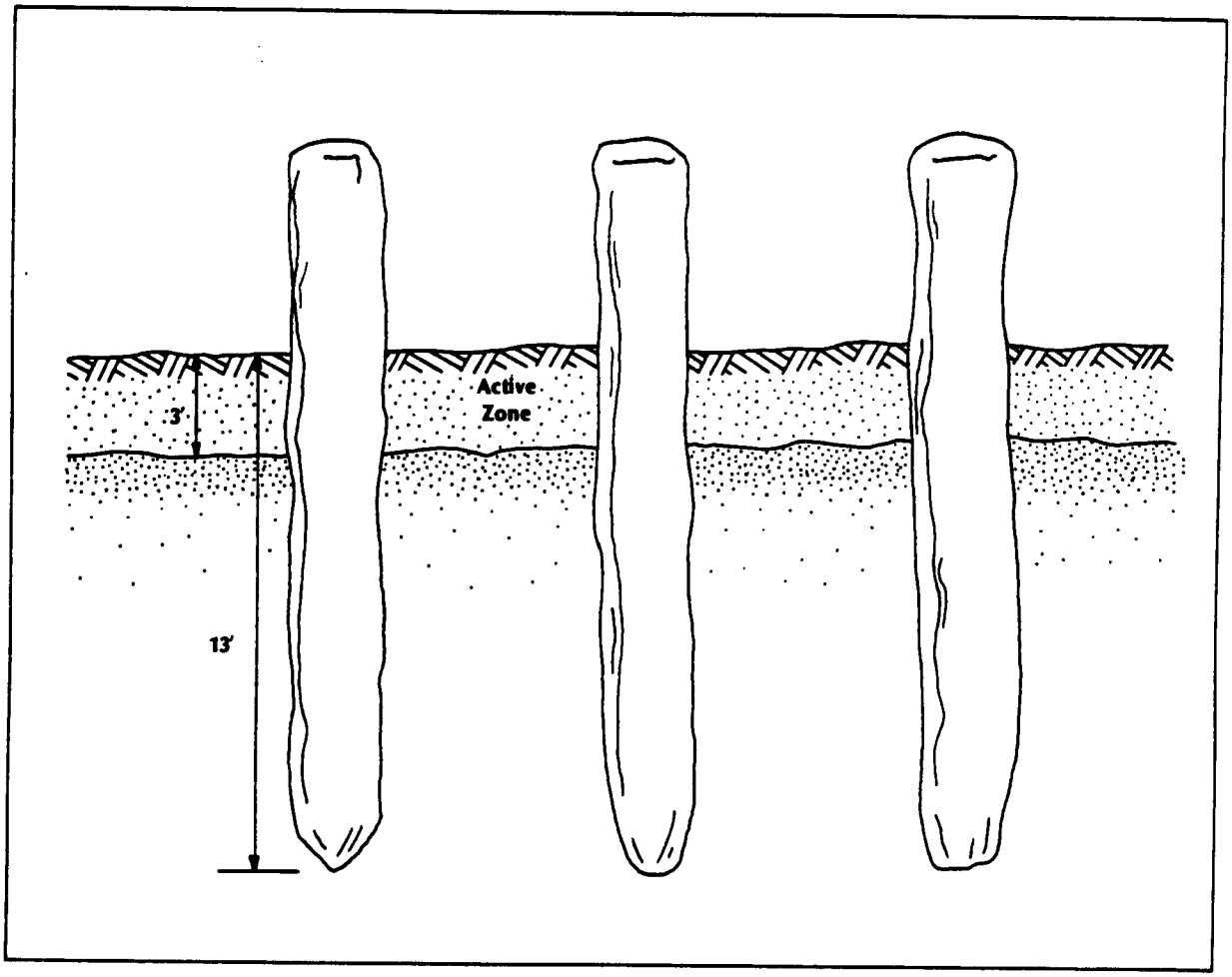

Figure 4-22 Piles driven through 3 feet of active zone to a depth of 13 feet after thawing

shape of the hole thawed in sand-silt soil after 1½ hours of stem jetting.

(1) *Setting the pile.* After the hole has been thawed properly, the pile is placed by the usual methods. After three to four days of thawing, a series of piles may be set (figure 4-22). Wooden piles have a tendency to float when placed in the thawed hole and therefore must be weighted or held down until the permafrost begins to refreeze.

(2) *Disadvantages.* Steam or water thawing has the disadvantage of introducing so much heat into the ground that freeze back may be indefinitely delayed. Piles may not develop adequate bearing capacity, or-host heave may work them out of the ground and damage supported structures. Steam or water thawing should not be used in areas where the mean annual permafrost temperature is greater than 20°F. This method may be used in colder permafrost only with exceptional precautions to control heat input into the ground if other methods of installation are not possible.

b. Dry augering. Pile holes maybe drilled in the permafrost using earth augers with specially designed bits for frozen ground.

Holes 2 feet in diameter can be advanced at rates of up to about 1 foot per minute in frozen silt or clay, depending on the type of bit, ground temperature, and size of equipment. Holes up to 4 feet or more in diameter can be drilled readily in such soil. Drilling with an auger is the easiest method when the frozen ground surface permits ready mobility and steam and water do not have to be handled. This method is not feasible in coarse, frozen soils containing boulders.

(1) *Hole drilling.* The holes maybe drilled undersized, and wood or pipe piles maybe driven into the holes. However, the holes usually are drilled oversized; and a soil-water slurry is placed in the annulus' space around the pile and allowed to freeze back, effectively transferring the imposed pile loads to the surrounding frozen soil.

(2) *Slurry.* Silt from a borrow pit or from the pile hole excavation can be used for slurry as can gravelly sand, silty sand, or plain sand. Clays are difficult to mix and blend, and when frozen they are not strong. Gravel, unsaturated soil, water, or concrete should not be used for backfill in permfrost areas. Organic matter must not be used in slurry. Details on dry augering are contained in TM 5-852-4.

c. Boring. Holes for piles may be made by rotary or churned drilling or by drive coring (under some conditions) using various bits and drive barrels. Frozen materials are removed with air, water, or mechanical systems. Procedures are the same as for dry-augered holes.

d. Driving. Conventional or modified pile driving procedures, including diesel and vibratory hammers, may be used to drive open-ended steel pipe and H-piles to depths up to 50 feet or more in frozen ground composed of silty sand or finer-grained soils at ground temperature above 25°F. Under favorable conditions heavy pipe and H-piles can be driven into the ground at lower temperatures. Freeze back is complete within 15 to 30 minutes after driving. The H-pile driven in frozen soil should not be smaller than the HP 10 x 42, and the rated hammer energy should not be less than 25,000 foot-pounds.

4-16. Cutting and capping of piles.

a. Timber piles. The capping of timber-pile bents should bear evenly on every pile in the bent. The piles should be cutoff accurately by following sawing guides nailed across all piles in the bent (figure 4-23). After the piles are cut and treated with preservatives, the cap is placed and fastened to the piles by drift pins driven through holes bored from the top of the cap into each pile. If a concrete cap is used, the tops of timber piles should be cut square, treated with preservative, and embedded in the concrete at least 3 inches.

b. Steel piles. Steel-pile bents are cut to the proper elevation using a welding torch. A working platform and cutting guide fastened with C-clamps can be used for this purpose (figure 4-20). Capping of steel piles with steel members follows the same procedure as outlined for timber piles, but the members are joined by welding or riveting, and steel plates are used rather than timber splices or scabs. If the cap is reinforced concrete, the top of the pile should be embedded at least 3 inches in the concrete. A well-designed reinforced concrete pile cap does not require steel plates to transmit a compressive load to H-piles. If the piles are subject to uplift, cap plates or additional embedment is required.

c. Concrete piles. Cutting concrete piles requires concrete saws, pneumatic hammers, and an acetylene cutting torch. A V-shaped channel is cut around the pile at the level of the desired cutoff. Reinforcing bars are exposed and cut with the torch at the desired

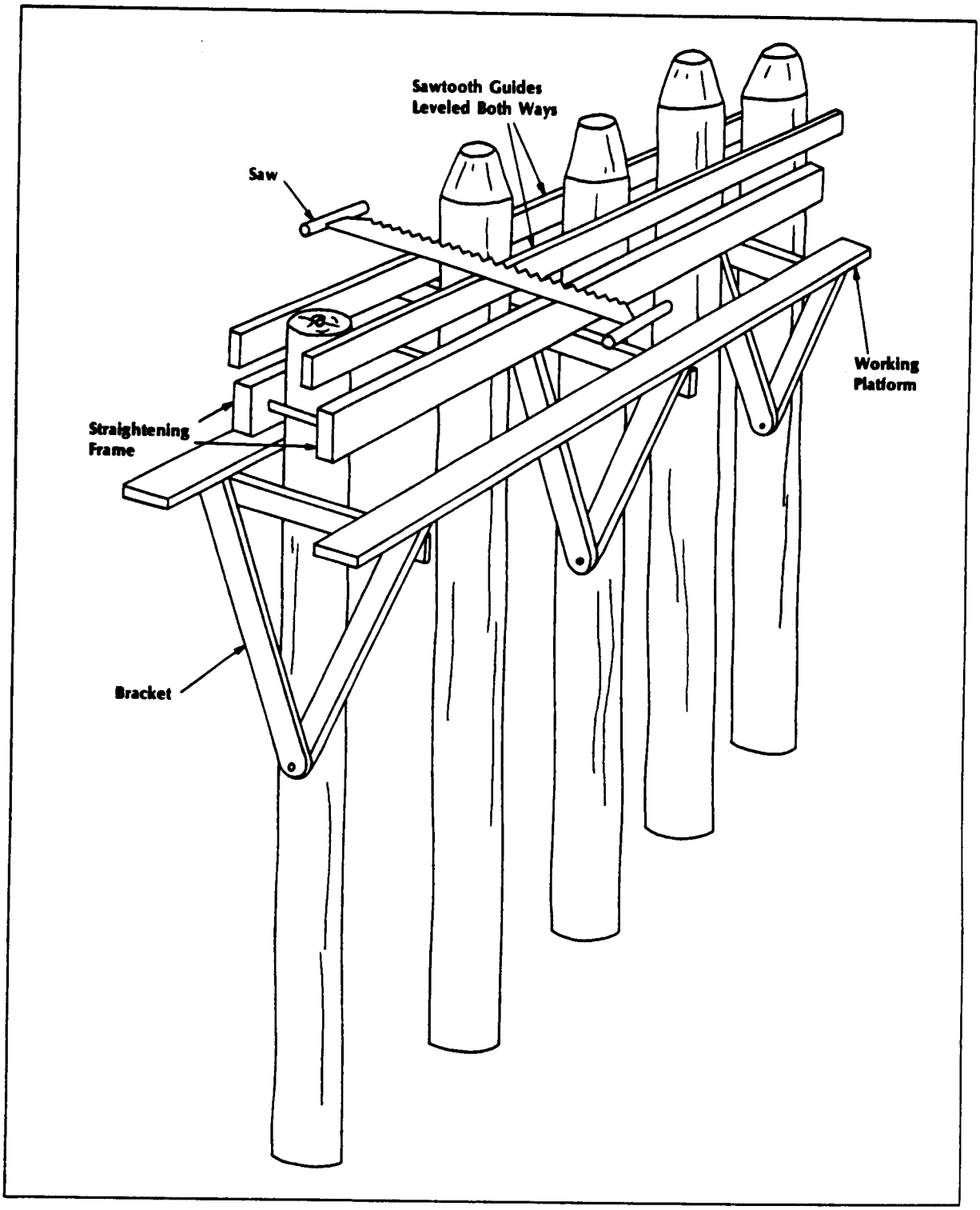

Figure 4-23 Cutting timber pile bent to final height

point above the cutoff. If possible, the reinforcing bars should project into a concrete cap for bonding. The head of the pile can be broken off by wedging or pulling with a line from a crane. The cap is placed on top of the piles by casting in place or drilling grout holes at the proper position in a precast cap. Another suitable method is to drill holes and to grout in bolts or reinforcing steel, depending on the type of cap used.

d. Anchorage. The uplift force on a structure is transmitted to the pile by a bond between the pile surface and the concrete of the pile cap, or by a mechanical anchorage. The ultimate bond between concrete and freshly-embedded timber piles may be 60 psi or more; however, long submergence may cause some deterioration of the outer layer of wood which reduces the bond value. When the embedded portion of timber piles is submerged, a working stress for a bond of not more than 15 psi should be used without considering the end surface of the pile. When the load in tension is greater than the strength which can be developed by the bond, a mechanical anchorage can be used. The resistance of a wood pile to extraction from concrete maybe increased by notching the embedded portion of the pile and considering the longitudinal shearing strength of the timber.

Section III. PREPARATION AND USE OF PILES

4-17. Sheet piles.

a. Alignment. When sheet piles are driven as permanent structures, such as bulkheads, the first pile must be driven accurately, maintaining alignment throughout. A timber-aligning frame composed of double rows of studs, to which one or two rows of wales and diagonal bracing are spiked, may be required to maintain alignment, in soft soils. Normal practice is to drive the ball end of interlocking steel sheet piles to prevent soil from being trapped and forcing the interlock open during driving.

b. Steel sheet piles. Interlocking steel sheet piles can be driven by one of two basic methods.

(1) *Single pile or pair of piles.* In this method the driving leads must be kept vertical and stable, with the hammer centered over the neutral axis of the pile. This requires a firm, level foundation for the driving equipment.

(2) *Preassembled sheet piles.* The piling and wall are formed and driven along the line. The piling is set with both axes vertical. Vibration in the hammer or the pile will drive the piles out of alignment. Z-piles are driven in pairs. Single or pairs of short piles are driven to full depth in soft ground to prevent creep. Long piles are driven into the ground as follows.

- Set waling along the line of sheeting.
- Drive a pair of sheet piles to part depth.
- Set a panel of a dozen single piles or pairs in the walings.
- Drive the last pile or pair in the panel part way.
- Drive the piles between the first and last pile or pairs of piles to full depth.
- Drive the first pile to full depth.
- Drive the last pile two-thirds its full penetration to act as a guide for the first pile of the next panel.

c. Concrete sheet piles. Concrete sheet piles are frequently placed by jetting. If a watertight wall is required, the joints are grouted after driving is completed. The soil at

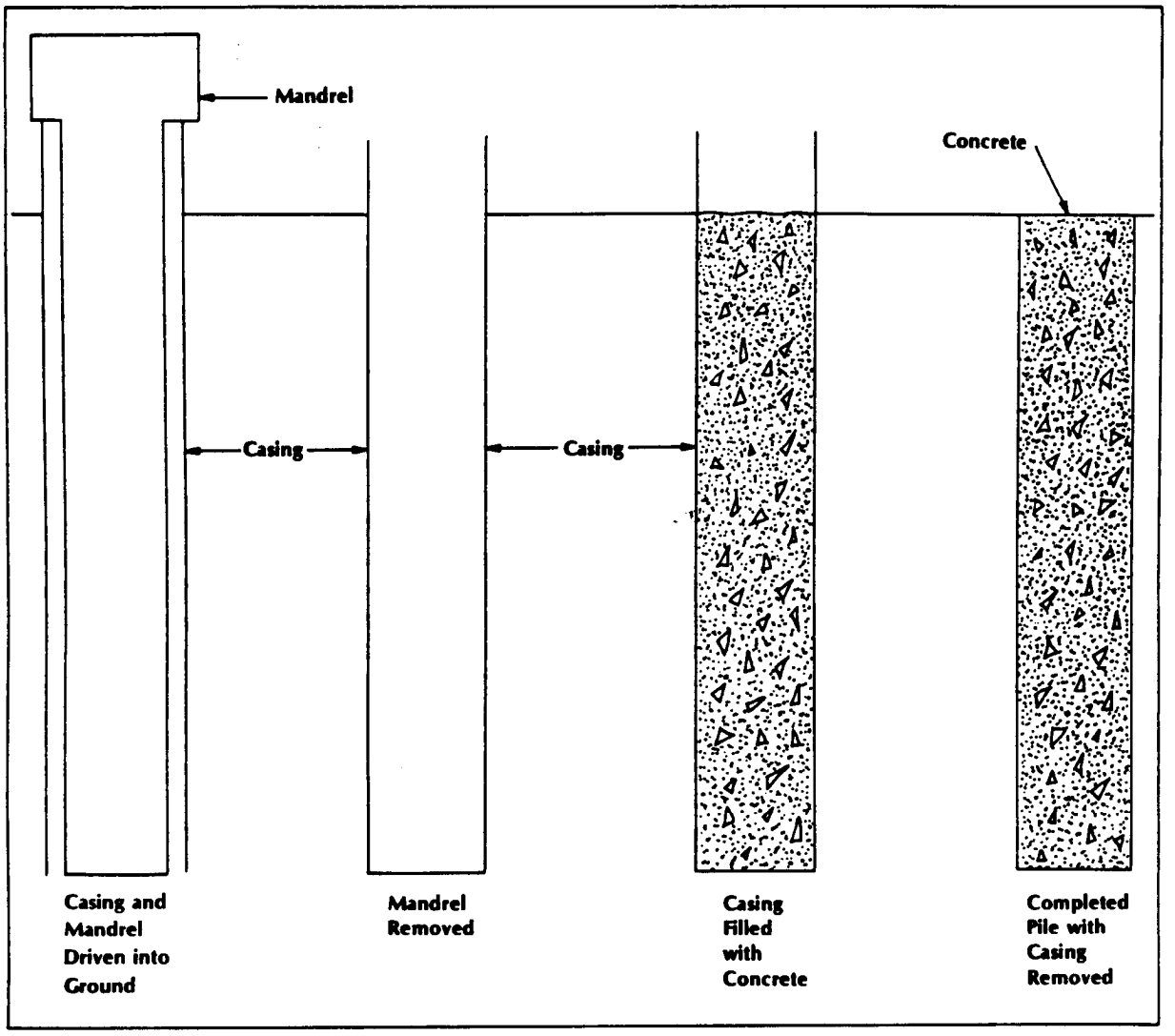

Figure 4-24 Procedure for placing cast-in-ground concrete piles

the bottom of the pile is slushed out by a water jet pipe of sufficient length to reach the bottom of the pile. A tremie is used to place grout underwater. Flexible fillers such as bituminous material may be placed in joints at intervals of 25 to 50 feet. If a cap is placed on the sheet pile wall, the flexible joints continue through the cap. In reinforcing previously driven sheet piles, frictional drag may occur. To counteract this, the piles may be bolted or welded to a stiff waling. If a pile has been drawn down, an additional length is usually welded on rather than attempting to jack up the pile.

4-18. Drilled piles.

Power-driven earth augers are used to drill holes to the size and depth required (figure 4-24). Commercial drilling rigs are available in a wide variety of mountings and driving arrangements. If the holes remain open and

dry until concreting is completed, the foundation can be constructed rapidly and economically. If the walls of the hole are unstable and tend to cave in, the hole maybe advanced using a slurry, similar to drilling mud alone or in combination with casing.

a. Slurry. Slurry is a mixture of soil, bentonite, and water which forms a heavy, viscous fluid mixed by lifting and lowering the rotating auger in the hole. When the slurry obtains the proper consistency, the hole is advanced through the cohesionless zone using the auger. The slurry stabilizes the wall of the hole, preventing inflow of groundwater. Slurry is added at the bottom of the hole as depth is advanced.

b. Dry hole. If the hole is dry, the concrete is allowed to fall freely from the ground surface. The cement and aggregate may separate if the concrete falls against the sides of the shaft. If the diameterie small, a short, vertical guide tube is located at the center of the top of the shaft where the concrete is introduced. Reinforcement may be provided through a circular cage inside which the concrete can fail freely. A slump of about 6 inches is suitable under most conditions. Higher slumps are used in heavily reinforced piers. The presence of even a small amount of water in the bottom of the shaft may reduce the strength of the concrete. Bags of cement are sometimes laid on the bottom to absorb the excess water before the concrete is placed. Tremied concrete can be placed in an uncased slurry fill hole; however, refined techniques and experienced specialist contractors are mandatory.

4-19. Shell-type piles.

In shell-type, cast-in-place concrete piles, the light steel casing remains in the ground and is filled with concrete after it has been inspected and has been found free of damage (figure 4-25).

Section IV. SUPERVISION

4-20. Manpower.

The size of the pile-driving crew depends upon a number of variables: equipment available; type, length, and weight of piles being driven; and driving conditions. The minimum crew is 5 in most situations. In driving light timber piles with a drop hammer or a crane fitted with pile-driving attachments, 1 person would be needed as a supervisor, 1 as a crane operator, and 3 as helpers in handling the piles and hammer. One person should serve as an inspector, recording blow counts and penetrations. A carpenter may be needed to cut off the piles. A larger crew is required to drive long, steel bearing piles under hard driving conditions. If a steam hammer is used, a boiler engineer and fire fighter will be required. If an additional crane or winch is needed to place the piles into position, additional personnel are required. A welder may be needed to cut off the piles at the correct elevation or to weld on additional sections. The crew may consist of 10 to 12, including supervisors and 4 or 5 laborers.

4-21. Productivity.

The rate at which piles can be installed depends upon many factors, such as equipment, length and weight of the piles, and driving conditions. A normal-sized crew can install from 1 ½ to 5 timber bearing piles per day (day operations) and from 3 to 6 steel sheet piles per hour. Figures for pile-driving operations can be established from experience with a particular crew, equipment, piles, and driving conditions.

4-22. Safety.

a. Safety precautions. Standard safety and accident prevention procedures developed for general construction operations also apply

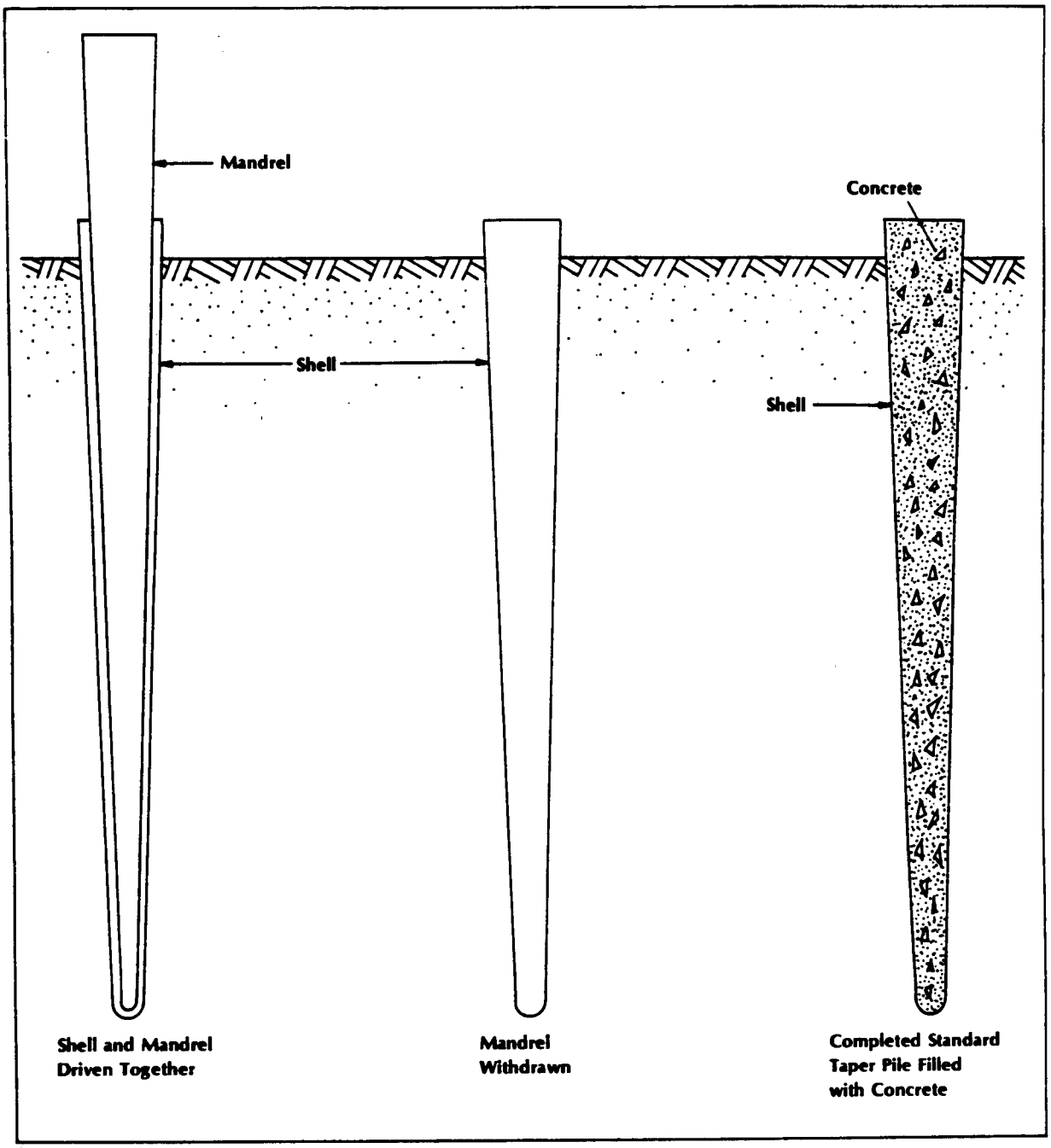

Figure 4-25 Procedure for placing shell-type, cast-in-place concrete piles

to pile-driving operations. Pile driving is a hazardous operation, and adequate care must be taken to protect personnel from injury.

- Proper individual protective equipment (shoes, gloves, helmets, and ear plugs) should be worn at all times. All equipment guards should be maintained and in place.

- Cooperation between equipment operators and personnel is essential to avoid accidents. Hand signals must be used during pile installation operations (figure 4-26).

- Personnel must be kept clear when piling is being hoisted into the leads and during the first few feet of driving. Mill scale, for example, may be driven off a steel pile during driving.

- Operators must never stand under or near a pile hammer. If an y adjustment is to be made at or below a hammer, the hammer should be stopped and rested on a pile or secured by placing the hammer-retaining pin through the pile leads. Ladders should be provided on frames and leads to give access to the hammer.

- All equipment, particularly pile leads, must be examined frequently for any cracks or loose bolts.

- Diesel pile hammers must be cleaned regularly to avoid an accumulation of diesel oil which may become a fire hazard. They should be fitted with a trip wire or rope so that the hammer can be stopped from ground level and workers do not have to climb ladders to operate the fuel cutoff.

- The exhaust of steam hammers must be controlled so that workers are not endangered by discharges of steam or scalding water. All hoses and hose connections must be in good condition and properly secured to the hammer inlet. The end of the hose must be tied to the hammer to prevent a flying end if the connection should break loose.

- Helmets, driving caps, anvil blocks, and other parts receiving impact must be inspected regularly for damage or fracture. Worn parts should be replaced before wear becomes excessive, and particular care taken to avoid wear that will develop a stress concentration on a moving part.

- The hammer must be kept at the bottom of the leads whenever possible.

b. Handling procedures. Creosoted timbers can cause skin bums. When creosoted piles are driven, a fine spray is created when the hammer strikes the pile. This material on the skin should be washed off immediately with soap and water. Cream or lotion maybe used to protect the skin from creosote. Goggles protect the eyes. Hand and power tools used to prepare piles for driving and to cut off, straighten, and align piles after they are driven must be used safely. When it is necessary to cut off the tops of driven piles, piledriving operations should be suspended except when the cutting operations are located at least twice the length of the longest pile from the driver.

c. Water procedures. If piling is carried out over water, workers should wear life jackets. Life belts with a suitable length of cordage should be available on the attendant floating craft.

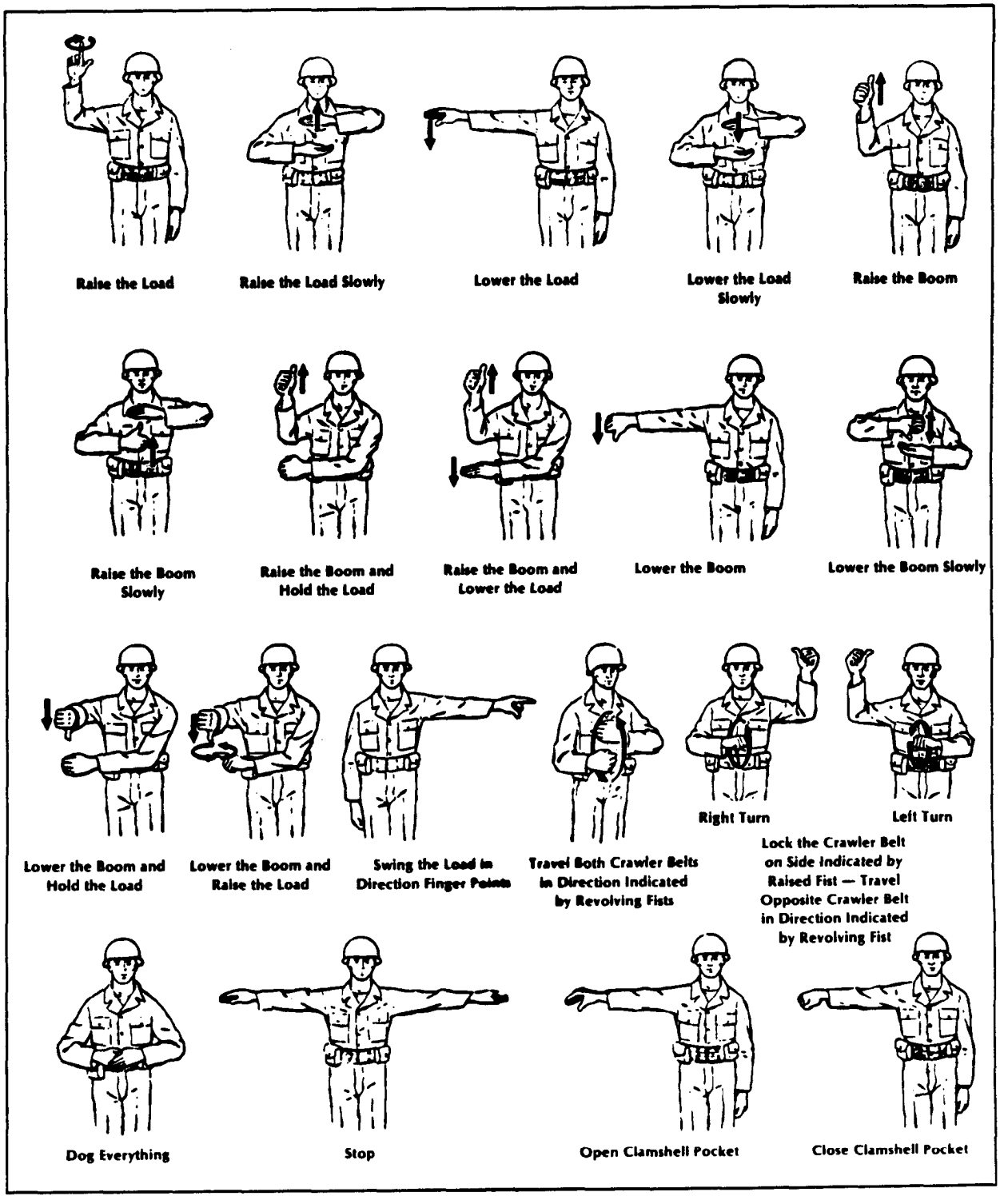

Figure 4-26 Hand signals for pile-driving operations

CHAPTER 5
ALLOWABLE LOADS ON A SINGLE PILE

Section I. BASICS

5-1. Considerations.

For safe, economical pile foundations in military construction, it is necessary to determine the allowable load capacity of a single pile under various load conditions.

5-2. Principles.

A structure is designed on pile supports if the soil is inadequate for other types of foundations. The basic principles for pile foundations are that they must be safe against breaking (bearing capacity and shear failure) and buckling and that they must not settle excessively or exceed the soil's bearing capacity. There can be other factors, such as the need to protect a bridge pile from scour.

5-3. Requirements.

The requirements for the preliminary design of a pile foundation follow.

a. Studying soil. Obtain a soil profile resulting from subsurface explorations. This analysis will determine whether the piles will be friction (sand or clay), end bearing (stratum of firm earth), or a combination of both. Local experience can be a useful guide, and sufficient laboratory test data to estimate strength and compressibility of major strata are required.

b. Determining pile length. The most accurate method for determining the length of friction piles is to drive and load test piles. Since the time factor in a theater of operations rarely permits driving and load testing of fiction piles, lengths may be calculated from analysis of the soil profile. Uniformity of soil conditions will determine the number of test piles driven at selected locations to verify the computed lengths. On small projects and for hasty construction, dynamic formulas may be used to assess the allowable pile load. If soil conditions are nonuniform and estimating pile lengths accurately is difficult, a pile with an easily adjustable length (timber or steel) should be used. The driving resistance in blows per inch should be used to establish allowable loads by comparing results of nearby piles in similar soil conditions. For deliberate construction, where little experience is available, load tests on selected piles should be performed and interpreted. A minimum of three driving tests (and more if subsurface conditions are erratic) should be

performed. Record driving resistance of test piles and all piles installed. Compare the resistances of the test piles to insure against localized weak subsurface conditions.

Section II. STRUCTURAL DESIGNS

5-4. Structural capacity.

a. Allowable pile stresses. Overstress in timber piles under design loads should not exceed the values given in table 2-2. The allowable stress in steel piles should not exceed 12,000 psi. Estimate possible reductions in steel cross section for corrosive location or provide protection from corrosion. The allowable stress in precast or cast-in-place piles should not exceed 33 percent of the concrete cylinder strength at 28 days.

b. Driving stresses. Do not damage the piles by overdriving. Final driving resistances for various pile types should be limited to the values indicated in chapter 4.

c. Buckling failures. There is no danger of buckling a fully-embedded, axially-loaded, point-bearing pile of conventional dimensions because of inadequate lateral support, provided it is surrounded by even the softest soils. The ultimate load for buckling of slender steel piles in soft clay is discussed later in this chapter. Buckling may be a problem when piles project appreciably above ground surfaces. In such cases, the unsupported lengths of the pile should be used in column-stress formulas to determine the safe load capacity. The unsupported length, 1“, is computed assuming the pile is laterally supported at 10 feet below ground surface in soft soils and 5 feet in sands and firm soils. This laterally supported point is commonly referred to as a fixed point (see figure 5-l).

d. Lateral loads. Lateral forces on embedded piles may produce high bending stresses and deflections. The behavior of short, rigid piles under lateral loads is discussed later in this chapter. The behavior of relatively flexible piles extending appreciably above ground surfaces and subjected to lateral loads is beyond the scope of this manual.

5-5. Column-stress formulas.

a. Slenderness ratio.

(1) ***Timber piles.*** The slenderness ratio (l_u/d) is the ratio of the effective unsupported length (1_u) to the average pile diameter (d). The average pile diameter is measured at a point one-third the distance from the butt of the pile. For the effective unsupported length of a single row of piles unbraced in the longitudinal direction, l_u is 0.7 of the distance from the fixed point to the top of the piles, as shown in figure 5-1. For a single row of piles adequately braced in the longitudinal direction, l_u is one-half the distance from the fixed point to the lowest bracing. For piles arranged in two or more rows and adequately braced between rows, the unbraced length is one. half the fixed point to the lowest bracing as shown in figure 5-1. If the ratio (l_u/d) is less than 11, then a buckling capacity need not be determined. If the ratio exceeds a value of 11, the buckling capacity must be determined. To avoid use of extremely slender piles, the value of l_u/d should not exceed 40. When the slenderness ratio is less than 11, the allowable load is based on table 2-2. When the slenderness ratio exceeds a value of 11, the allowable concentric axial load is computed as the lesser of the following.

$$Q_{all} = A\frac{0.3E}{(l_u/d)^2} \text{ for } \square \text{ column}$$

$$Q_{all} = A\frac{3.619E}{(l_u/r)^2} \text{ for } \phi \text{ column}$$

$$Q_{all} = AF_c$$

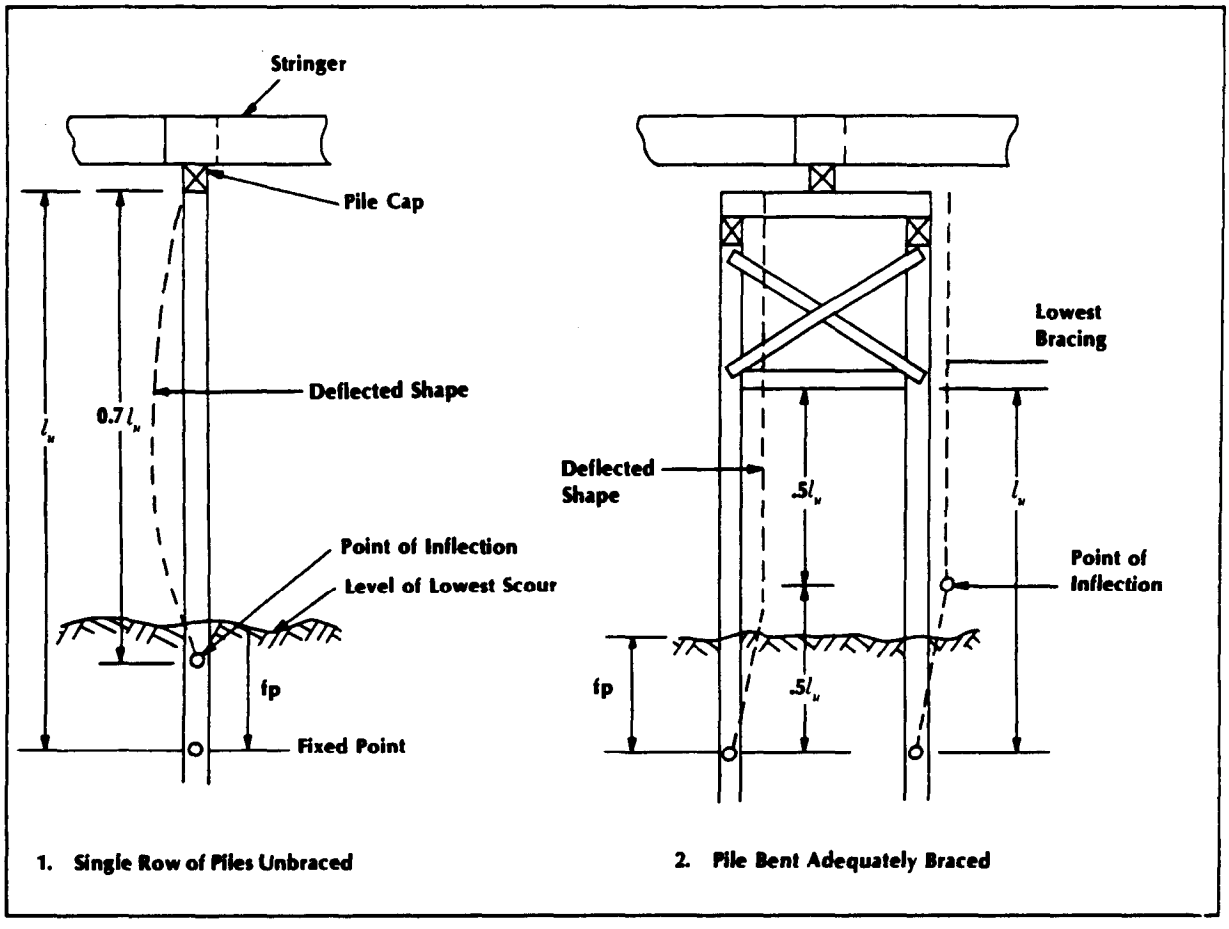

Figure 5-1 Unsupported length

where:

Q_{all} = allowable load on pile in pounds

A = cross-sectional area of the pile in square inches

E = modulus of elasticity of wood species in psi (table 2-2)

l_u = unsupported length in inches

d = average diameter in inches (measured at one-third of the pile length from the butt)

r = least radius of gyration in inches

F_c = allowable compression stress parallel to grain (table 2-2)

(2) ***Steel piles.*** The slenderness ratio of steel piles is the ratio of the unsupported length (1.) as described to the least radius of gyration(r). Tables and formulas for the radius of gyration are given in TM 5-312. The buckling capacity of steel piles must always be determined regardless of the numerical value of l_u/r. For the most economical design, the value of l_u/r should not exceed 120. For steel piles the allowable buckling load is calculated as follows.

$$Q_{all}\ A[23{,}000 - 0.7\ (l_u/r)^2]$$

where:

$$r = \sqrt{I/A}$$

A = area of steel pile in square inches

I = least moment of inertia in inches to the fourth power

Section III. DYNAMIC FORMULAS

5-6. Concept.

Dynamic pile formulas are based on the theory that the allowable load on a pile is closely related to the resistance encountered during driving. The concept assumes that the soil resistance remains constant during and after driving operations. This may be true for coarse-grained soils, but may be in error for fine-grained soils because of the reduction in strength due to remolding caused by pile driving. The formula of principal use to the military engineer is the Engineering News formula.

Caution
The Engineer News formula should be used only when designing piles with a bearing capacity of 50 kips (50,000 pounds) or less.

5-7. Engineering News formula

The allowable load on a pile may be estimated by one of the following versions of the Engineering News formula.

- Piles driven with a drop hammer.

$$Q_{all} = \frac{2WH}{s + 1}$$

- Piles driven with a single-acting air or steam hammer or open-ended diesel hammer.

$$Q_{all} = \frac{2WH}{s + 0.1}$$

- piles driven with a double-acting air or steam hammer or closed-ended diesel hammer.

$$Q_{all} = \frac{2E}{s + 0.1}$$

where:

Q_{all} = safe load in pounds

W = weight of striking parts in pounds

H = effective height of fall in feet

s = average net penetration or pile set, in inches, per blow for the last 6 inches of driving (A procedure for measuring the set follows.)

E = driving energy in foot pounds (This quantity may be obtained from tables 3-1 and 3-2.)

5-8. Pile set.

To determine the pile set, attach a piece of heavy paper to the pile at a convenient height (figure 5-2). Place a straightedge close to the paper supported by stakes spaced two feet on each side of the pile. Draw a pencil steadily

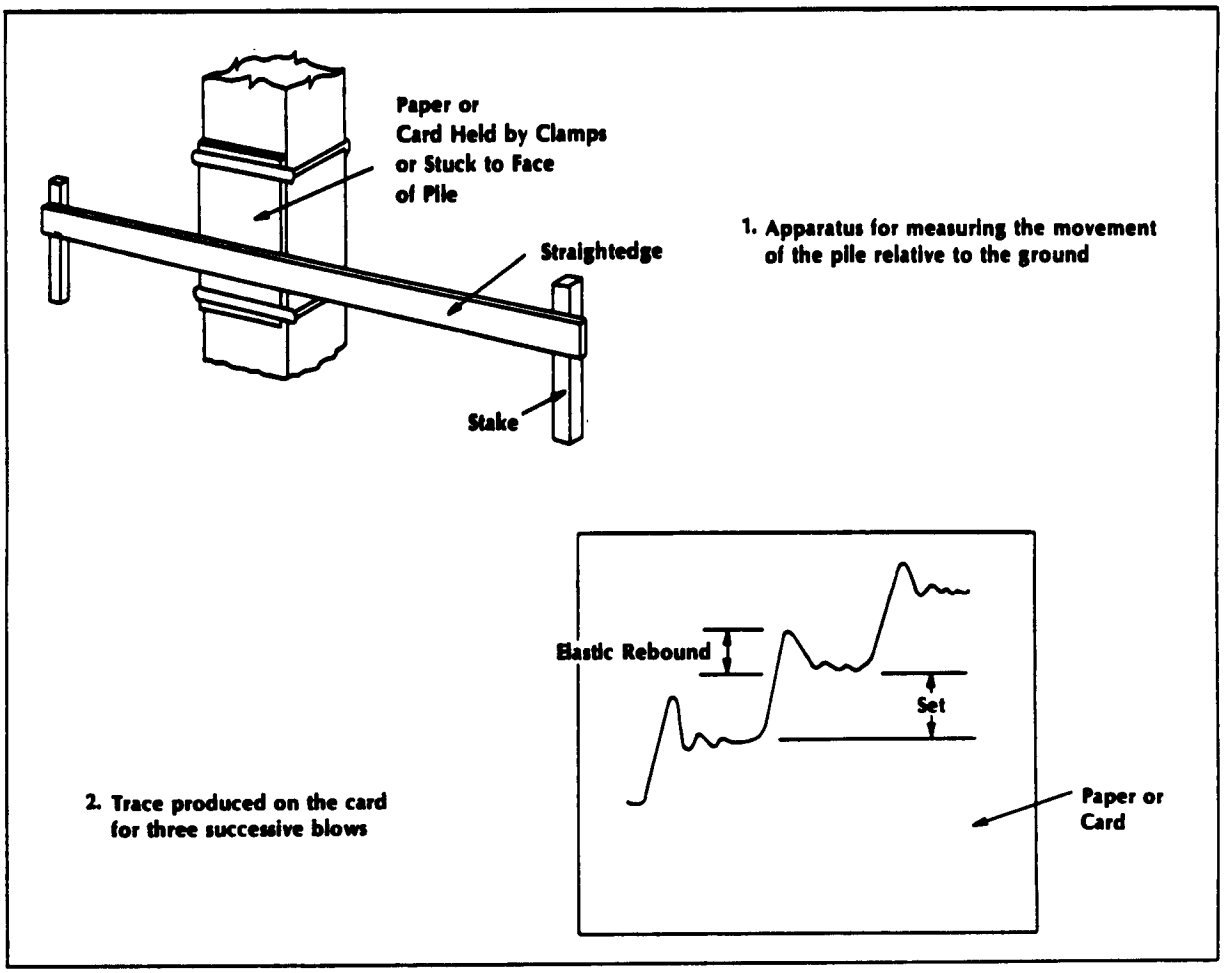

Figure 5-2 Measurement of pile set in field

across the straightedge while striking the pile with a series of blows. This trace will show the set of net penetration of the pile for a given blow of the hammer. For example, assume that a timber pile is driven by an 1,800-pound drop hammer with a height of fall equal to 6 feet. During the last 6 inches of driving, the average pile set is measured and found to be 0.25 inch. Using the Engineering News formula applicable to drop hammers, the allowable load is computed as follows.

$$Q_{all} = \frac{2 \times 1{,}800 \times 6}{0.25 + 1} = 17{,}280 \text{ pounds or } 8.6 \text{ tons}$$

5-9. Application.

The Engineering News formula provides conservative values in some cases and unsafe values in other cases. Reasonably reliable results are obtained for piles in coarse-grained soils. Generally, when time is available and the cost is justified, pile load tests should be used in conjunction with the dynamic formulas for estimating allowable pile loads. Using only the dynamic formula should be restricted to hasty construction and to projects where the cost of load testing would be too high in relation to the total cost of piles.

Dynamic formulas are useful in correlating penetration resistance obtained from local experience and in relating the results of load tests to the behavior of piles actually driven.

a. Saturated fine sands. In saturated fine sands, the formula usually indicates the allowable load as being less than that which may develop after driving. If time is available, a friction pile that has not developed its required load should be rested for at least 24 hours. The capacity may then be checked with at least 10 blows from a drop hammer or 30 blows with a steam, pneumatic, or diesel hammer. If the average penetration is less than that required by the formula to give the needed bearing capacity, piles do not require splicing or deeper driving. If the required capacity is not developed after the rest period, the piles must be spliced or additional piles driven, if the design of the foundation permits.

b. Jetting. The formulas do not apply to piles driven by the aid of jetting unless the pile is permitted to rest after jetting and then driven to final position without jetting. Data from the final driving may be used in the dynamic formula after resting the pile. The formulas do not apply to end-bearing piles driven to rock or other firm strata.

Section IV. STATIC FORMULAS

5-10. Driven piles.

Static pile formulas are based on the shear strength of the foundation soils. These formulas compute the ultimate bearing capacity and allowable load. Static pile formulas apply to piles in clay (figure 5-3) and to piles completely or partially embedded in cohesionless soil (figure 5-4). The shear strength must be determined from laboratory tests on undisturbed samples or estimated from correlations with the standard penetration test. The latter method is generally more reliable for cohesionless soils. Typical values of the undrained shear strength of cohesive soils are shown in table 5-1. The ultimate capacity of piles in cohesionless soils is influenced by the position of the groundwater table. Depending on the certainty with which subsoil conditions are known, the ultimate bearing capacity should be divided by a factor of safety from 1.5 to 2.0 to obtain the allowable load. For a given allowable load, the static formulas (figures 5-3, 5-4) also determine the required length of piles, the pullout capacities of piles, and the ultimate load buckle of slender steel piles in soft clay.

5-11. Drilled piles.

The allowable load on drilled piles is based on soils shear strength data and from formulas similar to those for driven piles. In clays, the average undisturbed shear strength over the depth of the pile should be multiplied by an empirical earth pressure coefficient, K_c, varying from 0.35 to 0.75 to account for softening. If the hole is allowed to remain open for more than a day or two or if a slurry is used during construction, the lower values should be used. In sands, the coefficient of earth pressure, K_c, should be taken as 1.0. The allowable end-bearing capacity, Q_d,, can also be computed using the standard penetration test results in terms of N blows per foot.

$$Q_{all} = 1.25\,(N - 3)\,\frac{b+1}{2b}$$

where:

b = diameter of pier in feet

N = number of blows per foot

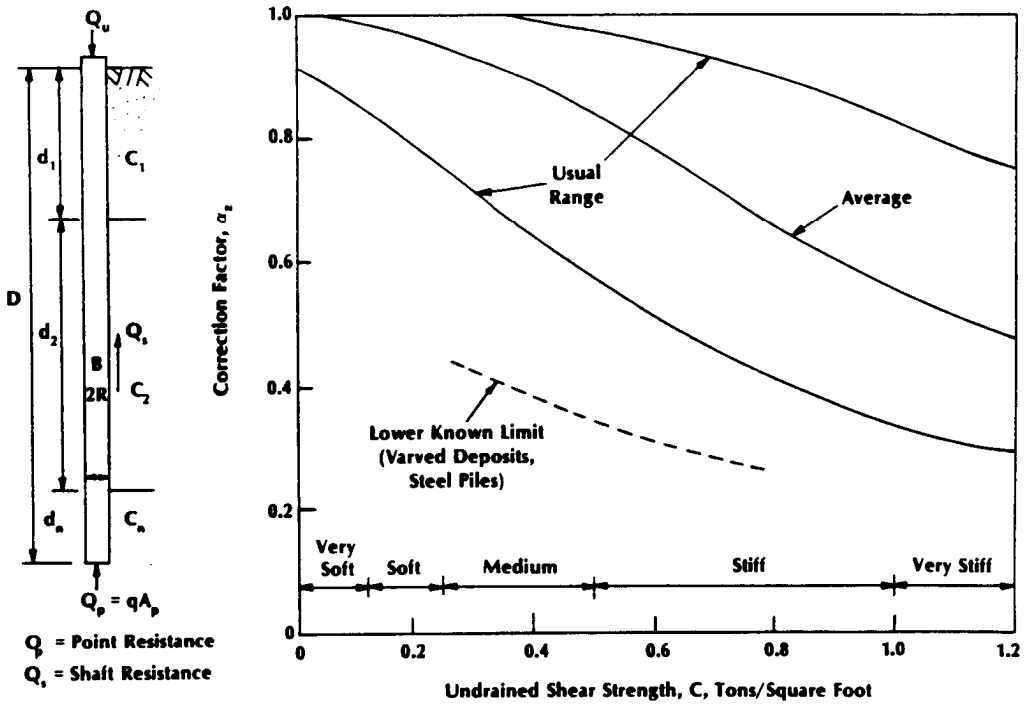

Q_u = Ultimate Bearing Capacity

$Q_u = Q_p + Q_s = qA_p + \Sigma c_n d_n P$

q = Unit Bearing Capacity = 9 C_n (Tons/Foot²)

A_p = Area of Point = πR^2 for Round Piles (Foot²)
= B^2 for Square Piles

$C_1 C_2 C_n$ = Undrained Shear Strengths for Various Strata (Tons/Foot²)

α_z = Correction Factor (See Graph Above)

P = Perimeter = $2\pi R$ for Round Piles (Foot)
= 4 B for Square Piles

Notes: Position of Groundwater Table Has No Effect on Ultimate Bearing Capacity, Unless Cohesion Is Changed. Point Resistance Should Be Ignored Except in Stiff or Very Stiff Clays.

Pullout Capacity = $T_u = (C_1 \alpha_z d_1 + C_2 \alpha_z d_2 + C_n \alpha_z d_n)P$ (Tons)

Ultimate Load for Buckling of Slender Steel Piles in Soft Clay

$Q_u = \lambda (C\ E\ I)^{1/2}$ (Pounds)

λ = .8 for Very Soft Clay, 1.0 for Soft Clay (Dimensionless)

C = Average Undrained Shear Strength of Soil Layer (PSI)

I = Least Moment of Inertia of Cross Section (Inches⁴)

E = Modulus of Elasticity of Steel (29,000,000 PSI)

Note: Heavy Steel Piles, Timber Piles, or Concrete Piles Are Generally Not Subject To Buckling If Embedded in Soil for Their Entire Length.

Figure 5-3 Static analysis of piles in cohesive soils

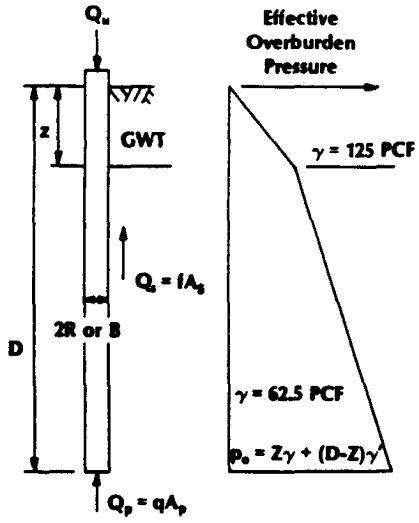

Q_s = Shaft Resistance
Q_p = Point Resistance

Q_u = Ultimate Bearing Capacity

$Q_u = Q_p + Q_s = qA_p + fA_s$

q = Unit Bearing Capacity = $P_o N_q$
A_p = Area of Point
f = Unit Frictional Resistance = $\frac{1}{2} K p_o \tan\delta$
δ Angle of Shaft Resistance
N_q = Bearing Capacity Factor
A_s = Shaft Area = $2\pi R$ D for Round Pile
= 4 B D for Square Pile
p_o = Effective Overburden Pressure at Tip of Pile
= γD for Groundwater Table (GWT) Below Pile
= $\gamma' D$ for GWT at Ground Surface
K_C = Earth Pressure Coefficient, Compression Pile
K^T = Earth Pressure Coefficient, Tension Pile
Note: A_p and A_s Based on Minimum Periphery for H-Pile.
γ = Unit WGT of Soil (PCF)
γ' = Submerged Unit WGT of Soil = γ - 62.5 (PCF)

Description	SPT Number N	Approx Angle of Internal Friction, $\phi°$	N_q	$\delta°$ Steel	$\delta°$ Concrete Timber
Very Loose					
Loose	4	20	22	20	22
Medium	10	30	30	21	24
Dense	30	36	50	25	29

Pile Type	K^c	K^T
Single H-Piles	1.0	0.5
H-Piles in Group	1.2	0.7
Single Displacement Piles, Concrete Timber	1.5	1.0
Displacement Piles in Group	2.0	1.3
Displacement Piles Jetted	0.9	0.6

Pullout Capacity = $T_u = A_s f = A_s K^T \frac{P_o}{2} \tan\delta$

1. Complete Embedment of Piles in Cohesionless Soils

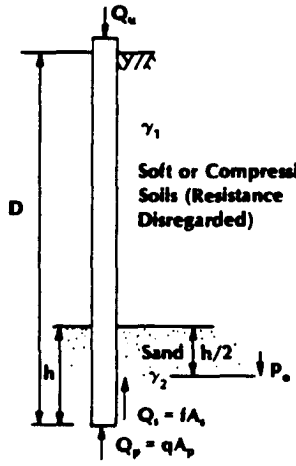

$Q_u = Q_p + Q_s = qA_p + fA_s$

Definitions and Analysis Same as Above except That Effective Overburden Pressure is Computed Midpoint of Embedment Depth in Cohesionless Stratum in Computing f. Also

$f = K^c p_o \tan\delta$ for Compression Piles

$f = K^T p_o \tan\delta$ for Tension Piles

$P_o = (D-h)\gamma_1 + \left(\frac{h}{2}\right)\gamma_2$

A_s = Shaft Area = 2 Rh for Round Pile
= 4 Bh for Square Pile

Pullout Capacity = $T_u = A_s K T \frac{P_o}{2} \tan\delta$

Note: Shaft resistance in soft soils may be partly effective for transient loads.

2. Partial Embedment of Piles in Cohesionless Soils

Figure 5-4 Static analysis of piles in cohensionless soils

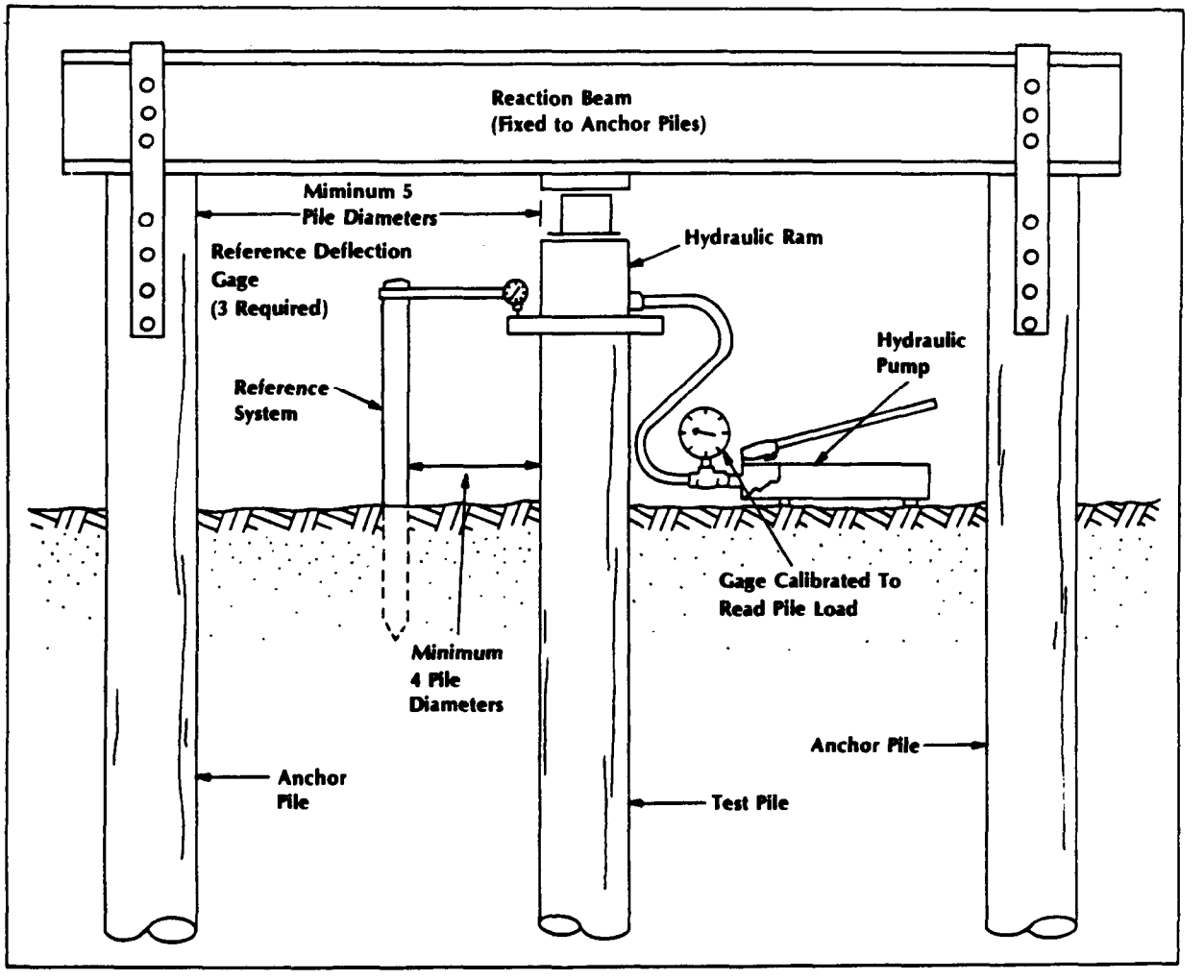

Figure 5-5 Typical pile load test setup

Section V. PILE LOAD TESTS

5-12. Equipment.

Load tests determine the allowable load, the settlement under working load, or the soundness of a pile. Load tests may be conducted in compression or tension. Lateral load tests are seldom justified. The following considerations must be made.

- The test piles should be of the same type and driven by the same equipment as for construction.
- Test loading should not be initiated less than 24 hours after driving piles in cohesionless soils and not less than 7 days in cohesive soils.
- The load is usually applied by a hydraulic jack reacting against dead weights or against a yoke fastened to a pair of anchor piles (figure 5-5). Anchor piles should beat least 5 test pile diameters from the test pile.
- The test load should be twice the proposed design load as estimated from the dynamic formula, static formula, or other means.

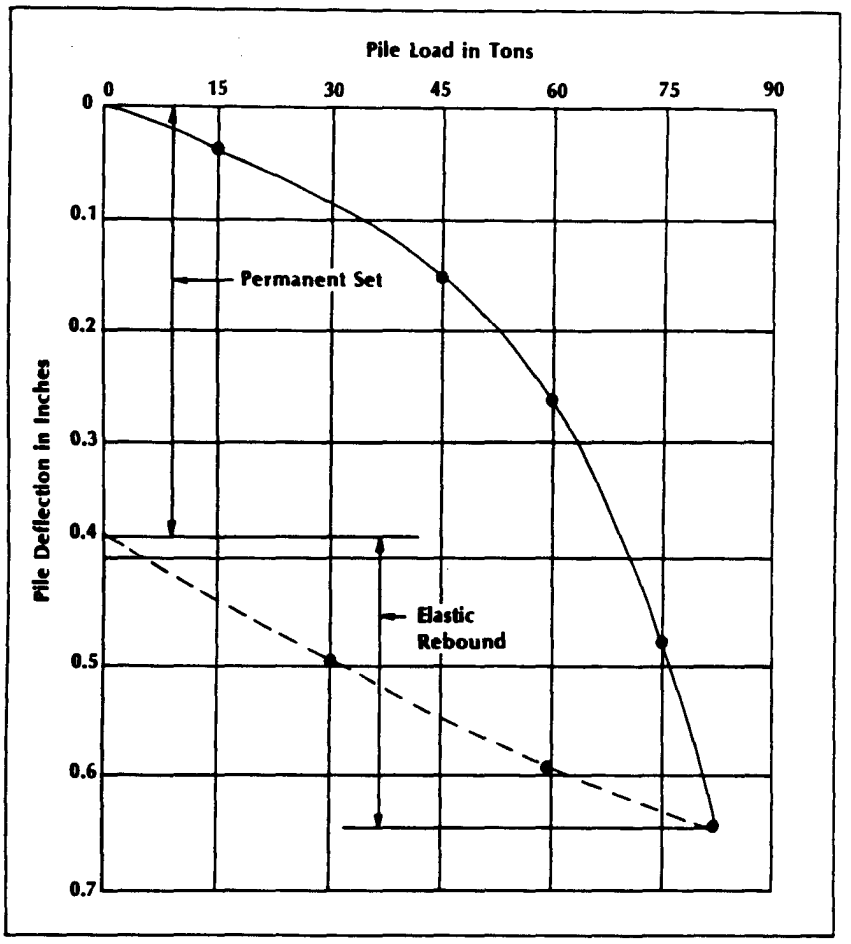

Figure 5-6 Typical load-deflection curve

- Readings of settlement and rebounds should be referred to a deep benchmark and recorded to 0.001 feet.

5-13. Procedures.

The loading procedure may be carried out either by the continuous load method or the constant rate of penetration (CRP) method.

a. Continuous load. The load is applied in seven increments, equal to ½, ¾, 1, 1¼, 1 ½, 1¾, and 2 times the allowable load assumed for design. The load is maintained constant at each increment until there is no settlement in a 2 hour period. The total test load should remain in place until settlement does not exceed 0.002 feet in 48 hours. The total load should be removed in decrements not exceeding one fourth of the total test load with intervals of not less than one hour. The rebound should be recorded after each decrement is removed. A curve may then be prepared showing the relationship between the load and deflection (figure 5-6). This procedure is most reliable where it is necessary to estimate the settlement of piles under the design load. The allowable load is taken as one half that which caused a net settlement of not more than ½ inch or gross

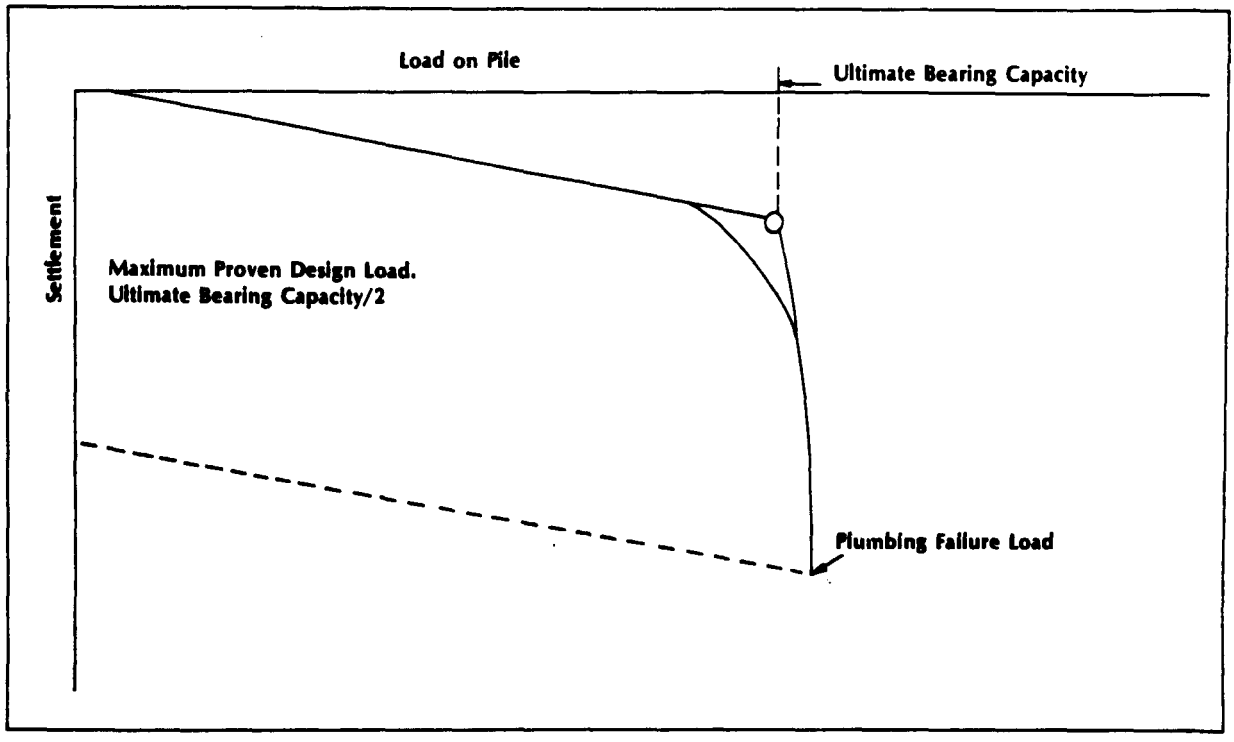

Figure 5-7 Interpretation of CRP test results

settlement of 1 inch, whichever is less. The continuous load method is rarely justified in military construction because of the excessive time requirements.

b. Constant rate of penetration. The pile is jacked into the ground at a constant rate, and a continuous record of the load and deformation is taken. The test proceeds rapidly and requires the services of several observers. Results of the test are not too ***sensitive to*** the rate of penetration. The load is increased until the pile fails by plunging or the capacity of the equipment is reached. Results of the test are plotted (figure 5-7). The allowable load is considered to be 50 percent of the ultimate bearing capacity defined by the intersection of lines drawn tangent to the two basic portions of the load settlement curve. The constant penetration rate method, a very rapid test, is particularly suited for military construction.

6-14. Bearing stratum resistance.

Where piles are driven through compressible soil strata into a bearing stratum of sand or other firm material, the allowable pile load is based on the carrying capacity of the bearing stratum without depending on the short-term frictional resistance of the compressible soils (figure 5-4). With pile load tests, it is generally not possible to distinguish between the short-term carrying capacity of the compressible soil and the long-term carrying capacity of the bearing stratum. The capacity of the bearing stratum can be obtained by testing the pile inside the hollow casing or by making a load test on two piles driven about 5 feet apart. One pile is driven to refusal in the bearing stratum while the other is driven to within 3 feet of the bearing stratum. The difference in the ultimate loads for the two piles is equal to the carrying capacity of the bearing stratum.

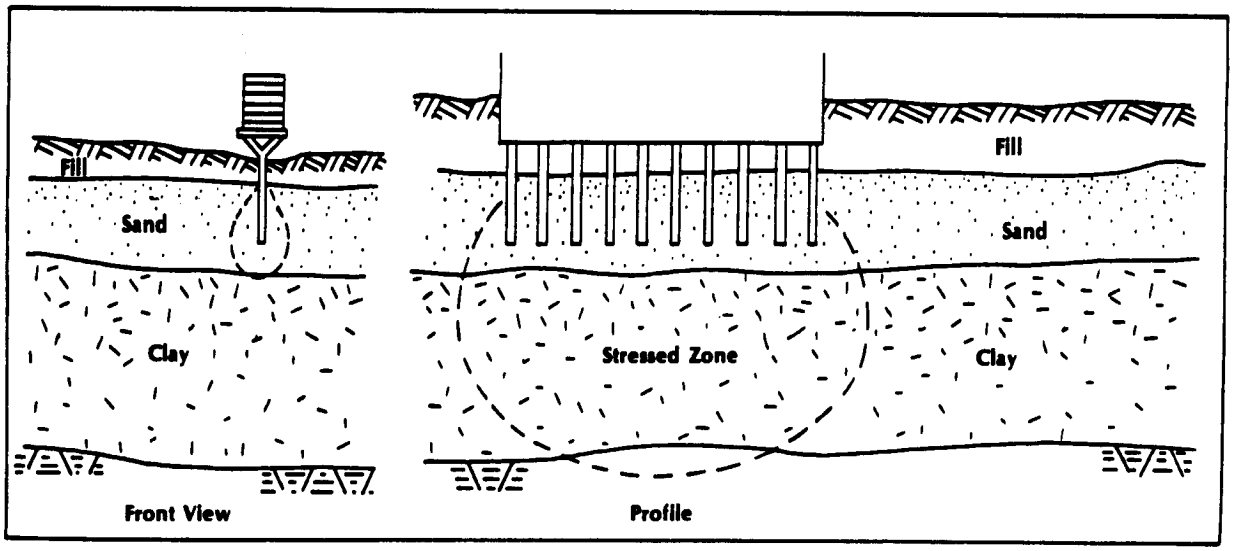

Figure 5-8 Effects of group action on size of stressed zone

5-15. Limitations of pile load tests.

Pile load tests do not take into account the effects of group action on bearing capacity unless a group of piles is loaded. The settlement of a pile group is not generally related to the settlement recorded during a load test on a single pile. Settlement must be estimated as discussed in chapter 6 from consideration of soil compressibility within the zone of the influence (figure 5-6).

5-16. Lateral loads resistance.

a. Lateral loads. Vertical piles supporting structures are subjected to lateral forces. For example, a pile bent supporting a highway bridge may be subjected to the forces of wind, current, ice, and the impact of floating objects. Similar forces may act on waterfront structures, such as wharves and piers. Properly designed bracing, supplemented by batter piles and fenders, will usually provide the structure with sufficient stability to resist lateral loads. The piles must be driven deep enough to prevent the structure from overturning. Normally, vertical piles driven deep enough to sustain vertical loads will develop enough lateral resistance to prevent the structure founded on a number of piles from overturning. An exception to this could be a bridge foundation in an area subject to scour during periods of high water. When piles are subjected to lateral loads in excess of 1,000 pounds per pile, it is usually more economical and desirable to provide batter piles. Lateral loads apply to both rigid and flexible piles (figure 5-9).

b. Flexible and rigid piles. It is difficult to estimate the resistance provided by a single vertical pile (or group of piles) to lateral forces. The best method is to conduct field loading tests. If time and facilities for this are lacking, the embedment or lateral capacity may be estimated by the use of charts (figures 5-10, 5-11) that apply to fixed-end and free-head short, rigid piles. The effect of group action is ignored in these charts. For the fixed-head pile, failure occurs when the pile moves as a unit through the soil. For the free-head pile, failure occurs when the pile rotates as a unit through the soil around a point located below the ground surface. Theoretical

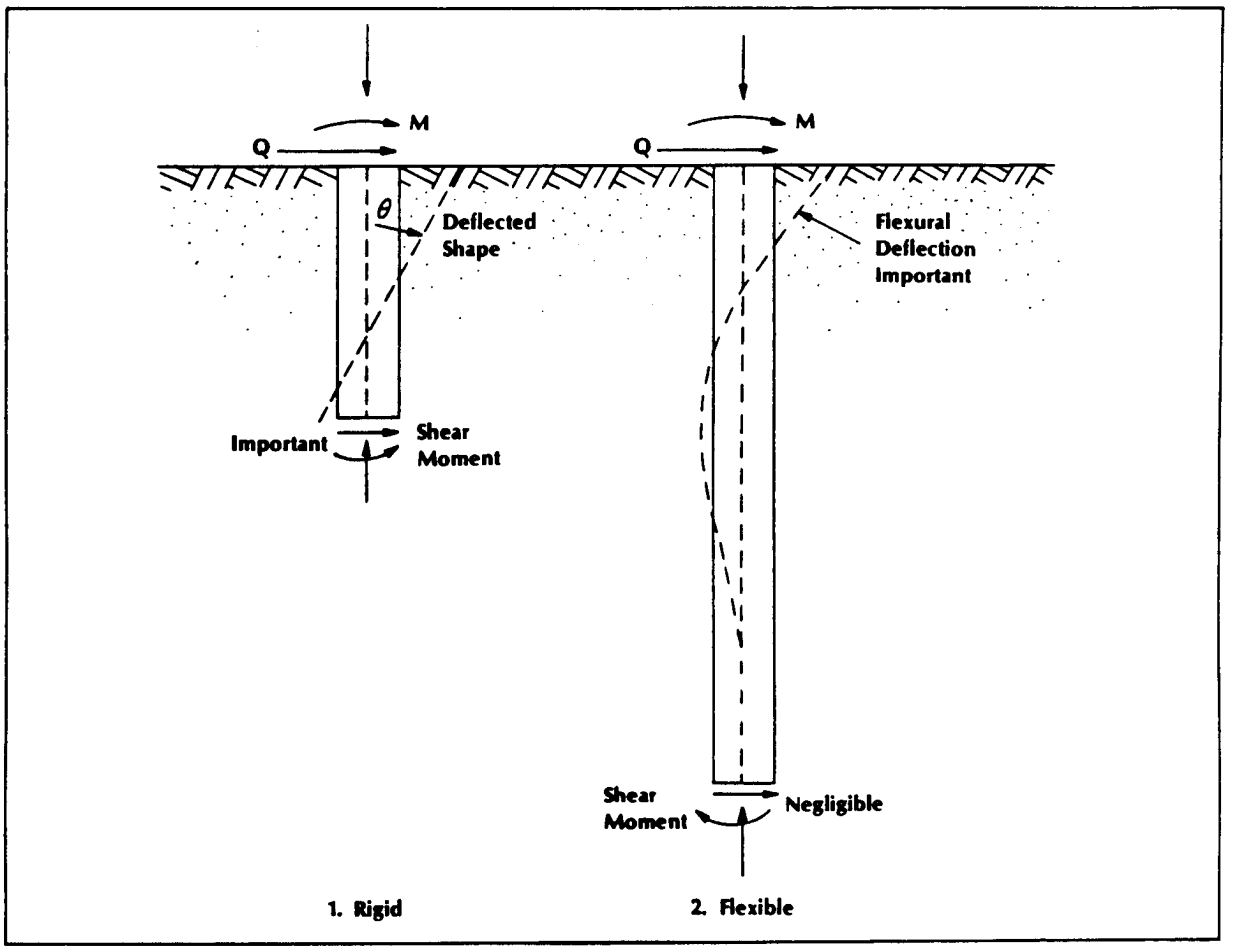

Figure 5-9 Distinction between rigid and flexible pile or pier

analysis has been developed and is available for laterally loaded piles in which the flexibility of the pile is considered.

(1) ***Rigid piles in clay.*** Figure 5-10 shows the relationship between the ultimate lateral resistance and length of embedment for fixed-end and free-head piles in clay soils in terms of the undrained shear strength (table 5-l). As the shear strength of the soil near ground surface depends on seasonal variations in water content, it is good practice to reduce laboratory values by one-third to one-fourth. A safety factor from 1.5 to 2.0 should be applied to the design lateral load to compute the ultimate lateral resistance. Continuous lateral loads should be resisted by batter piles.

(2) ***Rigid piles in sand.*** Figure 5-11 shows the relationship between the ultimate lateral resistance and length of embedment for fixed-end and free-head piles in sands in terms of coefficient of passive earth pressure, K_p, assumed equal to 3.0 regardless of the density of the sand. Safety factors from 1.5 to 2.0 should be applied to the design lateral load to compute the ultimate lateral resistance.

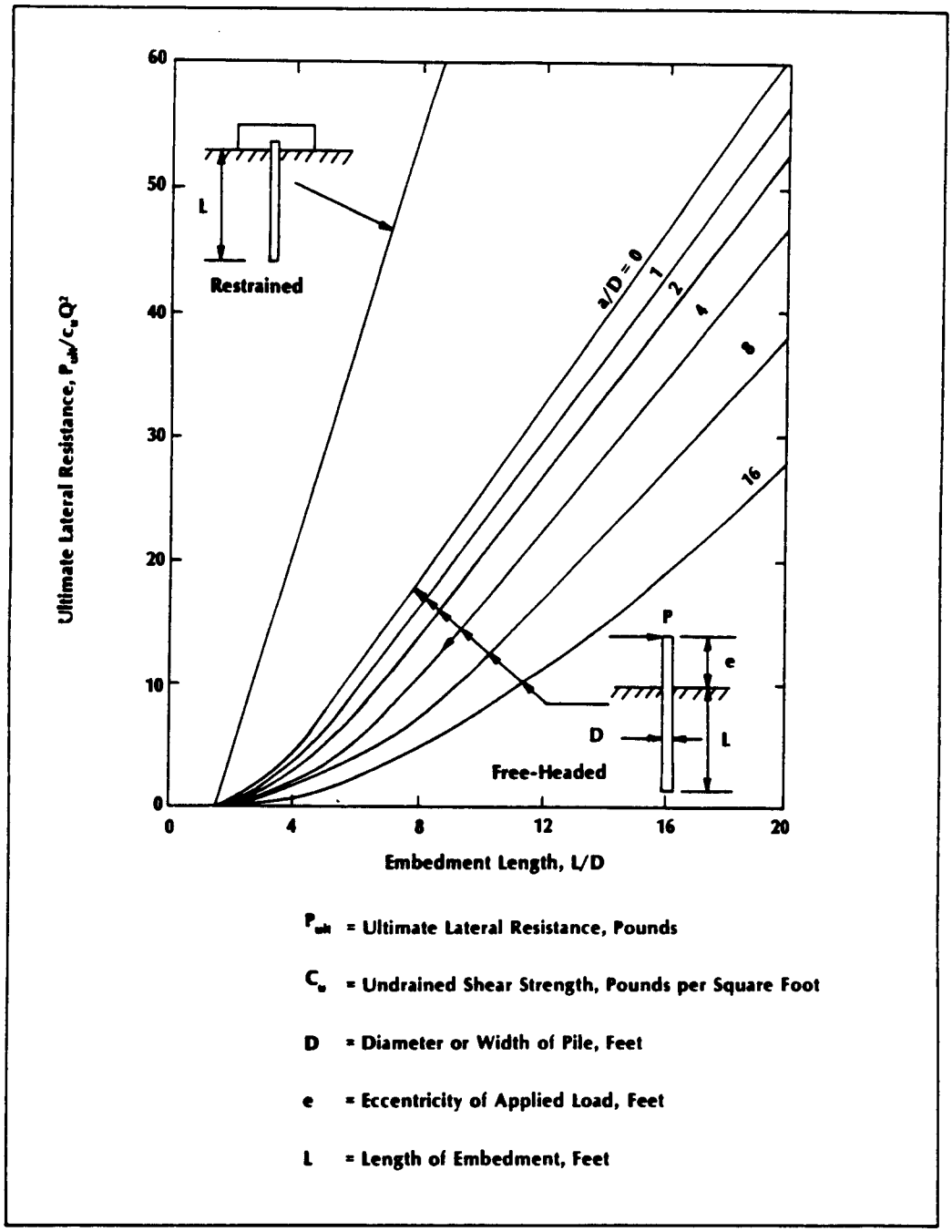

Figure 5-10 Ultimate lateral resistance of rigid piles in clay

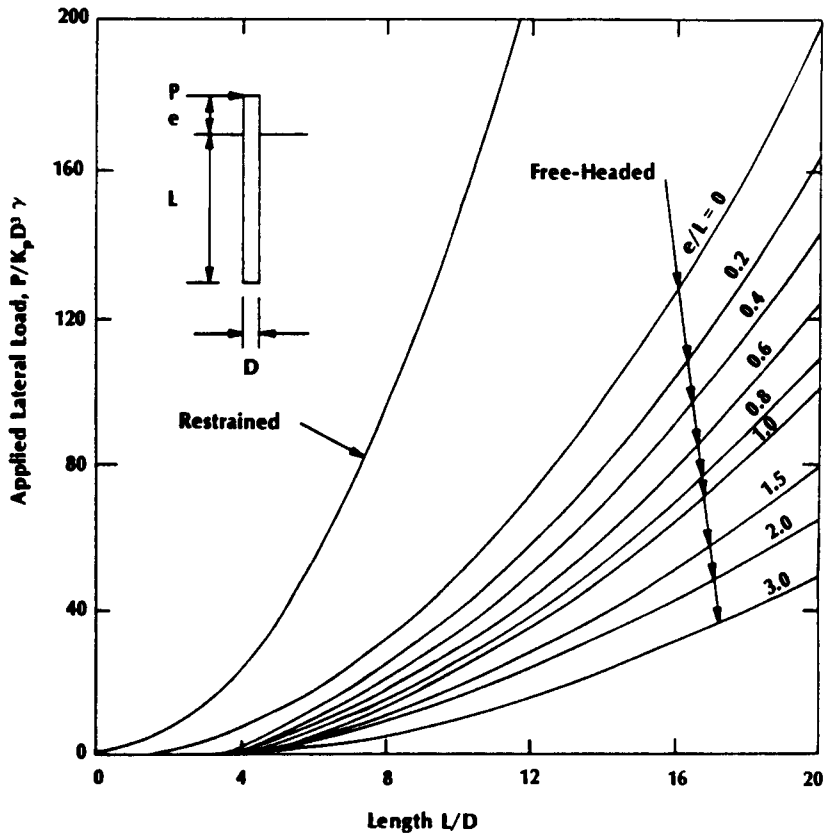

P_{ult} = Ultimate Lateral Resistance, Pounds

K_p = Coefficient of Passive Earth Pressure

γ = Unit Weight of Soil, Pounds per Cubic Foot

= 125 Pounds per Cubic Foot Above the Water Table

= 62.5 Pounds per Cubic Foot Below the Water Table

D = Diameter or Width of Pile, Feet

e = Eccentricity of Applied Load, Feet

L = Length of Embedment, Feet

Figure 5-11 Ultimate lateral resistance of rigid piles in sand

TABLE 5-1. STRENGTH OR CONSISTENCY OF UNDISTURBED CLAYS

Descriptive Term	Field Test	SPT* Blows per Foot	Undrained Shear Strength Pounds/Square Foot
Very Soft	Squeezes between fingers when fist is closed	0 - 1	0 - 250
Soft	Easily molded by fingers	2 - 4	250 - 500
Medium	Molded by strong pressure of fingers	5 - 8	500 - 1000
Stiff	Dented by strong pressure of fingers	9 - 15	1000 - 2000
Very stiff	Dented only slightly by finger pressure	16 - 30	2000 - 4000
Hard	Dented only slightly by pencil point	Over 30	4000

*Standard Penetration Test
(Measured with 1½ inch ID sampler driven 1 foot by 140-pound hammer falling 30 inches)

CHAPTER 6
PILE FOUNDATIONS

Section I. GROUP BEHAVIOR

6-1. Group action. Piles are most effective when combined in groups or clusters. Combining piles in a group complicates analysis since the characteristics of a single pile are no longer valid due to the interactions of the other group piles. The allowable load of a single pile will not be the same when that pile is combined in a cluster or in a group. There is no simple relationship between the characteristics of a single isolated pile and those of a group. Relationships depend on the size and other features of the group and on the nature and sequence of the soil strata. The ultimate bearing capacity of a group of piles is not necessarily equal to the ultimate bearing capacity of a single isolated pile multiplied by the number of piles in the group.

- Only in certain cases (for example where the group compacts the soil) will the ultimate bearing capacity of the group be greater than the number of piles times the ultimate bearing capacity.

- For end-bearing piles on rock or in compact sand or gravel with equally strong material beneath, the ultimate bearing capacity of the group will be essentially equal to the number of piles times the ultimate bearing capacity.

- For piles which rely on skin friction in a deep bed of cohesive material, the ultimate bearing capacity of a large group maybe substantially less than the number of piles times the ultimate bearing capacity.

6-2. Driving.

a. Effects on the soil. When piles are installed in groups, consideration should be given to their effects on the soil. Heave and lateral displacement of the soil should be limited by the choice of a suitable type of pile and by appropriate spacing. Some soil, particularly loose sands, will be compacted by displacement piles. Piles should be installed in a sequence which avoids creating a compacted block of ground into which additional piles cannot be driven. Similar driving difficulties may be experienced where a stiff clay or compacted sand and gravel have to be penetrated to reach the bearing stratum. This may be overcome by first driving the center piles of a group and working outwards, but it is frequently more convenient to begin at a selected edge and

work across the group. In extreme cases, it may be necessary to predrill through a hard upper stratum. If the group is confined by sheet piling which has already been driven, it may be preferable to drive from the perimeter inward to avoid displacemer of the sheet piling.

b. Effects on adjacent structures. When piles are to be driven for a new foundation alongside an existing structure, care must be taken to insure that the existing structure is not damaged by the operation. Settlement or heave caused by pile driving may seriously damage the foundations of nearby structures. For example, piles driven behind a retaining wall can increase the pressure on the wall. This increase in pressure maybe caused by densfication of a granular soil by vibration, or a plastic soil may actually be forced against the wall. To avoid or minimize the effects of vibration, the pile may be driven in a predrilled hole or jetted or jacked into place. The jetting itself could have a detrimental effect upon the soil beneath an existing structure.

6-3. Spacing.

Piles should be spaced in relationship to the nature of the ground, their behavior in groups. and the overall cost of the foundation. The spacing should be chosen with regard to the resulting heave or compaction. Spacing should be wide enough for all piles installed to the correct penetration without damaging adjacent construction or the piles themselves. For piles founded on rock, the minimum center-to-center spacing is 2 times the average pile diameter, or 1.75 times the diagonal dimension of the pile cross section, but not less than 24 inches. An optimum spacing of 3 times the diameter of the pile is often used. This allows both adequate room for driving and economical design of the pile cap.

Section II. GROUND CONDITIONS

6-4. Rock.

Site investigation should establish whether the underlying rock surface is level, inclined, or irregular. It should also determine the thickness of decomposed rock which the pile should penetrate. If the surface is inclined, driven piles may have to be pointed. The upper load limit of a pointed pile embedded in sound rock may be the allowable compressive stress of the material in the pile. If the overlying material is saturated plastic clay, displacement piles and consequent volume changes may heave piles already driven.

6-5. Cohesionless soils.

a. Piles driven into dense sand. Piles are driven through the soft materials and into a dense, deep stratum of sand to develop adequate carrying capacity. If the sand is moderately loose, the required penetration may be deep. If the sand is dense, penetration may be only a few feet. Skin friction of compressible soil is not considered since it will disappear in a period of time. The entire load will then be carried by the firm stratum (figure 5-3).

(1) *Point resistance.* Point resistance can be found using calculations and laboratory tests (chapter 5, section IV). It can also be determined approximately by making a load test on two piles driven about 5 feet apart. One pile is driven to refusal in the firm bearing stratum while the other is driven until its point is 3 feet above the surface of the bearing stratum. If both piles are loaded at equal rates, the effect of time on skin friction can be eliminated. The point resistance is equal to the difference between the ultimate bearing capacities of the two piles.

(2) *Depth estimate.* The depth to which piles must extend into the sand can be estimated on the basis of driving tests combined with load tests or, in the case of small projects, calculations using dynamic or static formulas.

b. Compaction piles. Compaction piles densify the sand. The design load for compaction piles is conservative. The piles are driven to equal penetration with each hammer stroke. The hammer strokes wil1 be progressively shorter as work continues because the sand becomes more compacted by driving the preceding pile. Driving resistance increases as each pile is driven because of the compaction of the soil.

(1) *Driving loads.* On small jobs, loads of 20 tons are usually assigned to compaction piles of timber and 30 tons to precast concrete. The piles should be driven to the capacities indicated by the Engineering News formula (chapter 5, section III). On large jobs, a test group of several piles should be driven. The center pile should be driven first to a capacity indicated by the Engineering News formula. When the entire group of piles has been driven, the center pile should be redriven, and its capacity determined by the formula. The difference between the 2 computed capacities reflects the effects of densification. A load test on the center pile after redriving may be used to check the accuracy of the computed capacity.

(2) *Length.* The length of compaction piles decreases markedly with increasing *taper.* Piles from 20-ton to 30-ton capacity having a taper of 1 inch to 2 ½ feet can seldom be driven more than 25 feet in loose sands.

c. Piles for preventing scour. Scour, which results from currents, floods, or ship-propeller action, will significantly reduce the functional resistance of a pile. The bases of bridge piers located near river channels must be established below the level to which the river bottom is removed by scour during floods. In many cases, the depth of the river increases faster during floods than the crest rises. As bridges are located where the channel is narrow, the depth of scour is likely to be greater than average. Furthermore, the construction of the bridge usually causes additional constriction of the channel and itself increases the depth of scour. Depths of scour can be as much as 4 feet for each 1 foot of rise. For military construction, a reasonable design estimate is a depth of scour equal to 1 foot for each foot of rise of the water. Scour can be minimized by surrounding the pile foundation with sheet piles or providing riprap protection around the base of the pier (refer to TM 5-312).

d. Group behavior. The ultimate bearing capacity of pile groups in cohesionless soil is equal to the number of piles times the ultimate bearing capacity of an individual pile, provided the pile spacing is not less than three pile diameters. A pile group in cohesionless soil settles more than an individual pile under the same load (figure 6-l). Ordinarily, driving to a resistance of 20 tons for timber piles or 30 tons for concrete piles as determined by the Engineering News formula will insure that settlements are within tolerable limits. Piles driven into a thick bearing stratum of dense, cohesionless materials should not settle provided correct safety and engineering analysis have been followed.

e. Uplift resistance. The total uplift resistance of a pile group is the smaller of the following.

- The uplift resistance of a single pile times the number of piles in the group.
- The uplift capacity of the entire pile group as a block (figure 6-2), which is the

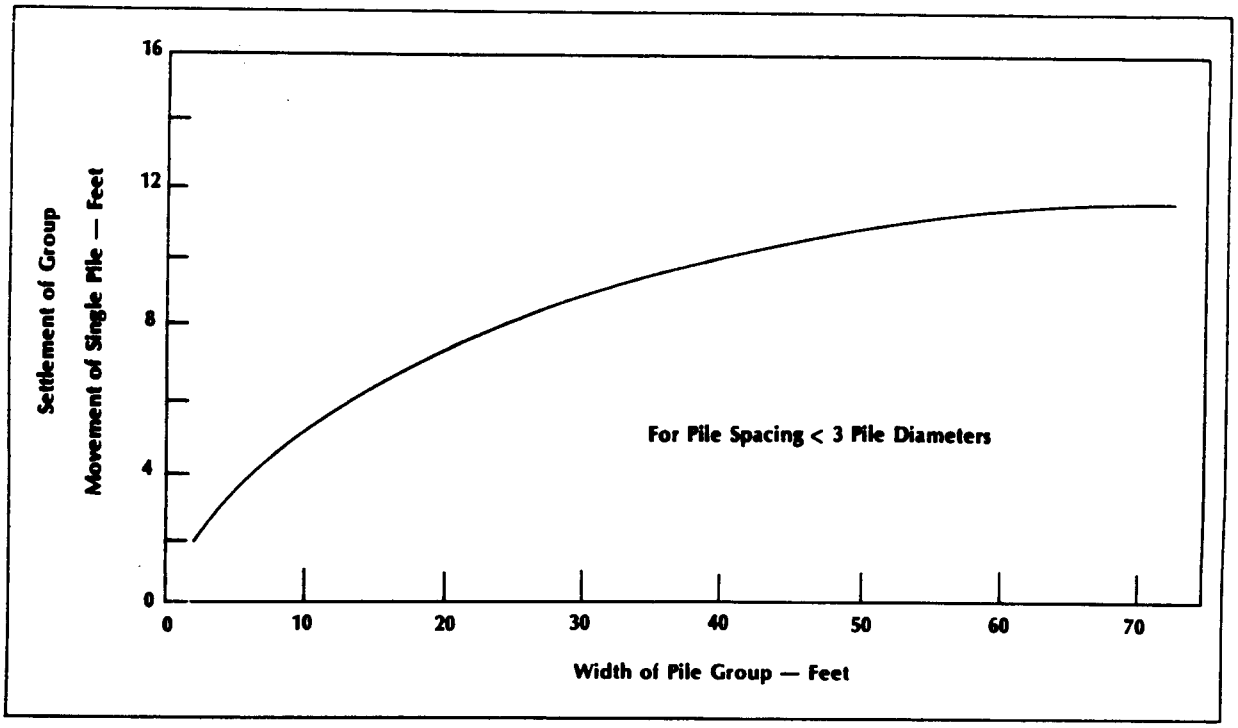

Figure 6-1 Estimated settlement of pile groups in sand

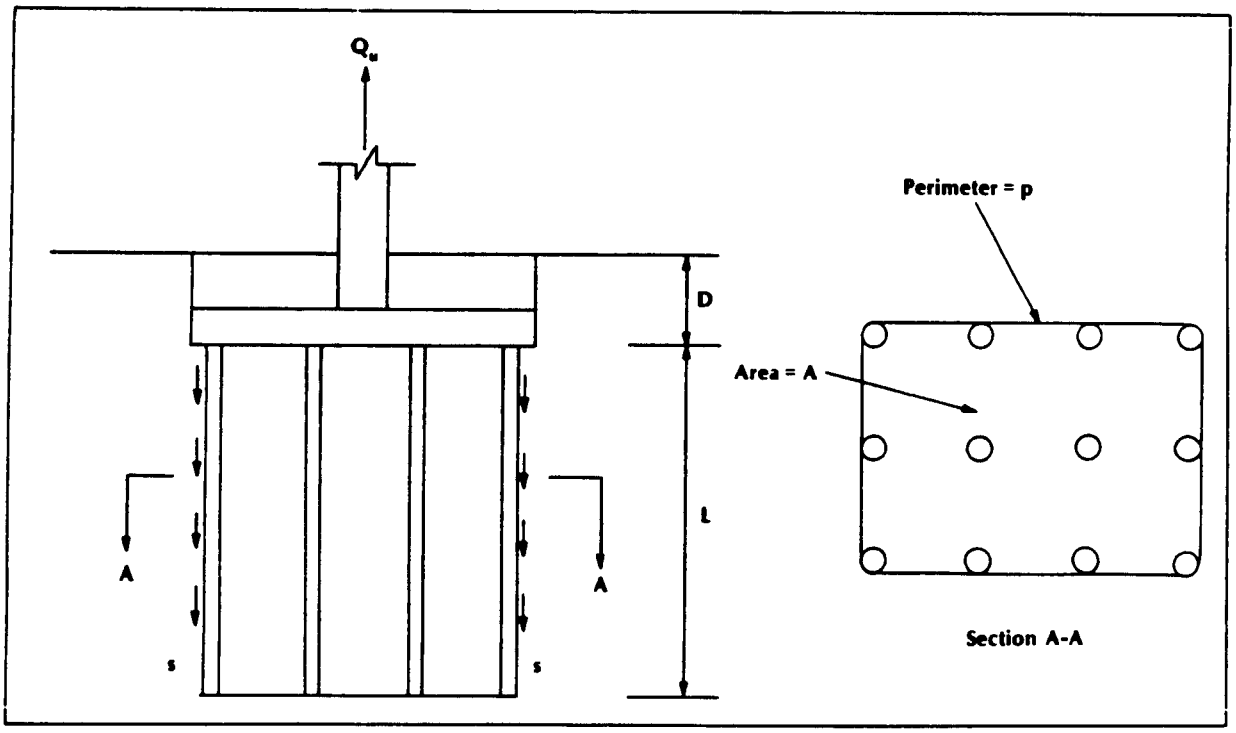

Figure 6-2 Uplift capacity of pile group

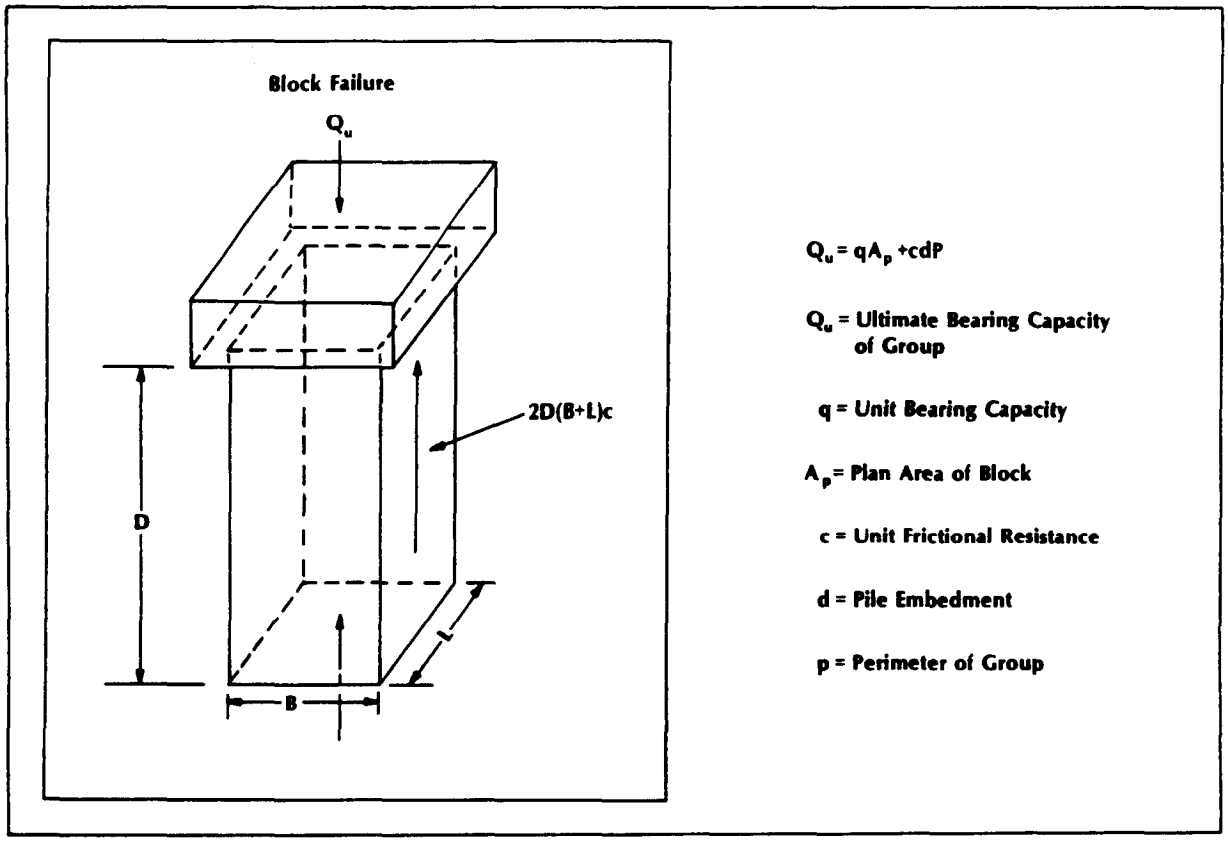

Figure 6-3 Block failure of piles in clay

sum of the weight of the pile cap, the weight of the block of soil (using buoyant weights below the water table), and the frictional resistance along the perimeter of the block.

f. Driving. The driving resistance of sands does not indicate the true resistance of the pile. If the sands are loose, pore pressures allow the piles to penetrate with little resistance. However, with time these pore pressures will dissipate; and redriving or subsequent load tests will indicate a greater soil resistance. If the materials are dense, initial driving may cause negative pore pressure, making driving hard. As these pressures dissipate, both resistance and load values lower. Redrive tests should be performed when excessively high or low driving resistances are encountered.

6-6. clay.

a. Group action. Piles driven in clay derive their capacity from friction. They are commonly driven in groups or clusters beneath individual footings or as single large groups beneath mats or rafts. The bearing capacity of a pile cluster maybe equal to the number of piles times the bearing capacity per pile, or it may be much smaller because of block failure (figure 6-3). The load on a group of piles may be sufficient to cause block failure. Block failure generally can be eliminated if the pile spacing is equal to or greater than three pile diameters.

b. Settlement. The need to limit settlement will govern design of piles in clay. Procedures for computing foundation settlement are presented in TM 5-545. Stress distribution

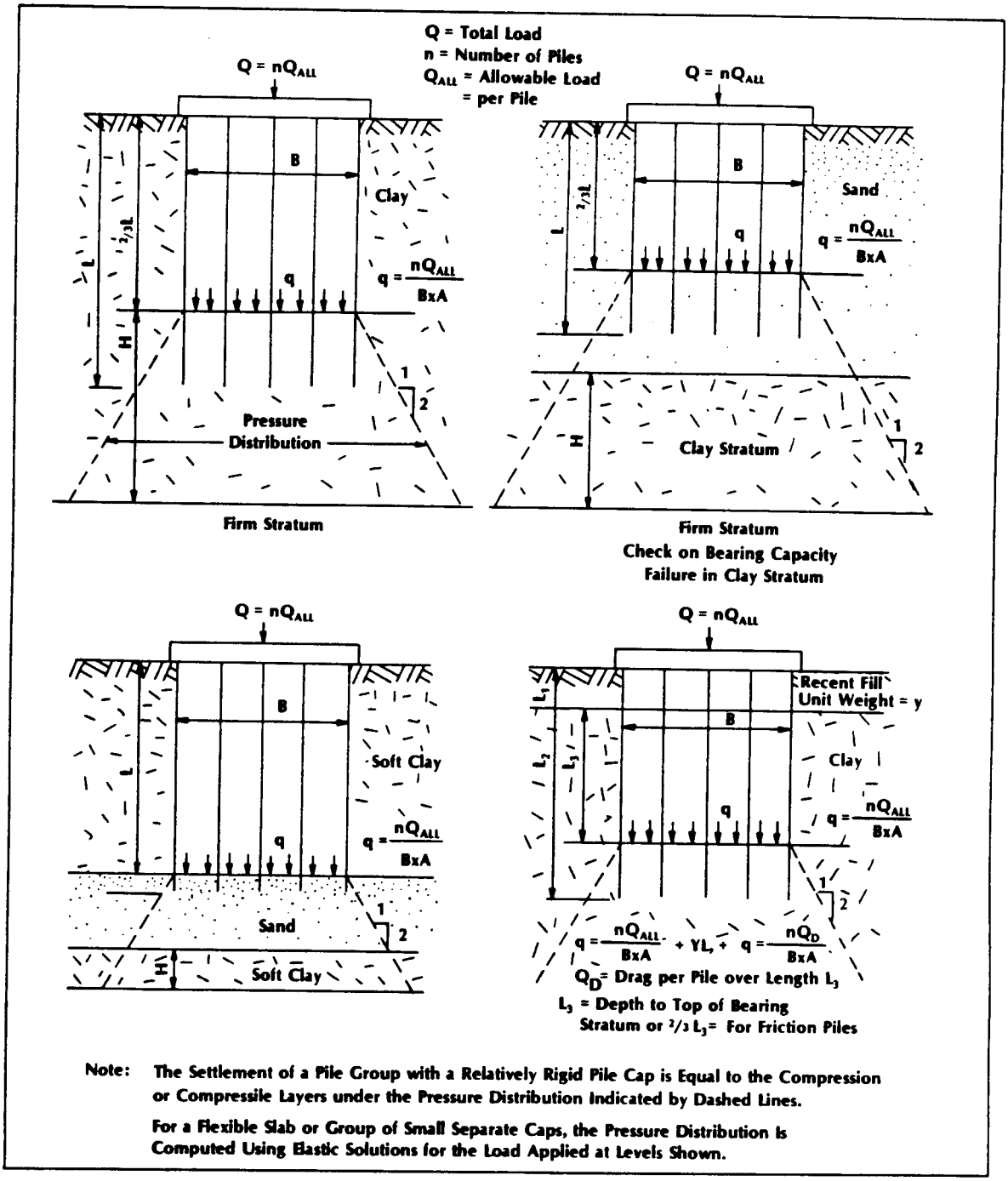

Figure 6-4 Approximate distribution of stress beneath pile foundations

requirements may be found by analyzing the settlement of pile groups (figure 6-4). The reduction in settlement provided by friction piles is generally small, and therefore alternate types of shallow foundations should be considered in lieu of friction piles.

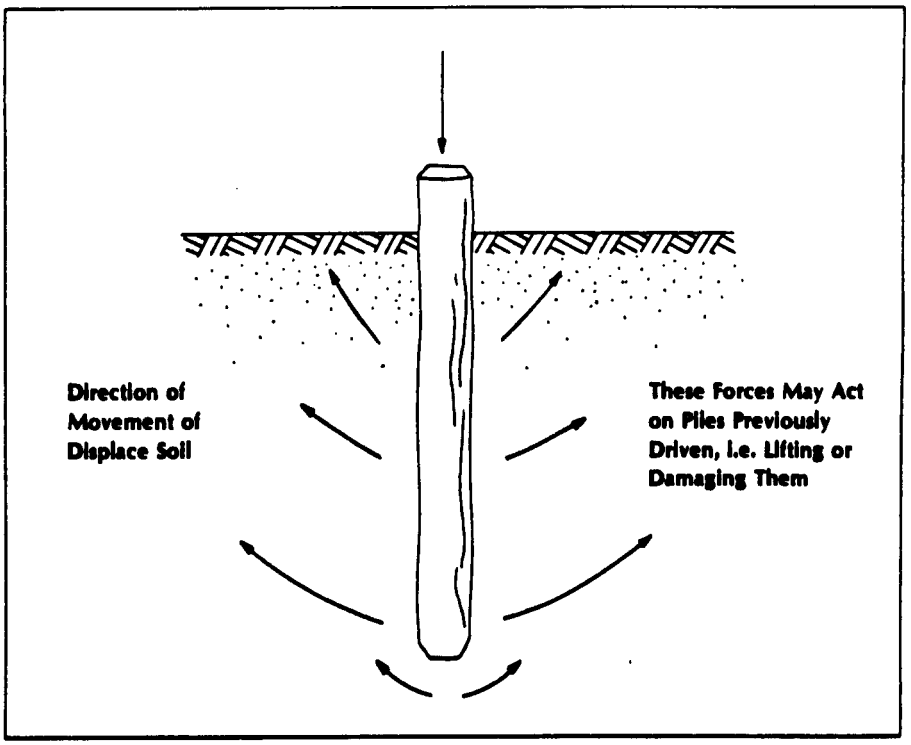

Figure 6-5 Pile action on the soil

Settlement of a group of friction piles will tend to increase as the number of piles in the group increases. Efficiency factors can be used to calculate how to reduce the allowable load to compensate for settlement. For piles spaced wider than three pile diameters, the reduced group capacity can be found by multiplying the sum of the individual capacities times the ultimate bearing capacity times an efficiency factor which varies from 0.7 for a spacing of three pile diameters to 1 for eight pile diameters. Alternatively, the pile groups are proportioned on the basis of computed settlements.

c. Uplift resistance. The resistance to uplift of pile groups in clay is governed by the same considerations that apply to uplift resistance of pile groups in sand.

d. Driving. Clay soils are relatively incompressible under the action of pile driving. Hence, a volume of soil eaual to that of the pile usually will be displaced (figure 6-5). This will cause ground heave between and around the piles.

- Driving a pile alongside those previously driven frequently will cause those already in place to heave upward.

- In the case of piles driven through a clay stratum to firm bearing beneath, the heave may be sufficient to destroy the contact between the tip of the pile and the firm stratum. This may be detected by taking level readings on the tops of piles pre viously placed. Raised piles should be redriven to firm bearing.

- The displacement of soil by the pile may cause sufficient lateral force to move previously driven piles out of line or damage the shells of cast-in-place concrete

piles of the shell-less type. This problem may be solved by predrilling.

6-7. Negative friction (down drag).

a. Cohesive soils. After a pile is installed through a stratum of cohesive soil, the downward movement of the consolidating and overlying soils will cause a drag on the pile. The consolidation may be caused by the weight of the deposit, by the imposition of a surcharge such as a fill, or by remolding during pile installation. The downward drag may cause excessive settlement. Coating the pile with a bitumen compound will reduce drag. The magnitude of the drag per unit of area cannot exceed the undrained shearing strength of the compressible soil (table 5-l). The drag acts on the vertical surface area of the entire pile foundation. Methods of analysis for drag on piles in clay are illustrated in figure 6-6.

b. Sensitive clays. When piles are driven through sensitive clay, the resulting remolding may restart the consolidation process. The downward force due to negative friction may then be estimated by multiplying the cohesion of the remolded clay by the surface area of the pile shaft. Particular care should be given to the design of friction pile foundations if the soil is sensitive. In such circumstances it maybe preferable not to use piles.

c. Design allowance. If drag will develop, the point resistance of the piles should be evaluated separately by means of analysis or load tests. The drag load should be added to the load earned by the bearing stratum. When drag causes an overload, the allowable load may be reduced by 15 percent if a safety factor from 2.5 to 3 is provided for the working load.

6-8. Permafrost.

a. Suitability. Piles are extremely satisfactory as foundations in arctic regions. Their use is discussed in detail in TM 5-349. Since the bearing value of frozen ground is high, piles in permafrost will support a tremendous load. However, because freezing of the active zone creates uplift, piles maybe installed at least twice as deep as the thickness of the active zone. To reduce uplift, piles are installed butt down. Loads are not placed on piling until the permafrost has had a chance to refreeze, unless the normal skin fiction and bearing will support the load.

b. Allowable load. The allowable load can be determined as follows.

- Immediately after construction (figure 6-7, 1).

$$Q_{all} = P \times A$$

where:

Q_{all} = allowable load

P = the compressive strength of permafrost

A = the tip area of the pile

- During the summer season (figure 6-7, 2).

$$Q_{all} = a + P \times A$$

where:

a = the adfreezing strength of the permafrost to the pile

- During the winter season (figure 6-7, 3).

To prevent uplift, a must be greater than b

where:

b = the adfreezing strength of the frost zone to the pile

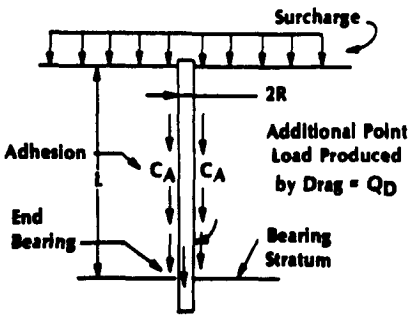

Single Pile

Sensitive Clay

Maximum Drag Force:

$Q_D = 2\pi RC_A L$ $\quad$ $Q_D = 2\pi RC_A L$

Insensitive Clay

Maximum Drag Force

$Q_D = 0$ $\quad$ $Q_D = 2\pi RC_A L$

Adhesion C_A (See Table 5-1)

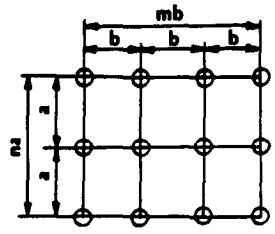

Pile Cluster

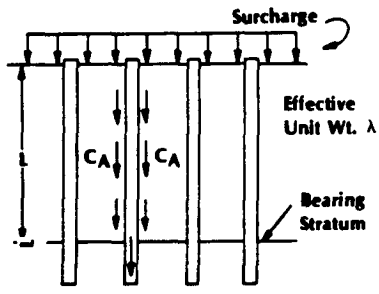

Bearing Piles

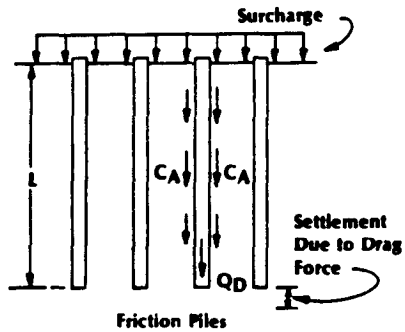

Friction Piles

Sensitive Clay

End Bearing Piles
Maximum Drag Force:

$Q_D = ab_A\lambda L$

But Drag Cannot Exceed the Smaller of the Following Two Forces:

$Q_D = 2\pi RC_L L$

or

$$Q_D = \frac{2(na + mb)C_A L}{(n + 1)(m + 1)}$$

← Number of Piles

Adhesion C_A (See Table 5-1)

Friction Pile

When Pile Relies on Side Friction for Support and the Direction of Side Friction Is Changed To Drag by Consolidation, then Drag Force that Can Develop Is Limited by Point Bearing Resistance of Pile But Could Equal the Maximum Drag for End Bearing Piles if This Value Is Less than Point Resistance.

Insensitive Clay

End Bearing and Friction Piles

Condition	Without Surcharge	With Surcharge
	Because Only a Limited Volume of Remolded Soil Is Consolidating, Drag Is Small Compared to Point Bearing Capacity of Pile.	Drag Force Approaches the Upper Limit of the Values for Piles in Sensitive Clay.

Figure 6-6 Analysis of drag on piles in clay

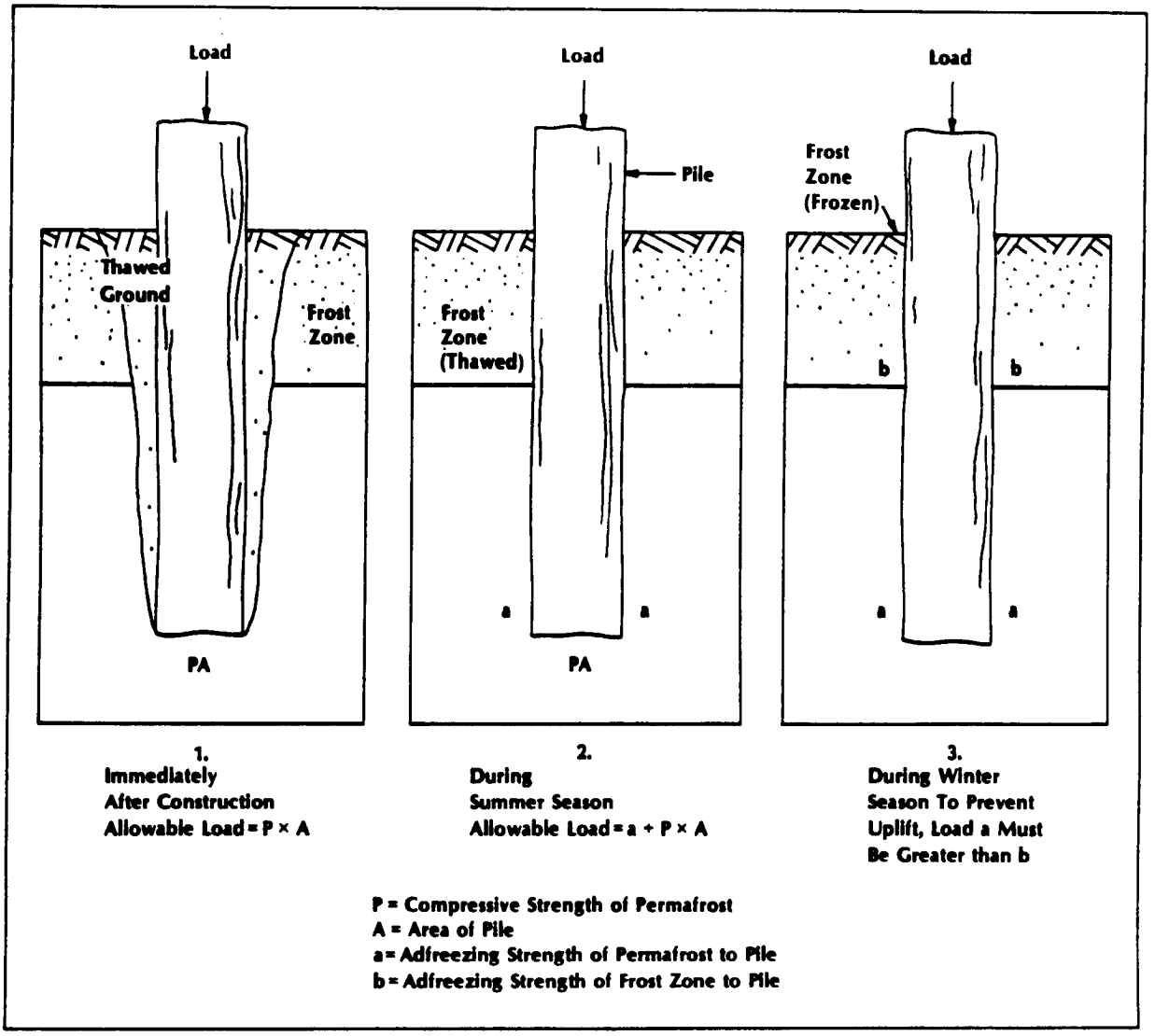

Figure 6-7 Forces acting on and supporting capacity of piling in permafrost

c. Spacing. A minimum spacing of 6 feet is used if the piles are placed in holes thawed by a steam or water jet. Normal design should space piles 10 to 14 feet apart. For very heavy construction, excellent results have been obtained by using 8-inch diameter, standard-weight steel pipes, placed in holes drilled without steam or water jetting, and spaced 6 feet center-to-center.

d. Installation seasons. The best season to install piles in the arctic is autumn, as soon as the ground surface has frozen sufficiently to support equipment. If working conditions permit, winter is an equally good season.

Section III. DESIGN EXAMPLES

6-9. Point-bearing piles in sand.

a. Task. Design a pile structure for soft soils over a thick stratum of sand. Determine the number of 15-inch timber piles required to support an isolated column footing which carries a vertical load of 180 tons, including the weight of the pile cap.

b. Conditions. The soil consists of 10 feet of soft organic clay underlain by sands. The groundwater table is at ground surface. The submerged unit weights of the clay and sands are 40 and 62 pounds per cubic foot respectively. A split spoon boring indicates that the penetration resistance of the sand is 30 blows per foot. A test pile has been driven through the organic clay, penetrating 5 feet into the sand. Time is not available to perform a pile load test.

c. Dynamic formula. A 3,000-pound hammer with a drop of 6 feet is used to drive the test pile. The average penetration of the pile during the last 6 blows of the hammer is 0.25 inch. Using the Engineering News formula applicable for drop hammers, the estimated allowable load for the pile is as follows.

$$Q_{all} = \frac{2 \times 3{,}000 \times 6}{0.25 + 1.0}$$

= 28,800 pounds
= 14.4 tons

d. Static formula. The allowable load on a single pile also maybe estimated by means of the static formula (figure 5-4, 2). Based on the penetration resistance of 30 blows per foot, the sand stratum can be assumed to be in a medium dense condition with an angle of internal friction of 36 degrees.

$$Q_u = qA_p + fA_s = P_o N_q A_p + K_c P_o \tan\delta A_s$$

(ultimate bearing capacity)

where:

$P_o = \gamma D$ (effective overburden pressure at tip of pile)

P_o = 10 feet x 40 pcf (clay) + 5 feet x 62 pcf (sand) = 710 psf

N_q = 50 (bearing capacity factor from chart)

K_c = 1.5 (earth pressure coefficient)

$P_o = \gamma D$ (effective overburden pressure at midpoint)

P_o = 10 feet x 40 pcf + 2.5 feet x 62 pcf
= 555 psf (at midpoint of embedment in sands)

δ = 29° (angle of shaft resistance from chart)

$\tan\delta = \tan(29°) = .554$

$A_p = \pi r^2$ = 1.23 square feet (cross-sectional area of pile)

$A_s = \pi rh$ = (shaft area)

A_s = 2(3.14) (.625)(5)
= 19.6 square feet

Q_u = 710 x 50 x 1.23 + 1.5 x 555 x 0.554 x 19.6
= 43,665 + 9,040
= 52,705 pounds
= 26.4 tons

$Q_{all} = Q_u/FS$
$= \frac{26.4}{1.5}$
= 17.6 tons

where:

FS=factor of safety

e. Allowable load and spacing. Both the dynamic and static formulas indicate that an allowable load of 15 tons per pile is reasonable. The number of piles required to support the load is 180/15 = 12 piles. As the piles are founded in sand, no reduction for group action is necessary. The piles should be spaced 3 feet (three times the pile diameter) center-to-center and could be arranged in 3 rows of 4 piles each. Piles should be 17 feet long, providing an additional 2 feet required for embedment and for differences in driving resistances. If a concrete cap is used, allowance must be made for embedment of piles into the cap.

6-10. Point-bearing piles in sands with deep clay stratum.

a. Task. Design a pile structure for soft soils over a thick stratum of sand. Determine the number of 15-inch timber piles required to support a load of 180 tons including the weight of the pile cap.

b. Conditions. Foundation conditions are similar to those in paragraph 6-9 except that the sand stratum is of limited thickness and underlain by clay. The soil profile and available soils data are shown in figure 6-8.

c. Allowable load. The allowable load per pile, based on either the dynamic or static formula, is determined to be 15 tons, as noted in paragraph 6-9.

d. Settlement. The clay layer underlying the sand stratum could result in undesirable settlement of the pile foundation. Settlement caused by consolidation is a matter of concern if the structure is not temporary. Consolidation settlement can be estimated using the stress distribution based on figure 6-4 and the approximate method of settlement analysis explained in TM 5-545.

(1) *Basic equation.* The basic equation for settlement due to consolidation of a normally loaded clay of low sensitivity is as follows.

$$\Delta H = [HC_c / (1 + e_o)] [\log_{10} (p_1 / p_o)]$$

where:

ΔH = ultimate decrease in thickness of a confined clay layer due to consoldiation in feet (also, settlement of the structure)

H = thickness of clay layer in feet

C_c = compression index
$C_c = 0.009 (W_L - 10)$
W_L = the liquid limit

e_o = initial void ratio

p_o = initial pressure in tons per square foot

p_1 = final pressure in tons per square foot

(2) *Pressure calculations.* .All pressure calculations will be referred to the center of the clay layer (elevation 268).

$$\begin{aligned} P_o &= 10(40) + 12(62) + 10(48) \\ &= 400 + 744 + 480 \\ &= 1.624 \text{ psf} \\ &= 0.81 \text{ tons per square foot} \end{aligned}$$

where:

P_o = existing overburden pressure

For simplicity, it is assumed that the piles are arranged in a square pattern of 4 x 4. The increase in pressure, Δp, is obtained by assuming that the load is spread at angle of 2 vertical to 1 horizontal, starting at the lower third point of the pile embedment in sands.

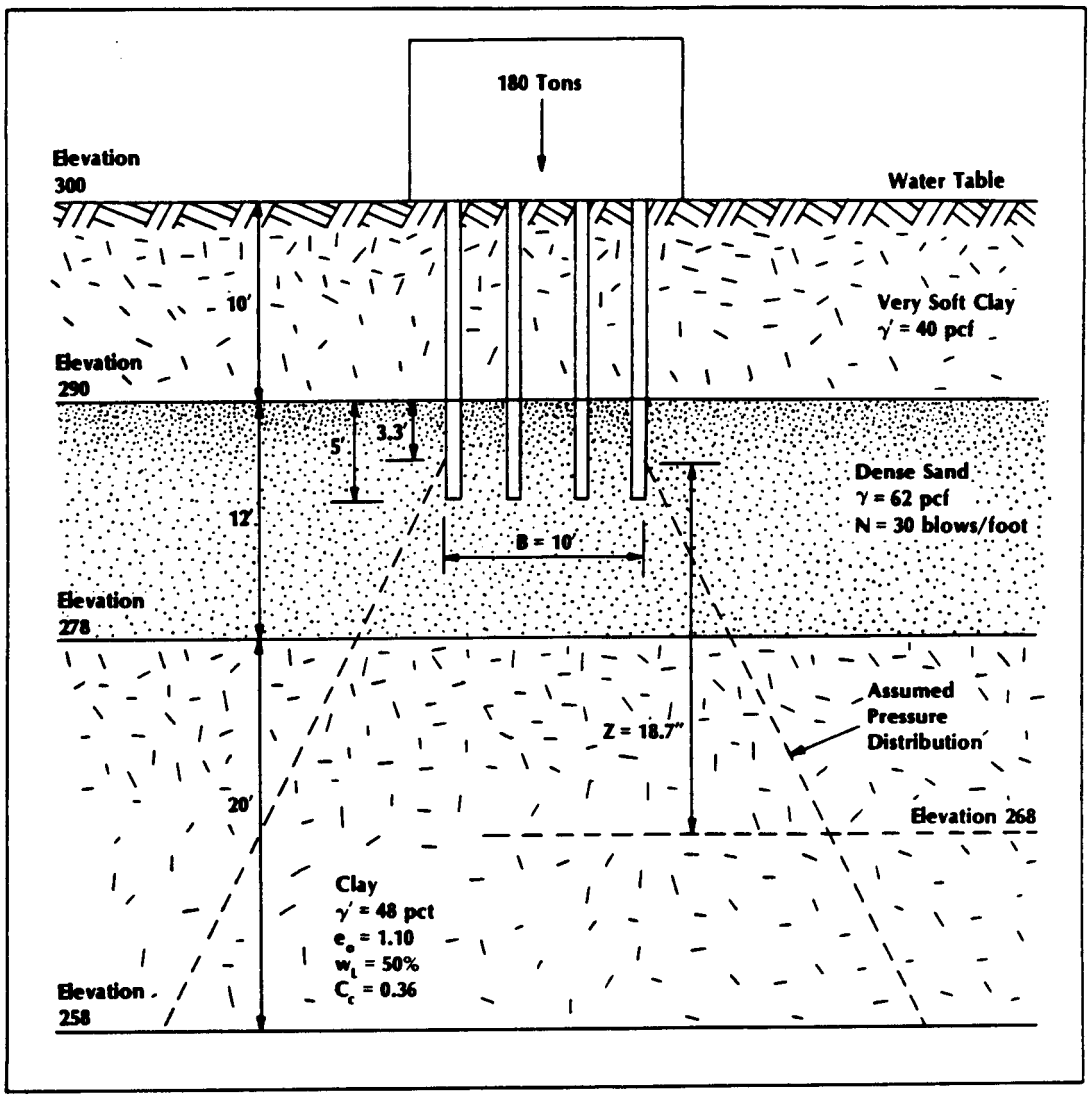

Figure 6-8 Design of pile foundation in dense sand underlain by clay

(3) *Settlemet formula.* Estimated settlement as follows.

$$\Delta p = \frac{Q}{(B + z)^2} = \frac{180}{(10 + 18.7)^2}$$

$$\Delta p = \frac{180}{824} = 0.22 \text{ tons per square foot}$$

$$\Delta p_1 = p + p_o = 0.22 + 0.81$$
$$= 1.03 \text{ tons per square foot}$$

(4) *Settlement estimate.* The settlement may now be estimated as follows.

$$\Delta H = \frac{20\,(0.36)}{(1 + 1.10)} \left[\log_{10} \frac{1.03}{0.81}\right]$$

$$\Delta H = \frac{7.2}{2.1} \left[\log_{10} 1.27\right]$$

$$\Delta H = 3.43\,(0.104) = 0.36 = 4.3 \text{ inches}$$

(5) *Other considerations.* This foundation may be expected to settle approximately 4 inches. Settlement may be reduced slightly by increasing the spacing between the piles. An increase in pile spacing above four times the pile diameter frequently results in uneconomical design of the pile cap. If this amount of settlement is excessive, longer timber piles may be driven through the sand and clay to bedrock. Jetting may be necessary to get the piles through the sand layer. If this is done, the load on each pile maybe increased to 20 tons or more, and the number of piles may be reduced from 16 to 9. Piles 42 feet long will be required.

6-11. Friction piles in clay.

a. Task. Design a pile foundation in a location where borings indicate a uniform clay deposit to a depth of 80 feet (figure 6-9). Determine the number of 12-inch timber piles (readily available in 45 foot lengths) required to support a load of 120 tons.

b. Conditions. The clay is medium stiff, with an average unconfined shear strength of 600 pounds per square foot (0.3 tons per square foot). The allowable load on a single pile may be estimated by using the soil test results and other information (figure 5-3). Time is not available to perform a pile load test.

c. Required embedment. The ultimate load on a single pile using the analysis shown in figure 5-3 is as follows.

$$Q_u = qA_p + ca_z\, dP$$

where:

$q = 9c = 9 \times 0.3$
$= 2.7$ tons per square foot

$A_p = \pi r^2 = 3.14 \times (0.5)^2$
$= 0.785$ square foot

$c = 0.3$ tons per square foot

$a_z = 0.92$ (figure 5-3)

$d =$ unknown

$P = 2\pi r = (2)(3.14)(.5) = 3.14$ feet

Based on a safety factor of 2.0, the required embedment to provide an allowable load per pile of 20 tons is as follows.

$$Q_u = 2 \times 20\ qA_p + ca_z\, dP$$

$$40 = 2.7 \times 0.785 + 0.3 \times 0.92 \times 3.14d$$

$$d = 44 \text{ feet}$$

d. Pile spacing and group action. If the piles are arranged in 3 rows of 3 piles each with a spacing of 3 feet 6 inches, center-to-center, the pile group can carry a gross load of 9 (20) = 180 tons. To accommodate the larger settlement expected from a group of piles compared to a single pile, the capacity should be multiplied by an efficiency factor, E, which (as previously noted) is equal to 0.7 for a pile spacing of 3 pile diameters. Thus, the group capacity corrected for settlement to 0.7 x 180 tons (126 tons) is a value greater than the actual load of 120 tons.

e. Block failure. To check for block failure (figure 6-3) the bearing capacity of the pile group is computed as follows.

$$Q_u = qA_p + cdP$$

where:

Q_u = ultimate bearing capacity of group

$q = 9c = 9 \times 0.3$
$= 2.7$ tons per square foot

A_p = plan area of block
= 8 x 8 = 64 square feet

c = 0.3 tons per square foot

d = pile embedment = 44 feet

P = perimeter of group
= 4 x 8 = 32 feet

Q_a = 2.7 x 64 + 0.3 x 44 x 32
= 173 + 422 = 595 tons

With a safety factor of 3, the allowable load on the pile group is 595/3 = 198 tons. Since this is greater than the load which the group will carry (120 tons), the design is satisfactory from the standpoint of block failure.

f. Settlement. The settlement of the pile group may be estimated using the approximate method described in paragraph 6-10, assuming that the pile loads are applied on a plane located one-third of the length of the piles above their tips. Using the data shown in figure 6-9, the following calculations are made with pressures calculated at elevation 125.

P_o = 55(52) = 2,860 pounds per square foot
= 1.43 tons per square foot

$$\Delta p = \frac{Q}{(b + z)^2} = \frac{120}{(8 + 25)^2}$$

= 0.11 tons per square foot

P_1 1.43 + 0.11 = 1.54 tons per square foot

$$\Delta H = \frac{50\ (0.32)}{1 + 1.05} \log_{10} \frac{1.54}{1.43}$$

ΔH = 0.25 foot = 3 inches

Assuming that a long-term settlement of 3 inches is acceptable, the design is considered satisfactory. If the computed settlement is excessive, the amount could be reduced by using greater pile spacings or longer piles. It should be noted that long-term settlements exceeding 1 inch can cause serious problems for rigid structures. This is particularly true when differential settlements occur.

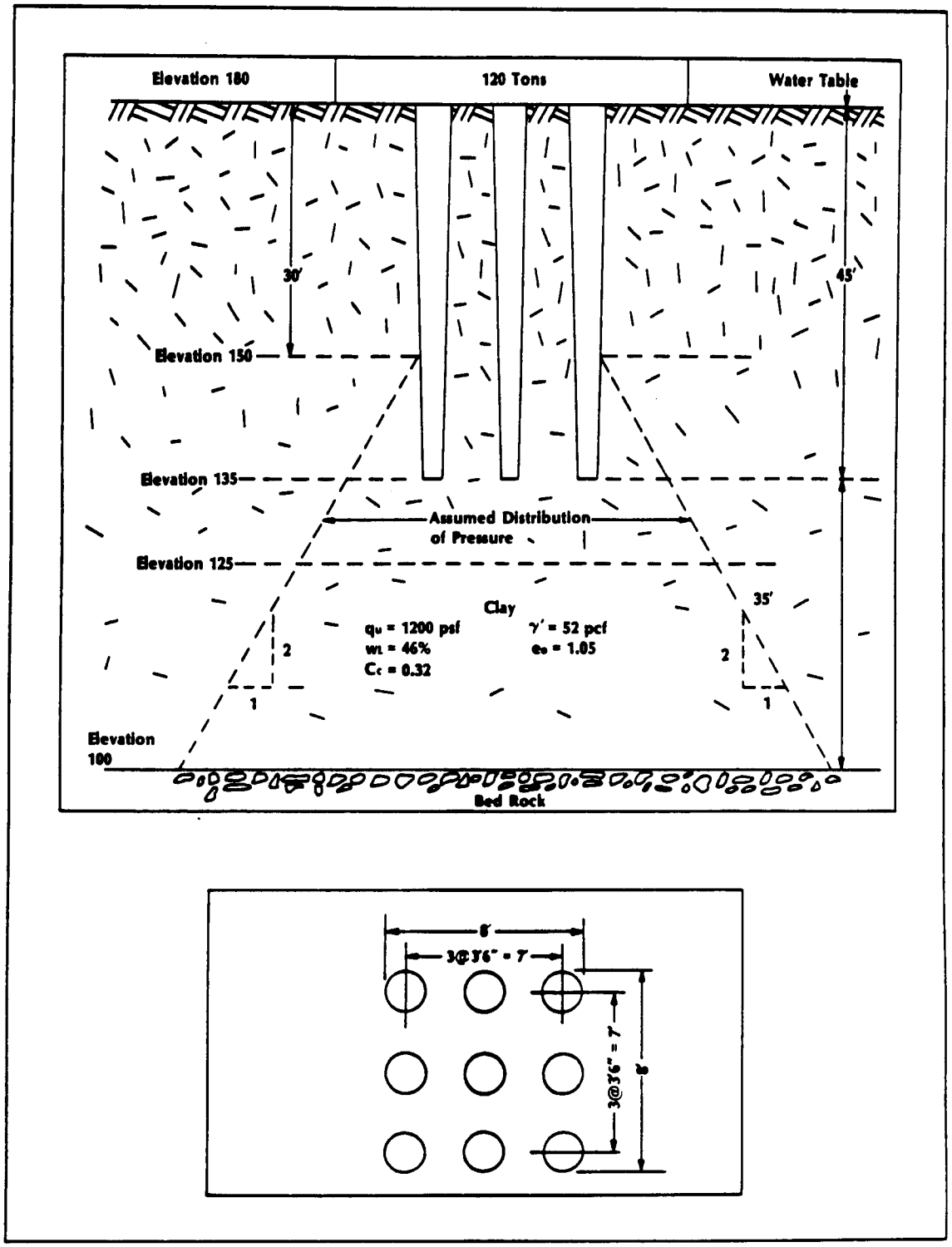

Figure 6-9 Design of friction pile foundation in a deep deposit of clay

CHAPTER 7
DISTRIBUTION OF LOADSON PILE GROUPS

Section I. DESIGN LOADS

7-1. Basic design.

The load carried by an individual pile or group of piles in a foundation depends upon the structure concerned and the loads carried. Under normal circumstances, pile foundations are designed to support the entire dead load of the structure plus an appropriate portion of the live load.

7-2. Horizontal loads.

Determining horizontal loads acting on piles used for bridge supports is of particular importance in military construction. Piles which support bridges crossing rivers are often subjected to a variety of horizontal loads.

- Pressure of flowing water.
- Forces of ice.
- Impact of floating objects.
- Effects of wind on the substructure and superstructure.

Methods of computing these loads are described in TM 5-312.

Section II. VERTICAL PILE GROUPS

7-3 Distribution of vertical loads.

a. Resultant at center of gravity. Piles under a structure act as a group in transmitting the loads to the soil. The distribution of loads to the individual piles depends upon the amount of vertical and horizontal movement at the base of the structure and the amount of rotational movement about some center. If the base of structure is rigid and the piles are all vertical, a vertical load (or several vertical loads) applied at the center of gravity of the pile group will be distributed equally to all the piles. Thus, assuming that the resultant (R) of all vertical loads passes through the center of gravity of the pile group (figure 7-l), the load (P_v) on each pile is given by the following formula.

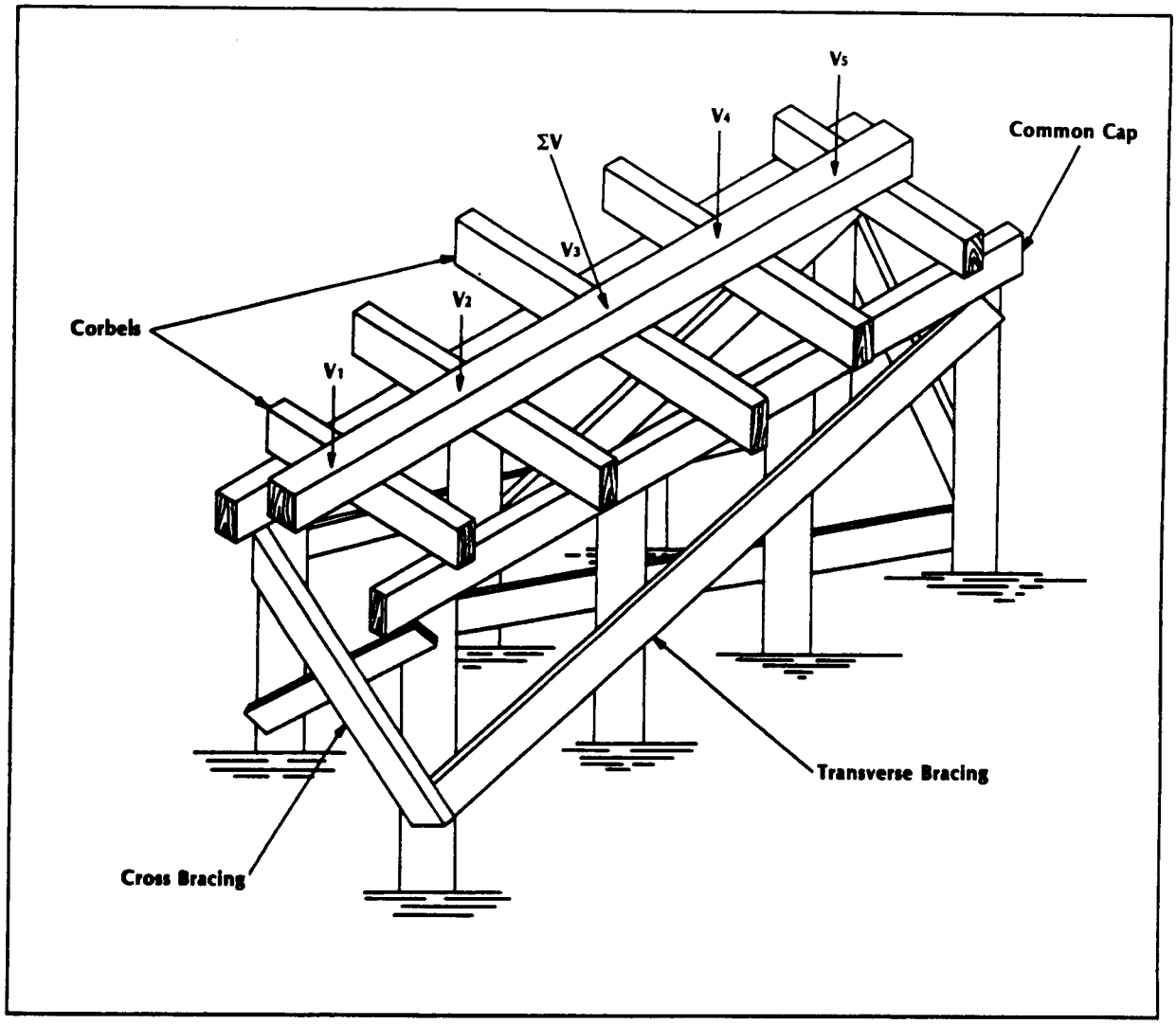

Figure 7-1 Pile group with resultant passing through center of gravity

$$P_v = \frac{R}{n} = \frac{\Sigma V}{n}$$

where

R = resultant of all vertical loads

P_v = load acting on each pile

ΣV = summation of all vertical loads acting on pile group

n = number of piles in pile group

b. Resultant not at center of gravity. If the resultant of all the vertical loads acting on a pile group does not pass through the center of gravity of the pile group, the distribution of the loads to the individual piles is indeterminate. Discussion of the approximate method for determining the distribution of loads follows. This method should be suitable for military applications.

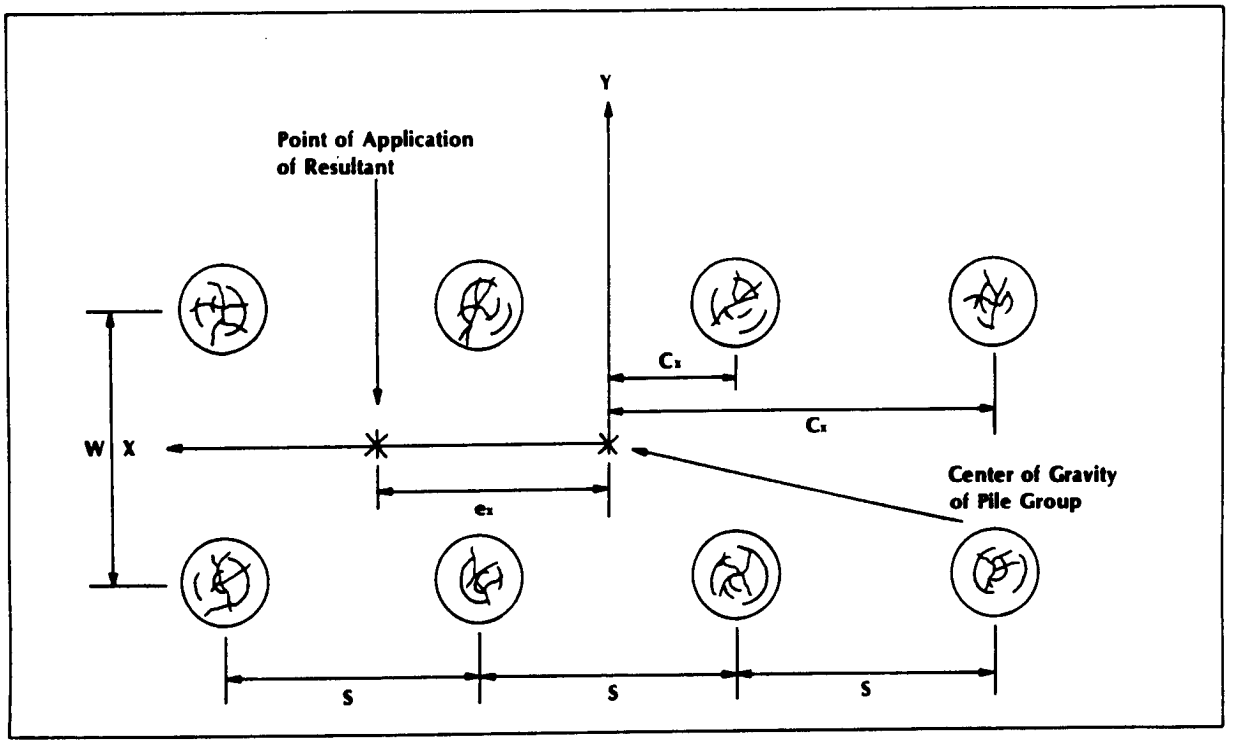

Figure 7-2 Pile group with resultant not at center of gravity

7-4. Calculating distribution of loads.

Before approximate methods are used for vertical pile foundations, it is important to know the limitations involved. The approximate methods disregard the characteristics of the soil and piles and the restraint of the embedded pile head. For vertical pile foundations where the soil and piles offer great resistance to movement, approximate methods give results equivalent to those obtained by more refined methods.

a. Resultant eccentric about one axis.

(See figures 7-1, 7-2.) If the resultant ($R = \Sigma V$) is eccentric only about one axis, the Y-Yaxis, the load on any pile (P_v) is given by the following formula.

$$P_v = \frac{\Sigma V}{n} + \frac{\Sigma V (e_x)(c_x)}{I_y}$$

where:

P_v = vertical load on any pile

ΣV = resultant of all vertical loads on pile group

n = number of piles

e_x = distance from point of intersection of resultant with plane of base of structure to Y- Yaxis

c_x = distance from Y - Y axis to pile for which P_v is being calculated

I_y = moment of inertia of pile group about Y - Y axis with each pile considered to have an area of unity

b. Resultant eccentric about two axes. If the resultant is eccentric about both the X and Y axes, the load on any pile (P_v) is given by the following formula.

$$P_v = \frac{\Sigma V}{n} + \frac{(\Sigma V)(e_x)(c_x)}{I_y} + \frac{(\Sigma V)(e_y)(c_y)}{I_x}$$

where

e_y = distance from point of intersection of resultant with plane of base of structure to X-xaxis

c_y = distance from X - X axis to pile for which P, is being calculated

I_x = moment of inertia of pile group about X - X axis

c. Moment of inertia of pile group. The moment of inertia of a pile group about either the X-X or Y-Y axis (figure 7-2) can be calculated by the following formula.

$$I = (A_p)\frac{S^2}{12}(n^2 - 1)\text{ (number of rows)}$$

where

A_p = the area of one pile, assumed to be equal to 1

S = pile spacing in feet

n = number of piles in each row

Since A_p equals 1, if there are four piles per row and two rows (figure 7-2), the moment of inertia about the Y-Y axis is given by the following formula.

$$I_y = \frac{S^2}{12}(4)(4^2-1)(2\text{ rows})$$

$$I_y = 10\ S^2$$

If there are two piles per row and four rows, the moment of inertia (I_x) is given by the following formula.

$$I_x = \frac{S^2}{12}(2)(2^2-1)(4\text{ rows})$$

$$I_x = S^2$$

d. Example.

(1) *Task.* Calculate the load acting on each pile if the resultant **(Σ V)** acts at the center of gravity of the pile group, X = 0 feet. Calculate the load acting on each pile if the resultant **(Σ V)** acts at a distance X=-4 feet.

(2) *Conditions.* Assume that the bent (figure 7-3) is subjected to a load **(Σ V)** of 135 tons including both dead and live loads. Assume that the resultant of the vertical loads **(Σ V)** acts at a position -X feet to the right of the center of gravity of the bent. Distances to the left are plus and distances to the right are minus.

(3) *Solution.* If the resultant acts at the center of gravity of the pile group, the load acting on each pile is the same and is given as follows.

$$P_v = \frac{\Sigma V}{n} = \frac{135\text{ tons}}{9\text{ piles}} = 15\text{ tons per pile}$$

If the resultant acts 4 feet to the right of the center of the gravity of the bent, the load acting on each pile can be computed from the following formula.

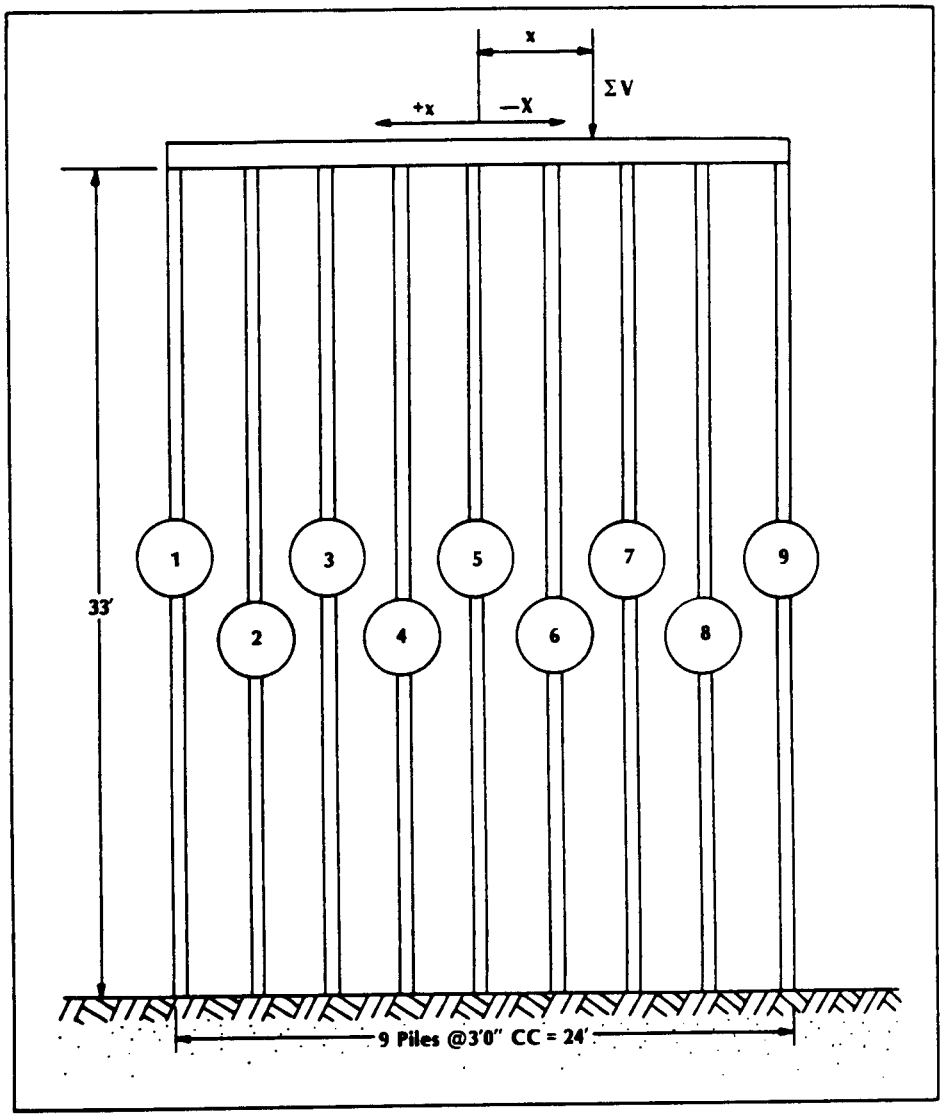

Figure 7-3 Pile bent

$$P_v = \frac{\Sigma V}{n} + \frac{(\Sigma V)(e_x)(c_x)}{I_y}$$

where:

ΣV = 135 tons

n = 9 piles

e_x = -4 feet (center of gravity of the pile group to the point of application of the resultant)

The moment of inertia J can be computed as follows.

$$I_y = \frac{S^2}{12}(n)(n^2 - 1)\text{ (number of rows)}$$

TABLE 7-1. TABULAR FORM FOR DETERMINING LOAD ACTING ON EACH PILE

Pile No.	ΣV n (tons)	C_x (feet)	-1 ton/ foot (C_x) (tons)	P_v (tons)
1	15	+12	-12	3
2	15	+9	-9	6
3	15	+6	-6	9
4	15	+3	-3	12
5	15	0	0	15
6	15	-3	+3	18
7	15	-6	+6	21
8	15	-9	+9	24
9	15	-12	+12	27

where

$$S = 3 \text{ feet}$$

$$n = 9 \text{ piles}$$

$$I_y = \frac{(3 \text{ feet})^2}{12} (9)(9^2 - 1)(1 \text{ row})$$

$$I_y = 540 \text{ feet}^2$$

Substituting these values of ΣV, n, ex, and I_y into the above equation gives the following.

$$P_v = \frac{135 \text{ tons}}{9 \text{ piles}} + \frac{135 \text{ tons } (-4 \text{ feet})\, c_x}{540 \text{ feet}^2}$$

$$P_v = 15 \text{ tons} - \frac{1 \text{ ton}}{\text{feet}} c_x$$

where:

c_x = the distance in feet from the center of gravity of the pile group to the pile for which P, is being calculated. (The value of C_x can be either plus or minus according to the established sign convention.)

(4) *Tabulations.* The remaining computation can be tabulated as shown in table 7-1. The loads on these piles vary from 3 tons for pile one to 27 tons for pile nine. To check this pile foundation, the allowable load of each pile should be calculated by the procedures established in chapter 5.

Section III. VERTICAL AND BATTER PILE GROUPS

7-5. Load distribution from structure to piles.

Batter piles are used in a pile group to absorb all or part of the horizontal loads when the group is unstable with only vertical piles. Pile groups that consist of a combination of vertical and batter piles are indeterminate except where the piles are symmetrical about the transverse and longitudinal axis of the foundation. In this case, a vertical load applied at the center of the pile group will be distributed equally to all piles.

7-6. Determining distribution of loads to groups containing batter piles.

a. Limitations. A method similar to that for vertical pile groups is also used for determining the load distribution on vertical and batter piles. This method has limited accuracy and should be used only in hasty construction in a theater of operations. Computed values are used in permanent structures or structures which must carry heavy loads.

b. Application. In applying the approximate method, the load imposed on each vertical and batter pile is assumed to act in the direction of the pile (figure 7-4).

Calculate the vertical component of load, P_v, on each pile as follows.

$$P_v = \frac{\Sigma V}{n} = \frac{\Sigma M c_x}{I_y}$$

where:

ΣV = resultant of vertical loads on a pile group

n = number piles

ΣM = summation of all moments about the center of gravity of pile group at the level of pile fixity due to XV and ΣH (figure 7-4)

c_x = distance from center of gravity of pile group to pile for which P_v is being calculated

I_y = moment of inertia of pile group

The relationship between the vertical and horizontal load components and resultant axial pile load is shown in figure 7-5. Calculate the horizontal and axial components as follows.

$$P_h = P_v \frac{x}{y}$$

$$P_a = P_v \sqrt{1 + \frac{x^2}{y^2}}$$

$$P_a = P_v \sec \theta$$

where

P_h = horizontal component of pile load

P_a = axial component of pile load

x = coefficient of horizontal batter

y = coefficient of vertical batter

$\sec \theta$ = angle (in degrees) of the batter

The horizontal component of axial loads on the batter pile is assumed to add to or resist the horizontal thrust depending upon the direction of batter. The horizontal load on any pile is the algebraic difference between the resultant horizontal load and the summation of the horizontal components of axial loads on the batter piles divided by the number of piles.

$$P_h = \frac{\Sigma H - \Sigma P_v \frac{x}{y}}{n}$$

or

$$P_h = \frac{\Sigma H - \Sigma P_a \sin \theta}{n}$$

The vertical, horizontal, and axial components (figure 7-4) may be represented by a force polygon (figure 7-6). The batter piles have reduced the' magnitude of the total horizontal load from ΣH to $\Sigma H'$ as follows.

$$\Sigma H' = \Sigma H - \Sigma P_v \frac{x}{y}$$

These operations can be interpreted graphically or computed mathematically. After constructing the force diagram or computing the lateral loads and bending stresses on each pile, the loads are checked to determine if they are less than the allowable lateral resistance and bending stresses.

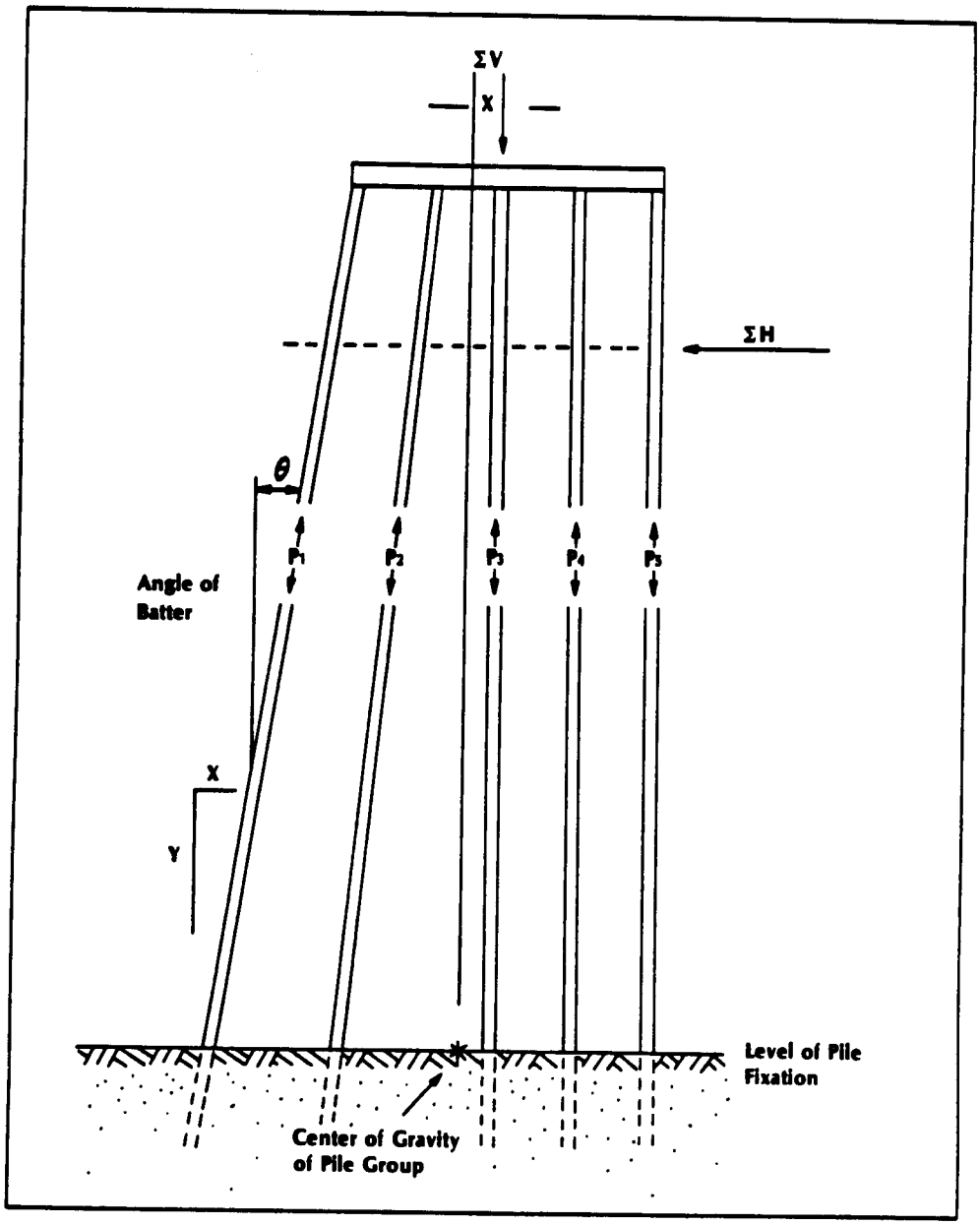

Figure 7-4 Pile reaction in a pile group composed of batter and vertical piles

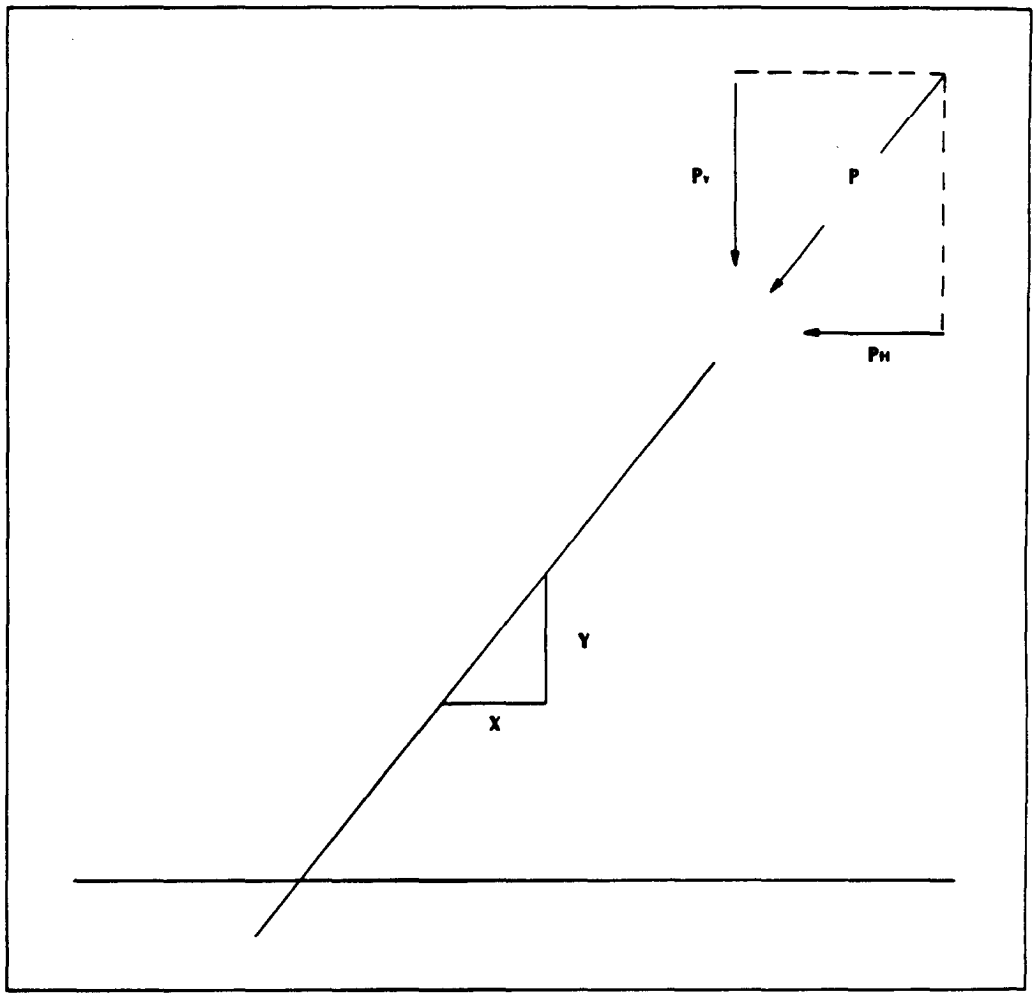

Figure 7-5 Relationship of pile load components

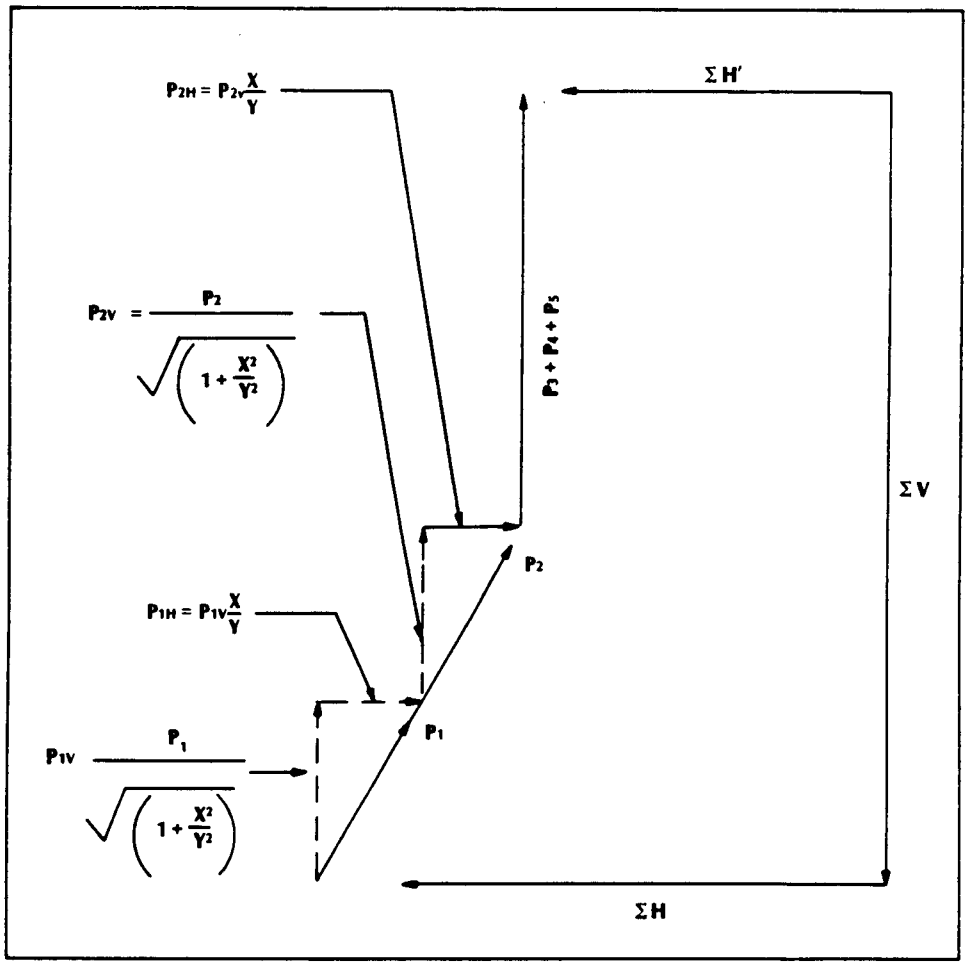

Figure 7-6 Force polygon

CHAPTER 8
MAINTENANCE AND REHABILITATION

Section I. TIMBER PILES

8-1. Damage and deterioration.

Both untreated and treated piles are subject to deterioration and damage by decay, termites, marine borers, mechanical forces, and fire. Steps should be taken to insure that piles will remain durable in semipermanent or temporary structures. Untreated timber piles entirely embedded in earth and cut off below the lowest groundwater level, submerged in freshwater, or frozen into saturated permafrost soils are considered permanent. The lowest groundwater table should not be higher than the invert level of any sewer or subsurface drain existing or planned, nor higher than the water level at the site resulting from the lowest drawdown of wells or sumps. Percolating groundwater heavily charged with acids or alkalies can destroy piles. The following subparagraphs describe the most destructive forces on piles.

a. Decay. Decay is caused by fungi which penetrate the wood in all directions. Fungi feed on the wood, which breaks down and rots (figure 8-l). The probability and rate of decay depend on several factors.

(1) *Species.* Timber piles which are naturally durable have a useful life for many decades.

(2) *Preservatives.* Untreated timber piles that are alternately wet and dry may last from five to ten years, whereas treated piles will last from 10 to 20 years.

(3) *Temperature.* Timbers which last several years *in* temperate climates may last less than a year in tropical conditions.

(4) *Dampness (permanent or intermittent).* All timber piles will remain free from decay if the water content is kept below 22 percent. The decay is rapid if the pile is alternately wet and dry. Such a situation may exist in a waterfront structure where the tide causes large changes in the water level. On semipermanent structures on land, damage is caused by lowering the water table during the life of the structure.

(5) *Oxygen.* Wood-rotting fungi cannot develop without a supply of free oxygen.

b. Termites. Timber piles in warm climates are subject to attack by subterranean

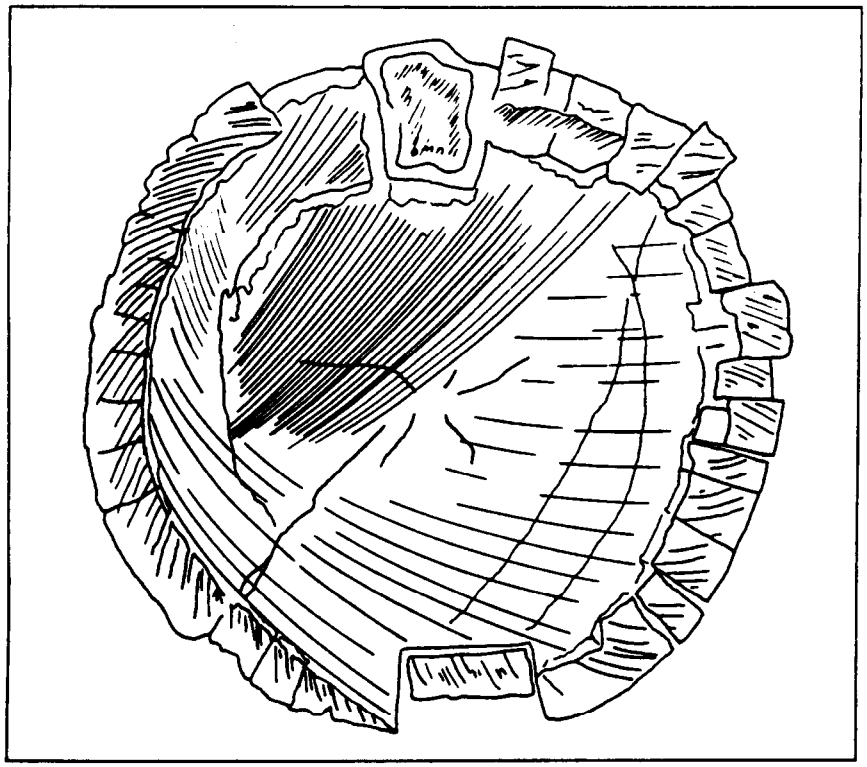

Figure 8-1 Decay of untreated timber pile

termites. Termites are active through the tropics and subtropics in both wet and and regions. Some species occur in the warmer parts of temperate countries—for example, in southern France—but they are not found in the colder parts of these regions. Termite activity is very destructive. In the tropics, timber piles in contact with the ground may be destroyed in a few weeks unless they are from a species resistant to termites.

c. Marine borers. Marine borers rapidly destroy untreated wooden structures in salt water (figure 8-2). In the tropics they can do severe damage in a few months unless the timber is one of the few resistant species such as greenheart or turpentine wood (see appendix). In temperate climates, attack is generally slower and sporadic. Except for certain resistant species, timber piles are likely to be destroyed in a few years.

d. Mechanical forces. Timber piles in waterfront structures or bridges are damaged by abrasive action between the mud line and the water or, in some cases, even above the high waterline. Wear can be caused by floating craft, drifting objects, ice, and wave or current action which scour the pile surface with pebbles or coarse sand.

e. Fire. Timber piles, especially if creosoted, are extremely susceptible to destruction by fire.

8-2. Preventive measures.

a. Basics. Protection against wood-destroying organisms can be obtained by selecting naturally resistant timber species (see appendix) or by applying preservative treatments. Natural resistance applies only to the heartwood. Sapwood, even of very

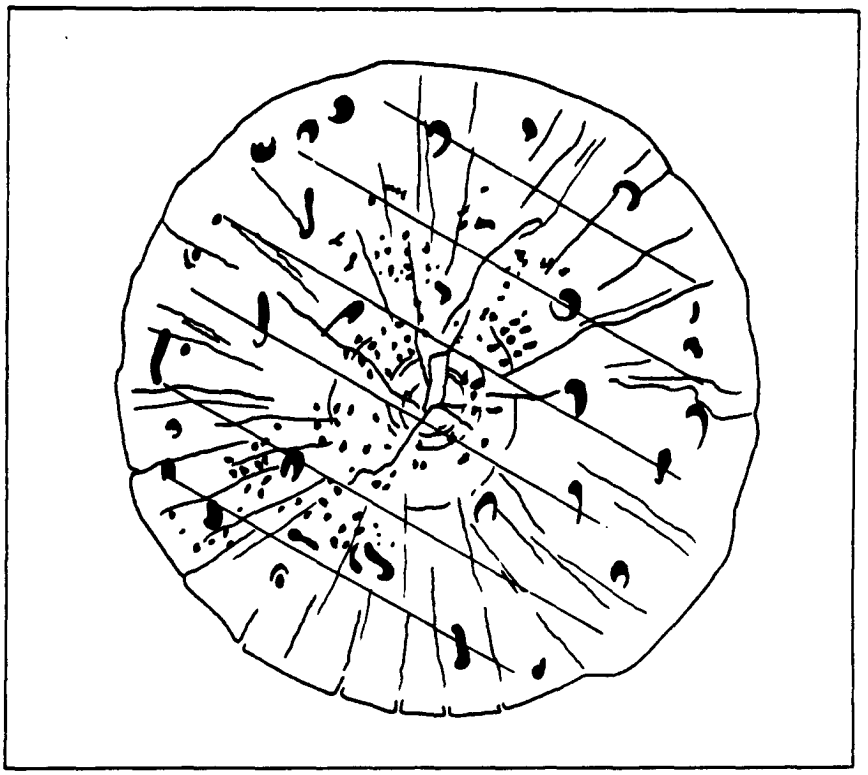

Figure 8-2 Marine borer damage to timber pile

durable species, is rapidly attacked by wood-destroying organisms. It is better, particularly in the tropics, to use preservative treatment rather than to rely on natural resistance.

b. Protection from decay and insects. The most effective prevention against decay is by applying creosote or other treatment to poison the food supply of insects. Charring the surface of the timber when practicable may provide protection against termites.

c. Protection from marine borers. Leaving the bark intact on untreated piles affords some protection. Bark adheres best to timber which is cut in the fall or winter. Creosoting will afford protection for five to ten years against some species of marine borers. With other species, it is necessary to encase the pile in concrete or sheath it in copper throughout With the activity zone (mud line to the high waterline).

d. Protection from mechanical forces. Pile fenders and dolphins are widely used to protect pile foundations against floating objects. Pile sheathing may be used to protect against damaging erosion.

e. Protection from fire. The danger of fire may be reduced when designing large waterfront structures by dividing the facility into unite with fire walls or bulkheads which extend from the underside of the deck to a level below the low waterline. On permanent structures, foam extinguishers should be installed.

8-3. Preservative treatment.

The life of timber piles is greatly lengthened by treatment with preservatives. Creosote oil

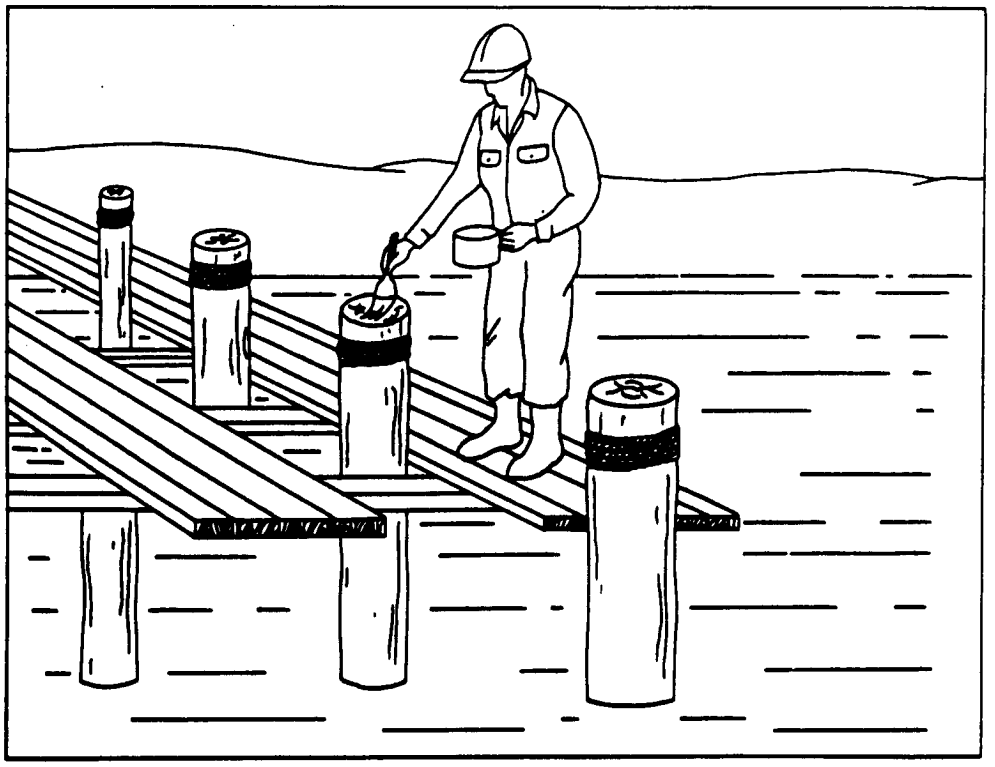

Figure 8-3 Brush application of preservative to cutoff ends

is the most satisfactory material for treating timber piles and is most likely to be available in military situations. Various other chemicals, such as copper sulfate and zinc chloride, are poisonous to animal life. Since most of these chemicals are soluble in water, they leach out, rapidly losing their protective effect.

a. Application. Wherever possible, all piling, as well as other timber members, should be treated at a preservative plant, normally located alongside a sawmill, before being dispatched to the site on which they are to be used. Piles intended for preservative treatment should have all of the outer bark and at least 80 percent of the inner bark removed. Remaining strips of inner bark should not be more than ¾-inch wide nor more than 8 inches long.

b. Handling. Care must be taken in handling treated timber to minimize the disturbance of the treated surface. The effectiveness of the treatment depends on keeping the creosoted surface unbroken. Timber hooks, pile poles, and the like are not used on treated timbers. If the surface must be punctured or cut, as in notching to apply a brace, protection is partly restored by mopping on two or more coats of creosote oil at a temperature between 175° F and 200°F. Methods of applying preservatives are the brush and pressure methods.

(1) *Brush method.* The least satisfactory method of treatment is the brush method (figure 8-3), in which the preservative is liberally applied like paint. The preservative penetration obtained by this method is slight. Some improvement over the brush

method is obtained by dipping the pile into hot creosote.

- 'The chief use of hand applications is in treating cuts or borings made on treated members during fabrication of a structure. Such cutting should be avoided as much as possible, since it is important that an unbroken shell of preservative be maintained for adequate protection. Any cuts that cannot be avoided should receive careful attention.

- Particular attention should be given to the protection of butt ends of treated timber piles when they are cut off. If the butt is to be exposed at the cutoff, as in fender piles, the end of the pile may be protected. The cutoff end should be brushed liberally with two coats of hot creosote oil, followed by a heavy coat of coal-tar pitch (figure 8-3). Protection is increased by applying two or three layers of pitch-soaked canvas coated with sealing compound. It is desirable to renew the protective coating every year by two heavy applications of hot creosote.

- Treated piles that are to be capped stir cutting should be protected by application of hot creosote oil and tar pitch. It is desirable to place a sheet of heavy roofing paper or a metallic cap over the butt of the pile before placing a timber cap.

- Where treated piles in a foundation are cut off before receiving a footing, the cutoff should be given two heavy coats of hot creosote oil, allowing sufficient time between applications for absorption.

(2) *Pressure method.* The most satisfactory and enduring treatments are those carried out in plants with equipment for pressure processes. Specifications normally require a 12-pound retention of creosote per cubic foot of wood. Considerable equipment is required. The method is not described because it is impractical for military operations. Pressure-treated piles should be used for all marine construction and wherever possible in deliberate construction.

8-4. Concrete encasement.

Effective protection can be provided by encasing timber piles in concrete, usually by grouting the annular space between the pile and a section of pipe. Precast concrete jackets have been designed and used for permanent installations. Concrete jackets have also been formed by shooting concrete (guniting) on timber piles, either before or after driving. The protective coating is generally from 1½ to 2-inches thick and reinforced with wire mesh. Protection provided to the pile is excellent.

8-5. Sheathing.

Metallic sheathing is effective only if it is free from holes. The protection provided is not permanent. Metal casings are sometimes used around piles. The pile is prepared and driven, and the metal casing is slipped down around the pile after the driver has been removed. The space between the pile and the casing is then filled with concrete. For timber sheet piles, a layer of tar paper sealed with mop-coated bituminous material and protected by a wood sheathing placed over the face of the piling. A thick coating of bituminous material is effective as long as the coating remains intact. This protection may last for hasty construction in water infested by marine borers. A longer-lasting method is to wrap the pile with burlap or tar paper over the coating and add another coating.

8-6. Periodic inspection.

Periodic inspection of pile foundations after installation is important. Damage detected early can be more easily and economically

repaired than later. For temporary waterfront structures, inspection of the piling down to the low water level may be sufficient. For important, permanent structures, inspection down to the mud line should be made by divers or by pulling a pile. The effects of marine borers should be watched carefully since deterioration may proceed very rapidly once they have entered the pile. Deterioration due to other causes may be accelerated by borer damage. With some types of borers, damage can be detected only by cutting the wood. In such cases, it is valuable to drive a pile like that used in the structure a short distance below the mud line. It may be pulled and inspected periodically.

Section II. STEEL PILES

8-7. Damage and deterioration.

The life of steel piles is generally not a matter of concern in temporary military structures. When a structure of longer life is involved or exposure conditions are severe, the load-carrying capacity and useful life of a steel pile may be reduced by corrosion or abrasion.

a. Corrosion. Corrosion is caused by the tendency of metals to revert from their free state to the combined form in which they normally occur as ores. It is caused by a difference in potential between two points on a conducting material in the presence of an electrolyte. In the case of a steel pile, the anode is the corroding surface; and the interior portion of the metal is the cathode. Corrosion may also be caused by sulphate-reducing bacteria which are widely distributed in soils and natural waters. The rate of corrosion vanes sharply with the soil, depth of embedment, water content, or the nature of the water in which the pile may be immersed.

- Steel piles in contact with undisturbed soil below the groundwater level will not be subject to significant corrosion.
- Steel piles are subject to corrosion only when extending through fresh water polluted by industrial wastes which contain large amounts of corrosive acids.
- Deterioration of steel piles in seawater can be rapid when waves spray salt deposits on the piles. The zone of most active corrosion lies between the low-tide and high-tide levels.
- Steel piles are subjected to rusting when exposed to the air at the ground line and for several feet beneath the ground surface.

b. Abrasion. Corrosion is accelerated by abrasion caused by waterborne sand or gravel which is agitated by tidal action. Abrasion alone is not a serious problem, except that when it damages the protective covering of the pile, corrosion proceeds more rapidly. Timber cladding offers temporary protection.

8-8. Preventive measures.

a. Bitumastic surfacing. It is often desirable to provide a protective coating over a portion of a steel pile. Paints used on structural steel generally do not provide sufficient protection under severe corrosive conditions. Some special paints, when available, are used with greater success. Coal-tar pitch or a bitumastic paint (hot or cold) is applied to the active zone before the pile is driven. The portions exposed to the air are maintained like other steel structures. The success of surface coating depends upon keeping the protective surface intact. If any cracks or pinholes are left in the coating, heavy corrosive attack may occur at such points. The surface must be prepared, and the material applied evenly and completely.

b. Concrete encasement. Positive protection against severe corrosion, particularly where abrasion is a contributing factor, can be provided by encasing a steel pile in concrete

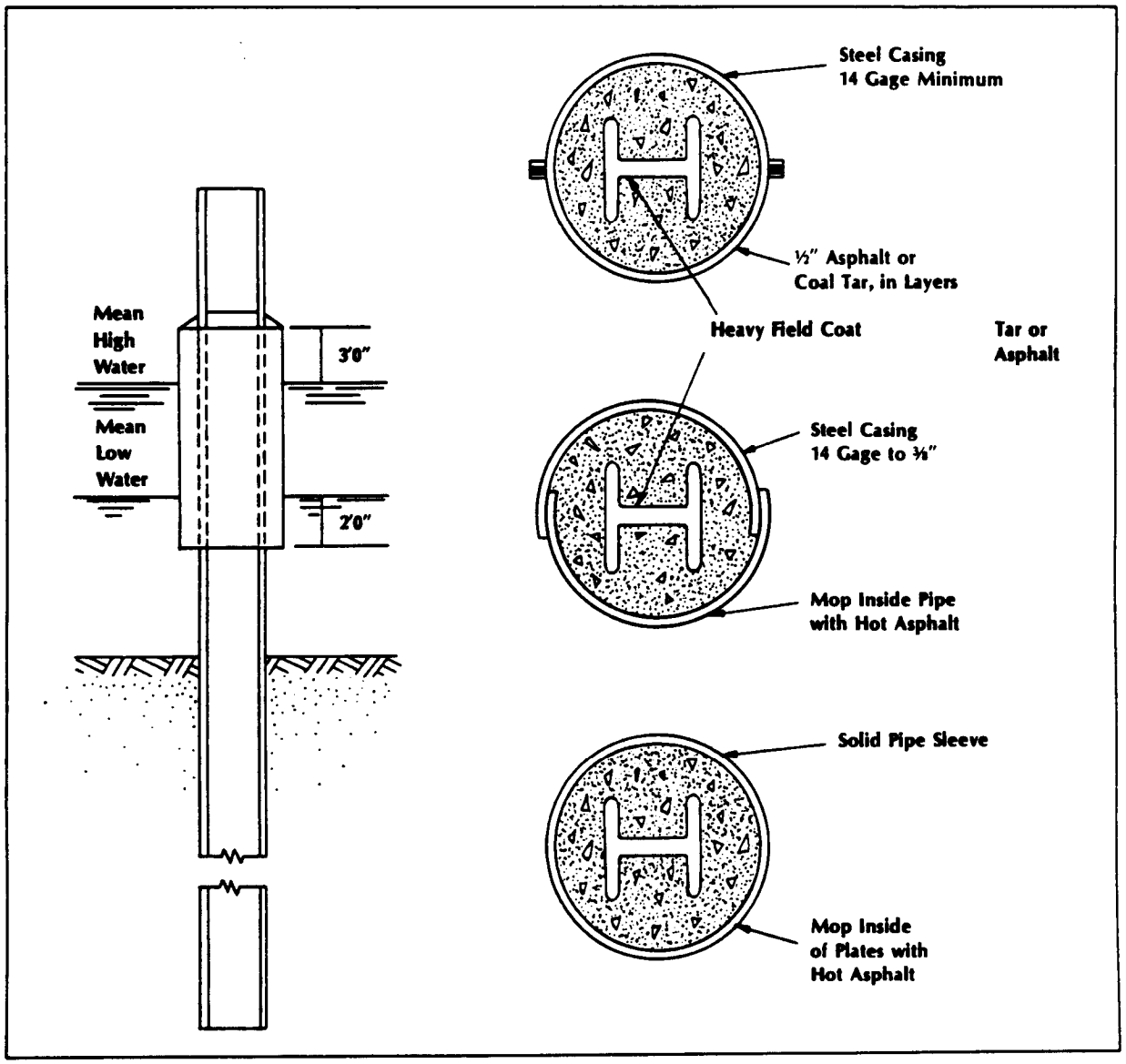

Figure 8-4 Typical concrete encasements of steel piles

over the length under the greatest attack. Poured concrete encasements are used most often (figure 8-4). A metal form is placed around the pile over the desired length of protection, and the form is filled with dense concrete. Protection is from 2 feet below mean low water to 3 feet or more above mean high water. The metal form may be left in place, thus providing additional protection. Many other schemes have been used to form a concrete jacket around steel piles on permanent and important structures. Details of these methods are beyond the scope of this manual.

c. Other measures. For temporary structures where severe corrosion is expected, an obvious solution is to increase the size of

steel piles. If piles are designed as columns, working stresses used in the design may be reduced in anticipation of future reductions in sections caused by corrosion, thus achieving a similar result. Cathodic protection, if used correctly, will solve many corrosion problems; however, it is seldom practical in military structures.

8-9. Inspection.

Steel piles which form a part of a permanent structure should be inspected periodically, particularly in waterfront structures. Careful attention must be given to the zone where the most severe corrosion is likely to occur to detect damage as early as possible and to apply remedial measures. If a protective coating or concrete encasement is used, its condition should be checked periodically to make sure that it continues to fulfill its intended function. Inspection to low water may be adequate in many cases; in other cases, inspection by divers should be earned out to the mud line. As with timber piles, it may be desirable to pull a pile for inspection.

Section III. CONCRETE PILES

8-10. Damage and deterioration.

Groundwater may contain destructive acids, alkalies, or salts which damage concrete. High concentrations of magnesium or sodium sulphate salts are particularly destructive. In humid regions, moisture penetrates the portion of the pile exposed to the air and causes the steel reinforcement to rust and the concrete to span on the surface. Alternate thawing and freezing accelerates deterioration as water in the voids or cracks in the concrete freezes, creating an expansive force which furthers cracking and spalling. Occasionally, concrete piles in salt water are damaged by rock-boring mollusks (pholads), similar to marine borers that attack timber piles. The greatest damage to concrete piles is caused by the rusting of the reinforcement steel and consequent cracking and spalling of the concrete. Prestressed piles tend to be more durable, as tension cracking is minimized.

8-11. Preventive measures.

Deterioration and damage are most pronounced in piles of poor quality concrete. Generally, difficulties do not arise if a dense, impervious concrete mix is used and if the steel reinforcement is provided with an adequate (2 to 3 inches) cover of concrete. Careful handling and placing of precast piles will avert excessive stresses and subsequent cracking. When concrete piles are subjected to abrasion, metal shielding or timber cladding is used in the area of greatest exposure.

8-12. Periodic inspection.

As with other types of pile foundations, a careful watch should be kept for signs of deterioration, particularly for spalling of the concrete and deterioration of the reinforcing steel.

Section IV. REHABILITATION

8-13. Considerations.

Pile foundations may be destroyed or damaged by deterioration or explosive action in a tactical situation. In either case, it is necessary to evaluate the situation and determine what to do. Most discussion in this section applies to all types of piles. Evaluating factors are as follows.

- Is the pile foundation capable of supporting the loads anticipated without rehabilitation?
- If the pile foundation has a limited capacity, what load limits can it carry without damage to the foundation?

- Has the load-carrying capacity of the pile foundation been reduced so seriously that its satisfactory use is impractical? In such a case, it may be possible to repair the existing piles or drive new piles.

8-14. Evaluations.

The objective of an evaluation is to obtain all information possible to evaluate the load-carrying capacity of the foundation and to determine the most efficient rehabilitation procedures. Attention should be given to the number and type of piles; size and alignment external damage, such as the twisting or breaking from explosive charges; deterioration which may have taken place in the areas of critical exposure; and underlying soil conditions. Examine the remaining portions of the superstructure, classify it, and calculate the loads for which the superstructure was originally designed. If the original design followed good engineering practice for the materials, construction, and design load, the piles are assumed to be able to carry loads for which they were designed, less the effects of damage or deterioration. Details for this process are contained in FM 5-36 and TM 5-312 for bridges and in TM-360 for port and harbor structures. This estimate is appropriate for buildings unless they are unusually heavy structures.

8-16. Replacement and repair.

Five procedures are used in replacing and repairing foundation piles.

a. Replacing damaged piles. If a wharf, pier, or span can support the weight of a pile driver, several floor planks are removed; and the new piles are placed and driven through the hole. When an entire bent is replaced, it is capped and wedged tightly against the existing stringers.

b. Adding bents above the waterline. Timber piles damaged or deteriorated above the high waterline can be cut off level and capped with a trestle bent to attain the elevation of the old stringers.

c. Using concrete extension piles. Another method of rehabilitating timber piles damaged above the waterline is to cut off the damaged pile, shape the butt end (tenon), and add an upper concrete section.

d. Using cutoff and splice. Upper portions of damaged or deteriorated piles may be repaired by cutting them off level and splicing them. When long, unsupported timber piles are spliced with timber, the bending strength at the splice usually is much less than that of the unspliced pile. A stronger splice can be obtained with a reinforced concrete encasement. To make this type of splice, four 6-inch straps are bolted across the splice joint to hold together the two sections of timber pile. The ends of ten to twelve 6-foot reinforcing steel bars (¾ inch) are bent, and the bars are placed longitudinally across the splice joint. The ends are driven several inches into the pile. A cage of No. 10 wire mesh (4 inches x 6 inches), the same length as the unbent portion of reinforcing bar, is fastened to the bars. Five or six turns of wire are fastened to the top and bottom of the cage and stapled to the pile. A sheetmetal form is then placed around the reinforcement for 5 inches of concrete encasement around the splice. Bituminous material is used to seal the joint between the concrete encasement and the pile after the form is removed (figure 8-5).

e. Reconstructing damaged concrete piles. Damaged portions of concrete piles may be cut off with the original reinforcing bars extending above the concrete cutoff level. Forms are placed, reinforcement is added, and the piles are extended to the necessary level as described in chapter 2, section IV.

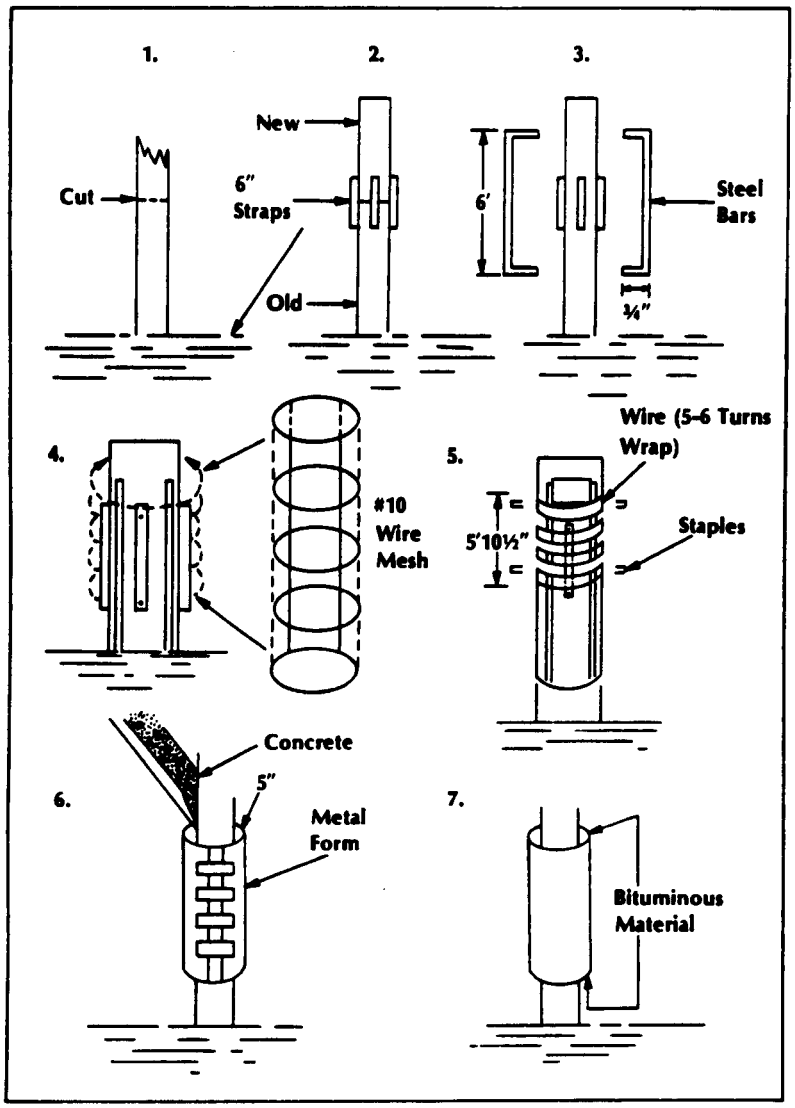

Figure 8-5 Timber splicing using reinforced concrete

APPENDIX
WOODS USED AS PILES

A-1. Local timber.

Throughout the world many varieties of wood are used for piles. Some woods are commonly used, and their properties have been thoroughly evaluated and reported. Others are used locally. Little information about them is available in engineering literature. When it is possible to use local woods, consult local sources of information to determine their suitability. This appendix presents information concerning the woods most commonly used. The woods mentioned here are identified by their common names. Local terms frequently designate different varieties of the woods, and locally available woods are not discussed here.

A-2. North American timber.

a. *Douglas fir* covers many varieties found principally in the western part of the United States. This wood is very strong and is excellent for piles. The heartwood is resistant to decay. Treatment ranges from difficult to moderate, generally requiring pressure for effective penetration. Creosoting is necessary, as with most North American woods, to provide some protection against borers. Fir is available in long lengths.

b. *Southern pine* has many varieties, including longleaf and shortleaf, and is good for piles. The heartwood is moderately decay resistant. This wood takes preservatives well. Treatment is necessary to provide resistance to borers.

c. *Cypress* (southern) comes from the swamps of the Gulf and Atlantic coasts and the Mississippi Valley. Tidewater red cypress is more durable than either the yellow or white variety. The heartwood of cypress is very resistant to decay. The sapwood is thin; hence the piles should be durable. Treatment with preservatives is difficult but can be done when the sapwood is thick. Cypress has medium strength.

d. *Oak* has been used for various types of short piles. Oak is expensive in many areas. There are many types of oak, varying in characteristics. Meet varieties are strong, durable, and quite resistant to decay. They must be creosoted to prevent borer attack, and the difficulty of treatment varies. Oak corrodes steel and iron.

e. *Lurch,* a softwood which has moderate to high strength, is tough and durable, even when alternately wet and dry. It is difficult to treat with preservatives. Western larch, found in the United States, compares favorably with European larch.

f. *Redwood* is a softwood of medium strength, not widely used for piles. It has little resistance to borers and can be treated with only moderate difficulty.

g. *Mangrove, palm,* and *palmetto* have been used in the southern United States, principally because they have shown some resistance to attack by borers. They are very soft and are generally jetted into place, They are unable to withstand normal driving. Piles of this type have low strength and are used to support very light loads. They are susceptible to decay above the waterline.

h. Other woods which have been used for piles are *cedar, cottonwood, elm, various gums,* and *maple.*

A-3. Central and South American timber.

a. *Angelique* is wood of Surinam which has considerable resistance to borers in tropical waters. It contains silica, which aids in borer resistance.

b. *Black kakarali* is a hard, dense wood used in Guyana for waterfront structures. It has good resistance to borer attack.

c. *Foengo* is from Surinam and has good resistance to borers in structures located in the Canal Zone.

d. *Greenheart* from Guyana and Surinam is an excellent wood for piles for marine structures. It is resistant to borers, particularly in temperate zones. This is probably due to the alkaloid it contains. Greenheart is resistant to treatment since it is dense and close grained.

e. *Mahogany* is an excellent wood for piles since it has high strength and durability. It is found in various parts of Central and South America.

f. *Manbarklak* comes from Surinam. It is hard and heavy. It has a high silica content and offers good resistance to borer attack. It has good service records in both tropic and temperate waters.

g. *Mangrove, palm,* and *palmetto* are used in various areas of Central and South America.

h. *Purpleheart* is found in Trinidad, Guyana, French Guiana, and Surinam. It is resistant to decay, but more susceptible to borers than greenheart.

A-4. European timber.

a. *Larch* is one of the toughest and most durable of the European woods. It is a softwood, although one of the denser and harder types. It can be treated with preservatives by pressure methods.

b. *Northern pine* is given many local names and exists in several varieties. It is generally strong, elastic, and quite durable.

c. *Norway* pine is similar to Northern pine and has medium strength.

d. *English oak* is strong, tough, and durable. It is seldom available in long lengths and is expensive for ordinary use. It will corrode iron or steel fastenings.

e. *Alder* is quite durable when completely submerged but susceptible to decay when alternately wet and dry. It is easy to treat and has moderate strength and resistance to borer attack.

f. *Elm* is usually strong and tough. Some species are quite resilient, which has led to some use of piles of this type as fenders on waterfront structures. Elm is fairly durable and can be treated with preservatives, offering fair resistance to borers.

g. *Kail* has low strength and is not widely used for piles when other woods are available.

h. *White deal* has been used for piles, but has low strength.

i. Many different *firs, spruces,* and *pines* are used locally in Europe, and some are exported. They are softwoods, but give reasonably good service when creosoted.

A-5. African timber.

Many different woods are used locally in Africa. Little information is available as to their properties. Local inquiry should be made to determine the suitability of a particular wood for use in pile structures.

A-6. Asian timber.

a. *Teak* is a hardwood found in many parts of Asia. It has high strength and durability and makes excellent piles where available.

b. *Eng* is found in various countries and has been used as a substitute for teak. It has medium strength and durability when treated.

c. *Mahogany,* found in various parts of Asia, is an excellent strong and durable wood for piles. It is extremely resistant to penetration of preservatives. Philippine mahogany is an example of this type of wood in Asia.

d. *Sal* is found in India and is used in waterfront structures. It has high strength and durability.

e. *Acle* is found in India and has high strength and good resistance to borers. It is widely used in marine structures.

f. *Pyinkado* is a Burmese hardwood having good strength and durability. It is extremely resistant to the penetration of preservative materials.

g. *Kolaka* is found in the Celebes and is used for piles in Indonesia. It is high in silica content, thus is generally resistant to borers.

h. *Chir* is Indian wood used for piles. It has medium strength.

i. *Deodar* is used in India and has medium strength and durability.

j. *Peon* is an Indian wood with medium strength and durability.

k. *Jarul* is used to some extend in India and has high strength.

l. *White siris* is an Indian wood of high strength and durability.

A-7. Australian timber.

a. *Ironbark* has medium strength and good durability.

b. *Jarrah* is dense, impermeable wood. It has medium strength and high durability.

c. *Karri,* for use in pile structures, has properties similar to those of jarrah.

d. *Tallow wood* is a very dense, impermeable species having good durability.

e. *Turpentine wood* is dense, impermeable, and durable. Resistance to borers lies in the properties of the bark, which must not be removed or damaged.

f. *White* or *red gum* has medium strength and high durability.

g. *Totara* is a New Zealand wood with good resistance to borer attack.

h. Other woods are available in this area of the world. For example, Australia has many varieties of *eucalyptus* that are more resistant to borers than oak or pine.

R E F E R E N C E S

I. REQUIRED PUBLICATIONS. Required publications are sources that users must read in order to understand or to comply with this publication.

Technical Manuals (TM).

TM 5-303	Army Facilities Components System Logistic Data and Bills of Materials
TM 5-312	Military Fixed Bridges
TM 5-545	Geology
TM 5-852-4	Arctic and Subarctic Construction Foundations for Structures

II. RELATED PUBLICATIONS. Related publications are sources of additional information. They are not required in order to understand this publication.

Army Regulations (AR).

AR 310-25	Dictionary of United States Army Terms
AR 310-50	Catalog of Abbreviations and Brevity Codes

Field Manuals (FM).

FM 5-35	Engineer's Reference and Logistical Data
FM 5-36	Route Reconnaissance and Classification

Technical Manuals (TM).

TM 5-301-1	Army Facilities Components System-Planning (Temperate)
TM 5-301-2	Army Facilities Components System-Planning (Tropical)
TM 5-301-3	Army Facilities Components System-Planning (Frigid)
TM 5-301-4	Army Facilities Components System-Planning (Desert)
TM 5-302-1	Army Facilities Components System-Design, Vol 1
TM 5-302-2	Army Facilities Components System-Design, Vol 2
TM 5-349	Arctic Construction
TM 5-360	Port Construction and Rehabilitation
TM 5-742	Concrete and Masonry

Engineer Manuals (EM).

EM 1110-2-2906	Design of Pile Structures and Foundations, US Army Corps of Engineers

Available from: OCE Publication Depot
890 South Pickett Street
Alexandria, VA 22304

Navy Publications.

NAVFAC DM-7.1	Soil Mechanics
NAVFAC DM-7.2	Foundations and Earth Structures
NAVFAC DM-7.3	Stabilization and Special Geotechnical Construction

Available from: Department of the Navy
Naval Facilities Engineering Command
200 Stovall Street
Alexandria, VA 22332

GLOSSARY

Section I. DEFINITIONS

Adapters. Devices used to attach leads to the point of a crane boom.

Allowable load. The load which maybe safely applied to a pile based on bearing capacity and settlement.

Anchor pile. A pile used to resist tension or uplift loads.

Anvil. The part of a power-operated hammer which receives the blow of the ram and transmits it to the pile.

Batter pile. A pile driven at an angle to the vertical.

Bearing pile. A pile driven or formed in the ground for transmitting the weight of a structure to the soil by the resistance developed at the pile point or base and by friction along its sides.

Bent. **A** structural member or framework used for strengthening a bridge or trestle transversely.

Bracing. A system of inclined or horizontal structure members fastened to the piles of a bent or a row to increase stability.

Brooming. Separation of fibers (usually at butt or tip of a timber pile) caused by improper driving.

Cast-in-place pile. A pile formed by excavating or drilling a hole and filling it with concrete.

Compaction pile. A pile driven to increase the density of very loose, cohesionless soil.

Composite pile. A pile formed of one material in the lower section and another in the upper.

Concrete piles. Piles made of concrete aggregate either cast-in-place or precast.

Concrete sheet piles. Reinforced precast piles of rectangular cross section with tongue-and-groove interlocks.

Cushion. A block inserted between the hammer and the top of the pile to minimize damage. Cushions can be wood, belting, old rope, or other shock-absorbent materials.

Dap. Incision or notch cut in timber, into which the head of a pile or other timber is fitted.

Diesel hammer. A stationary cylinder and a cylinder which is driven upward by a diesel fuel explosion. Open-end and closed-end types are used.

Dolphin. Piles driven close together in water and tied together. The group is capable of withstanding lateral forces from vessels and other floating objects.

Drop hammer. A weight with grooves in the sides, that falls on the end of the pile when driving.

Dynamic pile formulas. Equations which provide empirical determination of the approximate load-carrying capacity of a bearing pile, based upon the behavior of the pile during driving. The formula of principal value to the military engineer is the Engineering News formula.

End-bearing pile. A pile that derives its support from an underlying firm stratum.

Fender pile. A pile driven in front of a structure to protect it from damage from floating objects or to absorb shock from impact.

Floating pile drivers. Pile drivers mounted on barges, rafts, or pneumatic floats. A floating crane may be used as a pile driver when fitted with pile-driving attachments.

Follower. A member between the hammer and the pile to transmit blows to the pile when the top of the pile is below the reach of the hammer.

Fore-batter guide. A beam extending from the forward end of the frame of a steel-frame, skid-mounted pile driver to the leads.

Friction pile. A pile which derives its support from skin friction between the surface of the pile and the surrounding soil.

Guide pile. A pile which guides driving of other piles or supports wales for sheet piling.

H-piles. Steel H-sections used as bearing piles.

Heaving. Uplifting of earth, between or near piles, caused by pile driving. Also, uplifting of driven piles in such a mass of earth.

Helmet. A temporary steel cap placed on top of a concrete pile to minimize damage to the head during driving.

Jetting. A method of forcing water around and under a pile to loosen and displace the surrounding soil.

Lagging. Plates, strips, or blocks fastened to a pile to increase its load-carrying capacity.

Lead braces. Structural members used to fasten the leads to the base of the crane boom.

Leads. A frame (upright or inclined) which supports sheaves at the top for hoisting the pile and hammer. The leads are equipped with parallel members for guiding the pile and hammer. They may be fixed, swinging, or hanging, depending on how they are attached to the pile driver.

Log hammer. An expedient pile-driving hammer made up of hardwood and a steel base plate.

Moon beam. A slightly curved beam placed transversely at the forward end of the pile driver to regulate side batter.

Pile. Load-bearing member of timber, steel, concrete, or a combination forced into the ground to support a structure.

Pile bent. Two or more piles driven in a row transverse to the long dimension of the structure and fastened together by capping and bracing.

Pile cap. A masonry, timber, or concrete footing formed to transmit the load from the structure to the pile group.

Pile driver. A machine with a drop, steam, diesel, or pneumatic hammer with hoisting apparatus, leads, and frame for driving piles. The machine may be placed on skids, a float, a railroad car, or other mountings.

Pile-driving cap. A device placed on top of a pile to protect the pile and facilitate driving. It is also referred to as a pile-driving helmet.

Pile-driving hammer. See drop hammer and pneumatic or steam hammer.

Pile extractor. A device used to pull piles, usually an inverted steam or air hammer with yoke equipped to transmit upward pulls to the piles.

Pile foundation. A group of piles ueed to support a column or pier, a row of piles under a wall, or a number of piles distributed over a large area to support a mat foundation.

Pile group. Bearing piles driven close together to forma pile foundation.

Pile line. A line (rope or cable) to lift a pile and hold it in place during the early stages of driving.

Pile load test. A field load test conducted on a pile to determine its load-carrying capacity.

Pile shoe. A metal protection for the foot of a pile used to prevent damage or to obtain greater penetration when driving into or through hard stratum.

Pipe piles. Steel pipe sections used as bearing piles.

Pneumatic or steam hammer. A stationary cylinder and a moving part, (the ram) which includes the piston and striking head. Both single-acting and double-acting hammers are used.

Precast concrete piles. A reinforced or precast concrete pile cast and thoroughly cured before driving.

Rail piles. Steel railroad rails used as bearing or sheet piles in expedient situations.

Ram. The rising and falling part of the hammer which delivers the blow.

Refusal. The condition when a pile driven by a hammer has zero penetration (as when a point of the pile reaches an impenetrable stratum such as rock) or when the effective energy of the hammer blow is no longer sufficient to cause penetration (as when the hammer is too light or its velocity at impact is not adequate). The pile may cease to penetrate before it has reached the desired supporting power. "Refusal" may indicate the specified minimum penetration per blow.

Scour. The undermining of a pile foundation by the action of flowing water.

Set. The net distance by which the pile penetrates into the ground at each blow of the hammer.

Set-load curve. A curve showing the relationship between set and load for a given set of conditions and a given dynamic pile formula.

Settlement. The amount of downward movement of the foundation of a structure or a part of a structure under conditions of applied loading.

Soil profile. A graphic representation of a vertical cross section of the soil layers below ground surface,

Spliced pile. A pile composed of two or more separate lengths secured together, end to end, to form one pile.

Spotter. A horizontal member connecting the base of fixed leads to the base of the crane boom. The spotter can be extended or retracted to permit driving piles on a batter and also to plumb the leads over the location of a vertical pile.

Springing. Excessive lateral vibration of a pile.

Spud. A short, strong member driven and then removed to make a hole (for inserting a pile that is too long to place directly in the pile driver leads) or to break through a crust of hard material. Also a movable vertical pipe or H-section placed through a strong frame on a floating pile driver or dredge to hold the vessel in position.

Spudding. The operation of raising and dropping a heavy pile to break through a thin layer of hard material or an obstruction.

Steam hammer. See pneumatic or steam hammer.

Steel bearing piles. Rolled or fabricated sections used as piles.

Steel-frame, skid-mounted pile driver. A pile driver mounted on skids and made up of steel members.

Steel sheet piles. Steel shapes, rolled or fabricated, which become interlocked as they are successively driven, thereby forming a continuous wall or cell which is capable of sustaining lateral loads and resisting forces tending to separate them.

Stringer. A member at right angles to, and resting on, pile caps or clamps and forming a support for the superstructure.

Tension pile. See anchor pile.

Test pile. A pile driven to determine driving conditions and required lengths. Also a loading test may be made to determine the load-settlement characteristics of the pile and surrounding soil.

Timber pile. A bearing pile of timber, usually straight tree trunks cut off above groundswell with branches closely trimmed and bark removed.

Timber pile driver. An expedient pile driver made up of dimensioned lumber.

Treated timber pile. A timber pile impregnated with a preservative that retards or prevents deterioration due to organisms.

Tripod pile driver. An expedient pile driver made up of local timber and usually hand operated.

Ultimate bearing capacity. The maximum load which a single pile will support. The load at which the soil cannot be penetrated.

Wakefield sheet piling. Timber sheet piles of three planks bolted or spiked together. The middle plank is offset, forming a tongue on one side and a groove on the other.

Wale. A member extending along a row of piles and fastened to them which serves as a spacer for the piles or support for other members. In a fender it absorbs shock and protects a structure or floating craft from floating objects. It is also called waler or ranger.

Welded-angle pile driver. An expedient pile driver made up of steel angles welded or bolted together.

Wood-frame, skid-mounted pile driver. A pile driver mounted on skids and made up of timbers.

Section II. ACRONYMS, ABBREVIATIONS, AND SYMBOLS

Acronyms and Abbreviations.

A	area
AFCS	Army Facilities Components System
Approx	approximately
ASTM	American Society for Testing and Materials
CRP	constant rate of penetration
D	diameter
DA	deep arch
DB	doubh+acting steam hammer
DE	diesel
DF	differential-acting steam hammer
dia	diameter
el	elevation
F	allowable compression stress
FS	factor of safety
ft	foot
fp	fixed point
ga	gage
gpm	gallons per minute
GWT	ground water table

h	height
in	inch
incl	including
lb	pound
L	length
MA	medium arch
max	maximum
MHW	mean high water
min	minimum
MLW	mean low water
n	number
OC	on center
od	outside diameter
P	perimeter
pcf	pounds per cubic foot
psf	pounds per square foot
psi	pounds per square inch
R	radius
s	straight web
SA	shallow arch
SPT	Standard Penetration Test
sq	square
TOE	table of organization and equipment
w/	with

WF	wide flange
Z	Zee section

Symbols.

A = cross-sectional area of a pile in square inches

A_p = cross-sectional area of a pile in square feet

A_s = shaft area

a = adfreezing strength

b = diameter of pier in feet

c_c = compression index

c = tons per square foot

c_x = distance from Y-Y axis to pile for which P, is being calculated

c_y = distance from X-X axis to pile for which P, is being calculated

D = diameter (used in formula)

d = average diameter in inches measured at one-third of the pile length from the butt

E = elasticity of wood species in psi

e = driving energy in foot pounds

e_o = initial void ratio

e_x = distance from point of intersection of resultant with plane of base of structure to Y-Y axis

e_Y = distance from point of intersection of resultant with plane of base of structure to X-X axis

F_C = allowable compression stress parallel to grain

H = thickness of the clay layer in feet

ΔH = ultimate decrease in thickness of a confined clay layer due to consolidation in feet (also, settlement of the structure)

I = least moment of inertia in inches

I_x = moment of inertia of pile group about X-X axis

I_y = moment of inertia of pile group about Y-Y axis

K_C = earth pressure coefficient

K_p = passive earth pressure coefficient

l_u = unsupported length in inches

ΣM = summation of all moments about the center of gravity of pile group at the level of pile fixity due to ΣV and ΔH

N = number of blows per foot

n = number of piles

N_q = bearing capacity factor

P = perimeter of group

P_a = axial component of pile load

P_h = horizontal component of pile load

P_1 = final pressure in tons per square foot

P_o = initial pressure in tons per square foot

P_v = vertical load on any pile

Q_{all} = safe load in pounds

Q_u = ultimate bearing capacity of group

R = resultant

r = least radius of gyration in inches

S = pile spacing in feet

s = average net penetration or pile set, in inches, per blow for the last 6 inches of driving

v = resultant of all vertical loads on pile group

ΣV = summation of all vertical loads

w = weight of striking parts in pounds

W_L = liquid limit

x = coefficient of horizontal batter

y = coefficient of vertical batter

θ = angle of the batter

δ = angle of shaft resistance

INDEX

	Page
Accessory equipment	3-22
Adaptation of floating cranes	3-21
Anchoring of pile driver rafts	3-22
Anchor piles	1-3
Availability	
Cast-in-place piles	2-12
Precast concrete piles	2-7
Sheet piles	2-13
Steel sheet piling	2-14
Timber piles	2-3
Batter piles:	
Defined	1-1
Determining distribution of loads	7-6
Loads imposed	7-6
Bearing piles, foundation design:	
Rigid piles in clay	5-13
Rigid piles in sand	5-13
Bridge pile foundations, rehabilitation	8-8
Brush method, preservative treatment of timber	8-4
Building pile maintenance and rehabilitation	8-1
Caps, driving	3-11
Classification of timber piles (table 2-1)	2-2
Cold weather pile driving	4-25
Compaction piles	1-1
Concrete piles, cast-in-place:	
Drilled piers (uncased)	2-13
Durability	2-13
Shell-type (cased)	2-12
Strength	2-13
Concrete piles, cause of damage	8-8
Concrete piles, maintenance	8-8

	Page
Concrete piles, precast:	
Availability	2-10
Curing	2-10
Durability	2-10
Forms	2-9
Handling	2-12
Manufacture	2-8
Placement	2-10
Shipment	2-12
Storage	2-12
Strength	2-10
Types	2-7
Construction, pile:	
Deliberate	1-5, 2-1
Hasty	1-5, 2-1
Corrosion of steel piles	8-6
Cutting and capping of piles:	
Anchoring piles	4-32
Concrete piles	4-30
Steel piles	4-30
Timber piles	4-30
Decay, timber piles	8-1
Definitions	1-1
Deterioration of piles:	
Concrete	8-8
Steel	8-6
Timber	8-1
Determination of resistance in bearing stratum	5-11
Diesel hammers, pile-diriving	3-7
Distribution of loads to piles in a group, foundation design	6-1
Dolphins, defined	1-3
Drilled piles	4-33
Driving (see also pile-driving operations):	
Cold weather	4-25
Driving problems	6-5
Permafrost	4-26
Pile driving in groups	6-1
Sheet piles	4-32
Underwater	4-25
Driving requirements	4-8

	Page
Driving with mobile equipment:	
Bridge or wharf	4-22
Standard trestle, 50-ton	4-25
Temporary earth causeways	4-23
Drop hammers, pile-driving	3-6
Encasement (concrete) of timber piles	8-3,6-5
End-bearing piles, defined	1-1
Equipment for pile driving (see pile-driving equipment)	3-1
Expedient pile drivers	3-15
Fender piles	1-3
Floating pile drivers	3-21
Floating rigs	4-22
Followers, pile	3-14
Friction piles, defined	1-1
Friction piles, in clay (design example)	6-14
H-piles	2-5
Hammers, pile-driving	3-11,3-12
Jacking	4-22
Jetting, equipment	3-23
Lagging, timber piles	4-2
Lagging, steel piles	4-5
Leads, pile-driving	3-2
Lengths of piles, determining for foundations	5-1
Limitations of pile test loads	5-12
Load-carrying capacity of bearing piles (see bearing piles, foundation design)	5-1
Loading procedures:	
Constant rate of penetration method	5-11
Continuous load method	5-10
Maintenance of timber piles	8-1
Marine borers, timber piles	8-2
Materials, piling:	
Army Facilities Component Systems (AFCS)	2-1
Consideration in selecting type	1-4, 2-1
Costs	1-7
Material selection	1-5

	Page
Miscellaneous sheet piles	4-32
Obstructions	4-16
Permafrost, pile installation in	4-26
Piers (definition)	1-1
Pile drivers on barges, pneumatic floats, or rafts	3-21
Pile-driving equipment	
Air hammers	3-6
Assembly	3-26
Boom	3-2
Caps	3-11
Devices, hammer and vibrating driver	3-5
Diesel hammers	3-7
Drop hammers	3-6
Expedient drivers	3-15
Floating drivers	3-21
Followers	3-14
Guides	3-4
Hammers	3-11
Installation	3-1
Jetting	3-23
Leads	3-2
Lead braces	3-13
Power for expedient pile drivers	3-18
Rigs	3-1
Selecting equipment	3-24
Skid frame	3-1
Spotters	3-13
Steel-frame, skid-mounted drivers	3-1
Vibrating drivers/extractors	3-11
Wood-frame, skid-mounted drivers	3-15
Pile-driving operations:	
Alignment	4-12
Batter piles in groups	7-6
Cold weather	4-25
Driving requirements	4-8
General procedures	4-8
Jacking	4-22
Jetting	4-16
Manpower	4-34
Mobile equipment, bridge or wharf	4-22
Mobile equipment, temporary earth causeways	4-23
Obstructions	4-16
Overwater	4-36
Permafrost	4-26
Placing piles by explosives	4-16

	Page
Pile-driving operations:	
Placing piles by jetting	4-16
Production rate	4-34
Pulling piles	4-25
Safety	4-34
Shell-type	4-34
Sheet piles, general	4-32
Spuds	4-22
Tidal lift	4-25
Underwater	4-25
Water	4-22
Pile followers	3-14
Pile foundations:	
Capacity in permafrost	6-8
Clay	6-5
Cohesionless soils	6-2
Driving in groups	6-1
Friction piles in clay	6-8
Group action	6-3
Negative friction or down drag	6-8
Pile spacing	6-10
Piles founded on rock	6-2
Point bearing piles in sands	6-11
Pile load test	5-9
Piles:	
Function	1-3
Selection	1-4
Sizes	1-6
Types	1-6
Piling materials (see materials, piling)	2-1
Pipe piles	2-5
Positioning piles for driving	4-22
Precast concrete piles (see concrete piles, precast)	2-7
Predrilling operations	4-19
Preparation of piles or driving	4-1
Preservative treatment, timber	8-3
Properties of selected impact pile hammers (table 3-2)	3-10
Pulling piles	4-25
Rail pile	2-16

	Page
Rehabilitation:	
Basic considerations	8-8
Evaluation of existing pile foundations	8-9
Replacement and repair	8-9
Selection of diesel hammers for various sizes of piling (table 3-1)	3-6
Sheathing, timber piles	8-5
Sheet piles:	
Availability	2-13
Definition	1-1
Description	1-1
Driving	4-8
Expedient	2-16
Followers	3-14
Uses	2-13
Skid-mounted pile driver	3-1,3-15
Slenderness ratio	5-2
Splicing:	
Steel piles	4-5
Timber piles	4-2
Spuds	4-22
Standard H-piles	2-5
Standard sheet piles	1-1
Steel-frame, skid-mounted pile drivers	3-1
Steel piles:	
Abrasion	8-6
Bitumastic surfacing	8-6
Caps	3-12
Cleaning	4-3
Durability	2-7
Encasement (concrete)	8-6
Follower	3-15
H-piles	2-5
Handling	2-7
Lagging	4-5
Other physical properties	2-5
Periodic inspections	8-8
Preventive measures	8-6
Reinforcing	4-3
Sections, other	2-5
Shipment	2-7
Strength	2-7

	Page
Strength or consistency of undisturbed clays (table 5-1)	5-16
Structural design of piles:	
Allowable pile stresses	5-2
Buckling failure	5-2
Driving stresses	5-2
Lateral loads	5-2
Timber piles:	
Alignment	4-12
Availability	2-3
Concrete encasements	8-5
Damage and deterioration causes	8-1
Decay	8-1
Description	2-1
Deterioration, causes	8-1
Durability	2-3
Fire susceptibility	2-5
Flexibility	2-5
Follower	3-14
Handling	2-5
Lagging	4-2
Maintenance	2-3
Marine borers	2-2
Periodic inspection	8-5
Preparation	4-1
Preservative treatment	8-3
Preventive measures	8-2
Sheathing	8-5
Tabular form for determining load acting on each pile (table 7-1)	7-6
Termites	8-1
Shipment	2-5
Sources	2-3
Splicing	4-2
Strength	2-3
Treatment of field problems encountered during pile driving (table 4-1)	4-13
Tripod pile driver	3-15
Vertical loads, distribution on vertical piles	7-1
Vibratory driver, pile-driving	3-11
Welded-angle pile driver	3-18
Wood-frame, skid-mounted pile drivers	3-15
Working stresses for timber (table 2-3)	2-4
Wrapping timber piles	4-1

18 APRIL 1985

By Order of the Secretary of the Army:

JOHN A. WICKHAM, JR.
General, United States Army
Chief of Staff

Official:

DONALD J. DELANDRO
Brigadier General United States Army
The Adjutant General

DISTRIBUTION:

Active Army, ARNG, and USAR: To be distributed in accordance with DA Form 12-11 A, Requirements for Engineer Construction and Construction Support Units (Qty rqr block no. 33) and DA Form 12-34B, Combat Support (Qty rqr block no. 90).

Additional copies may be requisitioned from the US Army Adjutant General Publications Center, 2800 Eastern Boulevard, Baltimore, MD 21220-2896.

★ U. S. GOVERNMENT PRINTING OFFICE : 1991 0 - 281-486 (43308)