FM 55-10

MOVEMENT CONTROL

DISTRIBUTION RESTRICTION: Approved for public release; distribution is unlimited.

HEADQUARTERS, DEPARTMENT OF THE ARMY

Field Manual
No. 55-10

HEADQUARTERS
DEPARTMENT OF THE ARMY
Washington, DC, 9 FEBRUARY 1999

MOVEMENT CONTROL

TABLE OF CONTENTS

Page

PREFACE v

CHAPTER 1 OPERATIONAL OVERVIEW

Section I. Army Force Projection 1-1
1-1. INTRODUCTION 1-1
1-2. GENERAL SITUATION 1-1
1-3. RECENT OPERATIONS 1-1
1-4. FORCE PROJECTION 1-2

Section II. Strategic Mobility 1-3
1-5. MOBILITY REQUIREMENTS STUDY BOTTOM UP REVIEW UPDATE 1-3
1-6. THE STRATEGIC MOBILITY TRIAD 1-6

CHAPTER 2 MOVEMENT CONTROL OVERVIEW

Section I. Definition of Movement Control 2-1
2-1. INTRODUCTION 2-1
2-2. ELEMENTS OF A TRANSPORTATION SYSTEM 2-1

Section II. Movement Control Principles and Functions 2-2
2-3. PRINCIPLES OF MOVEMENT CONTROL 2-2
2-4. THE FUNCTIONS OF MOVEMENT CONTROL 2-5
2-5. OTHER CONSIDERATIONS 2-8

DISTRIBUTION RESTRICTION: Approved for public release, distribution is unlimited.

***This publication supersedes FM 55-10, 8 December 1992.**

Page

CHAPTER 3 STRATEGIC MOVEMENT CONTROL

3-1. INTRODUCTION....3-1
3-2. US TRANSPORTATION COMMAND....3-1
3-3. COMMAND RESPONSIBILITIES....3-3
3-4. TRANSPORTATION AND LOGISTICS IN A JOINT FORCE....3-4
3-5. THEATER JOINT MOVEMENT CONTROL ORGANIZATIONS....3-6

CHAPTER 4 OPERATIONAL MOVEMENT CONTROL AT ECHELONS ABOVE CORPS

Section I. COMMZ Logistics Structure....4-1
4-1. INTRODUCTION....4-1
4-2. EAC OVERVIEW....4-1
4-3. THEATER SUPPORT COMMAND....4-1
4-4. TRANSPORTATION DIRECTORATE....4-5
4-5. DISTRIBUTION MANAGEMENT CENTER....4-5

Section II. Movement Control in the COMMZ....4-7
4-6. MOVEMENT CONTROL AGENCY....4-7
4-7. MOVEMENT CONTROL BATTALION AT EAC....4-10
4-8. MOVEMENT CONTROL TEAMS....4-12

CHAPTER 5 TACTICAL MOVEMENT CONTROL

Section I. Movement Control in the Corps....5-1
5-1. INTRODUCTION....5-1
5-2. CORPS HEADQUARTERS STAFF....5-2
5-3. CORPS SUPPORT COMMAND....5-3
5-4. MOVEMENT CONTROL BATTALION (CORPS)....5-4
5-5. FUNCTIONAL RELATIONSHIPS....5-8
5-6. MCB AND CSG INTERFACE....5-9
5-7. TRANSPORTATION REQUEST PROCESS....5-10

Section II. Movement Control in the Division....5-11
5-8. INTRODUCTION....5-11
5-9. ORGANIZATION....5-12
5-10. DIVISION TRANSPORTATION OFFICER....5-12
5-11. DIVISION SUPPORT COMMAND....5-14
5-12. MOVEMENT CONTROL OFFICER....5-14
5-13. DTO AND MCO INTERFACE IN THE DIVISION REAR COMMAND POST....5-15
5-14. MOBILITY WARRANT OFFICER....5-16
5-15. MOVEMENT CONTROL NCO....5-16

Page

CHAPTER 6 MOVEMENT CONTROL IN THE FORCE PROJECTION PROCESS

6-1. INTRODUCTION....6-1
6-2. FORCE PROJECTION....6-1
6-3. ENTERING THE THEATER....6-1
6-4. THEATER RECEPTION AND ONWARD MOVEMENTS PROCESS....6-2
6-5. AERIAL PORT OF DEBARKATION....6-4
6-6. AIR-TO-AIR INTERFACE OPERATIONS....6-9
6-7. SEAPORT OF DEBARKATION....6-9
6-8. SURFACE-TO-AIR INTERFACE OPERATIONS....6-11
6-9. ONWARD MOVEMENT OF PRE-POSITIONED MATERIEL....6-12
6-10. MOVEMENT CONTROL DURING REPOSITIONING....6-13
6-11. PLANNING SEQUENCE FOR RECEPTION AND ONWARD MOVEMENT....6-14
6-12. GENERIC SUPPORTING THEATER LOC NODES....6-16

CHAPTER 7 THEATER TRANSPORTATION DISTRIBUTION

Section I. Theater Distribution and Movement Control....7-1
7-1. INTRODUCTION....7-1
7-2. THEATER DISTRIBUTION PLAN....7-1
7-3. MOVEMENT PROGRAM DEVELOPMENT....7-2
7-4. PREPARING THE PORT CLEARANCE PROGRAM....7-3
7-5. ASSESSING THE DISTRIBUTION PLAN....7-4
7-6. DETERMINING REQUIREMENTS....7-4
7-7. DETERMINING CAPABILITIES....7-5
7-8. BALANCING REQUIREMENTS AGAINST CAPABILITIES....7-5
7-9. DETERMINING CRITICAL POINTS....7-6
7-10. SCHEMATICS PROGRAMMING....7-6
7-11. SELECTING A MODE....7-9
7-12. COORDINATING....7-11
7-13. FORMATTING A MOVEMENT PROGRAM....7-12
7-14. EXECUTING THE MOVEMENT PROGRAM....7-14

Section II. Highway Regulation Procedures....7-14
7-15. HIGHWAY REGULATION PLANNING, ROUTING, SCHEDULING, AND MANAGING....7-14
7-16. HIGHWAY REGULATION PLANNING....7-15
7-17. FUNDAMENTALS AND PRINCIPLES OF ROUTING....7-20
7-18. FUNDAMENTALS AND METHODS OF SCHEDULING....7-20

Section III. Sustainment Operations....7-21
7-19. TRANSPORTATION OPERATIONS AT EAC....7-21
7-20. TRANSPORTATION OPERATIONS AT CORPS....7-22
7-21. TRANSPORTATION OPERATIONS AT DIVISION....7-24
7-22. TRANSPORTATION OPERATIONS AT BRIGADE....7-24

Page

Section IV. Intermodal Operations 7-25
7-23. INTERMODALISM 7-25
7-24. CONTAINERIZATION 7-25
7-25. FLATRACKS 7-25
7-26. AIRLIFT 7-25
7-27. AIR CARGO AND AERIAL PORTS 7-25

Section V. Transportation Operations 7-26
7-28. TRANSPORTATION REQUEST PROCEDURES 7-26
7-29. REQUEST FOR THEATER AIRLIFT 7-31
7-30. CLEARANCE REQUESTS 7-37
7-31. COORDINATING MOVEMENTS 7-38
7-32. DIVERTING AND REROUTING 7-38
7-33. LARGE UNIT MOVEMENTS 7-38

APPENDIX A COMMUNICATIONS AND AUTOMATION A-1

APPENDIX B GEOGRAPHICAL CONSIDERATIONS B-1

APPENDIX C TRANSPORTATION MOVEMENT RELEASE C-1

APPENDIX D TABLES OF ORGANIZATION AND EQUIPMENT D-1

APPENDIX E ROAD MOVEMENT PLANNING E-1

GLOSSARY Glossary-1

REFERENCES References-1

INDEX Index-1

PREFACE

This manual describes the organizations, processes, procedures, and systems involved in the control of movements across the military spectrum. The focus of this manual is for the reader to gain an understanding of the movement control system and how it functions from the strategic to the tactical level. It focuses on the planning, controlling, and managing of the use of available modes of transport to move units, equipment, and materiel. It also describes transportation request procedures and how transportation resources are controlled and managed.

This manual remains consistent with Army operations, logistics doctrine, and concepts published in FM 100-5 and FM 100-10. Users acting within the scope of their authority may vary from this doctrine when such variation will result in improved operations.

The Army's environmental strategy into the 21st century defines our philosophy and commitment in protecting and preserving the environment and natural resources for present and future generations. Sound environmental practices and considerations must be integrated into all Army documents, missions, and operations. In keeping with the Army's vision to be a national leader in environmental stewardship, commanders and leaders must ensure that all local, state, federal, and host nation laws and regulations pertaining to the environment are included in the planning process and strictly followed.

The proponent of this publication is HQ TRADOC. Send comments and recommendations on DA Form 2028 (Recommended Changes to Publications and Blank Forms) directly to Commander, US Army Combined Arms Support Command, ATTN: ATCL-AT, 401 1st Street, Suite 227, Fort Lee, Virginia 23801-1511.

Unless this publication states otherwise, masculine nouns and pronouns do not refer exclusively to men.

CHAPTER 1

OPERATIONAL OVERVIEW

Section I. Army Force Projection

1-1. INTRODUCTION. The world situation is ever changing. One factor that has not changed is the need, in support of US national interests, to deploy military forces to overseas locations on a routine basis and for a variety of contingency requirements. This chapter provides a brief summary of the requirements for force deployments in response to situations requiring a concentration of military capabilities outside the continental United States.

1-2. GENERAL SITUATION. The political-military situation changed significantly with the end of the Cold War and the former Warsaw Pact. Regional threats still continue to challenge peace and stability. The increase in worldwide terrorist activity also contributes to this instability. The world economic situation is highly volatile, with competition for markets and diminishing natural resources being major factors. Many nations are undergoing major internal changes and many ethnic conflicts. Traditional rivalries are re-emerging. Newly independent countries are experiencing the trauma of accepting new responsibilities in the international community. Disasters, both natural and man-made, have placed demands on the international community for assistance. Responses to regional contingencies are more frequently conducted in a multinational context, in coordination with international organizations such as the UN and its agencies.

1-3. RECENT OPERATIONS. Table 1-1, page 1-2, provides a partial list of past contingency missions which have involved the deployment of US forces. This list could be expanded by more than 100 entries by including all contingency operations in CONUS and overseas areas. Four of the most significant operations of recent years were:

- Desert Shield/Storm in SW Asia.
- Restore Hope in Somalia.
- Uphold Democracy in Haiti.
- Joint Endeavor in the Balkans.

The following is a list of a wide and growing variety of missions for military forces in the category of support or stability operations.

- Unit Visits
- Unit and Observer Exchanges
- Joint and Combined Exercises
- On-Site Inspections
- Peacekeeping
- Security Assistance
- Humanitarian Support
- Disaster Relief
- Peace Implementation
- Noncombatant Evacuation Operations
- Protection of US Citizens
- Counterterrorism
- Hostage Rescue
- Counterinsurgency
- Show of Force
- Deterrence
- Occupation
- Peace Enforcement
- Intervention
- Repel Aggression
- Major Combat

The reasons for the proliferation of support or stability operations show the shift in polarity resulting from the end of the Warsaw Pact. These types of operations were ongoing throughout the Cold War. The military is being used to respond to more of these type operations. It appears that the requirements for the types of operations that involve humanitarian, disaster relief, and peace operations are in fact increasing.

Table 1-1. Past Contingencies Involving the Deployment of US Forces

Name/Location	Dates	Type	CINC AOR
JTF-Alaska Oil Spill	4/89	Disaster Relief Environmental Cleanup	PACOM
UN TAG-Namibia	4/89 - 3/90	Treaty Supervision	EUCOM
JUST CAUSE-Panama	10/89 - 1/90	Foreign Internal Defense	SOUTHCOM
JTF-Philippines	12/89	Foreign Internal Defense-NEO	PACOM
SHARP EDGE-Liberia	5/90 - 9/90	NEO	EUCOM
DESERT SHIELD/ DESERT STORM-SWA	8/90 - 3/91	Repel Aggression	CENTCOM
JTF-PROVIDE COMFORT-Turkey	3/91 - Present	Humanitarian Relief	EUCOM
SEA ANGEL-Bangladesh	5/91 - 6/91 and 11/92	Disaster Relief	PACOM
Various-Caribbean/GTMO	10/91 - 7/93	Refugee Support	ACOM
PROVIDE HOPE-CIS	2/92	Humanitarian Assistance	CJCS
UNPROFOR-Balkans	2/92 - 12/95	Peace Supervision Humanitarian Assistance	CJCS
Sierra Leone	5/92 - 5/92	NEO	EUCOM
PROVIDE PROMISE-Balkans	7/92 - 12/95	Humanitarian Assistance	EUCOM
SOUTHERN WATCH-SWA/Iraq	8/92 - Present	Enforcement	CENTCOM
Typhoon Omar – Guam	8/92 - 9/92	Disaster Relief	PACOM
RESTORE HOPE-Somalia	12/92 - 5/93	Peace Enforcement	CENTCOM
PROVIDE REFUGEE-Marshall	1/93	Disaster Relief	PACOM
DENY FLIGHT-Balkans	4/93 - 8/95	Enforcement	EUCOM
ABLE SENTRY-Macedonian	7/93 - Present	Enforcement	EUCOM
UPHOLD DEMOCRACY-Haiti	3/95 - 4/96	Peace Supervision	ACOM
JOINT ENDEAVOR-Balkans	12/95 - Present	Peace Implementation	EUCOM

1-4. FORCE PROJECTION. The employment of military ground forces and combat power decides the outcome of campaigns and operations. The success of these forces often depends on sound, timely deployment and sustainment support. A well-defined, integrated, transportation system is important to the success of these operations. Movement control is one of the most critical components of a transportation system. It is also the linchpin for all transportation actions in a

theater of operations. Movement control contributes significantly toward the success or failure of any operation. Effective movement control of forces, units, or logistics enhances combat effectiveness. Inadequate control results in waste, reduced efficiency, and loss of potential combat power.

Current US military strategy rests on the twin concepts of forward presence and power projection to facilitate the accomplishment of military objectives in pursuit of US policy. Complementing overseas presence, power projection is the ability of the US to apply all the necessary elements of national power (military, economic, diplomatic, and informational) at the place and time necessary to achieve national security objectives. Credible power projection requires the capability to rapidly deploy sufficient military forces to terminate conflicts on terms favorable to the US and its allies. Effective and demonstrated power projection capability can deter potential adversaries, demonstrate US resolve, and if necessary, enable successful military operations anywhere in the world.

The military element of power projection is force projection (Figure 1-1, page 1-4). Force projection is the demonstrated ability to alert, mobilize, and deploy rapidly in order to operate effectively anywhere in the world. The US Army is the nation's strategic land force and the strategic core of US forces for joint or multinational operations. The Army is required to be ready for global force projection with a mix of heavy, light, and special operations forces, with appropriate levels of combat support and combat service support. The Army must be capable of executing a wide range of missions spanning the spectrum of military operations from humanitarian support to major theater wars.

Section II. Strategic Mobility

1-5. MOBILITY REQUIREMENTS STUDY BOTTOM UP REVIEW UPDATE. To make power projection and force projection a reality, the Army developed force closure timelines as part of the Mobility Requirements Study to maximize strategic transportation and materiel assets. The Army's Mobility Requirements Study specifies that the US must be able to rapidly deploy 5 1/3 divisions and its associated corps support, 8,700 nautical miles, from fort to foxhole, within a 75-day period, meeting the following timelines (see also Figure 1-2, page 1-5):

- A light or airborne brigade-size force arrives in theater by C+4, with the remainder of the division to close not later than C+12.
- An afloat heavy combat brigade closes in the theater and is ready to fight by C+15.
- By C+30, two heavy divisions sealifted from CONUS close in the theater. These divisions can be a mix of armor, mechanized, or air assault as determined by the supported CINC.
- The remaining two divisions and a corps support command arrive in the theater by C+75.

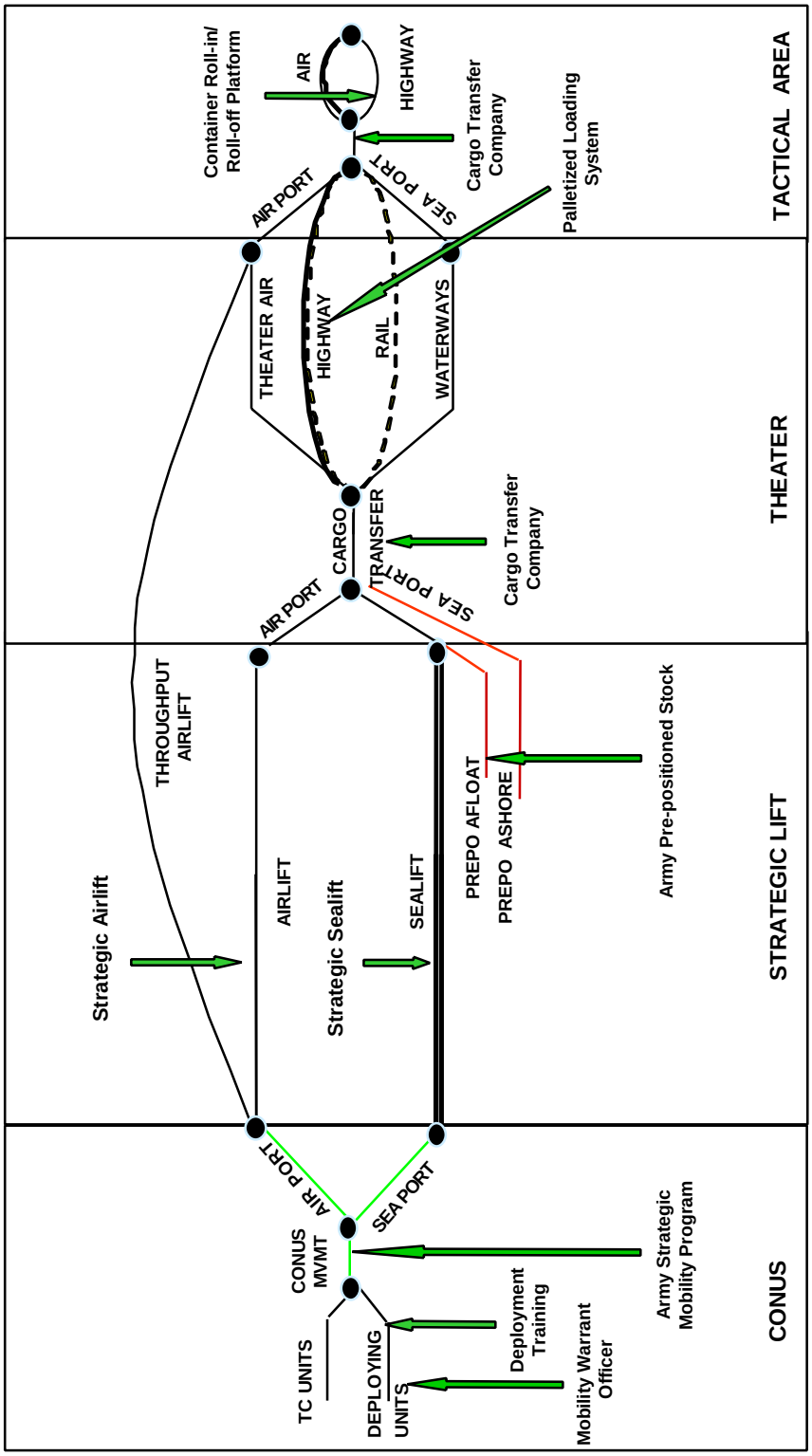
TACTICAL AREA
THEATER
STRATEGIC LIFT
CONUS
Container Roll-in/
Roll-off Platform
AIR
HIGHWAY
Cargo Transfer
Company
Palletized Loading
System
AIR PORT
SEA PORT
THEATER AIR
HIGHWAY
RAIL
WATERWAYS
CARGO
TRANSFER
Cargo Transfer
Company
AIR PORT
SEA PORT
THROUGHPUT
AIRLIFT
Strategic Airlift
AIRLIFT
Strategic Sealift
SEALIFT
PREPO AFLOAT
PREPO ASHORE
Army Pre-positioned Stock
AIR PORT
SEA PORT
CONUS
MVMT
TC UNITS
DEPLOYING
UNITS
Deployment
Training
Mobility Warrant
Officer
Army Strategic
Mobility Program

Figure 1-1. Force Projection Process

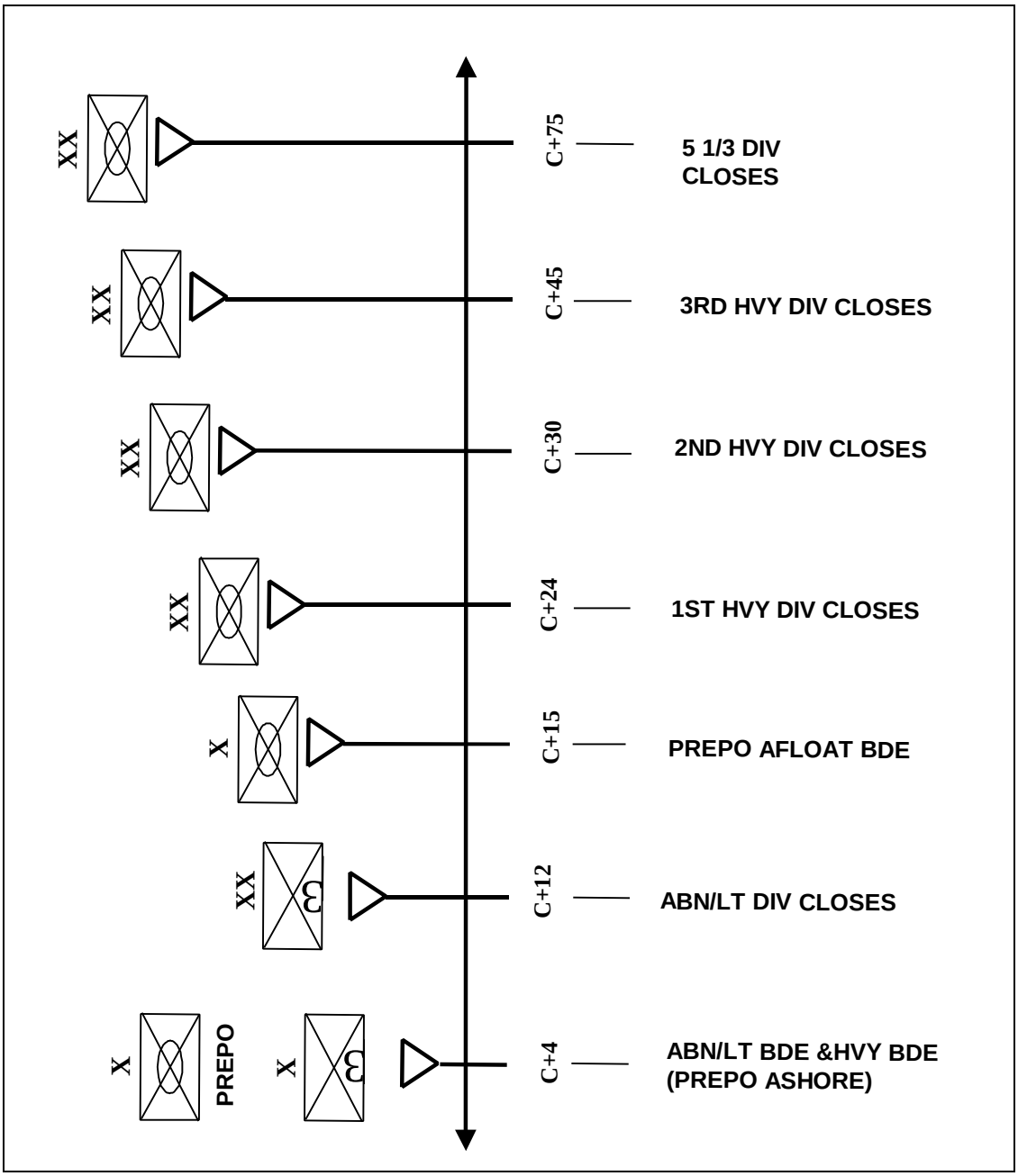

Figure 1-2. Mobility Requirements Study Required Force Closure

1-6. THE STRATEGIC MOBILITY TRIAD. Power projection is essential for accomplishing our national military objectives. It also requires the foundation of strategic mobility in order for it to be credible. Strategic mobility is the ability to rapidly deploy troops and equipment anywhere in the world to protect US interests. Strategic mobility relies on the following components known as the strategic mobility triad (see also Figure 1-3).

- APS strategically placed on land and sea.
- A substantial sealift capability to move heavy equipment and bulk sustainment supplies where needed.
- Adequate airlift to project troops and essential equipment quickly.

An infrastructure capable of transporting personnel and equipment to ports of embarkation is critical to meet a combatant commander's required timelines.

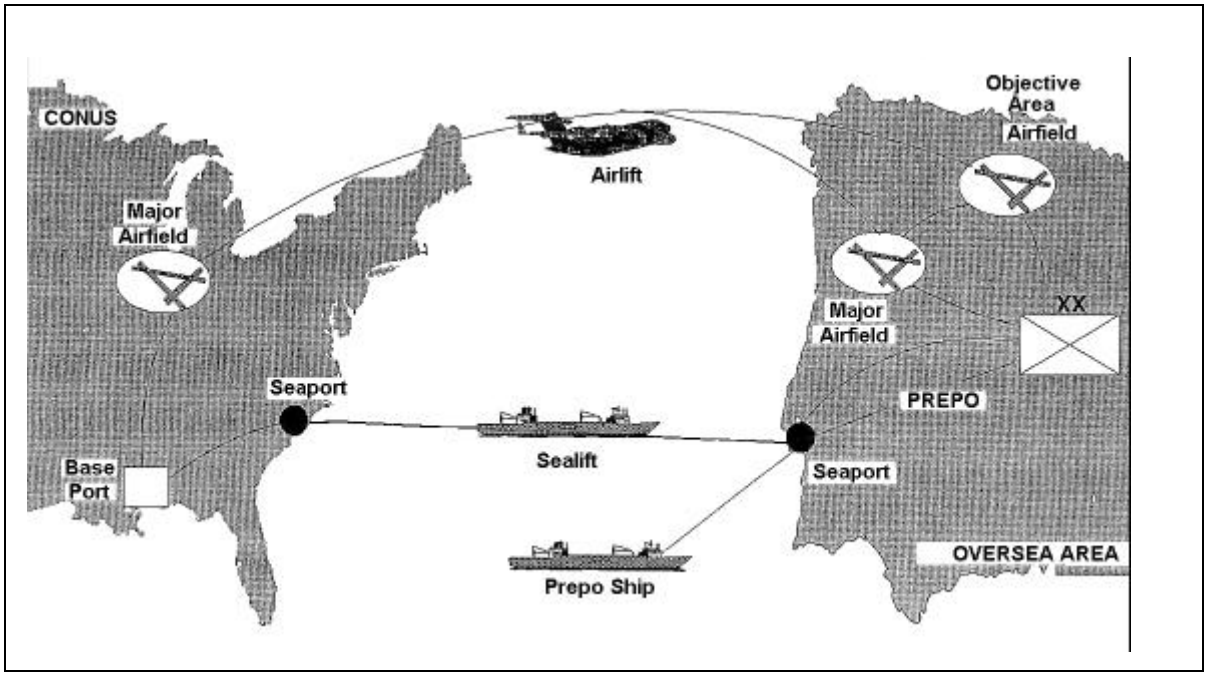

Figure 1-3. Strategic Mobility Triad

CHAPTER 2

MOVEMENT CONTROL OVERVIEW

Section I. Definition of Movement Control

2-1. INTRODUCTION. Movement control consists of the following:

- Planning.
- Validating.
- Allocating.
- Routing.
- Managing priorities.
- Coordinating.
- ITV and force tracking.

Movement control is also the commitment of apportioned transportation assets according to command planning directives. It is a continuum that involves coordinating and integrating logistics, movement information, and programs that span the strategic, operational, and tactical levels of war. Movement control is guided by a system that balances requirements against capabilities and assigns resources based on the combat commander's priorities.

2-2. ELEMENTS OF A TRANSPORTATION SYSTEM. The transportation system is comprised of three distinct elements (see Figure 2-1). These elements are mode operations (highway, rail, water, and air), terminal operations, and movement control. Of these elements, movement control is the most critical component of the system. A movement control system must coordinate the transportation modes, terminals, Services, commands, and host nations during deployment, sustainment, and redeployment.

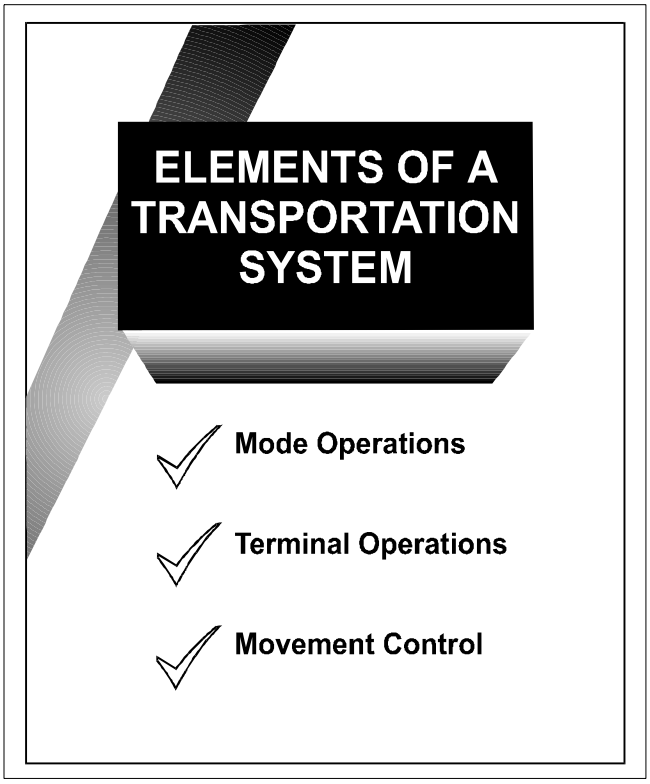

Figure 2-1. Elements of a Transportation System

The transportation system also supports patient and enemy prisoners of war evacuations, noncombatant evacuation operations, and force redeployments. Redeployments planning must address

them early in an operation.

The transportation system must be capable of moving joint forces by multiple modes. It must move forces over long distances and through many different types of terminals. It must accomplish all this while adhering to the timetable of the supported CINC.

The complexity of the transportation system requires that both the providers and users develop integrated, executable movement plans. An effective interface between the strategic and theater movement systems is crucial. The supported combatant commander and Commander-in-Chief, United States Transportation Command, along with other supporting CINCs, are responsible for establishing that interface.

Geographic combatant commanders have many options when establishing their transportation systems. They may use uni-Service, cross-Service, common-Service, or joint-Service support arrangements. Based on the type of Service support agreement, the geographic combatant commander assigns logistics responsibilities. He may use either the dominant-user or the most-capable-Service concept as explained below. Regardless of the method, it should allow the components to use the common-user system for requirements that exceed organic capabilities. When implementing a concept, the geographic combatant commander should plan for contingencies that would require a different arrangement.

a. Dominant-User Concept. The geographic combatant commander assigns to the Service component (that is the principal consumer) the responsibility for providing or coordinating logistics support to the other Service components in the theater or designated area.

b. Most-Capable-Service Concept. The geographic combatant commander assigns responsibilities to the Service component most capable of performing the mission. Usually, the most-capable-Service arrangement is the most efficient and flexible.

Section II. Movement Control Principles and Functions

2-3. PRINCIPLES OF MOVEMENT CONTROL. The six movement control principles, as shown in Figure 2-2, govern the planning and execution of movement control operations. These principles are discussed below.

a. Centralized Control and Decentralized Execution. The most efficient method to provide movement control is to centralize control of movements at the highest level. Centralization means that a focal point for transportation planning and resource allocation exists at each level of command involved in an operation. The focal point is an individual or unit that is aware of the current and future requirements of the supported force as well as the capabilities available to meet the requirements. Centralization of movement control normally occurs at the levels charged with integrating logistics support. Decentralized control of mode and terminal operations is equally important. Decentralized execution of transportation missions means terminal and mode operators remain free to assign and control the specific transportation assets that will meet the requirement. This practice enhances the flexibility to prioritize support and accomplish the mission.

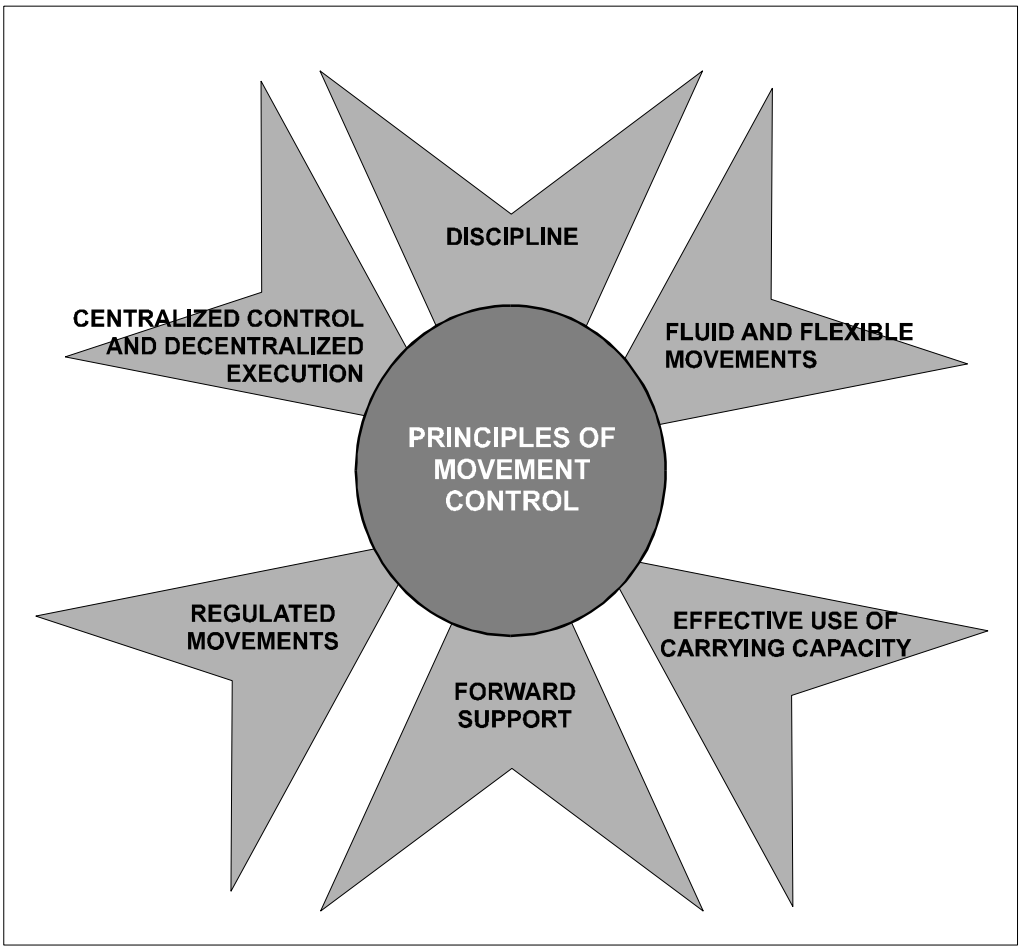

Figure 2-2. Movement Control Principles

b. Regulated Movements. Movement control authorities regulate moves to prevent terminal congestion and scheduling conflicts among Service components. Proper management of transportation assets and the transportation network is critical. Advances in technology have increased both the capability and requirement to regulate movements. Highly mobile forces, longer distances, increased consumption rates, and shared LOCs are a few of the challenges.

The regulation of movements has three applications. One deals with the apportionment of cargo carrying capacities to movement requirements. The second deals with the regulation of traffic through the LOCs, including MSRs. The third deals with force projection.

Transportation planners must determine which traffic and LOCs require control. The free flow of goods and services will work in a non-saturated environment. However, saturation of the system normally occurs because highly mobile forces extend resupply lines. Increased consumption rates and a desire to reduce stockpiles are additional causes of saturation of the transportation system. Movement controllers must therefore regulate movements and execute the commander's priorities for use. Inadequate transportation capabilities in relationship to the size of the force supported will also require prioritization.

An additional consideration is the support the Army provides to the other Services. In a joint and combined environment, regulation of transportation assets and LOCs will prevent congestion and enforce priorities. Regulation of LOC movements is critical. This is always important when US forces must share available airfields, roads, rail lines, water terminals, and inland waterways with allied forces and the HN. A clear articulation of priorities is essential. MP organizations help by providing security, reconnaissance, and traffic control.

Command priorities guide the regulation of all movements. Therefore, transportation planners, operators, and users must exercise discipline when establishing and using available transportation assets. The exercise of discipline ensures meeting the commander's priorities. A disciplined transportation system enhances the confidence users have in the system's ability to support the mission. When planning and executing movements, commanders and movement control elements must not validate, approve, or start any move if a terminal or mode in the transportation system cannot meet the requirement.

c. Fluid and Flexible Movements. Transportation systems must provide the uninterrupted movement of personnel, supplies, and services. This means the system must be capable of rerouting and diverting traffic. Maintaining flexibility is one of the biggest challenges facing transportation planners and operators in a changing battlefield with shifting conditions and priorities. To accomplish this task successfully, the transportation system must be linked to information and communications systems. These systems provide timely data to adjust the responses of the terminals and modes in the system. Automated identification technology is an essential component in providing timely data and is further discussed in Appendix A.

Transportation planners and operators can also improve response time and flexibility by using the right modes for the right cargo. They can also anticipate the need for alternate modes and routes. For example, if a functioning rail system is available, movement of heavy armor over long distances is best suited for movement over rail as opposed to highway if the tactical situation permits.

d. Effective Use of Carrying Capacity. Transportation is a limited asset. Therefore, planners must understand when to use a specific mode of transport and when to optimize the use of each mode's unique capabilities. This principle involves more than loading each transport vehicle to its maximum carrying capacity. It also means using all available transport capability in the most effective manner. While allowing for adequate equipment maintenance and personnel rest, transportation operators should keep transportation assets loaded and moving as much as the operational and tactical situation permits.

e. Discipline. The timely return of committed transportation assets from destination back into the system is an integral part of movement control. Transport vehicles and containers need fast off-loading and return to the system to increase the transport capability for later operations. Discipline is the prompt return of transportation assets that ensures their availability for subsequent operations and avoids possible demurrage, storage, and other penalty charges against the government. Similarly, transportation assets must support the retrograde of personnel and cargo operations.

f. Forward Support. Forward-oriented transportation support is a combat multiplier; it allows the commander to concentrate all of his forces on the enemy. The principle of forward support includes fast, reliable transportation to provide support as far forward as possible. The key to forward support is the reception and clearance capabilities at the destination units. These units may require equipment and personnel augmentation to enhance their reception and clearance capabilities. Forward support may entail the provisioning of operational level transportation assets to support tactical level units. However, any requirement for forward support that relinquishes centralized control for an extended time must be

balanced against the effectiveness of the overall transportation system.

2-4. THE FUNCTIONS OF MOVEMENT CONTROL. The functions of movement control consist of planning, validating, allocating, routing, managing priorities, coordinating, and ITV and force tracking. Figure 2-3 shows the process for these functions.

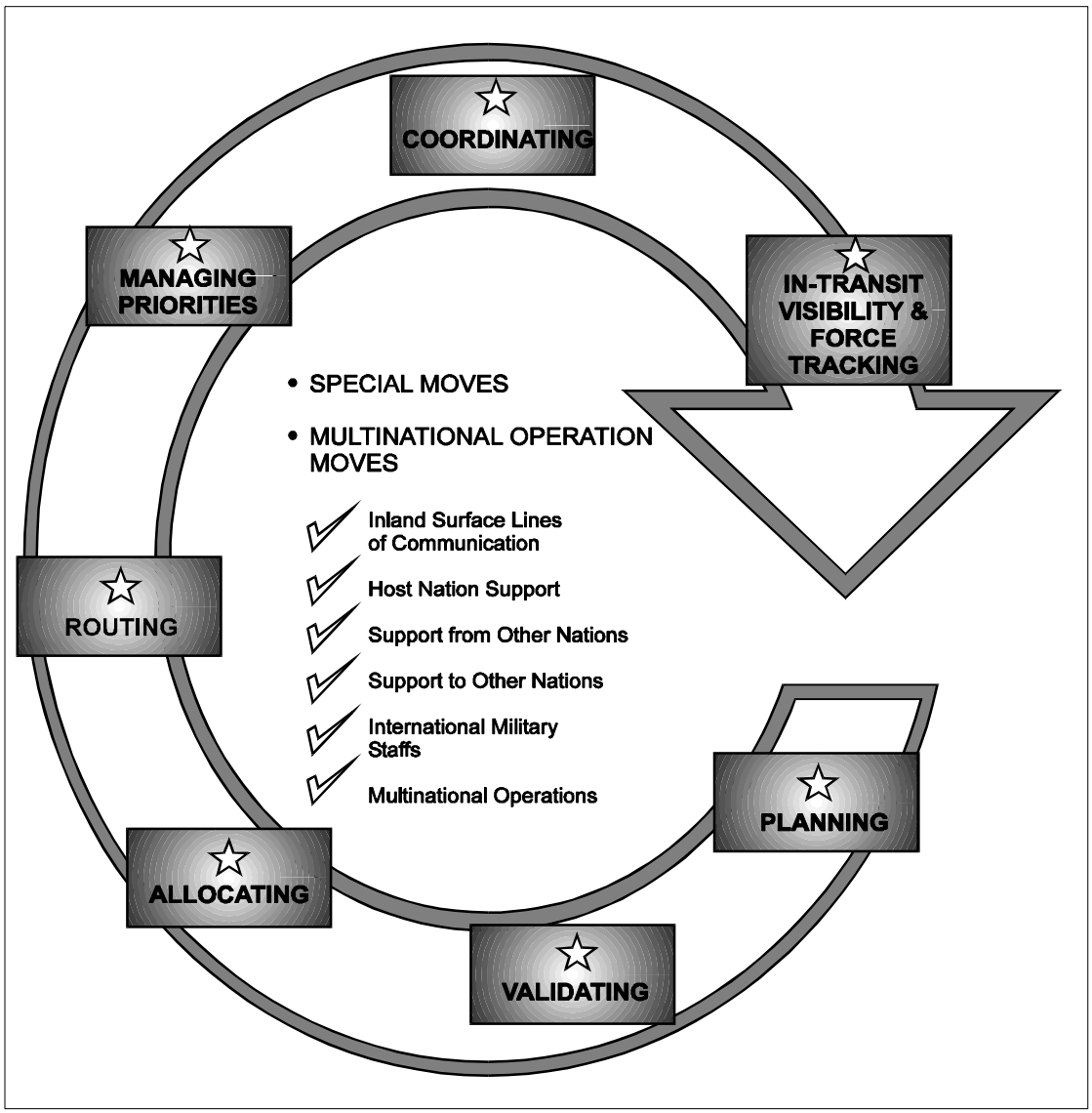

Figure 2-3. Movement Control Functions

a. Planning. Transportation planning is vital to the success of military operations at all levels of command. Staff planners serve on the coordinating or special staffs at each echelon of command. They

perform common functions integral to deploying and sustaining the force. The staff planners provide expertise in the development of operations plans and estimates during the planning process. They also advise commanders and staff on transportation matters, coordinate transportation staff actions, and evaluate the effectiveness of the transportation system. Staff planners also coordinate with other functional planners that have an impact on transportation to ensure requirements which relate to the transportation system are adequately covered. Because most facets of logistics interface with the transportation system and movement control, planners must look forward, backward, and laterally, as appropriate, to ensure plans are coordinated with supporting and supported commands.

b. Validating. Shipments presented to USCINCTRANS or a combatant command transportation controller for movement must be validated by authorities within the requesting unit's chain of command. The validation confirms the need for the movement, shipment configuration, dimensions, and routing. This validation ensures that all parties, including the chain of command, are cognizant of the requirement.

c. Allocating. Allocating assigns specific transportation resources against planned movement requirements. It involves dividing the common-user transportation capability among the transportation tasks according to priorities. It is a critical function in decision making because it forces planners to analyze all transportation tasks and in the broad sense, divide the transportation capabilities among those tasks. At the strategic level, the CJCS apportions strategic lift assets during the OPLAN development. Theater level apportionment supports the combatant commander concept of operations. They are usually expressed in percentages and developed in planning cycles. After receiving its share from the supported combatant commander, the ASCC apportions and distributes resources to the Army force. If the Army provides support to other Services, then its apportionment of common-user lift must reflect that mission.

d. Routing. Routing is the process of coordinating or directing movements on MSRs or ASRs. When routing traffic, movement planners should consider the fundamentals and principles which govern routing. The fundamentals are balance, separation, and distribution.

(1) Balance. This process matches vehicle characteristics with route characteristics. Balance ensures that traffic never routinely exceeds the most limiting feature of a route. It considers the military load classification of the vehicles, bridges, and the route. Balancing also identifies requirements for upgrading routes or ordering caution crossings for certain bridges. Planners should use TB 55-46-1 to obtain vehicle characteristics. Route characteristics are obtained during the planning process.

(2) Separation. This process allocates road space for movements to ensure that movements do not conflict. The goal of separation is to prevent congestion on regulated routes. Planners must not allocate road space or time blocks to more than one movement requirement.

(3) Distribution. This process allocates as many routes as possible to reduce the potential for congestion and prevent deterioration of road surfaces. Distribution also promotes passive defense by distributing and separating traffic.

The principles that govern routing are as follows:

- Assign highest priority traffic to routes that provide the minimum time-distance.
- Consider the sustained capabilities of roads and bridges when assigning movements.

- Separate motor movements from pedestrian movements.
- Separate civilian traffic (vehicular or pedestrian) from military movements.
- Consider consolidating shipments that can be applied to a selected route.

e. Managing Priorities. Movement personnel manage requirements and priorities when there are not enough assets to satisfy all transportation requests. They also regulate movement on LOCs to prevent conflict and congestion. This is called highway regulation for movement on roads. Movement control units require automated support to receive transportation requests and movement bids, process them, and communicate schedules and itineraries to the requestor. The TSC is the ultimate manager for the theater.

f. Coordinating. Movement managers are the customers POC for transportation support and their point of entrance to the transportation system. They concentrate their efforts on those functions of movement control, which directly relate to providing continuous transportation support. Their efforts are central and integral to effective transportation support by all modes. Coordinating is where movement control units interface with units and shippers to provide transportation support. During this process, they match requirements with modes based on priorities and consider the principles of movement and mode selection criteria. Movement control units then commit or task mode and terminal operators to provide support. Coordination extends to allied forces, HNs, and non-governmental agencies within their AOR. Reliable communications enhances response time and are crucial to this process. A standard transportation request process and validation system are inherent to coordination.

g. In-transit Visibility. ITV is a process used to continually update the location of units, equipment, personnel, and supplies as they travel within the transportation system. It enables movement control units to answer the commander's information needs, divert shipments based on changes of priority or destination, and coordinate and manage movements. ITV is enhanced with the evolving AIT (discussed in Appendix A) which uses sophisticated means of identification like radio frequency identification. It is required for all levels of war and stability or support operations. The United States Transportation Command uses GTN and JOPES for strategic movements. Theater systems must provide similar capabilities and link with strategic systems. Assured communications are essential.

h. Force Tracking. Force tracking provides situational awareness of combat-ready units within the AOR. This process actually begins in the staging area, where equipment and personnel are reassembled into combat-ready units. Staging operations must have the communications, data processing equipment, and personnel assets to provide and manage force tracking data. Efficient movement control is one means of force tracking. Movement control must be able to communicate directly with operational commanders. Alternatively, movement control can be maintained using the established chain of command. Presently, there are a number of joint and multinational systems in various stages of development that provide visibility of force deployment and sustainment. Unfortunately, present systems do not completely satisfy the requirements of force tracking for planning and executing deployments.

2-5. OTHER CONSIDERATIONS. In addition to the basic principles of movement control, there are several other considerations that are involved. The below considerations have a direct bearing on how movement control is performed.

a. Peace to War. To the maximum extent possible, commanders assign transportation responsibilities, establish procedures, and train using the same organizations throughout the range of

military operations. From a movement control perspective, the initiation of a military operation should only represent an increase in intensity, not a shift to new procedures and systems.

Implementing this consideration is not simple. For example, the force projection Army requires that CONUS-based and forward presence transportation organizations become involved concurrently in the strategic deployment of its organic elements and the planning of the transportation system needed to support the operations. An important factor is identifying and sequencing transportation elements during the deployment. This is crucial to the success of the operation. Movement control elements must arrive in the AO at the right time and with the right equipment to get the transportation system functional.

Movement control elements should be among the early modules deployed in the theater force opening package. Early deployment allows for the timely establishment of a transportation system with the capability to receive and program the onward movement of the deploying force and manage its growth.

b. Origin to Destination. The goal of the Army transportation system is the movement of passengers and cargo from origin to destination. This goal can be achieved efficiently when cargo and personnel proceed with minimum disruptions while in-transit. This concept of operations is called throughput. In addition to throughput, Army transportation organizations consider the intermodal capabilities available. Intermodality, the use of multiple modes for the same shipment, facilitates the handling of cargo while in-transit. To the maximum extent possible, Army transportation planners strive to move cargo and personnel from origin to destination using throughput and intermodality as key considerations.

c. Stability or Support Operations. The primary effort of many stability or support operations is logistics, and as such, transportation. Considerations include operating with the UN to support coalition forces and allies. Other considerations include working with personnel from non-governmental agencies and private organizations and developing HN capability to provide support.

Movement control functions during stability and support operations are not materially different from those used during conflicts. Basic tasks and missions remain the same. However, these missions and tasks take place under the direction of the JFC. The JFC establishes a CMOC to coordinate activities outside the military requirement of the operation. The planning process at all command levels must involve transportation planners to determine the extent of transportation and movement requirements. Following the analysis, transportation planners can recommend the force structure needed to support the particular operation.

d. Geographic Location. Principles of movement control are applicable regardless of the geographical location of the theater of operation. Each theater is confronted with its own unique set of challenges, because of varied world geography, when planning and establishing a transportation system and its associated movement control program. Appendix B provides guidance for transportation and movement control managers when planning for a specific geographic area.

CHAPTER 3

STRATEGIC MOVEMENT CONTROL

3-1. INTRODUCTION. This chapter describes strategic level movement control organizations. Movement control at the strategic level of war is primarily the responsibility of the DOD. JP 4-01.3 and FM 100-17 outlines the procedures for conducting movement control in support of joint operations.

3-2. US TRANSPORTATION COMMAND. USTRANSCOM is the single transportation manager for the DOD. It is responsible for providing global transport in support of national security objectives. It also uses the GTN and JOPES to manage the movement of cargo and passengers through the DTS. Three transportation component commands are subordinate to USTRANSCOM. These TCCs are:

- *Military Sealift Command.* Responsible for providing all strategic sealift movements.
- *Military Traffic Management Command.* Manages the surface transport of defense materiel and the CONUS air and surface transport of passengers.
- *Air Mobility Command.* Responsible for providing all strategic air movements.

USTRANSCOM coordinates the efforts of these commands with the supported and supporting combatant commanders (see Figure 3-1, page 3-2).

a. Military Sealift Command. MSC provides sealift for the support of strategic deployment and sustainment operations, mobilization, deployment, and emergency plans. MSC acquires organic assets from funding provided by the Department of the Navy. MSC may be augmented from the US-flag charter assets from the Ready Reserve Force, the National Defense Reserve Fleet, and through charter agreements from US and foreign flag commercial carriers.
JP 4-01.2 contains more detailed information.

b. Military Traffic Management Command. MTMC manages the surface transport of defense materiel and the CONUS air and surface transport of passengers. Transport is from the point of origin to the SPOE or APOE. MTMC does the following:

- Coordinates all activities with the supported combatant commander.
- Recommends SPOEs, establishes cargo booking procedures, and manages the movement of cargo onto common-user ships.
- Operates common-user CONUS ocean terminals and some SPODs in theater.
- Operates ports during contingencies (on order) if contracts or HNS provides the labor needed to load and unload the ships.
- Works with the combatant commander to create water terminal operations force packages to operate SPODs where insufficient infrastructure or unreliable stevedore labor would prevent the use of HNS. JP 4-01.5 contains more detailed information.

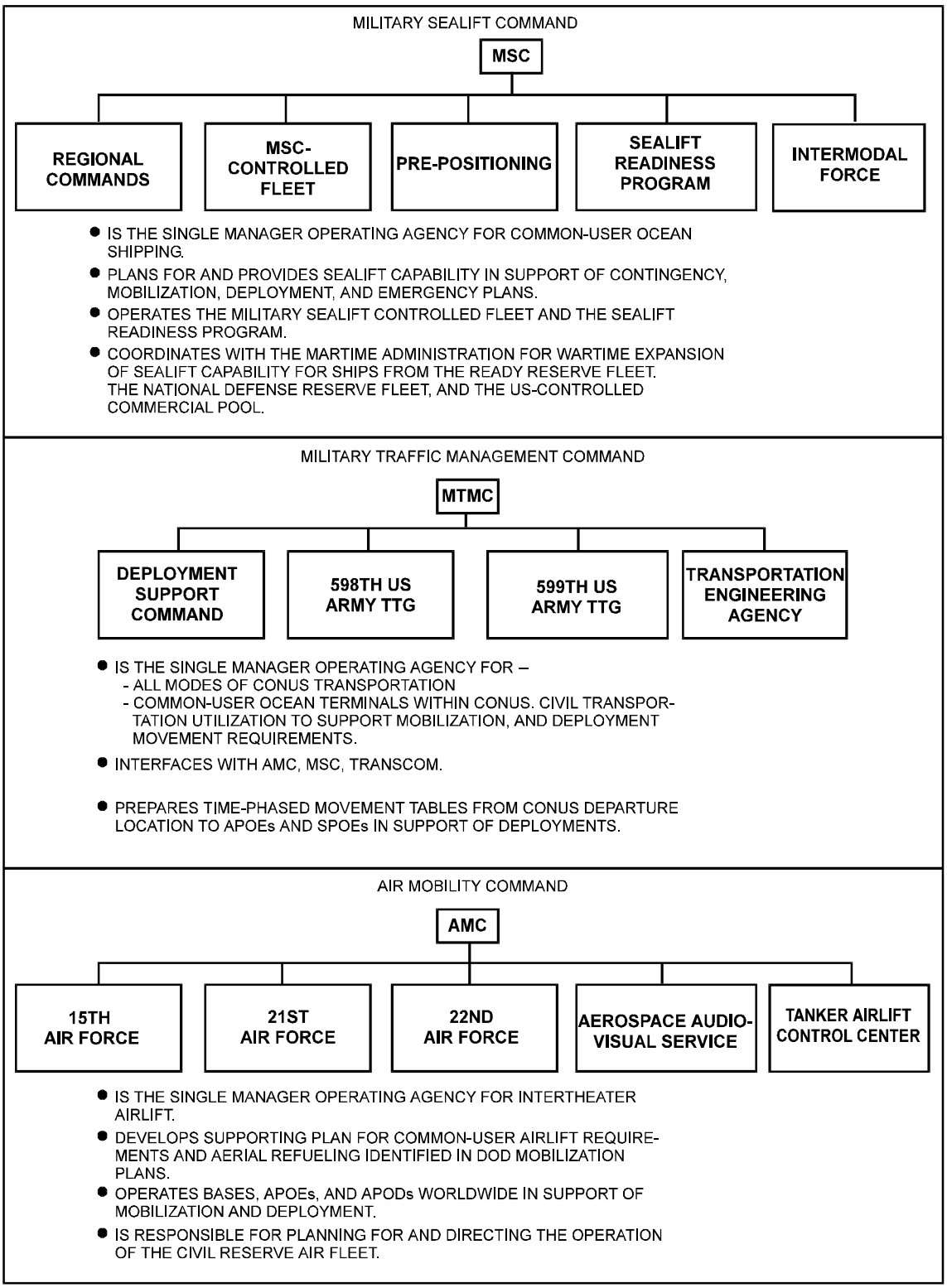

Figure 3-1. USTRANSCOM Component Commands

USTRANSCOM, through the MTMC, is the DOD-designated SPM for all worldwide common-user seaports. The SPM performs those functions necessary to support the strategic flow of the deploying force's equipment and sustainment supply in the SPOE and transitions them to the theater CINC in the SPOD. The SPM is responsible for providing strategic deployment status information to the CINC and to workload the SPOD port operator based on the CINC's priorities and guidance. The SPM is also responsible through all phases of the theater port operational continuum. The theater port operational continuum can be from a bare beach deployment (LOTS operation) to a totally commercial contract supported deployment.

c. Air Mobility Command. AMC provides the airlift for strategic deployment and sustainment operations and for common-user missions such as aeromedical evacuation. AMC is also responsible for operating some CONUS and OCONUS military aerial ports. When strategic deployment occurs, Air Force organic airlift assets may be augmented by assets from US commercial carriers either through contracts or activation of the CRAF. At the earliest practical point during large-scale sustainment operations, USTRANSCOM, the combatant commander, and AMC may consider establishing an air express service to link the established CONUS commercial air transportation infrastructure with the overseas theater. JP 4-01.1 contains more detailed information.

3-3. COMMAND RESPONSIBILITIES. Supporting combatant commanders and the Services provide forces to the supported combatant commanders and are responsible for ensuring their arrival at the POE according to port call messages. This entails predeployment activities and the movement of active units from their installations and/or the movement of Reserve Component units from their home stations to mobilization stations or POEs for preparation and training before deployment. As the major supporting command that provides Army forces, FORSCOM has established procedures and systems to discharge this responsibility. These include the Forces Command Mobilization and Deployment Planning System and FORSCOM Regulations 55-1 and 55-2. General responsibilities are as follows:

- Redistribute personnel and equipment.
- Coordinate requirements with USTRANSCOM.
- Coordinate TPFDD changes with the geographic combatant commander.
- Direct deployment schedule changes to mobilization stations.
- Relinquish command of deploying units, on order, to the gaining commander.

Depending on the level of mobilization, the numbered armies in CONUS and state area commands play a key role in military convoy movements in CONUS.

a. Continental United States Army. Continental United States Armies may become joint regional defense commands. This usually occurs upon order for full mobilization but may occur to selectively improve command and control for less-than-full mobilization. When this happens, the JRDC's movement control responsibilities include monitoring military movements, providing liaison with POEs and installations, and providing liaison with FEMA regional offices. The JRDC will also prioritize and allocate movement related resources to include road space and marshaling areas.

b. State Area Command. STARCs may become joint state area commands. Defense movement coordinators in the state movement control centers manage military highway movements. They assign road space for units based on port calls, monitor all DOD military movements, and coordinate with federal and state civil agencies for the units mobilization and deployment needs.

c. Military Installations. Military installations play a key role in movement control. When serving as mobilization stations, coordinating installations, or supporting installations, military installations perform the following:

- Prepare units for deployment.
- Guide and assist assigned and supported units in preparing, maintaining, and executing unit move plans and related documentation. The ITO at installations process unit data, convoy clearances, and permits. They are also responsible for procuring transportation for movement to the POE.
- Provide an A/DACG to the APOE and a PSA to the SPOE.
- Provide selected logistics support to the POEs or en route deploying units as outlined in coordinated plans, SOPs, or regulations.
- Control units until deployed from POE.
- Provide marshaling and convoy holding areas.
- Serve as POC for updating unit movement data through AUEL refinement.

d. Federal and State Agencies. Federal and state agencies also play an important role in movement control. When directed by the President of the United States, FEMA coordinates and settles issues involving priorities and allocation of non-industrial facilities according to DOD Directive 3005.7 and AR 500-10. FEMA, as one of its many responsibilities, maintains a national system for emergency coordination of transportation activities to include resource mobilization policy guidance and procedures. State DOTs or equivalent agencies for public highways, toll roads, bridges, and tunnels administer traffic regulations for their states and agencies.

3-4. TRANSPORTATION AND LOGISTICS IN A JOINT FORCE. US policy states that the Services, however employed, will provide their own logistics support. However, the combatant commander exercises directive authority over logistics operations within his AOR. This authority is given to the combatant commander so he could do the following:

- Ensure the effective execution of OPLANs.
- Provide effectiveness and economy in operations.
- Prevent or eliminate unnecessary duplication of facilities and overlapping of functions among the components.

Combatant commanders have many options when establishing their transportation systems. They may use uni-Service, cross-Servicing, common-Servicing, or joint-Servicing support arrangements. Based on the type of Service support agreement, the combatant commander assigns logistics responsibilities. They may use either the dominant-user or the most-capable-Service concept (see Chapter 2).

The combatant command movement plan is key to a sound movement control system. The plan

will integrate the transportation capabilities of the component commands and produce a movement control system with centralized planning and decentralized execution. Figure 3-2 depicts the structure of the transportation movement control organizations in a joint/unified command. The following paragraphs describe the transportation and movement control capabilities of each joint force component.

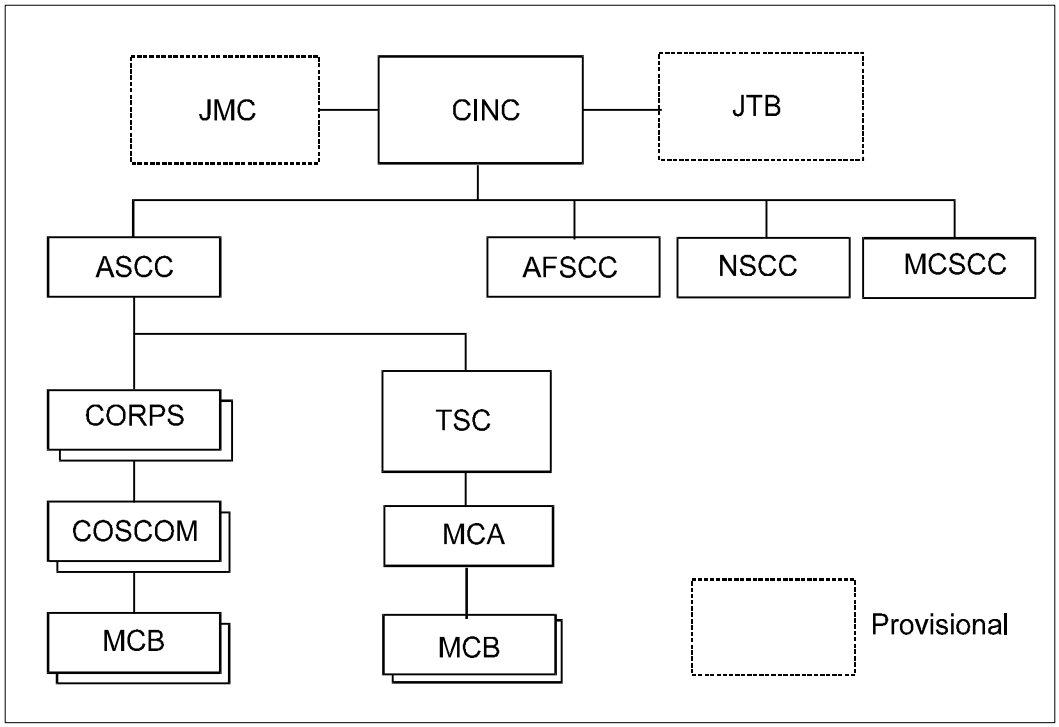

Figure 3-2. Transportation Movement Control Organizations in a Joint/Unified Command

a. Army Component. The Army provides common-user land and inland waterway transportation. They also furnish water terminal operations and when necessary, LOTS operations. They provide common-user land transportation through the TSC, MCA, Corps MCB, and the DTO.

b. Air Force Component. The Air Force component provides theater common-user airlift. The combatant commander exercises command authority over all theater-assigned airlift forces through the AFCC, who exercises OPCON through the component airlift staff. USCINCTRANS exercises command authority of assigned airlift forces. The commander, AMC, exercises OPCON of USTRANSCOM assigned airlift assets through the air mobility element of the TACC.

c. Navy Component. The Navy, through MSC, provides common-user sealift to the theater. The Navy component, in cooperation with Army units, can provide the combatant commander with over-

the-shore discharge and transfer capabilities, where port facilities are not available or inadequate. Navy cargo handling battalions and Navy cargo handling and port groups are Navy component organizations that conduct limited common-user port operations. The Navy component performs its movement control operations through the Navy component command, naval advanced logistics support site, naval forward logistics site, or a designated representative. The ALSS and FLS provide logistics support, to include movement management, to theater naval forces during major contingency and wartime periods. They coordinate Navy land transportation requirements with Army movement control organizations or the JMC.

d. Marine Corps Component. The Marine Corps has a SMO and an embarkation officer organic to their MAGTAF staffs. The SMO can coordinate Marine Corps movement requirements with the combatant commander, the JMC, and USTRANSCOM. The Marine Corps activates a FMCC within theater to coordinate and provide transportation services to all land-based elements of the MAGTAF. As the Marine Corps primary MCA within theater, the FMCC establishes liaison and communications with the JMC and forwards all transportation shortfalls to the JMC.

e. Special Operations Forces Component System. The special operations logistics officer on the staff of the special operations forces commander, normally directs the coordination of common-user lift requirements. The SOJ4 establishes a system to validate common-user lift requests from SOF units. The nature of the system depends on the composition and mission of the assigned force. The SOJ4 also establishes communication links with the JMC and the JAOC. The special operations liaison element is normally located at the JOAC and assists in coordinating SOF requirements.

3-5. THEATER JOINT MOVEMENT CONTROL ORGANIZATIONS. The theater commander may decide to form a JMC or a JTB. These are described below.

a. Joint Movement Center. If a JMC is established by the combatant commander, it coordinates the employment of all means of theater transportation (including that provided by allies or HNs) to support the concept of operations. The JMC will also be the single coordinator of strategic movements for the combatant commander with USTRANSCOM.

The JMC oversees the execution of theater transportation priorities. It is also responsible for planning movement operations and for monitoring the overall performance of the theater transportation system. When there is no theater JTB, the JMC is the primary advisor to the combatant commander in the transportation apportionment process. The JMC identifies the difference between forecasted requirements and current capabilities of all modes to assist in the planning process. It also expedites action and coordination for immediate movement requirements to ensure effective and efficient use of transportation resources.

The JMC is organized along functional lines and is designed with a peacetime nucleus that can expand in proportion to the size of the joint forces and the desires of the combatant commander. A fully developed JMC will have an administrative section and two divisions such as plans and programs and operations. The combatant commander will first use his own staff and Service component staff personnel

resources for the nucleus of the JMC. When expanding a JMC, the combatant commander will consider the structure of his dominant force and component-unique movement control requirements. The combatant commander may also draw on reserve personnel to augment the JMC. The JMC's major responsibilities include the following:

- Forecasting long-term movement requirements.
- Planning common-user theater transportation by land, sea, and air (excluding bulk liquid fuel that moves by pipeline).
- Apportioning common-user transportation capability availability within the command among the projected transportation tasks. JMCs allocate apportioned common-user transportation to the components.
- Receiving and acting on airlift requests received from authorized component validators. Validates with AMC for intratheater air and USTRANSCOM for intertheater airlift.
- Monitoring sea deployment of forces and recommending changes to movement requirements and priorities in JOPES. Coordinates with the appropriate port commander for all seaport operations, reviews and validates sea channels, and monitors container control activities of all joint force components.
- Managing transportation requirements that cannot be met at lower levels in the movement control system.

b. Joint Transportation Board. The combatant commander may establish a theater JTB to review and manage policies, priorities, and transportation apportionments, beyond the authority of a JMC. The JTB consists of representatives from the Service components, movement control agencies, and the combatant command J3 (Operations), J4 (Logistics), and J5 (Plans and Policy). The combatant commander determines who should chair the theater JTB (normally the J4). The JTB is not a day-to-day activity. The JTB's major responsibilities include the following:

- Recommends priorities.
- Recommends allocation of assets.
- Reviews priorities and policies.
- Resolves conflicts between service component commands.

CHAPTER 4

OPERATIONAL MOVEMENT CONTROL AT ECHELONS ABOVE CORPS

Section I. COMMZ Logistics Structure

4-1. INTRODUCTION. Movement control at the operational level links the strategic and tactical levels of war movement control organizations. This chapter describes movement control functions performed by the TSC staff, Transportation Directorate, DMC, MCA, MCB, and MCTs.

4-2. EAC OVERVIEW. At theater level, centralized movement control accomplishes the phases of strategic deployment: reception, staging, onward movement, and integration. It is vital for sustaining the combat zone, supporting any joint service requirements assigned by the ASCC. The ASCC headquarters provides command and staff supervision of assigned units for execution of the ASCC commander's responsibilities (see JP 3-0 and FM 100-7). The ASCC will call for deployment of a TSC or elements of a TSC to open LOCs into the theater of operations. LOC components include facilities required to move, maintain, and sustain Army forces. LOC components consist of the following:

- Aerial ports of embarkation and debarkation.
- Sea ports of embarkation and debarkation.
- Water, rail, and highway networks.
- HN resources.

In cases where a TSC is forward deployed, augmentation of existing capability by Reserve Component or Logistics Civil Augmentation Program elements are called forward to fill requirements.

Movement control organizations perform a vital role in establishing and supporting the theater distribution system. A detailed description of the transportation request process is in Appendix C. The theater distribution system provides the ASCC the ability to command and control the reception, distribution, and retrograde of all logistics sustainment while maintaining TAV through communication and information systems. The ASCC normally establishes a TSC in the COMMZ to manage the theater level logistics effort and provide C2 to the theater level distribution system.

4-3. THEATER SUPPORT COMMAND. The TSC is the senior Army logistics organization in a theater of operations (Figure 4-1, page 4-2). The TSC reports to the ASCC and operates at the operational level of logistics, while serving as the interface with both the strategic and tactical levels. When directed, it can serve as the TSC for the JTF commander.

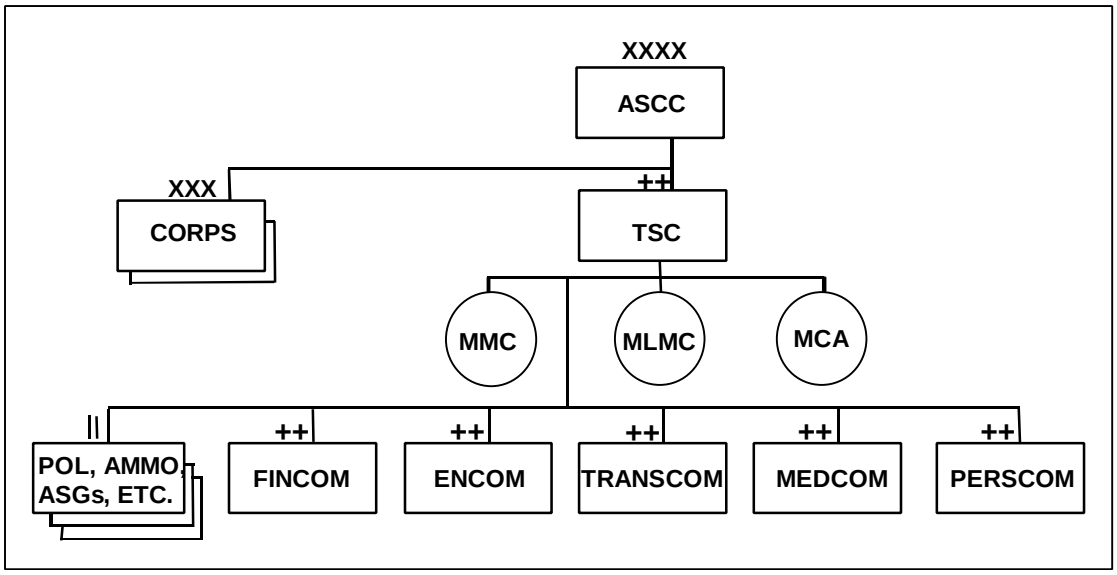

Figure 4-1. TSC C2 Full Deployment

a. Mission. The TSC is an operational level, multifunctional organization that centralizes COMMZ command, control, and supervision of support functions. The MMC, MLMC, and MCA are assigned to the TSC. It provides operational level support to the theater and tactical level support on an area basis to units operating within and passing through the COMMZ. This support includes the following:

- Movement control.
- Materiel management.
- Supply.
- Contracting.
- Property disposal.
- Maintenance.
- Transportation.
- Field services.
- Health services.
- Civil military affairs.
- Finance.
- Postal.
- Personnel management.

The TSC manages support missions through a flexible combination of area-oriented and functional commands. The TSC staff sets broad plans and policies to guide subordinate commands, controls and allocates critical materiel, and assigns missions to subordinate commands.

Depending on METT-TC, the TSC and its supporting organizations are of modular design capable of deploying in whole or in selected parts. Modular designs provide the supported CINC with the capability of more logically building the ASCC's operational level support C2 structure. For limited operations, support will be supplied through TSC EEM. In a larger more mature operation, the complete TSC as depicted in Figure 4-2 may deploy. More detailed information on the TSC can be found in FM 63-4.

b. TSC Early Entry Module. The TSC EEM is battle-rostered from the TSC general and support operations staff section. Normally, elements from the materiel and movements management

activities will be deployed along with the EEM. It will also include elements from the functional modules provided by the supporting TRANSCOM, PERSCOM, and FINCOM. The TRANSCOM functional module will either deploy with or fall in on the TSC. It will function as the Transportation Directorate of the TSC until the TRANSCOM deploys. This module is intended to provide an early entry C2 capability which will allow the ASCC to begin to build his structure at the same time he begins to build combat power. If a corps or smaller element is designated as the major Army headquarters, the TSC EEM will provide the expertise required to manage the traditional EAC units that are always required in a developing theater.

Initially, the TSC EEM could be under the C2 of the deploying ASCC corps or other early deploying headquarters. If the theater continues to develop, the separation of COMMZ functions would be facilitated by having employed the EEM. It would also provide the combatant commander with an active component long-range logistics planning capability in situations when forward stationing of the entire TSC is not prudent. When the remainder of the TSC deploys, the members of the EEM revert to their normal command and staff functions.

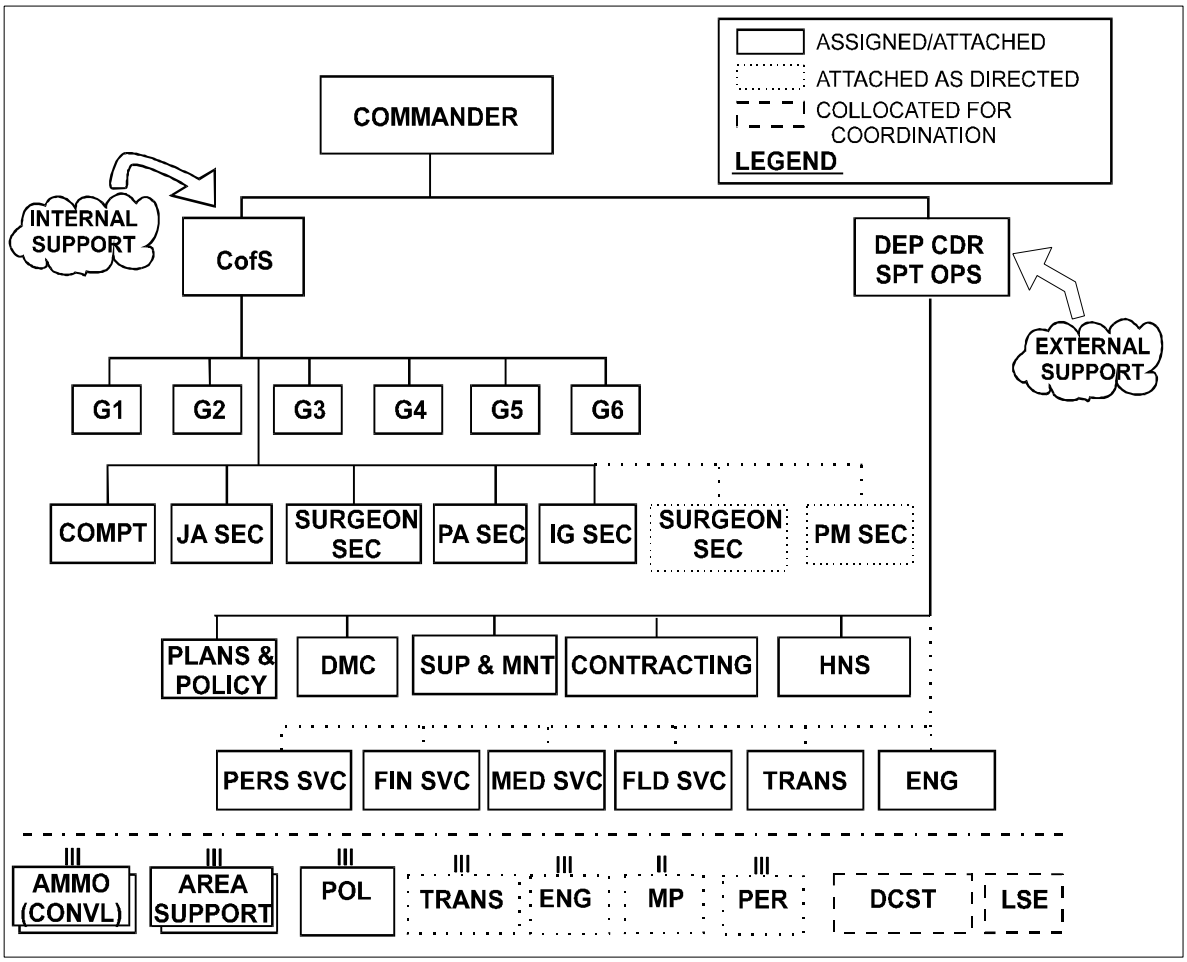

Figure 4-2. TSC Organization

c. Staff Functions. Staff functions at the TSC headquarters include the following:

(1) Command section. The command section provides battle command for TSC organizations and supervision of organic and attached units. The command group supervises and controls logistics and support operations as well as advises the ASCC and staff on pertinent logistics and support issues. The deputy commander for support operations is responsible for all external support to the deployed forces. The CofS has oversight of the general and special staffs focusing on support to units assigned and attached to the TSC.

(2) General staff. The general staff of the TSC headquarters is a coordinating staff. On technical matters, the general staff has direct liaison with staff counterparts of the subordinate commands. In some cases, the commanders of certain functional commands serve concurrently as TSC headquarters staff officers. When this occurs, TSC staff personnel are provided by their respected functional commands or by augmentation.

(3) Support operations section. The TSC consolidates all transportation functions under the support operations section. The TSC deputy commander for support operations serves as the TSC support operations officer. In this capacity, he becomes the theater distribution manager. Transportation functions within the support operations section are located in the DMC and the Transportation Directorate. The DMC provides single point management for distribution in the theater through the exercise of tasking authority and staff supervision to the TSC MMC, MCA, and MLMC. The MCA serves as the principal agent to the TSC deputy commander for support operations for planning and controlling theater movement operations (see Figure 4-3).

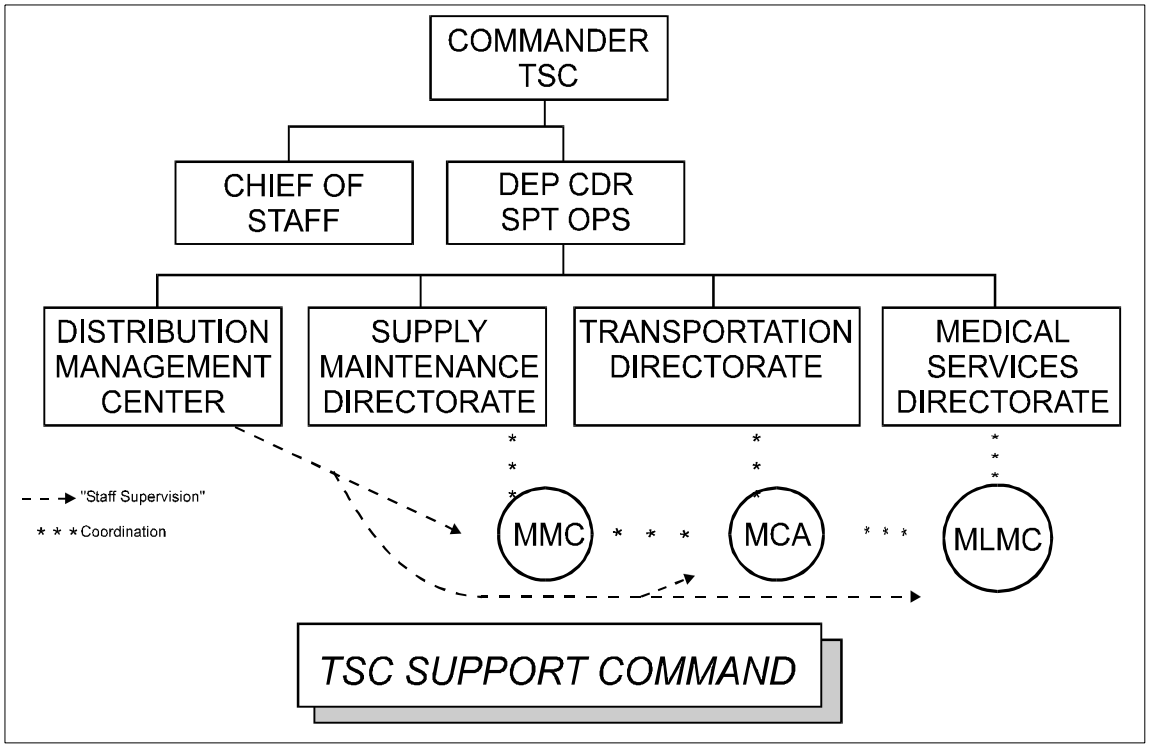

Figure 4-3. TSC Management Centers

4-4. TRANSPORTATION DIRECTORATE. The Transportation Directorate is a major functional directorate of the TSC support operations section. Personnel to staff the Transportation Directorate are provided to the TSC from the TRANSCOM in the form of a functional module identifiable by a derivative UIC or SRC. The Transportation Directorate is responsible for developing plans, policies, procedures, and programs for transportation requirements, use of Army transportation, and terminal transfer operations. It prepares estimates, plans, and policies for mode and terminal operations. It advises the deputy commander for support operations on the effective use and operation of transportation units and services. The Transportation Directorate coordinates directly with the MCA and provides transportation policy as input to the Plans and Policies Office. It also provides staff and technical supervision for subordinate transportation units until the TRANSCOM deploys to the theater.

In addition to the Office of the Director, this directorate consists of separate operating sections that are functionally organized to plan for all modes of theater transportation operations. These sections support the Army and provide common logistics support to joint or combined commands. These sections consist of plans, highway, air, rail, and marine/terminal.

4-5. DISTRIBUTION MANAGEMENT CENTER. The DMC acts as the single distribution management support element for the TSC's deputy commander for support operations. The DMC coordinates the efforts of the MCA as well as the MMC and MLMC. The relationship between the DMC staff and these respective control centers is the key to timely information management. They provide the TSC commander a cohesive picture of the distribution system.

Distribution managers operate in an information and time-sensitive environment. The DMC must maintain knowledge of the status of all facets of the theater distribution network. As the focal point for distribution within the support operations section, the DMC receives information and reports from a variety of sources. The DMC matches operational requirements with information regarding distribution operations and relays priorities to the various organizations throughout the system.

The DMC is designed to fully coordinate distribution requirements and execute the commander's priorities for distribution. As the senior distribution element the DMC performs the following:

- Establishes, validates, maintains, and updates the theater distribution plan. This is the single most important aspect of maximizing throughput operations and maintaining distribution velocity. The DMC must maintain visibility of customers, support relationships, and resources. This customer and support data form the baseline for the preparation of the theater distribution plan. This information also allows the DMC to determine where and to whom routing and diversion information for in-transit cargo should be forwarded or directed.
- Maintains customer locations using command and control systems and from location information collected through the RF tag and tracker networks.
- Maintains information regarding support relationships to allow the DMC to make recommendations to distribution activities to hold, divert, or redirect material.

The TSC DMC consists of the Office of the Chief, DMC; the distribution plans branch; and the distribution operations branch. It also receives augmentation from the TSC Personnel Command, TRANSCOM, Medical Command, and Engineer Command, as appropriate. Additional augmentation may include the liaison elements from the Army Materiel Command LSE and the Defense Logistics Agency Contingency Support Team. These relationships are shown in Figure 4-4.

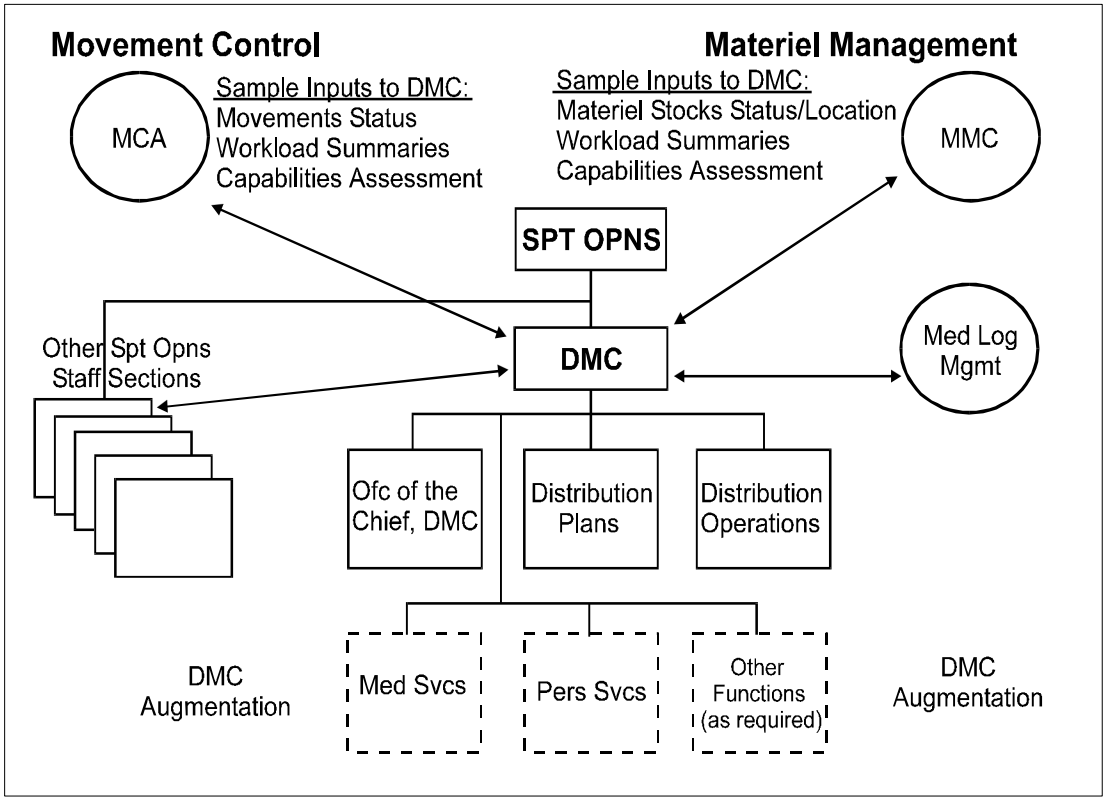

Figure 4-4. Distribution Management Center Staff Functions and Relationships

a. Chief, Distribution Management Center. The Chief, DMC is responsible for distribution within his AOR. The Chief, DMC serves as the TSC commander's focal point for distribution information. The deputy commander for support operations performs operational staff supervision over materiel management and movement control centers through the Chief, DMC.

b. Distribution Plans Branch. This branch of the TSC DMC forecasts the theater distribution "picture" in the future. This branch assimilates end-to-end information from the distribution pipeline to create a coordinated picture of the flow of units, personnel, and material into and throughout the theater of operations. This branch works closely with the TSC Plans and Policy Directorate as well as with the planning activities of the materiel and movement management organizations to ensure adequate plans and orders. This branch also works with the TSC G3 and the TSC PPD to develop plans, orders, and positioning of units and facilities.

c. Distribution Operations Branch. This branch works closely with, and coordinates the operations of, the materiel and movement organizations at EAC. This branch provides staff supervision and direct feedback to the rest of the TSC support operations section concerning the performance of the distribution network. This branch is the focal point for distribution related information. Steady information flow from the control centers, functional directorates, and from TAV/ITV data bases aid the distribution operations branch in providing the daily picture of the distribution network to the TSC deputy commander for support operations and the TSC commander.

Section II. Movement Control in the COMMZ

4-6. MOVEMENT CONTROL AGENCY. The Army executes COMMZ movement control through an MCA with subordinate MCBs. The MCA operates under the C2 of the TSC. The MCA implements the theater priorities established by the ASCC with guidance from the TSC deputy commander for support operations. This requires close direct coordination with the ASCC deputy chief of staff for operations for force movements. It also requires close coordination with the MMC.

The MCA organization is flexible and designed to meet the specific transportation and movement control requirements of the theater. A detailed description of personnel is in Appendix D. The MCA uses a building block concept, which assigns the correct mix of battalions and teams to perform its missions based upon the following:

- Geographic size of the theater.
- Number of forces.
- Transportation infrastructure.
- Number and type of movement requirements.

The MCA plans and coordinates reception and onward movement so units, personnel, and materiel are received in the theater and delivered to destinations with minimum delays. It also coordinates and maintains the status of shipments into the theater and their delivery to destinations.

The MCA's mission is to provide movement management services and highway traffic regulations to coordinate personnel and materiel movement into, within, and out of the theater. It coordinates with allied nations, HNs, sister-Service movement control organizations, and USTRANSCOM or its components as required. As the senior MC organization, the MCA does the following:

- Manages distribution in coordination with the DMC by balancing the existing capabilities of the distribution system with the day-to-day and projected operational requirements.
- Manages transportation flow capability by maintaining visibility of resources that are being transshipped at or transiting the nodes.
- Coordinates the use of road networks.
- Monitors the movement of personnel and the associated support requirements.
- Supports US, allied nation, and HN forces as required. It can be structured as a combined, unified, or US Army agency as determined by the theater commander.

- Prepares movement and port clearance plans and programs, including reception and onward movement.

- Conducts liaison with higher and lower movement control organizations, HN transportation agencies, transportation mode operators, and customers.
- Maintains status of movement capabilities.
- Commands and controls movement control battalions.
- Provides technical assistance to Corps MCB.
- Supports the transportation requirements of its MCB and the Corps MCB.
- Develops theater movement control procedures.
- Coordinates the movement of major units.
- Prepares and recommends policies to control, regulate, and expedite the movement of intermodal assets (leased containers, flatracks, 463L pallets, and so forth) within the theater.
- Recommends site selection for transportation activities (truck terminals, air terminals, railheads, pipeline take-off points, and inland waterway terminals).

The MCA must rely on the local ASG or TSC headquarters for administrative and other support. The TSC staff sections and subordinate units are located to facilitate coordination and communication with the TSC headquarters, MCBs, and TRANSCOM. Figure 4-5 shows the MCA organized along functional lines.

The MCA maintains close functional relationships with CONUS transportation activities and theater customers. The following describes the supporting relation from CONUS to customer.

a. CONUS Activities. CONUS-based activities provide the MCA advance information on unit and nonunit personnel and resupply strategic movements. The computer systems of these organizations must interface to ensure that transportation data manifest and other information are rapidly available. The MCA can then make more timely decisions to facilitate reception and onward movement.

b. ASCC. The MCA interfaces with the ASCC staff for force deployments and movement of units in order to stay current with changing needs of the supported commander. Constantly changing situations and priorities require immediate response and adjustments by the movement control community. This direct interface allows the MCA to influence plans early on to ensure transportation feasible solutions and immediate dissemination to the network that supports the movements.

c. Theater Transportation Services. The MCA provides movement control services to all customers in the COMMZ and backup support to the CZ. It selects the transportation mode suited for each movement and coordinates cargo transfer operations. To perform this mission, mode operating units and terminals must keep the MCA or its subordinate units advised of their current and projected capabilities and report the status of movements as directed. The MCA exchanges reports and plans with USTRANSCOM and MTMC. These include traffic and port analyses and reports on emergency situations that might curtail service over any portion of the transportation system. The MCA and its subordinate units commit mode operators to provide transportation services.

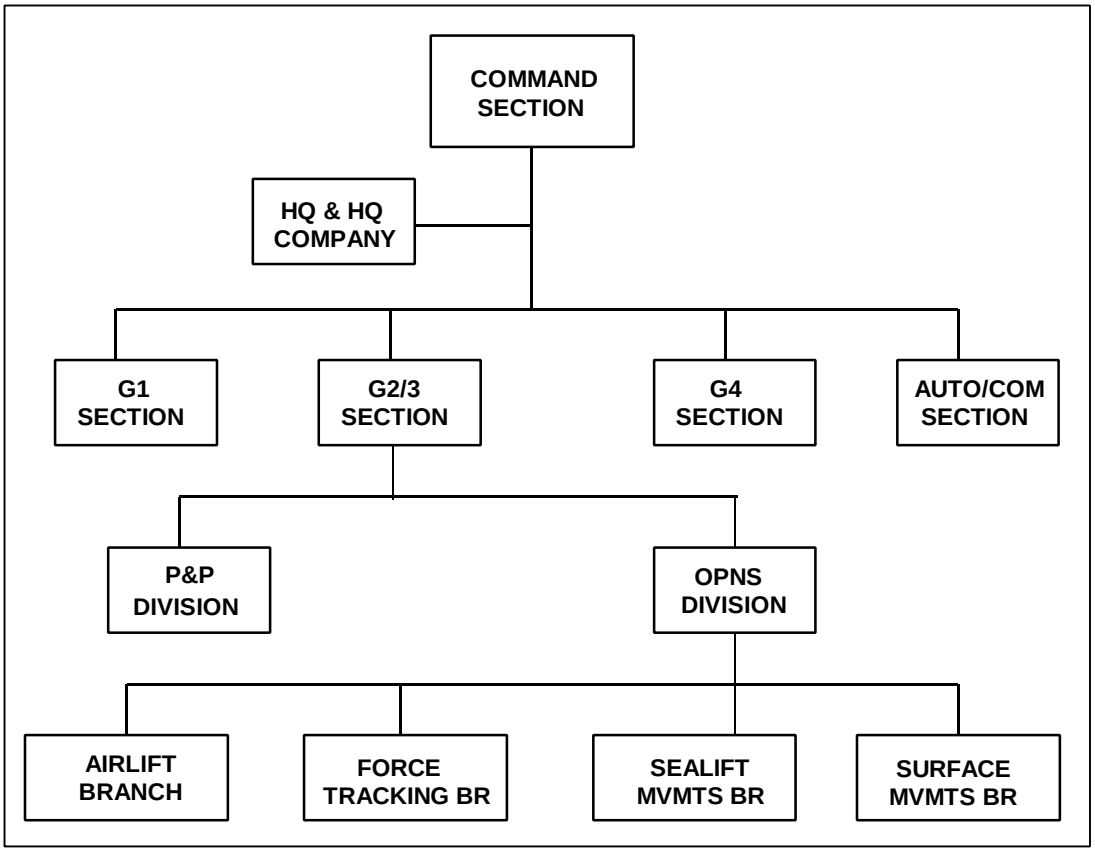

Figure 4-5. Movement Control Agency Organization

d. Theater Support Command Materiel Management Center. The TSC MMC provides movement requirements to the MCA for movement of materiel. Enhanced automation capabilities improve coordination of theater movement services and advanced reporting of incoming cargo shipments.

e. TSC Assigned and Attached Units. The TSC supply and maintenance activities are heavy users of transportation services. These activities request transportation through the servicing MCT. The MCT will select the mode based on the priority and nature of the mission.

f. TRANSCOM. The TRANSCOM is the principal operational level Army transportation headquarters in the theater. Although located in the COMMZ, it is functionally arranged to provide theaterwide transportation services. It may include transportation composite groups, motor battalions, railway operating battalions, and terminal battalions. These units will operate as far forward as required.

g. MEDCOM. The TSC MCA maintains normal relationships with the MEDCOM as a transportation user. It also coordinates with the MEDCOM for its transportation requirements in scheduling and routing the movements of patients.

h. PERSCOM. Replacements process through the GS replacement units under the operational control of the PERSCOM. The replacement companies coordinate with their servicing MCT for movement of replacements to corps and EAC units.

i. Military Police. MP units engage in traffic control activities and support movement control by enforcing highway regulation plans. They ensure that only authorized traffic uses controlled MSRs through the use of traffic control points, roadblocks, checkpoints, and holding areas. They also submit enemy prisoner of war movement requirements to the servicing MCT. MP teams patrol between static posts to monitor traffic and road conditions. They gather information on friendly and enemy activities and assist stranded vehicles and crews. They report road condition changes and enemy actions along the MSRs to MRTs operating in the area. In coordination with movement control organizations, MPs will reroute oversized or overweight vehicles that cannot pass on their intended route. The MCA coordinates rerouting and diversion instructions through their own battalions and teams. The MP brigade and the MCA ensure that MPMIS information concerning MSRs is quickly passed to MRTs.

j. Air Force. As a user of the Army transportation system, the Air Force requests transportation support from its servicing MCT. As a mode operator, Air Force mobility forces provide strategic and special-mission airlift. The MCA provides an airlift coordination office to the air component commander's C2 agency to coordinate the use of airlift apportioned to the Army. The airlift coordinating office is responsible for relaying and coordinating Army requirements for channel and special-mission airlift and/or coordinating the diversion of airlift personnel or material of Army interest. Final coordination is accomplished between the port MCT and TALCE.

k. Corps MCB. A close working relationship between the MCA and Corps MCB is required to coordinate the movement of units and materiel from the COMMZ to the CZ. Movement programs and Highway Regulation plans must be coordinated to provide for an uninterrupted flow of traffic within and between AOR. The Corps MCB provides the MCA information concerning the capabilities of corps units to receive shipments and on highway plans in the corps area.

l. Host Nation. HN support may encompass all forms of transportation and terminal operations. Certain support will be planned to expedite movement during the transition to war. Other support will be dependent on contingency arrangements. Both rely on close coordination between the MCA and the appropriate level of HN command. Planners must recognize that the HN will have its own civil and military commitments. These commitments may limit the support available or the time within which it can be provided.

4-7. MOVEMENT CONTROL BATTALION AT EAC. To decentralize execution of its transportation management and movement control functions, the MCA may divide the AO into transportation movement regions. The number of customers served, number of modes and nodes, and the geographical size of the AO determine the size of the regions. Regional boundaries may or may not coincide with other military or political boundaries. MCBs (EAC) provide C2 of the movement control functions in these regional areas. The EAC MCB is organized as shown in Figure 4-6.

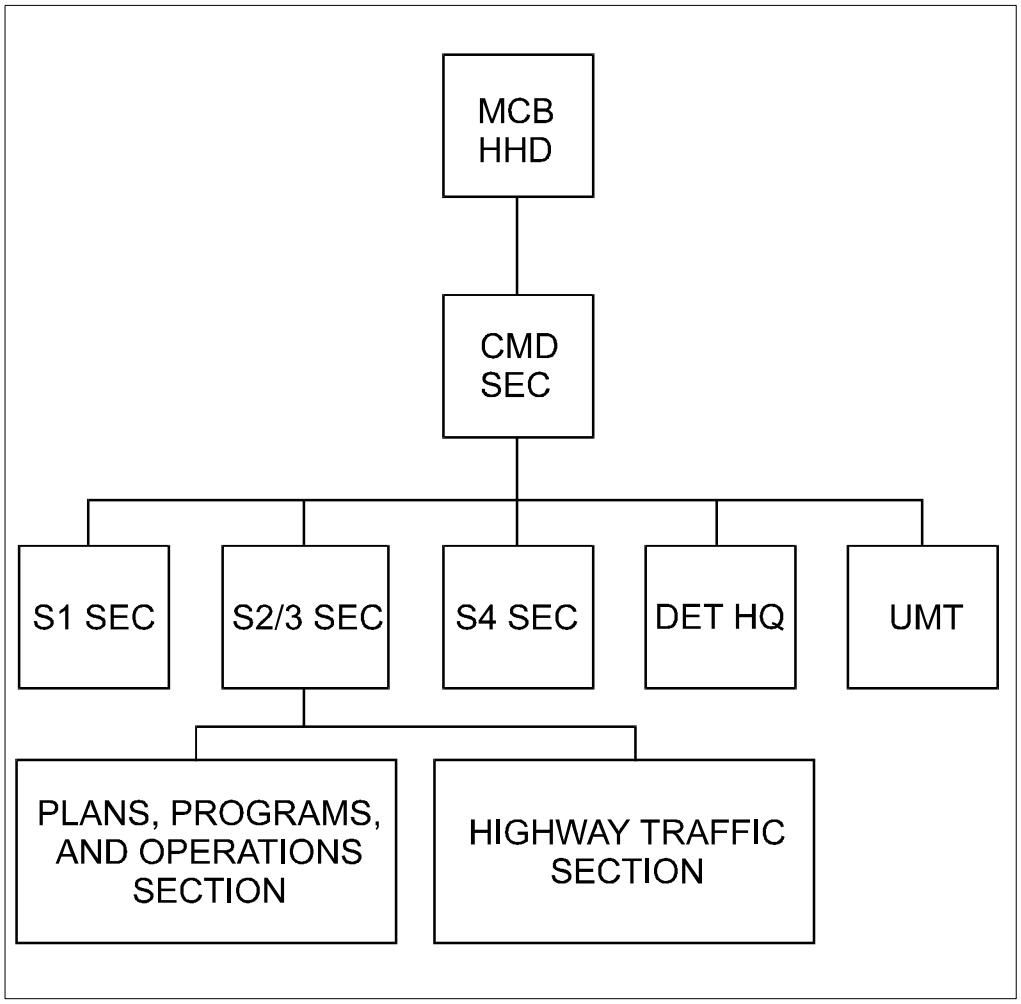

Figure 4-6. EAC MCB HHD Organization

The MCB is responsible to the MCA for the control and management of movement matters that take place in their respective regions. The MCA determines which specific functions the MCB will perform. The MCB (EAC) provides command, control, and supervision of subordinate MCTs. A MCB will have as many subordinate MCTs as required to operate in their region based on factors such as number of customers; air terminals, rail terminals, and sea ports; and MSRs. Other responsibilities of MCTs are as follows:

- Coordinates with Corps MCBs, HN transportation agencies, transportation mode operators, and customers.
- Assists in planning and executing plans for the reception, staging, onward movement, and retrograde of personnel and/or equipment and cargo. This includes actions associated with marshaling and staging areas.
- Monitors, manages, and executes the MCA's movement and port clearance plans and programs.

- Monitors the use of trailers, containers, and flatracks located in its AOR. Coordinates with users to expedite return of these assets to the transportation system.
- Applies and meets the priorities provided by the MCA. Performs highway regulation functions in its AOR to prevent congestion. Balances transportation assets with requirements according to directed priorities. Advises the MCA on the need for cross leveling.
- Coordinates with HN authorities for cargo transfer locations and for transportation support.

The battalion and its subordinate teams provide area movement control support for all COMMZ units in an area assigned by the MCA. The TOE for the MCB is at Appendix D.

4-8. MOVEMENT CONTROL TEAMS. MCTs are attached to MCBs in the COMMZ and CZ to decentralize execution of movement responsibilities on an area basis or at key transportation nodes. The various sizes and capabilities of the MCTs provide flexibility in assignment based on anticipated workload. The five types of MCTs are as follows:

- Port movement.
- Area movement.
- Movement regulating.
- Division support.
- Cargo documentation.

A more detailed description of MCTs can be found in Appendix D.

a. Port Movement Control Team. Port MCTs are positioned at air terminals or sea ports within the theater to coordinate expeditious clearance of personnel and cargo. This is the principal MCT that coordinates transportation requirements for movement of units as they arrive in theater. Responsibilities include scheduling, controlling, and coordinating movements. It is responsible for ITV of personnel, unit equipment, and sustainment supplies moving over the node. It includes commitment of assigned modes and terminal assets according to command planning directives.

b. Area Movement Control Team. Area MCTs coordinate transportation support for movement requirements of theater storage areas, corps storage areas, supply support activities, and medical supply points in a given geographical location and nondivisional units operating in a division area. Responsibilities include scheduling, controlling, and coordinating movements. They are also responsible for the ITV of personnel, unit equipment, and sustainment supplies moving along LOCs. This includes commitment of assigned modes and terminal assets according to command planning directives.

c. Movement Regulating Control Team. The mission of these teams is to operate in separate sections employed throughout the AO in key locations to observe, assess, and report progress of tactical and nontactical movements along MSRs. These teams also implement movement schedule changes as necessary to coordinate the movement of authorized traffic, resolve movement conflicts, and provide first destination reporting points.

d. Division Support Control Team. The mission of these teams is to augment the DTO. The DTO in the division structure is limited in the manning required to conduct the full range of transportation support planning, programming, and operations required for combat operations. This team provides movement control functions on a 24-hour basis. They assist the DTO in scheduling, controlling, and coordinating movements. They also maintain ITV of personnel, unit equipment, and sustainment of supplies moving in a division area.

e. Cargo Documentation Team. The mission of these teams is to provide cargo documentation for the transshipment of cargo in water, air, rail, and motor terminals. These units provides documentation required to load, discharge, or transship 500 short tons of general cargo or 480 containers daily in a water, rail, truck, or air terminal.

CHAPTER 5

TACTICAL MOVEMENT CONTROL

Section I. Movement Control in the Corps

5-1. INTRODUCTION. The corps combines the operational and tactical levels of war. The corps will conduct numerous types of movements. The principal types will be unit movements and sustainment. All movements operating concurrently, must be coordinated, ensuring a continuous flow of available transportation assets, infrastructure, and LOCs.

Movement planning is conducted by the Corps G3 and G4 staffs, MCB, and by the COSCOM support operations staff (Figure 5-1). On the Corps coordinating staff, the G3 plans and directs maneuver and recommends Corps priorities. The G4, in coordination with the CTO and COSCOM support operations staff, recommends logistical support priorities. The CTO receives technical support from the MCB and the COSCOM Transportation Support Branch.

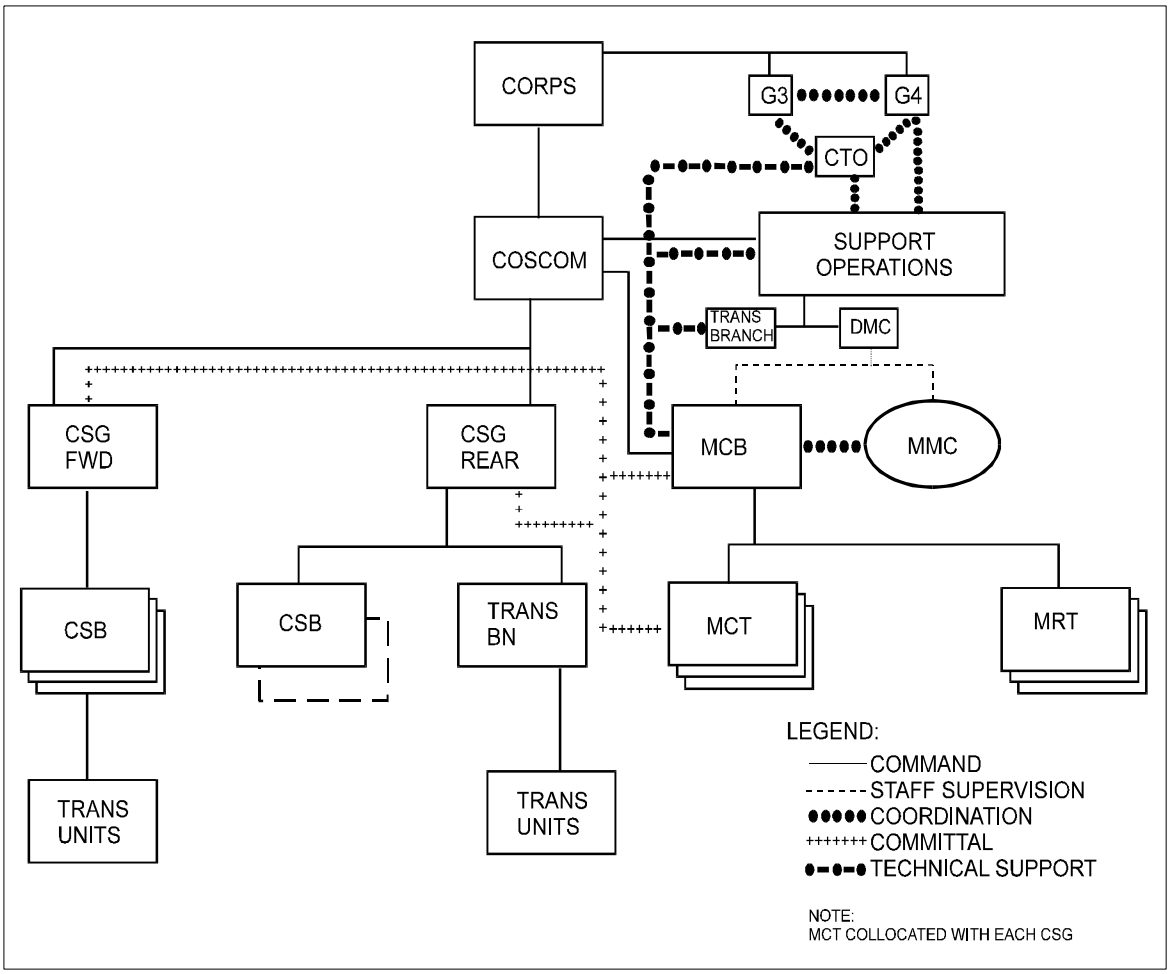

Figure 5-1. Corps Transportation C2

The COSCOM provides logistical support to the Corps and an integrated distribution system in the Corps area. It does this through the coordinated planning of the COSCOM staff, subordinate CSG, and its distribution materiel and movement management functional centers. The Corps MCB centralizes movement control and highway regulation to support Corps operations.

5-2. CORPS HEADQUARTERS STAFF. The Corps headquarters staff consists of the G3, G4, and CTO. Each of their duties is described below.

a. G3. The G3 plans and directs movement and maneuver of combat units through or within the Corps area. This may require rapidly projecting these forces over extended distances on MSRs. The G3, coordinating with the G4, establishes priorities for using MSRs for movements and maneuver. Maneuver will normally have priority over movements. However, maneuver must be well coordinated with movements to prevent route congestion, enforce movement priorities, and provide continuous logistical support. Movement planners may also assist the G3 in planning the movement of combat forces. The G3 provides staff to the MCB. The G3 air allocates Army aviation support.

b. G4. The G4 establishes logistical support plans. The G4, using the recommendations of the CTO, establishes plans and implements logistical support priorities for movement. These priorities become the basis of the Corps distribution plan developed by the COSCOM support operations staff, the movement program and Highway Regulation Plan prepared by the MCB, and the traffic control plan prepared by the provost marshal.

c. Corps Transportation Officer. The CTO is a special staff officer who works for the CofS. The CofS has the option of placing the CTO under the staff supervision of the G3 or G4. The CTO coordinates with the G3 during unit movement, force tracking, and maneuver planning. He also assesses the impact for transportation requirements and highway regulation in the Corps area. He advises the G4 of logistics and unit movement requirements. This may include support of reception and onward movement of forces, replacement operations, and reconstitution. The CTO assesses the overall effectiveness of the movement programs and recommends the type of transportation units and assets required to accomplish the Corps mission. Other CTO duties include the following:

- Coordinates transportation planning with MCA, COSCOM support operations staff, division, and separate brigade transportation officers to determine requirements and coordinates with TSC and DISCOM support operations staffs to establish procedures for movements that cross boundaries.
- Plans transportation support, develops policies, provides guidance, and recommends movement priorities and procedures for movement control and highway regulation.
- Plans, coordinates, and oversees large or special movements in conjunction with the MCB.
- Guides and assists major subordinate commands and units transiting the Corps area.
- Prepares, in conjunction with the Corps G4, MCB, and COSCOM support operations staff, the transportation portion of the Corps plans and orders.
- Recommends road repair priorities and improvements for the road network in the Corps area in coordination with the Corps engineer.
- Coordinates with the G3, DMC, PM, and MCB to coordinate traffic control and Highway Regulation Plans.

- Coordinates with the G5 and MCB to plan for the movement of displaced civilians.
- Assesses and recommends requirements for HNS.
- Coordinates policy and procedures with the joint movements center when the Corps is the Army component of a joint force.

5-3. CORPS SUPPORT COMMAND. The COSCOM serves as the multifunctional support headquarters at the Corps level. COSCOM support operations is the focal point for tactical logistics support to the Corps. Both the Corps MCB and transportation mode operating units are assigned to the Corps and attached to the COSCOM. The COSCOM DCG(S) exercises staff supervision for transportation. The DCG(S) has a transportation branch to execute his responsibilities. The DCG(S) also exercises staff supervision over the Corps MCB (see Figure 5-2, page 5-5).

a. Deputy Commander for Support. The DCG(S) integrates external logistics support for the Corps. Transportation support includes the following:

- Approving plans, policies, and programs to support transportation movement control, highway regulation, and cargo transfer operations in the Corps area.
- Advising the COSCOM commander on the effective use and operation of transportation units and services.
- Developing support relationships that become the basis of the distribution system and Corps movement program.
- Integrating supply and transportation requirements and capabilities to develop the Corps distribution system.
- Recommending allocation and positioning of transportation units attached to subordinate units of the COSCOM, including cross leveling of assets or units to weigh the Corps battle.
- Coordinating the work of the MCB and CMMC for sustainment.
- Planning and recommending logistical sustainment of Corps movement control and mode units and facilities.
- Providing input to the CTO in developing Corps movement annexes and transportation estimates.
- Planning continuity of support during operational movements of the COSCOM.

b. Transportation Support Branch. The transportation support branch is a planning staff that integrates and coordinates transportation planning with all other support operations provided by the COSCOM. This branch is under the supervision of the Deputy Commander for Support Operations. The transportation support branch executes planning responsibilities vested in the Support Operations Office for the movement function. These responsibilities include the following:

- Recommending and coordinating plans, policies, and programs to support transportation, movement control, highway regulation, and cargo transfer operations.
- Recommending movement management policies for the COSCOM.
- Preparing estimates, plans, and recommending policies for movement control, mode operations, and terminal operations.

- Developing input for Corps movement annexes and transportation estimates.

- Reviewing Corps orders for transportation supportability and specified and implied tasks.
- Coordinating plans for throughput from theater to the tactical level, intermodal operations, and trailer transfer operations.
- Coordinating with the COSCOM procurement support branch on the acquisition and use of HN transportation resources based on the Corps movement program or other planning documents.
- Recommending locations of transportation nodes and units to support the distribution system and Corps movement program.
- Recommending changes in allocation of transportation units based upon changes in the distribution plan or to weigh the Corps battle.
- Advising the COSCOM deputy commander for support operations on the effective use and operation of transportation units.
- Reviewing materiel distribution plans to ensure that they can be supported by existing transportation infrastructure.
- Developing input to the transportation portion of contingency plans.
- Recommending requirements to construct, improve, or maintain transportation facilities.
- Determining support requirements for Corps movement control and mode operating units and facilities.
- Providing input to the Corps movement program.
- Coordinating transportation plans and policies with the CTO, Corps G4, COSCOM DMC, CSG transportation branch staff, DTOs, MCA, and TSC DMC.
- Developing the transportation movements annex to COSCOM OPLANs and consolidating input to the Corps administrative/logistics plan for personnel and materiel movements.

The COSCOM DMC, operating as part of Support Operations, performs centralized distribution management within the CZ. The DMC provides single point management for distribution in the CZ. They exercise tasking authority and staff supervision over the CMMC and Corps MCB. The Chief, DMC is responsible to the COSCOM Deputy Commander, Support for the distribution within the Corps. There are many similarities between the TSC and COSCOM DMC operations. The COSCOM DMC concerns itself primarily with tactical operations and has a forward focus.

5-4. MOVEMENT CONTROL BATTALION (CORPS). The Corps MCB is the Corps movement control organization. It provides centralized movement control and highway regulation for moving personnel and materiel into, within, and out of the Corps area. It also ensures effective and efficient use of available transportation capability. The Corps MCB commands and supervises attached teams engaged in movement control and highway regulation. It plans, programs, coordinates, manages, and analyzes transportation and movement requirements and implements Corps priorities. The Corps MCB performs transportation planning, highway regulation, ITV, asset visibility, and liaison with COMMZ movement control organizations and MPs.

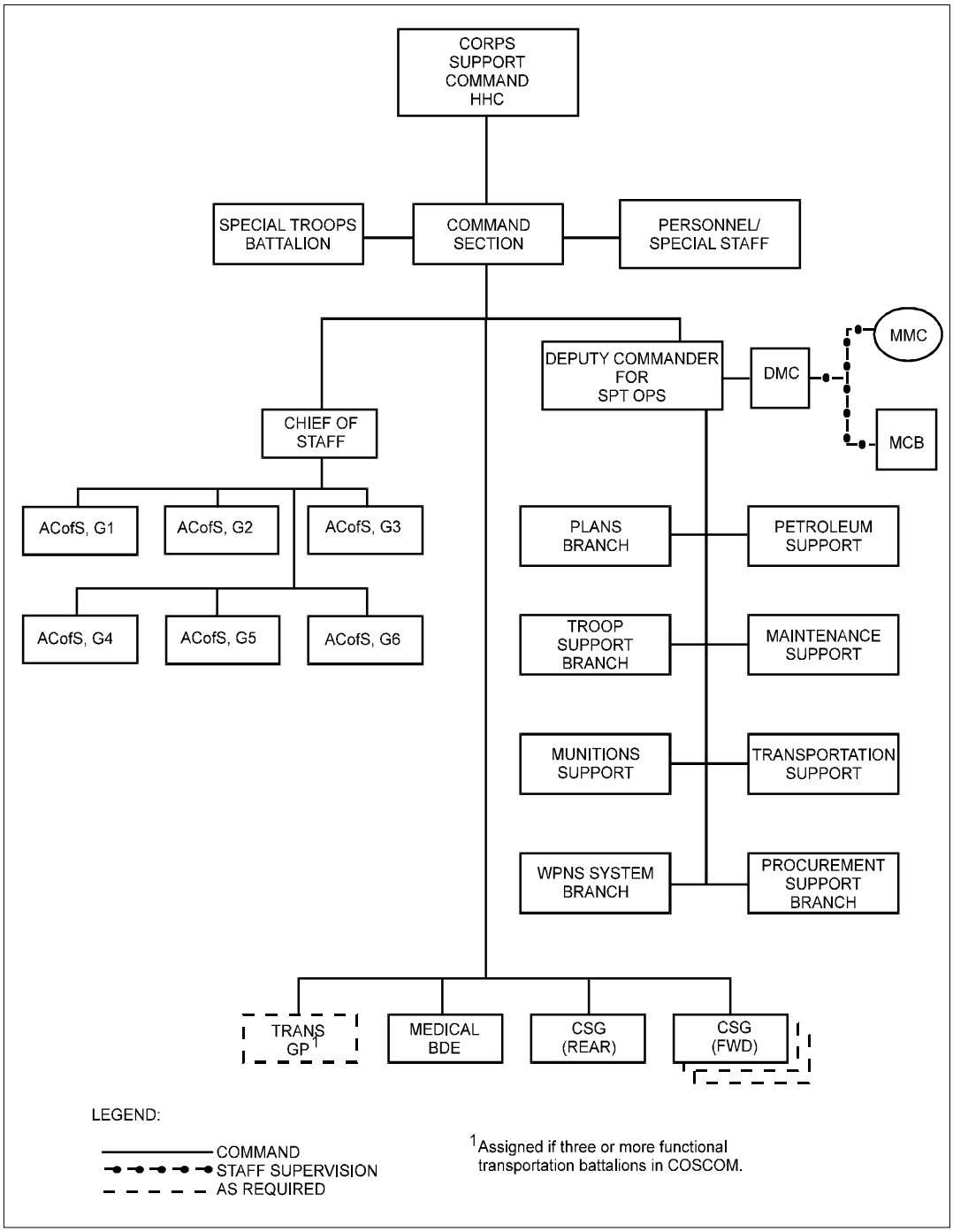

Figure 5-2. Corps Support Command

The MCB is organized as shown in Figure 5-3. The MCB commands and controls its functional divisions. It also commands, allocates, and supervises the operation of attached or assigned MCTs and MRTs. The MCB and its attached teams require personnel, administrative, food service, and maintenance support from the COSCOM Headquarters, Headquarters Company or other designated units.

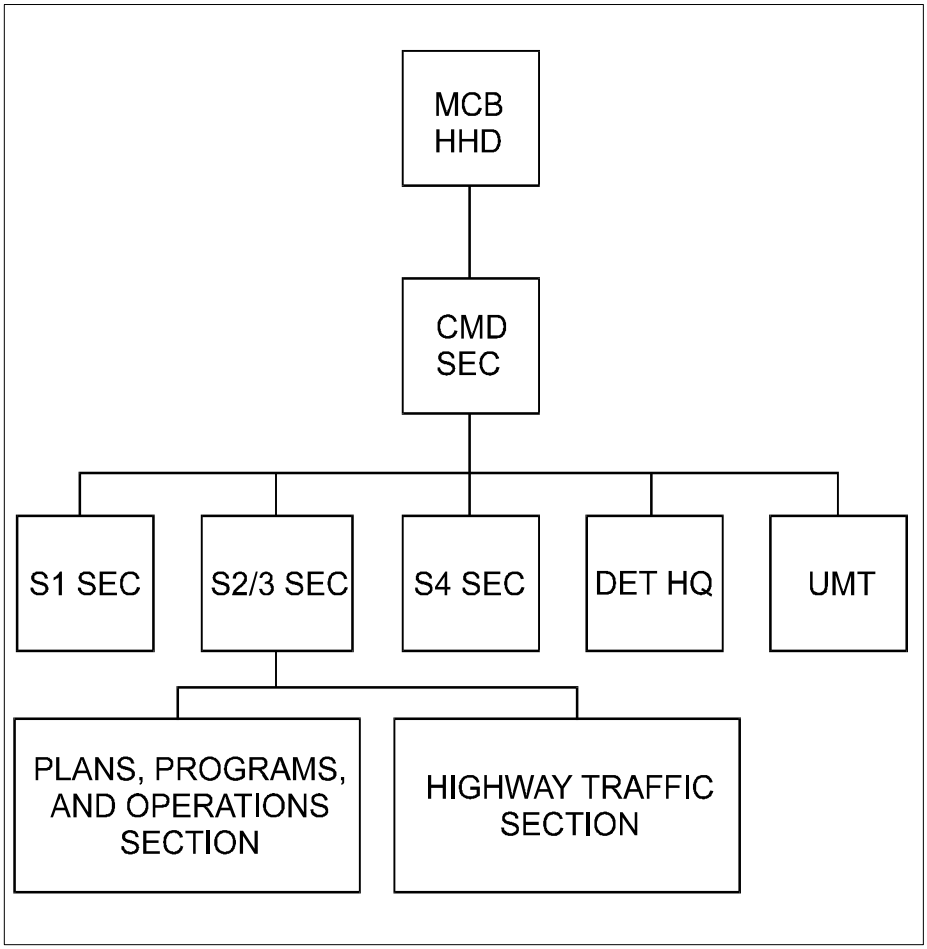

Figure 5-3. Corps MCB HHD Organization

The command section and headquarters detachment normally collocate with elements of the PP&O section and the highway traffic section. These two sections may also provide personnel to other locations in the Corps area based on mission requirements. Portions of the highway traffic section may collocate with the Corps rear CP operations cell. The CPs operates on a 24-hour basis normally with two 12-hour shifts. Personnel staffing per shift is based on anticipated workload. It is normally located near the Corps MMC to allow close coordination between movement and materiel managers.

a. Detachment Headquarters. The detachment headquarters provides or coordinates administrative and logistics support for the MCB and its attached teams.

b. Plans, Programs, and Operations Section. The PP&O section is responsible for surface, logistics air, rail, barge movements, and container management. If assigned, the AMC liaison officer will operate in this section. This section coordinates support and maintains the status of transportation activities throughout the Corps. This section also does the following:

- Develops and implements the Corps movement program based on movement requirements submitted by Corps major subordinate commands and the COSCOM.
- Coordinates and monitors the status of inbound and outbound movements from the Corps rear area.
- Plans support for reception and onward movement.
- Performs transportation planning according to priorities established by the Corps G3/G4 in coordination with the COSCOM Deputy Commander for Support Operations. Provides planners to assist the CTO during initial planning stages of each operation.
- Programs and commits transportation assets to meet movement requirements according to Corps priorities.
- Coordinates transportation support and maintains status of transportation activities throughout the Corps.
- Recommends reallocation or relocation of transportation units or assets to meet exceptional movement requirements.
- Maintains liaison with theater, joint, combined, and adjacent Corps movement control activities.
- Maintains ITV of shipments and diverts, reconsigns, or holds cargo in transit.
- Reports the status and location of containers to maintain ITV.

c. Highway Traffic Section. The HTS performs highway regulation within the Corps AOR. It coordinates movement originating in the Corps area which terminates outside the Corps with the MCA, other MCB highway traffic sections, DTOs, and HN. This section also does the following:

- Provides highway regulation planning assistance to the Corps G4 and CTO to designate MSRs and establish control measures to support the concept of operations.
- Develops Highway Regulation Plans.
- Coordinates unit movement requirements with the Corps G3.
- Provides transportation route overlays and traffic circulation plans to support Corps OPLANs.
- Coordinates with the Corps G2, G3, engineer, PM, and MPs for route classification and selection.
- Coordinates placement of MRTs.
- Collects, processes, and distributes information on MSR status.
- Plans, routes, schedules, and manages traffic according to command priorities.
- Issues movement credits for approved movements.
- Provides instruction for diversion or rerouting based upon the condition of MSRs, enemy activity, or congestion.

- Coordinates large unit movement tables with other movements and maneuvers.
- Coordinates enforcement of Highway Regulation Plans with the PM, MP brigade, and HN.

The Corps MCB commander positions teams throughout the Corps area to extend his control to critical transportation nodes, facilities, or operating units. Allocation of teams includes the following:

- One MCT per CSG and division, at each critical transportation node in the Corps area, and at air, rail, and sea ports.
- MRTs at key transportation nodes and other critical locations on MSRs to expedite surface movements.

In addition to the teams discussed in Chapter 4, the Corps will have a division support team to augment the DTO.

5-5. FUNCTIONAL RELATIONSHIPS. The following are the functional relationships of the Corps MCB to the MCA, HN, and other staffs and headquarters.

a. MCA. The MCA provides guidance and technical assistance to the Corps MCB. The MCA provides movement programs, policies, and procedures established by the ASCC. Close working relationships and direct communications between the Corps MCB and the MCA are required. The MCA also coordinates theater plans with the Corps MCB to ensure unity of effort. The MCA provides additional MCTs to the Corps MCB when the Corps MCB requires additional movement control capabilities to meet operational requirements of the TA.

The Corps MCB must also coordinate Corps personnel and materiel movements with the MCA and furnish the MCA the Corps commander's priorities. The Corps MCB provides the MCA Corps reception and processing capabilities and ITV information.

b. Host Nation. The HN may provide transportation assets, facilities, movement control, and highway regulating capabilities to the Corps area. These arrangements and plans will normally be coordinated between the COSCOM staff and HN authorities. The Corps MCB will then implement these plans and interface with HN movement control.

c. Corps PMs and MPs. The Corps PMs and MPs integrate movement control and Highway Regulation Plans into the MP battlefield circulation control plan. They provide traffic control on MSRs and enforce Highway Regulation Plans. They reroute and divert traffic as required by the tactical situation or as directed by the Corps MCB. They also provide reports to the MCB on the status of MSRs.

d. Division Transportation Officers. DTOs, through the supporting CSG MCT, coordinate with the Corps MCB and the CSGs to obtain transportation assets to meet division requirements beyond the division's organic capability. They also provide input to the MCB to coordinate the Corps movement control and Highway Regulation Plan.

e. Transportation Group. A transportation group is required if three or more functional transportation battalions are assigned (see Figure 5-2).

5-6. MCB AND CSG INTERFACE. The COSCOM tailors its CSGs to meet the needs of the supported force. CSGs are subordinate commands of the COSCOM. CSGs also provide responsive logistics support to Corps units, whether those units are employed in the Corps rear area, a division rear area, or in support of a separate brigade. The basic mission of the CSG will vary depending on whether the CSG is employed as a forward CSG behind a division or as a rear CSG to support the Corps rear area. Transportation units are positioned in the CSGs to facilitate distribution. The CSGs must be responsive to the direction of the MCB when committed to provide transportation support.

Forward CSGs are the primary source of logistics support for Corps organizations in their AO. This includes Corps forces in the division forward area and the armored cavalry regiment area during covering force operations. They also provide backup support to the division. It provides this support through its subordinate multifunctional Corps support battalions. Each CSB in a forward CSG has truck companies (normally light/medium truck companies) assigned to support transportation requirements in its assigned geographic area. The CSG coordinates habitual support among transportation units and conventional ammunition and petroleum units. The CSG also supports other movement requirements in its area on a mission basis. Normally, one CSB will be located in the division rear. The CSG commander may task force organize the CSBs to weigh support as needed.

The rear CSG focuses on supporting the Corps and providing reinforcing support to the forward CSGs. The rear CSG consists of functional battalions and one or more multifunctional CSBs. The rear CSG's transportation battalion provides Corps-wide transportation support of tactical operations. Depending on its organization, its truck companies move cargo, unit equipment, and ammunition and relocate heavy maneuver forces. The cargo transfer companies operate either a breakbulk or container operation at air, rail, motor, and water terminals.

An additional transportation battalion is located in the rear CSG for command and control of the combat HET companies. The HET companies are assigned to Corps to provide operational and tactical mobility to the heavy force. Using the HET to displace heavy armored forces, either tactically or operationally, increases the maneuver commander's capability to quickly and efficiently shift his forces on the battlefield to attain and keep the initiative. It also keeps the forces available in a high state of operational readiness.

The forward and rear CSGs and their subordinate CSBs have support operations sections with transportation support branches. Within the rear CSG, the transportation support branch tasks transportation units of the transportation battalion based on commitments from the area MCT collocated with the rear CSG headquarters. In the forward CSGs, the transportation support branch tasks the transportation units of its CSBs based on commitments for the area MCT collocated with the CSG headquarters and may also reallocate transportation units among its subordinate CSBs. The CSB transportation support branch does the following:

- Places truck companies in habitual support of ammunition and petroleum companies.
- Matches requirements against capabilities.
- Reports assets availability to the area MCT.

- Tasks subordinate truck companies for mission support.

The MCB collocates an area MCT with each CSG HQ to commit CSG transportation assets to execute the movement program, fill validated requirements in the CSG, and monitor asset use, availability, and readiness of CSG transportation assets. The area MCT will also maintain asset visibility, including containers and trailers in their area, through the CSG support branches. It will request additional transportation support and coordinate backhaul from the Corps MCB.

5-7. TRANSPORTATION REQUEST PROCESS. Subordinate companies in the CSB request transportation support from the CSB transportation support branch. The transportation support branch tasks its truck companies to fill these requirements based on habitual support relationships, recurring distribution requirements, and commitments passed from the CSG (Figure 5-4). The CSG transportation support branch tasks available assets from other CSBs while coordinating with the area MCT. If CSB requirements are projected to exceed available assets, the CSG cross-levels transportation assets among CSBs to meet all requirements within the CSG based on command priorities. If the CSG still requires additional capability, it will request additional assets from the area MCT collocated with the CSG. The area MCT will pass validated movement requirements to the Corps MCB, which can commit another CSG to support the requirements. The Corps MCB can also recommend to the COSCOM support operations to reallocate Corps transportation units between CSGs based on changes to the distribution pattern in the Corps.

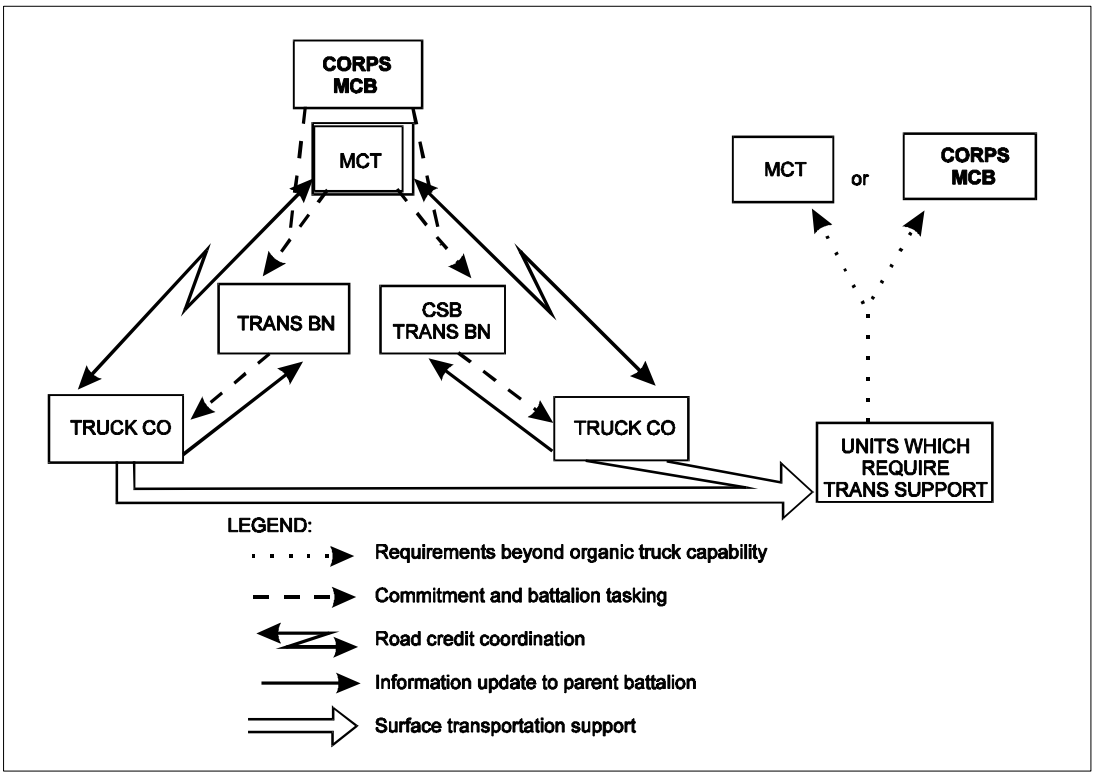

Figure 5-4. Surface Transportation Request and Commitment Flow

The CSG transportation support branch monitors the status of available assets within its CSBs and will, through the support operations section, cross-level assets among the CSBs to accomplish the mission. It will continue to pass requests for CSS air movement operations through the MCT to the Corps MCB for committal of allocated Army assets and validation of requests for Air Force assets.

When the MCO or nondivisional units in the division rear need additional transportation assets, they will request them through the area MCT collocated with the CSG. If the CSG supporting the division cannot provide the support, the MCT will pass the requirement to the Corps MCB. The Corps MCB will assess the transportation capability within the other CSGs to support the requirement and commit the CSG that can best provide support.

Section II. Movement Control in the Division

5-8. INTRODUCTION. Division transportation links the other logistics functions into a system dedicated to supporting the division maneuver elements and their weapons systems. Movements planning and execution in the division is a staff responsibility, rather than being vested in operational units found at Corps and EAC. The DTO, DISCOM DMC, and the MCO coordinates and controls division transportation operations. Movement control at division level also includes the movement of noncommitted units in the division area. This requires close coordination between the G3 and G4. The G3 plans and directs maneuver. The G3 air allocates aviation assets. The G4, through the DTO and DISCOM support operations staff, plans movements.

Movement and maneuver of combat forces are normally given priority over other movements, even though CSS traffic is essential to the success of battles. Planning and regulating movement requires close coordination among the division staff and the commanders and staffs of the brigades, separate battalions, and companies (Figure 5-5).

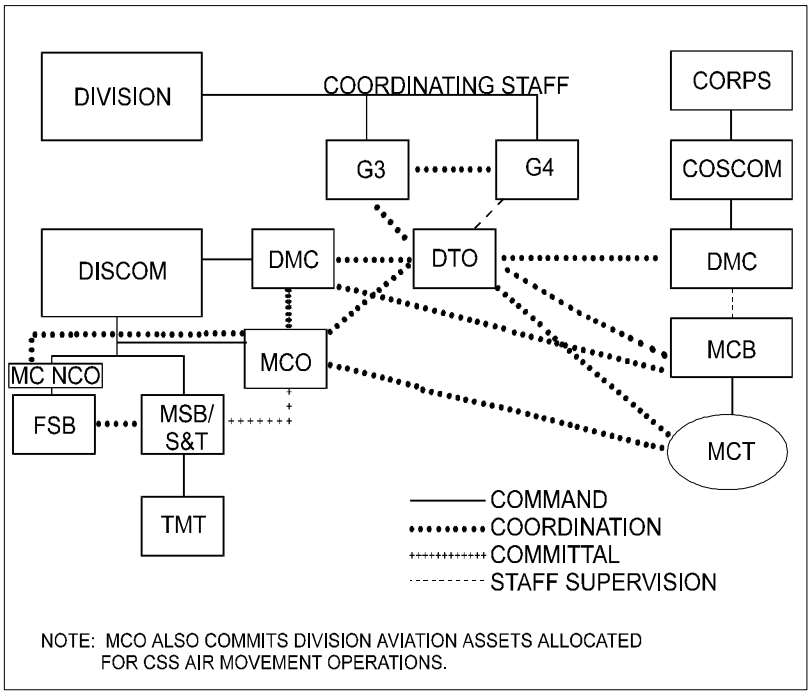

Figure 5-5. Division Transportation C2

5-9. ORGANIZATION. Movement control planning and transportation management functions are the responsibility of the DTO. The DTO is a special staff member under the supervision of the G4. The DTO works closely with the G3. The composition of the division transportation office is based on the type of division. The DTO normally delegates responsibility for movement programming, mode management, and transportation management to the DISCOM MCO.

Brigade HQ has no separate transportation staff. The brigade S4 normally performs transportation functions with assistance from the FSB. The brigade S4 does the following:

- Responsible for highway regulation in the brigade rear area.
- Establishes MSRs in the brigade area in coordination with the DTO and DISCOM DMC.
- Coordinates with the DTO for highway regulation and movements that cross the brigade rear boundary.
- Coordinates with the FSB support operations to obtain transportation support when requirements exceed the capability of the brigade.

Division maneuver and combat support battalions and squadrons do not have separate transportation staffs. The battalion S4 normally performs transportation functions with help from the support platoon leader. Their TOEs provide vehicles to support limited movement requirements such as resupplying their companies from the BSA. The battalion S4 requests transportation support and movement clearances through their brigade S4.

Brigades and battalions depend on the DISCOM to provide transportation support when requirements exceed their organic capabilities. Each brigade, depending upon the type of division, receives logistical support from a FSB in the BSA. The movement control NCO, in the support operations office of the FSB, is the brigade S4's POC for transportation support from the DISCOM. The FSB forwards requirements to the DISCOM MCO. The MCO has committal authority for truck assets assigned to the TMT company assigned to the MSB in the DSA.

5-10. DIVISION TRANSPORTATION OFFICER. The DTO is a staff planner who coordinates with the division G3 on tactical moves and operations. The DTO coordinates with the G4 on logistical and administrative matters. He also provides guidance on transportation matters to all other staff sections and commanders of the division and the DISCOM. He provides the formal link between the division and the CTO. The DTO normally serves in the division rear CP but will operate from the main or tactical CP as required. The DTO has four primary functions: advisory, planning, coordination, and technical assistance.

a. Advisory. The DTO, as staff planner and an advisor, informs the commander and staff on transportation matters. He recommends the allocation of division transportation assets and the establishment of MSRs. The DTO conducts concurrent planning with the staff to integrate movement and maneuver. This includes providing movement control expertise for planning tactical road marches and for preparing movement orders and movement tables. He provides the DISCOM DMC and MCO with plans, policies, priorities, and assistance in transportation and movement control matters.

b. Planning. The DTO participates in the military decision-making process as a member of the division planning staff. The DTO also does the following:

- Conducts mission analysis.
- Develops, analyzes, and compares courses of action.
- Produces the transportation, deployment, movement, traffic circulation and control, and highway regulation portions to division plans, orders, and SOPs.
- Publishes movement orders.

The DTO assists the division G4 in preparing, updating, and maintaining the transportation portion of the logistics estimate. The DTO recommends and obtains division priorities for transportation and movement to incorporate in plans and orders. The DTO must coordinate with the division staff, the CTO, Corps MCB, and ITO (if applicable) to execute required planning responsibilities.

c. Coordinating. Transportation and movement control operations require continuous coordination by the DTO and the DISCOM MCO. The DTO must coordinate plans and actions with division staff, PM, division engineer, and others as required. Some functions that require coordination include the following:

- Selection of MSRs with the G3 and G4.
- Priorities with the G3 and G4.
- Highway regulation and traffic control with the PM.
- Route maintenance with the assistant division engineer.
- Air defense coverage of MSRs and transportation nodes with the assistant division air defense officer.
- Security of MSRs with the division rear CP.
- NBC status with the division chemical officer.
- Aviation support with the assistant division aviation officer and G3.
- HN resources and plans to handle local nationals who may congest MSRs with the G5.
- Cross-level non-task vehicles with the G3 and G4 when required.

d. Technical Assistance. The DTO is the focal point for transportation technical guidance and assistance to the division. He provides guidance to the commanders and staffs for planning movements and preparing movement tables and orders. He provides assistance in planning for movement by all modes, including during strategic deployment, by orchestrating the movement to POE and deployment of division assets in coordination with the G3. The DTO provides technical assistance to the divisional units for movement training which includes preparing vehicles for transport, developing load plans, loading and securing vehicles on railcars and Air Force aircraft, and reviewing convoy procedures. He provides assistance to the division G3 and G4 for selecting main and alternate supply routes. The DTO also develops the deployment, movement, and highway regulation portions of the division OPLANs and OPORDs.

5-11. DIVISION SUPPORT COMMAND. The DISCOM provides division-level logistics support to all organic and attached elements of the division. The DISCOM commander is the principal logistics operator of the division. He exercises full command authority over all organic units of the support command. The division G4 has coordinating staff responsibility for logistics planning. He develops division-level plans, policies, and procedures. The relationship between the division G4 and the DISCOM commander must be extremely close due to the similarities of interest.

a. S3. The S3 is the principal staff advisor to the DISCOM commander. The S3 plans and directs movement and maneuver of DISCOM units within the division area. The S3 also coordinates unit movements with higher headquarters staff, adjacent and subordinate units, and other units in the division's AO. He also recommends priorities for allocating critical DISCOM transportation assets.

b. S4. The S4 is responsible for all logistics matters pertaining to DISCOM units. The S4 is not concerned with division-level logistics. The S4 also coordinates transportation requests for administrative moves and submits request for highway clearances.

c. Distribution Management Center. A DMC is located within the DISCOM support operations staff. While the DISCOM DMC operates at a smaller scale than the TSC and COSCOM DMCs, the basic functions are essentially the same. The DISCOM DMC is the fusion center for distribution information and leverages technology to provide the DISCOM commander and the rest of the staff with timely and accurate information. A unique consideration for the DISCOM DMC is that the division movement control and materiel management elements operate as a part of the same staff as the DMC. However, they are not separate commands as is the case at Corps and TSC. The DISCOM DMC focuses on the distribution pipeline as it extends into the division area. The DISCOM DMC communicates priorities to materiel and movement control staff personnel. The DISCOM DMC also directs the establishment of the distribution flow within the division to include lateral redistribution and retrograde.

5-12. MOVEMENT CONTROL OFFICER. The MCO provides movement management support through control of employment of the division's motor transport assets for CSS. Movement management includes planning, coordinating, and controlling the allocation and use of available transportation resources to fulfill the commander's movement requirements. There must be a close and continuous coordination between the MCO and the following:

- DISCOM DMC.
- DMMC.
- DTO.
- Supporting area MCTs.
- Support operations section of the FSB.
- Operations office of the PM.

The MCO is the link between the division transportation mode operators and the division users of transportation. The MCO is normally located in the division rear with the DISCOM CP.

The MCO commits the MSB TMT company assets. The MCO coordinates with the supporting area MCT to get transportation resources from the Corps units when requirements exceed capabilities. The MCO ensures the accountability and return of throughput assets, including containers and pallets. The MCO commits aviation assets to support logistical requirements when these assets have been allocated by the G3 for CSS air movement operations.

The MCO develops the division movement program. He coordinates with the DMMC to determine and plan for the transportation of materiel. The DMMC has visibility over materiel distribution requirements that will require either transportation assets or movement clearance. He coordinates with the G1 to determine personnel movement requirements. The MCO also maintains close and continuous coordination with division units and the DTO to project transportation and movement requirements. The MCO also does the following:

- Advises the DISCOM commander and staff on transportation matters.
- Coordinates with the DTO to integrate preplanning and immediate requirements into highway regulation operations.
- Enforces division priorities in committing transportation assets and seeks to resolve priority conflicts and competition by employing alternate modes and times or requesting support from Corps.
- Maintains the status of transportation assets allocated to support movement requirements to include additional transportation assets placed in DS, attached, or allocated for CSS operations.
- Coordinates arrival of personnel replacements and resupply movements in the division rear with the FSB, MSB, and other units as required.
- Monitors the status of containers, flatracks, pallets, and trailers in the division area. Coordinates arrival and unloading with receiving units. Reports availability for retrograde.
- Provides transportation intelligence data to the DISCOM DMC and the DTO. This data is usually obtained through contact with the transport mode operators. These operators are movement control teams, dispatchers, truck drivers, pilots, and users of surface and air transportation facilities.
- Monitors the status of and coordinates with units to ensure adequate MHE and CHE are available for loading and unloading.

5-13. DTO AND MCO INTERFACE IN THE DIVISION REAR COMMAND POST. The division rear CP is collocated with the DISCOM CP in the DSA. The DTO and MCO normally collocate in the CSS cell. The division support MCT locates with the DTO. These combined elements comprise the movement control cell. The collocation of these elements in the rear CP provides a coordinated transportation effort and plays a major role in accomplishing the division's rear CP's doctrinal function of movement control within the division (see FM 71-100). To accomplish this mission, the DTO prepares the highway regulation and traffic circulation plan for the division road network. The MCO plans and controls division transportation assets and develops the division movement program.

DTO and MCO personnel maintain situation maps and overlays of the road networks that reflect current information on the following:

- Traffic disruptions.
- Obstructions.
- Regulation and control measures.
- Capacities.
- Surface conditions.
- Classifications.

DTO personnel coordinate with the operations and intelligence cells (G3, G2, air defense artillery, aviation, chemical fire support element, PM, signal) of the division rear CP for current information on enemy activity such as conventional or chemical strikes on MSRs, bridges, and tunnels that could interrupt movement. Close coordination with the operations cell is necessary to ensure support of current operations, to provide information to plan future operations, and to coordinate movement and maneuver. The movement control cell coordinates with the operations and intelligence cells to do the following:

- Control administrative movements in the division rear area.
- Monitor and manage movement of nondivisional forces through the division rear area.
- Ensure necessary routes are cleared.
- Provide CS resources, including engineer, NBC, and reconnaissance.
- Provide MP support for convoy movements.
- Manage tactical and administrative movements.
- Enforce movement priorities and direct the use of alternative routes to lower priority traffic.

The movement control cell (which consists of the DTO and MCO) does the following:

- Designates MSRs and maintains MSR status (green, amber, and red).
- Reroutes convoys as required.
- Controls division motor transport asset employment and allocates CSS air assets. Controls attached or OPCON nondivisional motor transport or CSS air assets task-organized to the DISCOM. Maintains asset visibility status (MCO).
- Receives movement requests or credits for units in the division and nondivisional units moving in the division area. Tracks convoys from the division rear area to their destination in the division (DTO).
- Requests additional transportation support (DTO, may delegate to MCO as situation dictates).
- Develops alternatives to ensure movements remain constant (DTO/MCO).
- Ensures supplies reach their required locations at the required time.

5-14. MOBILITY WARRANT OFFICER. The Mobility Warrant Officer provides the Army with a sound level of movement control technical and tactical expertise to support all phases of force projection operations. The MWO is a highly specialized expert and trainer for all movement control operations. He will operate, maintain, administer, and manage movement control systems and operations for his entire military career.

5-15. MOVEMENT CONTROL NCO. The FSB movement control NCO provides movement management support to the brigade. The MC NCO is located in the FSB's support operations section. The NCO coordinates Corps and division CULT assets operating in the brigade area. There is close and continuous coordination between the MC NCO and the DISCOM MCO. The MC NCO is the link between the DISCOM MCO and the brigade users of transportation. The

MCO will distribute a copy of the division movement plan to the FSB MC NCO. The MC NCO will ensure the receiving SSA is aware of the shipment's arrival time.

CHAPTER 6

MOVEMENT CONTROL IN THE FORCE PROJECTION PROCESS

6-1. INTRODUCTION. Deployment is the relocation of forces and material to a desired AO. Deployment includes all activities from origin to destination, including CONUS, intertheater, theater legs, staging, and holding areas. This encompasses the following three distinct, but interrelated segments:

- Home station to the POEs (fort to port).
- POEs to the PODs (port to port).
- PODs to the TAA (port to destination).

All segments are interdependent. Therefore, the overall success of deployment relies upon the following:

- Designated Army installations as effective power projection platforms.
- Adequate numbers of flexible strategic lift assets.
- The ability to rapidly throughput and sustain combat power.

If RC units are deploying, then they must complete all necessary requirements for mobilization followed by those common to all deploying units. The mobilization and deployment process depends on the type of unit deploying. See FM 100-17 for detailed information on mobilization and deployment.

To accomplish the mobilization and deployment mission, all services have invested much in infrastructure, strategic lift, and pre-positioned stocks to enhance the possibility for success in the first two segments and part of the third. The supported CINC and deploying commander must also plan for and execute a viable RSO&I plan to ensure success in the final segment of deployment. Force projection platforms and the strategic mobility triad deliver soldiers and material to the AO. The RSO&I process builds combat ready units by using arriving personnel and materiel. The ultimate standard for success for any deployment is whether the CINC's requirements for combat power at a designated location (TAA) are met within his time-line.

6.2 FORCE PROJECTION. The military elements of power projection strategy is force projection. Force projection is the demonstrated ability to alert, mobilize, and rapidly deploy in order to operate effectively worldwide.

6-3. ENTERING THE THEATER. Arrival at a POD represents the transition from the strategic to the operational and tactical levels of war. It is also the normal transfer point, unless otherwise designated, of command authority from the supporting command to supported theater combatant commander. The responsibility of moving the unit and maintaining ITV simultaneously shifts from USTRANSCOM to the theater's senior movements command, MCA, or MCB. The senior movements command continues movement control of the unit to its final prescribed location in the theater.

The Army component commander in this case may be a Corps commander assigned to a joint task force. The Corps MCB will perform the functions identified to the MCA and the COSCOM will perform the functions identified to the TSC in the reception and onward movement process.

6-4. THEATER RECEPTION AND ONWARD MOVEMENTS PROCESS. The reception and onward movement process is different depending on whether the unit deploys with its authorized equipment or deploys to draw pre-positioned material. The reception process for units deploying with their equipment is shown in Figure 6-1.

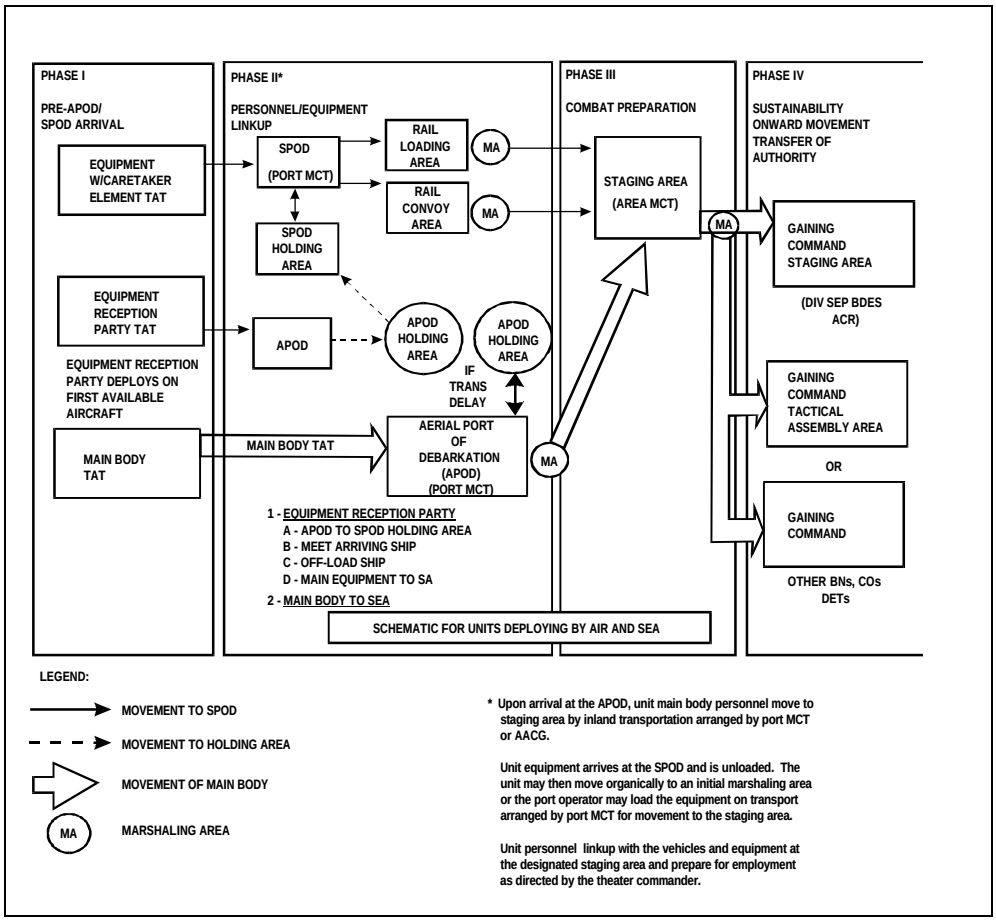

Figure 6-1. Units Deploying with Equipment

Units deploying to draw pre-positioned material take a specified amount of TAT/NAP equipment with them when they deploy. The reception process for units deploying to pre-positioned materiel sites is shown in Figure 6-2.

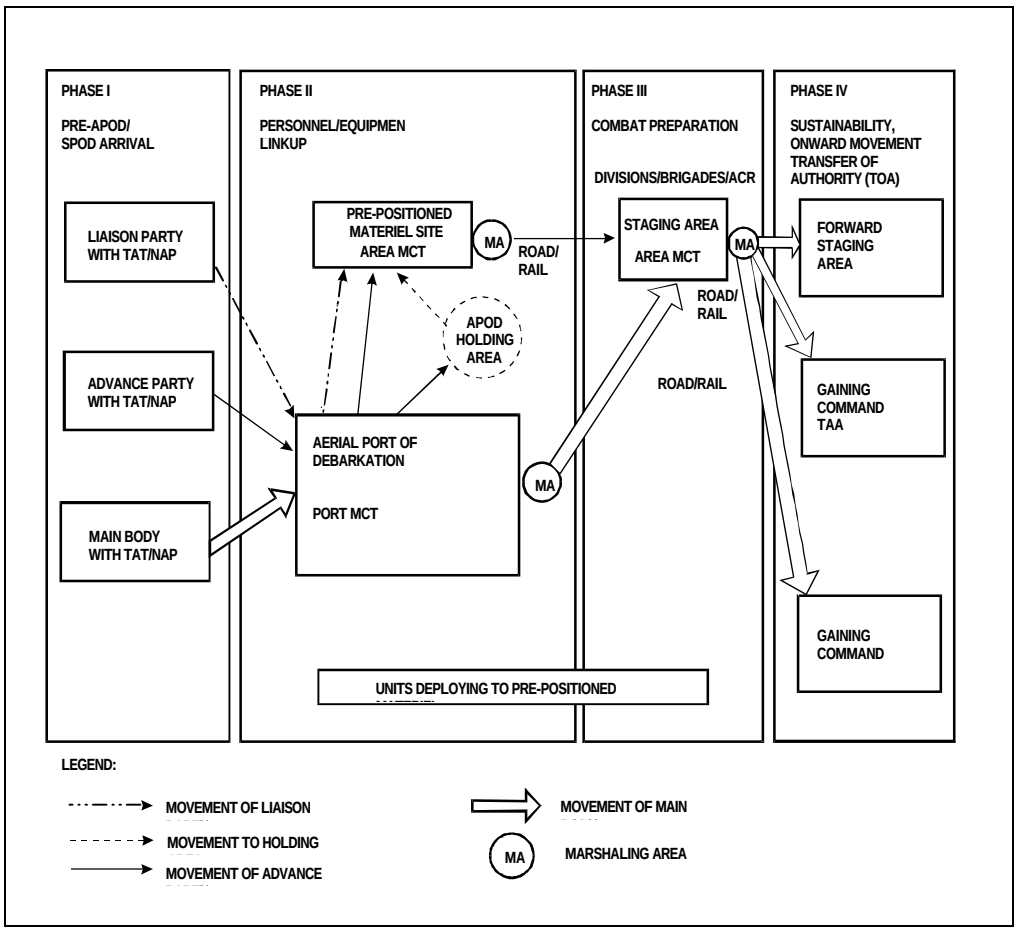

Figure 6-2. Reception Process for Units Deploying to Pre-Positioned Materiel Sites

In a mature theater, the TSC provides all logistical support to units located in or passing through its assigned area. The TSC executes support to the reception and onward movement process through its subordinate ASGs. ASGs are normally assigned a geographical AOR in the COMMZ. They are normally located to take advantage of the transportation network and provide responsive logistical support during the reception and onward movement process.

The MCA plans and coordinates onward movement from the POD through intermediate points to the staging area. These include the following:

- Coordinating transportation and selecting modes for onward movement.
- Providing transportation services and Highway Regulation.
- Coordinating marshaling and holding area requirements with the TSC. Marshaling areas are required when units prepare for movement or change from one mode to another. Holding areas are required for units to conduct inspections, prepare vehicles, or await onward movement in case of delays.
- Providing movement schedules to the TSC so that they can plan logistics support to moving units.

Figure 6-3 shows the primary nodes in the reception and onward movement process that must be supported by movement control units.

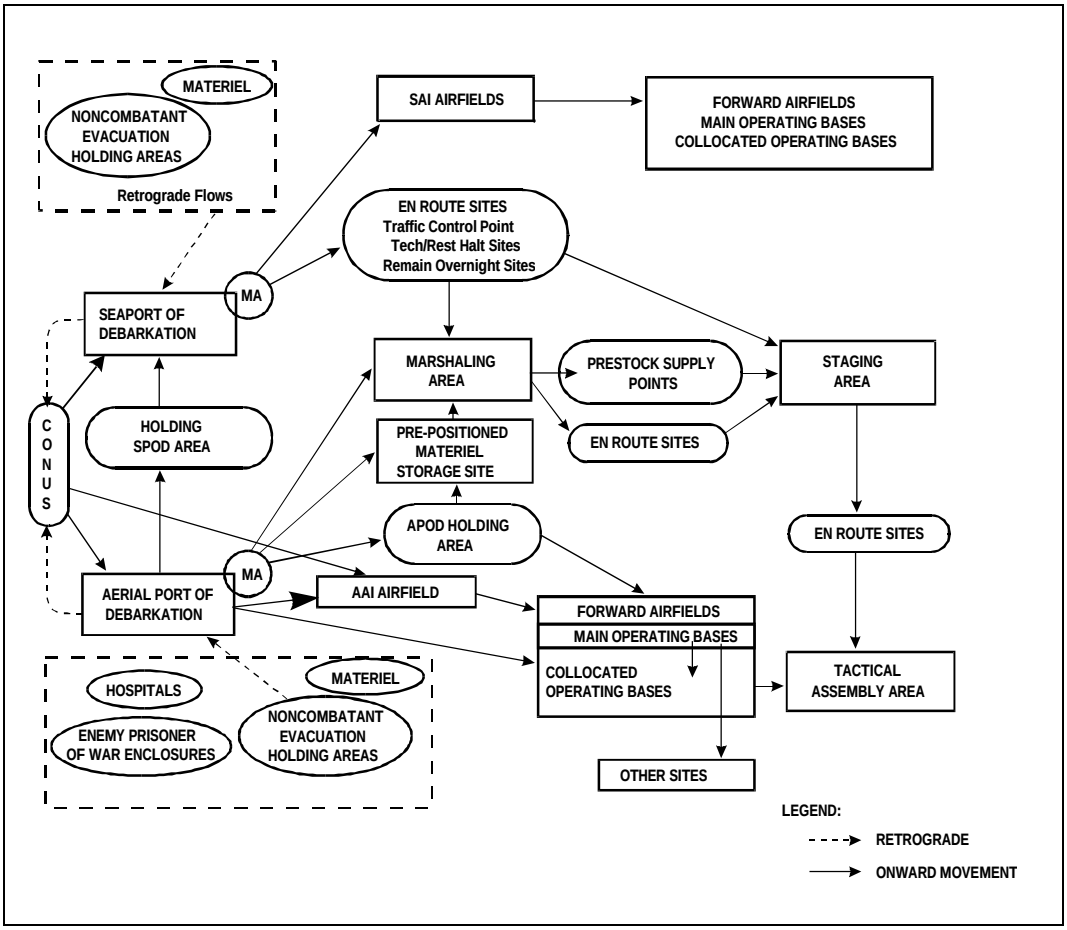

Figure 6-3. Reception and Onward Movement Process Nodes

The MCA and TSC provide ITV of units transiting transportation/logistics nodes or geographic AORs. This information becomes input to the TA DCSOPS to assist in force tracking.

6-5. AERIAL PORT OF DEBARKATION. An APOD is an airfield designated by the theater combatant commander, in coordination with USTRANSCOM, for the sustained air movement of personnel and material or to serve as an authorized port for entrance into or departure from the theater of operations. Port MCTs perform port clearance missions at APODs. The port MCT controls and manages the processing of units and TAT/NAP equipment for onward movement concurrently with other port clearance missions as shown in Figure 6-4.

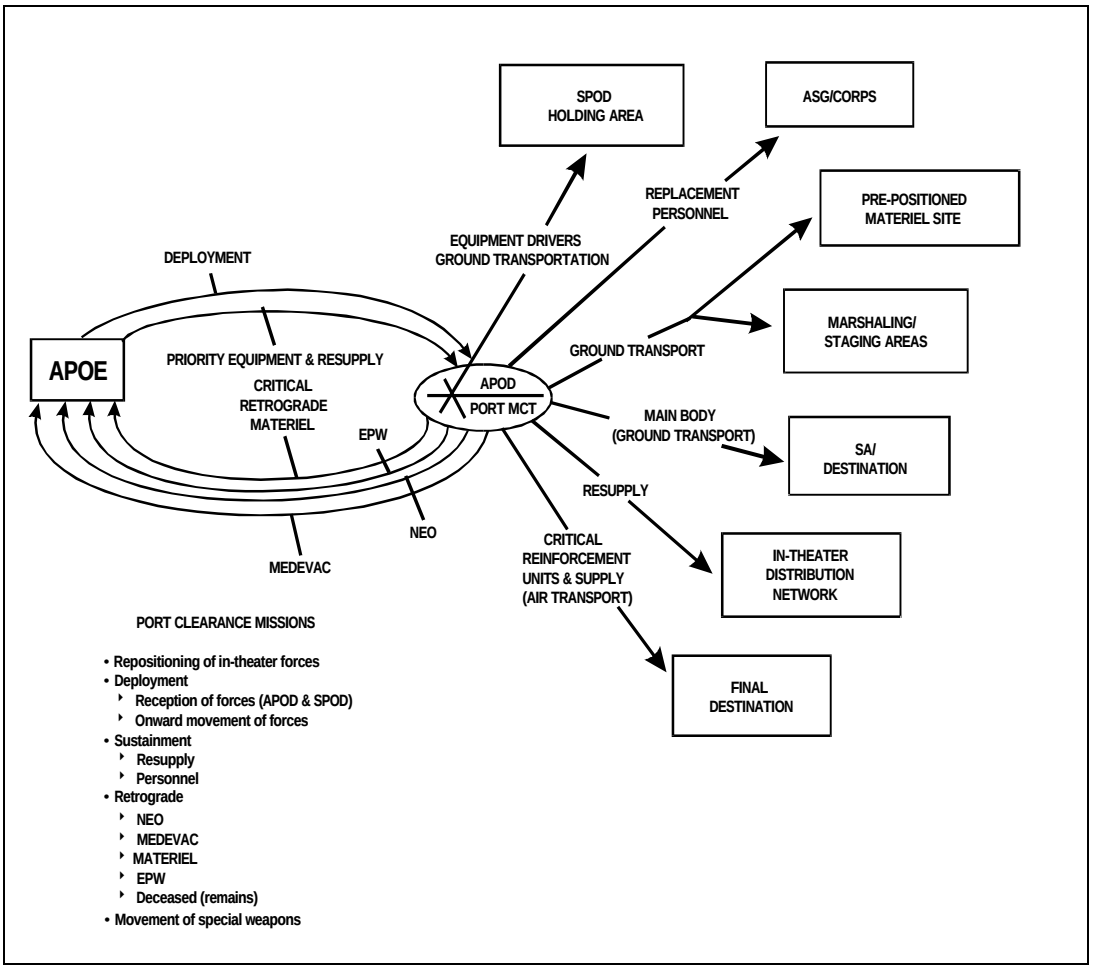

Figure 6-4. APOD Port Clearance Missions

In an underdeveloped theater, an AACG and DACG will initially support an arrival airfield. The AACG should move with the lead elements of the deploying force. The port MCT will work with the AACG to execute port clearance missions. The Cargo Transfer Company has the mission responsibility of operating the AACG (see FM 55-15).

Army elements (port MCT and AACG) at the APOD require external support to perform cargo transport operations (see Table 6-1, page 6-6). This support may be provided by USAF aerial port squadrons at large airfields (established AMC stations) and with AMC TALCE at civilian or smaller contingency airfields (see Figure 6-5, page 6-7).

Table 6-1. Organizations and Functions at an Aerial Port Complex

Organization Or Activity	Parent Organization	Major Functions
Aerial Port Squadron/Mobility Flight	USTRANSCOM (AMC)	Validate aircraft loads, process and document personnel and cargo, and load and service airlift aircraft.
Aeromedical Evacuation Liaison Team	USTRANSCOM (AMC)	Communicate/coordinate aero-medical evacuation requirements between medical facilities and the Global Patient Regulating Center.
Port Movement Control Team	Movement Control Battalion	Assist deploying units with onward movement from port. Resolve problems with frustrated cargo.
ASG Liaison Element	JTSC or TSC	Coordinate ASG support at port.
NEO Liaison Element	Army Component Command	Coordinate all movements of noncombatants.
Aircraft Maintenance Team	Army Component Command	Provide technical assistance to Army aviation units deploying through the Joint Aerial Port Complex.
Postal Operations Terminal	Air or Army Component Command	Process inbound or outbound mail shipments.
Tanker Airlift Control Element	USTRANSCOM (AMC)	Control, coordinate, and monitor US airlift operations.
Port Security	Air Component Command, Army Component Command outside airfield	Provide physical security for the airfield and port complex.
Cargo Transfer Company	Composite Transportation Group	Transloads cargo between transportation modes.

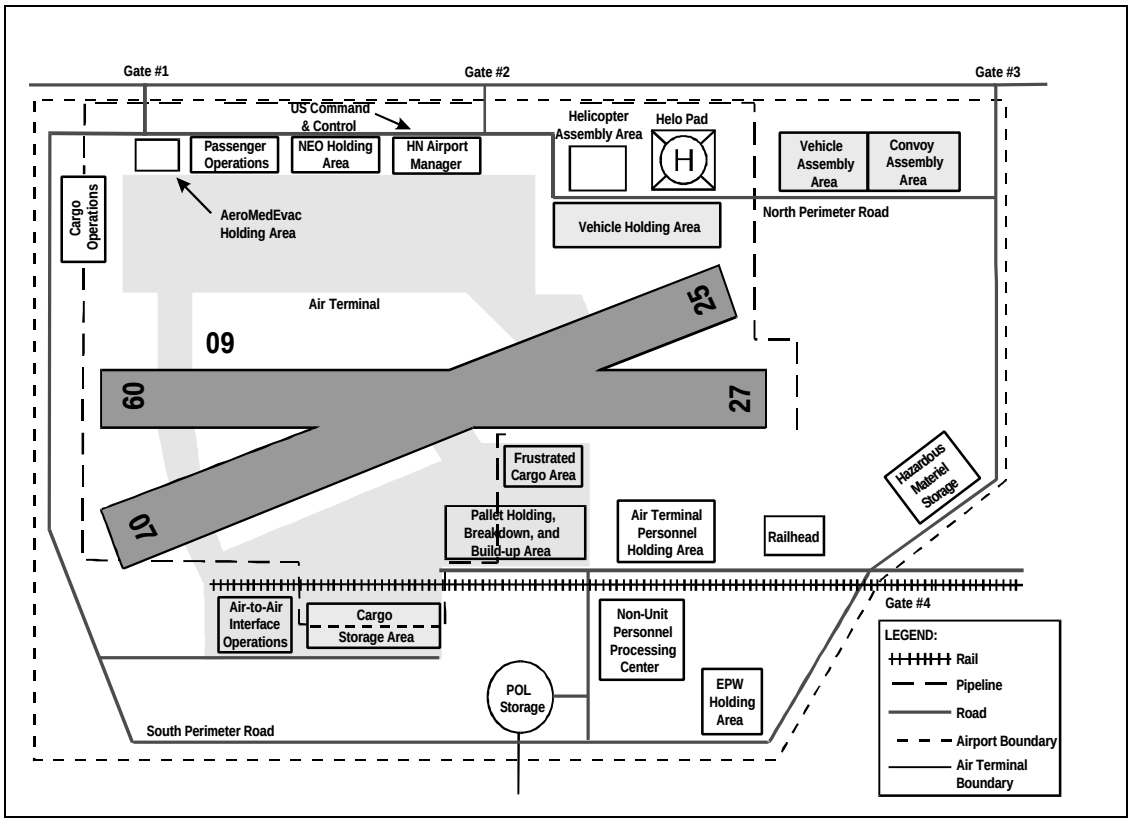

Figure 6-5. Notional Aerial Port Complex

Efficient and timely airfield clearance is critical to prevent congestion and sustain the airflow into the APOD. APOD clearance, processing, and onward movement functions are executed sequentially depending on whether units draw pre-positioned material or deploy with their equipment (Figure 6-6, page 6-8). Port MCTs perform the following:

- Coordinate transportation for the onward movement of passengers and baggage/TAT equipment.
- Brief troop commanders and passengers on the current situation and procedures to clear the APOD.
- Task troop commanders to provide baggage off-load teams and assess the status of weapons and classified material.
- Call forward transportation to meet disembarking passengers and direct passengers to awaiting transportation. Ensure each vehicle is marked with unit and destination.
- Coordinate cargo transfer of accompanying cargo and TAT/NAP baggage pallets and reconfigure them by unit and/or destination for onward movement. Baggage vehicles should accompany troop transportation.
- Coordinate expeditious cargo clearance and retrograde cargo operations concurrently.

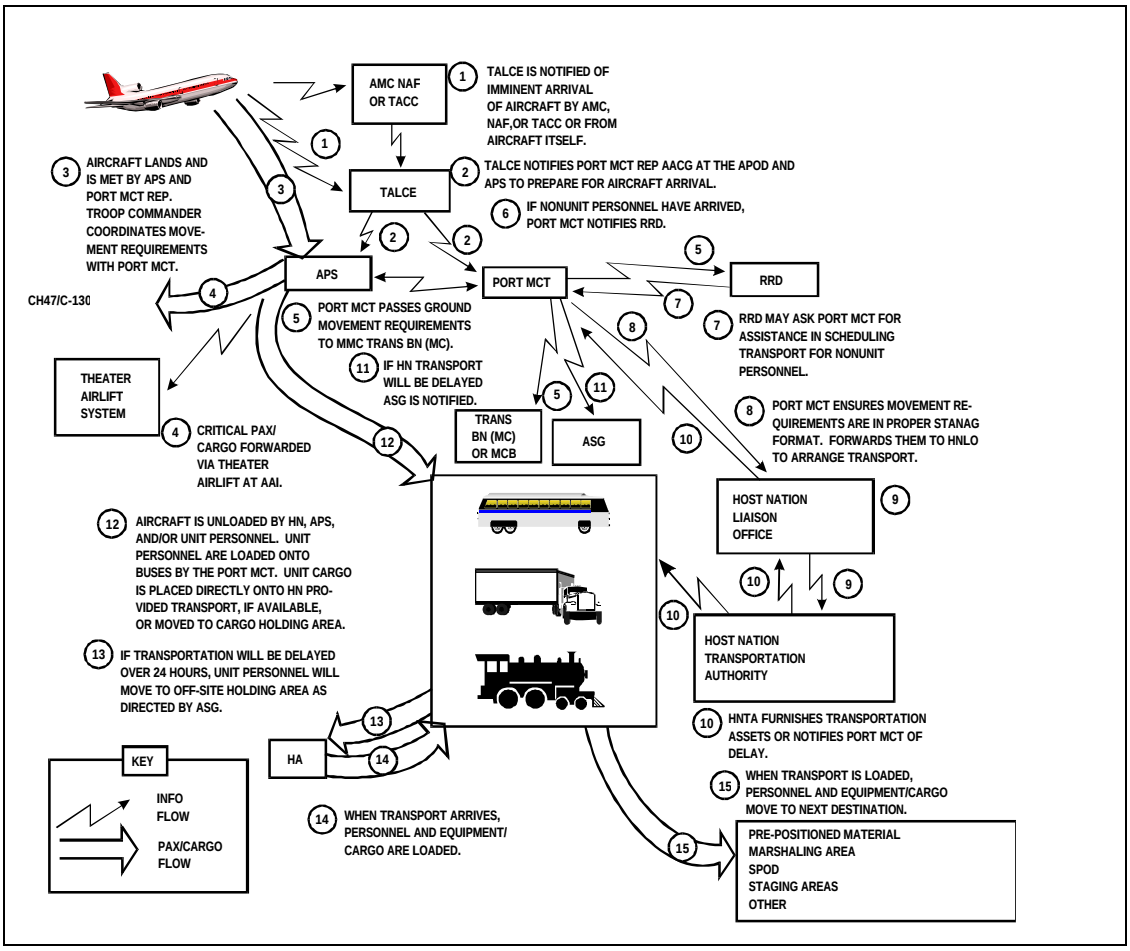

Figure 6-6. APOD Clearance, Processing, and Onward Movement

Port MCTs also plan and coordinate with the TSC ASG for support necessary to operate a passenger holding area when expeditious clearance is not possible due to port congestion or transportation shortages. The PHA may also be used to give more detailed briefings to the moving unit on the current situation, port clearance procedures, or any other mission requirements.

Units may move from the APOD to their SA or TAA in the following ways:

- Directly via surface transportation.
- Via surface transportation after drawing pre-positioned materiel at storage sites.
- Via theater air transportation. This involves transloading from strategic to tactical aircraft.
- To a holding area to await arrival of ships at SPOD. The unit may assist in the ship off-loading.

6-6. AIR-TO-AIR INTERFACE OPERATIONS. At an air-to-air interface site, soldiers and TAT equipment are transloaded from strategic aircraft to tactical aircraft for onward movement. AAI is used when units or reinforcements are critical or when the strategic aircraft is diverted from its original APOD due to the tactical situation, weather, or lack of clearance capability.

AAIs are normally short notice, short duration missions. Port MCTs must plan to quickly respond to AAI requirements at the APOD or contingency airfields. Clearance requirements include reconfiguring, inspecting, and weighing baggage and TAT/NAP equipment, and manifesting passengers for theater movement. The port MCT must coordinate with the Air Force or HN port operator to arrange for MHE and the TSC ASG to establish a PHA.

6-7. SEAPORT OF DEBARKATION. An SPOD is a port designated by the theater combatant commander in coordination with USTRANSCOM. The SPOD is responsible for the sustained movement of equipment and materiel into and out of the theater of operations. The Composite Transportation Group or MTMC will operate the port. The port MCTs coordinate port clearance missions. The port MCTs plan, control, and manage the processing of the units and equipment for onward movement based on the following:

- Advance manifests.
- Available transportation.
- Theater priorities.
- Tactical situation.
- Throughput capability.

The port MCT plans for onward movement based upon ship manifests and discharge rate.

The port MCT is responsible for planning onward movement and must coordinate with the port operator and the PSA, which supports port clearances. Maintenance is a unit responsibility, but the port MCT must provide guidance and movement instructions to units to ensure that vehicles that move by rail or air are only reconfigured or fueled as required or authorized by the mode operator. The port MCT plans and orders railcars for unit rail movement requirements. The unit loads and ties down its equipment. Port MCTs provide technical assistance. Figure 6-7, page 6-10, shows onward movement from the SPOD.

The following additional organizations provide support at the SPOD:

- The Army headquarters responsible for geographic support responsibilities, such as the TSC or COSCOM, provides logistics and life support for units transiting the port.
- The PSA provides maintenance; configures equipment for onward movement; and provides security, fueling, and other support requirements. The PSA is a tailored organization unique to each port. The PSA is under the operational control of the terminal commander.

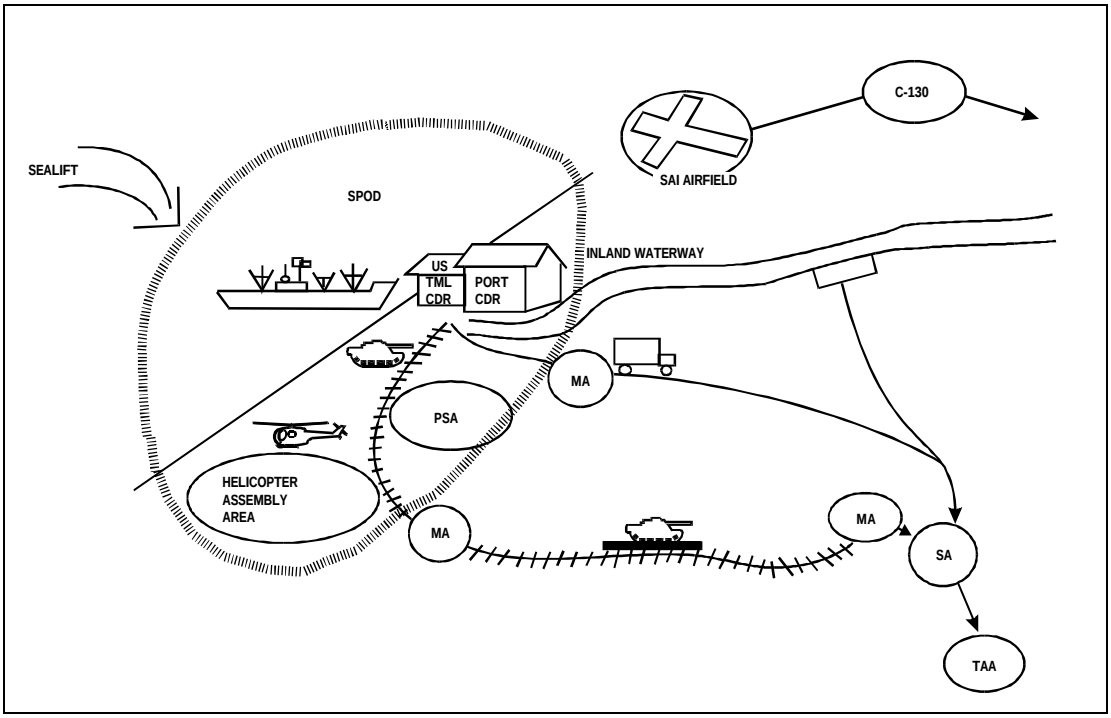

Figure 6-7. SPOD Onward Movement Operations

After clearing the terminal, equipment will be processed for onward movement by specific modes at MAs as follows:

- Rail for movement of outsize, oversize, and track vehicles to their SA/TAA.
- Theater (tactical) airlift from a surface-to-air interface of critically needed units or priority reinforcements to their SA/TAA.
- Surface movement by highway of wheeled vehicles to the SA/TAA, pre-positioned material site, or final destination.
- IWW by lighterage, if available, depending on priority of movement and cargo transfer capability.

Figure 6-8 shows the notional configuration of a water port complex showing some of the functions that are performed in the complex. The figure shows a composite profile of the complex including the surface-to-air interface site.

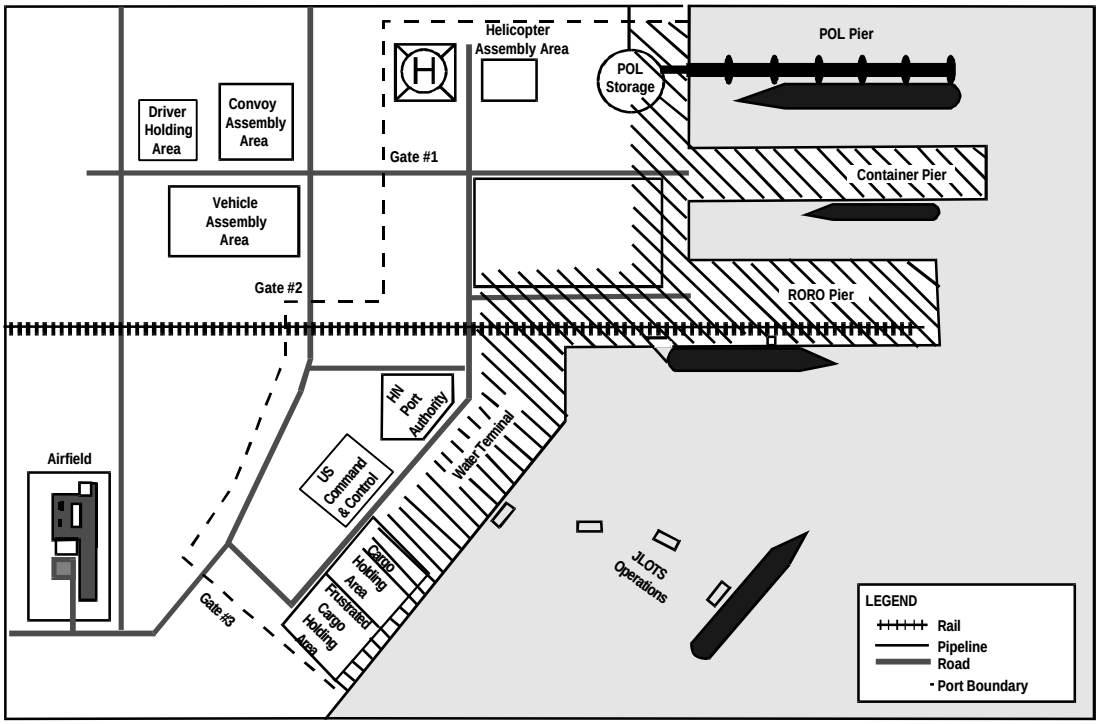

Figure 6-8. Notional SPOD

The MCA or MCB must coordinate APOD and SPOD clearance operations. Units should be moved from the APOD or holding area to the SPOD in the order in which the units are required at the port. The port MCT works with the terminal or port operator to sort the equipment when it is discharged based on priority and mode on onward movement. The port MCT coordinates onward movement requirements and road movement bids, usually at the MA established for movement by that mode. The Port MCT receives requests for line-haul or special transportation requirements, such as HET, and commits TRANSCOM or COSCOM assets.

6-8. SURFACE-TO-AIR INTERFACE OPERATIONS. An alternate method of onward movement from the surface mode for high priority units is the surface-to-air interface. Equipment is separated at the SPOD to begin preparation for air movement. At the surface-to-air interface, equipment, drivers, and a C2 party are processed for onward movement on theater airlift. The MCB normally assigns a port MCT to execute the surface-to-air interface. The port MCT must coordinate with the MCT at the SPOD to ensure that units prepare vehicles and equipment to meet tactical airlift requirements.

The surface-to-air interface is organized similar to a departure airfield. The port MCT requires augmentation to execute the operation as shown in Figure 6-9, page 6-12. This includes portable scales, MHE, dunnage, and shoring.

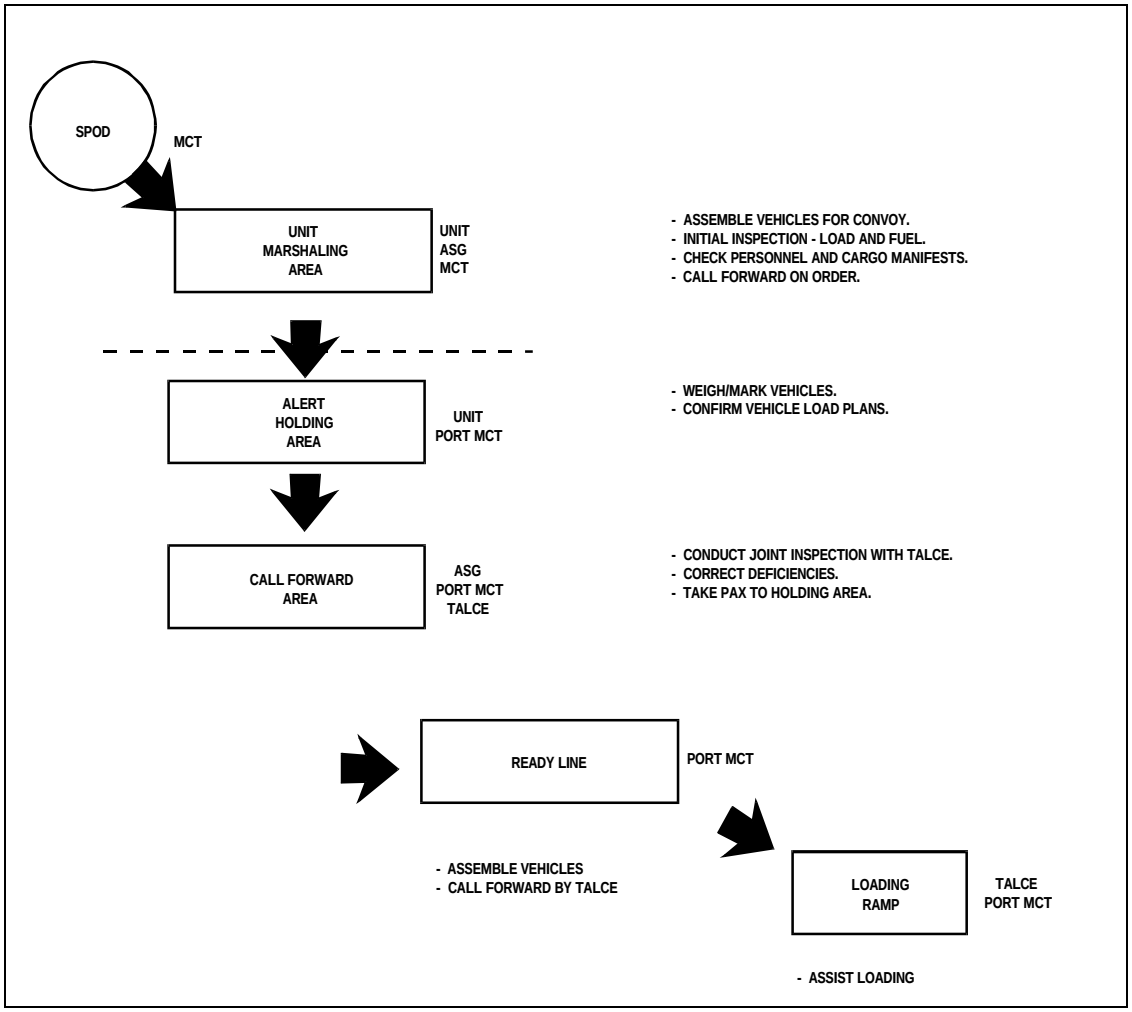

Figure 6-9. Surface-to-Air Operational Stages

6-9. ONWARD MOVEMENT OF PRE-POSITIONED MATERIEL. Pre-positioned materiel includes combat systems, vehicles, and sustainment stocks. Most APS are located at various land-based sites strategically located around the globe. In addition, a brigade set of equipment, to include sustainment and lighterage, is pre-positioned aboard a fleet of ships.

APS reduces the unit equipment and basic load requirement that must accompany units. The MCA and/or Corps MCB must coordinate with the TSC and liaison party from the unit to plan for onward movement from the storage site to the SA. An MCT will directly coordinate with the moving unit at a MA outside the storage site. The unit advance party will draw APS materiel and

linkup with the main body at the SA to complete combat preparations. The MCT will select the plan for any special transportation requirements for unit onward movement from the storage site to the SA.

6-10. MOVEMENT CONTROL DURING REPOSITIONING. The MCA or Corps MCB may be responsible for planning and executing movement control operations in support of unit repositioning during the following:

- Repositioning within the theater of operations.
- Deploying from an OCONUS theater of operations to another theater.
- Redeploying from a theater of operations back to home station.

Movement planners must schedule movements and transportation to support the movement as directed by the DCSOPS or G3. Units are called forward to POEs based on their priority of movement and the processing capacity of the port. Movement planners must make sure people, supplies, and equipment arrive at the transportation node simultaneously based on the estimated processing time at the POE. Units must be at the POE and prepared to load as strategic lift assets become available (Figure 6-10).

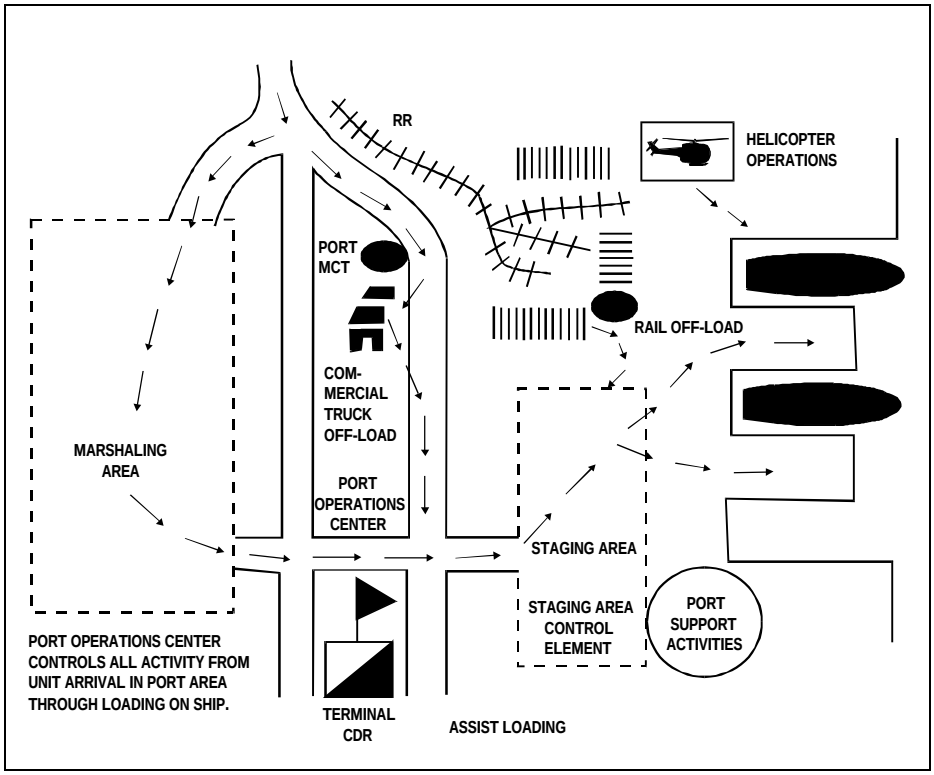

Figure 6-10. Operations at a Notional SPOE

Units are called forward from a holding area to the POE based upon a schedule matching the moving units with specific aircraft or vessels. The service logistical commander responsible for integrating logistical support will provide lift support to units while at the POE. The MCB or subordinate units plan, coordinate, and select the mode of transportation and issue or coordinate movement credits for units to move to the POE. Units must arrive in sufficient time to prepare vehicles and equipment for movement according to instructions provided by the terminal commander. See MTMCTEA Pamphlet 700-2 for sample loading times.

At APOEs, A/DACGs ensure that TAT/NAP cargo and baggage meet the configuration of the scheduled aircraft and any other Air Force requirements. Moving units may also receive customs and agriculture inspections. The port MCT must establish a holding area for personnel and equipment (also known as a sterile holding area) that have been checked and cleared by customs personnel. The port MCT is responsible for maintaining the sterility of the processing center at the call forward area and for manifesting passengers. The port MCT coordinates with MP customs and US Department of Agriculture representatives to ensure that operations at processing and holding areas meet their requirements. Port MCTs must also plan for retrograde of inoperable equipment, captured equipment, and sensitive equipment.

As part of the manifesting procedure, the port MCT should conduct required briefings, check for ID tags, and conduct a roll call. Figure 6-11 displays a notional call forward area processing center, including the flow of passengers from reception to manifesting.

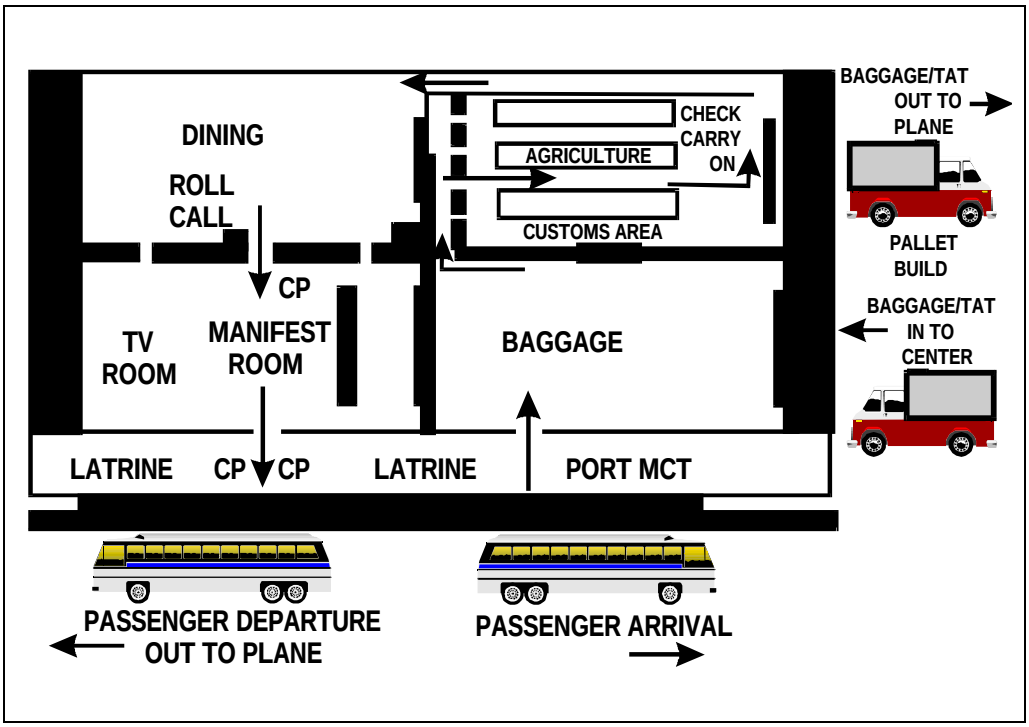

Figure 6-11. Notional APOE Processing Center

6-11. PLANNING SEQUENCE FOR RECEPTION AND ONWARD MOVEMENT. A comprehensive plan for reception and onward movement requires adherence to a step-by-step

process similar to that used to develop a movement program. Planning must estimate the workload at specific transportation nodes to determine requirements for movement control, mode operating, and cargo transfer units. Planning should be done for operational periods for each mode. It must also identify requirements for MHE, CHE, and HNS (Figure 6-12).

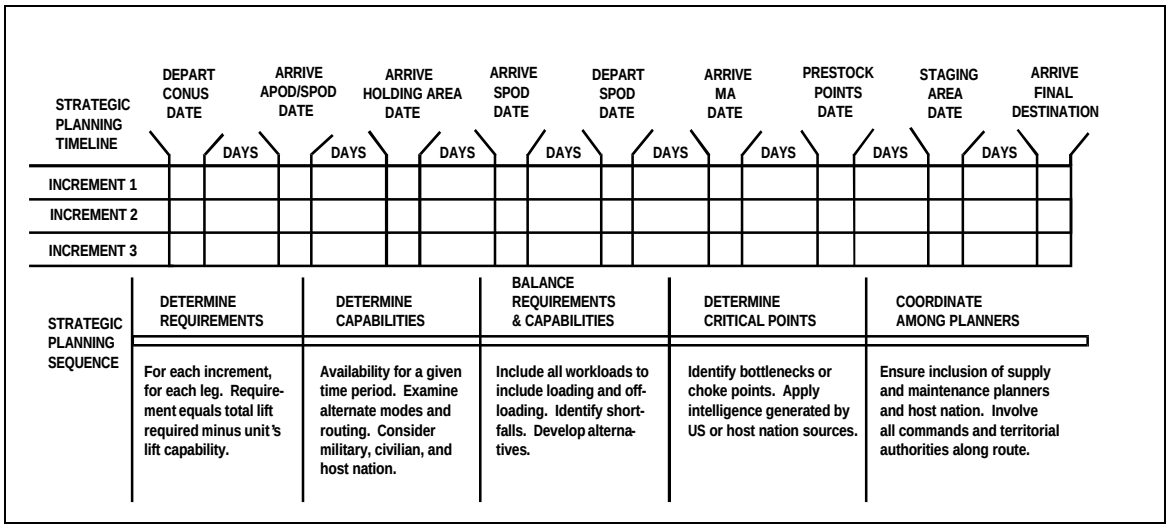

Figure 6-12. Reception and Onward Movement Planning

During this process, movement planners at the senior movement headquarters do the following:

- Obtain advance arrival information for intertheater sea and air movement from port operators and operational planners.
- Assess the movement requirements data such as RDD, priority of movement, equipment characteristics, and special requirements.
- Group the requirements for each POD by destination geographic location in RDD sequence.
- Obtain movement priority for requirements that have the same destination and RDD.
- Determine available modes for onward movement based upon planning requirements. Consider requirements, equipment characteristics, priorities, and modes servicing the PODs and SAs/TAAs.
- Select mode for each requirement.
- Program the mode for each requirement for reporting to POD based upon estimated time for POD clearance. This is dependent on the type of strategic asset (airlift, sealift).
- Determine availability of equipment for follow-on missions at the POD. Estimate uploading and processing time for each mode at the POD. Apply time/distance factors to estimate transit time to other transportation nodes or arrival at the SA/TAA. Determine total transit time, maintenance and crew rest, and return time.

- Resolve conflicts by rerouting, changing modes, or rescheduling or obtain guidance from operational planners. Reconfirm that the selected route can accommodate any oversize or overweight cargo/equipment being moved.
- Identify requirements for MHE and CHE at the POD for each mode, cargo and trailer transfer points, and at destination. Coordinate with the TSC or COSCOM to provide sufficient MHE and CHE to meet the needs at the points and times required.
- Coordinate for holding and storage areas outside of POD SA if ports become congested due to transportation shortages or scheduling problems.
- Identify en route support requirements for fuel, mess, maintenance, and billeting. Coordinate with the TSC and/or COSCOM for this support.
- Determine critical points where highway regulation or traffic control should be established to maintain the flow of traffic. Coordinate for en route communications.

Plan for retrograde missions for equipment returning from the SA/TAA in the same manner as above.

6-12. GENERIC SUPPORTING THEATER LOC NODES. A number of supporting theater LOC nodes are used in RSO&I. To provide a common understanding of the purpose and capabilities of these nodes, brief generic descriptions are provided. The generic descriptions include the following:

- Pre-positioned equipment site.
- Marshaling area.
- Helicopter marshaling area.
- Convoy support center.
- Staging area.

In addition to these supporting nodes, a number of nodes such as railheads, driver holding areas, tactical assembly areas, and final destinations are used for the theater LOC.

Driver holding areas are locations where deploying unit drivers (and arriving supercargoes and drivers assigned to the PSA) are assembled and provided life support while awaiting the arrival of their unit equipment sent by sea. The DHA should be located in close proximity to the joint water terminal. Facilities are normally provided by the host nation. Billeting, messing, local transportation, and other lift support requirements will be arranged for by contracting with commercial sources or provided by the task force assigned to operate the DHA. The task force also will need to marry-up the unit drivers with the unit's equipment and arrange for onward movement through the local MCT. The size of the DHA and its supporting task force will be determined by the timing and efficiency of the deployment flows.

TAAs are designated areas where contact will be established between the deploying major combat formation and the liaison party of the gaining command. The area will provide sufficient space to permit the combat formation and its attached and supporting units to deploy tactically, the commander to transfer authority to the gaining combat commander, and integrate the formation into the ground component force.

Final destinations are locations where units not otherwise assigned to a theater LOC node will deploy to perform their assigned missions. They serve as termination points for deploying units or sustainment packages.

CHAPTER 7

THEATER TRANSPORTATION DISTRIBUTION

Section I. Theater Distribution and Movement Control

7-1. INTRODUCTION. Theater distribution involves a fully integrated distribution management system that uses technology, organizations, doctrine, and procedures to enhance distribution operations. Effective distribution management coordinates the various subelements of the following distribution equation: the transportation elements of movement control, mode operations, and terminal and cargo transfer operations along with materiel management and supply support. Movement control is critical to developing the distribution plan. Establishing movement control interfaces throughout the distribution structure, movement programming, and highway regulation are all critical to ensuring success of the theater distribution plan.

7-2. THEATER DISTRIBUTION PLAN. Developing the theater distribution plan is one of the major tasks of the TSC to support the theater commander's intent and concept of operation. The theater distribution plan fuses transportation and materiel into a holistic system. The plan encompasses RSO&I and sustainment operations. Figure 7-1, page 7-2, provides a schematic of theater distribution planning considerations. The distribution system is a complex of networks, facilities, procedures, arrangements, and units. The unit's responsibility is to receive, store, maintain, issue, and move materiel, personnel, and equipment.

a. Theater Distribution System. The distribution system functions along LOCs that take into account transportation assets, geography of the theater, and the area of operations. Throughput is a function of the transfer capacity of key nodes along the LOC. Nodes are locations where a materiel or unit movement requirement is originated, processed for onward movement, transferred to another transport node, or terminated. Nodes consist of the following:

- Airports.
- River terminals.
- Sea ports and instream offload.
- Railheads.
- SAs.
- TTPs.
- SSAs.
- Storage activities.
- ASPs.

Node and LOC security are essential to an effective distribution plan. The distribution system takes into account the geography of the theater and the area of operations: available road networks and aerial and sea ports. The distribution system functions along several LOCs to support the commander's concept of operation. The distribution system consists of transportation, supply, ammunition, and multifunctional units. Personnel and medical logistics units are not depicted, but they are also part of the distribution system. Nodes depicted for materiel and ammunition movements include the following:

- SPOD.
- APOD.
- SSA.
- TSA.
- ASP.
- DSA.
- BSA.
- CSA.

- hub.

The hub is a distribution terminal where materiel may be shipped to SSAs or other nodes as required. The hub can act as a receiver, temporary storage, distribution, documentation, and redirect center. Materiel may also bypass various nodes or throughput to using units.

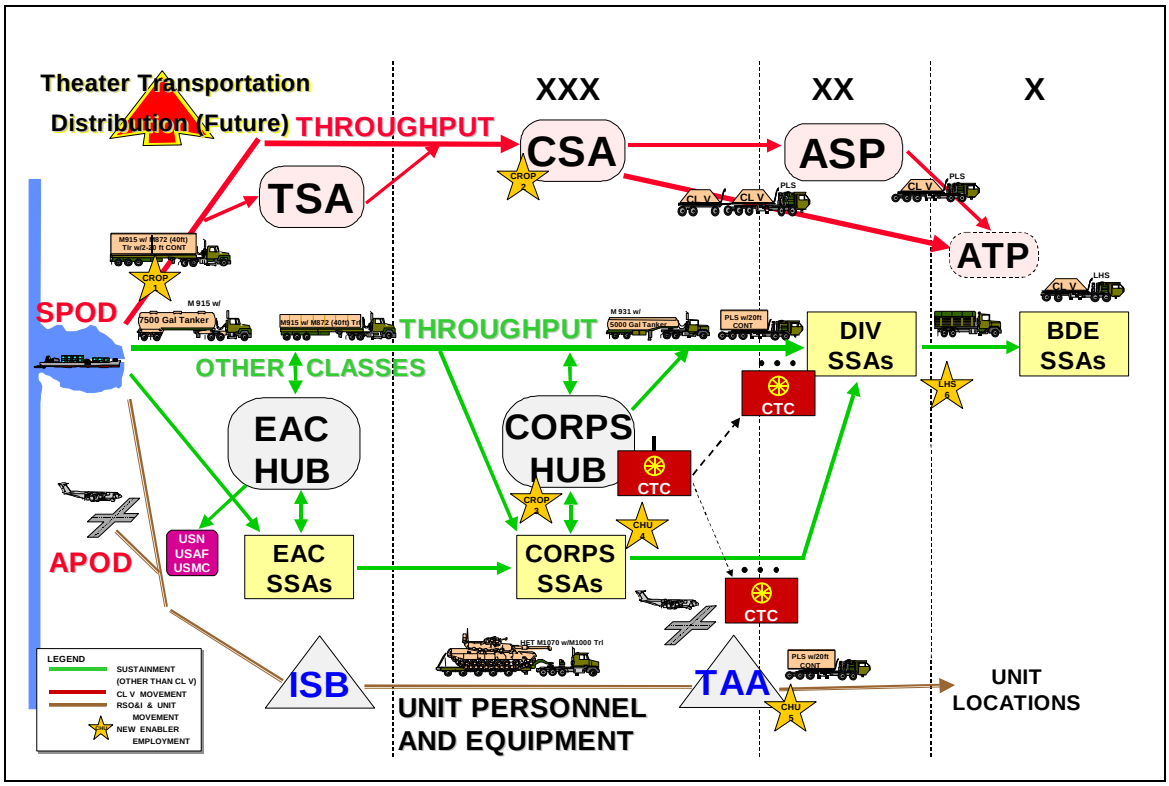

Figure 7-1. Theater Distribution Schematic

b. Movement Control Interface. An effective distribution system requires continuous coordination at every command level. This coordination is between materiel and movement control personnel and organizations.

7-3. MOVEMENT PROGRAM DEVELOPMENT. The movement program is used to preplan both known and anticipated transportation requirements for reception, onward movement, and sustainment. It is a command directive prepared by planners in the MCA, MCB, and MCO. These planners must coordinate with the following:

- ASCC coordinating staff DCSLOG/G4.
- TSC DMC and support operations staff.
- COSCOM DMC and support operations staff.
- MMC.
- DCSOPS.
- Mode operators to plan an integrated transportation system.

During the planning process, movement planners allocate available transportation resources to support requirements based on the commander's priorities.

Implementing the commander's priorities is a responsibility of logisticians at each level of command. The movement program supports the commander's priorities by establishing what requirements can be resourced given available transportation assets, units, and infrastructure. Doing this effectively uses these assets and identifies competing requirements and shortages.

An effective movement program is vital for successful support of combat operations. It also relies heavily on the accuracy of data provided by supported units. Movement planners must be flexible because requirements often change based on changes in priority, unit locations, asset availability, and conditions of the LOCs. Therefore, supporting movement plans should have fully developed alternatives based on likely courses of action. The MCA's movement control battalions and the Corps MCB must also be resourced with sufficient MCTs and communications equipment to provide adequate movement control and operational flexibility.

The movement program serves as an authority to commit transportation assets. It authorizes the MCTs to issue TMRs, directs mode operators to furnish assets, and alerts receiving units to accept programmed shipments so that they can unload transportation assets promptly. There are seven basic steps used to develop a movement program. These steps are as follows:

- *Step One.* Assess the distribution plan.
- *Step Two.* Determine requirements.
- *Step Three.* Determine transportation capabilities.
- *Step Four.* Balance the requirements against the capabilities.
- *Step Five.* Determine shortfalls, critical points, and recommended solutions for handling the shortfalls.
- *Step Six.* Coordinate the program.
- *Step Seven.* Publish and distribute the program (the movement program may be issued in extract form).

7-4. PREPARING THE PORT CLEARANCE PROGRAM. The port clearance program is part of the theater movement program. The MCA begins preparing the port clearance program as soon as it receives advance manifest data from the CONUS ports, terminal units, or other ports of origin. Once the manifest (what is actually on the ship or plane and where stowed) is available, the port MCT does the following:

- Programs actual transportation assets to provide onward transportation, based on anticipated arrival date.
- Activates line numbers and/or programs.

The port MCT coordinates through movement control channels the status of program execution.

The MCA provides input to the terminal port commander if diversion is required. The MCA makes recommendations based on the following:

- Cargo destinations.
- Available port capacities, capabilities, and workload.
- Capacities and projected workload for the various modes and segments of the transportation network.

A close working relationship between the MCA and MMC is required to program and expedite moving nonunit equipment and supplies; especially those shipped in containers.

7-5. ASSESSING THE DISTRIBUTION PLAN. The distribution plan is a complete logistics picture that shows the locations of the entire logistics infrastructure. It is the tool by which planners know where support should normally flow and where it may be diverted as operational needs dictate. The distribution plan constantly evolves as the theater develops. The commander guides the development of the distribution plan. He also develops the concept of operation. The concept of operation consists of supporting the units already in theater and those that are arriving. The distribution plan delineates throughput and internal transportation requirements directly affecting the coordination and preparation of movement programs.

Movement planners use the distribution pattern to develop the transportation network. The network consists of the complete system of routes pertaining to all modes of transportation available in the theater. Movement planners study intelligence and engineer information on the AO to determine the capabilities of transportation networks. They also analyze the enemy situation to determine existing or potential threats to movement. Concurrently, they determine the suitability and feasibility of moving supplies and personnel over those transportation networks. Based on these studies, movement planners recommend locations for transportation units and modes to make full use of the transportation networks.

Movement planners in the MCA/Corps MCB coordinate with the TSC/COSCOM regarding the positioning of transportation units and supply activities. These units are positioned so that their capabilities will enhance the distribution system.

Movement planners also coordinate with shippers and receivers to determine their capability to receive, handle, and load by various transportation modes. This capability is based on the availability of MHE, CHE, ramps, labor, storage capacity, and other factors that affect transportation services. This information is necessary to efficiently schedule transportation and prevent congestion.

An effective movement program is vital for successful support of combat operations. Therefore, supported units must provide accurate data when developing transportation requirements and inform movement planners of current and projected operating sites.

7-6. DETERMINING REQUIREMENTS. Having accurate requirements is the key to developing an effective movement program. Forecasts must be submitted far enough in advance for the transportation and supply systems to adjust their resources to carry out the program.

Movement planners use planning periods for forecasting requirements. The length of these periods is based upon the number and rapid changes experienced or anticipated. The availability of an integrated information system that integrates movement and supply information increases the accuracy of forecasts. It also allows for more accurate movement programming.

Materiel movement requirements are developed and grouped in terms of classes of supply, estimated weight and cube, RDD, origin, and destination. Special handling requirements such as refrigerated cargo, hazardous cargo, and controlled/sensitive cargo should also be identified.

Major subordinate commands must provide their movement requirements that exceed organic transportation capability for inclusion in the movement program. Personnel movement estimates are grouped by category such as troops, civilians, patients, prisoners of war, and so on.

7-7. DETERMINING CAPABILITIES. Movement planners at each command level determine the capabilities of the transportation mode operators in their AO. They obtain from mode operators the characteristics and capabilities of the following:

- Number of transportation units and their equipment available to support common-user movement requirements.
- Total number of HN transportation assets allocated to support common-user movement requirements (include rail, inland waterways, and coastal shipping if available and feasible).
- Number of third country and US-contracted assets.
- Reception, material handling, and in-transit storage capabilities.
- Communication capabilities (MCT to MCT, MCT to customer, and so forth).

Theater airlift and airdrop may be planned for if the JTB or JMC apportions assets for logistics air movement operations to the theater. The TSC will allocate apportioned airlift based on command priorities. Movement planners should realize that requirements normally exceed allocated airlift. They should also take advantage of opportune lift. Movement planners must also update capabilities with changes as they occur and adjust movement programs accordingly.

When developing motor transport capabilities, planners must use planning factors or experience based on the type of equipment, availability of MHE and CHE, weather, and terrain. Planners should obtain planning factors from mode operators or from FM 55-15.

7-8. BALANCING REQUIREMENTS AGAINST CAPABILITIES. Balancing requirements against capabilities determines whether the available mode assets will support movement requirements. As a result of this step, movement planners determine the workload for each mode and segment of the transportation network. They should not limit this process to simply programming the use of available transportation capability. Planners must also consider command relationships and geographic AOR.

Movement planners must assign requirements against all capabilities in a logical manner. They must not only consider the capabilities but also the total transportation network, the tactical situation, the priority of movement, and the risk of failure. For example, if a critical shipment must move into an area that is accessible by multiple road routes, but only one rail route, it would be wise to program the movement by motor transport. The rail segment could make less critical movements. Planners must consider the following workload requirements:

- Direct shipments.
- Multistops.
- Retrograde.
- Intermodal shipments.

If planners identify transportation shortfalls, they will plan movement according to command priorities and the transportation priority of the shipment. The remainder will be adjusted and these adjustments will be coordinated with the shipper, receiver, materiel managers, and logistics staffs.

7-9. DETERMINING CRITICAL POINTS. Movement planners must identify critical points where restrictions could slow down or stop movement. Critical points include the following:

- Facilities.
- Terminals.
- Ports.
- Railheads.
- Bridges.
- Tunnels.
- Congested highways.
- Cargo transfer points.

Congested critical points will limit the efficiency and effectiveness of the entire transportation network.

After identifying the critical points, planners determine alternative plans or control measures that could reduce or eliminate the risk of congestion. The MCB will place movement regulating teams on the ground where the problems are expected so they can respond before delays congest the system. They should also coordinate with the engineer, MP, and air defense artillery support where necessary.

7-10. SCHEMATICS PROGRAMMING. Schematics may be used to assist movement planners when balancing requirements and capabilities. Their purpose is to graphically portray total shipping requirements and available transportation capabilities as they relate to the distribution plan. Planners use two types of schematics (requirements and mode).

a. Requirements Schematic. Prepare a requirements schematic as shown in Figure 7-2. Prepare the schematic as follows:

- Draw and circle origin and destination points obtained from movement requirement forecasts.

- Connect each point with lines and arrows showing direction of movement.
- List the daily shipping requirements between each origin and destination point. The requirements list the classes of supply, the tonnage, and the movement program line number.

b. Mode Schematic. Prepare a mode schematic (see Figure 7-3, page 7-8) for each available mode. Prepare the schematic as follows:

- Draw mode origin and destination nodes and connect with lines. Connect the lines whether or not the current program requires movement on a segment.
- Note the mode capacity on the outside of the lines. Mode capacity can be expressed as follows:
  - Rail and air as total daily tonnage capacity between major terminals.
  - Motor transport as the daily ton-mile capacity in a particular area or as segments of a line-haul operation.

- Select and allocate a mode for each shipping requirement (program line item). Consider the capability for the largest requirements moving the longest distance.
- Evaluate movement priorities and shipment characteristics based on the full capability of each mode.
- Assign program line numbers to each mode and list them between the nodes as class of supply, tonnage, and the movement program line number.

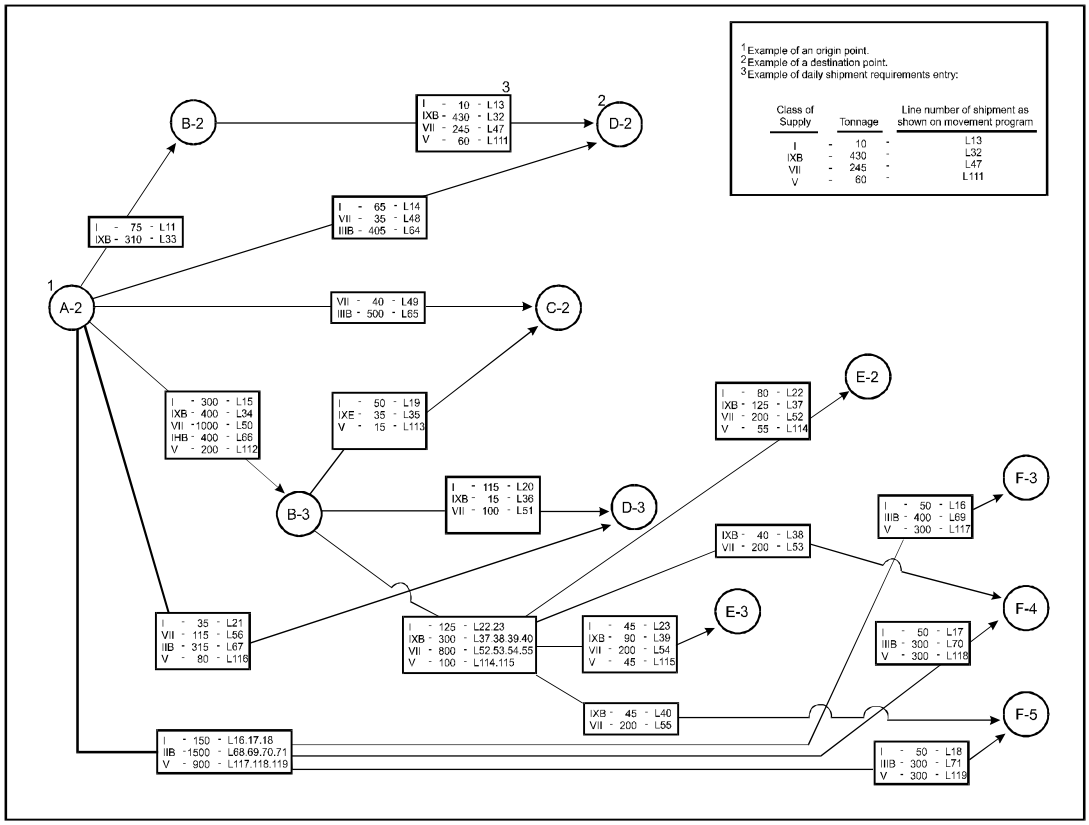

Figure 7-2. Requirements Schematic

Included in the movement program is a MSR checkpoint list (Figure 7-4). It provides ready reference data about the MSR network such as checkpoints, link numbers, feeder routes into the MSR, and distances. Movement control personnel and customers can use this information to identify what path to use from origin to destination and to identify segment numbers for use in requesting movement bids and receiving movement credits.

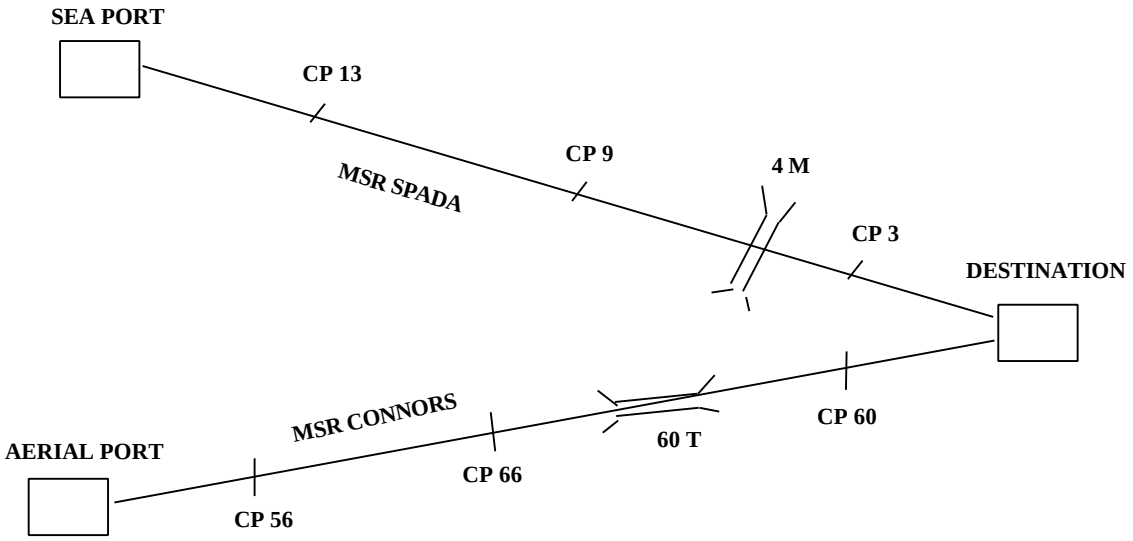

MSR SPADA	E/W ROUTE – 41.5 KM					DAILY HWY TONNAGE (STONS)	DAILY 5-TON TRUCK CAPACITY	HOURLY 5-TON TRUCK CAPACITY
CHECKPOINTS	DISTANCE	LOCAL HWY	ROAD TYPE	SURFACE TYPE	REDUCTIONS			
SEA PORT – CP 13	15.2 KM	37	1	BITUMINOUS	N/A	27,000	4,500	188
CP 13-CP 9								
	13.1 KM	37	3	GRAVEL	N/A	6,090	1,050	42
	4.0 KM	37	1	BITUMINOUS	N/A	27,000	4,500	188
CP 9-CP 3	3.6 KM	37	0	CONCRETE	BRIDGE – 4 KM	36,000	6,000	250
MSR CONNORS	E/W ROUTE – 41 KM							
CHECKPOINTS								
AERIAL PORT – CP 56								
	2.5 KM	42	2	BITUMINOUS	NARROW – 25%	20,250	3,375	141
	11.0 KM	42	1	BITUMINOUS	HILLS/CURVES 30%	18,900	3,150	131
CP 56-CP 66								
	7.0 KM	42	3	GRAVEL	MOUNTAINS 80%	588	98	4
	3.0 KM	42	1	BITUMINOUS	HILLS/CURVES 10%	24,300	4,050	169
	7.0 KM	42	5	DIRT	HILLS/CURVES 60%	1,176	196	8
CP 66-CP 60								
	5.0 KM	42	4	GRAVEL	HILLS/CURVES 30%	4,263	710	30
	5.5 KM	42	0	CONCRETE	BRIDGE 60T	588	98	5

LEGEND: ROAD TYPE/SURFACE TYPE
0 - SUPER HIGHWAY-CONCRETE
1 - 4-LANE HARD SURFACE-BITUMINOUS
2 - 2-LANE HARD SURFACE-BITUMINOUS
3 - 4-LANE LOOSE SURFACE-GRAVEL/ALL WEATHER
4 - 2-LANE LOOSE SURFACE-GRAVEL/ALL WEATHER
5 - TRAIL-DIRT ROAD

Figure 7-3. Mode Schematic (Highway)

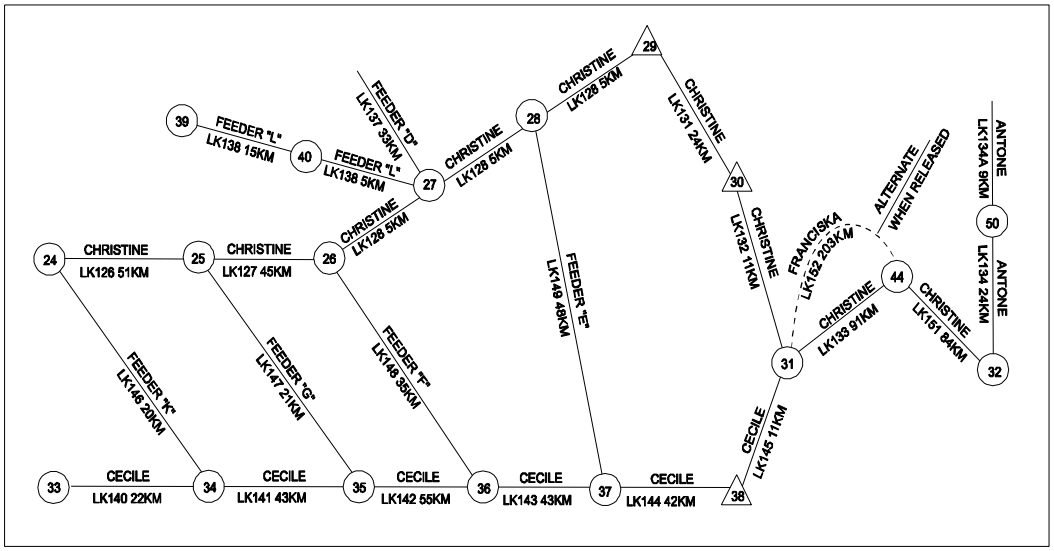

Figure 7-4. MSR Checkpoint List

7-11. SELECTING A MODE. Movement planners use the following basic guidelines to allocate the mode of transport.

- Provide service according to command and transportation priority. Other factors such as shipment characteristics, security requirements, and political considerations are also evaluated.
- Whenever possible, reduce or eliminate cargo rehandling, avoid crosshauls, and plan for backhauls.
- Allocate all available transport equipment necessary to fulfill known requirements.
- Use the most efficient mode for the complete movement or as far forward as possible (see Table 7-1).

Table 7-1. Mode Selection Guide

ORDER OF ECONOMY	MOST EFFECTIVE USE	CAPABILITIES	LIMITATIONS
Pack animals and human bearers	Supplementary mode to extend surface transportation net over terrain impassable to other modes.	All tactical terrain, all weather conditions. Pack animals can transport about 250 pounds per pack animal. Human bearer can transport about 80 pounds subject to pack configuration.	Most inefficient means when terrain is trafficable to other surface modes. Human bearers most wasteful of human resource.

Table 7-1. Mode Selection Guide (continued)

ORDER OF ECONOMY	MOST EFFECTIVE USE	CAPABILITIES	LIMITATIONS
Pipeline	Primary mode for bulk liquids and solids suspended in liquid.	All weather conditions; few terrain restrictions; most economical and reliable mode for bulk liquids; relatively few personnel required for operation and maintenance.	Flexibility limited by immobile facilities: vulnerable to sabotage and enemy action; large construction tonnages required.
Water	Primary over-ocean mode. Inland surface mode for moving large quantities of cargo.	All weather conditions; any commodity; most economical overall long-distance carrier; particularly useful for relieving other modes to more suitable employment.	Relatively slow; flexibility limited by adequacy of waterways, facilities, and channels; vulnerable to enemy action and difficult to restore. Inland waterways are also subject to flooding and freezing.
Rail	Primary inland mode for sustained flow of large quantities of traffic over long distances.	All weather conditions; any commodity; most economical continuous line-haul operations; greatest sustained ton-mile capability; variety of specialized equipment and services.	Flexibility limited by fixed routes; rail-line clearances restrict outsize movements; capability limited by availability of tractive power; rail line highly vulnerable to enemy action.
Motor transport	Supplementary mode for making possible an integrated transportation system. Effective in scheduled line-haul operations by the trailer-relay system: primary mode for distribution operations and logistical support operations in a CZ.	Most flexible mode over trafficable terrain; practically all weather conditions (terrain factor important); increases flexibility of other modes; can transport nearly any commodity with a variety of specialized equipment for both on- and off-road movement.	Over-the-road operations affected by route interference and obstacles created by weather, terrain, or enemy action; sustained line-haul operations over long distances; uneconomical in terms of ton-mile output versus expenditure of manpower and equipment.

Table 7-1. Mode Selection Guide (continued)

ORDER OF ECONOMY	MOST EFFECTIVE USE	CAPABILITIES	LIMITATIONS
Army Air (Helicopter)	The most costly Army mode for the movement of supplies. Becomes the primary mode of transport when all others are ineffective because of limitations or physical restrictions. Used to move only those high-priority items and critically needed supplies as determined by mode managers.	All terrain. Effective over short distances (less than 40 km for external loads). Helicopter can use unimproved PZ and LZ during external lift operations. Capable of lifting nearly any load that can be safely rigged and that is within the weight limitations of the helicopter. CH47 helicopters are capable of using Air Force 463L pallets and standard NATO warehouse pallets when they are equipped with the helicopter internal cargo handling system.	Operational capabilities limited by weather. Restricted flights in snow conditions and thunderstorms. Freezing levels above surface may limit capabilities. Aircraft capabilities limited by cargo load weight, cargo hook limits, or cargo door sizes. Aircraft availability may be affected by flying hour program or crew rest requirements. Internal cargo loading may require MHE.
Air: Army Air Force	Complementary mode for expediting movement of mission-essential traffic; primary or major supplementary mode when terrain reduces effectiveness of surface modes; scheduled operation is most economical method of employment and produces greatest sustained ton-mile capability.	Greatest potential speed of delivery; most flexible with respect to terrain obstacles; economically more favorable (when these factors are combined with substantial lift capability and air transport over long distances). Capabilities are: heavy drop, container delivery system, low altitude parachute extraction system, air land, adverse weather aerial delivery system, and aerial bulk fuel delivery system.	Operational capabilities and effectiveness limited by climate and trafficability of takeoff and landing areas; high ton-mile operating costs.

7-12. COORDINATING. The movement program must be coordinated with movement planners and distribution managers at each command level during its development and also afterwards to ensure integrated planning and coordinated execution. It also requires coordination with operations, supply, MP, engineer, and air staffs so that each one knows its responsibilities during execution.

Movement control organizations distribute the completed movement program to each command level for comment and concurrence. During this phase, the program is used to facilitate planning and to show the evolving distribution plan and projected transportation activity. However, it does not authorize shipments to take place. It becomes a directive once it is approved by the DCSLOG or G4.

7-13. FORMATTING A MOVEMENT PROGRAM. During the planning process, planners assign each movement requirement a movement program line number. This line number is used to identify the requirement and provide additional information throughout the development of the movement program. Figure 7-5 is a sample of a movement program for passenger movement. Figure 7-6 is a sample of a movement program for a cargo movement. The movement program planning process can also be used to identify and plan for the expected arrival of units into the theater. Information in the format includes the following:

- Program line number.
- Class of supply, subclass, and commodity code (MILSTAMP).
- Estimated weight (short tons and cube).
- Nomenclature.
- Origin and destination by UIC/DODAAC and map coordinates.
- Transportation priority, selected mode, and RDD by Julian date. (Designate the type of container with the mode code if required.)

When programming personnel, list them as troops, patients, civilians, or enemy prisoners of war.

MCT: _____

MOVEMENT PROGRAM - PERSONNEL

PLANNING PERIOD: 226-23
EFFECTIVE DATE: 226-23

MVMT PRG LINE NO	SUPPLY CLASS	ORIGIN	LOCATION	DEST	LOCATION	DEST MCT	CTR TYPE	PIECES	STON	CUBE	TP	RDD	MODE
P0001	PATIENTS	AMS	FT230907	AK4PUC	FT220930	793RD	/	000400	000028	4000.0	2	226	A
P0002	PATIENTS	AMS	FT230970	AK4PUG	FT220930	793RD	/	000400	000028	4000.0	2	226	A
P0003	PATIENTS	AMS	FT230970	AK4PUL	FT220930	793RD	/	000400	000028	4000.0	2	226	A
P0004	TROOPS	BRU	FS043390	AK4PVJ	FS040340	27AD DTO	/	000400	000048	4000.0	2	226	H
P0005	TROOPS	BRU	FS043390	AK4PVN	FS040430	27AD DTO	/	000400	000048	4000.0	2	226	H
P0006	EPW	AK4P UC	FT220930	WK4PKU	MC782766	536TH	/	000300	000038	4000.0	2	227	H
P0007	EPW	AK4P UG	FT220930	WK4PRU	MC684610	536TH	/	000300	0000378	4000.0	2	227	H
P0008	EPW	AK4P VJ	FS040340	WK4PJU	MC760336	429TH	/	000400	000048	4000.0	2	227	H

Figure 7-5. Sample Movement Plan (Personnel)

MCT: _____

MOVEMENT PROGRAM - CARGO

PLANNING PERIOD: 230-224
EFFECTIVE DATE: 230-237

MVMT PRG LINE NO	SUPPLY CLASS	ORIGIN	LOCATION	DEST	LOCATION	DEST MCT	CTR TYPE	PIECES	STON	CUBE	TP	RDD	MODE
51000	1	JG2	FU330044	AK4SQC	FR282922	793RD	/	028905	000246	52029.0	2	232	H
51001	5	JG9	ET400000	AK4RJA	LC979250	793RD	20/40	006964	003995	161422.0	3	232	H
51002	5	JG5	ET770599	AK4RJB	LC914722	793RD	20/40	006292	003614	149284.9	3	232	H
51003	5	JH1	ES160875	AK4RKA	LC410321	27AD DTO	20/40	006292	003614	149284.9	3	232	A
51004	5	JG9	ET400000	AK4RKB	LC124262	27AD DTO	20/40	005964	003580	154622.0	3	232	H
51005	8	JG1	ET995488	WK4NEC	MC520537	536TH	/	\155696	000105	18621.0	2	232	R
51006	5	JG9	ET400000	WK4RCA	MC685976	536TH	20/40	002119	001155	50533.7	3	232	R
51007	5	JG6	ET770599	WK4RCD	MC441610	429TH	20/40	002156	001271	52855.0	3	232	R
51008	5	JG9	ET400000	WK4REA	MC612223	793RD	20/40	002195	001251	52428.7	3	232	R
51009	1	WK4SJC	MC736245	WK4SAY	NC078547	793RD	/	004983	000042	8969.4	3	232	H
51010	1	WK4SHD	MC708466	WK4SBY	NC018317	793RD	/	004986	000042	8974.8	3	232	A

Figure 7-6. Sample Movement Plan (Cargo)

The remarks column should be used to identify characteristics for items requiring special handling. For example, the remarks column could include the dimensions of outsize/overweight equipment. Other examples include items requiring special handling such as controlled temperature, controlled environment, hazardous cargo, or cargo security.

The MCA compiles activity address files for units in the theater (Table 7-2, page 7-14). These files list in-the-clear unit locations and points of contact. Therefore, these files must be designated as classified documents and must be safeguarded. The MCA provides a copy of each file to subordinate movement control units. These subordinate units also compile activity address files for units in their geographical area and update the MCA's master file. The MCTs and MCO will accept transportation requests from those units located in their geographic AOR and also update their customer list.

The movement program planning format may also be used to develop individual movement plans. Movement plans are initial developmental stages of a movement program that support specific OPLANs. As such, these movement programs are only plans until they are executed.

Table 7-2. Sample Transportation Customer Alphabetical List

CUSTOMER LIST (ALPHABETICAL LISTING)				
AAC	**NOMENCLATURE**	**GRID COORD**	**UIC**	**MCT**
WK4CFC	C CO 704 SIG BN AREA	NV228645	WCFCAA	793RD MCT
WK4CFD	D CO 704 SIG BN AREA	NV086625	WCFDAA	793RD MCT
WK4CFE	HHC 704 SIG BN AREA	NV399791	WCFUAA	793RD MCT
WK4CGA	A CO 705 SIG BN AREA	NV279958	WCGAAA	792ND MCT
WK4CGB	B CO 705 SIG BN AREA	NV270869	WCGBAA	792ND MCT
WK4CGC	C CO 705 SIG BN AREA	MV997883	WCGCAA	792ND MCT
WK4CGD	D CO 705 SIG BN AREA	MV982803	WCGDAA	792ND MCT
WK4CGU	HHC 705 SIG BN AREA	NV270869	WCGUAA	792ND MCT
WK4CHA	A CO 706 SIG BN AREA	NA995238	WCHAAA	791ST MCT
WK4CHB	B CO 706 SIG BN AREA	NA007067	WCHBAA	791ST MCT
WK4CHC	C CO 706 SIG BN AREA	MA859181	WCHCAA	791ST MCT
WK4CHD	D CO 706 SIG BN AREA	MV863984	WCHDAA	791ST MCT

7-14. EXECUTING THE MOVEMENT PROGRAM. To activate a movement program line number, the shipper contacts its servicing MCT or MCO and requests its line number to be activated. The MCT or MCO verifies that the program data is still valid by coordinating with the shipper. The MCT or MCO will coordinate with the receiver if positive inbound clearance is required. If command priorities change during the current program cycle and these priority changes affect program execution, movement planners will coordinate with affected shippers and receivers. Shippers or receivers should immediately contact their servicing MCT or MCO when there is a change in requirements, capabilities, or locations.

Section II. Highway Regulation Procedures

7-15. HIGHWAY REGULATION PLANNING, ROUTING, SCHEDULING, AND MANAGING. Highway Regulation consists of planning, routing, scheduling, and managing the use of highways to facilitate movements. It provides order, prevents congestion, and enforces movement priorities. The extent of regulation and control required depends upon the

number of planned or anticipated movements and the capacity of the road networks. Highway Regulation requires coordination with unit movement and maneuver.

Highway Regulation is the responsibility of commanders having area jurisdiction. The Highway Regulation mission is performed by the following:

- MCA and MCB in the COMMZ.
- MCB in the Corps rear area.
- DTO in the division rear area.
- Brigade S4 in the brigade rear area.

MCTs may also perform Highway Regulation when they are assigned a geographical AOR within the COMMZ or Corps rear area. The MCA, MCB, and DTO also monitor Highway Regulation in subordinate command areas and may regulate some of the routes based upon the tactical situation.

7-16. HIGHWAY REGULATION PLANNING. The extent of the regulation depends upon the number of moves and the capacity of the road networks. Highway Regulation is crucial when operating over underdeveloped and saturated road networks. Free-flow of traffic allows for the maximum movement of cargo and personnel. Transportation planners and operations should only use free-flow when the road network and security requirements allow.

Commanders must be sure that highway movements requirements are managed and that coordinated highway moves occur as listed in the movement program. Figure 7-7 depicts the Highway Regulation function. The planning of Highway Regulation must incorporate planned movement requirements and be flexible enough to accommodate immediate requirements.

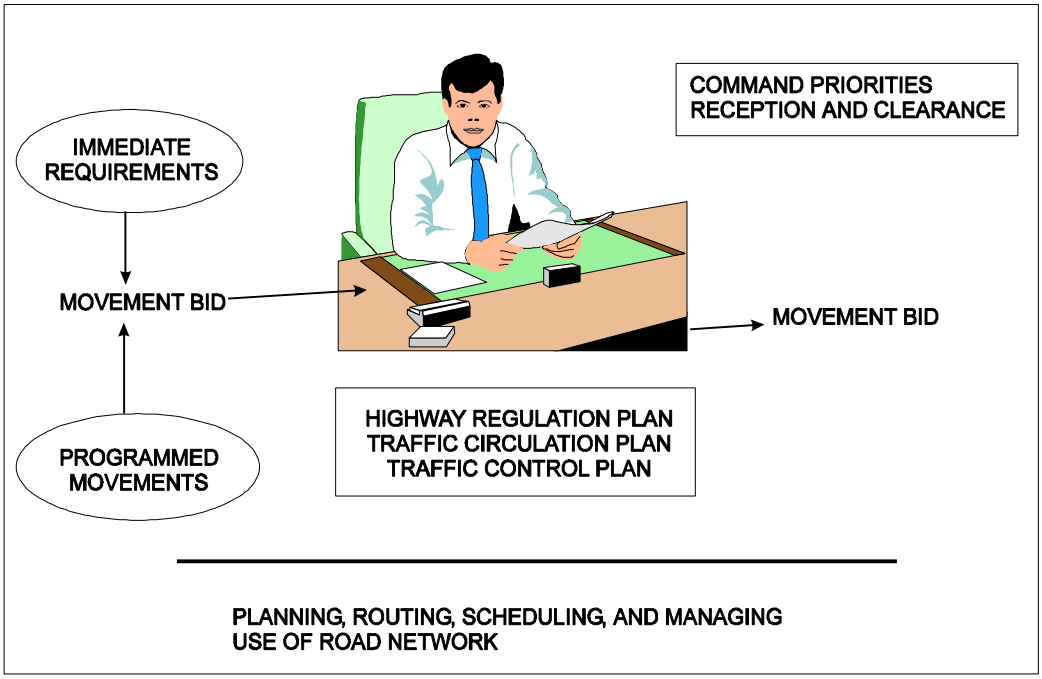

Figure 7-7. Highway Regulation Function

Planned movement requirements are identified in advance. They are found in distribution plans, movement programs, and operation plans and orders. They involve onward movement of forces from PODs, movement of supplies and equipment, and movement of units. Immediate requirements are unplanned and based on requirements generated during the conduct of operations. They include requirements such as unit displacement, unprogrammed resupply, and evacuation. Immediate requirements are normally of a higher priority than planned requirements and must be quickly acted upon.

The goal of Highway Regulation planning is to sustain movements according to the commander's priorities and make the most effective and efficient use of the road networks. Planning is done in a logical sequence and results in the publication of the Highway Regulation Plan and the Traffic Circulation Plan. The first step in the planning process is to assemble critical information. This information can be found in the following:

- *Operation plans, operation orders, and estimates.* OPLANs, OPORDs, and estimates contain essential information. Movement planners must read and understand the concept of operation to effectively support the commander's intent while executing Highway Regulation. Information such as geographic boundaries, task organization, priorities, and locations of major supply activities are also contained in these plans.
- *Engineer route reconnaissance or classification overlays.* The engineer route reconnaissance or classification overlays provide detailed information on the characteristics of the road network such as road surface, width, restrictive features, and bridge classifications (see FM 5-36 for details). This information is necessary to determine critical points and route capacity. The characteristics of the route are contained in the route classification formula. Current information is required and thorough route reconnaissance may not always be possible or feasible. Therefore, movement planners may also obtain information from aerial photographs, local authorities, intelligence reports, and MP hasty route reconnaissance to supplement information obtained from maps or intelligence studies.
- *Traffic density information.* Traffic density information is the anticipated volume of traffic on route segments during specific periods. It comes from planned requirements contained in the distribution plan, movement program, the OPLAN or OPORD, or FRAGOs. Planners must extract specified and implied requirements for unit movements, sustainment movements, and retrograde movements. These documents may also require moving civilian refugees, unit displacement, or shared use by allied or HN forces. Each type of movement must be prioritized, planned, and coordinated.
- *Terminals and facilities data.* Terminals and facilities data obtained from the theater distribution plan, include the location of supply points, terminal transfer points, staging and assembly areas, aerial ports and sea ports, airfields and drop zones, and refuel points. These are considered in terms of their total clearance and reception capabilities. Specific considerations include location, access from MSRs, and their capability to receive, load, unload, and stage. The location of reporting points such as FDRP must also be identified.
- *First destination reporting point.* The FDRP is a control measure used to track convoy movements entering an operational echelon. It is normally established near the echelon's rear boundary to provide visibility from the rear boundary forward into the echelon's AO. The FDRP is normally located along an MSR that allows lateral movement onto other MSRs or ASRs. The FDRP provides a central location to route, reroute, or divert convoys as required. The FDRP will

normally have an MCT (HRT), MP, or a unit established at the location with available communication means to pass movement information. The FDRP provides for movement along several different divisional MSRs after entering the division area.

When the data is assembled and studied, movement planners must identify the road networks that are capable of supporting the volume of traffic necessary to meet planned and anticipated movement requirements. These road networks will be recommended as MSRs and ASRs. Planners must also plan extensions of the MSRs to anticipate forward movement of maneuver forces. ASRs are used when the MSRs are disabled and should be planned for in the same manner as MSRs through the DMC. At this point in planning, it is necessary to obtain approval of the G4 and G3. The G4 has staff supervision for movement planning. The G3 is responsible for terrain management. The G3 must approve the selection of MSRs and ASRs before movement planners can conduct detailed Highway Regulation planning.

Movement planners will develop the Highway Regulation Plan and Traffic Circulation Plan after the G3 approves the MSRs/ASRs. The Highway Regulation Plan is a written plan that describes the MSR network and establishes control measures to promote effective regulation (an example of a Highway Regulation Plan is shown at the end of this chapter). The Traffic Circulation Plan is a map overlay or graphic representation of the MSR network. Both are published as an appendix or annex to the OPLAN or OPORD. They are used by the PM to develop the Traffic Control Plan. The development process involves the following:

- *Naming each MSR according to command directives.* Avoid using colors to name MSRs since the MSR status and other logistics statuses are normally reported as green, amber, red, or black. Avoid using numbers to name MSRs because they may conflict with existing route numbers.
- *Determining critical points.* Critical points are areas of interest to movement planners. Plans do not list every critical point but only the most important ones that may affect traffic flow. These critical points include the following:

  - Roadway structures or features that limit road width, overhead clearance, or vehicle load class. These include washouts, overpasses, bridges, and degraded road surface conditions.
  - Crossroads at grade level.
  - Bridges, overpasses, underpasses, ferries, fords, constrictions, and sharp turns under a 30-meter (100-foot) radius.

- *Establishing checkpoints on each MSR to segment the MSRs.* Segmenting the MSR facilitates Highway Regulation and traffic control planning and execution. Checkpoints should be established at the following:

  - Major crossroads.
  - Locations where road conditions change.
  - Major supply or service areas.
  - Geographic boundaries.
  - Assembly areas.
  - Other critical points.

Checkpoints are predetermined points on the MSR that are used as a means of regulating and controlling movement. Units use CPs when requesting movement clearance by using CPs to identify their start point, release point, and en route CPs. Checkpoints enable quick dissemination of information during execution such as a point where traffic will be rerouted. Checkpoints are also used when describing the MSR in the Highway Regulation Plan. Some examples are as follows:

- "MSR Spear" is a paved, all weather road from CP 22 to CP 34.
- From CP 34 to the 54th Division rear boundary, the MSR is an improved fair weather road. The MSR can accommodate two-way traffic.
- The route is classified as an open route from CP 22 to CP 34.
- It is a supervised route from CP 34 to CP 8 at the division rear boundary. Convoys of eight or more vehicles, tracked vehicles, or vehicles that cannot maintain a 30 kmih march rate require a movement credit on that segment.
- The most restrictive route feature is at CP 35, a bridge with a MLC of 30. Vehicles with an MLC greater than 30 must use the ford at NJ334098. Signs for the ford are posted.

Planners should identify sufficient CPs to adequately exercise control, but no more than they have the capability to manage when the plan is executed. This requires careful balancing so that excessive CPs do not impede execution.

- *Establishing control measures for each route.* Control measures should be based on the engineer route classifications, planned and anticipated traffic volume, METT-TC, and critical points. Planners must also consider the capabilities of movement control and traffic control units to enforce the control measures. Control measures may change based on the conduct of operations. Movement planners must ensure that changes are incorporated into a FRAGO or otherwise disseminated quickly. Below are the five control measures:

  - Open Route. This is the least restrictive control measure. Any unit may use the route without a movement credit. Minimum control is exercised.
  - Supervised Route. The movement control headquarters will specify the size of convoys, the type of traffic, or characteristics of vehicles that require a movement credit to use the route. Limited control is exercised.
  - Dispatch Route. A movement credit is required to use this route regardless of the number or types of vehicles. A dispatch route will normally be designated when traffic volume is expected to exceed capacity or when the route is critical to operations and priority of use must be strictly enforced. Full control is exercised.
  - Reserved Route. The route is reserved for the exclusive use of a particular unit(s) or type of traffic and no other units/traffic may use the route. Reserved routes may be identified for large unit movements. Examples are when a maneuver unit must pass another forward, when reserve formations are committed, or when units are withdrawn for reconstitution.
  - Prohibited Route. The route is closed and no unit/traffic may use the route. A route may be prohibited due to washouts, destroyed bridges, maintenance, or construction work. It may be prohibited for only short periods, such as the time necessary to do repairs.

- *Making a Traffic Circulation Plan (see Figure 7-8).* The overlay will show all MSRs, CPs, and Highway Regulation points. It will also include route names, direction of travel, boundaries, and principal supply activities. It will reflect any restrictive route features, critical points, FDRPs, and convoy support centers. It may include traffic control points if provided by the PM before publication of the Traffic Circulation Plan.
- *Determining reporting requirements.* These requirements are for units using the MSR if reporting is necessary.
- *Developing the Highway Regulation Plan.* The Highway Regulation Plan is included in the operation plan or order. The written plan will describe the information contained on the overlay and specify the control measures that apply to each MSR or critical segments of MSRs. Control measures should be coordinated to phases of the operation if they can be determined in advance. These should be coordinated with the DMC, then the G3, especially requirements for reserved routes to support large unit movements.
- *Staffing and coordinating the plan.* Recommend points where traffic control will be required. Recommend locations and priorities for engineer repair and upgrade efforts.

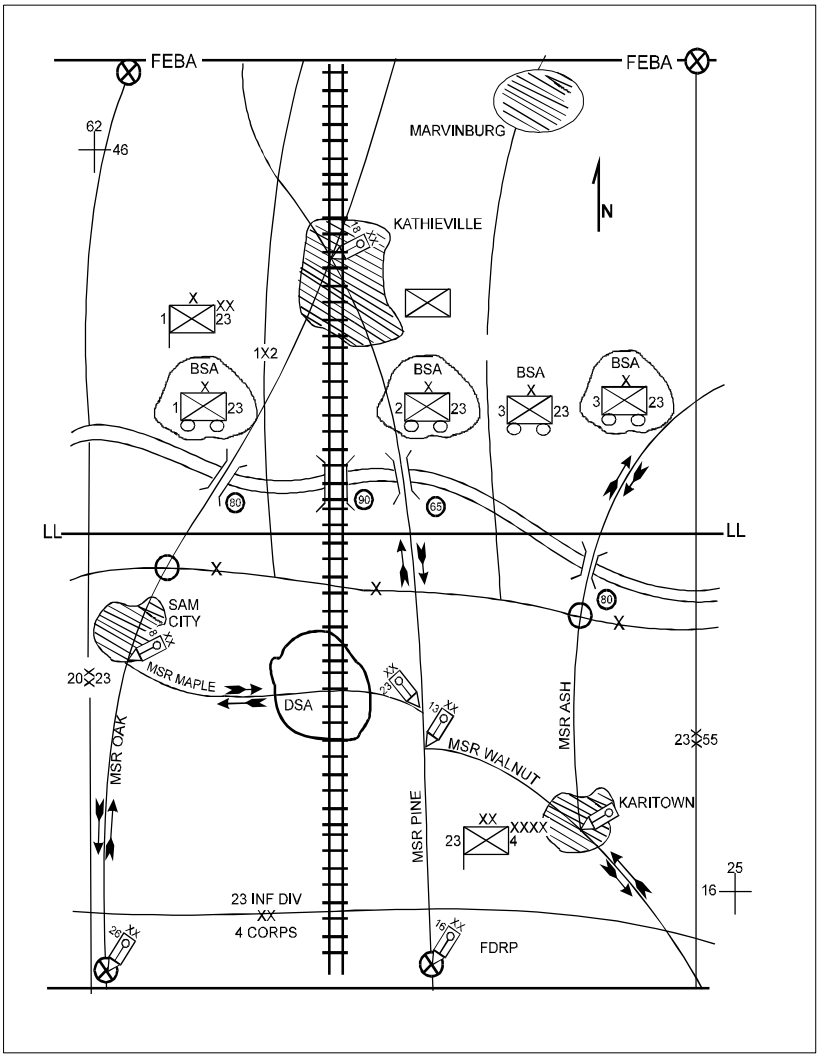

Figure 7-8. Sample Traffic Circulation Plan

7-17. FUNDAMENTALS AND PRINCIPLES OF ROUTING. Routing is the process of coordinating or directing movements on MSRs or ASRs. When routing traffic, movement planners should consider the three fundamentals and four principles which govern routing. The three fundamentals that govern routing are balance, separation, and distribution.

a. Balance. Balance is the process of matching vehicle characteristics with route characteristics. Balance ensures that traffic never routinely exceeds the most limiting feature of a route. It considers the MLC of the vehicles and bridges and the route. Balancing also identifies requirements for upgrading routes or ordering caution crossings for certain bridges. Planners should use TB 55-46-1 to obtain vehicle characteristics. Route characteristics are obtained during the planning process.

b. Separation. Separation is the process of allocating road space for movements to ensure that movements do not conflict. The goal of separation is to prevent congestion on regulated routes. Planners must not allocate road space or time blocks to more than one movement requirement.

c. Distribution. Distribution is the process of allocating as many routes as possible to reduce the potential for congestion and prevent deterioration of road surfaces. Distribution also promotes passive defense by distributing and separating traffic.

The four principles which govern routing are as follows:

- Assign highest priority traffic to routes that provide the minimum time-distance.
- Consider the sustained capabilities of roads and bridges when assigning movements.
- Separate motor movements from pedestrian movements.
- Separate civilian traffic (vehicular or pedestrian) from military movements.

7-18. FUNDAMENTALS AND METHODS OF SCHEDULING. Scheduling is the process of coordinating times for road movements. It involves receiving movement bids (requests), managing requests, and issuing credits (clearances). Scheduling is necessary for the following:

- Applying command priorities.
- Applying the fundamentals of routing to reduce delays, conflicts, and congestion.
- Conducting detailed planning for large unit or high-priority movements.
- Reserving time for route maintenance.
- Rerouting or holding movements based on changes in priority or the tactical situation.

The following guidelines apply in scheduling movements:

- Movements on routes requiring movement credit must be scheduled.
- Movements that cross movement control boundaries must be scheduled, coordinated, and inbound cleared by the movement control organization responsible for the area where the movement originates to the movement control organization where the movement terminates.
- Large unit movements should be scheduled.

- Movements in one direction on routes that require a movement credit are treated as a single movement regardless of the distance or time involved. Each movement retains the same movement credit to destination.
- Schedules and changes to schedules due to immediate movement requirements are provided to the MRTs to execute Highway Regulation and the PM to provide traffic control.

The method of scheduling road movements will be based on the control measures specified for the route. The four types of scheduling methods are:

- Infiltration.
- Route.
- Location.
- Column.

These methods (from the least restrictive to the most restrictive) are described below.

a. Infiltration Schedule. This schedule is a rate of dispatch assigned to units for specific routes and time blocks to achieve an average traffic flow that is within the capacity of the route. By assigning rates of dispatch to different units that need to use the same route, average traffic flow can be held within desired limits. An infiltration schedule may be used for open or supervised routes.

b. Route Schedule. This schedule is a flexible scheduling method. It apportions blocks of time on MSRs to units, types of movements, phases of the operation, or for route maintenance. A route schedule may be used for supervised, dispatch, or reserved routes.

c. Location Schedule. This schedule is more restrictive than an infiltration or route schedule. It assigns arrive and clear times to different units needing to use the same entry point onto MSRs. The location will normally be a CP. For example, at a particular CP, unit A may be scheduled to arrive at 1000 and to clear at 1015, unit B to arrive at 1020 and to clear at 1030, and so on. A location schedule may be used for supervised or dispatch routes.

d. Column Schedule. This schedule is the most restrictive scheduling method. It specifies arrive and clear times at CPs along an entire route. It may be based on the requestor's movement bid or movement table or on movement tables issued by the movement control organization. Based upon the extent of control required, a column schedule can provide the most effective Highway Regulation because it provides in-transit times to reach CPs and helps the pacesetter maintain the prescribed rate of march. It may be used for supervised, dispatch, or reserved routes. It should also be used when congestion is anticipated.

Section III. Sustainment Operations

7-19. TRANSPORTATION OPERATIONS AT EAC. Battlefield distribution, automation, and radio frequency identification (also known as tracking) are performed at the EAC level. These operations are described below.

a. Battlefield Distribution. Sustainment cargo will arrive at the theater concurrent with the deploying force. The MCA will be responsible for aerial management of containers. Arranging transportation for throughput of the sustainment cargo to destination will fall to the port MCT. Priority of the unit containers versus the sustainment containers will be METT-TC dependent and

based on the commander's priority. The MCA will provide the TSC MMC a copy of the manifest. During initial deployment, the information may be moved by courier. After the area communications system is in place, the information will be sent electronically. The MCA will use the manifest in the development of the movement plan, with the TSC MMC providing disposition information to the MCA. The movement plan will be passed to the DMC, the MMC, and all movement control elements in theater. At discharge, the port MCT, using DAMMS-R/TC-AIMS II, will schedule transport of the containers to the destination SSA. Containers arriving in theater that do not have a destination (frustrated) or have multiple consignees, will be forwarded to the servicing hub. The hub will be operated by a cargo transfer company and cargo documentation detachments. Multiple consignee containers will be unstuffed, redocumented, and transported. An area MCT servicing the hub will arrange onward transportation. The hub will coordinate with the TSC MMC to determine destination of frustrated cargo and arrange onward transportation through the area MCT.

The port MCT will contact the MCT servicing the destination (if one is in country) and request an inbound clearance. The originating MCT will ensure the receiving SSA is aware of the container's arrival time and that CHE/MHE is on hand to discharge the cargo. If CHE is not available at the destination, the MCT may contact the MCA to request elements of the transportation cargo transfer company to temporarily provide CHE at that location.

If a theater or Corps SSA receives a surge of containers and requires additional CHE, its servicing MCT may request from the MCA or CMCB that CHE from the transportation cargo transport company be sent to support the organization on a temporary basis until the backlog is relieved. Theater and Corps SSAs will notify the MCT of the status of the containers on-hand to include projected availability date. The MCA will determine whether the containers should remain within the theater or be returned to the strategic level of operation.

b. Automation and Radio Frequency Identification. The RF interrogators will update the system when containers are moved to a EAC hub. Based on the container consignee and disposition guidance from the TMMC, the area MCT (using DAMMS-R/TC-AIMS II) will schedule the transport of the containers. When possible, containers will be throughput to the destination SSA. If the container is multipacked for units, it will be sent to the EAC hub. The hub will receive disposition of containers for units based on guidance from the TMMC.

7-20. TRANSPORTATION OPERATIONS AT CORPS. Battlefield distribution, automation, and radio frequency identification (also known as tracking) are performed at the Corps level. These operations are described below.

a. Battlefield Distribution. The CMCB will be responsible for management of containers in a Corps area. They will receive a copy of the theater movement plan from the MCA and coordinate with the CMMC to develop the Corps movement plan. The movement plan will be passed to the CDMC, the CMMC, and all movement control elements in Corps. The area MCT will receive notice of shipments coming into the Corps either through the movement plan or by notification by the MCT servicing the shipper or hub. Using DAMMS-R/TC-AIMS II, the area MCT will schedule the transport of containers to the destination SSA. Containers arriving in the Corps, that do not have a unit address or have multiple consignees, will be forwarded to the Corps hub. The hub will be operated by a cargo transfer company and cargo documentation detachments. Multiple consignee containers will be unstuffed, redocumented, and transported. An area MCT servicing the hub will arrange onward transportation. The hub will coordinate with the CMMC to determine destination of frustrated cargo and arrange onward transportation through the area MCT.

The area MCT will contact the MCT servicing the destination, the DISCOM MCO for shipments to a division, and request inbound clearance. The originating MCT will ensure the receiving SSA is aware of the container's arrival time and that CHE/MHE is on hand to discharge the cargo. If CHE is not available at the destination, the MCT may contact the CMCB to request elements of a Corps transportation cargo transfer company to temporarily provide CHE at that location.

If a Corps or division SSA receives a surge of containers and requires additional CHE, their servicing MCT/MCO may request from the CMCB that CHE from the transportation cargo transport company be sent to support the organization on a temporary basis until the backlog is relieved. The Corps and division SSAs will notify the MCT of the status of the containers on-hand to include projected availability date. The MCA will determine whether the containers should remain within the theater or be returned to the strategic level of operation.

b. Automation and Radio Frequency Identification. The RF interrogators will update the system when containers are moved to a Corps hub. Based on the container consignee and disposition guidance from the CMMC, the area MCT (using DAMMS-R/TC-AIMS II) will schedule the transport of the containers. When possible, containers will be throughput to the destination SSA. If the container is multipacked for units, it will be sent to the Corps hub. The hub will receive disposition of containers for units based on guidance from the CMMC.

If the shipment is on the movement plan and the receiving activity is expecting a particular container and is known to have sufficient CHE to handle the container, then the container will be transported free flow to the unit/hub. However, if the container was not on the movement plan or the port MCT is not sure that the unit/hub can receive it, the port MCT will contact the MCT servicing the destination and request positive inbound clearance to transport. The originating MCT will ensure the receiving SSA/hub is aware of the container's arrival time and that CHE/MHE is on-hand to discharge the cargo. As a container departs, the RF interrogator at the exit will update the DAMMS-R/TC-AIMS II system. The area MCT updates the CMCB via DAMMS-R/TC-AIMS II. The mode operator will track the movement of the container using the satellite-based MTS.

Container cargo will be transshipped at the Corps hub and transported based on CMMC instructions. The cargo can be restuffed into a container or transported breakbulk on trucks or trailers. The MCT servicing the Corps hub will schedule transportation and contact the receiving MCT/MCO. RF interrogators at the hub will update the DAMMS-R/TC-AIMS II system via modem or the area communications system when a container is relocated.

The Corps SSAs and the hub will notify the MCT when containers are available for retrograde. Retrograde containers may be retained at the hubs to be used for distribution within the theater of operation.

7-21. TRANSPORTATION OPERATIONS AT DIVISION. Battlefield distribution, automation, and radio frequency identification (also known as tracking) are performed at the Division level. These operations are described below.

a. Battlefield Distribution. The DTO and MCO will receive a copy of the Corps movement plan from the CMCB and coordinate with the DMMC to develop the division movement plan. The movement plan will be passed to the DDMC and the DMMC. The division support MCT or the MCO will receive notice of shipments coming into division either through the movement plan or by notification from the MCT servicing the shipper or hub. The division support MCT or the MCO will ensure the receiving SSA is aware of the container's arrival time and that CHE/MHE is on hand to discharge the cargo. If CHE is not available at the destination, the MCT/MCO may contact the CMCB to request elements of a Corps transportation cargo transfer company to temporarily provide CHE at that location.

If a division SSA receives a surge of containers and requires additional CHE, the MCT/MCO may request from the CMCB that CHE from the transportation cargo transport company be sent to support the organization on a temporary basis until the backlog is relieved. The division SSAs will notify the MCT/MCO of the status of containers on-hand to include projected availability date.

b. Automation and Radio Frequency Identification. The RF interrogators will update the system when containers are moved to a division SSA. If the shipment is on the movement plan and the receiving activity is expecting a particular container and is known to have sufficient CHE to handle the container, then the container will be transported free flow to the unit. However, if the container was not on the movement plan or the MCO is not sure that the unit can receive it, the MCO will contact the destination and confirm clearance to transport. The MCO will ensure the receiving SSA is aware of the container's arrival time and that CHE/MHE is on-hand to discharge the cargo. As a container arrives, the RF interrogator at the entrance will update the DAMMS-R/TC-AIMS II system. The MCO updates the CMCB via DAMMS-R/TC-AIMS II.

7-22. TRANSPORTATION OPERATIONS AT BRIGADE. Battlefield distribution, automation, and radio frequency identification (also known as tracking) are performed at the Brigade level. These operations are described below.

a. Battlefield Distribution. The DTO and MCO will distribute a copy of the division movement plan to the FSB MC NCO. The MC NCO will ensure the receiving SSA is aware of the containers arrival time and that CHE/MHE is on hand to discharge the cargo. If CHE is not available at the destination, the MC NCO may contact the MCO to request elements of a Corps transportation cargo transfer company to temporarily provide CHE at that location.

b. Automation and Radio Frequency Identification. The RF interrogators will update the system when containers are moved to a brigade SSA. The MCO will ensure the receiving SSA is aware of the containers arrival time and that CHE/MHE is on hand to discharge the cargo. As a container arrives, the RF interrogator at the entrance will update the DAMMS-R/TC-AIMS II system. The MC NCO updates the MCO via DAMMS-R/TC-AIMS II.

Section IV. Intermodal Operations

7-23. INTERMODALISM. Army operations involve intermodal movement of personnel, equipment, mail, and materiel by air, land, and sea from installations, depots, or commercial vendors to areas requiring the deployment of forces. Intermodalism is the transferring of passengers or transshipping of cargo among two or more modes of transportation.

7-24. CONTAINERIZATION. The Army's goal is to increase the use of containers to improve the use of strategic lift. This will improve the force closure for unit equipment and sustainment supplies. The Army's effective use of containers improves both materiel and distribution throughout the battlefield and field warehousing. See FM 55-80 for more information on containerization.

7-25. FLATRACKS. The three types of flatracks used in theater are the intermodal flatrack (M), M1077 (A Frame), and the Container Roll-in/Roll-off Platform. Each type of flatrack is described below.

a. Intermodal Flatrack (M1). These flatracks are used at the strategic level and provided to specialized units that them as organic equipment. This flatrack will be accounted for by the same procedures as propositioned equipment and by unit procedures for organic equipment.

b. M1077 (A Frame). These flatracks are managed and accounted for in accordance with AR 710-2. They will remain at Corps and below and be managed by the lowest common HQ when centralized into a pool of assets.

c. Container Roll-in/Roll-off Platform. These flatracks are used at Depot to front and returned as a strategic distribution asset. The CROP will be tracked and accounted for in accordance with current container tracking procedures and will be retrograded on a one-for-one basis to ensure that the strategic flow is maintained. As the CROP replaces the other types of flatracks, the procedures will become echelon/mission specific as opposed to type specific.

7-26. AIRLIFT. Airlift supports US national strategy by rapidly transporting personnel and materiel to and from or within a theater. To maintain a force's level of effectiveness, airlift sustainment missions provide resupply of high-priority equipment, personnel, and supplies. Airlift characteristics of speed, flexibility, range, and responsiveness, complement other US mobility assets.

7-27. AIR CARGO AND AERIAL PORTS. Sustainment operations are clearly dependent upon airlift when high priority, urgent supplies, and equipment are needed to ensure the continued success of an operation.

The Army's standard supply distribution system for supply Classes II, III(P), IV, V (missile components only), VII, VIII, and IX is the direct support system. The DSS provides for direct delivery of shipments from a CONUS wholesale depot to a SSA, which in turn distributes the item(s) to the requesting customer. Certain selected items of materiel are eligible for air delivery through ALOC. These items include routine priority (normally priority designator 09-15), Class VIII and Class IX, and selected maintenance-related Class II and Class IV items.

Air cargo traveling through the ALOC system is intensively managed to ensure its timely receipt and onward movement. This management process begins when the materiel is received by the APOE with the generation of an air manifest. Advance copies of the air manifest are forwarded

to the APOD and other movement management activities in the theater of operations to facilitate prompt handling and processing upon arrival of the material being shipped.

Section V. Transportation Operations

7-28. TRANSPORTATION REQUEST PROCEDURES. Movement managers, through mode selection and transportation request procedures in a theater of operations, are key to the support of transportation requirements. They are primarily responsible for prioritizing requirements and selecting the mode most appropriate to satisfy the requirement.

a. MCT Responsibilities. The MCTs are the immediate interface with the organization that is requesting transportation support. The MCTs responsibilities are as follows:

(1) Origin MCT procedures. On receipt of a transportation request, the origin MCT ensures that the request is complete and accurate. If the request activates a program line number, the MCT will check the program for predetermined mode selection and commit the mode operator. If there are any changes made to the movement requirement such as change of locations, quantity of materiel, or priority, the MCT will revalidate the programmed mode before committing a mode operator. For unprogrammed movements, the MCT will select the mode and commit a mode operator.

(2) Mode considerations. The MCT plans to commit all available transportation modes to fulfill known requirements. Assets should not be reserved in anticipation of unforeseen requirements. The MCT should meet requirements as they occur by committing transportation mode operators according to command priorities, selecting the most efficient and effective mode, and planning to meet the RDD.

(3) Mode selection. The MCT must consider many other factors in selecting a mode. These factors include the following:

- *Service considerations.* Provide service according to need based on command priorities.
- *Security considerations.* Consider security requirements for shipments involving nuclear materials, hazardous or classified cargo, ammunition, or other sensitive cargo.
- *Political considerations.* Coordinate with the G5 to determine if there are any political sensitivities to materiel being shipped. This may require movement at night, by air, or by any other means to safeguard sensitive/classified cargo.
- *Tactical considerations.* Coordinate with the requesting unit to determine potential changes in pickup or delivery locations.
- *Highway considerations.* Rerouting may be required if there are changes to route classifications or the distribution pattern.
- *Rail considerations.* Use is limited to lines that support supply activities or where transloading can be accomplished with MHE, personnel, and trucks.
- *Air considerations.* Use is limited to aircraft allocated for CSS air movement operations or approved requests. (See airlift request procedures below.)

- *Water considerations*. Use is limited to the availability of barges or boats, cargo transfer units and equipment, and channels capable of accommodating the types of craft available.
- *HN assets*. Use is limited to those modes and assets provided by the host country. HNS is coordinated by the G5 or unit having a HNS coordinating mission.

(4) Transportation movement request number. The TMR is a unique alphanumeric code. The TMR specifies and authorizes movement or represents use of a transportation asset as directed through movement control channels.

(5) Positive inbound clearance. The origin MCT requests positive inbound clearance for sensitive, classified, oversize and/or overweight, or other theater-directed shipments through the destination MCT before issuing a TMR. Requests are forwarded to the destination MCT which in turn contacts the consignee. The destination MCT confirms the consignee's location and ability to off-load the cargo. The destination MCT forwards this information back to the origin MCT. If the consignee is unable to receive a shipment, the origin MCT reprograms the shipment by coordinating for alternate delivery dates (hold), reconsigning the shipment to another consignee (divert), or canceling the original request. The origin MCT schedules routine shipments without an inbound clearance unless the receiving activity, through the destination MCT, notifies the origin MCT that it cannot receive the shipment and requests the origin MCT to hold or divert.

(6) Mode operator. The MCT commits a mode operator identified either in the movement program or one in the origin MCT's geographic area. Commitments will flow through predetermined channels developed between the movement control headquarters (MCA/MCB) and the mode operating HQ. If a movement credit is required, the mode operator will submit a movement bid (request for convoy/highway clearances) to its supporting MCT. If mode operators can no longer support the transportation request for any reason, they must notify the MCT immediately. The MCT will either attempt to establish an alternate delivery date that satisfies the consignee, select another mode, request HN assets, delay lower priority shipments, or request assistance from its HQ.

(7) Report of shipment. The origin MCT normally notifies the destination MCT of the movement so the destination MCT can coordinate with the receiving activity or consignee.

(8) Consignee receives cargo. The consignee notifies the destination servicing MCT when it receives the shipment. The MCT closes out the TMR. If the shipment required positive inbound clearance, the destination MCT will forward the receipt notification to the origin MCT for final reconciliation. Supply activities or consignees may or may not have reliable communications with their servicing MCT. If this is the case, the mode operator will report shipment delivery.

b. Transportation Request Process. The Division, Corps, and EAC transportation request processes are described below.

(1) Division. Transportation requirements are either planned or immediate. Division units request transportation support from the DISCOM MCO. Depending upon the type of division, location of units on the battlefield, and defined support relationships, the request may flow from the brigade or separate battalion through its FSB or MSB to the MCO.

(a) The MCO coordinates with the DMMC and division units to plan and program transportation requirements. This includes movement of supplies and equipment between the DSA and the BSA. The DMMC has visibility over the location and status of supply quantities in the division and directs repositioning. The MCO also coordinates with the G1 to forecast transportation requirements to move replacement personnel.

(b) To the extent practical, the FSB should coordinate in advance with the MCO to use loaded trucks moving forward to the BSAs for retrograde (backhaul) of damaged and captured equipment, salvage, or EPWs.

(c) As the supply and maintenance companies in the DSA receive MROs from the DMMC, they request transportation support from their battalion support operations officer. The SOO consolidates the requests and submits requirements to the MCO. The MCO selects and commits the mode based on division priorities. If the MCO commits the division truck company, the MCO will also coordinate to ensure that MHE will be available to off-load the supplies upon delivery. This prior coordination will reduce transportation delays and increase the availability of these trucks for other missions.

(d) Based upon requests and forecasts, if the division is unable to provide the required transportation support using organic assets, the MCO will forward a request (Figure 7-9) for transportation support to the DTO or the servicing MCT. The MCO will normally forward only requests of an exceptional nature through the DTO. The DTO requests support from the Corps MCB.

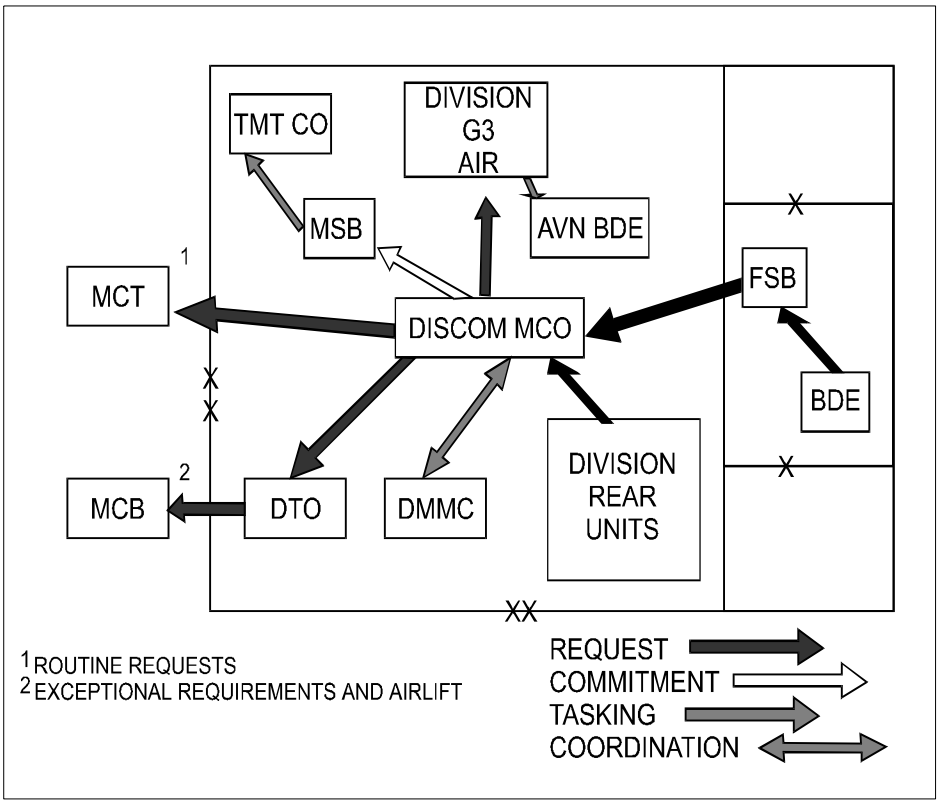

Figure 7-9. Transportation Request Process (Division)

(2) Corps. The Corps resupplies its assigned divisions and separate brigades. The Corps may establish supply point or unit distribution depending upon the situation. The Corps will predetermine these arrangements as part of the logistics planning process. Resupply requirements are based on supply requests from the DMMC to the CMMC or by predetermined daily resupply. The CMMC issues MROs to Corps GS units. The GS unit coordinates transportation through its servicing MCT to move the supplies forward. Corps transportation assets are also used to support units operating in the Corps rear area. Units operating in the Corps area request transportation support from their servicing MCT (Figure 7-10).

(a) The MCT commits the mode operator in its area of jurisdiction to provide transportation. This may be a Corps support battalion or functional transportation battalion depending on the transportation alignment within the CSGs. For shipments requiring positive inbound clearance, the MCT will coordinate with the destination MCT or MCO to coordinate the details of delivery or to coordinate any retrograde movements.

(b) If an MCT needs additional transportation support to satisfy requirements, it forwards requests to the Corps MCB. The Corps MCB will review requests against established priorities and will commit assets from the transportation battalion in the rear CSG or commit assets of another forward CSG.

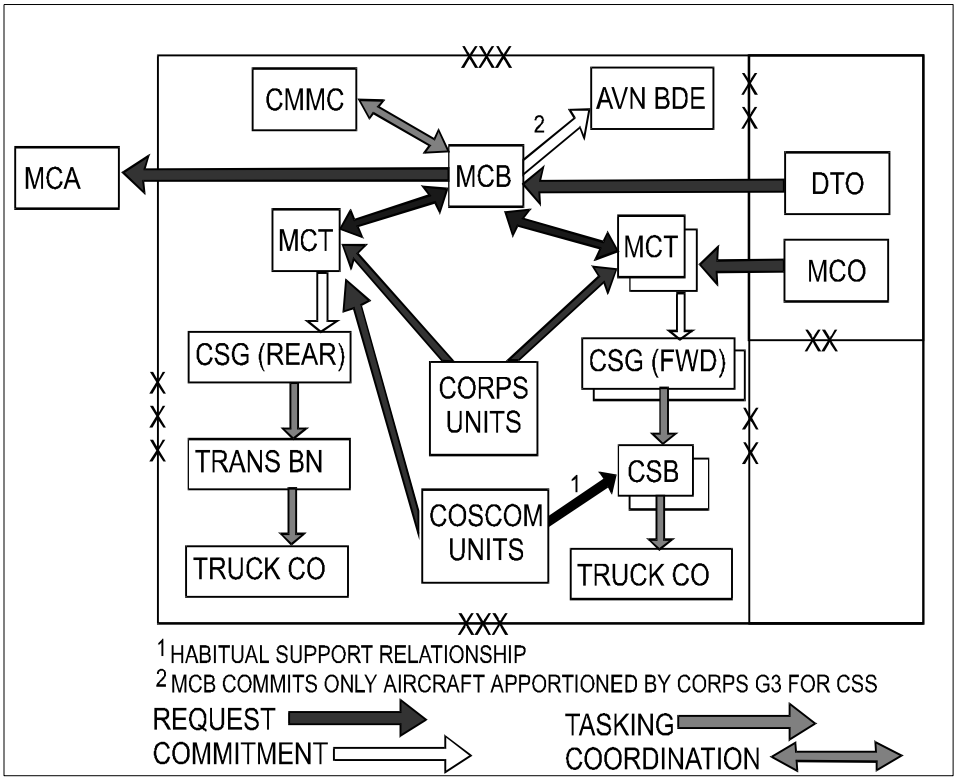

Figure 7-10. Transportation Request Process (Corps)

(c) If there is no alternative means of transport within the Corps, the Corps MCB will forward requests to the MCBs supporting the Corps. The Corps MCB will coordinate directly with the MCA for requirements of an exceptional nature such as movement of large forces, contingency operations, and intratheater airlift.

(3) EAC. The same relationship between the Corps and division exists between the TSC and Corps. If a supply request cannot be satisfied at the COSCOM level, then it is forwarded to the TSC MMC. The TSC MMC will direct supplies to be released from its general support units. The GSU coordinates with servicing MCTs for the onward movement of the cargo. The MCT commits TRANSCOM mode operators to transport the cargo (Figure 7-11).

(a) If TRANSCOM mode operators in the MCT's AOR cannot satisfy all transportation requests, the MCT will request assistance from its MCB. The MCB will coordinate for TRANSCOM assets in other geographic areas or coordinate for allocated HN/allied support. If still unable to obtain required support, the MCB will pass the requirement to the MCA for resolution.

(b) The MCA will review established priorities. It will look at the possibility of cross-leveling TRANSCOM assets to meet the requirement. It will also look at using HN or other service transportation assets. If the MCA cannot find sufficient assets, it will go back to the requestor and see if the RDD can be changed. If not, it will go to G3 at Corps or G3/J3 at theater for resolution.

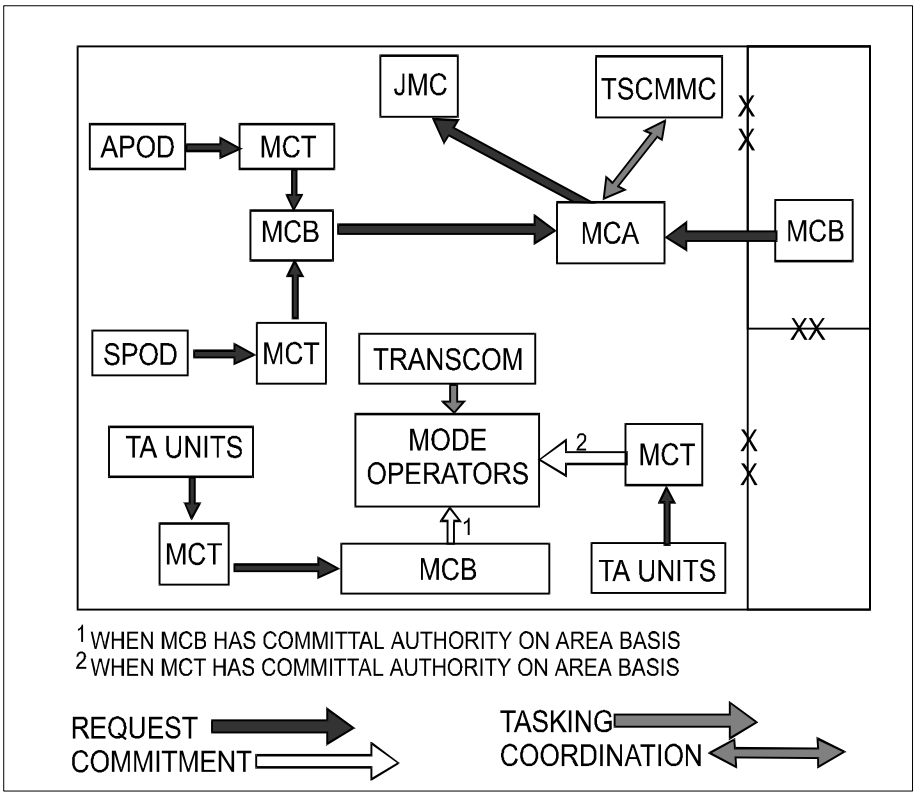

Figure 7-11. Transportation Request Process (EAC)

7-29. REQUEST FOR THEATER AIRLIFT. Airlift is a flexible and essential element of the transportation system. Wide-ranging logistics needs within a theater will require Army and Air Force airlift assets to support forces. While motor transport will normally be the primary mode to support Army forces, airlift becomes an increasingly important mode as the intensity, depth, and duration of operations increase. Airlift can provide rapid movement of cargo, passengers, and equipment without regard to terrain restrictions. It also makes possible resupply of critical items over extended distances. However, there are limitations to the capabilities of airlift. These include weather conditions, control of airspace, weight and cube of materiel, and the requirement for specialized crews and equipment. The following discusses the process for obtaining Army and Air Force airlift to support logistics requirements.

a. Army Aviation. Army aviation in logistics air movement operations includes the following:

- Support for intratheater airlift.
- LOTS operations.
- Troop and personnel movements.
- Aerial preplanned and immediate resupply.
- Movement of critical high priority Class IX.
- Retrograde of repairables.
- Pre-positioning of fuel and ammunition.
- Movement of maintenance support teams.
- Movement of low density/high-cost munitions when time, distance, situation, or the condition of roads inhibit ground transportation.

Movement control units at EAC and Corps and the MCO in the division will commit Army aircraft for logistics air movement operations if aircraft have been allocated for this purpose.

(1) Army aviation units. The primary aviation unit is the aviation brigade. The aviation brigade is a versatile organization found at division, Corps, and EAC. It may contain observation, attack, utility, and cargo helicopters and a limited number of fixed-wing C2 aircraft.

(a) Division. An aviation brigade is organic to each division. Each division aviation brigade is designed, configured, and tailored to meet the tactical requirements of the type of division to which it is assigned. The brigade can provide aircraft for logistics air movement operations to move troops, supplies, or equipment. The primary asset used by the brigade is the utility helicopter, either the UH-60 or UH-1.

(b) Corps. An aviation brigade is organic to each Army Corps. Each Corps aviation brigade is tailored to meet the specific mission requirements of that particular Corps. The Corps aviation brigade's mission is to plan, coordinate, and execute aviation and combined arms operations in support of the Corps scheme of maneuver. In its logistics role, Corps aviation provides movement of critical forces, supplies, and equipment needed to support the battle. The Corps commander should routinely allocate sufficient sorties for logistics air movement missions. The brigade uses a combination of UH-60, UH-1, and CH-47 helicopters.

(c) EAC. EAC aviation brigades are tailored and configured to meet the needs of the theater. They may be organized with attack, utility, and/or cargo aviation assets. The utility and medium helicopters of the EAC aviation brigades provide reinforcing support to the Corps for logistics air movement requirements.

(d) Liaison officers. An LNO is normally designated by the aviation brigade at each echelon to serve as a link between movement control organizations, aviation units, and airlift users. The LNO assists movement control organizations by passing advance information to the aviation units and by providing technical advice to movement planners.

(e) Aviation support of logistics missions. The following describes the various helicopters that support aviation logistics missions.

- Observation. Observation helicopters perform visual observation. They can be employed by movement planners for route reconnaissance, observation of surface movements, and to assist in planning the use of facilities and infrastructure. They include the OH-58 series.
- Utility**.** Utility helicopters perform a variety of missions to support movement of forces, supplies, equipment, and personnel. They include the UH-1 and UH-60 series.
- Cargo. Cargo helicopters perform a variety of missions to support movement of forces, supplies, and equipment; LOTS operations; and air movement of munitions. They include the CH-47 series.

(f) Army logistics air movement request procedures. Requirements for logistics air movement operations are characterized as either preplanned or immediate.

- Preplanned requests. Requirements for preplanned airlift are determined as part of movement programming. Movement planners determine in advance that air is the best or most effective mode based on the urgency of the requirement and characteristics of the personnel, supplies, or equipment to be moved. Division, Corps, and EAC requests are processed as follows--

  - Division. Preplanned requests are forwarded to the MCO as part of the planning process to obtain airlift for future operations. The MCO reviews the requests and either validates them or recommends an alternate mode. If the MCO validates the requests, he forwards the requests to the DTO. The DTO will coordinate the requirements with the ADAO, a member of the G3 battle staff, to get aircraft allocated by the G3. Once the G3 allocates assets for logistics air movement operations, the MCO programs the requirement and commits the aviation brigade through the aviation LNO in the rear command post. The MCO also commits truck assets to be used in moving cargo to an airfield, sling point, or landing area. If division aircraft are not available for logistics air movement operations, the DTO will either work through the G3 and G4 to manage priorities; or he will validate and pass the requests to the Corps MCB for Corps aviation or USAF support.
  - Corps. The Corps MCB receives preplanned requests through the MCTs from Corps units or validated division airlift requests during the planning process. For Corps units, the MCT reviews requests and either passes requests to the Corps MCB or recommends

another mode. The Corps MCB coordinates requirements with the CTO to obtain G3 allocation. If the G3 has allocated airlift assets to the Corps MCB for CSS air movement operations, the Corps MCB validates requests, programs, and commits the allocated airlift assets through the aviation LNO to support the missions. The Corps MCB informs the origin MCT of the validation and committal of air assets. The MCT concurrently commits highway assets to move the personnel or cargo to the on-load site or airfield. The MCT also clears the inbound movement with the destination MCT or DTO/MCO. For validated division requests, the Corps MCB either commits allocated Corps aviation assets or validates the requests and passes them to the MCA.

- EAC. The MCA receives transportation requests from units in the COMMZ or validated Corps/division airlift requests. The request process for EAC units is basically the same as for Corps units. MCTs forward airlift requests through their MCB to the MCA. If airlift assets have been allocated for logistics, the MCA is the committal authority. If the MCA designates a MCB to commit Army airlift allocated for logistics air movement operations, then the battalion also becomes the validating authority for requirements it must pass to the MCA. If the aviation brigade cannot support the mission, the MCA forwards the requests to the JMC. The JMC will either commit other service/HN aviation units or return requests to the MCA for mode change.

- Immediate requests. Immediate airlift missions result from unanticipated, urgent, or priority movement requirements. Movement planners must quickly determine if air is the best and most effective mode based on the urgency of the requirement and characteristics of the personnel, supplies, or equipment to be moved. Request procedures must be responsive and flexible to respond to rapidly changing situations. Request procedures for division, Corps, and EAC are below.

- Division. Immediate requests may be forwarded by unit S4s, the DISCOM, or through operational channels to the G3 to meet urgent requirements. Concurrently, the information must also pass through movement/support operations channels to coordinate logistical aspects of the movement. The G3 is the tasking authority for division aviation assets and the validation authority for requests passed to Corps. The DTO and ADAO coordinate to obtain G3 approval. The MCO and LNO coordinate missions. These events occur simultaneously.
- Corps. If airlift assets have not been previously allocated for logistics missions, the Corps MCB or requesting unit passes requests through command channels to the G3. The G3 is the tasking authority for immediate requests. If the Corps cannot support CSS missions at that time, the G3 may validate and pass airlift requests to the theater. If the G3 does not validate the requests, he will pass them to the MCB, which will select alternate modes. Simultaneous coordination in logistical channels is required to support the mission.
- EAC. If airlift assets have not been previously allocated for logistics missions, the MCA or requesting unit passes requests through command channels to the ASCC Deputy Chief of Staff for Operations. The DCSOPS is the tasking authority for immediate requests. If the ASCC cannot support logistics missions at that time, the DCSOPS may validate and pass the airlift requests to the J3. If the DCSOPS does not validate the requests, he will pass it back to the MCA, which will select alternate modes. Simultaneous coordination in logistical channels is required to support the mission.

(g) Logistics airlift request validation. Requests will be reviewed and validated at each level. Requests are considered valid if forwarded to the next echelon for subsequent validation or to the mode operator for execution. The review considers the following:

- Priority and urgency of the movement requirement.
- Commander's priorities.
- Competing requirements and aircraft availability.
- Adequacy of other modes.
- METT-TC factors.
- Availability of MHE at the destination if required.
- Location and adequacy of origin and destination landing zones.

b. Air Force Airlift. Air Force airlift and airdrop is generally designated as common-user airlift to support the air movement requirements of all Service components assigned to the theater of operations. Air Force airlift and airdrop can be used to supplement Army transportation capability under certain circumstances. However, Air Force airlift and airdrop generally require much longer lead times to plan and coordinate than Army logistics air movement operations because of the following:

- Materiel and personnel must be moved to an airfield. This requires supplemental transportation and additional coordination.
- Materiel and other air cargo must be palletized or rigged. Personnel must be marshaled and manifested. Load planning and a DACG are required.
- Request procedures inherently require longer lead times because the final validator is the theater combatant command agent, not the Army.

The Army component commander must validate and prioritize all Army airlift and airdrop requests. The Army component commander normally designates the MCA as the Army validator. The MCA passes validated Army airlift and airdrop requests to the theater combatant commander's agent (normally the JMC) to prioritize and validate all Service component requests for common-user airlift within the theater. The agent aligns requests with theater priorities. If the agent validates a request, he designates it as an airlift/airdrop requirement.

The agent then tasks the Air Force component commander who in turn passes the tasking to the Air Force C2 agency to support the requirement. They, in turn, will task an Air Force unit to execute the mission (see Figure 7-12).

The theater combatant commander's agent is normally subordinate to the JMC, when established. Airlift requests, or apportionment, are executed according to the theater combatant commander's priorities and are not normally changed below the component command level. The theater combatant commander may establish a JTB to resolve conflicts between the Service components regarding airlift.

As with Army aviation requests, Air Force requests are either preplanned or immediate. Within the immediate category, requests can be noted as emergency requests. Air Force airlift/airdrop requirements can begin at any level either as a request for Air Force airlift or airdrop or as a request for transportation that movement managers determine can best be satisfied using airlift or airdrop. Requests can either be preplanned, immediate, or emergency.

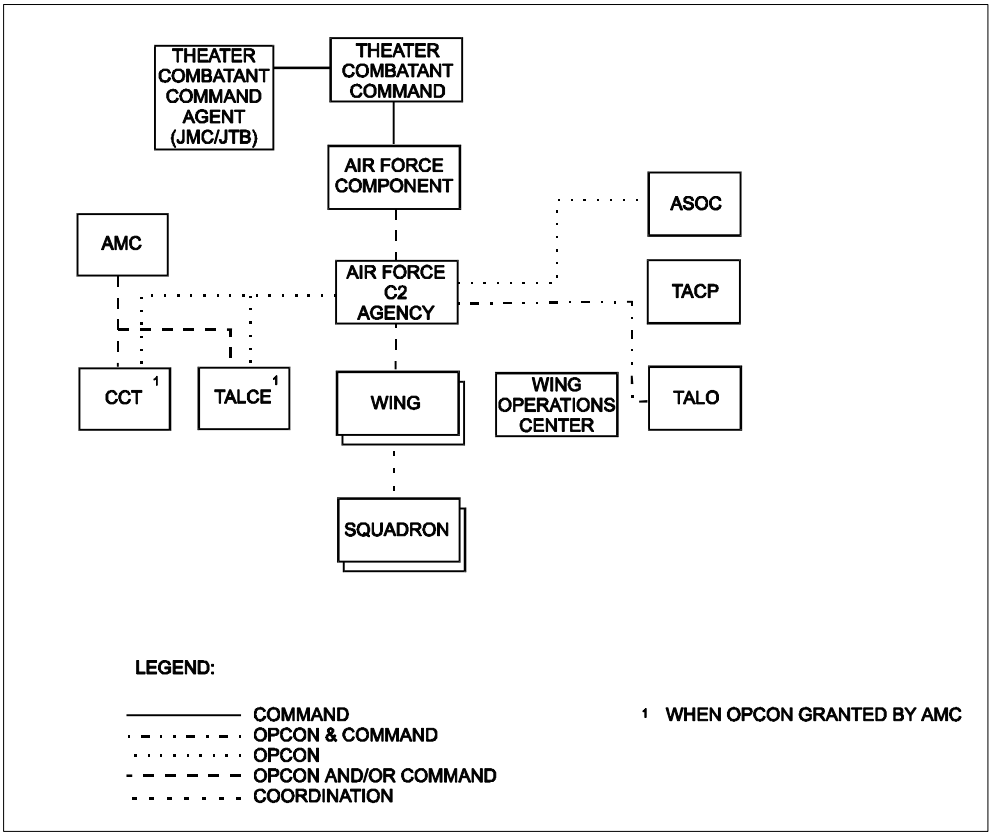

Figure 7-12. Air Force Airlift Organization

- *Preplanned requests.* Preplanned airlift missions are based on known or projected requirements and are programmed in advance per command directives. They include requirements to provide airlift of personnel, cargo, mail, and courier materiel on a regular, routine basis or to meet one-time requirements. The amount of time required to coordinate preplanned airlift is established by the Air Force component based on operational requirements and the capability of the available airlift apportioned by the theater combatant commander. Preplanned airlift requests are validated through movement control channels (see Figure 7-13, page 7-36).

  - Division. The MCO receives transportation requests which are reviewed to determine the most effective mode. If the MCO decides that Air Force airlift or airdrop is the most effective mode, the MCO coordinates with the requestor and forwards requests to the DTO as Air Force airlift requests. The DTO coordinates details of each request with the TALO, validates each request, and forwards them to the Corps MCB. The TALO acts as a coordinator and assists with the preparation of the request. The TALO also provides early notification and coordination through Air Force channels.

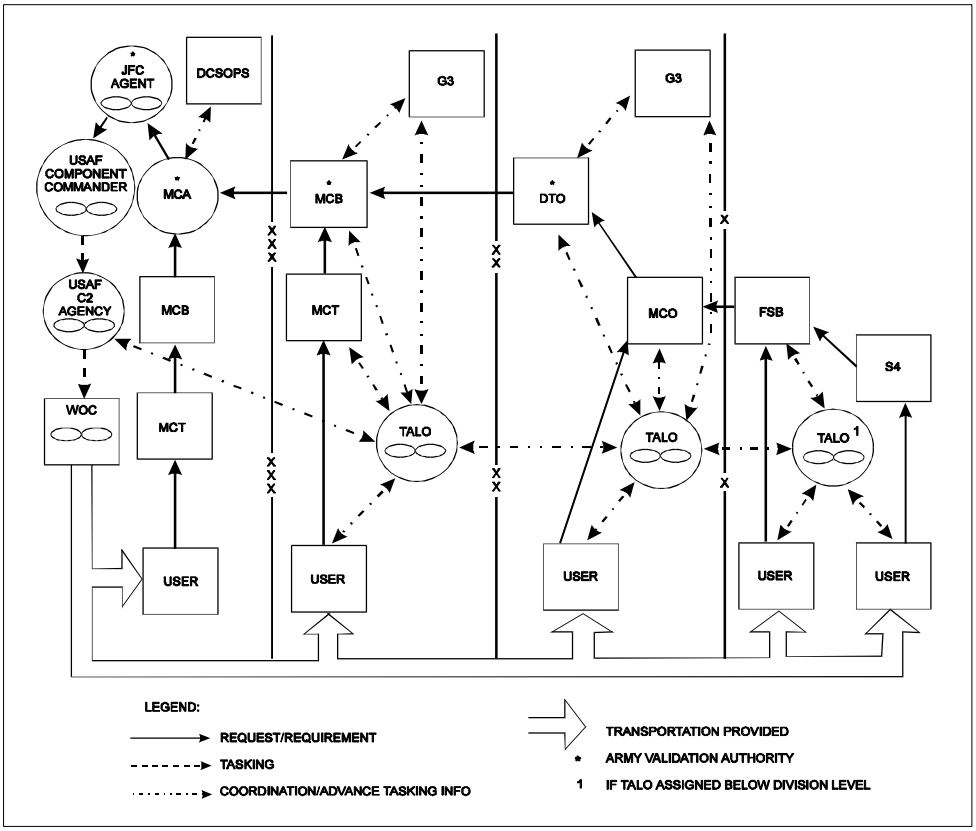

Figure 7-13. Preplanned Airlift Requests (Air Force)

- Corps. The Corps MCB receives transportation or airlift requests from Corps units or validated airlift requests from DTOs and either validates each request or selects an alternate mode. If the Corps MCB validates a request, it forwards the request to the MCA. If the Corps MCB does not validate a request, it selects another mode. The CTO integrates airlift requirements for logistics and other intratheater movement to support priorities established by the G3.
- EAC. The MCA receives transportation or airlift requests from units located in the COMMZ or validated requests from Corps MCB. The MCA either validates each request or selects an alternate mode. If the MCA validates a request, it forwards the request to the theater combatant command agent. The agent validates the request for the theater combatant commander and passes the request as a requirement to the USAF C2 agency. TALOs are located at each echelon. TALOs provide early warning to USAF C2 agencies that an Army request for Air Force air is in the validation process. If the request is not validated at any level, it will be returned to the originator for alternate mode selection.

- *Immediate requests.* Unanticipated or urgent ground force requirements and priority transportation requests are validated and passed as immediate airlift requests. Immediate request validation is expedited through command channels. The TALO, attached to the lowest echelon closest to the requesting command, notifies the USAF C2 agency of the impending

request through an advance notification net. Coordination between the S3/G3 and S4/G4 ensures that movement control channels are kept current on airlift request status. The USAF C2 agency will execute validated immediate airlift requirements by directing an alert sortie to launch or, if the urgency of the situation warrants, by diverting a mission in progress. Immediate airlift requests will not be supported without validation by the Army and the theater combatant command agent.

- *Emergency requests***.** These requests are special types of immediate requests for requirements that are critical to accomplish the tactical mission or for unit survival. These missions are the highest priority established by the JFC. The immediate airlift request validation procedure is required for emergency requests.
- *Air lift requests***.** The format for airlift requests should be submitted using an approved message format as described in FM 100-27 or DD Form 1974, Joint Tactical Airlift Request. Command specific formats must include the minimum essential information listed in these formats.

7-30. CLEARANCE REQUESTS. Units needing to move on controlled routes that require a movement credit must request and receive clearance before beginning movement. The request is submitted through the chain of command to the DTO or Corps/EAC MCT within whose area the movement originates. In the Corps, the MCT forwards the request to its servicing highway traffic division. In the COMMZ, the MCT forwards the request to its MCB. Based on procedures established in SOPs, the request may be transmitted in hard copy, electronically, or verbally.

The DTO, HTD, or MCB reviews requests and considers them based on command priorities for the type of movement and the unit requiring movement. Priorities for types of movements are normally specified in SOPs, OPLANs, or OPORDs. They include categories such as unit movement, movement of reserves, logistical movement, and movement of replacements. Unit or task force priorities are specified in OPLANs and OPORDs. Unit priorities are based on the commander's requirements to meet the tactical situation. These priorities frequently change. Movement planners must anticipate changes and frequently obtain planning guidance from the G3 and G4.

The DTO or HTD either schedules the movement as requested or notifies the unit if it cannot be granted. The DTO or MCT will coordinate with the lower priority requestor to reschedule the move at a different time or on a different route. If conflicts arise during planning that cannot be resolved by the DTO or HTD, they must seek resolution of the priority conflict through the staff that approved the priorities.

Movement credits are returned to the requesting unit through the same channels used for the request. Information on all movement credits issued is provided to the PM, MP units, and MRTs for traffic control and movement regulating purposes.

The movement credit gives the requesting unit the authority to move on a controlled route. The credit is a control number. Policies for developing the codes used for movement credits are governed by command directives. Movement credits normally include a command identifier, Julian date, and sequence number. For example, a unit of the 54th Infantry Division will move on Julian date 043. The credit was the third issued for that date. The movement credit would be 54-043-003. Additional codes may be added after the sequence number to further identify the unit or type of movement. Command directives normally prescribe that moving units chalk the movement credit on the sides of their vehicles to identify that the movement is authorized.

7-31. COORDINATING MOVEMENTS. Movement control organizations must coordinate the planned movement of convoys on controlled MSRs in order to issue movement credits, reroute, or divert. They must also monitor the in-transit status of some convoys on controlled routes to find out if movements are going according to scheduling. This does not require monitoring every convoy, but should include monitoring certain critical points or CPs. The function can be performed by either MRTs or MPs. Both require communications capability to relay information.

Without positive control measures and monitoring, the MSRs may become congested and movements will be delayed. Planners, when coordinating movement bids, must be able to visualize the location of convoys at any time and know when they should arrive and clear CPS.

7-32. DIVERTING AND REROUTING. Movement planners in the MCO and HTD must monitor the in-transit status of convoys to find out if movements are going according to scheduling. They are also the focal point for diverting and rerouting, and must be able to communicate with MRTs and MPs to enforce control measures on MSRs or to divert and reroute. SOPs must provide detailed guidance for coordinating and disseminating information.

Traffic disruptions may be caused by enemy action that destroys bridges, damages MSRs, or contaminates MSRs. They may also be caused by refugees clogging an MSR. Movement planners must also anticipate traffic disruptions caused by congestion due to breakdowns, weather, and degradation of road surfaces. They also request route repair, decontamination, and traffic control support. Movement planners advise the G3 and G4 of any actions required to reduce the impact of disruptions.

Movement planners must continuously seek out information from other staff sections to make assessments. In addition to receiving reports from MCTs and MRTs, they must coordinate regularly with the G2, G3, and PM to obtain current information as reported through command channels.

Upon receiving reports of problems on an MSR, the movement control organizations can progressively adjust traffic plans. They can issue instructions to hold unit movements that have not begun, issue new routing instructions, or hold unit movements at a staging area or CP if the movement has begun.

7-33. LARGE UNIT MOVEMENTS. Large unit movements must be quickly executed. Coordination is critical during planning to open routes for movement and to reschedule previously planned movements.

Maintaining logistical support and uninterrupted transportation to other supported units in conjunction with large unit moves requires continuous coordination. Large unit movements will normally be planned by the moving units under parameters defined by the G3 and/or movement control headquarters. This depends upon their location and whether the movement commits the forces or moves them from one assembly area to another. Planning for movement of large units consists of four concurrent steps:

- Determining the requirements for the move.

- Determining the timeframe for the move.
- Analyzing organic and nonorganic movement capabilities.
- Establishing movement priorities.

The fundamental precepts of METT-TC drive the planning for large unit movements as they form the base requirement for the time and space factors characterizing the movement. The following factors are considered:

- Task organization of units, current location, and concentration.
- Adequacy of routes to support vehicles and tonnages.
- Available assembly areas and transportation modes at origin.
- Control measures, coordination, and logistics support for the movement and at destination.
- Assembly areas at destination.
- Deception measures before and during the movement and at destination.
- Enemy situation, route and geographic conditions, and weather.

Preplanned movements must be reevaluated in terms of their priority in relation to the unit movement. Critical supplies may have to be pre-positioned or moved by alternate modes such as air, rail, or inland waterway if they are available. En route logistics support such as ROM, maintenance, and life support must be pre-positioned. Traffic control and MRTs must also be pre-positioned.

HETs may support the movement. Using HETs to move heavy forces increases the capability of the maneuver commander to quickly and efficiently relocate forces. They can assist in moving the maximum amount of combat power to the decisive point and time to attain or keep the initiative and have forces arrive in a high state of readiness. Using HETs will be governed by their availability, the conditions of the road network, and the distance to be traveled.

Highway Regulation planning must be extensive and thoroughly coordinated. Critical road junctions must be identified and managed. Less critical movements must be rerouted, delayed, or shifted to alternate modes. Engineering may be required to upgrade routes or to construct bypasses or bridges. Scheduling guidance must be provided to the moving units. This guidance allows the units to conduct their internal planning for the movement. The main factor will be the availability of routes. Movement planners can use the following scheduling techniques:

- Creating reserved routes for particular units.
- Using location or column scheduling to allocate time blocks for movement if units share routes.
- Developing movement tables if routes are limited and the requirement for control is greatest (see Appendix E).

Detailed movement tables are necessary for smaller units to execute their portion of the plan. However, the moving unit can develop these plans based on the allocation of routes or time blocks. Movement control organizations will not normally develop detailed movement tables for large unit movements.

EXAMPLE HIGHWAY REGULATION PLAN

1. PURPOSE. The Highway Regulation Plan is used to inform all units within the theater of operations of the policies and procedures governing convoy or oversize/overweight vehicle movements.

2. SCOPE

a. Highway Regulation Plan should be developed for all OPLANs or exercises and be included within the Transportation Annex of the applicable OPLAN or exercise directive.

b. It is the responsibility of all organizations with a wartime Highway Regulation mission to develop Highway Regulation Plans. Responsible organizations include DTOs, MCBs, and MCAs

c. Whenever two or more regulating agencies operate in the same theater of operation, coordination to standardize policies and procedures must be accomplished. Development of the Traffic Circulation Plan must also be coordinated to ensure mutual use MSRs are given one name throughout the theater to avoid confusion. Movement priority codes and other policies and procedures must be standardized.

3. RECOMMENDED FORMAT AND INFORMATION FOR THE HIGHWAY REGULATION PLAN

ANNEX ____ HIGHWAY REGULATION PLAN TO OPERATION____
Reference: Maps, Traffic Circulation Plan, and other relevant documents.
Time zone used throughout the order
Dates: Julian for COP system (movement request dates)

1. SITUATION
Include information affecting movement.

2. MISSION
Include provisions of effective highway regulation, reporting, support of operations, and coordination of movement and maneuver. Identify responsible organizations (who controls routes).

3. EXECUTION

a. Concept of movements. Briefly state the Highway Regulation concept and coordination of movements and maneuver and battlefield circulation control.

b. Tasks to subordinate units.

(1) Units perform route reconnaissance or get information from TCP pertaining to theater route network.

(2) Units responsible for abiding by all policies and procedures listed in the plan.

c. Coordination of use of MSRs.

(1) Request procedures.

(a) Convoy Request Form or oversize/overweight request form. Put example(s) at appendix. Identify required data (mandatory). Hazardous cargo and oversize/overweight information must be put in remarks. Round trip, use request form with stopover time.

(b) Submit to. Identify locations units will submit convoy movement requests or oversize/overweight. Telephone procedures/telephone numbers, FAX, walk in locations, MCT, system modem numbers, and so on. Hours of operation.

(c) Submit when. How many days before movement peace/war, emergency procedures, and authorization.

(d) Convoy movement priorities. Use numbers 1: highest priority and so on. Coordinate with all clearance activities to use same number system.

(e) Minimum number of vehicles that constitute a convoy.

(f) Infiltration rules (less vehicles than a convoy). Ensure infiltrating vehicles yield to convoys at intersection and do not hinder convoy movement.

(g) Special movement consideration information must be entered in remarks on the request for movement form.

(2) Route utilization information. Discuss MSR listed in TCP. Explain controlled versus MSR (open).

(a) MSR listed on TCP is open route, any unit can use. No clearance required. First come, first serve. Minimum speed on MSR and any restrictions. Direction of travel.

(b) Controlled route. Listed in TCP (same as dispatch route). Convoy request must be submitted and a clearance issued prior to movement. Minimum speed for controlled routes and any restrictions. Direction of travel.

(c) Supervised route. Identify route(s) rules and procedures.

(d) Prohibited route. Identify which route in TCP or not on TCP is prohibited.

(e) Reserved route (identify who can use and duration).

(f) Lightlines.

(g) Hardening of vehicles.

4. SERVICE SUPPORT

a. Provide logistical support request procedures. Rest, refueling, and so forth. The TCP (text version) identifies convoy halt locations, facilities, and services available to include units responsible for providing service.

b. Maintenance and recovery procedures. Vehicle breakdown procedures.

c. Medical evacuation procedures.

d. Halts.

5. PROCEDURES. (Note: Should be same information as in system parameter table.)

a. Planning factors (convoy).

- Distance between vehicles.
- Time gap between march units/serials.
- Time gap between convoys.
- Oversize/overweight criteria. Procedures to submit request for clearance.
- Vehicles per march unit.
- March units per serial.
- Blackout procedures/light lines.
- Hardening of vehicles.
- Convoy/hazardous cargo marking/flags.
- Delay in meeting SP time procedures.

b. Planning factors (route information). Refer to TCP for location and type routes, halt locations and services, traffic control point locations, critical point locations, and restrictions.

6. ENFORCEMENT. Include command actions that will be taken in the event units do not follow policies and procedures. Stress the requirement that units must have approved march table/movement order prior to using controlled routes. Identify who will monitor and control movements.

7. COMMAND AND SIGNAL.

a. Command. Identify communications reporting locations and procedures with Highway Regulation and police officials.

b. Signal. Describe reporting requirements, method of communication, and radio frequencies.

APPENDIXES:
Traffic Circulation Plan (text copy attached and system disk distributed to system users)
Convoy Request Form and Oversize/Overweight (same form)

APPENDIX A

COMMUNICATIONS AND AUTOMATION

A-1. INTRODUCTION. Communications and automation for future military operations must focus on joint operations. The days of single service systems will no longer exist. The JTCC assessed the functional, technical, and programmatic capabilities of existing transportation systems. Some were selected as migration systems, functionality integrated into the DTS, and others were selected as Legacy systems, functionality replaced.

The JTCC goal was to eliminate unnecessary duplication, save resources, retain required functionality, and improve the DTS. The recommendations of the JTCC ultimately changed movement control operations. This appendix will discuss movement control automation systems and how they communicate.

A-2. MOVEMENT CONTROL AUTOMATION CAPABILITY. A system known as TC-AIMS II was selected as the system to improve movements management. TC-AIMS II contains the functions of UMO; ITO/TMO; and Air, Ship, and Rail Load Planning.

TC-AIMS II consolidates the management of ITO/TMO, unit movement, and load planning operations using common hardware and software applications designed for easy retrieval data exchange and connectivity to external sources. It will interface with all key joint and Army transportation automation systems to improve the interoperability between service systems supporting transportation operations.

Table A-1, page A-2, is a list of key transportation systems. It is not all inclusive and will be updated as new systems evolve. Warfighters and Military planners must have the capability to monitor, plan, and execute all phases of the force projection cycle: Peacetime Operations, Deliberate Planning, Crisis Planning and Execution, and Follow-On Operations. The development and integration of automated information systems will meet this requirement. The following paragraphs will briefly discuss each major transportation automation system.

a. Automated Air Load Planning System/Air Load Module. The AALPS/ALM is a knowledge-based system that assists with loading military cargo aircraft for large-scale air deployments. It is designed to serve four basic functions: generate valid air load plans; generate and validate user defined air load plans; modify existing air load plans; and track movement statistics during actual deployments. AALPS/ALM has the capability to air load plan an Army division of 15,000 soldiers and 5,000 pieces of equipment in less than three minutes. AALPS/ALMs will interface with TC-AIMS II and GTN.

b. Automated Movement Flow Tracking. AMFT is a software tool that provides automated support for deployment planning and execution. It also develops deployment schedules, updates and modifies chalks, creates and prints movement flow tables, and is capable of sending electronic messages.

c. Consolidated Aerial Port System II. CAPS II provides information on cargo at aerial ports waiting for air shipment, cargo manifested for air, and cargo which departed from aerial ports by ground or air.

Table A-1. Transportation Automation Systems

AALPS	Automated Air Load Planning System
ALM	Air Load Management
AMFT	Automated Movement Flow Tracking
CAPS II	Consolidated Aerial Port System II
CFMS	CONUS Freight Management System
CMOS	Cargo Movement Operations System
CSSCS	Combat Service Support Control System
DAMMS-R	Department of the Army Movements Management System-Redesign
GCCS	Global Command and Control System
GCCS-A	Global Command and Control System-Army
GCSS-Army	Global Combat Support System-Army
GOPAX	Groups Operational Passenger System
GTN	Global Transportation Network
IBS	Integrated Booking System
ICODES	Integrated Computerized Deployment System
JOPES	Joint Operations Planning and Execution System
MTS	Movements Tracking System
RFID	Radio Frequency Identification
STACCS	Standard Theater Army Command and Control System
TC-AIMS II	Transportation Coordinators Automated Information for Movements System II
TC-ACCIS	Transportation Coordinators Automated Command and Control Information System
WPS	Worldwide Port System

d. Cargo Movements Operation System. CMOS provides traffic management information to the Air Force for freight movement and unit deployments. It supplies actual air cargo and passenger information for planning, command and control, and ITV.

e. Combat Service Support Control System. CSSCS is designed to collect, analyze, and disseminate critical logistical, transportation, medical, financial, and personnel information. CSSCS will receive data directly from TC-AIMS II and GTN.

f. Global Command and Control System. GCCS provides combat commanders with a single source of secure information. It assists joint force commanders with coordinating air, land, sea, space, and special forces operations of widely dispersed units in fast moving operations. It is flexible enough for combat operations or humanitarian assistance missions. GCCS integrates deliberate and crisis action planning, force deployment and employment, fire support, air operations and planning, intelligence, and force status. It is designed to allow the expansion of planning and execution capabilities as new systems are designed. GCCS is based on a COE allowing greater software flexibility, reliability, and interoperability with other automated systems. Commanders can establish their own secure homepage and communicate through worldwide using E-mail.

g. Global Command and Control System-Army. GCCS-A provides a single seamless command and control system built around the JOCE. It is integrated with the DOD GCCS. GCCS-A is fundamentally GCCS with additional Army specific functionality. It is an integral part of a coordinated DOD and Joint Technical Architecture-Army that provides information support to all military command levels.

h. Groups Operational Passenger System. GOPAX provides an automated electronic capability for the arrangement of commercial transportation for DOD, group, and unit troop movements. GOPAX interfaces with all TC-ACCIS sites using the DDN. GOPAX has links with the Navy, Marine Corps, National Guard, and AMC.

i. Global Transportation Network. GTN is an automated command and control system used for collecting transportation information from selected DOD systems. It provides automated support for planning, providing, and controlling common user airlift, surface, and terminal services to deploying forces. It provides the user with the ability to track the status, identity, and location of DOD unit and non-unit cargo and passengers, medical patients, and personal property from origin to destination. GTN also does the following:

- Provides ITV information about units, forces, passengers, cargo, patients, schedules, and actual movements.
- Displays current operational asset information and provides transportation intelligence information on airfields, seaports, and transportation networks using graphics and imagery.
- Provide future operations information and models to support transportation planning and courses of action.
- Provides efficient routing for patient movement and will provide ITV of individual patients.
- Interfaces with CAPS II, CFMS, CMOS, DAAS, DTTS, GCCS, JOPES, GDSS, METS, PRAMS, TC-ACCIS, TC-AIMS II, and WPS.

j. Integrated Booking System. IBS is the lead execution system for the DTS to move international cargo. IBS provides a single, worldwide, automated booking system to move military cargo. IBS allows DOD shippers to automatically process movement requests directly using MTMC booking offices. IBS automatically determines the “best value” ocean carrier supporting the move. IBS supports the deployment, employment, and sustainment. IBS interfaces with the ocean carrier industry, WPS, and GTN.

k. Integrated Computerized Deployment System. ICODES is an automated information system that develops stowage plans for deployments. It has the capability to predict problems and design alternative solutions. ICODES is designed to support division-sized mobilization and cargo planning across the available fleet of ships. It supports multi-ship planning while maintaining unit integrity. ICODES is responsive to unplanned changes and contingencies. It can operate either as a stand alone system or in a shared mode. It will interface with TC-AIMS II and WPS.

l. Joint Operations Planning and Execution System. JOPES combines individual service terminology into one standard system. It standardizes the joint planning system used to execute complex multi-service exercises, campaigns, and operations. JOPES furnishes joint commanders and war planners, at all levels, standardized policy procedures and formats to execute a variety of required tasks. It assists planners in development of OPLANs, CONPLANs, functional plans, campaign plans, and OPORDs. JOPES is used for TPFDD management and development. It defines requirements and gains visibility of the movement of combat forces into the combat commanders' area of responsibility. JOPES is more than a computer, it is a system. The JOPES ADP resides in the computer network of the GCCS. Together, this system assist planners with the development of detailed deployment requirements, logistics estimates, transportation requirements, and assessment of the OPLAN for transportation feasibility. It also tracks, plans, prioritizes, and monitors deployment status and requirements. For a more detailed description of JOPES, refer to the JOPES User Guide, 1 May 1995).

m. Movement Tracking System. The MTS provides automated tracking of containerized cargo and vehicles. It provides fleet monitoring using vehicle map displays, censors, communications log storage and retrieval capability, and remote monitoring worldwide.

n. Radio Frequency Identification. RFID uses radio wave transmission and reception to identify, locate, and track objects. Information is stored on a RF tag with media storage capability similar to a computer floppy disk. Antennas, commonly called interrogators, read and pass information contained on the RF tag attached to vehicles, containers, or pallets. This information is passed to a central database. A RF tag is attached to all major shipments in theater. RF interrogators are located at key transportation nodes to provide visibility of the shipments en route to final destination. MTS will integrate RFID technology to provide total visibility of intransit cargo.

o. Standard Theater Army Command and Control System. STACCS provides replicated databases with common situation maps, communications, man-made interfaces, briefing systems, and commercial off-the-shelf software to theater commands and major subordinate commands. It is interconnected with strategic (AWIS) and tactical communications (MCS).

p. Worldwide Port System. WPS is the primary source system for intransit and TAV of surface cargo movement in the DTS. WPS provides timely and accurate information to the supporting and supported CINCs through the GTN. Upgrades to WPS will include a ship load planning module capable of concurrent planning for multi-ship operations.

q. CONUS Freight Management System. CFMS provides an automated, electronic capability for the procurement of commercial freight transportation services. It covers freight shipments at all sources. It provides the central DOD database for filing all commercial freight transportation rates and services. It provides automation support for preparing freight shipping documents, carrier selection, electronic filing of GBL, prepayment, shipment status, quality control, and intransit visibility. The CFMS interfaces with GTN and the defense transportation tracking system for shipment status and GBL maintenance.

r. Transportation Coordinator Automated Command and Control Information System. TC-ACCIS automates the transportation functions of unit movement planning, execution, ITO. It provides accurate and timely movement information to the Army and joint deployment community for the deployment of active and reserve component units. When TC-AIMS II is fielded, it will replace TC-ACCIS.

s. Department of the Army Movements Management System-Redesign. DAMMS-R provides automation support for transportation staffs and organizations within a tactical theater of operations and the continental United States. It is a vital link in the maintenance of ITV over units, personnel, and material. DAMMS-R interfaces with all STAMIS, all services, and all foreign governments of the countries where the Army is deployed. DAMMS-R consists of seven modules. These modules are: system management, mode operations, movement control team operations, highway regulation, convoy planning, operational movements programming, and transportation addressing.

t. Transportation Coordinators Automated Information for Movements System II. TC-AIMS II is a joint system that combines and integrates the functionality of CMOS, TC-ACCIS, DAMMS-R, USMC MDSS, and the USMC TC-AIMS automation systems. TC-AIMS II brings these legacy systems into one single automated system, used for all the services. TC-AIMS II is used by all the services for unit movement functionality, ITO/TMO, and mode management. With TC-AIMS II, the user has the capability to do the following:

- Build AUEL and DEL from retail supply and personnel systems.
- Plan convoys.
- Request convoy clearances.
- Request transportation support.
- Conduct mode load planning.
- Manage mode operations.
- Update strategic and operational command and control systems.
- Maintain ITV.
- Execute daily operations of the ITO/TMO.

A-3. MOVEMENT CONTROL COMMUNICATION. Reliable communications capability is critical in obtaining the objectives of Focused Logistics. Movement control commanders must be folded into the warfighter's communications net in order to maintain the same OPTEMPO of the warfighter. Situational awareness is critical to providing timely support through anticipatory logistics. Movement Control commanders need reliable long-range communications capability in order to command and control, or direct the activities of their subordinate executing elements which doctrinally operate 50 to 500 miles apart across the battlespace. Just as combat commanders require reliable communications to focus combat power to execute dominant maneuver and precision engagement, movement control commanders must have the same communications capability to focus logistics power and conduct force tracking. Without this capability, we put at risk the combat commander's confidence in the logistics process and the Army's ability to reach the objectives of our force projection strategy. Communications equipment required by transportation movement control units includes radios, telephones, and satellite terminals.

a. Radio Communications. The communication requirements of the unit's mission determine the type and extent of radio facilities required. The radios are mounted in vehicles organic to the unit. Movement control units typically require long-range FM radio sets. These sets are used for mobile operations or to supplement common-user communications facilities. Long-range high frequency radio sets are required to permit communications between movement control command and control elements and its subordinate elements, which often operate at remote locations great distances from its higher HQ.

Movement control commanders, S-3s, command posts, and operations sections require dual long-range FM radios or dual short/long-range FM radios. Typically, one radio is used to monitor the higher HQ command/operations net, and the other is used to participate in the element's own unit net, and to command and control elements operating away from the unit area.

b. Telephone Communications. Digital nonsecure voice telephones are a quick, efficient means of communication. Movement control HQ elements, command posts, operations and highway traffic division sections, maintenance sections, and detachments all require wire subscriber access. Additionally, facsimiles, STAMIS, and other types of automated information systems interface with the DNVT's data port. Commanders and key personnel require MSRT to allow them access to their staff and functional personnel while mobile.

c Satellite Communications Transportation Movement Control units are essential to the efficient use of the Theater's limited Transportation assets. Movement Control units regulate the flow of units and materiel, and report the progress of units and materiel across the Transportation system. These units require reliable long-range voice/data communications to ensure communications with shippers, mode operators, customers and subordinate executing elements from 50 to 500 miles away (for example MSR Dodge in SWA). The mission of the MCTs requires them to disperse and operate throughout the distribution network at various operational nodes and locations such as hubs, APODs, SPODs, and along MSRs. The MCTs doctrinally operate autonomously at remote locations that are great distances from the MCB HQ. Many of these sites are out of the MSE/Signal grids. Tactical and commercial SATCOM provides these units with their required non-line of sight, long-range communications capability for command and operational control. Additionally, movement management automated information systems use SATCOM to send and/or receive data used to process lift requirements, manage and coordinate movements, plan and execute deployments/redeployments, and to conduct force and asset tracking.

Force projection missions require early identification and establishment of APODs and SPODs. "First to support" movement control units that are part of a TOFM include the MCA EEM, Corps and EAC Movement Control Battalions, and Movement Control Teams. SATCOM provides these units full operational communications capability that they require immediately upon arrival in theater (even before the first vessel or aircraft arrives) to conduct reception, staging, and onward movement of units, their equipment, and supplies. Other transportation units that are part of a TOFM that need to be able to receive movement requests from movement control units include the TRANSCOM (EEM), Transportation Terminal Battalions, and Transportation Motor Transport Battalions. Therefore, they also require the same SATCOM devices to coordinate these activities.

At the strategic level, movement control command and control elements, responsible for coordinating strategic lift in an austere environment, require satellite-based voice and data communications with CONUS. This helps obtain the information required to plan, program, and execute reception, staging, and onward movement of arriving forces.

d. In-transit Visibility. Movement control elements require the MTS to determine the location and communicate with tactical wheeled vehicle assets located throughout the battlespace. MTS is a satellite based tracking/communication system consisting of a mobile unit mounted in the vehicle and a base unit station (referenced as Movement Tracking System-Controller Station or MTS-CS) controlled and monitored by movement control operators. MTS and MTS-CS are nondevelopmental items that incorporate GPS, automatic identification technology, non-line of site message capability between the mobile and base systems, and mapping technologies. MTS primary function is to allow command and control and movement control personnel to track, locate, and communicate with in-transit transportation vehicles at a near-real time basis anywhere on the battlefield. It will allow the movement control community the ability to redirect and divert all prime movers mounted with MTS based on changing battlefield requirements and tactical unit relocations, thus providing velocity to a transportation-based distribution system. MTS can also provide an embedded movement control capability that can improve the distribution flow on MSRs, thus reducing the prospect of fratricide. Movement control personnel can directly communicate with drivers anywhere on the battlefield, thus warning them of dangers, submitting new tasks, and redirecting them around route obstacles and congestion. Integrating the automatic identification technology into MTS will provide visibility of the cargo that the vehicle is transporting.

APPENDIX B

GEOGRAPHICAL CONSIDERATIONS

B-1. INTRODUCTION. This appendix contains general descriptive information for selected Unified Commands and is only current as of the publication date of this FM. The information is subject to change with the fielding of TC-AIMS II; other innovative operating systems; or changes in command relationships, organizations, or alignments.

Section I. United States Central Command

B-2. USCENTCOM Area of Responsibility. The SW Asia region is a large, diverse area. The population is over 316 million with 17 different ethnic groups, 420 major tribal groupings, 6 major language groupings, hundreds of dialects, and 3 major religions. The command's AOR begins in the east with Pakistan and includes Afghanistan, Iran, Iraq, and Jordan on the Asian continent, the entire Arabian peninsula, and Egypt, Sudan, Ethiopia, Djibouti, Somalia, and Kenya on the African continent. It includes the waters of the Red Sea and Persian Gulf (Figure B-1, page B-2).

HNS potential ranges from good to nonexistent, depending on the specific country involved. LOCs also vary from the few regularly used in support of pre-positioned supplies, equipment, and personnel; to those used periodically for exercises; to those identified but not used due to political considerations.

US forces apportioned to USCENTCOM are unique; there are few permanently forward-deployed forces in the area. Those consist mainly of US Navy Central Command or US Marine Central Command missions. The OPLAN and TPFDD identify the vast majority of forces.

B-3. USCENTCOM COMMAND RELATIONSHIPS. The TUSA, located at Fort McPherson, GA is the Army component command for USCENTCOM. It provides planning guidance for Army units that could be deployed in wartime.

The Third MCA serves as executive agent for movement control into, within, and out of the ARCENT area of responsibility. It commands and supervises assigned and attached units in support of the ARCENT mission and coordinates with HN and allied forces (Figure B-2, page B-3). USCENTCOM may also direct the use of the ARCENT movement control structure to support all ground movement in the USCENTCOM AOR to include support of all component commands.

Section II. United States European Command

B-4. USEUCOM Area of Responsibility. The USEUCOM AOR is large and diverse. It encompasses 13 million square miles, extends from Norway to the south of Africa (less the area assigned to USCENTCOM), and includes 76 countries (Figure B-3, page B-4). Within the central European region of NATO, the USEUCOM AOR includes Germany, Belgium, Luxembourg, Netherlands, Denmark, Italy, France, and the United Kingdom.

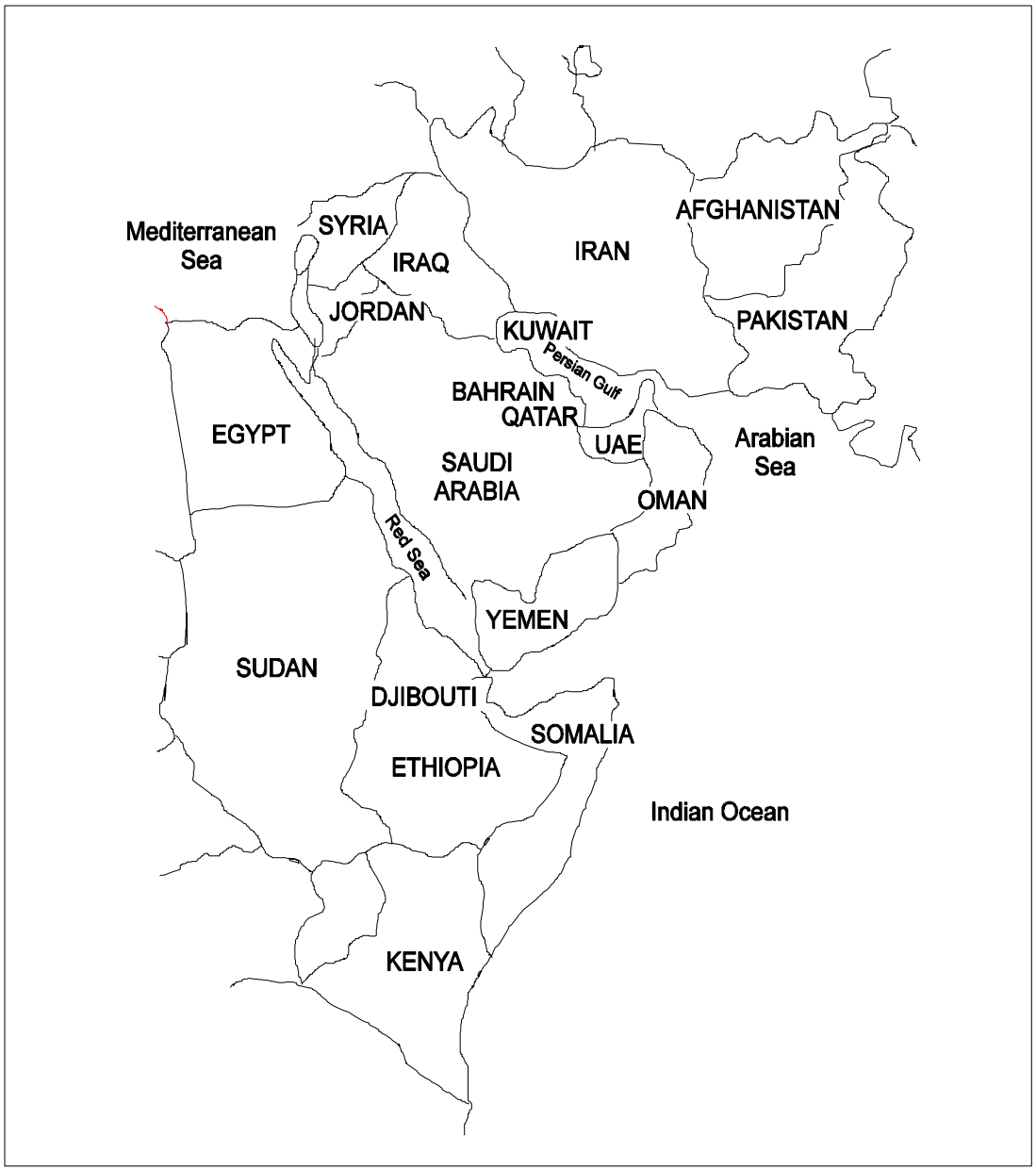

Figure B-1. USCENTCOM Area of Responsibility

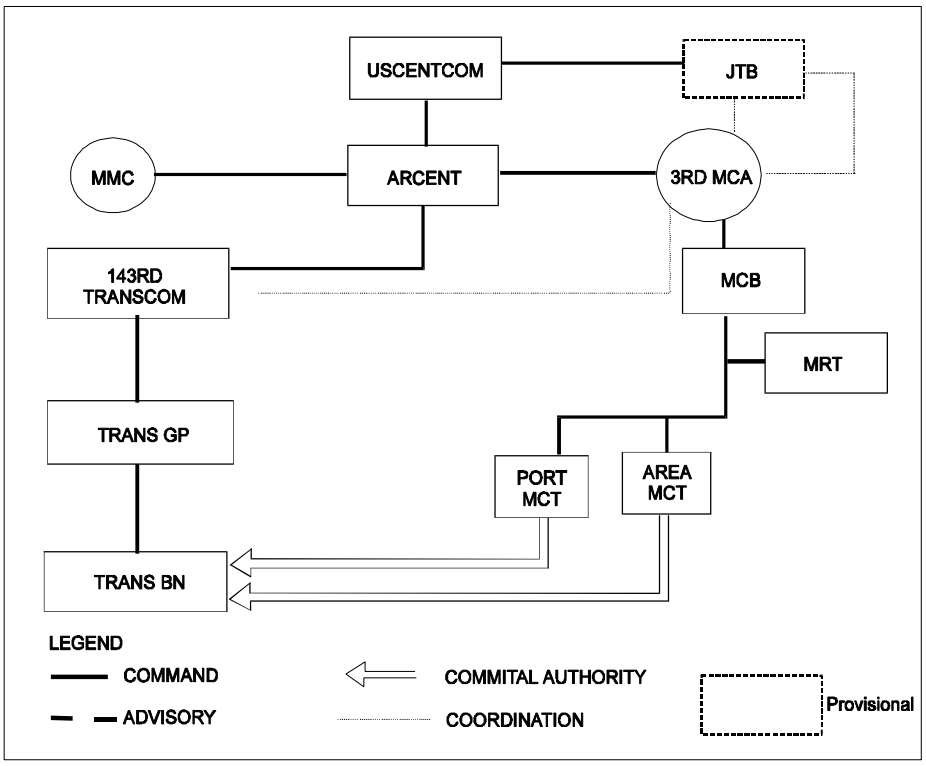

Figure B-2. Command Relationship

B-5. USEUCOM COMMAND RELATIONSHIPS. USAREUR's movement manager is the 1st TMCA headquartered in Kaiserslautern, Germany. It is assigned to the 21st TAACOM. The 1st TMCA supports US forces in northern, central, and southern Europe.

USAREUR's mode operator is the 37th TRANSCOM headquartered at Kaiserslautern, Germany. The 37th TRANSCOM is assigned to the 21st TAACOM. The 1st MCA exercises committal authority over transportation assets of the 37th TRANSCOM. The 37th TRANSCOM commands one subordinate transportation battalion (28th Transportation Battalion, headquartered in Mannheim).

MTMC Europe, a subordinate command of MTMC, operates common-user ocean terminals in direct support of USEUCOM. MTMC Europe can open military terminals at other locations based on operational requirements.

B-6. MOVEMENT CONTROL ORGANIZATIONS. Figure B-4, page B-5, shows the organization of the 1st MCA. It has three transportation battalions (MC) and two movement regions assigned.

Within the European theater, MCTs have theater-unique teams assigned to them. They include the following:

a. Branch Movement Control Team. The BMCTs are the smallest movement control elements providing movement control on an area basis. BMCTs are assigned to specific location support, such as depots, TTPs, or trailer terminals. BMCTs provide interface with the consignor, consignee, and mode operator.

b. Highway Movement Control Team. The HMCTs are responsible for coordinating US forces use of HN road networks. HMCTs are collocated with the German Verkerskommandtur (transportation commander's) office.

c. Rail Movement Management Team. The RMMTs are responsible for the control of US forces cargo and passengers moving via the German federal railroad, Deutsche Bundesbahn.

B-7. STANDARDIZATION AGREEMENTS. USAREUR uses standardized forms to implement the provisions and data/information of exchange requirements NATO STANAGs and AMovPs.

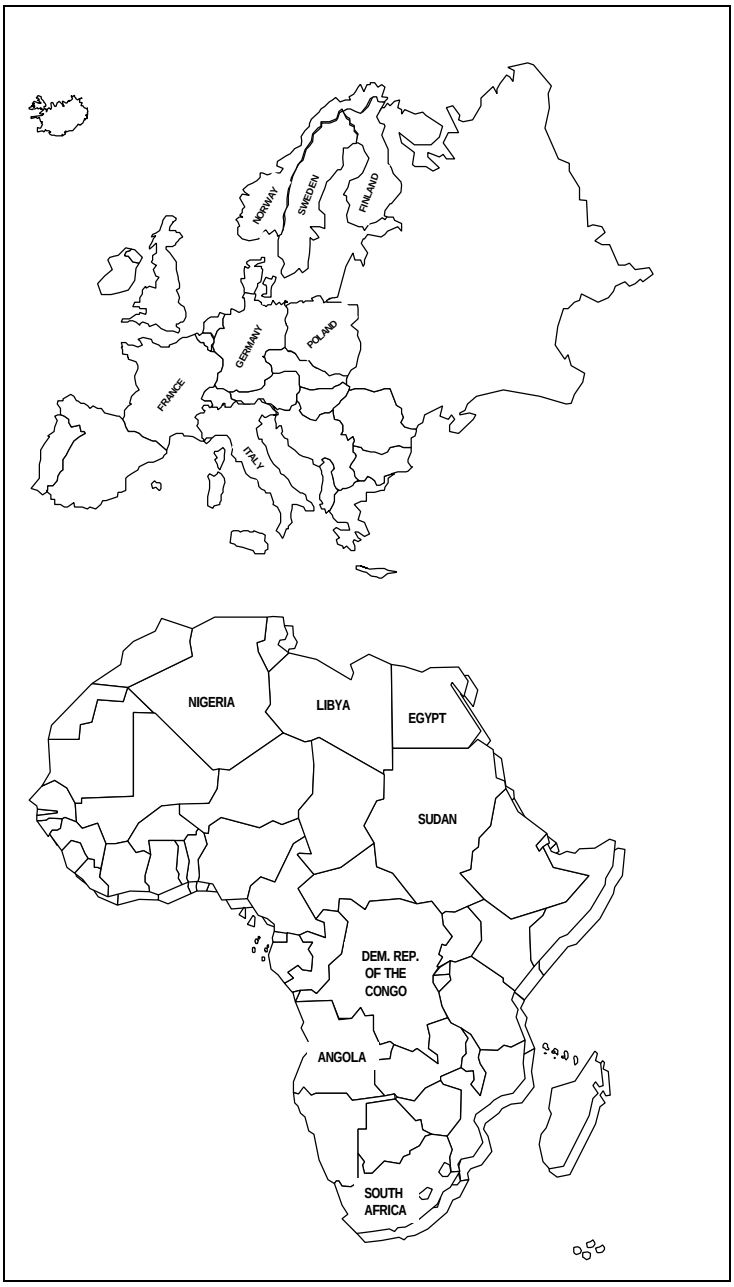

Figure B-3. USEUCOM Area of Responsibility

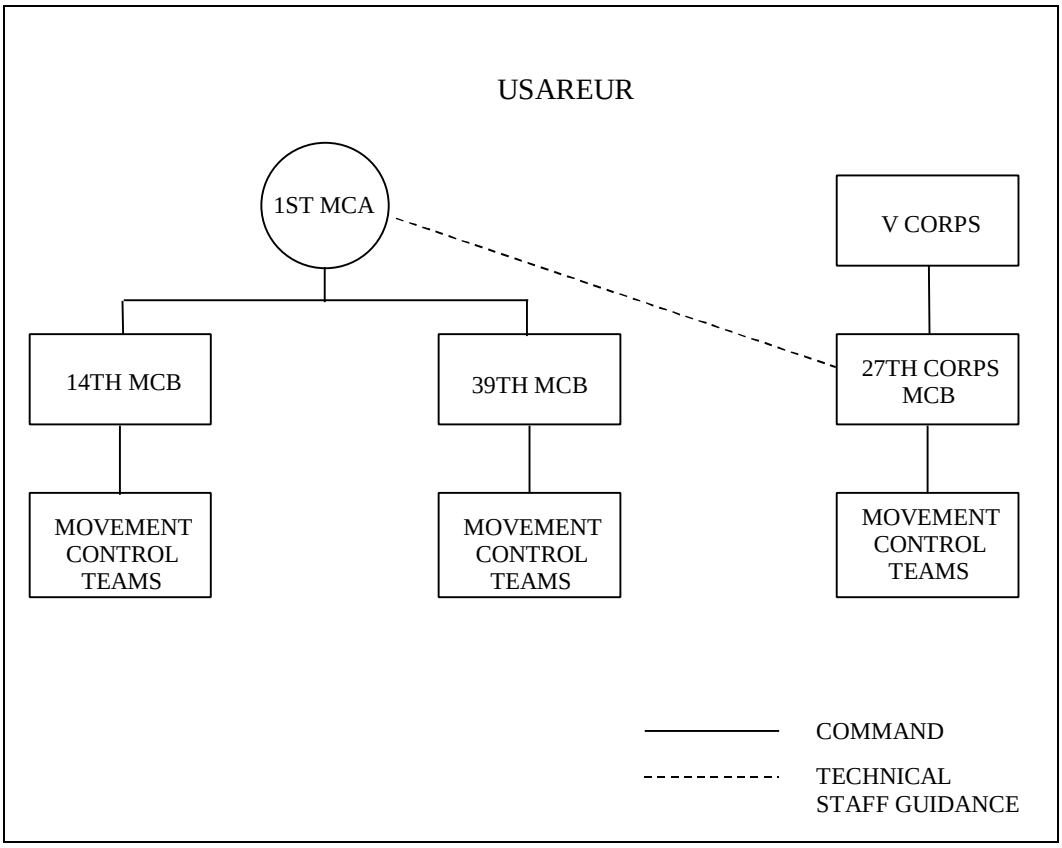

Figure B-4. Organization of the 1st MCA

Section III. United States Forces Korea

B-8. USFK Area of Responsibility. USFK is a sub-unified command of the USPACOM located at Camp H.M. Smith in Hawaii. Most US Army forces in Korea are assigned to the Eighth United States Army located in Seoul, Korea. EUSA is the Army component of USFK. US Army forces also support two combined commands (the United Nations Command and the Combined Forces Commands) within USPACOM.

B-9. USFK COMMAND RELATIONSHIPS. The 25th MCB operates as a separate battalion under the 19th TAACOM. The 25th MCB operates as EUSA's transportation manager. The 837th Transportation Battalion operates the port of Pusan in direct support of USFK.

B-10. ORGANIZATION. Figure B-5 shows the organization of the 25th MCB. The 25th MCB is headquartered in Seoul, Korea. The 25th MCB has two regional MCTs and two Port MCTs (Figure B-6).

The 1st RMCT is collocated with the 25th MCB at Seoul (Figure B-7). The 2nd RMCT provides movement control for the southern sector of the Korean peninsula (Figure B-7). The 25th MCB performs port clearance functions at Osan, Kunsan, Kimhae, and Taegu air bases and Pusan, Pohang, and Chinhae seaports.

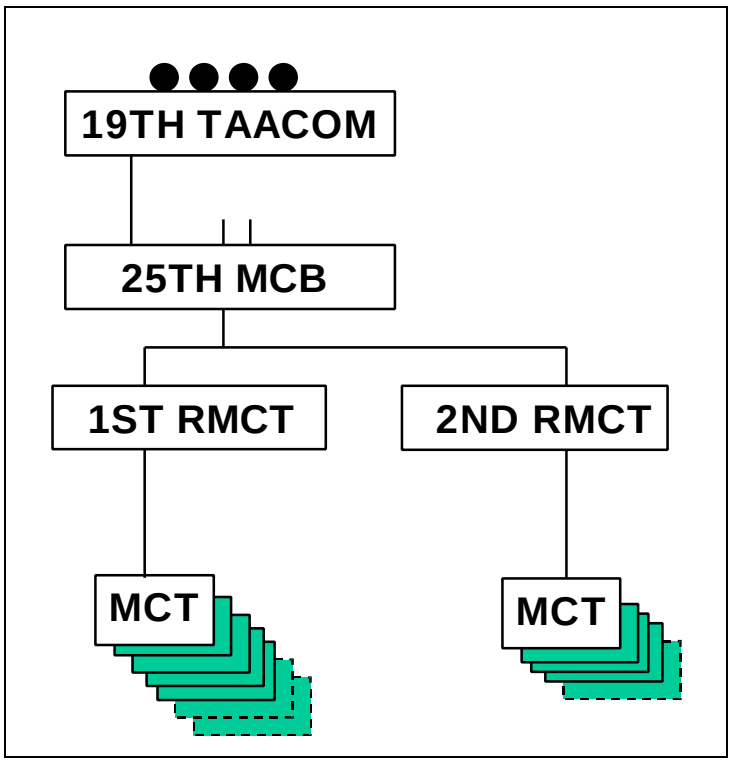

Figure B-5. Organization of the 25th MCB

B-11. COMBINED OPERATIONS. The CTMC is an ROK/US combined transportation movement control agency activated during exercise and contingency operations. It is the single manager responsible for transportation movement management in support of military operations in the Korean theater of operations.

The CMCC collocated with the First, Second, Third ROK Armies and Capital Defense Command (CMCC1, CMCC2, CMCC3, and CMCC5 respectively) provide movement control support in each Army area of operations and Seoul. The 25th MCB staffs each CMCC with their counterpart ROKA MMCs during exercise and contingency operations.

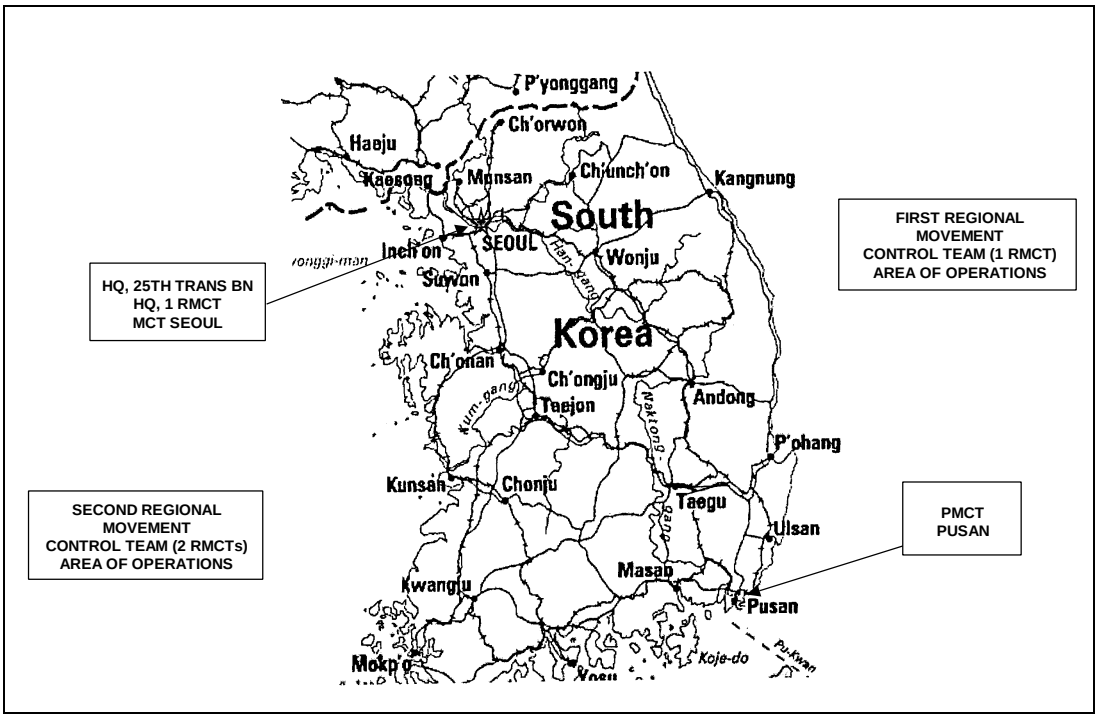

Figure B-6. 25th Transportation Battalion Locations

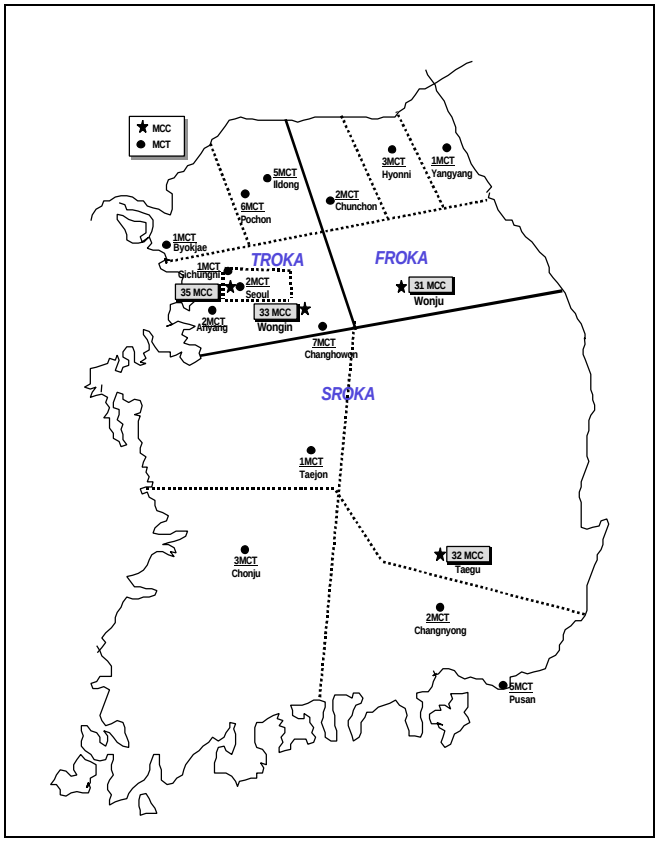

Figure B-7. ROKA Highway MCC/MCT

APPENDIX C

TRANSPORTATION MOVEMENT RELEASE

C-1. INTRODUCTION. This appendix serves as a guide for developing the TMR number. The TMR is not a standard Army format, but a flexible accounting system that can be adapted to any theater. Each theater should publish implementing procedures and codes.

C-2. TRANSPORTATION MOVEMENT RELEASE. A TMR number is the authority for movement of a shipment. Figure C-1, page C-2, shows an example of a movement request. The movement number commits transportation assets, verifies the capability of the consignee to receive the shipment, and serves as the unique identifier of the movement requirement. The TMR number is used to account for the transportation assets during movement much like the TCMD is used to account for the cargo during movement. There is no standard format for the movement request. Each movement control element will tailor the transportation request to fit the situational needs of its mission. The codes for completing the TMR number and commitment work sheet can be found in DOD Regulation 4500.32-R (MILSTAMP) and theater regulations.

C-3. TMR NUMBER. A TMR number may be as simple as the Julian date and the number assigned to a particular shipment. For example, 933415 would break down as follows: 9334 is the Julian date and 15 is the fifteenth shipment assigned that day. A sample 12-digit TMR number is explained in Figure C-2, page C-2. The TMR number can be lengthened or shortened to meet the information needs of the theater. A more complex TMR number is used in USAREUR and Korea.

C-4. SUPPLY SYSTEM INTERFACE. Movement control is closely linked to the supply system. The supply system generates much of the transportation requirements that support combat forces. Movement planners at all echelons must understand that supply priorities and competing demands for logistics resources affect transportation priorities. Understanding the relationship of the supply system to the transportation system is essential to effectively plan and execute movement control.

a. Supply Requisition and Procedures. Transportation priorities are derived from the priority designator found on all materiel requisitions.

(1) Priority designator. The PD is based upon a combination of factors that relate to the mission of the unit requesting materiel and the urgent need for the materiel. The requesting unit puts a PD on all requests it submits to a SSA. The PD is determined according to JP 4-01.
Table C-1, page C-3, shows how the PD is determined.

(2) Force/activity designator. A FAD is a Roman numeral (I to V) assigned by the JCS or Army MACOM. The FAD indicates the essential mission of a unit to meet national objectives.

(3) Urgency of need designator. A UND is an alphabetic letter (A to C) assigned by the commander of the unit requesting the materiel. The UND is based on the importance of the requested materiel in accomplishing the unit's mission.

MOVEMENT REQUEST

ORIGIN		DESTINATION		MCT USE ONLY
UNIT/UIC	WCPPAA	UNIT/UIC	WCPP01	TMR #
LOCATION	Wiesbaden, Germany	LOCATION	Wurzburg, Germany	DTG
GRID		GRID		APPROVED
POC	SSG Hays	POC	SGT Moore	
TELEPHONE #	337-6846	TELEPHONE #	683-1212	STAMP
REQUESTOR	SSG Hays	RDD		
SPOT DTG	146			
PULL DTG	148			

SAMPLE

CARGO DESCRIPTION									ASSETS TASKED		
	TYPE		DIMENSIONS								
QTY	PACK	DESCRIPTION	LENGTH	WIDTH	HEIGHT	WEIGHT	CUBE	ASSETS REQUIRED	UNIT	TYPE	# VEH
		General Cargo	108”	66”	72”	25,000lbs	1,700”	2 XL			

SPECIAL HANDLING/REMARKS

Will pick up assets at MP and escort to loading point.

REMARKS

Figure C-1. Sample Movement Request

O A 0 0 0 1 S S R O 1 9

O:	Origin MCT Code; O - OSAN Port MCT
A:	Month Code; A = January
0001:	Serial Number; # of _____ scheduled that day
S:	Destination MCT Code; S = Seoul
S:	Stop sequence code; S - Single stop
RO:	Special Interest Code; RO = Reefer
1:	Mode Code; 1 = EAC Highway Asset
9:	Transportation Priority; 9 = 999

SAMPLE

Figure C-2. Sample 12-digit TMR Number

Table C-1. Determining Priority Designators

		URGENCY OF NEED DESIGNATOR		
		A	B	C
	FORCE/ ACTIVITY DESIGNATOR	UNABLE TO PERFORM MISSION	IMPAIRING MISSION	ROUTINE
I.	Top national priority	01	04	11
II.	Combat ready	02	05	12
III.	Ready to deploy within 30 days	03	06	13
IV.	Ready to deploy within 90 days	07	09	14
V.	Ready to deploy after 90 days	08	10	15

(4) Transportation priority. Before selecting the mode of transportation, the transportation officer converts the PD on the supply document to a TP as shown in Table C-2.

Table C-2. Converting PD to a TP

PD	TP
01-03	1
04-08	2
09-15	3

b. Transportation and Mode Selection. Mode selection is governed by the following:

- TP.
- SDD or RDD.
- Weight and cube of the shipment.
- Nature of the materiel.
- Cost of the transportation.
- Distance to be shipped.
- Modes of transportation available between the depot and the POE.

Table C-3 shows the preferred mode for each TP for movement between CONUS and an overseas theater.

Table C-3. Preferred Mode for TP

TP	PREFERRED MODE
1	air
2	air
3	sealift

There are times when the transportation officer will select a mode other than the preferred mode. For example, TP 1 and TP 2 shipments that normally move by air might move by surface when the following happens:

- Items to be shipped are too heavy or too large to fit in an aircraft.
- Surface transportation is the only mode available between the POE and POD.
- Surface transportation is more advantageous or more expeditious due to the short distance.

On the other hand, TP 3 shipments that normally move by surface, might move by air when the following happens:

- Air transportation is the only mode available.
- Overall cost of shipping via surface is greater than shipping via air.
- Materiel being shipped is high value or a security risk and it would be in the best interests of the government to ship it by air.

(1) Standard delivery date. The SDD is the calendar date that materiel must be delivered to the requisitioner. It is based on UMMIPS criteria and includes the normal processing and shipping time the supply and transportation personnel use to process and move supplies from CONUS depots to overseas locations.

(2) Required delivery date. When the SDD will not meet the requisitioner's requirements, the requisitioner may specify an RDD, which is the date the materiel is needed. The RDD is entered on the requisition as an adjustment from the SDD. The RDD does not change the priority of the shipment. The only way to change the priority of shipment is by adjusting the UND. An RDD signals the system to expedite the shipment.

(3) 999 shipment. Requisitioners may place a 999 in the RDD block of TP 1 shipments (PDs 01, 02, and 03 requisitions) according to DA Pamphlet 710-2-1. The presence of the 999 indicates that the requisition will be filled and shipped ahead of all other TP 1 shipments.

c. Supply Systems and Organizations. Requisitions are filled using the following systems and organizations.

(1) Defense automated addressing system. The DAAS routes requisitions and related information among supply units materiel managers, NICPs, and CONUS depots. The DAAS also provides the LSA with concurrent images of requisitions and related traffic for recording in the LIF.

(2) Logistics intelligence files. The LIF is an on-line computerized database that centralizes the collection, correlation, and retrieval of supply and transportation data on Army-sponsored requisitions maintained by the LSA. The LIF furnishes historical supply and transportation pipeline progress of a requisition from the time it is sent through the DAAS to the time materiel is received. It is used to measure DSS performance and focus management attention on specific pipeline segments needing improvement. The database does not include Class III (bulk petroleum) and some Class I perishable items. See DA Pamphlet 700-30 or AR 725-50 for LIF procedures.

(3) National inventory control point. The NICP directs the fill of requisitions from stocks on-hand at a depot. The NICP issues an MRO that authorizes the release of the materiel.

(4) Supply depot. Once the materiel has been offered for shipment, the transportation officer selects a mode of transportation to ship the materiel to a CCP or POE. Depot processing and shipping procedures are outlined in AR 725-50.

APPENDIX D

TABLES OF ORGANIZATION AND EQUIPMENT

D-1. INTRODUCTION. This appendix contains a detailed description of the mission, assignment, methods of operation, and function of all movement control organizations.

D-2. MOVEMENT CONTROL ORGANIZATIONS. The organizations described in this appendix are as follows:

- Movement Control Agency.
- Movement Control Battalion (Echelons Above Corps).
- Movement Control Battalion (Corps).
- Port Movement Control Team.
- Area Movement Control Team.
- Division Support Movement Control Team.
- Movement Regulating Team.
- Cargo Documentation Team.

I. MOVEMENT CONTROL AGENCY.

1. MISSION. The MCA coordinates movement management services for all common-user transportation modes including allied and/or host nation assets when they are committed to support the theater logistics or transportation plan. The MCA plans and monitors daily transportation movement requirements and capabilities. They implement the task force commander's priorities. They supervise the EAC Movement Control Battalions and develops and enforces theater highway regulations.

2. ASSIGNMENT. The MCA is assigned to a Theater Support Command.

a. Methods of Operation. The MCA is a modularly designed organization. The modular design allows the Joint Force Commander to tailor the MCA as needed. Its authority and responsibility is limited to the JFC's authority. The MCA is the JFC interface with the TRANSCOM, its subordinate commands, and the Joint Deployment Agency. The MCA plans and coordinates movement requirements providing timely, flexible, and effective support to combat forces.

b. Functions. The following provide a variety of functions to ensure the successful mission of the MCA.

(1) Paragraph 01, Command Section. The MCA headquarters commands and controls the subordinate MCB. The Command Section provides administrative functions for the unit. It provides overall command and control of the operating elements of the unit to accomplish duties imposed by statute regulations, directives, and assigned missions tasks. When commanded by a General Officer, there is a requirement for an aide-de-camp. The minimum number of personnel requirements for this section is as follows:

- Commander.
- Deputy Commander.
- G1 officer.
- G2/3 officer.
- G4 officer.
- Chaplain.
- Judge Advocate General.

(2) Paragraph 02, Headquarters & Headquarters Detachment. The detachment headquarters provides command, control, administrative, and limited logistics support to the MCA and assigned or attached teams. This section provides internal security, training, food service, supply, organic maintenance support, visitor reception, and accommodations. Personnel requirements consists of the following:

- Commander.
- First Sergeant.
- Supply and admin personnel.
- Cook.
- Vehicle mechanic.

(3) Paragraph 03, G1 Section. The G1 Section is the principal section handling all matters pertaining to military and civilian human resources. The G1 monitors personnel readiness and personnel services and manages the headquarters. Specific responsibility includes personnel management readiness; health and personnel service support; and administration of discipline, awards, punishments, and transfers. This section requires the following personnel:

- Two administrative supervisors.
- Legal clerk.
- Mail clerk.
- Administrative specialist.

Refer to FM 101-5, Staff Organization and Operations, for a more detailed description of G1 functions and responsibilities.

(4) Paragraph 04, G2/3 Section. The G2/3 Section is the communications and security link between higher and lower headquarters. It is the operations and security center. It is the principal staff officer for all matters concerning security, training, operations and plans, and force development and modernization. The G3 develops deployment and emplacement plans for the MCA. The G2/3 specifically supervises the command training program, prepares OPLANs and OPORDs, coordinates and plans troop movements, route selection, movement priorities, locations, and prepares movement orders. The G2/3 has the Plans and Program Division and the Operations Division working directly for them. Minimum personnel requirements are as follows:

- Two assistant G3 officers.
- Plans officer.
- Intelligence officer.
- Intelligence NCO.
- Transportation NCOIC.
- Supporting administration personnel.

Refer to FM 101-5, Staff Organization and Operations, for a more detailed description of G2/3 functions and responsibilities.

(5) Paragraph 05, Plans and Program Division. The Plans and Programs Division develops, coordinates, publishes, and distributes the movements program using the available intratheater common-user transportation assets. It prepares contingency plans facilitating the initial deployment and establishment of the MCA in theater. It coordinates and forecasts long-term movement and communications requirements, receives and updates higher headquarters on movement activities, intelligence, and any information concerning transportation systems, facilities, equipment, and personnel. It will coordinate the evacuation of civilian refugees and US civilians with appropriate authorities. It collects, monitors, and evaluates data concerning lines of communication capabilities. It also develops theater container policy with the USTRANSCOM and develops standard formats and procedures for collecting and presenting statistical data. The personnel requirements are as follows:

- Two plans officers.
- Two joint plans officers.
- Two movement control officers.
- Mobility warrant officer.
- Transportation supervisor.
- Four traffic management personnel.

(6) Paragraph 06, Operations Division. The Operations Division integrates transportation management, examines priorities, and evaluates movements plans ensuring compliance with command guidance. It evaluates and ensures that the appropriate mode is used. The operations division has an Airlift Movements Branch, a Sealift Movements Branch, and an Inland Surface Branch. All branches communicate and exchange data with the deployment community. These branches are discussed below. Personnel requirements are as follows:

- Operations officer.
- Movement control officer.
- Transportation supervisor.

(7) Paragraph 07, Airlift Movements Branch. The Airlift Movements Branch coordinates with the US Air Mobility Command on strategic in/outbound airlift. It receives airlift requests from the component commands and establishes joint airlift priorities. The MCA validates and prioritizes airlift requests and tasks Commander, Airlift Forces to execute those requests. Reviews and refers airlift requests to the appropriate movement agency. Monitors to ensure that theater-assigned airlift assets are not over tasked. Reviews, validates, and recommends changes to regularly scheduled airlift routes. Personnel requirements are as follows:

- Branch chief.
- Movement control officer.
- Transportation supervisor.
- Three movement control personnel.

(8) Paragraph 08, Force Tracking Branch. The Force Tracking Branch monitors force deployments and supplies using air and sea assets. It recommends airlift movement requirements and priority changes. It monitors the deployment of forces and supplies when water terminals, rail, highway, or inland waterways are used for deployment. It coordinates with the Corps MCB for the reception and onward movement of units. Personnel requirements are as follows:

- Branch chief.
- Two movement control officers.
- Transportation supervisor.
- Three movement control personnel.

(9) Paragraph 09, Surface Transportation Branch. The Surface Transportation Branch monitors the theater surface transport capabilities, port clearance, and the status of rail, highway, and waterway main supply routes. They coordinate with MTMC and seaport operators to monitor seaport limitations and capabilities. They maintain information files on the military road network including data on obstructions, detours, capacities, critical choke points, surface conditions, and enemy activities affecting the highway and rail nets. They develop long-range and short-range road network repair priorities. This branch develops policies and procedures for maintaining container and pallet visibility. Personnel requirements are as follows:

- Branch chief.
- Two circulation control officers.
- Movement control officer.
- Mobility warrant officer.

(10) Paragraph 10, Sealift Movements Branch. Sealift Transportation Branch monitors the theater water transport capabilities, port clearance, and the status of waterway main supply routes. They coordinate with MTMC and seaport operators to monitor seaport limitations and capabilities. Personnel requirements are as follows:

- Branch chief.
- Movement control officer.
- Transportation supervisor.
- Three movement control personnel.

(11) Paragraph 11, G4 Section. The G4 Section prepares general logistics and operations plans and orders. Determines supply and transportation requirements. Monitors and analyzes maintenance functions and equipment readiness status. Conducts and coordinates operational and tactical transportation requirements supporting movement control functions. The G4 coordinates for all types of services including food preparation, OCIE operations, aerial delivery, transportation, handling, and storage of hazardous material. Personnel requirements are as follows:

- CWO supply technician.
- Supply supervisor.
- Three supply personnel.

Refer to FM 101-5, Staff Organization and Operations, for a more detailed description of G4 functions and responsibilities.

(12) Paragraph 13, Automation and Communications. The Automation and Communications branch installs, troubleshoots, and maintains all internal communications and automation requirements. They conduct automation security for subordinate units. They manage subordinate unit computer programs and equipment. It also establishes electronic countermeasure procedures for subordinate headquarters. Personnel requirements are as follows:

- Communications staff officer.
- Two communications/electronics automation management officers.
- Mobility warrant officer.
- Five information system's personnel.
- Two signal personnel.

II. MOVEMENT CONTROL BATTALION (ECHELON ABOVE CORPS).

1. MISSION. The MCB (EAC) commands, controls, and supervises movement control teams. The battalion controls the movement of all personnel, units, and materiel in the theater. The battalion maximizes the use of available transportation assets.

2. ASSIGNMENT. The MCB (EAC) is assigned to a Theater Support Command and normally attached to a Movement Control Agency.

a. Methods of Operation. The HHD Movement Control Battalion commands and controls movement control teams behind the Corps rear boundary. The Battalion plans, coordinates, and manages movement programming, highway regulation, and transportation support for the theater. It provides a central headquarters for all movement control teams assigned or attached to the battalion. The battalion provides asset visibility and maintains in-transit visibility of tactical and nontactical moves within the MCA defined geographical area.

b. Functions. The following provide a variety of functions to ensure the successful mission of the MCB (EAC).

(1) Paragraph 01, Battalion Headquarters. The battalion headquarters commands and controls the planning, direction, and supervision of attached and assigned movement control teams. Personnel requirements are as follows:

- Commander.
- Executive Officer.
- Command Sergeant Major.
- "S" staff.
- Administrative personnel.

Refer to FM 101-5 for detailed descriptions of the "S" Staff.

(2) Paragraph 02, Battalion S1 Section. The S1 section performs internal administrative services, personnel actions, mail distribution, and awards support to the battalion. Personnel requirements are as follows:

- Three personnel service clerks.
- Administration clerk.
- Legal specialist.

(3) Paragraph 03, S2/3 Section. The S2/3 is responsible for deployment planning, security, and the manning of the operations center. The S2/3 provides supervision for the Plans, Programming, and Operations Section (paragraph 05) and Highway Traffic Section (paragraph 06). Personnel requirements are as follows:

- C-E officer.
- Transportation supervisor.
- NBC NCO.
- Intelligence sergeant.
- Support administration personnel.

(4) Paragraph 04, Battalion S4 Section. The S4 section plans, coordinates, and supervises all unit logistical activities. The S4 communications systems operate on the command net and the admin/log nets. The admin/log radio is ground mounted and the command and control radio is vehicle mounted. Personnel requirements are as follows:

- Property book officer.
- Property book NCO.
- Three supply personnel.

(5) Paragraph 05, Plans, Programs, and Operations Section. The Plans, Programs, and Operations section works for the S3. It is responsible for movement activities in its designated geographical area. Personnel requirements are as follows:

- Two movement control officers.
- Plans officer.
- Mobility warrant officer.
- Two movement NCOs.
- Five transportation movement coordinators.

This section develops, implements, and monitors theater movements and program and commits transportation ground and air assets for logistical support. They perform the following:

- Maintain operational status.
- Provides information and guidance to subordinate MCTs.
- Maintain ITV.
- Conduct transportation planning.
- Plan support for contingency operations.
- Coordinate exceptional movement requirements.

This section also requires two radios capable of operating on the admin/log net.

(6) Paragraph 06, Highway Traffic Section. This section works for the S3. It is responsible for the area highway regulation plan. Personnel requirements include the following:

- Three movement control officers.
- Mobility warrant officer.
- Transportation supervisor.
- Two movement NCOs.
- Six traffic management coordinators.
- Two circulation control officers.
- Circulation control NCO.

This section plans, schedules, develop, coordinates and regulates the traffic circulation plan. This section also requires two radios operating on the alternate NCS.

(7) Paragraph 07, Unit Ministry Team. The Unit Ministry Team provides religious support to all personnel assigned or attached to the battalion.

(8) Paragraph 08, Detachment Headquarters. The detachment headquarters commands, controls, and provides limited administrative and logistical support to the battalion and attached teams. Personnel requirements are as follows:

- Commander.
- Detachment sergeant.
- Supply and administrative personnel.
- Mechanic.
- NBC specialist.
- Cook (to provide support to the battalion).

III. MOVEMENT CONTROL BATTALION (CORPS).

1. MISSION. The Corps MCB commands, controls, and supervises movement control teams. The battalion controls the movement of all personnel, units, and materiel in the theater. The battalion maximizes the use of available transportation assets.

2. ASSIGNMENT. The Corps MCB is assigned to a Corps.

a. Methods of Operation. The HHD Movement Control Battalion commands and controls movement control teams forward of the Corps rear boundary. The battalion plans, coordinates, and manages movement programming, highway regulation, and transportation support for the Corps. It provides a central headquarters for all movement control teams assigned or attached to the battalion. The battalion provides asset visibility and maintains in-transit visibility of tactical and nontactical moves within the Corps defined geographical area.

b. Functions. The following provide a variety of functions to ensure the successful mission of the Corps MCB.

(1) Paragraph 01, Battalion Headquarters. The battalion headquarters commands and controls the planning, direction, and supervision of attached and assigned movement control teams. Personnel requirements are as follows:

- Commander.
- Executive Officer.
- Command Sergeant Major.
- “S” staff.
- Administrative personnel.

Refer to FM 101-5 for a detailed descriptions of the "S" Staff.

(2) Paragraph 02, Battalion S1 Section. The S1 section performs internal administrative services, personnel actions, mail distribution, and awards support to the battalion. Personnel requirements are as follows:

- Three personnel service clerks.
- Administration clerk.
- Legal specialist.

(3) Paragraph 03, S2/3 Section. The S2/3 is responsible for deployment planning, security, and the manning of the operations center. This section provides supervision for the Plans, Programming, and Operations Section (paragraph 05) and Highway Traffic Section (paragraph 06). Personnel requirements are as follows:

- C-E officer.
- Transportation supervisor.
- NBC NCO.
- Intelligence sergeant.
- Support administration personnel.

(4) Paragraph 04, Battalion S4 Section. The S4 section plans, coordinates, and supervises all unit logistical activities. The S4 communications systems operate on the command net and the admin/log nets. The admin/log radio is ground mounted and the command and control radio is vehicle mounted. Personnel requirements are as follows:

- Property book officer.
- Property book NCO.
- Three supply personnel.

(5) Paragraph 05, Plans, Programs, and Operations Section. The Plans, Programs, and Operations section works for the S3. It is responsible for movement activities in its designated geographical area. Personnel requirements are as follows:

- Two movement control officers.
- Plans officer.
- Mobility warrant officer.
- Two movement NCOs.
- Five transportation management coordinators.

This section develops, implements, and monitors theater movements and program and commits transportation ground and air assets for logistical support. They also perform the following:

- Maintain operational status.
- Provide information and guidance to subordinate MCTs.
- Maintain ITV.
- Conduct transportation planning.
- Plan support for contingency operations.
- Coordinate exceptional movement requirements.

This section also requires two radios capable of operating on the admin/log net.

(6) Paragraph 06, Highway Traffic Section. This section works for the S3. It is responsible for the area highway regulation plan. Personnel requirements for this section include the following:

- Transportation officer.
- Two movement control officers.

This section regulates the traffic circulation plan. It also plans, schedules, develops, and coordinates the highway regulation plan and unit movement requirements. This section also requires two radios operating on the alternate NCS.

(7) Paragraph 07, Unit Ministry Team. The Unit Ministry Team provides religious support to all personnel assigned or attached to the battalion.

(8) Paragraph 08, Detachment Headquarters. The detachment headquarters commands, controls, and provides limited administrative and logistical support to the battalion and attached teams. Personnel requirements are as follows:

- Commander.
- Detachment sergeant.
- Supply and administrative personnel.
- Mechanic.
- NBC specialist.
- Cook (to provide support to the battalion).

IV. PORT MOVEMENT CONTROL TEAM.

1. MISSION. The Port MCT expedites, coordinates, and supervises transportation support of units, cargo, and personnel into, through, and out of air, land, or water ports. The exception is the movement of bulk POL using a pipeline.

2. ASSIGNMENT. The Port MCT is assigned to a Corps, an Army Service Component Command, or a Theater Support Command attached to a Transportation Movement Control Battalion (Corps or EAC).

a. Methods of Operation. The Port MCT operates at aerial and sea ports. This team expedites the throughput of cargo through the transportation system. It provides in-transit visibility of units, cargo, and personnel transiting from/to POD's/POE's. The team deploys on an as needed basis supporting onward movement and sustainment operations.

b. Functions. The following provide a variety of functions to ensure the successful mission of the Port MCT.

(1) Paragraph01, Port Movement Control Team. The Port MCT expedites the port clearance of Army cargo and personnel. Personnel requirements are as follows:

- Transportation officer as the OIC and operations supervisor.
- Personnel officer.
- Two movement control officers.
- Health service material officer.
- Ten traffic management personnel.
- Stock control NCO.
- Mobility warrant officer.
- Movement supervisor.

This team also performs the following:

- Assists with the preparation of freight handling plans.
- Provides technical expertise at the port.
- Corrects congested areas that reduce movement capability.

- Receives requests and allocates transportation assets fulfilling movement requirements.
- Coordinates, prepares, and distributes movement instructions to shippers, consignees, and transport services.
- Coordinates the arrival, spotting, loading, unloading, time, and place mutually acceptable to the shipper, consignee and transport service.
- Maintains ITV.

V. AREA MOVEMENT CONTROL TEAM.

1. MISSION. The Area MCT expedites, coordinates, and supervises transportation support of units, cargo, and personnel into, through, and out of air, land, or water ports. The exception is the movement of bulk POL using a pipeline.

2. ASSIGNMENT. The Area MCT is assigned to a Corps, an Army Service Component Command, or a Theater Support Command attached to a Transportation Movement Control Battalion (Corps or EAC).

a. Methods of Operation. The Area MCT supports inland transfer points and supply support activities. The Area MCT expedites cargo throughput and provides ITV of units, cargo and personnel moving through an assigned geographic area. A MCB provides command and control and administrative support for the team. The team deploys, as needed, to support combat units and sustainment operations.

b. Functions. The following provide a variety of functions to ensure the successful mission of the Area Movement Control Team.

(1) Paragraph 01, Area Movement Control Team. The Area MCT performs movement control functions for movements of units, cargo, and personnel (except bulk POL by pipeline). The team validates transportation requirements and coordinates transportation support, highway clearance, cargo and personnel movements, diversions, reconsignments, and transfers. They provide technical expertise to transportation users and provide ITV of unit equipment and sustainment cargo. This team has mode tasking authority for transportation assets. Personnel requirements are as follows:

- Movement control officer.
- Mobility warrant officer.
- Two movements supervisors.
- Eight transportation management coordinators.

VI. DIVISION SUPPORT CONTROL TEAM.

1. MISSION. The Division Support MCT augments the Division Transportation Office.

2. ASSIGNMENT. The Division Support MCT is assigned to a Corps, attached to a division.

a. Methods of Operation. The Division Support MCT assists the DTO with movement programming, highway regulation, and division transportation support. The team

deploys as needed to support the division RSO&I and division sustainment operations. They assist with the execution of divisional highway regulation for nontactical movements, the planning and coordinating of the divisions MSRs, and provide movement control for tactical and nontactical road marches.

b. Functions. The following provide a variety of functions to ensure the successful mission of the Division Support MCT.

(1) Paragraph 01, Division Support Movement Control Team. The Division Support MCT plans, coordinates, and executes highway regulation for all division movements on the division main supply routes. It provides technical expertise and assistance to transportation users in the division area. They assist the DTO with ITV in the division area. Personnel requirements are as follows:

- Movement control officer.
- Mobility warrant officer.
- Movement supervisor.
- Five movement control personnel.

VII. MOVEMENT REGULATING CONTROL TEAM.

1. MISSION. The MRT operates up to four separate movement regulating points.

2. ASSIGNMENT. The MRT is assigned to a Corps, an Army Service Component Command, or a Theater Support Command attached to a Transportation Movement Control Battalion (Corps or EAC).

a. Methods of Operation. This unit operates on MSRs and other designated controlled routes to regulate convoys and serve as the eyes and ears of the MCB. The unit deploys on an as needed basis on mission requirements.

b. Functions. The following provide a variety of functions to ensure the successful mission of the MRT.

(1) Paragraph 01, Movement Regulating Team. The MRT observes, assesses, and reports progress of tactical and nontactical movements along MSRs. The team adjusts movement schedules as necessary. It coordinates and implements changes in unit moves and convoy routing. This team resolves movement conflicts and operates first destination reporting points. Personnel requirements are as follows:

- Four movement control officers.
- Twelve movement control personnel.

VIII. CARGO DOCUMENTATION TEAM.

1. MISSION. The Cargo Documentation Team provides cargo documentation for the transshipment of cargo in water, air, motor, and rail terminals.

2. ASSIGNMENT. The Cargo Documentation Team is assigned to a Corps, an Army Service Component Command, or a Theater Support Command attached to a Transportation Movement Control Battalion (Corps or EAC).

a. Methods of Operation. The Cargo Documentation Team deploys, as needed, to support onward movement of combat units and sustainment operations.

b. Functions. The following provides the function to ensure the successful mission of the Cargo Documentation Team.

Paragraph 01, Cargo Documentation Team. This team provides cargo documentation for the transshipment of cargo in water, air, rail, and motor terminals. Personnel requirements are eight movement control personnel.

APPENDIX E

ROAD MOVEMENT PLANNING

E-1. INTRODUCTION. A movement graph is a method of graphically portraying movements along a single route. It shows the relationship between time and distance and highlights any conflicts between columns scheduled for movement on the route. Movement planners can use movement graphs during planning when conflicts are anticipated or when restrictions are applied to routes.

This appendix is divided into four sections. Section I outlines fundamentals of graphing, route restrictions, and movement tables. Section II shows planning factors for highway movement. Section III describes the graphing, managing, and preparing of movement tables for a highway movement. Section IV outlines how to manage movements over multiple routes using a critical time and point graph.

Section I. Graphing

E-2. PREPARING A GRAPH. Movement graphs can be prepared on any type of graph paper. The vertical axis shows distance and the horizontal axis shows time. The lower left corner of the graph represents zero kilometers (or miles) and the earliest start time of the movement. The planner creating the graph must apply a scale to the vertical and horizontal axis as shown in Figure E-1, page E-2.

The scale of the vertical axis is a division of the total distance. The top number on the vertical axis is the greatest number of km (or miles) to be traveled by any element on the route. The distance scale shown in Figure E-1 is 3 km per block.

The scale of the horizontal axis is a division of the total time. The time at the end of the horizontal scale shows the latest planning time to complete all movements planned for the route. The time scale shown in Figure E-1 is 12 minutes per block.

Critical points along the route, such as built up areas, road junctions, and CPs are shown along the vertical axis on the same scale as that of the graph. The SP and RP can also be annotated alongside the CP if all movements begin and end at the same CP.

The graph at Figure E-1 shows the time and distance scales, critical points, CPs, and a plotted line representing the movement of one vehicle (or the first vehicle of a column) from the SP (Newport) to Jackson Heights. Based on the scale of each block representing 3 km and 12 minutes, the head of the convoy will leave Newport at 0400, travel 90 km to Jackson Heights, and arrive at 0700. Using the formula to determine march rate ($R = D \div T$) the march rate is 30 kmph.

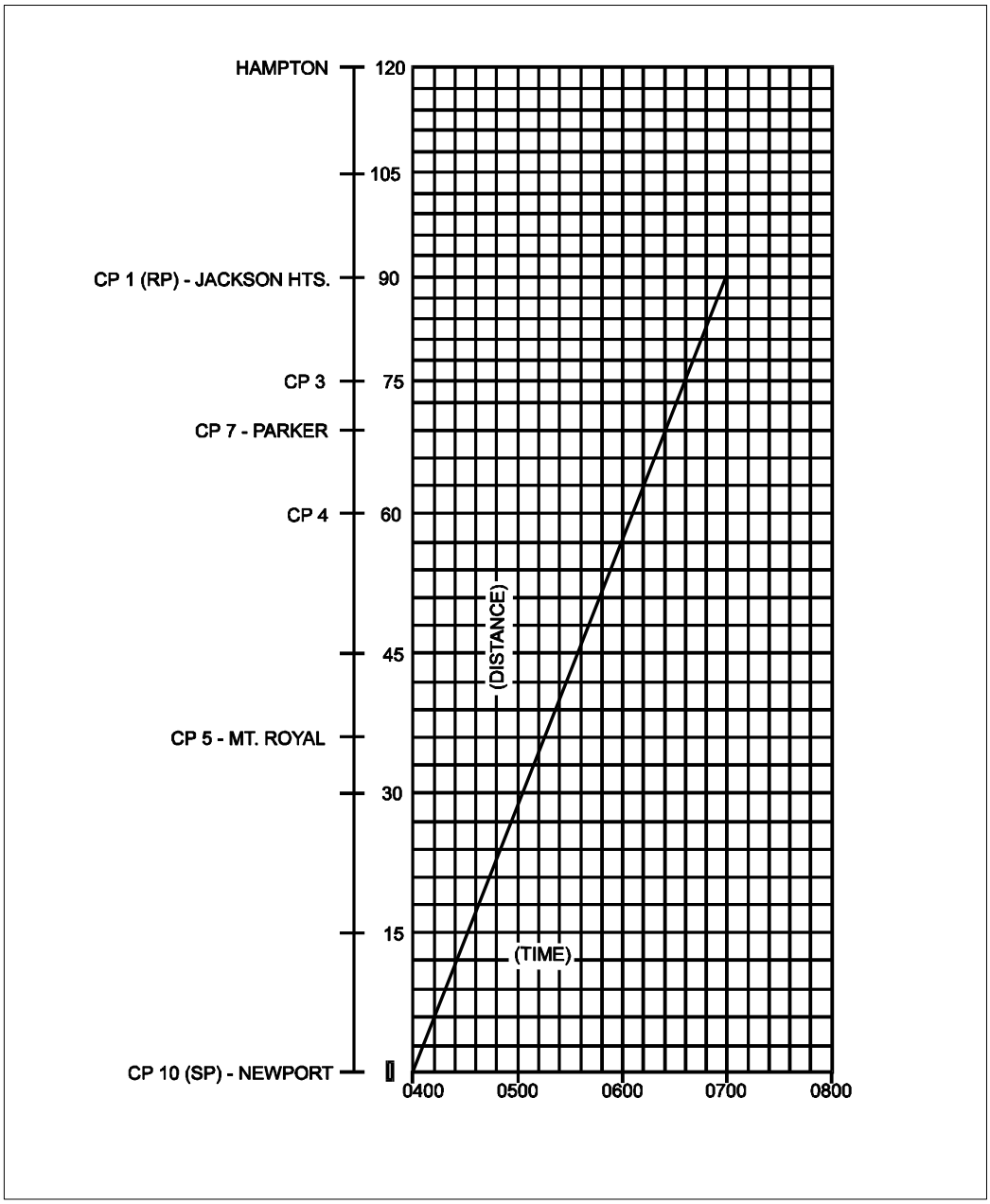

Figure E-1. Schedule of Head of Column

March columns, serials, and march units are represented on a graph by parallel diagonal lines like the ones shown in Figure E-2. The vertical space between the diagonal lines is the length of roadway (length) occupied by the column. It is measured along the vertical scale. The horizontal space is the time it takes for the column to pass any given point (pass time or time length).

The head of the column is plotted at the intersection of the SP on the vertical scale and start time on the horizontal scale. The clear time of the head of the column is plotted at the intersection of the RP on the vertical scale and the clear time on the horizontal scale.

The trail of the column is plotted at the intersection of the same SP on the horizontal scale. The trail vehicle's start time is calculated by adding the pass time to the start time of the first vehicle. The clear time of the trail vehicle is plotted at the intersection of the RP on the vertical scale and its clear time on the horizontal scale. The trail vehicle's clear time is calculated by adding the pass time to the clear time of the first vehicle.

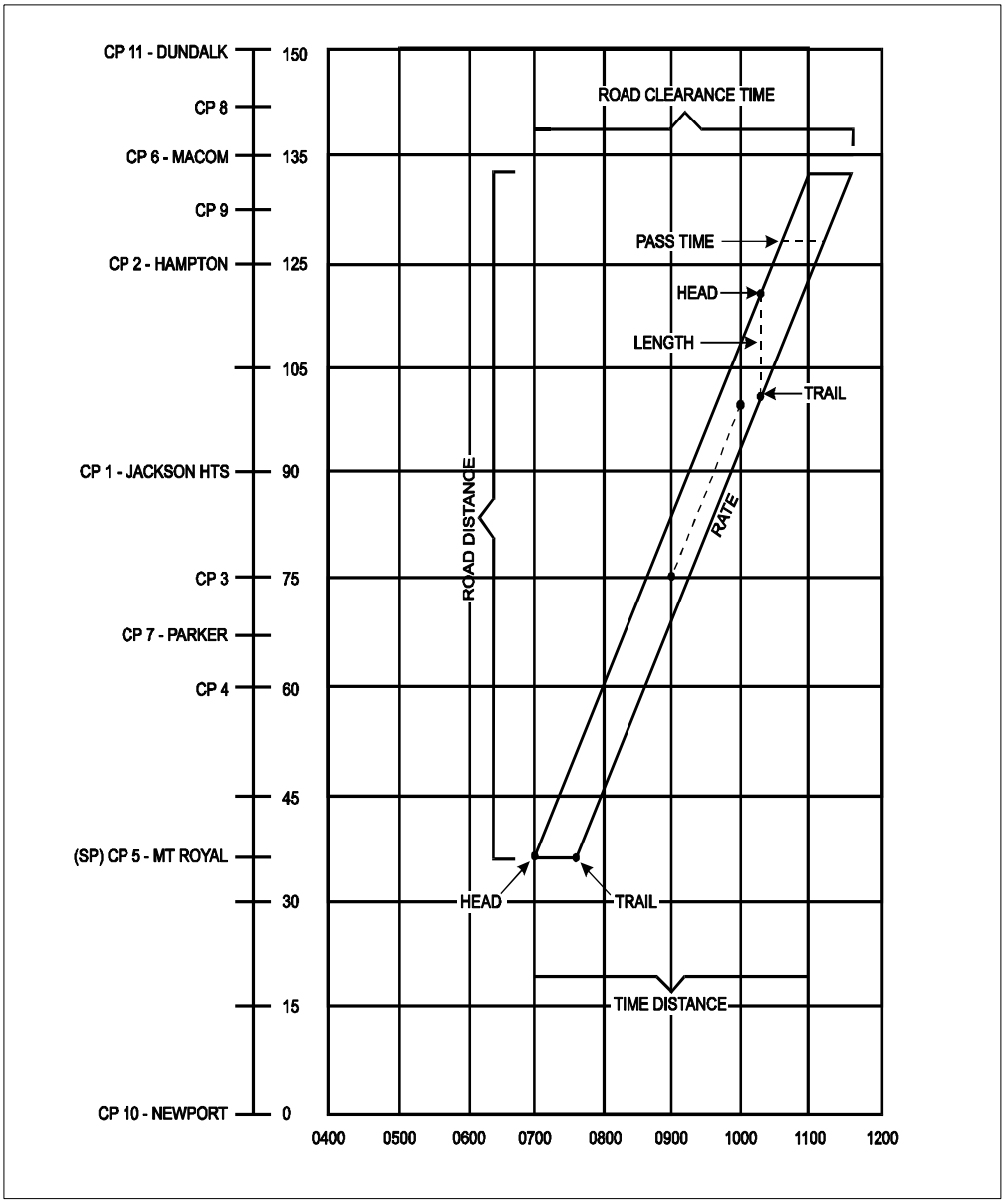

Figure E-2. March Graph Showing Movement of a Column

The graph now completely pictures the movement of one column. The vertical and horizontal scales reveal the following information:

- The two parallel diagonal lines show the head and the trail movements.
- The column's length is about 14 km.
- The pass time of the column is 36 minutes. That means that it will take 36 minutes for the column to clear any point along the route.
- The road distance from SP to RP is about 96 km. The time distance is 4 hours (0700 to 1100). That means it will take 4 hours for the head of the column to clear the RP.
- Road clearance time, calculated by adding the pass time to the time distance, is 4 hours and 36 minutes.
- Road clearance distance, calculated by adding the length to road distance, is 110 km.

March graphs are normally used to show multiple columns traveling over the same routes as shown in Figure E-3. Each of these columns is explained below.

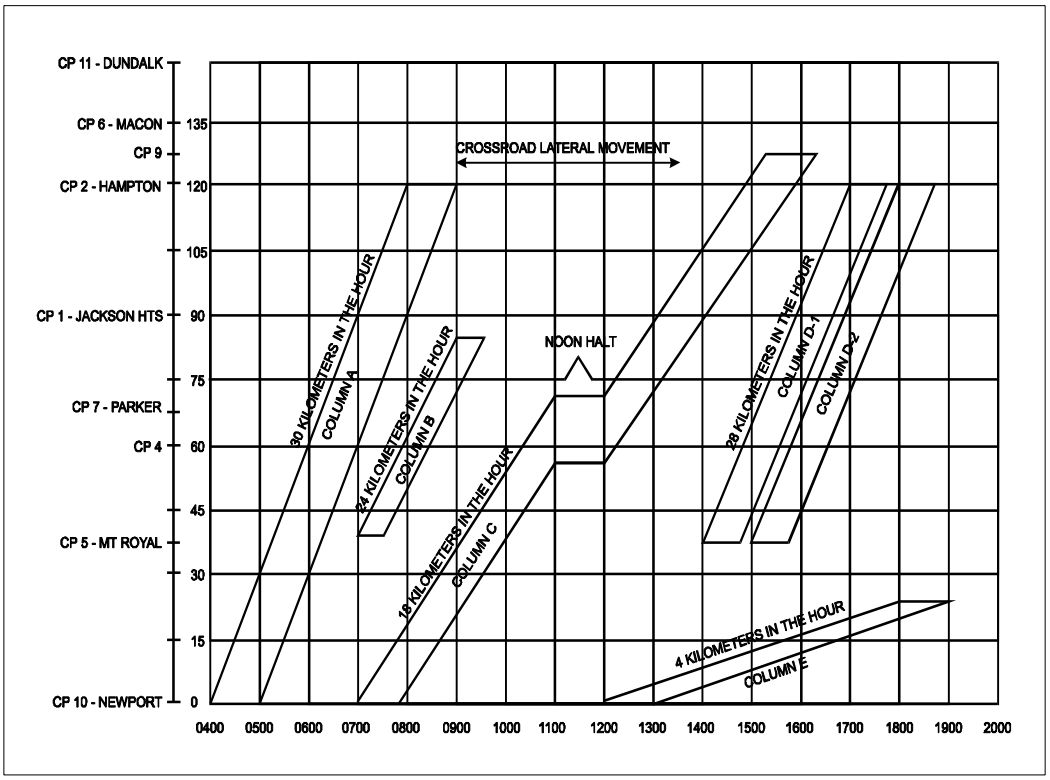

Figure E-3. Scheduling Moves

- Column A is scheduled to leave its SP (Newport) at 0400 and clear the SP at 0500, a pass time of 1 hour. Distance to the RP (Hampton) is 120 km. The rate of march is 30 kmih. The time distance is 4 hours (120 km ÷ 30 kmih). The head will arrive at the RP at 0800 and the trail at 0900. Therefore, the road clearance time is 5 hours, which is the time distance plus the pass time.
- Column B makes a shorter move at a different time. It is scheduled to leave its SP (Mount Royal) at 0700 and clear the CP at 0730, a pass time of 30 minutes. Distance to the RP is 48 km. The rate of march is 24 kmih. The time distance is 2 hours (48 ÷ 24 kmih). The head will arrive at the RP at 0900 and the trail at 0930. Therefore, the road clearance time is 2 1/2 hours. The graph shows that this move does not conflict with the first move.

NOTE: A crossroad lateral movement is scheduled to cross at CP 1 from 0906 until 1312. The graph shows that the lateral movement will not interfere with any of the scheduled moves.

- Column C makes a longer and slower move than the other columns. The graph shows this because the diagonal lines representing time distance are not as steep as the lines of columns A, B, and D. The steepness of a diagonal line on the graph indicates the rate of march. Column C is scheduled to leave its SP (Newport) at 0700 and clear the SP at 0750, a pass time of 50 minutes. Distance to the RP is 132 ÷ km. The rate of march is 18 kmih. Column C is also scheduled for a 1 hour rest halt on the road. Rest halt time is added to the time distance when calculating. Therefore, the time distance is 132 km ÷ 18 kmih + 1 hour or 8 hours and 20 minutes. The road clearance time is 9 hours and 10 minutes.
- Columns D-1 and D-2 are two serials of one column. They are scheduled to travel at 28 kmih from the same SP to the same RP, one leaving 24 minutes after the other. The graph shows that the head of Column D-1 is scheduled to leave the SP at 1400 and arrive at the RP at 1700, a distance of 84 km in 3 hours. The rate of march is 28 kmih (84 ÷ 3 hours). Because both elements of the move are shown on the graph parallel to each other, the rate is the same for both.
- Column E is a foot march on the route. It is traveling slowly (24 km in 6 hours of walking time).

E-3. PLANNING FOR ROUTE RESTRICTIONS. Planners must consider route restrictions when graphing movements. These restrictions normally add greater control measures to a route. They may be imposed to allow for route maintenance, large unit movements, or maneuver. They should be specified in highway regulation plans, OPORDs, or FRAGOs.

Restrictions are marked on graphs by blocking out the time and space on the graph when traffic may not use a route or cross an intersection. To plan around restrictions, planners can calculate either earliest or latest time a column can leave the SP to miss the restriction.

When passing after restriction ends, use the following formula. Compute the earliest time the head of the column can cross the SP to clear the ending time of a route restriction without halting at the restriction.

The earliest time the first vehicle can cross the SP = end of restriction time + safety factor - time distance from start point to restriction point.

EXAMPLE: A restriction is in effect from 1140 to 1240. The distance from the SP to the restriction is 32 km. A safety factor of 15 minutes is in force before and after the restriction. This is a close column move executed at the rate of 16 kmih. Pass time is 12 minutes. Using the formula, calculate the earliest time the first vehicle can cross the SP.

$$1240 + 15 \text{ min} - \frac{32 \text{ km}}{16 \text{ kmih}} = 1255 - 2 \text{ hr} = 1055$$

The earliest time the column can leave the SP is 1055.

When passing before restriction begins, use the following formula. Compute the latest time the first vehicle of a column can cross the SP to have the last vehicle arrive at the 1140 to 1240 restriction before it begins.

The latest time the first vehicle of a column can cross the SP = beginning of restriction time - safety factor - time distance from SP to the restriction - time length. Using the data in the example above, calculate the time.

$$1140 - 15 \text{ min} - \frac{32 \text{ km}}{16 \text{ kmih}} - 12 \text{ min} = 1125 - 2 \text{ hours} - 12 \text{ min} = 0913$$

The latest time the first vehicle can leave the SP is 0913.

Section II. Highway Movement Planning Factors

E-4. MOVEMENT MEASUREMENT. Movements are measured by calculating how long it takes to move a given distance. The three methods of measurement are speed, pace, and rate of march. Movement planners normally use rate of march in performing movement calculations.

a. Speed. Speed is the actual rate at which a vehicle is moving at a given time as shown on the speedometer. It is expressed as kilometers or miles per hour (kmph or mph).

b. Pace. Pace is the regulated speed of a convoy or an element as set by a lead vehicle, the pacesetter. It is constantly adjusted to suit road, terrain, and weather conditions. Pace is also expressed as kmph or mph.

c. Rate of March. Rate of march is the average number of kilometers or miles traveled in any specific time period. It includes short periodic halts and short delays, but it does not include long halts, such as those for consuming meals or for overnight stops. It is expressed in kilometers or miles in the hour (kmih or mih).

E-5. TIME AND DISTANCE FACTORS. Time and distance factors (see Figure E-4, page E-8) are used to perform a wide range of calculations for planning highway movements. They can be used to conduct detailed planning to develop movement tables. They can also be used to conduct expedient planning and calculating to manage movement request as discussed in paragraphs E-6 and E-7.

a. Distance Factors. Distance factors are expressed in kilometers or meters. The terms used to describe distance factors are as follows:

- Length of any column or element of a column is the length of roadway which it occupies. It is measured from the front bumper of the lead vehicle to the rear bumper of the trail vehicle and includes all gaps inside the column.
- Road space is the length of a column, plus any additional space (safety factor) added to the length to prevent conflict with preceding or succeeding traffic.
- Gap is the space between vehicles, march units, serials, and columns. It is measured from the trail vehicle of one element to the lead vehicle of the following element. The gap between vehicles is normally expressed in meters. The gap between march elements is normally expressed in kilometers.
- Lead is the space between the heads of elements in a convoy or between heads of successive vehicles, march units, serials, or columns.
- Road distance is the distance from point to point on a route, normally expressed in kilometers.
- Road clearance distance is the distance that the head of a column must travel for the entire column to clear the RP or any point along the route. Route clearance distance equals the column's length or road space plus road distance.

b. Time Factors. Time is expressed in hours or minutes. The terms used to describe time factors are as follows:

- Pass time (or time length) is the time required for a column or its elements to pass a given point on a route.
- Time space is the time required for a column or its elements to pass any given point on a route plus any additional time (safety factor) added to the pass time.
- Time gap is the time measured between vehicles, march units, serials, or columns as they pass a given point. It is measured from the trail vehicle of one element to the lead vehicle of the following element.
- Time lead is the time measured between individual vehicles or elements of a column, measured from head to head, as they pass a given point.
- Time distance is the time required for the head of a column or any single vehicle of a column to move from one point to another at a given rate of march.
- Road clearance time is the total time a column or one of its elements requires to travel the road distance and clearance point along the route or the RP. Road clearance time equals the column's pass time or time space plus time distance.

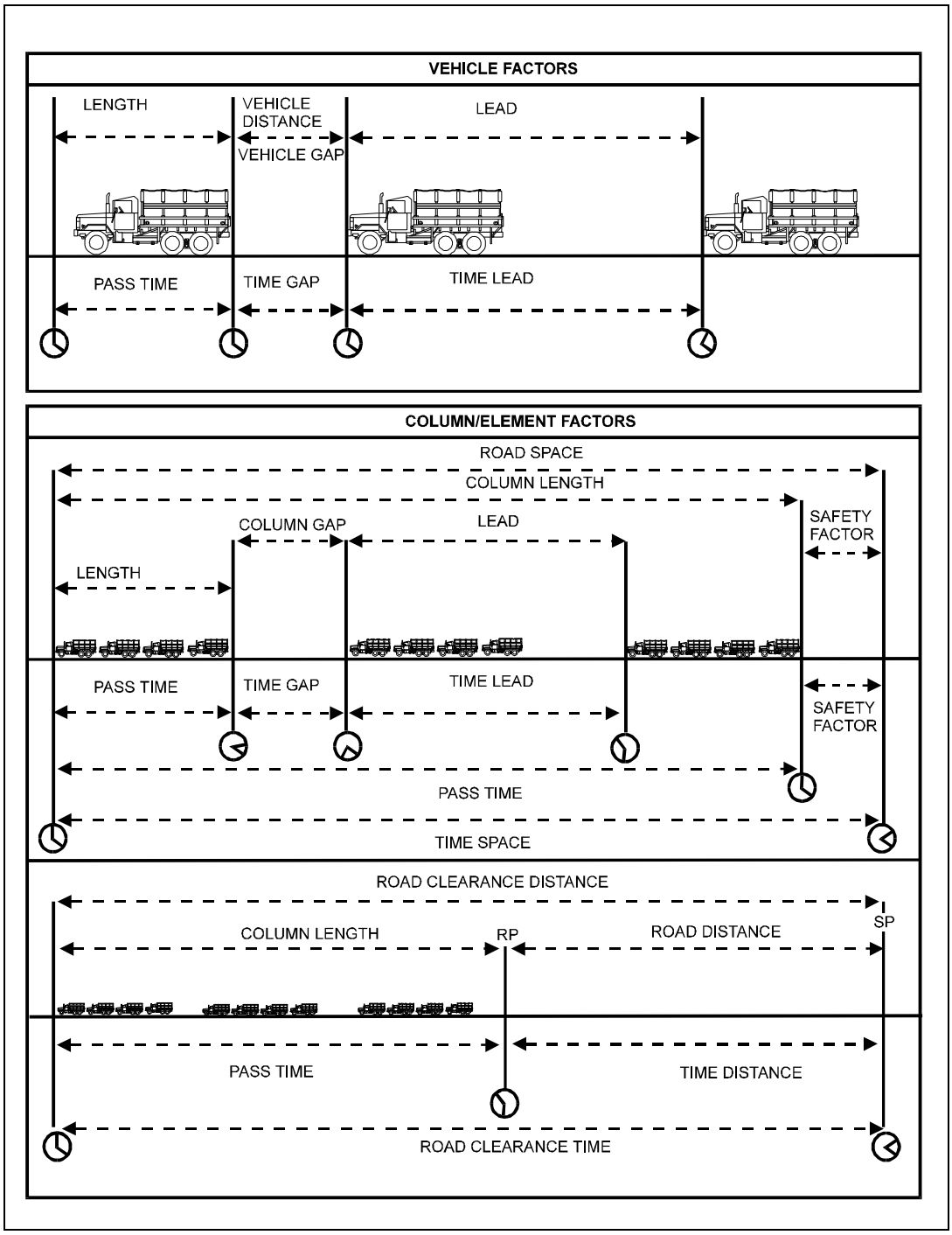

Figure E-4. Time and Distance Factors

E-6. TIME, DISTANCE, AND RATE CALCULATIONS. Time, distance, and rate factors are used to make scheduling calculations for columns of any size. When two of the three factors are known, the third can be found by using one of following equations as shown in Figure E-5.

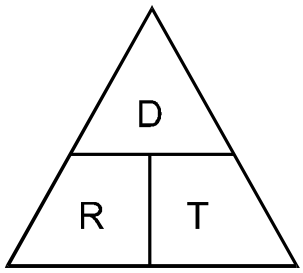

Divide a triangle in three parts as shown. Cover one part of the triangle to find an unknown factor. The uncovered portion of the triangle gives you the formula for finding the unknown.

For example, if the distance is unknown, cover the D and RT (rate x time) remains. If the rate is unknown, cover the R, leaving the $\frac{D}{T}$ showing.

To find the time, cover the T, leaving the $\frac{D}{R}$ showing.

Figure E-5. Finding an Unknown Factor of Time, Distance, or Rate

a. Determining Time. Time equals distance divided by rate. If the distance is 210 km and the rate of march is 42 kmih, the time is 5 hours: $210 \div 42 = 5$.

b. Determining Distance. Distance equals rate multiplied by time. If the rate of march is 40 kmih and time is 4 hours, the distance is 160 km: $40 \times 4 = 160$.

c. Determining Rate. Rate equals distance divided by time. If a convoy travels for 5 hours to complete a 190 km trip, its rate of march is 38 kmih: $190 \div 5 = 38$.

E-7. ARRIVE AND CLEAR TIME CALCULATIONS. To manage movements on MSRs by using location or column scheduling, movement control organizations can use an expedient method of planning and calculating. Both requestors and movement control organizations must understand and apply time and distance factors associated with the movement of convoys on MSRs. Moving units must make calculations as part of their movement planning and movement requests.

The minimum essential information needed is the arrive and clear times at SPs, intermediate CPs, and RPs. Therefore, TA, Corps, and division SOPs should specify a clearance request format that requires requesting units to calculate these arrive and clear times (see Figure E-6, page E-10). The DTO, HTD, or MCB may have to perform these calculations for large unit movements or special movements. They should check the accuracy of unit requests.

TO: CDR 112th MCB ATTN: 1124th MCT	THRU: CDR 34th CSG	FROM: 32nd Corps Spt Bn ATTN: S4	DATE: 26 Mar 19XX EXT # X6060

SECTION I MOVEMENT DATA

MOVING UNIT	CONVOY CDR	START POINT	RELEASE POINT	TYPE OF MOVEMENT
128th S&S Co.	CPT SMITH	GRID: NX110300	GRID: NX410410	UNIT RELOCATION
		LOC: CP 7	LOC: CP 2	

MOVEMENT DATE: 29 Mar 19XX			SP TIME: 0700		
CONVOY ORGANIZATION	# SERIALS 1	SERIAL GAP N/A	# MU 2	MU GAP 5 min	VEH GAP 50M

CHECK POINTS		DISTANCE (KM) BETWEEN PTS	ARRIVE	CLEAR	ROUTE DESCRIPTION	CRITICAL PTS/HALTS
SP	CP 7	XXXXXXXXXXXXXXX	0700	0709	MSR DODGE	
	CP 4	15 km	0723	0732	MSR DODGE	
	CP 10	6 km	0732	0741	MSR DODGE	
RP	CP 2	14 km	0753	0802	MSR DODGE	

Figure E-6. Sample Movement Bid

SECTION II VEHICLE/LOAD DATA - CONVOY COMPOSITION

# OF TRACKS	# WHEELS	HEAVIEST VEH/WT/MLC
0	43	M932 TRACT W/M871 TRL/92, 340/51

QTY	MODEL	DESCRIPTION	LOAD INFO	L	W	H	WT	OTHER/ HAZMAT
24	M871	TRL, 22 1/2T		358	96	103	60,760	
27	M932	TRACT, 5T		280	115	113	31,580	
2	M1009	CUCV		192	95	75	6,720	
8	M1008	CUCV, P/U		185	89	76	8,400	
5	M925	TRK, 5T, D/S		327	115	116	32,458	
6	M105A2	TRL, 1 1/2T		166	83	98	5,670	
6	M101A1	TRL, 3/4T		147	74	83	2,850	
1	M936	TRK, WRKR, 5T		356	115	113	36,729	

REQUESTORS NAME, TITLE, PHONE: TALBERT, RAYMOND, SSG, X6666

SIGNATURE

SECTION III

MOVEMENT CLEARED BY: _____ MOVEMENT CREDIT #: _____

AT DTG: _____

CLEARANCE PASSED TO: _____

AT DTG: _____

POSITIVE INBOUND CLEARANCE BY: _____ DTG: _____

Figure E-6. Sample Movement Bid (continued)

Use time, distance, and rate factors to calculate arrive and clear times. The arrive time is the time the first vehicle in the column will reach an SP, CP, or RP. The arrive time is derived from calculating the time distance. The clear time is the time the last vehicle in the column will clear that SP, CP, or RP. The clear time is derived from calculating the pass time.

Calculate arrive times as follows:

- To calculate the arrive time at the first CP (see also Table E-1), take the distance from the SP to the first CP, divide by the planned rate of march, and multiply by 60 minutes.

Table E-1. Calculating Arrive Times (First CP)

EXAMPLE	Distance from SP to first CP - 8 km March rate - 30 kmih
SOLUTION	8 ÷ 30 = .26 hours x 60 = 16 minutes If the SP time is 0800, then the arrive time at the first SP will be 0816.

- To calculate the arrive time at the second CP (see also Table E-2), take the distance from the first CP to the second CP, divide by the rate of march, and multiply by 60.

Table E-2. Calculating Arrive Times (Second CP)

EXAMPLE	Distance between CPs - 9 km March rate - 30 kmih
SOLUTION	9 ÷ 30 = .30 hours x 60 = 18 minutes If the arrive time at the first CP is 0816, then the arrive time at the second CP will be 0834.

NOTE: Continue this method to calculate the arrive time at succeeding CPs through the RP.

To calculate the clear times at each CP, planners must determine the pass time. Calculating pass time requires calculations for density (Table E-3), time gaps (Table E-4), road space (Table E-5), and pass time (Table E-6).

Table E-3. Calculating Pass Times (Density)

DENSITY =	$\frac{1{,}000 \text{ (meters)}}{\text{gap + average length of vehicle}}$
EXAMPLE	If the gap is 50 meters and the average length of the vehicle in the column is 9 meters, then--
DENSITY =	$\frac{1{,}000}{50 + 9} = \frac{1{,}000}{59} = 16.94$
	= 17 vehicles per km

Table E-4. Calculating Pass Times (Time Gaps)

Note: Time gaps = ([number of march units - 1] x march unit time gap) + ([number of serials - 1] x [serial time gap - march unit time gap]).

EXAMPLE	If a column has two serials with three march units and the time gap between the march unit is 5 minutes and the time gap between serials is 10 minutes, then--
TIME GAPS	= ([6 - 1] x 5) + ([2 - 1] x 5 =
	(5 x 5) + (1 x 5) = 25 + 5 = 30 minutes

Table E-5. Calculating Pass Times (Road Space)

	$\frac{\text{Number of vehicles}}{\text{density}} + \frac{\text{time gaps x rate}}{\text{60 minutes}}$
EXAMPLE	Number of vehicles = 102
	Density = 17 per km
	rate = 30 kmih
	time gaps = 30 minutes
	road space = $\frac{102}{17} + \frac{30 \times 30}{60} = 6 + 15 = 21$ km

Table E-6. Calculating Pass Times (Pass Time)

Pass time =	$\frac{\text{road space x 60}}{\text{rate}}$
EXAMPLE	Continuation from previous examples.
	Pass time = $\frac{21 \times 60}{30} = \frac{1{,}260}{30} =$ 42 minutes

The pass time at the SP is 42 minutes after the first vehicle crosses the SP. If the arrive time at the SP is 0800, the clear time at the SP will be 0842. If the arrive time at the first CP is 0816, the clear time at the first CP will be 0858. Use this same method to calculate the arrive and clear times at succeeding CPs to the RP.

The pass time will stay the same throughout the route as long as the march rate and density do not change. If the march rate or density changes, then recalculate the pass time to determine the new clear time. Calculations are simplified by the following:

- Preparing and using conversion tables for changing US common distances to metric distances, number of vehicles to pass time, and distance to time.
- Standardizing variables to reduce calculation time. When possible, use standard march rates and density.
- Using automated programs to calculate arrive and clear times such as the military application program package.

Section III. Preparing Movement Tables for a Highway Movement

E-8. REVIEWING THE SITUATION. This section provides a step-by-step example of how to compute a highway movement, prepare a road movement graph, and prepare road movement tables for a convoy consisting of five serials.

a. Convoy Data. On 23 February, elements of the 439th Transportation Battalion will move from the unit's present position to an area near CP 106. The movement will consist of five serials, organized as shown in Figure E-7, page E-14. The first and second serials have six march units each; the third and fourth serials have seven march units each; and the fifth has five march units. The SP is CP 97, and the RP is CP 106. The route of march is from CP 97 to CP 106 by way of CPs 99, 103, 104, and 105. The lead vehicle of the first serial will cross the SP at 0800.

SERIALS	UNIT	NUMBER OF VEHICLES	NUMBER OF MARCH UNITS
First	2439th and 2440th Transportation Companies	126	6
Second	2441st and 2442d Transportation Companies	135	6
Third	2443d and 2444th Transportation Companies and Headquarters and Headquarters Detachment, 439th Transportation Battalion	150	7
Fourth	2445th and 2446th Transportation Companies	144	7
Fifth	2447th and 2448th Transportation Companies (attached)	124	5

Figure E-7. Organization of Serial March Units

b. Movement Conditions. Extracts of the highway regulation plan specify the following conditions on the movement.

- The rate of march during daylight hours is 24 kmih and the density of vehicles during daylight hours is 12 per km.
- The rate of march during hours of darkness (1835 to 0630) is 16 kmih and the density of vehicles during hours of darkness is 48 per km.
- Gaps will be 10 minutes between serials and 2 minutes between march units.
- When an en route restriction is applied to the movement, a 15-minute safety factor will be allowed before and after the restriction.

c. Restrictions. The following restrictions are in effect on 23 February.

- CP 99 to CP 103 from 1100 to 1200.
- CP 105 from 1500 to 1530.
- CP 104 from 1510 to 1630.
- CP 105 from 1700 to 1830.

d. Additional Guidance. The fourth serial will halt in place at the 1500 to 1530 restriction at CP 105 and will continue as soon as possible after the restriction. The head of the fifth serial will depart the SP as soon as possible to clear the restriction at CP 104. The fifth serial will stop at the 1700 to 1830 restriction at CP 105 and disperse vehicles until the restriction is lifted.

NOTE: All computations in minutes resulting in a fraction are raised to the next full minute; km are rounded up to the nearest tenth. For example--

- 15.6 minutes - 16 minutes.
- 15.3 minutes - 16 minutes.
- 13.67 km = 13.7 km.
- 13.43 km = 13.5 km.

E-9. COMPUTING TIME DISTANCE OF THE ROUTE. The planner must first determine how long it will take each serial to travel from the SP to the RP, the time distance of the route.

a. Formula. Compute the time distance by dividing the distance from the SP to the RP by the rate of march (TD = D ÷ R).

b. Data. The distances between CPs and total distance are shown in Table E-7.

Table E-7. CP Distances

	KILOMETERS
CP 97 to CP 99	24
CP 99 to CP 103	6
CP 103 to CP 104	9
CP 104 to CP 105	18
CP 105 to CP 106	18
TOTAL	75

c. Computation. The distance from SP to RP is 75 km. The lead vehicle will cross the SP at 0800 and the rate of march during daytime is 24 kmih. Substituting in the formula TD = D ÷ R, TD = 75 ÷ 24, or 3.125 hours. Since .125 hours is 8 minutes (.125 X 60), the time distance is 3 hours and 8 minutes.

E-10. COMPUTING ROAD SPACE OF THE FIRST SERIAL. Road space is the length of a column. The formula for computing road space is shown in Table E-8, page E-16. Figure E-7

shows 126 vehicles in the first serial. The rate of march is 24 kmih; the density is 12 vehicles per kilometer. The time gap is 2 minutes between march units. Because six march units make up the serial, there are five gaps making a total time gap in the serial of 10 minutes. The formula for computing road space for the first serial is shown in Table E-9, page E-16.

Table E-8. Computing Road Space

Road space =	number of vehicles + vehicle density	time gaps x rate 60 minutes

Table E-9. Computing Road Space (First Serial)

Road space =	12 / 6 / 12	+	10 x 24 / 60	=	10.5	+	4	=	14.5 km

E-11. COMPUTING PASS TIME OF THE FIRST SERIAL. Pass time is the time required for a column to pass a point on the route. The formula for computing pass time is shown in Table E-10. Use the road space computed in Table E-9 (14.5 km) to compute road space (Table E-11).

Table E-10. Computing Pass Time

Pass time =	road space x 60 min / Rate

Table E-11. Computing Road Space

Pass time =	14.5 km x 60 min / 24 kmih	= 36.3 or 37 min

E-12. COMPUTING ROAD SPACE AND PASS TIME OF THE SECOND, THIRD, FOURTH, AND FIFTH SERIALS. Using the same formulas and methods of computation as for the first serial, compute the road space and pass time for the second serial (Table E-12), third serial (Table E-13), fourth serial (Table E-14), and fifth serial (Table E-15).

Table E-12. Computing Road Space and Pass Time (Second Serial)

Road space =	135 / 12 +	10 x 24 / 60 =	11.3 +	4 =	15.3 km

Pass time =	15.3 x 60 = 24	38.25 or 39 min

Table E-13. Computing Road Space and Pass Time (Third Serial)

Road space =	150 + 12	12 x 24 = 60	12.5 +	4.8 =	17.3 km

Pass time =	17.3 x 60 = 24	43.2 or 44 min

Table E-14. Computing Road Space and Pass Time (Fourth Serial)

Road space =	144 + 12	12 x 24 = 60	12 + 4.8 = 16.8 km

Pass time =	16.8 x 60 = 24	42 min

Table E-15. Computing Road Space and Pass Time (Fifth Serial)

Road space =	124 + 12	8 x 24 = 60	10.3 + 3.2 = 13.5 km

Pass time =	13.5 x 60 = 24	33.7 or 34 min

E-13. PUBLISHING ROAD MOVEMENT TABLES. The road movement graph is a planning work sheet for movement planners. It is not normally disseminated to subordinate units or published in plans and orders. Information obtained from the graph is published in road movement tables.

E-14. PREPARING A ROAD MOVEMENT GRAPH. A road movement graph is a time and space diagram. After computing for a move, the planner can then see where he plotted the move. The following explains how to plot the move.

a. Designating Hours. From the lower left corner across the bottom of the graph designate the time needed for the movement. Since the first serial is to arrive at the SP at 0800, the timing of this graph should start at 0800 in the lower left corner. The computations performed in paragraphs E-10, E-11, and E-12 show that more than 12 hours are required to complete the movement of the five serials. This is derived from adding the time distance, sum of pass times,

restricted times, and gaps. Therefore, the time of this graph must extend to at least 2100. In this example, each horizontal block represents 12 minutes and every six blocks represents 1 hour as shown in Figure E-8, page E-18.

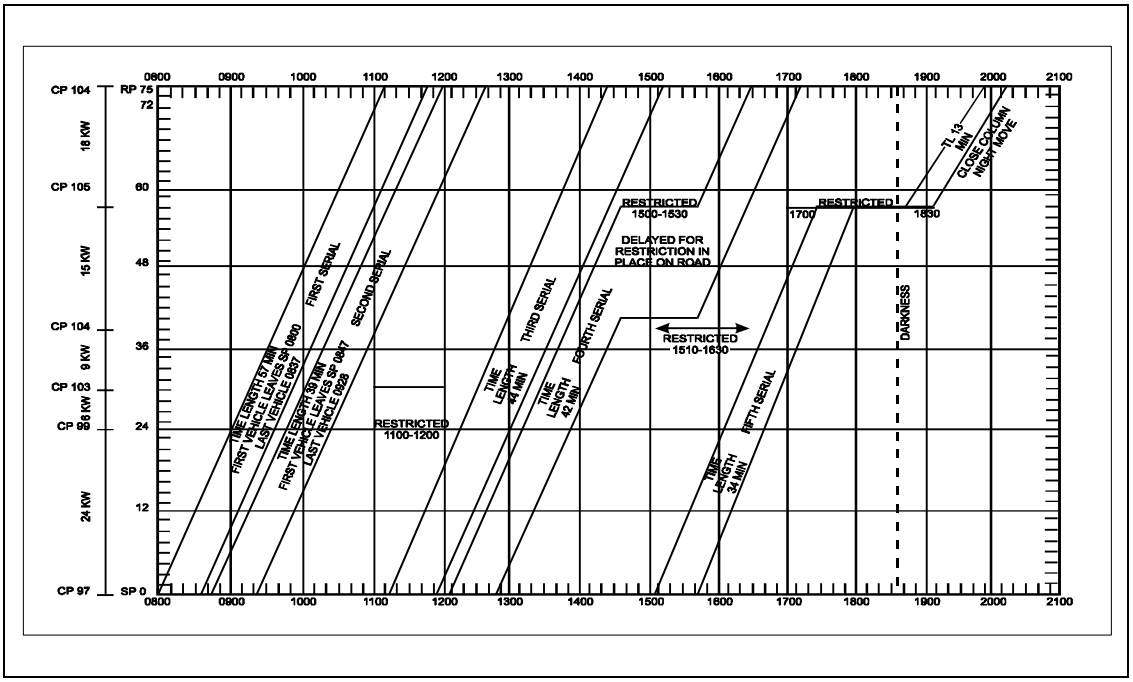

Figure E-8. Road Movement Graph for Five Serials

b. Designating Kilometers. Indicate the distance to be moved in kilometers on the vertical axis. Begin at the SP in the lower left corner of the graph with 0 km. Since this move is 75 km, the top of the vertical axis should be marked as 75 km. In this example, each vertical block between 0 and 75 km represents 1.5 km as shown in Figure E-8. It is important to show critical points, checkpoints, or other important points directly opposite the correct distance blocks of the graph. For example, CP 99 is 24 km from the SP and is noted on the scale opposite the 24 km line. CP 103 is noted on the scale opposite the 30 km line.

c. Plotting the Restrictions. Mark route restrictions within the graph as described below.

(1) The first restriction is from CP 99 to CP 103 between 1100 and 1200. CP 99 is 24 km (16 blocks) from the SP and CP 103 is 6 km (4 blocks) from CP 99. To show the restriction, the time from 1100 to 1200 between CP 99 and CP 103 is blocked out.

(2) The second restriction is at CP 105 between 1500 and 1530. CP 105 is at the 57 km point. In this example, the restriction is only at the CP. To show the restriction, a horizontal line from 1500 to 1530 at the CP is marked. It extends horizontally form 1500 over three blocks (30 minutes).

(3) The third and fourth restrictions are also only at the CP. They are shown as above.

E-15. GRAPHING THE FIRST SERIAL. Once the hours, kilometers, and restrictions are marked on the graph, plot the serials. The first vehicle of the first serial is scheduled to leave the SP at 0800. Put a dot at the beginning of the 0800 line in the lower left corner of the graph. Figure E-8 shows the first vehicle is to arrive at the RP at 1108. This was calculated by adding the time distance (3 hours and 8 minutes) to the time the first vehicle crosses the SP. Locate the 1108 hour line at the top of the graph at the RP (75 km line) and put a dot there and then connect the dots.

The next step is to plot the trail (last vehicle) of the first serial. To find the time the last vehicle crosses the SP, add the pass time to the time the first vehicle crosses the SP. As determined in paragraph E-11, the pass time of the first serial is 37 minutes. Therefore, adding 37 minutes to 0800 gives 0837 as the time the last vehicle of the first serial leaves the SP. Make a dot at 0837 on the bottom of the graph. Then add the time distance of 3 hours and 8 minutes to 0837 start time to compute the time the last vehicle clears the RP. This is 0837 plus 3 hours and 8 minutes, or 1145. Make another dot at the top of the graph at 1145. Connect the dots. This second line parallels the first line drawn, which shows the movement of the first vehicle of the first serial. The horizontal space between the two lines represents the 37-minute pass time of the serial.

E-16. GRAPHING THE SECOND SERIAL. Because the last vehicle of the first serial is scheduled to clear the SP at 0837 and a 10-minute time gap is required between serials, the second serial cannot begin movement until 0847. To show the first vehicle of the second serial on the graph, place a dot at 0847 on the bottom of the graph. The time distance for the second serial is the same as that of the first serial. Therefore, the trail vehicle of the second serial will clear the RP at 1155 (0847 plus 3 hours and 8 minutes). To show the last vehicle of the second serial on the graph, place a dot at 1155 at the top of the graph at the RP and connect the dots with a line.

Plot the trail vehicle of the second serial the same as the first serial. To find the time the last vehicle of the second serial crosses the SP, add the pass time of the second serial to the time the first vehicle of the second serial crosses the SP. From Table E-12, this was determined to be 39 minutes. Therefore, adding 39 minutes to the 0847 SP time gives 0926 as the time the trail vehicle of the second serial leaves the SP. Make a dot at 0926 on the bottom of the graph. Since the first vehicle clears the RP at 1155 and the pass time is 39 minutes, the trail vehicle will clear the RP at 1234 (1155 plus 39 minutes). Make another dot on the top of the graph at 1234. Connect the two dots. The second serial is now complete.

E-17. GRAPHING THE THIRD SERIAL. Graphing the third serial is more complicated than the first two. The reason is that the third serial will not be able to clear the SP 10 minutes after the second serial clears the SP because this would cause it to run into the 1100 to 1200 restriction at CP 99. Therefore, compute for the earliest time the first vehicle can leave in order to pass the restriction after the restriction ends at 1200 (plus the 15-minutes safety factor). As shown in Figure E-8, the computation is 1200 (time the restriction ends) plus 15-minute safety factor minus 1 hour (time distance to the restriction [24 km at 24 kmih]) equals 1115. This time (1115) is the earliest time the first vehicle of the third serial can leave the SP. Place a dot at 1115 to show this SP time. Time distance is still 3 hours and 8 minutes. Therefore, the first vehicle of this serial will clear the RP at 1423. Put a dot at 1423 at the top of the graph and connect the two dots.

Since pass time for this serial is 44 minutes, the last vehicle will leave the SP at 1159. Time distance is still 3 hours and 8 minutes. Adding this to the starting time of the trail of the serial gives the clear time for the trail at the RP of 1507. Place dots at the times computed for the trail and connect them as with the two previous serials.

E-18. GRAPHING THE FOURTH SERIAL. Graphing the fourth serial is also more complicated than the others because it must halt at the 1500 to 1530 restriction at CP 105. The first step is to compute the time distance from the SP to the restriction. The distance is 57 km and the rate is 24 kmih. Using the formula to calculate time distance, TD = D ÷ R, 57 ÷ 24 = 2 hours and 23 minutes. Because the last vehicle of the third serial cleared the SP at 1159 and a 10-minute gap is required between serials, the fourth serial cannot begin movement until 1209.

The first vehicle of this serial will arrive at the restriction (CP 105) 2 hours and 23 minutes after it clears the SP, or 1423. Adding the pass time of this serial (42 minutes) to this gives 1514 as the time when the trail vehicle of the serial would clear CP 105 if it moved on without stopping. Since the restriction at this point is from 1500 to 1530, the column must halt at CP 105 and cannot move on until 15 minutes (safety factor) after the restriction ends. Thus the serial begins moving again at 1545.

The remaining distance of 18 km will take 45 minutes (18 km ÷ 24 kmih), so the lead vehicle clears the RP at 1630. The trail vehicle leaves CP 105, 42 minutes after the lead vehicle at 1627 and clears the RP, 45 minutes later at 1712.

E-19. GRAPHING THE FIFTH SERIAL. For the fifth vehicle, as with the third serial, a 10-minute time gap will not work because the fourth serial will be halted on the road for the restriction at CP 104. If the fifth serial was to leave 10 minutes after the fourth serial cleared the SP, it would run into the fourth serial at its halt.

Therefore, compute the earliest time the lead vehicle can leave the SP in order to avoid running into the fourth serial at CP 104. As described in paragraph E-8, first find how long it takes the lead vehicle to travel the 39 km to CP 104: 39 km ÷24 kmih = 1 hour and 38 minutes. The restriction at CP 104 is in effect from 1510 to 1630. Adding the 15-minute safety factor, 1645 is the earliest time at which the lead vehicle of the serial can clear the restriction. Subtracting 1 hour, 38 minutes from 1645 gives 1507 as the earliest time the fifth serial can leave the SP. It will clear the CP 104 at 1645 without halting.

Another problem arises at this point. If the fifth serial leaves at 1507, it will arrive at CP 105 at 1730, 45 minutes after clearing CP 104. Since there is a 1700 to 1830 restriction at CP 105, the serial must halt and wait until 1845 to resume movement. Because this serial has been ordered to disperse off the road at CP 105, the halt is shown differently than with the fourth serial, which halted on the road and occupied road space.

The pass time of this serial must also be recomputed from this point since the movement instructions specified that a slower march rate and larger density apply to movements during darkness after 1835. Accordingly, the rate of march becomes 16 kmih, and vehicle density becomes 48 vehicles per kilometer. To find the new pass time, first calculate the new road space (see Table E-16). To recalculate the new pass time see Table E-17.

Table E-16. Calculating New Road Space

Road space =	number of vehicles vehicle density	+	time gaps x rate 60 minutes
	= 124 + 8 x 16 = 2.6 + 2.2 = 4.8 km		

Table E-17. Recalculating New Pass Time

Pass time =	Road space x 60 min rate	=	$\frac{4.8 \times 60}{16}$ = 18 min

Traveling at 16 kmih, it takes the lead vehicle 1 hour and 8 minutes to travel the remaining 18 km to the RP. It arrives there at 1953 (1845 + 1 hour and 8 minutes). The trail vehicle leaves CP 105, 18 minutes later than the lead vehicle, or at 1903; and arrives at the RP at 2011.

E-20. USING A ROAD MOVEMENT TABLE. Data is taken from the graph and put into a road movement table, which can be issued as an annex to an OPORD for a road movement. Convoy commanders can use the information to track their progress during movement and ensure they arrive and clear each CP on schedule. MRTs, TCPs, and others can use the information for control purposes.

Figure E-9 shows the front and back sides of a sample road movement table. The data in this table is derived from the information found on the graph in Figure E-8.

									Check points				
Serial	Date	Unit/ formation	# of Vehicles	Load class of heaviest vehicle	From	To	Route	Route to SP	Ref	Due (hrs)	Clear (hrs)	Route from RP	Remarks
(a)	(b)	(c)	(d)	(e)	(f)	(g)	(h)	(i)	(j)	(k)	(l)	(m)	(n)
1	23 Feb	2439 Trans Co (Lt Trk) 2440 Trans Co (Lt Trk)	126	21	CP97	CP106	A	N28	CP97(SP) CP99 CP103 CP104 CP105 CP106(RP)	0800 0900 0915 0938 1023 1108	0837 0937 0952 1015 1100 1145	N16	
2	23 Feb	2441 Trans Co (Lt Trk) 2442 Trans Co (Lt Trk)	135	21	CP97	CP106	A	N45	CP97 CP99 CP103 CP104 CP105 CP106	0847 0947 1002 1025 1110 1155	0926 1026 1041 1104 1149 1234	N14	
3	23 Feb	2443 Trans Co (Lt Trk) 2444 Trans Co (Lt Trk) Hq & Hq Det 439th T Bn (Trk)	150	21	CP97	CP106	A	N280	CP97 CP99 CP103 CP104 CP105 CP106	1115 1215 1230 1253 1338 1423	1159 1259 1314 1337 1422 1507	N16	
4	23 Feb	2445 Trans Co (Lt Trk) 2446 Trans Co (Lt Trk)t	144	21	CP97	CP106	A	N4	CP97 CP99 CP103 CP104 CP105 CP106	1209 1309 1324 1347 1432 1630	1251 1351 1406 1429 1627 1712	N53	Halt in place at CP 105 from 1432 to 1545 until restriction ends
5	23 Feb	2447 Trans Co (Lt Trk) 2448 Trans Co (Lt Trk) (attached)	124	21	CP97	CP106	A	N16	CP97 CP99 CP103 CP104 CP105 CP106	1507 1607 1622 1645 1730 1953	1541 1641 1656 1719 1919 2011		Stop at CP 105 from 1730 to 1845 and disperse vehicles until restriction ends. Resume march at 1845.

Figure E-9. Road Movement Table (Front)

MAPS:			
1	AVERAGE SPEED	5	CHECKPOINTS
	Serials 1-4 – 24 kmih		a. Start Points – CP 97
	Serials 5-24 kmih after 1845 – 16 kmih		b. Release Points – CP{ 106
2	AVERAGE DENSITY		c. Other Critical Points – CP 99, CP 103, CP 104, CP 105
	Serials 1-5 – 12 vehicles per km		
	Serial 5 – 47 vehicles per km after 1845	6	Main Routes to Start Points – N28, N45, N280, N4, N16
3	HALTS		
	Fourth serial at CP 105 – 1432 to 1545	7	Main Routes From Release Points – N16, N53
	Fifth serial at CP 105 – 1730 to 1845		
4	ROUTES – Route A		

Figure E-9. Road Movement Table (Back)

Section IV. Road Management Planning

E-21. MOVEMENT PLANNING. Movement planners must manage the planned movement of convoys on controlled MSRs in order to issue movement credits, reroute, or divert. A critical time and point graph is a tool that may be used by movement planners to aid in preventing conflicts at critical points when planning and scheduling movements. It is an alternative method of managing movements from the grid system. Both methods accomplish the same function of tracking the planned itineraries of convoys as they arrive and clear planned checkpoints along MSRs. This method is more detailed and may be useful for planning movements on road networks that have many MSRs crossing each other.

E-22. CRITICAL TIME AND POINT GRAPH. Data for developing a critical time and point graph is taken from highway regulation plans or traffic circulation plans. These plans identify the critical points or checkpoints that will be used to plan movements. Movement planners also receive movement information for preplanned or immediate requirements. Preplanned information is derived from movement graphs or tables used to support the movement program. Immediate requirements are generated on short notice from clearance requests (movement bids).

The movement planner posts the movement data for each movement requirement to the critical time and point graph for the day or days involved. The planner will either confirm the availability of the road network for the requesting unit or makes changes to separate, balance, or distribute based upon command priorities.

An example of a critical time and point graph is shown in Figure E-10. Critical time and point graphs are composed of subgraphs, one for each critical point. The name or number of the critical point is marked along the left margin. Each critical point has four paths, one for each direction (north, south, east, and west). These paths are marked along the left side to show the predominant direction of movement or change of direction. Time is annotated along the top on the vertical divisions of the graph in short time blocks, normally 15 minutes or less. A graph may reflect any time period. However, graphs do not normally exceed 24 hours.

The critical time and point graph reflects a route with three critical points (25, 26, and 27). In this example, the vertical lines represent five-minute time blocks. Two convoys are planned.

- Convoy 225 travelling eastward on MSR Sparrow will arrive at critical point 25 at 0020 and will clear that point at 0040. Therefore, the block representing convoy 225 extends from the arrive time to the clear time.

- Convoy 225 then continues to travel eastward and will arrive at critical point 26 at 0130. At critical point 26, convoy 225 turns northward on MSR Hawk as shown by the flag extending from the eastbound to northbound paths. Changes in direction of travel at critical points are always indicated by a flag extending into the appropriate path on the graph opposite N, S, E, W. Convoy 225 clears critical point 26 about 0145.
- Convoy 226 travelling northward on MSR Hawk arrives at critical point 27 at 0230 and will clear that point at 0300.

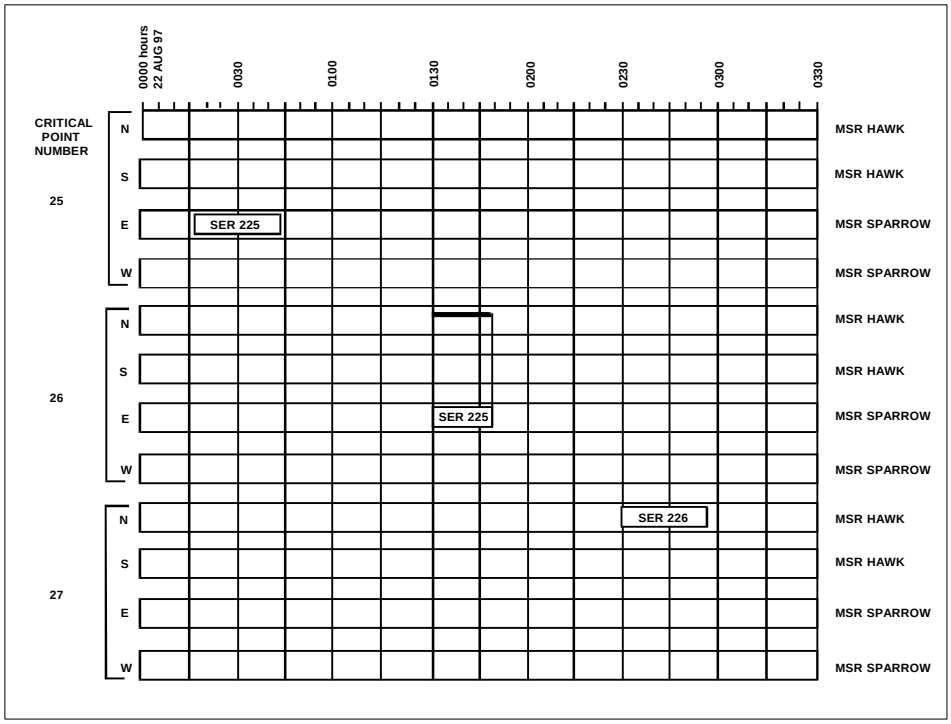

Figure E-10. Critical Time and Point Graph

Critical time and point graphs should be prepared for each MSR in advance for a specified planning period to manage programmed moves over multiple routes. The data for arrive and clear times at critical points can be obtained from movement graphs, movement bids, or automated planning programs such as MOVEPLAN. The planning period will vary depending upon the level of command. Generally, the MCA and MCB work with longer planning periods than does the DTO because movements in the COMMZ and Corps rear area can be programmed further in advance.

On the day of movement, movement planners receive the in-transit status of convoys as reported by MRTs, TCPs, or the moving unit. They check the progress of movement against the critical time and point graph for that day. When a convoy is reported off schedule, they check the

graph for time and space separations from other convoys. If necessary, planners may reroute or stop a movement or reschedule convoys to prevent conflicts. They provide these changes to the affected commands and the MPs.

GLOSSARY

AAC	acquisition advise code
AACG	arrival airfield control groups
AAVS	aerospace audio visual service
AAI	air-to-air interface
ABN	airborne
ACofS	Army Chief of Staff
AALPS/ALM	Automated Air Load Planning System/Air Load Module
ACOM	Atlantic Command
ACR	armored cavalry regiment
A/DACG	arrival/departure airfield control group
ADAO	assistant division aviation officer
AFCC	Air Force Component Commander
AFSCC	Air Force Service Component Command
AIT	automation and information technology
ALOC	air line of communication
ALSS	advanced logistics support site
AMC	Air Mobility Command
AMFT	Automated Movement Flow Tracking
AMMO	ammunition
AMovP	Allied Movement Publication
AO	area of operation
AOR	area of responsibility
APOD	aerial port of debarkation
APOE	aerial port of embarkation
APS	Army pre-positioned stocks; aerial port squadron
AR	Army regulation
ARCENT	Army Component Command
ASCC	Army Service Component Command
ASG	area support group
ASOC	air support operations center
ASP	ammunition supply point
ASR	alternative supply route
ATP	ammunition transfer point
ATTN	attention
AUEL	automated unit equipment list
AUTO	automation
AVN	aviation
AWIS	Army Worldwide Military Command and Control Information System
BDE	brigade
BMCT	branch movement control team
BN	battalion
BR	branch
BSA	brigade/battalion support area

C2	command and control
CAPS II	Consolidated Aerial Port System II
CCP	consolidation and containerization point
CCT	combat control team
CDMC	corps distribution management center
CDR	commander
C-E	communications-electronics
CENTCOM	Central Command
CFMS	CONUS Freight Management System
CHE	container handling equipment
CINC	Commander-in-Chief
CIS	Commonwealth of Independent States (formerly the USSR)
CJCS	Chairman Joint Chiefs of Staff
CMCB	corps movement control battalion
CMD	command
CMMC	corps materiel management center
CMOC	civil/military operations center
CMOS	Cargo Movement Operations System
CO	company
COE	common operating environment
CofS	Chief of Staff
COM	communication
COMMZ	communication zone
COMPT	comptroller
CONPLAN	concept plan
CONUS	continental United States
CONVL	conventional
COORD	coordinate
COP	command operating program
COSCOM	corps support command
CP	checkpoints; convoy planning; command post
CRAF	Civil Reserve Air Fleet
CROP	container roll-in/roll-off platform
CS	corps support
CSA	Corps storage area
CSB	corps support battalion
CSG	corps support group
CSS	combat service support; convoy support site
CSSCS	Combat Service Support Control System
CTMC	combined transportation movement center
CTO	corps transportation office
CTR	container
CULT	common user land transportation
CWO	chief warrant officer
CZ	combat zone

D	distance
DA	Department of the Army
DAAS	Defense Automated Addressing System
DACG	departure airfield control groups
DAMMS-R	Department of the Army Movements Management System-Redesign
DC	District of Columbia
DCG(S)	Deputy Commander for Support
DCSLOG	Deputy Chief of Staff for Logistics
DCSOPS	Deputy Chief of Staff for Operations and Plans
DCST	DLA contingency support team
DDMC	division distribution management center
DDN	Defense Data Network
DEL	deployment equipment list
DEP	deputy
DEST	destination
DET	detachment
DHA	driver holding area
DISCOM	division support command
DIV	division
DLA	Defense Logistics Agency
DMC	distribution management center
DMMC	defense materiel management center
DNVT	Digital Nonsecure Voice Terminal
DOD	Department of Defense
DODAAC	Department of Defense Address Activity Code
DOT	Department of Transportation
DS	direct support
DSA	division support area
DSS	direct support system
DTG	date-time group
DTO	division transportation officer
DTS	Defense Transportation System
DTTS	Defense Transportation Tracking System
EAC	echelons above corps
EEM	early entry module
ENCOM	Engineer Command
ENG	engineer
EPW	enemy prisoner of war
EUCOM	European Command
EUSA	Eighth U.S. Army
FAD	force activity designator
FDRP	first destination reporting point
FEMA	Federal Emergency Management Agency
FIN	finance
FINCOM	Finance Command
FLD	field

FLS	forward logistics site
FM	field manual; frequency modulated
FMCC	force movement control center
FORSCOM	United States Army Forces Command
FRAGO	fragmentary order
FSB	forward support battalion
FWD	forward
G1	Assistant Chief of Staff, G1 (Personnel)
G2	Assistant Chief of Staff, G2 (Intelligence)
G3	Assistant Chief of Staff, G3 (Operations and Plans)
G4	Assistant Chief of Staff, G4 (Logistics)
G5	Assistant Chief of Staff, G5 (Civil Affairs)
G6	Assistant Chief of Staff, G6 (Signal)
GA	Georgia
GCCS	Global Command and Control System
GCCS-A	Global Command and Control System-Army
GCSS-Army	Global Combat Support System-Army
GDSS	Global Decision Support System
GOPAX	Groups Operational Passenger System
GP	group
GPS	Global Positioning System
GS	general support
GTN	Global Transportation Network
H	height
HA	holding area
HET	heavy equipment transporter
HHC	headquarters, headquarters company
HHD	headquarters, headquarters division
HMCT	highway movement control team
HN	host nation
HNLO	host nation liaison office
HNS	host nation support
HNTA	host nation transportation authority
HQ	headquarters
hr	hour(s)
HTD	highway traffic division
HTS	highway traffic section
HVY	heavy
IBS	Integrated Booking System
ICODES	Integrated Computerized Deployment System
ID	identification
IG	Inspector General
INFO	information
ITO	installation transportation office
ITV	in-transit visibility
IWW	inland waterways

J3	Operations Directorate
J4	Logistics Directorate
J5	Plans and Policy Directorate
JTCC	Joint Transportation CIM Center
JA	judge advocate
JCS	Joint Chiefs of Staff
JFC	Joint Forces Command
JLOTS	joint logistics-over-the-shore
JMC	joint movement center
JOAC	Joint Air Operations Center
JOPES	Joint Operations Planning and Execution System
JP	joint publication
JRDC	Joint Regional Defense Commands
JTB	joint transportation board
JTF	Joint Task Force
JTSC	Joint Theater Support Command
km	kilometers
kmih	kilometers in the hour
kmph	kilometers per hour
L	length
lbs	pounds
LIF	Logistics Intelligence Files
LNO	liaison officer
LOC	line of communication
Log	logistics
LOTS	logistics-over-the-shore
LSA	Logistics Support Agency
LSE	Logistics Support Element
LT	light
LZ	landing zone
MA	marshaling area
MACOM	major Army command
MAGTAF	Marine Corps air-ground task force
MC	movement control
MCA	movement control agency
MCB	movement control battalion
MCO	movement control office
MCS	multi-purpose communications and signaling
MCSCC	Marine Corps Service Component Command
MCT	movement control team
MDSS	MAGTF Deployment Support System
MED	medical
MEDCOM	Medical Command
MEDEVAC	medical evacuation
METS	Mechanized Export Traffic System
METT-TC	mission, enemy, terrain, troops, time available, and civilian considerations
Mgmt	management

MHE	materials handling equipment
mih	miles in the hour
MILSTAMP	military standard transportation and movement procedures
min	minute(s)
MLC	military load classification
MLMC	medical logistics management center
MMC	materiel management center
MNT	maintenance
MOVEPLAN	movement plan
MP	military police
MPMIS	Military Police Management Information System
mph	miles per hour
MRO	materiel release order
MRT	movement regulation team
MSC	Military Sealift Command
MSE	mobile subscriber equipment
MSR	main supply route
MSRT	mobile subscriber terminals
MTMC	Military Traffic Management Command
MTMCTEA	Military Traffic Management Command Eastern Area
MTS	Movement Tracking System
MTS-CS	Movement Tracking System-Controller Station
MU	march unit
MVMT	movement
MVMTS	movements
MWO	mobility warrant officer
NAP	not-authorized pre-positioning
NATO	North Atlantic Treaty Organization
NBC	nuclear, biological, and chemical
NCO	noncommissioned officer
NCOIC	noncommissioned officer in charge
NCS	net control station
NEO	noncombatant evacuation operations
NICP	national inventory control point
No.	number
NSCC	Navy Service Component Command
OCONUS	outside the continental United States
Ofc	office
OIC	officer in charge
OPCON	operational control
OPLAN	operation plan
OPNS	operations
OPORD	operation order
OPS	operations
OPTEMPO	operating/operation tempo
PA	public affairs
PACOM	Pacific Command

PAX	passenger
PD	priority designator
PER	personnel
PERS	personnel
PERSCOM	Personnel Command
PHA	passenger loading area
PM	provost marshal
POC	point of contact
POD	port of debarkation
POE	port of embarkation
POL	petroleum, oil, and lubricant
P&P	plans and programs
PP&O	plans, programs, and operations
PPD	plans, programs division
PRAMS	Passenger Reservation and Manifest System
PREPO	prepositioned
PRG	program
PSA	port support activity
Pub	publication
PZ	pickup zone
QTY	quantity
R	rate
RC	reserve component
RDD	required delivery date
RF	radio frequency
RFID	Radio Frequency Identification
RMCT	regional movement control team
ROK	Republic of Korea
ROKA	Republic of Korea Army
ROM	refuel on the move
RORO	roll on/roll off
RP	release point
RR	railroad
RRD	replacement regulating detachment
RSO&I	reception, staging, onward movement, and integration
S1	Adjutant (US Army)
S2	Intelligence Officer (US Army)
S3	Operations and Training Officer (US Army)
S4	Supply Officer (US Army)
S&T	supply and transport
SA	staging area
SAI	surface-to-air interface
SATCOM	satellite communications
SEC	section
SEP	separate
SGT	sergeant
SIG	signal
STACCS	Standard Theater Army Command and Control System

SDD	standard delivery date
SMO	strategic mobility officer
SOF	Special Ops Officer
SOJ4	Special Ops Logistics Officer
SOO	support operations officer
SOP	standard operating procedure
SOUTHCOM	Southern Command
SP	start point
SPM	single port manager
SPOD	sea port of debarkation
SPOE	seaport of embarkation
SPT	support
SRC	standard requirement code
SSA	supply support activity
SSG	staff sergeant
STAMIS	Standard Army Management Information System
STANAG	Standardization Agreement
STARC	state area command
STON	short ton
SUP	support
SVC	service
Svcs	services
SW	Southwest
SWA	Southwest Asia
T	time; ton
TA	theater Army
TAA	tactical assembly area
TAACOM	Theater Army Area Command
TACC	tanker airlift control center
TACP	tactical air control party
TAG	tactical airlift group
TALCE	tanker airlift control element
TALO	theater airlift liaison officer
TAT	to accompany troops
TAV	total asset visibility
TB	technical bulletin
TC	Transportation Corps
TC-ACCIS	Transportation Coordinators-Automated Command and Control Information System
TC-AIMS	Transportation Coordinators-Automated Information Management System
TC-AIMS II	Transportation Coordinators-Automated Information for Movements System II
TCC	transportation component command
TCMD	transportation control and movement document
TCP	traffic control point
TD	time distance
TMCA	Theater Movement Control Agency
TML	terminal

TMMC	Theater Materiel Management Center
TMO	transportation movement officer
TMR	transportation movement release
TMT	transportation motor transport
TOA	transfer of authority; transportation operating agency
TOE	table(s) of organization and equipment
TOFM	Theater-Opening Force Module
TP	transportation priority
TPFDD	time phased force and deployment data
TRADOC	United States Army Training and Doctrine Command
TRANS	transportation
TRANSCOM	Transportation Command
TRK	truck
TRL	trailer
TSA	theater storage area
TSC	Theater Support Command
TTG	transportation terminal group
TTP	trailer transportation point
TUSA	Third US Army
UIC	unit identification code
UMMIPS	Uniform Materiel Movement and Issue Priority System
UMO	unit movement officer
UMT	unit movement team
UN	United Nations
UND	urgency of need designator
UNPROFOR	United Nations Protective Force
US	United States (of America)
USAF	US Air Force
USAREUR	US Army Europe Command
USCENTCOM	United States Central command
USCINCTRANS	United States Commander-in-Chief, Transportation
USEUCOM	United States European Command
USFK	US Forces, Korea
USMC	United States Marine Corps
USPACOM	United States Pacific Command
USTRANSCOM	United States Transportation Command
VEH	vehicle
W	with; width
WOC	wing operation center
WPNS	weapons
WPS	Worldwide Port System
WRKR	wrecker
WT	weight
XL	extra large

REFERENCES

AR 500-10. *Nonindustrial Facilities for Mobilization.* 7 November 1997.
AR 725.50. *Requisition, Receipt, and Issue System.* 15 November 1995.
DA Form 2028. *Recommended Changes to Publications and Blank Forms.* 1 February 1974.
DA Pamphlet 700-30. *Logistic Control Activity (LCA) Information and Procedures.* 17 July 1990.
DA Pamphlet 710-2-1. *Using Unit Supply System (Manual Procedures).* 1 January 1982.
DD Form 1974. *Joint Tactical Airlift Request.* April 1975.
DOD Directive 3005.7. *Emergency Requirements, Allocations, Priorities, and Permits for DOD Use of Domestic Civil Transportation.* 30 May 1985.
DOD Regulation 4500.32-R, Volume I. *Military Standard Transportation and Movement Procedures (MILSTAMP).* 15 March 1987.
FM 5-36. *Route Reconnaissance and Classification.* 10 May 1985.
FM 55-15. *Transportation Reference Data.* 27 October 1997.
FM 55-80. *Army Container Operations.* 13 August 1997.
FM 63-4. *Combat Service Support Operations - Theater Army Area.* 24 September 1984.
FM 71-100. *Division Operations.* 28 August 1996.
FM 100-5. *Operations.* 14 June 1993.
FM 100-7. *Decisive Force: The Army in Theater Operation.* 31 May 1995.
FM 100-10. *Combat Service Support.* 3 October 1995.
FM 100-17. *Mobilization, Deployment, Redeployment, Demobilization.* 28 October 1992.
FM 100-27. *US Army/US Air Force Doctrine for Joint Airborne and Tactical Airlift Operations (AFM 2-50).* 31 January 1985.
FM 101-5. *Staff Organization and Operations.* 31 May 1997.
FORSCOM Regulation 55-1. *Unit Movement Planning.* 1 October 1997.
FORSCOM Regulation 55-2. *Unit Movement Data Reporting.* 31 October 1997.
JP 3-0. *Doctrine for Joint Operations.* 1 February 1995.
JP 4-01. *Joint Doctrine for the Defense Transportation System.* 17 June 1997.
JP 4-01.1. *JTTP for Airlift Support to Joint Operations.* 20 July 1996.
JP 4-01.2. *JTTP for Sealift Support to Joint Operations.* 9 October 1996.
JP 4-01.3. *JTTP for Movement Control.* 21 June 1996.
JP 4-01.5. *Joint Tactics, Techniques, and Procedures for Joint Logistics Over the Shore.* 22 August 1991.
MTMCTEA Pamphlet 700-2. *Logistics Handbook for Strategic Mobility Planning.* April 1994.
TB 55-46-1. *Standard Characteristics (Dimensions, Weight, and Cube) for Transportability of Military Vehicles and Other Outsize/Overweight Equipment.* 1 January 1998.

By Order of the Secretary of the Army:

DENNIS J. REIMER
General, United States Army
Chief of Staff

Official:

JOEL B. HUDSON
Administrative Assistant to the
Secretary of the Army
05656

DISTRIBUTION:

Active Army, Army National Guard, and U.S. Army Reserve: To be distributed in accordance with the initial distribution number 111185, requirements for FM 55-10.

PIN: 023739-000