FM 4-25.12 (FM 21-10-1)

UNIT FIELD SANITATION TEAM

HEADQUARTERS, DEPARTMENT OF THE ARMY

DISTRIBUTION RESTRICTION: Approved for public release; distribution is unlimited.

FIELD MANUAL
NO. 4-25.12

HEADQUARTERS
DEPARTMENT OF THE ARMY
Washington, DC, 25 January 2002

UNIT FIELD SANITATION TEAM

TABLE OF CONTENTS

Page

PREFACE iv

CHAPTER 1. UNIT FIELD SANITATION TEAM DEVELOPMENT
Section I. General 1-1
1-1. Introduction 1-1
1-2. Objective of Field Sanitation Team Training 1-1
1-3. Responsibilites 1-1
1-4. General Guides 1-1
Section II. Master Schedule (20 Hours) 1-2

CHAPTER 2. INSTRUCTOR'S REFERENCE MATERIAL
Section I. Introduction: Relationship Between the Incidence of Disease and the Environment 2-1
2-1. Importance of the Field Sanitation Team 2-1
2-2. The Medical Threat 2-1
2-3. The Individual in a Field Environment 2-4
2-4. Duties of the Field Sanitation Team 2-4
2-5. Preventive Medicine Measures 2-5
Section II. Water Supply 2-6
2-6. Importance of Water in the Practice of Sanitation 2-6
2-7. Responsibilities for the Production of Potable Water in the Field 2-8
2-8. Terms and Definitions 2-8
2-9. Sources of Water 2-9
2-10. Water Treatment 2-10
Section III. Food Service Sanitation 2-16
2-11. Importance of Sanitary Practices in Food Handling 2-16
2-12. Factors that Most Often Cause Foodborne Disease Outbreaks 2-16
2-13. Transportation of Food 2-17
2-14. Storage of Food 2-17
2-15. Personal Hygiene of Food Handlers 2-20
2-16. Cleaning and Sanitizing Utensils 2-21
2-17. Physical Facilities 2-21
2-18. Preparing and Serving Food 2-22
2-19. Inspection of Food Service Facilities 2-23

DISTRIBUTION RESTRICTION: Approved for public release; distribution is unlimited.

*This publication supersedes FM 21-10-1, 11 October 1989.

			Page
Section	**IV.**	**Waste Disposal**	2-23
	2-20.	Importance of Proper Waste Disposal in Disease Prevention	2-23
	2-21.	Responsibilities for Waste Disposal	2-24
	2-22.	Waste Disposal Methods	2-24
	2-23.	Field Facilities for Human Waste Disposal	2-24
	2-24.	Garbage Disposal	2-28
	2-25.	Liquid Waste Disposal	2-29
	2-26.	Rubbish Disposal	2-31
	2-27.	Hazardous Waste Disposal	2-31
Section	**V.**	**Arthropods and Diseases**	2-31
	2-28.	General	2-31
	2-29.	Direct Arthropod Affects on Human Health	2-32
	2-30.	Arthropodborne Diseases	2-34
Section	**VI.**	**Arthropod Control**	2-35
	2-31.	General	2-35
	2-32.	Preventive Medicine Measures	2-36
	2-33.	Chemical Control (Pesticides)	2-38
Section	**VII.**	**The Biology and Control of Rodents**	2-39
	2-34.	General	2-39
	2-35.	Rodents and Human Disease	2-39
	2-36.	Norway Rat	2-41
	2-37.	Roof Rat	2-41
	2-38.	House Mouse	2-42
	2-39.	Equipment Used in Pesticide Applications	2-43
	2-40.	Control Measures	2-44
Section	**VIII.**	**Heat Injuries**	2-47
	2-41.	General	2-47
	2-42.	Predisposing Factors Leading to Heat Injury	2-48
	2-43.	Types of Heat Injury	2-48
	2-44.	Prevention of Heat Injuries	2-49
	2-45.	Use of the Wet Bulb Globe Temperature Index in the Control of Physical Activity	2-54
Section	**IX.**	**Cold Injuries**	2-55
	2-46.	General	2-55
	2-47.	Predisposing Factors	2-55
	2-48.	Prevention of Cold Injuries	2-58
Section	**X.**	**Toxic Industrial Chemical Hazards**	2-62
	2-49.	General	2-62
	2-50.	Routes of Entry	2-62
	2-51.	Toxic Industrial Chemical Classifications	2-62
	2-52.	Chemical Actions and Effects	2-63
	2-53.	Carbon Monoxide	2-64
	2-54.	Hydrogen Chloride	2-65

Page

2-55. Bore/Gun Gases 2-65
2-56. Liquid Chemicals 2-65
2-57. Prevention and Control 2-67
Section XI. Noise Hazards 2-67
2-58. General 2-67
2-59. Factors Determining the Degree of Hazard 2-69
2-60. The Mechanics of Hearing 2-69
2-61. The Effects of Noise on the Ear 2-70
2-62. Preventive Medicine Measures 2-70

APPENDIX A. FIELD SANITATION TEAM TRAINING COURSE A-1
Lesson 1. Introduction A-2
Lesson 2. The Medical Threat to Field Forces and Preventive Medicine Measures A-4
Lesson 3. Personal Hygiene and Preventive Medicine Measures A-10
Lesson 4. Water Supply in the Field A-18
Lesson 5. Food Service Sanitation in the Field A-30
Lesson 6. Waste Disposal in the Field A-40
Lesson 7. Arthropods and Disease A-48
Lesson 8. Management of Arthropods through Individual Preventive Medicine Measures A-54
Lesson 9. Management of Arthropods through Nonchemical (Sanitation) and Chemical Practices A-60
Lesson 10. Rodent Management A-67
Lesson 11. Preventing Heat Injury A-73
Lesson 12. Preventing Cold Injury A-80
Lesson 13. Controlling Toxic Industrial Materials A-89
Lesson 14. Noise Hazards and Noise Management A-101
Lesson 15. Field Sanitation Team Equipment and Supplies A-108

APPENDIX B. CHECKLIST OF EQUIPMENT AND MATERIALS FOR FIELD SANITATION TEAM TRAINING B-1
B-1. Equipment and Materials to be Supplies B-1
B-2. Equipment and Materials which the Student is to Bring to Class B-2

APPENDIX C. FIELD SANITATION TEAM MATERIALS C-1

APPENDIX D. SAMPLE UNIT STANDING OPERATING PROCEDURE FOR FIELD SANITATION D-1

GLOSSARY Glossary-1

REFERENCES References-1

INDEX Index-1

PREFACE

The purpose of this field manual (FM) is to provide doctrine and training procedures for unit field sanitation teams (FST). In addition, a training program in the application of personal protective measures (PPM) is included for personnel appointed as members of the FST for each company, troop, or battery. This publication contains a proposed 20-hour master training schedule which may be adjusted as necessary; a text that may serve as reference material for the FST instructor; and supporting illustrations for the instructors assigned the training task. This publication provides guidance to the commanders, unit leaders, and soldiers for implementing unit field sanitation and preventive medicine (PVNTMED) measures in the field. This publication is written to further aid the commander and his unit leaders in the continuing effort of reducing the disease and nonbattle injury (DNBI) rates during deployments.

This publication provides information on PPM for the unit FST on applying unit-level PPM.

This publication implements or is in consonance with the following North Atlantic Treaty Organization (NATO) International Standardization Agreements (STANAGs), American, British, Canadian, and Australian (ABCA) Quadripartite Standardization Agreements (QSTAGs) and Quadripartite Advisory Publications issued by the Washington Standardization Officers:

NATO STANAG	ABCA QSTAG	TITLE
2048		Chemical Methods of Insect and Rodent Control
2122		Medical Training in First Aid, Basic Hygiene, and Emergency Care. Edition 2. (Latest Amendment, 13 June 1986.)
2136		Minimum Standards of Water Potability in Emergency Situations
	245	Minimum Requirements for Water Potability (Short- and Long-Term Use)
2885		Procedures for the Treatment, Acceptability, and Provision of Potable Water in the Field
2899		Protection of Hearing. Edition 2.
2981		Prevention of Cold Injury
	889	Essential Field Sanitary Requirements
	892	Prevention of Cold Injuries
	891	Prevention of Heat Related Injuries

The staffing and organization structure of the FST is established in the living tables of organization and equipment (TOE). However, such staffing is subject to change to comply with manpower requirements criteria outlined in Army Regulation (AR) 71-32 and can be subsequently changed by your modification TOE.

Users of this publication are encouraged to submit comments and recommendation to improve the publication. Comments should include the page, paragraph, and line(s) of the text where the change is recommended. The proponent for this publication is the US Army Medical Department Center and School (AMEDDC&S). Comments and recommendations should be forward directly to: **Commander, AMEDDC&S, ATTN: MCCS-FCD-L, 1400 Grayson Street, Fort Sam Houston, Texas 78234-5052.**

Use of trade or brand names in this publication is for illustrative purposes only and does not imply endorsement by the Department of Defense (DOD).

Unless this publication states otherwise, masculine nouns and pronouns do not refer exclusively to men.

CHAPTER 1

UNIT FIELD SANITATION TEAM DEVELOPMENT

Section I. GENERAL

1-1. Introduction

Military PVNTMED is: *The identification of the medical threat, assessing the risk of the medical threat in terms of operation requirements, medical surveillance, and the providing of recommendations for the mitigation of adverse health effects. This can include the anticipation, prediction, identification, prevention, and control of communicable diseases including vector-, food-, and waterborne diseases toxic industrial chemicals as well as low level chemical warfare agents.* The US Army has gone to great lengths to eliminate *medical threats* in order to reduce the debilitating illnesses and injuries that has, over the course of American history, caused more casualties than actual battlefield injuries within US Armed Forces. In some cases, debilitating illnesses and injuries have destroyed the fighting effectiveness of many Army units deployed in global environments. The DNBI rates have gradually been lowered since the Civil War. However, it is only through rigid PVNTMED discipline from the highest command headquarters of a deploying force down to the small unit commander. The units and the soldiers within those units are all responsible for seeing that the tenets of PVNTMED are followed (see FM 4-02.17). When a problem exists beyond unit capabilities, the brigade or division PVNTMED section or corps PVNTMED detachments should be called upon to assist in countering the threat.

1-2. Objective of Field Sanitation Team Training

One objective of FST training is to ensure that team members understand their roles and responsibilities. Another objective is to ensure that small units have the PVNTMED resources to ensure basic field sanitation measures, promote personal hygiene, and reduce DNBI rates. Commanders and troops must remember that DNBI is the leading cause of combat ineffectiveness. The medical threat to the force may be the most serious overall threat during current day operations, especially during stability operations and support operations.

1-3. Responsibilities

The commander is responsible for appointing, training, and equipping the FST within his unit (see AR 40-5). Army Regulation 40-5 requires that members of the FST (organic or attached medical or nonmedical personnel) will receive training from supporting medical resources before deployment or field exercises to assure that small units have the PVNTMED resources to operate in adverse disease and/or climatic conditions.

1-4. General Guides

a. Role of the Field Sanitation Team. The role of the FST is to aid the unit commander in protecting the health of the command. This is accomplished by advising and assisting the commander in the many duties essential to reducing DNBI. By providing instruction and supervision, and assisting, inspecting,

and reporting, the FST ensures that appropriate field sanitation facilities are established and maintained; that effective sanitary and control measures are applied; and that effective PMM are practiced.

b. Selection of Team Members.

(1) The first sergeant selects team members, and the commander appoints the personnel whose normal field duties allow them to devote sufficient time to field sanitation activities. Those personnel, whose military occupational specialty and training require full time operation under field conditions, should not be appointed members of the FST. Selected team members should have ample time for FST duties.

(2) The FST consists of at least two soldiers, one of whom must be a noncommissioned officer when organic medical personnel are not available. If available, one member should be a medic and the leader of the FST.

(3) Selected team members should have at least 6 months service remaining with their unit.

c. Training of Team Members.

(1) The training should be conducted under field conditions and with the frequency necessary for the team to maintain proficiency.

(2) Principles and techniques of effective military instruction, including examination, are defined and discussed in FMs 25-4, 25-100, and 25-101.

d. Application of This Manual. The master schedule and lesson plans provided in this publication should be considered as guides to instruction. The content of the material presented during training classes is flexible and may be tailored to the situation and type of units for which the training is to be conducted.

Section II. MASTER SCHEDULE (20 Hours)

PERIOD	SUBJECT	HOURS AND TYPE OF INSTRUCTION	SCOPE OF INSTRUCTION	REFERENCES
1	INTRODUCTION, MEDICAL THREAT AND PMM	1-LECTURE AND CONFERENCE	THE IMPORTANCE OF FST, THE MEDICAL THREAT, PMM, AND THE INDIVIDUAL IN THE FIELD ENVIRONMENT.	AR 40-5; FM 21-10; FM 4-02.17; AND CHAPTER 2 OF THIS PUBLICATION.
2	PERSONAL HYGIENE AND PMM	1-LECTURE AND CONFERENCE	THE ROLE OF THE FST IN RELATION TO THE UNIT COMMANDER AND SOLDIERS. PERSONAL HYGIENE AND PMM NOT DISCUSSED UNDER OTHER SUBJECTS.	AR 40-5; FM 21-10; FM 4-02.17; CHAPTER 2 OF THIS PUBLICATION.

Section II. MASTER SCHEDULE (20 Hours) (*Continued*)

PERIOD	SUBJECT	HOURS AND TYPE OF INSTRUCTION	SCOPE OF INSTRUCTION	REFERENCES
3	WATER SUPPLY	2-LECTURE AND PRACTICAL EXERCISES	IMPORTANCE OF WATER IN THE PRACTICE OF SANITATION INCLUDING WATER AS A VEHICLE IN TRANSMISSION OF DISEASE. QUANTITY OF WATER NEEDED FOR SOLDIERS. PRODUCTION OF POTABLE WATER. CHLORINE RESIDUAL DETERMINATION.	AR 40-5; FM 21-10; FM 4-02.17; STANAG 2136; QSTAG 245; CTA 8-100; AND CHAPTER 2 OF THIS PUBLICATION.
4	FOOD SERVICE SANITATION	1-LECTURE AND DEMONSTRATION	SANITARY FOOD HANDLING PRACTICES. TRANSPORTATION AND STORAGE OF FOOD. FOOD HANDLERS PERSONAL HYGIENE. CLEANING AND SANITIZING UTENSILS AND PHYSICAL FACILITIES. FOOD PREPARATION AND SERVING FOOD. FOOD SERVICE FACILITIES INSPECTION.	AR 40-5; FM 10-23; FM 4-02.17; FM 21-10; FM 8-34; TB MED 530; CHAPTER 2 OF THIS PUBLICATION.
5	WASTE DISPOSAL IN THE FIELD	2-DEMONSTRATION, CONFERENCE, AND PRACTICAL EXERCISE	IMPORTANCE OF PROPER WASTE DISPOSAL IN PREVENTING DISEASES AND PESTS. CONSTRUCTION OF FACILITIES FOR PROPER WASTE DISPOSAL IN THE FIELD. SPECIAL PROBLEMS IN DISPOSAL. MAINTENANCE AND CLOSING OF WASTE DISPOSAL FACILITIES.	AR 40-5; FM 21-10; FM 4-02.17; AND CHAPTER 2 OF THIS PUBLICATION.
6	ARTHROPODS AND DISEASE	1-LECTURE	DIRECT AND INDIRECT WAYS ARTHROPODS AFFECT THE HEALTH OF SOLDIERS.	AR 40-5; FM 21-10; FM 4-02.17; *MILITARY PEST MANAGEMENT HANDBOOK*; AND CHAPTER 2 OF THIS PUBLICATION.
7	CONTROL OF ARTHROPODS THROUGH FIELD SANITATION AND INDIVIDUAL PMM	2-LECTURE AND DEMONSTRATION	ENVIRONMENTAL CONTROL OF ARTHROPODS THROUGH FIELD SANITATION. INDIVIDUAL PMM.	AR 40-5; FM 21-10; FM 4-02.17; *MILITARY PEST MANAGEMENT HANDBOOK*; AND CHAPTER 2 OF THIS PUBLICATION.
8	CONTROL OF ARTHROPODS WITH PESTICIDES	2-LECTURE, DEMONSTRATION, AND PRACTICAL EXERCISE	CHEMICAL CONTROL, TO INCLUDING PESTICIDES AND EQUIPMENT.	AR 40-5; FM 21-10, FM 4-02.17; *MILITARY PEST MANAGEMENT HANDBOOK*; AND SB 3-40.

Section II. MASTER SCHEDULE (20 Hours) (*Continued*)

PERIOD	SUBJECT	HOURS AND TYPE OF INSTRUCTION	SCOPE OF INSTRUCTION	REFERENCES
9	RODENT CONTROL	2-LECTURE, DEMONSTRATION AND PRACTICAL EXERCISE	HABITS OF RODENTS. RELATION OF RODENTS TO HUMAN DISEASE. ENVIRONMENTAL, MECHANICAL, AND CHEMICAL CONTROL MEASURES.	AR 40-5; FM 21-10; FM 4-02.17; *MILITARY PEST MANAGEMENT HANDBOOK*; STANAG 2048; AND CHAPTER 2 OF THIS PUBLICATION.
10	HEAT	1-LECTURE, INJURIES	RECOGNIZE THE TYPES OF HEAT INJURIES, FACTORS INFLUENCING INJURIES, AND PMM.	AR 40-5; TB MED 507; FM 4-02.17; AND CHAPTER 2 OF THIS PUBLICATION.
11	COLD INJURIES	1-LECTURE, DEMONSTRATION, AND PRACTICAL EXERCISE	RECOGNIZE THE TYPES OF COLD INJURIES, FACTORS INFLUENCING INJURIES, AND PMM.	AR 40-5; FM 8-250; FM 4-02.17; DA PAM 40-503; STANAG 2981; AND CHAPTER 2 OF THIS PUBLICATION.
12	TOXIC	1-LECTURE INDUSTRIAL CHEMICAL HAZARDS (NON-NBC)	RECOGNIZE THE TIC THREAT, PLAN FOR TIC, IDENTIFY SOURCES, DEVELOP PROTECTIVE ACTIONS, AND ENFORCE PMM.	AR 40-5; FM 8-250; FM 4-02.17; DA PAM 40-503; AND CHAPTER 2 OF THIS PUBLICATION AND FM 8-500.
13	NOISE HAZARDS	1-LECTURE	RECOGNIZE THE TYPES OF NOISE, THE EFFECTS OF NOISE ON SOLDIERS AND UNIT MISSION, AND PMM.	CHAPTER 2 OF THIS PUBLICATION.
14	EXAMINATION	2-EXAMINATION AND DISCUSSION	A COMPREHENSIVE TEST THAT SERVES AS A VALID, RELIABLE, AND DISCRIMINATING INSTRUMENT FOR EVALUATING THE EFFECTIVENESS OF INSTRUCTION AND INDIVIDUAL STUDENT LEARNING. A DISCUSSION FOLLOWS THE TEST TO ENHANCE STUDENT LEARNING.	FM 25-4; FM 25-100; AND FM 25-101; PLUS ALL LISTED REFERENCES.

CHAPTER 2

INSTRUCTOR'S REFERENCE MATERIAL

Section I. INTRODUCTION: RELATIONSHIP BETWEEN THE INCIDENCE OF DISEASE AND THE ENVIRONMENT

2-1. Importance of the Field Sanitation Team

a. The FST is responsible for those PMM that affect units as a whole or are beyond the resources of the individual soldier (AR 40-5). This is a most important responsibility because unit effectiveness is greatly dependent upon the health of its soldiers. Military units are unable to carry out their missions when the soldiers are weakened by disease. The success or failure of an army, the outcome of a war, and the fate of a nation may, therefore, rest upon how well DNBI are prevented through effective PMM in the units. For example, historical records of armies in the field are filled with accounts of failures for which disease was a major contributing factor. This was true of Napoleon in his retreat from Moscow in 1812. Confronted with cold weather and louseborne typhus, his elite army was almost completely decimated. However, Napoleon's loss is understandable in view of his lack of knowledge concerning the medical threat. Yet, modern armies have also experienced great losses from DNBI. Arthropodborne diseases alone were responsible for the loss of 16,576,100 man–days among US Armed Forces during World War II. The debilitating effects of malaria seriously threatened the entire Asiatic-Pacific campaign during World War II.

b. In today's modern world, we find evidence that careless PMM are devastating to the offending armies. For example, during the Soviet-Afghan War, the Soviets deployed some 620,000 troops to Afghanistan. Of these, only a modest 2.33 percent (14,453) were killed or died of wounds; while an unbelievable 76 percent (469,685) of the Soviet force were hospitalized after contracting serious diseases (infectious hepatitis, typhoid fever, plague, malaria, diphtheria, meningitis, dysentery, pneumonia, typhus, and paratyphus).

c. For the US Army, the forerunner of the present FST was established during World War II. When it became apparent that the control of malaria and other arthropodborne diseases was beyond the capability of existing engineer and medical units, commanders of company-sized units were required to appoint vector-control teams. In 1956, the operation of these teams was broadened to include the control of all animal pests. In 1958, health problems encountered in the field by the American Task Force in Lebanon focused attention on the need for a team with broader training. Subsequently, the vector-control team became the FST with its training expanded to include not only the control of potential animal vectors, but also field water supply, food service sanitation, waste disposal, and personal hygiene. The FST, therefore, plays a major role in reducing DNBI. When the unit commander encounters problems beyond the capabilities of the FST, he requests assistance from supporting PVNTMED elements.

2-2. The Medical Threat

a. The impact of casualties caused by DNBI upon military campaigns has been a prominent and a continuous feature of military operations. From the beginning of recorded history up to the present time, armies have had immense problems with heat, cold, and communicable diseases. In all US conflicts, three times as many soldiers have been lost to DNBI as to enemy action. The ultimate objective of a military force, success in battle, demands that troops be maintained in a constant state of good health.

b. There are three major components of the medical threat to field forces:

(1) *Environmental factors*. These include humidity, and significant elevations above sea level, and, of course, heat and cold. Of these, heat and cold are the most significant.

(*a*) *Heat*. Heat is the most lethal component of all. Those of us born and raised in temperate climates have a hard time relating to heat and its awesome impact. During the 1967 Arab-Israeli conflict, the Israelis enveloped the Egyptians, severing their lines of support. The Egyptians suffered 20,000 deaths due to heat while the Israelis had no deaths and only 128 cases of heat injury. The Israelis demonstrated that health hazards, such as heat, could be as effective as tactical weapons in securing success on the battlefield. In the 1982 US-Sinai Peacekeeping Force, 35 members of an airborne company were incapacitated by the desert heat. These soldiers were so badly dehydrated that they required intravenous fluids to recover. Commanders can minimize the effects of heat by ensuring soldiers drink adequate amounts of water (see paragraph 2-44). Based on the heat category, thirst is a poor indicator of a body's need for water. Commanders should also ensure soldiers consume three meals a day to replace lost electrolytes; and when the tactical situation permits, follow correct work/rest cycles.

(*b*) *Cold*. Cold weather can also be very incapacitating on the battlefield. In World War II, during the winter of 1944-1945 in the European Theater, over 54,000 US soldiers were admitted to hospitals with cold injuries. Over 90,000 US soldiers were admitted with cold injuries throughout the war. In the 24 days the British were in combat on the Falkland Islands, they sustained 777 total casualties, 109 (or 14 percent) were cold injuries. When the British had the Argentinians surrounded at Port Stanley, they could have waited until the Argentinians exhausted their food and water, but they were forced by the adverse environment to attack, thus sustaining additional combat casualties. Commanders can reduce the risk of cold injuries by incorporating weather data into operations planning; enforcing the proper wearing of the uniform; ensuring that soldiers frequently change wet or damp socks; and when the tactical situation permits, providing warming areas.

(2) *Diseases caused by zoonotic/animal bites*. There are many species of arthropods that transmit diseases which seriously affect military operations. Napoleon's Le Grand Armee numbered over 600,000 when it crossed the Russian border in June of 1812. Although he succeeded in taking Moscow, disease and cold injury decimated his troops, forcing his retreat. Only 100,000 men returned to France. There were 70,000 combat losses versus 430,000 DNBI losses. It is estimated that over 100,000 of Napoleon's soldiers were lost to louseborne typhus. Recently, nearly 50 percent of the US units in Grenada were deployed to that tropical environment without insect repellent. At least one unit was using an ineffective Cuban repellent. Commanders must ensure that soldiers use the DOD Insect Repellent System (33 percent DEET [N, N-diethyl-m-tolumide] on skin, permethrin on uniforms, and proper wear of the uniform); use bed nets when appropriate; and consume prescribed prophylactic medications, when necessary.

(3) *Diseases endemic to the area of operations*. Of these, diarrheal disease can be contracted from contaminated water or food, but in either case it can have a catastrophic impact on the fighting force; Rommel's situation in North Africa is a superb example. Not one of Rommel's original highly successful generals was available to help him when he needed them most—at El Alamein; they had all, over time, been medically evacuated for illness. Rommel, himself, was not present when the battle began; he was in Germany recovering from hepatitis. His chief of staff and his intelligence officer were evacuated just

before the battle and his operations officer was evacuated during the battle—all three for amoebic dysentery. In Operation Bright Star, 1980, the US commander rewarded his troops for a job well done by allowing them to go into town the evening prior to redeployment. Thirty percent of his command contracted shigellosis and were simultaneously vomiting and defecating in the aircraft on the flight back to the states. The above examples are just as relevant today as in the past. Commanders must ensure that soldiers only consume food and water from approved sources; that waste disposal and handwashing devices are constructed; and that unit dining facilities are operated under sanitary conditions.

(*a*) The commander's responsibilities are not all-inclusive, but outline a few measures that only the commander can enforce. Emphasis is usually placed on those things the commander himself checks; therefore, it is important for him to appoint and train a functional FST because the ultimate responsibility for ensuring the health of soldiers rests with the commander. Commanders must gain a new awareness of the importance of PVNTMED.

(*b*) The direct relationship between soldier health and success in battle must be emphasized throughout the chain of command. In the Soviet commander's decision-making process, his correlation of forces assesses a degradation of our fighting force over time due to factors such as DNBI. If commanders ignore the medical threat, degradation can be greater over a shorter period. However, with sound PMM, we can maintain our fighting strength and exploit that strength when the enemy expects weakness.

c. In the field, our soldiers have increased vulnerability to DNBI because of—

- The harshness of the environment and the tactical situation. The operational environment may be infested with mosquitoes, sand flies, or other disease carrying pests; it may be hot, dusty deserts or cold, windy plains. Our soldiers and their leaders must be prepared to live and fight in such places.

- The disruption of the body's natural defenses. The human body has an excellent capacity to protect itself against disease and climatic injury; however, the efficiency of these mechanisms is dependent upon our overall well-being. By deploying soldiers halfway around the world, we disrupt their personal biological rhythms. Adding heat or cold, serving meals at irregular hours, and depriving soldiers of sleep soon results in individuals who are more susceptible to illness and combat stress. Additionally, as soldiers have not been exposed to the diseases present in many deployment areas, they are more susceptible to becoming seriously ill from these diseases than the native population. Vectorborne disease may present a hidden threat to deploying units. Immunologically naive soldiers may be at more risk from vectorborne disease than the local populace due to the local populace's relatively higher immunity to them. There may be the mistaken impression that the disease threat is low when it is high for the deployed units; therefore, PMM are essential on all deployments.

- Breakdowns in basic sanitation. Potable water and proper waste disposal are examples of things taken for granted in garrison. Using the latrine or changing your socks becomes a challenge when you are living in a muddy foxhole.

- Consumption of unauthorized rations including locally procured and scavenged food.

2-3. The Individual in a Field Environment

a. Ordinarily, the US soldier has a high standard of personal hygiene when in an environment with convenient facilities. In the field, however, where proper sanitation requires coping with the elements of nature, a problem arises; the soldier is suddenly faced with inconveniences.

b. In garrison, soldiers readily conduct daily personal hygiene. Routine acts of personal hygiene are performed in a conveniently located latrine that is warm and has hot and cold water. However, upon arising in the field, one may feel too cold to change into clean underwear. Even in the summer, a cold-water shower is uncomfortable. Usually, the toilet in the field is not as pleasant as the one in garrison. An ordinarily well-groomed individual may become dirty and unkempt. Filth and disease go hand in hand. Dirty, sweaty socks may cause the feet to be more susceptible to disease. Dirty clothing worn for prolonged periods of time and unwashed hair are open invitations to lice. In addition to keeping uniforms clean, treating with clothing repellent will prevent body louse infestations. The problems entailed in reducing DNBI, therefore, pertain not only to the existing elements of nature but also to the reactions of soldiers brought into the environment. Inadequate individual PMM in the field is one of the most difficult problems to overcome because it requires a sense of responsibility on the part of each individual to try to maintain his health regardless of difficulties encountered.

2-4. Duties of the Field Sanitation Team

The commander establishes the FST duties. Consider the following duties for basic sanitation and arthropod and rodent control:

a. Basic Sanitation and Protection.

(1) Supervise the disinfection of water in the unit area. Instruct soldiers, as necessary, in individual water purification methods (Section II).

(2) Advise the unit food service personnel in the prevention and elimination of deficiencies in food service sanitation. Instruct the soldiers as necessary in methods of washing individual eating utensils (Section III) and dangers of consuming unapproved foods and drinks.

(3) Supervise the construction of garbage and soakage pits and assist the unit commander in inspections for proper disposal of garbage (Section IV).

(4) Supervise the construction of field latrines and urinals and assist the unit commander in inspections for proper sanitation (Section IV).

NOTE

A unit detail is responsible for the actual construction of field waste disposal facilities.

(5) Assist the unit commander in the guidance and inspection of personnel and facilities to ensure a high level of personal hygiene (paragraph 2-5*a*).

(6) Provide guidance as needed in the use of protective measures to prevent arthropodborne disease and heat and cold injuries (paragraph 2-5*b*).

(7) Report deficiencies to the unit commander.

(8) Report possible toxic industrial chemicals (TIC)/toxic industrial materials (TIM) contamination to the unit commander.

(9) Report existing noise sources in your unit and post "NOISE HAZARD" signs near noise hazard areas and on equipment which presents a noise hazard.

(10) The FST advises the unit commander of potential hazards within selected sites.

This paragraph implements and/or is in consonance with STANAG 2048.

b. Arthropod and Rodent Control.

(1) Ensure that practice of proper waste disposal is followed. It is essential for arthropod and rodent control (Section VI) and is in compliance with applicable environmental laws.

(2) Explain to soldiers the ways in which arthropods may affect their health (Section V) and instruct them in the use of PMM (Section VI).

(3) Supervise the application of or apply pesticides as required for arthropod control (Section VI). Be sure to follow product label instructions exactly.

(4) Inspect to ensure the elimination of food and shelter (harborage) for rodents (Section VII).

(5) Supervise the use of traps and authorized rodenticides as required in the control of rodents (Section VII).

(6) Report deficiencies to the unit commander.

2-5. Preventive Medicine Measures

Various aspects of PMM are discussed in relation to water supply (Section II), food service sanitation (Section III), waste disposal (Section IV), arthropod control (Section VI), and rodent control (Section VII). Other aspects of PMM are:

a. Personal Hygiene.

(1) The FST can promote personal hygiene of soldiers by arranging for facilities such as handwashing and showering devices, hot water for shaving, and a heated place to dress. Handwashing devices are provided outside latrine enclosures and in the food service area. They may also be set up at other points in the bivouac area. They are constructed so that they operate easily and must be kept filled with water at all times. All washing and showering devices must have a soakage pit underneath them to prevent water from collecting and forming pools.

(2) The team members provide soldiers guidance or instruction as needed concerning the hazards involved when personal hygiene is neglected. They assist the unit commander in inspecting soldiers and their billets to ensure adequate personal hygiene, including body, hair, and teeth; airing sleeping bags; wearing clean clothes (including socks); and disposing of refuse. Moreover, enforcement of sanitary control measures pertaining to all camp facilities encourages soldiers to have more pride in their personal hygiene.

b. Cold Weather. The FST provides guidance as needed in the use of PMM to prevent cold injuries. Hypothermia or frostbite may be prevented by wearing several layers of warm, loosely fitting clothing; by protecting the face from the wind; and by exercising the face, fingers, and toes to keep them warm. Trench foot, which results from prolonged exposure to wet and/or cold conditions when the temperature is between 32° and 50° Fahrenheit (F) (0° and 10° Celsius [C]), may be prevented by the use of protective footgear and dry socks. Snow blindness, which occurs when the sun shines brightly on unbroken ice or snow, can be prevented by wearing sunglasses or an improvised device made of cardboard or cloth and by blackening the areas around the eyes. See FM 21-10 for information on types of cold injuries and their prevention.

c. Toxic Industrial Chemicals/Materials. The FST provides guidance as needed in the use of PMM to prevent injuries from the use of, or near proximity of TIC/TIM. Identify sources; obtain safer chemicals if possible. Ensure soldiers follow cautions/warnings posted in material safety data sheets (MSDS). Enforce PMM (see FM 21-10, FM 8-500, and paragraph 2-62 in this publication).

d. Noise. First, identify possible noise sources. The FST should ensure all unit members are medically fitted for hearing protection and are issued multiple sets. Isolate the noise source by barrier, if possible.

e. Hot Weather. See Section VIII, paragraphs 2-41 through 2-45.

This section implements and/or is in consonance with STANAGs 2136 and 2885 and QSTAG 245.

Section II. WATER SUPPLY

2-6. Importance of Water in the Practice of Sanitation

a. General. Water is essential to the army in the field. Safe water ranks in importance with ammunition and food as a unit of supply in combat and often has an important bearing on the success or

failure of a mission. When in the field, soldiers must be supplied with sufficient potable water to drink and for personal hygiene (such as shaving, brushing teeth, helmet baths, and comfort cleaning). The water for these purposes must be safe for human consumption and should be reasonably free of objectionable tastes, odors, turbidity, and color. For showering, disinfected nonpotable fresh water is to be used. However, only potable water will be used for showering, bathing, or bodily contact in locations—

(1) Where diseases such as schistosomiasis and leptospirosis are endemic and prevalent.

(2) Where chemical agents may be present.

b. Water as a Vehicle in Disease Transmission. A primary source of illness to the soldier is waterborne disease organisms. Common waterborne diseases of man are hepatitis, typhoid and paratyphoid fever, bacillary and amoebic dysentery, cholera, common diarrhea, leptospirosis, and schistosomiasis (snail fever).

(1) No direct method has been developed for detecting the minimum infectious quantities of these organisms in water; therefore, it is necessary to resort to an indicator test to determine the bacteriological acceptability of water. The water is tested for the presence of coliform bacteria.

(2) Coliform bacteria are found in great numbers in the excreta (feces) of humans, warm-blooded animals, and in soil. Also, many of the diseases mentioned above are spread through feces.

(3) Although the presence of coliform bacteria in water may not prove fecal contamination, it is an indication that pathogenic (disease-carrying) organisms may be present. The indicator test is the best indicator that contamination exists; therefore, we must assume that pathogens are present.

(4) Many military units in the field do not have the capability for determining the presence of coliform bacteria in water; hence all water must be thoroughly treated and disinfected before use.

c. Quantity of Water Required for Soldiers. The quantity of water required for soldiers varies with the season of the year, the geographical area, and the tactical situation.

(1) In a cold climate, only 2 gallons (7.57 liters) of water per soldier per day may be required for drinking purposes even though they are engaged in physical activity.

(2) In a hot climate, 3 or 4 gallons (11.355 to 15.14 liters) per man per day may be required when they are engaged in only sedentary duty.

(3) Additional amounts of water are required for personal hygiene and cooking. A guide for planning to meet the water requirements in an arid zone is 3 to 6 gallons (11.355 to 22.71 liters) per individual per day unless improvised showering facilities are made available. In this case, the requirement should be increased to 15 gallons (56.775 liters) or more.

NOTE

For additional information on water requirements, see FM 10-52.

2-7. Responsibilities for the Production of Potable Water in the Field

a. Army Medical Department. The bacteriological examination of water, as well as chlorine residual and pH (symbol relating the hydrogen ion concentration or activity of a solution to that of a given standard solution) tests under some circumstances, is done by the AMEDD as part of its responsibility for military water supply. The AMEDD establishes standards for water quality; inspects water points or sources; provides advice on potable treatment methods for purification; and after appropriate laboratory or field examination, approves water for consumption.

b. Corps of Engineers. The engineers identify potential sources of water and water point development. The selection of water points may be based on examination of data provided by the AMEDD as well as the reconnaissance performed by the engineers.

c. Quartermaster Corps. The Quartermaster (QM) Corps sets up and operates bulk water treatment equipment. They obtain, treat, and then distribute the treated water. Sometimes, the QM units transport water to centralized distribution points (dry points) for convenient pick up by military units. However, the usual practice is to provide standpipes adjacent to the water point for filling unit water trailers or containers.

d. Unit Commander. Water supply and treatment in the unit are responsibilities of the unit commander. The commander makes certain that the unit has an adequate supply of safe drinking water; enforces the rules of water discipline; and ensures that each individual thoroughly understands the danger of drinking unsafe water. The *rules of water discipline* are to—

(1) Drink approved water only.

(2) Conserve water.

(3) Protect water sources by good sanitary practices.

NOTE

It should be emphasized that water discipline does not imply teaching soldiers to do without water. It means using water intelligently and not wasting it.

2-8. Terms and Definitions

a. Palatable Water. Water that has an agreeable taste and odor.

b. Potable Water. Water that is fit for humans to drink.

c. Water Treatment. Procedures that are used to change the chemical, physical, or microbiological quality of water.

d. Disinfection. A process of killing infectious agents outside the body by direct exposure to chemical or physical agents.

e. Chlorination. A water treatment process that uses chlorine or a chlorine compound.

f. Chlorine Dosage. The total amount of free available chlorine (FAC) or chlorine compound added to a given amount of water.

g. Chlorine Demand. The amount of FAC that is used or consumed by substances in the water before a chlorine residual develops.

h. Chlorine Residual. The amount of FAC left after chlorination has taken place.

i. Parts per Million. A measure of concentration. One part per million (ppm) of chlorine means one part chlorine in 1,000,000 parts of water.

2-9. Sources of Water

The six sources of water that may be used are—

a. Surface. Surface water includes streams, ponds, rivers, and lakes.

b. Ground. Ground water includes wells and springs.

c. Rain. Rainwater is obtained by collecting it from the roofs of buildings or from other catchment surfaces.

d. Ice. Water from melting ice.

e. Snow. Obtained by melting snow.

f. Seawater. Water obtained from oceans or salty seas cannot be used for human consumption until it has been distilled or demineralized to remove the salt.

NOTE

Water taken from any of these sources must be treated before use, as all sources of water in the field are considered contaminated. In selecting a water source, the following factors are considered:

- Military situation.
- Quantity of water needed.
- Accessibility of the source.
- General quality of the source.
- Type of purification equipment available for use.

2-10. Water Treatment

a. General. The objective of water treatment is to produce safe drinking water. Water treatment in the field environment is accomplished through a process called reverse osmosis (RO). The QM Corps employs specialized reverse osmosis water purification units (ROWPU) to produce water. The ROWPU uses the three levels of filtration described below:

(1) The *multimedia filter* provides the first stage of removing matter from raw water. This filter contains activated carbon and sand of varying grain size. The objective is to remove gross particulate matter with the sand, chemicals, and activated carbon.

(2) *Cartridge filtration* provides the second stage for water treatment after it is processed through the multimedia filter. The cartridge filter consists of woven fabric tubes that are inserted in a cartridge. The filter tubes act as micron filters, removing fine particulate matter carried over from the multimedia filter.

(3) *Reverse osmosis* is the final stage of filtration. The RO filter consists of a semipermeable membrane. Under hydrostatic conditions, water will migrate from the side of the semipermeable membrane that has the lower concentration of dissolved or suspended matter to the side with greater concentration. This movement of water through the semipermeable membrane is referred to as osmosis (see Figure 2-1).

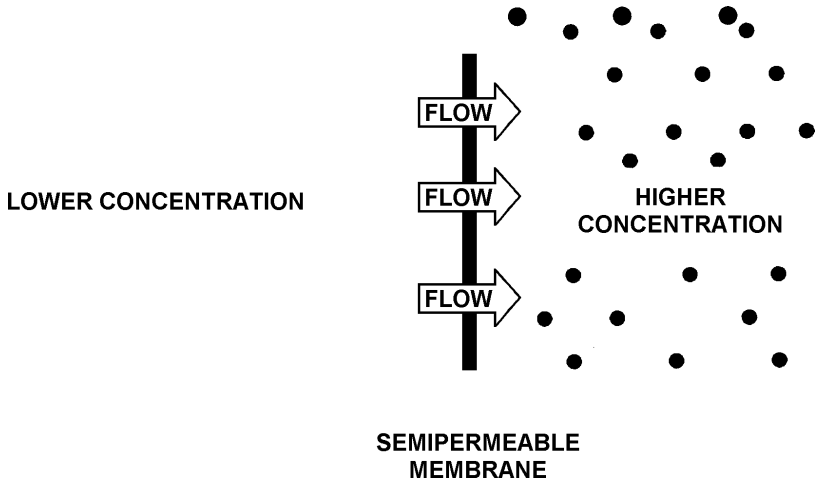

Figure 2-1. Osmosis—water flows through the semipermeable membrane from lower to higher concentration of matter.

In RO, substantial pressure on the side of the higher concentration of matter is increased in order to counter the osmotic pressure and force the water through the semipermeable membrane in the direction opposite to the osmotic flow (see Figure 2-2).

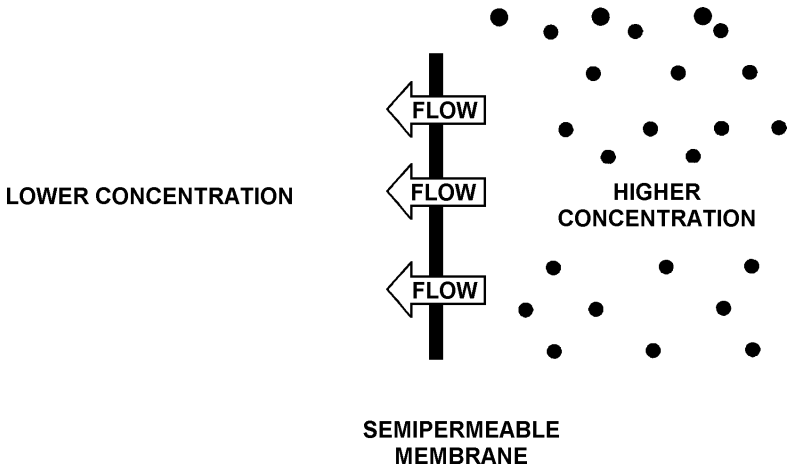

Figure 2-2. Reverse osmosis—water is forced through the semipermeable membrane in the opposite direction of osmotic flow by using high pressure.

b. Water Disinfection. Disinfection is a physical or chemical process of destroying potentially pathogenic organisms in the water. This is accomplished by boiling the water, microfiltration, ultraviolet radiation, using iodine tablets, or calcium hypochlorite.

- Field units employ calcium hypochlorite for disinfecting water. Calcium hypochlorite comes in a white powder making it much easier to use than liquid or gaseous chlorine products. It is the hypochlorite that oxidizes and destroys the pathogen. Since calcium hypochlorite is nearly 72 percent hypochlorite by weight it is approximately 70 percent effective.

- The sudden drop in FAC may indicate contamination and a decrease in protection.

- A contact time of at least 30 minutes is required for satisfactory water disinfection.

NOTE

Experience has proven that in most cases the major portion of the chlorine demand is satisfied within 10 minutes after chlorine dosage is added. Even if the required chlorine residual is present after this period, an additional contact period of 20 minutes is mandatory before the water can be consumed.

- Water treated by a ROWPU requires a chlorine residual of 2 ppm/milligrams per liter (mg/l) after a 30-minute total contact period.

- Emergency field water not treated by a ROWPU requires a chlorine residual of 5 ppm/ mg/l after a 30-minute total contact period.

c. Method of Disinfecting Water.

(1) *Water purification (Lyster) bag and calcium hypochlorite.*

(*a*) This is the most satisfactory and convenient method for disinfecting water for a small unit in the field. The 36-gallon Lyster bag is issued to units on the basis of one per 100 persons. The calcium hypochlorite is issued in ampules for handling convenience. Each ampule contains 0.5 gram of calcium hypochlorite and gives a dosage of approximately 2 ppm/mg/l after initial chlorine demand is met. Several ampules may be added to the water in the Lyster bag. As many ampules as necessary are used to provide the required 5 ppm/mg/l chlorine residual after a 10-minute contact period. After the desired chlorine residual is obtained, the water is allowed to stand for an additional 20 minutes before use. When a residual above 5 ppm/mg/l is desired, the 5 ppm/mg/l chlorine residual after a 10-minute contact is first obtained, then the number of ampules of calcium hypochlorite required to create the desired residual are added. The number required is based on the fact that after the initial chlorine demand is satisfied, one additional ampule will raise the residual approximately 2 ppm/mg/l in 36 gallons of water. After additional chlorine has been added, a 30-minute contact period must be allowed before the water is consumed.

(*b*) The Lyster bag must be cleaned of dirt and debris before it is used and hung by supporting ropes before it is filled with water. The bag is scrubbed and cleaned inside with a solution made with two ampules of calcium hypochlorite dissolved in 1 gallon (3.8 liters) of water.

NOTE

The concentration of chlorine in a solution (one ampule of calcium hypochlorite in 1 gallon of water) is approximately 100 ppm. This may be too low to effectively sanitize the canvas Lyster bag. Thus the recommended concentration is two ampules per gallon for sanitizing the Lyster bag prior to initial use.

The cleaned bag is filled only to within 4 inches (10 centimeters) from the top. If possible, the water is settled and cleared (perhaps even strained through a cloth) before it is poured into the Lyster bag. Do not pour in the settlings. Before the calcium hypochlorite is added, it is first dissolved in a canteen cup with a small amount of water taken from the Lyster bag. As this mixture is poured into the Lyster bag, the water is stirred with a clean stick. Then the faucets are flushed with a small quantity of water. After 10 minutes, the faucets are flushed again and the chlorine residual is determined (see paragraph *d* below). The sample must not be collected in the same cup or container used to dissolve the calcium hypochlorite.

(2) *The 400-gallon (1,514-liter) water trailer and calcium hypochlorite.*

(*a*) When the water trailer arrives in the unit area from the refill point, ***always*** check the chlorine residual. This verifies that the water contains the correct chlorine residual. The chlorine residual should be at the level established for the area of operations (AO).

(*b*) If the residual meets the required standard, the water is safe to drink; if not, the water must be rechlorinated to the required level.

NOTE

After rechlorination, the water must be checked periodically to maintain the minimum required level.

NOTE

Heat and sunlight will cause chlorine to evaporate/dissipate more rapidly; therefore, periodic rechlorination may be required.

(*c*) To rechlorinate a full water trailer—

1. Mix one meal, ready-to-eat (MRE) spoonful of calcium hypochlorite from the 6-ounce bottle (or 22 ampules) with 1/2 canteen cup of water.

2. Thoroughly mix the slurry and then add it to the water in the trailer. Use a clean stick or other clean device to mix the chlorine slurry in the water.

3. Flush the four water taps for several seconds. Wait 10 minutes, then flush the taps again and check the chlorine residual; if the residual is at least 1 ppm/mg/l or greater, wait an additional 20 minutes before releasing the water for consumption.

NOTE

If the residual is below that required for the AO, additional chlorine must be added to the water.

1. Mix a slurry as before; however, the amount of chlorine required may be less than one MRE spoonful.

2. Wait 10 minutes and check the chlorine residual; flush the taps again and check the chlorine residual; if the chlorine residual is not adequate, the flushing and testing procedures described above must be repeated.

3. If the residual is 1 ppm/mg/l or greater, wait an additional 20 minutes before releasing the water for consumption.

(3) *The 5-gallon can using calcium hypochlorite*. Water disinfection, using a 5-gallon can, is accomplished by using one ampule of calcium hypochlorite to 1/2 canteen cup of water to disinfect fifteen 5-gallon cans. The desired chlorine residual should be 1 ppm of water.

(4) *Individual containers*. Disinfect individual canteens using iodine tablets or ampules of calcium hypochlorite. The following method is used when soldiers are on the march or on patrol and the only source is raw/unapproved water.

(*a*) One iodine tablet releases 8 ppm/mg/l of iodine as a disinfecting agent; two tablets ensure adequate disinfection of a 1-quart canteen of water (current guidance is two tablets to prevent giardiasis). This amount is normally more than adequate for clear water. However, two tablets are recommended for both clear and cloudy water to ensure adequate disinfection.

1. Place the tablet(s) into the canteen.

2. After 5 minutes, shake the canteen.

3. Loosen the canteen cap and allow the iodine-treated water to seep around the neck of the canteen to kill any organisms harbored there.

4. A minimum contact time of 30 minutes is required for water disinfection using the iodine purification tablets.

NOTE

At the present time, there is no method that may be used in the field to determine the iodine residual.

(*b*) When calcium hypochlorite is used instead of the iodine tablet—

1. Prepare a solution by dissolving the contents of one calcium hypochlorite ampule in 1/2 canteen cup of water.

2. Use the standard 1/2 plastic canteen capful or 1 NBC canteen capful of this concentrate in each canteen of water.

3. After 5 minutes, allow the chlorine-treated water to seep around the neck of the canteen to kill any organisms harbored there.

NOTE

A total of 30-minutes contact time is required before drinking the water. Sometimes the addition of small amounts of chlorine to water causes disagreeable odors or taste to develop. If this occurs, one or more additional canteen caps of the prepared solution will usually correct the condition.

(5) *Plastic containers and household bleach*. Household bleach may be used to disinfect plastic containers. Ensure the bleach is unscented. See FM 21-10 for complete instructions.

(6) *Other containers using calcium hypochlorite*. The procedure for treating other containers of water with calcium hypochlorite is the same as for the Lyster bag except that the amount of chlorine must be adjusted. See FM 21-10 for additional information.

(7) *Boiling water*. This method is used when disinfecting compounds are not available.

- It is not the best method, since there is no residual protection against recontamination.

- Boiling water at a rolling boil for 5 to 10 minutes kills most organisms that are known to cause intestinal diseases.

- In an emergency, even boiling water for 15 seconds will help. Care must be taken to use clean containers for boiling the water.

- After boiling, the water must be stored in a clean, closed container to prevent recontamination.

(8) Commercially available alternatives to water treatment are also available. An example is Chlor-Floc® that combines chlorination for disinfection along with the process of flocculation to remove suspended solids.

d. Determination of Chlorine Residual. The N, N-diethyl-p-phenylene-diamine (DPD) chlorine residual determination kit has been procured and placed in the updated field chlorination kits. The new kit consists of a color comparator with color comparisons for measuring 1, 1.5, 2, 3, 5, and 10 mg/l chlorine residual. The procedure for testing chlorinated water with this kit is as follows:

(1) Treat the water with desired amount of chlorine. Wait 10 minutes.

(2) Fill the comparator with treated water to a level above the uppermost black border.

(3) Open one DPD tablet package and drop the tablet into the comparator. Wait 2 minutes, place your thumb over the opening, and invert the comparator 3 times (this is a must for correct reading).

(4) If the color of the water in the left window marked 1 is the same or darker than the right window marked 1, then the water is acceptable if a 1-mg/l residual is desired. If the color of the water is lighter than the window marked 1, repeat chlorination, wait 10 minutes, and retest the water.

(5) If higher residuals are required, compare the color of the water in the left window with the color of the right window of the required level.

(6) If the colors match or the left window is darker, then the required level has been met.

(7) Wait an additional 20 minutes before drinking the water.

CAUTION

When testing water with the DPD test kit, carefully observe the color changes of the water. When the chlorine residual is above 10 mg/l, the water color will change through the test kit levels, then turn clear. Failure to carefully observe color changes may lead to excessive chlorination of the water supply.

NOTE

Standard ROWPU-produced water is required to have a FAC residual of 2 ppm.

e. Point of Consumption. Water at the point of consumption must show a trace residual. Recommend that water in a 400-gallon trailer have a FAC residual of approximately 1 ppm.

f. Water Consumption under Emergency Conditions. Under emergency conditions in which water is obtained from a natural or unapproved source such as a lake, river, or host nation water distribution system, and no treatment (for example, ROWPU) is available, residuals of 5 ppm should be used.

Section III. FOOD SERVICE SANITATION

2-11. Importance of Sanitary Practices in Food Handling

The conditions under which food is transported, stored, prepared, and served can have a direct bearing on the success or failure of a military mission. Food contaminated with disease-causing microorganisms through improper temperature control or unsanitary practices can result in outbreaks of foodborne disease. All persons who handle food must maintain the highest sanitation standards.

2-12. Factors that Most Often Cause Foodborne Disease Outbreaks

Although the FST does not have to memorize every sanitary standard and regulation, they must use common sense and must be aware of the factors that contribute to foodborne disease outbreaks. The only way to control these factors is through proper supervisory actions. The six factors that most often cause foodborne disease outbreaks are failure to—

- Refrigerate potentially hazardous cold foods and maintain a product temperature of 40°F or below.

- Cook food to proper temperature.
- Maintain potentially hazardous hot foods at a product temperature of 140°F or above.
- Protect foods from cross-contamination.
- Use proper transportation and storage practices.
- Protect food contact surfaces, pots and pans, eating utensils, and cutting boards from contamination.

2-13. Transportation of Food

Vehicles used for transporting food must be clean and completely enclosed, if possible. Vehicles used for transporting garbage, trash, petroleum products, or similar materials must not be used for transporting food unless the vehicles have been properly cleaned and sanitized. If bulk quantities of meat and dairy products are to be transported over a considerable distance, refrigerated containers should be used. Every unit should have clean tarpaulins, boxes, or bags to protect food from contamination. Perishable foods are stocked only at a level commensurate with the capacity of the food storage facilities of the unit.

2-14. Storage of Food

Immediately upon receipt, unit food service personnel must inspect the food. Any food suspected of being unfit for human consumption is referred to the supporting veterinary unit or to the surgeon for disposition instructions.

a. Food Requiring Refrigeration. Food products requiring refrigeration should be stored at a temperature of 40°F (4.4°C) or below. Some units have a refrigerator and a generator as part of their equipment. Each unit with food preparation capabilities, however, is issued an ice chest with a 200-pound (90-kilogram) capacity. Every effort must be made to keep the temperature of food in the ice chest below 45°F (7°C).

b. Potentially Hazardous Foods.

(1) Food items that can support the rapid growth of foodborne disease microorganisms are called potentially hazardous foods (PHF). Foods high in protein, high in moisture, and with a pH (see Glossary for definition) of 4.5 or higher are potentially hazardous. Given the right temperature for a long enough period of time, disease-causing microorganisms can grow rapidly in foods such as—

- Chopped ham.
- Ground meat.

- Potato salad.
- Egg salad.
- Fish.
- Poultry.
- Cut melons.
- Cooked vegetables.
- Raw sprouts.
- Eggs.

(2) Safe product temperatures.

(*a*) Decisions for the type of rations issued are usually beyond the control of the unit. It is of utmost importance that all product temperatures be monitored. Potentially hazardous foods must be stored immediately in the best refrigeration available to maintain a safe product temperature.

(*b*) When serving hot or cold meals in the field, maintaining safe product temperatures of 40°F (5°C) and below or 140°F (60°C) and above can seem like an impossible job. By correctly using equipment that is available and using good supervisory techniques, the job can be done. Failure to maintain a safe product temperature is the leading cause of foodborne disease outbreaks. In addition to disease prevention, temperature control retards food spoilage and loss of culinary quality. When food temperature is not controlled, spoilage will occur sooner. It should be noted that foods containing enough microorganisms or toxins to cause foodborne diseases may not have any changes in odor, taste, or appearance.

(*c*) Safe temperatures are 40°F (4.4°C) or below and 140°F (60°C) or above. Any temperature between 41°F (5°C) and 139°F (59°C) is in the **DANGER ZONE**. Food products may have to be in the danger zone during some periods of preparation. For example, when food is being mixed with other ingredients, chopped, or formed, it is in the danger zone. At each stage of preparing and serving, the product may be exposed to unsafe temperatures and the chance of becoming contaminated. The goal in temperature control is to minimize the time PHF are in the danger zone. This time accumulates—that is, each separate period of time that the food is in the danger zone adds to the limit. Three hours cumulative time is the maximum such food can be in the danger zone and not be a health hazard. After 4 hours in the danger zone, enough bacteria may have grown in the food to cause foodborne disease outbreaks.

(*d*) Transporting PHF from a base camp to troops at other locations requires the use of insulated food containers. Correct use of the insulated food container will help maintain safe product temperatures.

(*e*) For hot foods, preheat the insulated container by using boiling water. Preheating the container helps maintain safe hot food temperatures. When preheated correctly, foods should remain at safe temperatures for 3 to 4 hours. Take the following steps for preheating:

1. Remove the inserts.

2. Pour 2 quarts/liters of boiling water into the container.

3. Close and let the container stand for at least 30 minutes.

4. Pour out enough water to provide room for the inserts.

5. Place the hot food (at least 140°F [60°C]) into the inserts and then place the inserts in the container.

6. Close and fasten the container lid. Label containers with common name of food, date/time filled, and the statement, "Food must be consumed by _____ hours" (a time no greater than 4-hours after filling [for insulated container]).

(*f*) For foods that must remain cold, put crushed ice into the container to prechill it. When correctly prechilled, cold foods should remain at safe temperatures for 3 to 4 hours. Take the following steps for prechilling:

1. Remove the inserts.

2. Put crushed ice or 2 quarts (1.892 liters) of iced water into the container.

3. Close and let the container stand for 30 minutes.

4. Dump out enough ice to provide room for the inserts

5. Place the cold food (below 45°F [7.5°C]) into the inserts and then place the inserts in the container.

6. Close and fasten the container lid. Label containers with common name of food, date/time filled, and the statement, "Food must be consumed by _____ hours" (a time no greater than 4 hours after filling [for insulated containers]).

c. *Semiperishable Food.* Vegetables, such as potatoes and onions, are stored in a dry place on dunnage so air can circulate around them, thus retarding decay and spoilage.

(1) Screened food boxes may be used to keep such items as bread for a short period. These screened boxes are suspended to permit free circulation of air and to protect the food from insects and rodents. The food is covered before it is placed in the boxes to protect it from dust.

(2) Items such as flour, sugar, and rice should be stored in their original containers. They should be placed in metal containers with tightly fitting lids and protected from excessive heat and moisture. Improper storage can result in loss from rodent or insect infestation or from deterioration because of excessive heat or moisture.

d. Acid Food. Acid food or beverages, such as potato salad, tomato juice, lemonade, citrus fruit drink, or other acidified drinks, must never be stored or served in galvanized containers because they are capable of dissolving the zinc which can cause heavy metal poisoning.

2-15. Personal Hygiene of Food Handlers

a. Food handlers can be a primary source of disease and food contamination. The following measures should be taken to minimize this hazard:

- Daily inspection of personnel by supervisors.
- Instructions to food handlers on maintenance of personal hygiene, especially proper hand-washing.
- Provisions for clean uniforms.
- Provisions for adequate toilet and handwashing facilities.
- Referral of ill food handlers to the medical facility.
- Ensure previously ill food handlers are cleared by the medical facility before returning to duty.
- Consideration of diseases prevalent in local area before deciding to use indigenous personnel in food service facilities.
- All cuts on hands, regardless of whether they are obviously infected or not, must be bandaged and then a glove must be worn.
- All food service personnel, to include kitchen police, will **not** use any tobacco products (including smokeless tobacco) in the food service area.

NOTE

Persons who appear ill or have been absent from work because of a communicable disease, including diarrhea, must be referred to the medical treatment facility for determination of fitness for duty before resuming work. Changes to this policy may be directed by the command surgeon based on local conditions.

b. The food service supervisor or other supervisory personnel of the food-handling activity inspects all food service personnel daily at the beginning of their duty shift and observes them throughout the work period for signs of illness. Anyone showing evidence of illness, skin disease, and infected cuts or boils is not permitted to handle food unless cleared by a medical officer. Food workers must thoroughly wash their hands before working with food preparation. Handwashing after visiting the latrine must become an unfailing habit.

2-16. Cleaning and Sanitizing Utensils

a. *Cooking Utensils*. Cooking utensils are washed, rinsed, sanitized, and properly stored after each use.

- In the field, they are scraped free of food particles.
- Washed in hot (120° to 150°F/48.88° to 62°C), soapy water.
- Rinsed in one container of boiling water.
- Sanitized in another container of boiling water or an approved chemical sanitizer.
- Allowed to air dry.
- Stored in a clean covered place that is protected from dust and vermin.

b. *Leftover Potentially Hazardous Foods*. Leftover PHF are extremely dangerous. Leftovers are prohibited in the field food service.

2-17. Physical Facilities

The physical facilities where food is stored, prepared, and served must be free of rats, mice, flies, roaches, ants, and other vermin. Screening and ratproofing methods are used to the greatest extent possible. Repairs are made as soon as the need is indicated.

- Food and utensils are stored in protected places.
- Repairs to facilities should be made as soon as the need arises.
- Proper waste disposal and control methods are used to eliminate arthropod and rodent feeding and breeding places. When pesticides are used, the directions on the container must be followed exactly!

NOTE

Extreme care is taken when using pesticides in the presence of food. All food and food contact surfaces must be protected during the application of pesticides. Pesticides must never be stored in any food storage area. Wash, rinse and sanitize food preparation utensils and surfaces prior to use after pesticide application inside field kitchens. If PVNTMED soldiers or contractors conduct area pesticide applications (fogging or aerial spraying, for example), food preparation areas must be washed, rinsed, and sanitized prior to use.

2-18. Preparing and Serving Food

a. The food service functions should be coordinated to eliminate any unnecessary lapses of time between preparing and serving food. Every effort is made in handling food items to keep them from becoming contaminated, since most foods provide microorganisms with the ideal environment to multiply and in some instances, to produce enough toxins to cause illness.

b. Potentially hazardous foods furnish a very good media for the growth of microorganisms. To keep leftover PHF in the field is setting a unit up for disaster. Meats, milk, and eggs are especially hazardous. Salads, chopped meats, and sandwich fillings require considerable handling during preparation, thus increasing the possibility for contamination.

(1) Such items are, therefore, prepared immediately before serving or promptly refrigerated after preparation.

(*a*) When neither procedure is feasible, as in the case of box lunches, PHF are avoided.

(*b*) Proper storage of leftover food presents a serious problem; meals must be planned to reduce the amount of leftovers.

(*c*) No food items will be retained as leftovers for reuse. Prepared refrigerated items that have not been placed on the serving line may be retained at the correct stated temperatures, but no more than 24 hours.

(*d*) Never save foods such as opened T-Rations, creamed beef, casseroles, or gravies or creamed sauces.

(2) Fresh fruits and vegetables grown in areas where human excreta is used as fertilizer, or where gastrointestinal or parasitic diseases are prevalent, must not be consumed raw except with the approval of the medical authority. All foods must be obtained from approved sources. Local purchase of fruits, vegetables, or other products is prohibited without written approval from US Army veterinary personnel.

(*a*) When they are authorized for consumption, fruits and vegetables, including leafy vegetables may be served raw if they are taken or broken apart to expose all leaf surfaces. They must be washed with approved detergent according to the packet label instructions and then rinsed with potable water to remove any visible dirt.

(*b*) Where Disinfectant, Food Service, is not available, emergency disinfection of fruits and vegetables may be accomplished by thoroughly washing them, then soaking them for 30 seconds in a 200-ppm/mg/l chlorine solution or by immersing them in potable water at 160°F (71.1°C) for 1 minute. (Prepare the chlorine solution by mixing 1 tablespoon of household liquid bleach [sodium hypochlorite—5-percent] with 1 gallon of potable water.)

NOTE

Fresh fruits and vegetables from other areas must be thoroughly washed and rinsed with potable water before serving. Certain fruits and berries, such as strawberries, cannot be properly washed or readily disinfected; therefore, they should not be served or eaten raw outside the US.

2-19. Inspection of Food Service Facilities

Food service facility inspections are made for the following purposes:

- Identifying basic deficiencies which could cause or spread communicable diseases.
- Recommending corrective measures.
- Providing information and instructions which help food service personnel understand effective sanitation practices and their importance.

The FST can be of great assistance to unit food service personnel in the prevention of such deficiencies; however, FST members are not a replacement for inspections by trained PVNTMED personnel.

Section IV. WASTE DISPOSAL

2-20. Importance of Proper Waste Disposal in Disease Prevention

The proper disposal of all wastes is essential in preventing the spread of diseases. Liquid and solid wastes produced under field conditions may amount to 100 pounds (45 kilograms) per person per day, especially when shower facilities are available. A camp or bivouac area without proper waste disposal methods soon becomes an ideal breeding area for flies, rats, and other vermin and may result in diseases such as dysentery (amoebic and bacillary), typhoid, paratyphoid, and cholera among soldiers.

2-21. Responsibilities for Waste Disposal

a. The unit commander is responsible for proper waste disposal in his unit area. Commanders should check with the Logistics Officer (US Army [S4]) or the supporting PVNTMED officer for assistance with the removal of hazardous waste.

b. The PVNTMED personnel are responsible for inspecting waste facilities and methods of operation. It recommends changes which aid in protecting the health and welfare of soldiers.

2-22. Waste Disposal Methods

There are several disposal methods for the different kinds of wastes, which include—

- Human waste (feces and urine).
- Animal waste.
- Garbage.
- Kitchen and bath liquid waste.
- Rubbish.
- Hazardous waste.

The methods selected for use will depend upon the location of the unit and the military situation. Generally, wastes are buried if the environment, especially soil conditions, and local regulations permit.

2-23. Field Facilities for Human Waste Disposal

a. General. Human waste disposal becomes a problem for both the individual and the unit in the field. Local, state, federal, and host-nation regulations or laws may prohibit burning or burial of waste. Chemical latrines are the preferred human waste disposal devices for use during field exercises or missions. When chemical latrines are not available, individuals and units must use improvised devices as discussed in paragraph *c*, below. During short halts when troops are on a march, each soldier uses a brief relief bag or a "cat-hole" latrine. The cat-hole latrine is dug approximately 1-foot (30-centimeters) deep and is completely covered and packed down after use. In temporary bivouac areas (1 to 3 days), the straddle trench latrine is used unless more permanent facilities are provided for the unit. When setting up a temporary camp, a deep-pit latrine and urine soakage pits are usually constructed. Alternate devices, which may be used to dispose of human waste in the field, are the burn-out, mound, bored-hole, or pail latrines (see FM 21-10). The burn-out latrine is the preferred method for improvised devices. If possible, urinals should be provided in these facilities to prevent soiling the toilet seats. The numbers of latrines are based on one commode or urinal per 25 male soldiers and one commode per 17 female soldiers.

(1) Latrines are so constructed to prevent the contamination of food and water. They are located at least 100 yards (90 meters) downwind (prevailing wind) and down gradient from the unit food service facility and at least 100 feet (30 meters) from any unit ground water source. They should never be placed above gradient of the unit food service facility. For further protection, latrines are not dug to the ground water level or in places where pit contents may drain into the water source. Usually they are built at least 30 yards (30 meters) from the border of the unit area but within a reasonable distance for easy access. A drainage ditch is dug around the edges of the latrine enclosure to keep out rainwater and other surface water. A handwashing device is installed outside each latrine enclosure; these devices should be easy to operate and kept full of water. Each individual must wash his hands after he uses the latrine.

(2) When a latrine is filled to within 1 foot (30 centimeters) of the ground surface or when it is to be abandoned, it is closed in the following manner. The pit is filled to the ground surface in 3-inch (8-centimeter) layers; each layer is compacted. This is to prevent fly pupae from hatching and gaining access to the open air. Dirt is then compacted over the pit to form a mound at least 1-foot (30-centimeters) high. A sign is posted with the date and the words "closed latrine," if the tactical situation permits.

b. Chemical Latrines.

(1) Chemical latrines are used in the field when federal, state, or local laws prohibit the use of other field latrines. These toilets are self-contained in that they have a holding tank with chemical additives to aid in decomposition of the waste and for odor control. The number of such facilities required is established by the surgeon or other medical authority in the AO.

(2) The facility must be cleaned daily, and the contents pumped out for disposal in a conventional sanitary waste water system. The frequency of emptying is determined by the demand for use of the device.

c. Improvised Devices. When chemical latrines are not available, the following improvised devices can be used.

(1) *Burn-out Latrine.* The burn-out latrine may be provided when the soil is hard, rocky, or frozen, making it difficult to dig a deep pit latrine. It is particularly suitable in areas with high water tables because digging a deep pit is impossible. The burn-out latrine is not used when regulations prohibit open fires or air pollution. Personnel should urinate in a urine disposal facility rather than the burn-out latrine, as more fuel is required to burn out the liquid.

(*a*) To construct a burn-out latrine, an oil drum is cut in half, and handles are welded to the sides of the half drum for easy carrying. A wooden seat with a flyproof, self-closing lid is placed on top of the drum.

(*b*) The latrine is burned out daily by adding sufficient fuel to incinerate the fecal matter. A mixture of 1 quart (1 liter) of gasoline to 4 quarts (4 liters) of diesel oil is effective, but must be used with caution. If possible, have two sets of drums, one set for use while the other set is being burned clean. If the contents are not rendered dry and odorless by one burning, they should be burned again. Any remaining ash should be buried.

DANGER

Highly volatile fuel such as JP4 (jet propulsion fuel, grade 4) should not be used because of its explosive nature.

(2) *Straddle Trench Latrine*. The trench is dug 1-foot (30-centimeters) wide, $2^1/_2$-feet (75-centimeters) deep, and 4-feet (120-centimeters) long. Two feet (60 centimeters) of length are allowed per person. These trenches, which are constructed parallel to one another, are spaced at least 2-feet (60-centimeters) apart. Since there are no seats on this type of latrine, boards may be placed along both sides of the trench to provide sure footing. As the earth is removed, it is piled at one end of the trench, and a shovel or paddle is provided so that each soldier can promptly cover his excreta. Toilet paper is placed on suitable holders and protected from bad weather by a tin can or other covering. The straddle trench latrine is closed, using the same method described in *a*(2) above.

(3) *Deep Pit Latrine*. The deep pit is used with the standard latrine box which is issued to or built by the unit. The two-seat box is 4-feet (120-centimeters) long, $2^1/_2$-feet (75-centimeters) wide at the base, and 18-inches (45-centimeters) high. A four-seat box 8-feet (240-centimeters) long, $2^1/_2$-feet (75-centimeters) wide at the base, and 18-inches (45-centimeters) high may be built by the unit using scrap lumber or other material.

(*a*) The pit is dug 2-feet (60-centimeters) wide and either $3^1/_2$- or $7^1/_2$-feet (105- or 225-centimeters) long, depending upon the size of the latrine box. This allows 3 inches (8 centimeters) of earth on each side of the pit to support the latrine box. The depth of the pit depends on the estimated length of time the latrine will be used. As a guide, a depth of 1 foot (30 centimeters) is allowed for each week of estimated use, plus 1 foot (30 centimeters) of depth for dirt cover. Generally, it is not desirable to dig the pit more than 6-feet (2-meters) deep because of the danger of the walls caving in. Rocks or high ground water levels may also limit the depth of the pit. In some soils, supports of planking or other material may be necessary to prevent the walls from caving in.

(*b*) To prevent fly breeding and to reduce odors, the latrine box must be kept clean, the lids closed, and all cracks sealed. If a fly problem exists, they may be controlled by the application of a residual pesticide. Control effects should be based upon fly surveys and pesticides applied in accordance with label directions. Pit contents should not be sprayed routinely since flies can develop resistance to pesticides if used over and over. The latrine boxes and seats are scrubbed daily with soap and water. Using lime in the pit or burning out the pit contents is not effective for fly or odor control; therefore, these methods are not recommended. The deep pit latrine is closed as described in *a*(2) above.

(4) *Mound Latrine*.

(*a*) This latrine may be used when a high ground water level or a rock formation near the ground surface prevents digging a deep pit. A dirt mound makes it possible to build a deep pit and still not extend it into the ground water or rock.

(*b*) A mound of earth with a top at least 6-feet (2-meters) wide and 12-feet (4-meters) long is formed so that a four-seat latrine box may be placed on top of it. It is made high enough to meet the pit's requirement for depth, allowing 1-foot (30-centimeters) from the base of the pit to the level of the ground water or rock level. The mound is formed in approximately 1 foot (30 centimeters) layers. The surface of each layer is compacted before adding the next layer. When the desired height is reached, the pit is then dug in the mound. Wood or other bracing may be needed to prevent the pit walls from caving in. An alternate method is to construct a latrine pit on top of the ground, using lumber, logs, corrugated sheet metal, or whatever other material is available; to pile dirt around it and up to the brim, thus creating the mound around the latrine pit. The exact size of the mound base depends upon the type of soil; it should be made large to avoid a steep slope. It may be necessary to provide steps up the slope. The mound latrine is closed as described in *a*(2) above.

(5) *Pail Latrine*. A pail latrine may be built when conditions (populated areas, rocky soil, and marshes) are such that a latrine of another type cannot be constructed. A four-seat latrine box may be converted for use as a pail latrine by placing a hinged door on the rear of the box, adding a floor, and placing a pail under each seat. If the box is located in a building, it should, if possible, be fitted into an opening made in the outer wall so that the rear door of the box can be opened from outside the building. The seats and rear door should be self-closing, and the entire box should be made flyproof. The floor of the box should be made of an impervious material (concrete, if possible) and should slope enough toward the rear to facilitate rapid water drainage used in cleaning the box. A urinal may also be installed in the latrine enclosure with a drainpipe leading to a pail outside. This pail should also be enclosed in a flyproof box. The waste in pails may be disposed of by burning or by hauling to a suitable area and burying. Emptying and hauling containers of waste must be closely supervised to prevent careless spillage. The use of plastic bag liners for pails reduces the risk of accidental spillage. The filled bags are tied at the top; they then are disposed of by burning or burial.

(6) *Urine Disposal Facilities*. Urine disposal facilities should be provided for the males in the command. Urine should be drained from the urinals into a soakage pit, into a standard deep pit latrine if the urinals are constructed in conjunction with the latrine, or into the chemical latrine. The urine may be drained into a pit latrine through a pipe, hose, or trough. If a soakage pit is used, it should be dug 4-feet (1.2-meters) square and 4-feet (1.2-meters) deep and filled with rocks, flattened tin cans, bricks, broken bottles, or similar nonporous rubble.

(*a*) *Urinal pipes*. Urinal pipes should be at least 1 inch (2.5 centimeters) in diameter and approximately 39-inches (1-meter) long and placed at each corner of the soakage pit and, if needed, on the sides halfway between the corners. The pipes are inserted at least 8-inches (20-centimeters) below the surface of the pit with the remaining 28 inches (80 centimeters) slanted outward above the surface. A funnel of tar paper, sheet metal, or similar material is placed in the top of each pipe and covered with a screen.

(*b*) *Urinal trough*. A urinal trough, about 10-feet (3.3-meters) long, is provided when material for its construction is more readily available than pipes. The trough is made of sheet metal or wood with either V- or U-shaped ends. If the trough is made of wood, it is lined with tar paper or metal. The legs supporting the trough are cut slightly shorter on one end where a pipe carries the urine into the soakage pit or latrine pit. A urinal trough about 12-inches (30-centimeters) long is attached to the inside wall of the chemical latrine. A pipe is connected to the trough to drain urine into the latrine holding tank.

(*c*) *Urine soakage pit*. For the urine soakage pit to function properly, soldiers must not urinate on the surface of the pit. The funnels or trough must be cleaned daily with soap and water and the funnels replaced as necessary. Oil and grease must never be poured into the pit, as they will clog it. When a urine soakage pit is to be abandoned or it becomes clogged, it is sprayed with a residual insecticide and mounded over with a 2-foot (60-centimeter) covering of compacted earth.

(*d*) *Urinoil*. In areas where the ground water level is more than 3-feet (1-meter) below the surface, the urinoil is an acceptable substitute for other types of urine disposal facilities. The urinoil is a 55-gallon drum designed to receive and trap urine and to dispose of it into a soakage pit. Urine voided through the screen onto the surface of the oil immediately sinks through the oil to the bottom of the drum. As urine is added, the level rises within the 3-inch diameter pipe and overflows into the $1^1/_2$-inch diameter pipe through the notches cut in the top of this pipe. The oil acts as an effective seal against odors and against fly entrance. The screen on top of the oil is lifted by supporting hooks and cleaned of debris as necessary.

2-24. Garbage Disposal

Garbage is disposed of by burial or incineration. Tactical requirements must be considered in either case. The excavated soil must be concealed; also, smoke and flame may not be tolerated in a tactical situation. In a training situation, environmental protection may rule out burning or burying; therefore, garbage will have to be collected and hauled away.

a. Burial.

(1) Garbage must not be buried within 100 feet (30 meters) of any natural source of water, such as a stream or well, used for cooking or drinking.

(2) The garbage burial area should be a reasonable distance from the kitchen to minimize problems with flies, odor, and appearance.

(3) On a march, in bivouac, or in camps of less than 1-week duration, the kitchen waste is disposed of by burial in pits or trenches. Pits are preferred for overnight halts. They are usually dug 4-feet (1.2-meters) square and 4-feet (1.2-meters) deep. The pit is filled to not more than 1 foot (30 centimeters) from the top; then it is covered, compacted, and mounded with 1 foot (30 centimeters) of earth.

(4) The continuous trench is more adapted to stays of 2 days or more. This method is started by digging a trench about 2-feet (60-centimeters) wide, 4-feet (1.2-meters) deep, and long enough to accommodate the garbage. As in the pit method, the trench is filled to not more than 1 foot (30 centimeters) from the top. The trench is extended as required, and the excavated dirt is used to cover and mound the first deposit. This procedure is repeated daily or as often as garbage is dumped. It is a very efficient field expedient for disposing of garbage.

b. Incineration. In temporary camps of 1 week or more, the garbage is often burned in open incinerators. Excellent types of open incinerators may be constructed from materials that are readily available in any camp area. Since incinerators will not handle wet garbage, it is necessary to separate the

solid from the liquid portions of the garbage. This is done by straining the garbage with a coarse strainer such as an old bucket, salvaged can, or oil drum with holes punched in the bottom. The solids remaining in the strainer are incinerated, and the liquids are poured through a grease trap (paragraph 2-25*a*(3)) into a soakage pit. Since field incinerators create an odor nuisance, they should be located at least 50 yards (50 meters) downwind from the camp.

(1) *Barrel incinerator*. The barrel incinerator will effectively take care of the waste produced by a company-sized unit. This is an excellent dry trash incinerator, but wet material tends to disrupt proper draft and does not burn easily. A stack is made from an oil drum with both ends cut out or with one end cut out and the other end liberally punched with holes to admit draft air. Holes are punched through the sides of the drum and steel rods are inserted. The steel rods create a grate. The drum is set up on rocks, bricks, or other nonflammable material. A fire is built under the drum and the waste is added, one shovelful at a time, on top of the grate.

(2) *Inclined plane incinerator*. The inclined plane incinerator will dispose of the garbage of an entire battalion, CSH, or other unit of similar size. Its effectiveness in combustion and the fact that it is not affected by rain or wind make it an excellent improvised device. However, building the incinerator requires time and skill. A sheet metal plane is inserted through telescoped oil drums from which the ends have been removed. A loading or stoking platform is built; then one end of the plane-drum device is fastened to it, thus creating an inclined plane. A grate is positioned at the lower end of the plane, and a wood or fuel oil fire is built under the grate. After the incinerator becomes hot, drained garbage is placed on the stoking platform. As the garbage dries, it is pushed down the incline in small amounts to burn. Final combustion takes place on the grate.

2-25. Liquid Waste Disposal

a. *Liquid Kitchen Waste*. Liquid kitchen waste accumulates at the rate of 1 to 5 gallons (4 to 19 liters) per man per day.

(1) *Soakage pits*. The liquid kitchen waste is disposed of in the soil by means of soakage pits at or near the place where it is produced. A soakage pit for the disposal of kitchen waste is constructed in the same manner as the soakage pit for urine disposal (paragraph 2-23) except that it is equipped with a grease trap (see (3) below). Two pits are needed for a company, so that each one can have a rest period every other day. In porous soil, a soakage pit 4-feet (1.2-meters) square and 4-feet (1.2-meters) deep will take care of 200 gallons (760 liters) of liquid per day. In camps of long duration, each soakage pit should be given a rest period of 1 week every month. Even though precautionary measures are taken, a pit may become clogged with organic material.

(2) *Soakage trenches*. If the ground water table is high or a rock stratum is encountered near the surface, soakage trenches may be substituted for soakage pits. These trenches are extended outward from each corner of a central pit dug 2-feet (60-centimeters) square and 1-foot (30-centimeters) deep. The trenches are dug 1-foot (30-centimeters) wide and 6-feet (2-meters) or more long. The depth is increased from 1 foot (30 centimeters) at the end joining the pit to 18 inches (45 centimeters) at the outer end. The pit and the trenches are filled with rock, flattened cans, broken bottles, or other coarse contact material. Two

such units should be built for every 200 persons fed, and each unit should be used on alternate days. A grease trap (see (3) below) is employed with this device.

(3) *Grease traps*. The grease trap is a necessary addition to the kitchen soakage pit and trenches. All kitchen liquids are passed through a grease trap to remove food particles and as much grease as possible; otherwise the soakage pits become clogged and useless. There are two types of grease traps—the filter and the baffle.

(*a*) *Filter grease trap*. An oil drum with the top removed and the bottom perforated is filled two-thirds full with crushed rock, or large gravel at the bottom, followed by gravel which has been graded to smaller sizes, and then a 6-inch (15-centimeter) layer of sand, ashes, charcoal, or straw. The top of the drum is covered with burlap or other fabric to strain out the larger pieces of debris. The burlap or other fabric is removed daily, burned or buried, and replaced with a clean piece. The 6-inch layer of filtering material is removed at intervals of once or twice weekly and buried. The barrel is usually placed in the center of the soakage pit with the bottom of the barrel about 2 inches (5 centimeters) below the pit surface.

(*b*) *Baffle grease trap*. The baffle grease trap is the most effective way of removing grease. It is a watertight container divided into entrance and exit chambers by a baffle, the entrance chamber having about twice the capacity of the exit chamber. The lower edge of the baffle hangs within 1 inch (2.5 centimeters) of the bottom. The outlet, a 2-inch (5-centimeter) pipe, is placed from 3 to 6 inches (7.5 to 15 centimeters) below the upper edge of the exit chamber. The baffle grease trap is usually placed on the ground at the side of the soakage pit with the outlet pipe extending 1 foot (30 centimeters) beneath the surface at the center of the pit. The liquid waste is strained of solids and debris before it goes into the entrance chamber of the trap. The strainer is filled two-thirds full with loose straw, hay, or grass. Before the grease trap is used, the chambers are filled with cool water. When warm liquid strikes the cool water in the entrance chamber, the grease rises to the surface and is prevented by the baffle from reaching the outlet to the soakage pit. If the water is warm, proper separation of the grease will not occur. This is often the case in hot climates. The grease retained in the entrance chamber is skimmed from the surface of the water daily or more frequently as required and buried. The trap should be emptied and thoroughly scrubbed with hot, soapy water as often as necessary. The efficiency of this grease trap can be increased by constructing it with multiple baffles. Also, a series of baffle grease traps may be used.

(4) *Evaporation beds*. In a hot, dry climate where heavy clay soil prevents the use of standard soakage pits, evaporation beds may be required. These beds actually involve the processes of evaporation, percolation, and oxidation. Sufficient beds, 8 by 10 feet (240 by 300 centimeters), are constructed to allow 3 square feet (2787 square centimeters) per person per day for kitchen waste and 2 square feet (1858 square centimeters) per person per day for bath waste. The beds are spaced so that the wastes can be distributed to any one of the beds. The beds are constructed by scraping off the topsoil and constructing small dikes around the 8 by 10 feet (240 by 300 centimeters) spaces. These spaces are then spaded to a depth of 10 to 15 inches (25 to 38 centimeters) and the surfaces are raked into a series of ridges and depressions with the ridges approximately 6 inches (15 centimeters) above the depressions. These rows may be formed either lengthwise or crosswise as deemed desirable for best distribution of water. In operation, one bed is flooded during one day with liquid waste to the top of the ridges which is equivalent to an average depth over the bed of 3 inches (7.5 centimeters); the liquid waste is allowed to evaporate and percolate. After about 4 days, this bed is usually sufficiently dry for respading and reforming. The other

beds are flooded on successive days and the same sequence of events is followed. Careful attention must be given to proper rotation and maintenance. It is also essential that the kitchen waste be run through an efficient grease trap before it is allowed to enter the evaporation beds. If these beds are used properly, they create no insect hazard and only a slight odor.

b. Bath and Wash Water. This water is disposed of in the same manner as liquid kitchen waste (*a* above).

2-26. Rubbish Disposal

Combustible rubbish is burned when the tactical situation permits. Other rubbish is either buried or hauled to a suitable disposal site, depending on the tactical situations.

2-27. Hazardous Waste Disposal

Hazardous waste should normally be disposed of through the unit S4 section. Commanders should check with the supporting PVNTMED personnel for information concerning the turn-in of hazardous materials and hazardous waste materials.

Section V. ARTHROPODS AND DISEASES

2-28. General

a. Historically, arthropodborne diseases have caused more casualties than combat injuries. Arthropodborne diseases alone were responsible for the loss of 15,576,000 man-days among US Armed Forces during World War II.

(1) Today, harmful arthropods represent one of the greatest environmental hazard to soldiers in the field. The chain of infection for arthropodborne diseases involves a pathogenic organism in an infected person or animal (the reservoir), an arthropod to transmit the disease (vector), and a susceptible person (the host).

(2) The significance of vector efficiency in disease transmission from reservoir to host is related to many factors. Some of the factors are species-related such as vector reproductive capacity, physiology, morphology, and genetics.

(3) Other factors that affect the vector's ability to transmit disease are physical and related to environmental conditions, such as temperature, moisture, rainfall, pH, weather, geographical and topographical location, photoperiod, and wind.

(4) Soldiers in a field environment must break the chain of infection for arthropodborne disease or arthropod injury by limiting arthropod pest exposures.

b. Arthropods (insects, ticks, mites, spiders, scorpions, and the like) make up over 75 percent of all animal species. Less than 1 percent of the 750,000 species of arthropods are potentially dangerous to humans. However, their impact is significant due to their high numbers and the negative results of their activities. The impact is direct injury and disease transmission to man and other animals; damage to crops; infestation of stored products; and destruction of wooden structures. Still, many species are beneficial as pollinators, predators of other pests, scavengers of waste, manufacturers of food, and a part of the natural balance of nature. However, the economic damage and medical disorders caused by a few arthropods make some pest management practices necessary to control the problem pests. Protection of the soldier from arthropods and arthropodborne diseases is essential to mission accomplishment. Methods of arthropod control are discussed in Section VI.

2-29. Direct Arthropod Affects on Human Health

In addition to disease transmission, arthropods can cause direct injuries to man. Bites, stings, and allergic reactions are three major categories of injuries caused by arthropods. Arthropods also affect man by annoying and disturbing him. The sound of a single mosquito buzzing around your head while your are trying to sleep is annoying. Standing guard with gnats buzzing around your face can be disturbing. Also, finding cockroaches or other insects or parts of insects in your food is disturbing. The problems of arthropod injury and the exaggerated fear of arthropods can even result in psychiatric problems.

a. Biting Arthropods. Arthropods bite to feed, probe (taste), or defend themselves. Most penetrations of human skin are made by mouthparts that are developed for ingesting blood, tissue, and tissue fluids of animals or plants. These bites usually result in the arthropod injecting salivary fluids or regurgitating its digestive tract products into the man or animal. Some biting arthropods can also produce skin injuries. Each individual's reaction to arthropod bites can be very different. Biting arthropods are grouped according to the duration of host contact as (short-term) or prolonged (long-term).

(1) *Short-term host contact*. Most arthropods that bite man have only short-term host contact. Bloodsucking arthropods are frequently winged or highly mobile. This accounts for their ability to quickly attack and escape capture or detection. Some arthropods hide in structures close to the host and only feed when the host is nearby. Others that bite may not have intended to attack, but did so in defense or by mistake. Arthropods can bite in several stages of their development; that is, adult, larvae, or nymph stages. The mouthparts are generally classified into chewing or sucking types. Chewing mouthparts are generally not used for skin penetration. Usually, injuries of this type are not reported, but secondary infections may occur due to bacterial contamination. Sucking mouthparts are structured for skin penetration.

(*a*) *Bloodsucking* (*hematophagous*) *arthropods*. Blood, normally from warmblooded animals (including man), is used both for life support and growth and/or egg development. The mouthparts of sucking arthropods vary greatly in structure from arthropod-to-arthropod. For example, adults of the order *Diptera* (two-winged insects) have the most diverse mouthparts. Only the females of the mosquitoes, black flies, biting midges, horseflies, and deer flies are bloodsuckers, while both males and females of tsetse flies and stable flies are bloodsuckers. The mouthparts are different within each of these families of *Diptera*, but the goal of a blood meal is the same. Other examples of arthropods that are short-term are fleas, true bugs (conenose bugs and bedbugs), and soft ticks.

(*b*) *Nonbloodsucking* (*nonhematophagous*) *arthropods*. Some plant-feeding arthropods and some arthropod predators have piercing/sucking mouthparts, which are capable of penetrating the human skin. Bites from these arthropods can be as painful as bloodsuckers, if not more so. Bites from these arthropods are usually an act of defense.

(2) *Long-term host contact*. Some biting arthropods require a considerable time on the host to complete a normal life cycle. Since a continuous food supply is available on one host, the search for another host is reduced. Most of these arthropods are categorized as parasites. They are classified as either ectoparasites or endoparasites. Ectoparasites (those living outside the host body) may be flat (fleas) or thin (lice) which allows them to travel easily through a hairy environment. Their feet are specialized for holding on to hair. The mouthparts of ticks and mites are designed to anchor their bodies to the host. Endoparasites (those living inside the host body) are usually soft-bodied (fly larvae, mites) without legs or with very short legs; their bodies usually have specially arranged spines or hairs.

b. Stinging Arthropods. Some arthropods affect man by injecting venom (insect toxins) through stingers, fangs, modified front legs, or spines. An arthropod's injection of poison is in defense or to kill prey. Usually, man is envenomized by arthropods in defense of themselves and their nest or eggs.

(1) *Venoms from bites*. Spiders and centipedes are arthropods in the category that uses mouthparts for envenomization. Most spiders use venom to kill prey. Man is not part of a spider's diet. The fangs of many spiders cannot penetrate the human skin. Some species have venom that is more poisonous than other venomous animals, including snakes. Fortunately, most spiders are not aggressive, but will defend themselves and their eggs and/or webs. Antivenom has been developed for the venom of some species of spiders, but they may not be immediately available for use. Some of the more toxic spiders are night hunters, and by day, they hide in clothing and boots that were left on the floor or in tents on the ground. Less common are the bites of centipedes that are also night hunters. In the tropics, some species of centipedes reach 25 centimeters in length; a bite by such a large specimen could be serious.

(2) *Venoms from stings*. The number of soldiers seeking medical assistance because of arthropod bites is far fewer than those seeking aid because of bee, wasp, hornet, or ant stings. Stings from these arthropods are frequently the result of defensive action. A single sting to an allergic person can be fatal. Even to a person who is not strongly allergic, medical complications due to swelling can occur with stings to the face, neck, or throat. Stings usually occur during daylight hours. However, night maneuvers can result in individuals running into paper wasp nests and being stung by wasps trying to protect their nests; or an individual may stand on an anthill and receive numerous stings from the ants trying to protect their nest. Therefore, individuals who are highly sensitive or have severe reactions to stings should carry an emergency first aid kit for stings as prescribed by a physician. Obviously, high-risk persons should use extreme caution in tropical areas. Another venomous arthropod with a potent sting is the scorpion. Scorpions are active at night. During the day scorpions are usually well-hidden from the light; they hide under rocks or in piles of debris outside and in clothing, cabinets, boxes, and footwear indoors. Stings often are the result of individuals walking barefoot or in stocking feet, or because they use their hand to move the object where the scorpion is hiding. Also, stings occur when individuals put on clothing or footgear without first shaking the item to make sure that it is free of unwanted arthropods. Some scorpion venoms are very painful or they may be deadly, while others are not. The absence of initial pain is not always an indication of no problem. The lack of or the nonavailability of antivenom and the possible

medical problems associated with the use of antivenoms, even if they were on hand, are additional reasons for avoiding scorpion stings.

c. Allergy. Allergic reactions are caused by both the bites and stings of arthropods. Additionally, arthropod parts (live or dead) and their body fluids can cause allergic reactions. Allergic reactions are extremely variable in different people ranging from very mild to severe reactions. Highly sensitive persons should be prepared to deal with their problems in case they are bitten, stung, or exposed to other arthropod allergens.

2-30. Arthropodborne Diseases

Diseases transmitted to man by arthropods are some of the most serious known to man. Uncontrolled, these illnesses can cripple or destroy military forces. The effect of these diseases on man can range from a very mild illness to death. For examples of arthropodborne diseases and their vectors see Table 2-1. House flies and other flying insects that are attracted to human wastes or other organic material can spread disease organisms to food and water. The disease organisms or parasites of humans are carried from diseased humans or animals (reservoirs) by arthropods (vectors) to other humans or animals (hosts). By employing individual PMM, soldiers can stop arthropodborne diseases from being a factor in their lives and in their units mission accomplishment. The most common arthropodborne diseases that affect combat troops are discussed below.

Table 2-1. Arthropodborne Diseases and Their Vectors

DISEASE	VECTOR
MALARIA	MOSQUITO
CHAGAS' DISEASE	KISSING BUG (REDUVIID)
LEISHMANIASIS	SAND FLY (PHLEBOTOMINE)
YELLOW FEVER	MOSQUITO
DENGUE FEVER	MOSQUITO
ENCEPHALITIS	MOSQUITO
SANDFLY FEVER OR PHLEBOTOMUS FEVER	SAND FLY (PHLEBOTOMINE)
TYPHUS FEVER (EPIDEMIC)	BODY LOUSE
TYPHUS FEVER (MURINE)	FLEA
SCRUB TYPHUS	LARVAL MITE (CHIGGER)
BUBONIC PLAGUE	FLEA
DYSENTERY	FILTH FLIES (PARTICULARLY THE HOUSE FLY)
TYPHOID FEVER	FLIES AND COCKROACHES (BY FOOD CONTAMINATION)
SPOTTED FEVER	TICK
FILARIASIS (ELEPHANTIASIS)	MOSQUITO
ONCHOCERCIASIS	BLACK FLY

a. Malaria. Malaria is a serious disease occurring most commonly in tropical and semitropical regions. It is caused by a microscopic parasite carried by the *Anopheles* mosquito. This parasite destroys blood cells and causes chills, fever, weakness, and anemia. If untreated, malaria can cause death.

b. Yellow Fever. Yellow fever is a viral disease transmitted by the *Aedes* mosquito. It occurs in tropical Africa, Central America, and tropical South America. Symptoms are fever, headache, backache, jaundice, and internal bleeding. If untreated, yellow fever can result in death.

c. Dengue Fever. Dengue viruses of multiple types are now endemic throughout most tropical areas of the world and are highly endemic in Southeast Asia, the Philippines, West Africa, and northern Australia. Like yellow fever, it is transmitted by the *Aedes* mosquito. Symptoms are fever (lasting about 5 days), intense headaches, skin rash, and muscle pain which can be severe; for this reason, another name for dengue fever is "breakbone" fever. The disease seldom results in death, but the recovery time is usually long and the victim may be fatigued and depressed.

This section implements and/or is in consonance with STANAG 2048.

Section VI. ARTHROPOD CONTROL

2-31. General

Bivouac sites are selected according to well-defined guidelines. The ideal location for a bivouac site is on high, well-drained ground at least 1 mile (1.6 kilometers) from breeding sites of flies and mosquitoes and 1 mile (1.6 kilometers) from native habitations. It is not always possible to bivouac in the ideal location. A unit commander may be faced with unusual arthropod control problems in the vicinity of his campsite. An effective program for arthropodborne disease prevention should consist primarily of sanitation measures, but may include the use of individual PMM, such as bed nets, as well as the application of pesticides. Essential to the operation of an effective control program is an understanding of the life cycles of medically important arthropods and a knowledge of where they can be found in nature. For examples of life cycles of arthropods, see Table 2-2.

Table 2-2. Life Cycles of Arthropods

MEDICALLY IMPORTANT ARTHROPODS	APPROXIMATE DURATION OF LIFE CYCLES AT 72° F (22° C)		WHERE FOUND
FLIES (EXAMPLE: HOUSE FLY)	EGG	10 HOURS	ANIMAL OR HUMAN WASTE, GARBAGE, GRASS, DECOMPOSING ANIMALS, AND MUD CONTAMINATED WITH ORGANIC MATERIAL.
	LARVA	5 DAYS	
	PUPA	5 DAYS	
	ADULT	30 DAYS	
MOSQUITOES (EXAMPLE: AEDES MOSQUITO)	EGG	4 DAYS	STANDING WATER WHICH MAY BE FOUND IN PONDS, TIN CANS, OLD TIRES, AND TREE HOLES.
	LARVA	10 DAYS	
	PUPA	2 DAYS	
	ADULT	14 DAYS	

Table 2-2. Life Cycles of Arthropods (Continued)

MEDICALLY IMPORTANT ARTHROPODS	APPROXIMATE DURATION OF LIFE CYCLES AT 72° F (22° C)		WHERE FOUND
FLEAS (EXAMPLE: ORIENTAL RAT FLEA)	EGG LARVA PUPA ADULT	7 DAYS 15 DAYS 8 DAYS 365 DAYS	NESTS OR BEDS OF ANIMALS.
LICE (EXAMPLE: HUMAN BODY LOUSE)	EGG NYMPH ADULT	7 DAYS 16 DAYS 30 DAYS	HAIR AND CLOTHING OF HUMANS.
COCKROACHES (EXAMPLE: GERMAN COCKROACH)	EGG NYMPH ADULT	30 DAYS 60 DAYS 200 DAYS	CRACKS AND CREVICES WHICH PROVIDE WARMTH, MOISTURE, AND FOOD, SUCH AS AROUND WATER, GARBAGE, AND FOOD STORAGE FACILITIES.
TICKS AND MITES	LIFE CYCLE COMPLETED	6 WEEKS TO 2 YEARS	TALL GRASS, UNDERBRUSH, ANIMAL WATERING PLACES, AND SHADY REST AREAS OF ANIMALS.

2-32. Preventive Medicine Measures

Individual PMM are those which must be used by each soldier. Often they are the only preventive measures available for soldiers in the field. Had the regiment which lost 403 men to scrub typhus in Dutch New Guinea during World War II used individual PMM, its history would have been different. Those PMM can be accomplished by the soldier at work and at rest.

a. The Department of Defense Insect Repellent System. The best strategy for defense against insects and other disease-bearing arthropods is use of the DOD Insect Repellent System. This system includes the application of extended duration 33 percent DEET repellent to exposed skin, the application of permethrin to the field uniform, and a properly worn uniform. When used, the DOD Insect Repellent System can provide nearly complete protection from arthropodborne disease. It is important to note that not all arthropod species are equally repelled by a particular repellent so one should not discontinue using repellents if some bites are received as other species that are present are still likely to be repelled. Further, some insect species bite primarily during the day whereas others only at night. This is true even within a pest group like mosquitoes so that a lack of bites during the day does not mean that protective measures will not be needed at night.

NOTE

The DOD Insect Repellent System is a concept that brings the three components discussed below into a unified approach to protection. Without implementing the DOD Insect Repellent System concept, the use of the three components independently will provide inferior protection. See Armed Forces Pest Management Board Technical Information Memorandum No. 36.

b. Preventive Medicine Measures for the Soldier at Work.

(1) *Clothing*. The battle dress uniform worn loosely with the pants tucked into the boots without blousing rubbers and with the sleeves down and buttoned increases protection for the soldier. Wearing the uniform in this way makes it more difficult for mites and ticks to get under the clothing. A mosquito can bite through the clothing only when it is worn tightly against the skin.

(2) *Clothing repellent application*. Repellents are available that have been designed specifically for use on uniforms and other cloth items. Clothing repellents are able to withstand repeated launderings or wettings without losing their repellent properties and so protect soldiers against mosquitoes, chiggers, ticks, and other pests. Detailed directions for use of these materials vary with the specific item and with the type of clothing being treated. The clothing repellent available for use is permethrin. The product label instructions *must* be carefully followed.

(3) *Personal use or skin repellent application*. The repellent for personal use, applied directly to the skin, is 33 percent DEET (NSN 6840-01-284-3982) which provides protection against mosquitoes, other biting *Diptera*, and fleas and is relatively effective against ticks and chiggers. It is important that DEET is used when exposed to the threat of arthropodborne disease. Usually, a small amount of the military issue repellent rubbed between the hands and spread evenly over the face, neck, and hands, and other exposed skin areas offers protection for many hours.

CAUTION

Be careful to keep the repellent out of the eyes.

The repellent is lost from the skin by washing, abrasion, absorption, and evaporation and must be reapplied as required. The effectiveness of the DEET is lost more rapidly in hot, humid climates where profuse sweating occurs. If clothing repellents are not available, personal repellents can be applied to the shoulders and other areas of the clothing where the cloth fits tightly against the body to reduce insect bites. However, permethrin clothing repellents are the products of choice for providing protection from bites through uniform items (see previous paragraph).

c. Preventive Medicine Measures for the Soldier at Rest.

(1) *Screened billets*. Screened billets are a desirable protective measure, but it is not always possible to provide them in the field.

(2) *Bed net*. The bed net is a necessity even if the billets are screened. This device is composed of four support poles and a net. One pole is attached to each corner of the bed and the net is suspended from, not draped over, the poles, and tucked securely under the mattress except for an entrance port. The net is then inspected for holes and repaired as needed. After crawling through the entrance port, the occupant tucks the remainder of the edge of the net under the mattress. Care must be taken not to come in contact with the net, as insects can bite through it. Nets must be inspected daily for tears and holes; any damage must be repaired before use. Permethrin clothing treatment should be applied to bed nets to protect against very small biting insects that can pass through the netting mesh.

(3) *Aerosol insecticide*. Use of the aerosol insecticide is the last line of defense. Before getting under a bed net, the occupant sprays the insecticide inside the net according to label instructions.

2-33. Chemical Control (Pesticides)

Pesticides are valuable aids in the control of arthropods. They are used to augment, not replace, field sanitation and individual PMM.

a. Properties. Pesticides are chemical substances. In sufficient quantity, they will kill any animal including man. Sound judgment must, therefore, be exercised in the use of these chemicals. Not only are the chemicals poisonous but other ingredients such as solvents mixed with the chemicals may make them more hazardous. For example, kerosene or fuel oil that is used as a solvent for many modern pesticides makes them more hazardous for humans. The human skin repels water but absorbs oil; therefore, the pesticide is absorbed with the oil. **Refer to the pesticide label for specific protective clothing recommendations and safety precautions**.

b. Precautions. Some liquid pesticides issued to FSTs are flammable; they must not be used around or stored near an open flame. Be sure only authorized, trained personnel use pesticides, and that they **observe all label instructions/directions**. Use the Material Safety Data Sheets (MSDS) issued with each chemical. The MSDS gives the details on the danger associated with chemicals. It also provides information on safety, the way to handle the chemicals, emergency response techniques (see FM 8-500 for chemical hazards), health effects, and storage and proper disposal information. For additional information on precautions see FM 8-500.

c. Arthropod Resistance. Some arthropods, particularly those that reproduce rapidly, often become resistant to the pesticide that is being used. When this is suspected, PVNTMED personnel should be notified. Evidence of pest resistance to insecticides is that despite the fact that chemicals are applied properly, proper sanitation is in effect, and pest exclusion practices are used, a pest population is not controlled.

d. Disposal. All pesticides, pesticide containers, and pesticide-related waste will be disposed of in accordance with product label instructions. The label instructions comply with Environmental Protection Agency requirements. In the event a product is found without label instructions, consult supporting PVNTMED personnel for guidance.

Section VII. THE BIOLOGY AND CONTROL OF RODENTS

2-34. General

Throughout history, the effects of rodents have played an important and often decisive role in man's development. Plague, a disease transmitted from rodents to man by fleas, caused the death of approximately one-fourth of the European population in the Middle Ages. In more recent times, it is estimated that, in the US alone, damage to crops caused by rodents amounts to millions of dollars each year.

a. Rodents consist of a large and varied group of animals including rats, mice, squirrels, chipmunks, and prairie dogs. Rodents are commonly identified by the presence of two sets of chisel-like incisor teeth and the absence of canine teeth. This arrangement of teeth facilitates the rodent's eating habits. Rodents are almost exclusively herbivorous or seedeaters. The exceptions to this are domestic rats and house mice, which eat almost any type of available food.

b. During recent times, three rodent species have associated themselves with man for their primary requirements of food and shelter. These are the Norway rat, the roof rat, and the house mouse. A pictorial key for field identification of these three domestic rodents is provided in Figure 2-3.

2-35. Rodents and Human Disease

Rats are especially harmful to man and domestic animals as carriers of disease. The more important diseases are discussed below.

a. Plague. The bacillus *Yersinia pestis* causes plague. It is primarily a rodent disease transmitted by fleas. Man acquires the disease through contact with infected fleas or animal tissue. The disease is found in many parts of the world including the western US.

b. Murine Typhus. Murine typhus is a rickettsial infection (*Rickettsia mooseri*) transmitted by infected flea feces. Itching from fleabites causes the victim to scratch, thereby rubbing flea feces into the skin.

c. Leptospirosis. Ratborne leptospirosis is caused by a spirochete, *Leptospira icterohemorrhagia*, which lives in the rat's kidneys and is shed in the urine. Man contracts the disease by swimming in contaminated water; by contacting moist infected soil; by touching rat smears which contain infected urine; or by coming in contact with infected animal tissues.

d. Salmonellosis. Rats and mice are most commonly infected with *Salmonella* typhimurium and *Salmonella* enterocolitis. These diseases are spread to man through the infected feces and urine of rats and mice. Infection most commonly occurs as the result of contaminated food or food preparation on contaminated surfaces. Mice are probably more important than rats in the transmission of these diseases. Mice and rats can mechanically transmit other types of pathogens from waste to food.

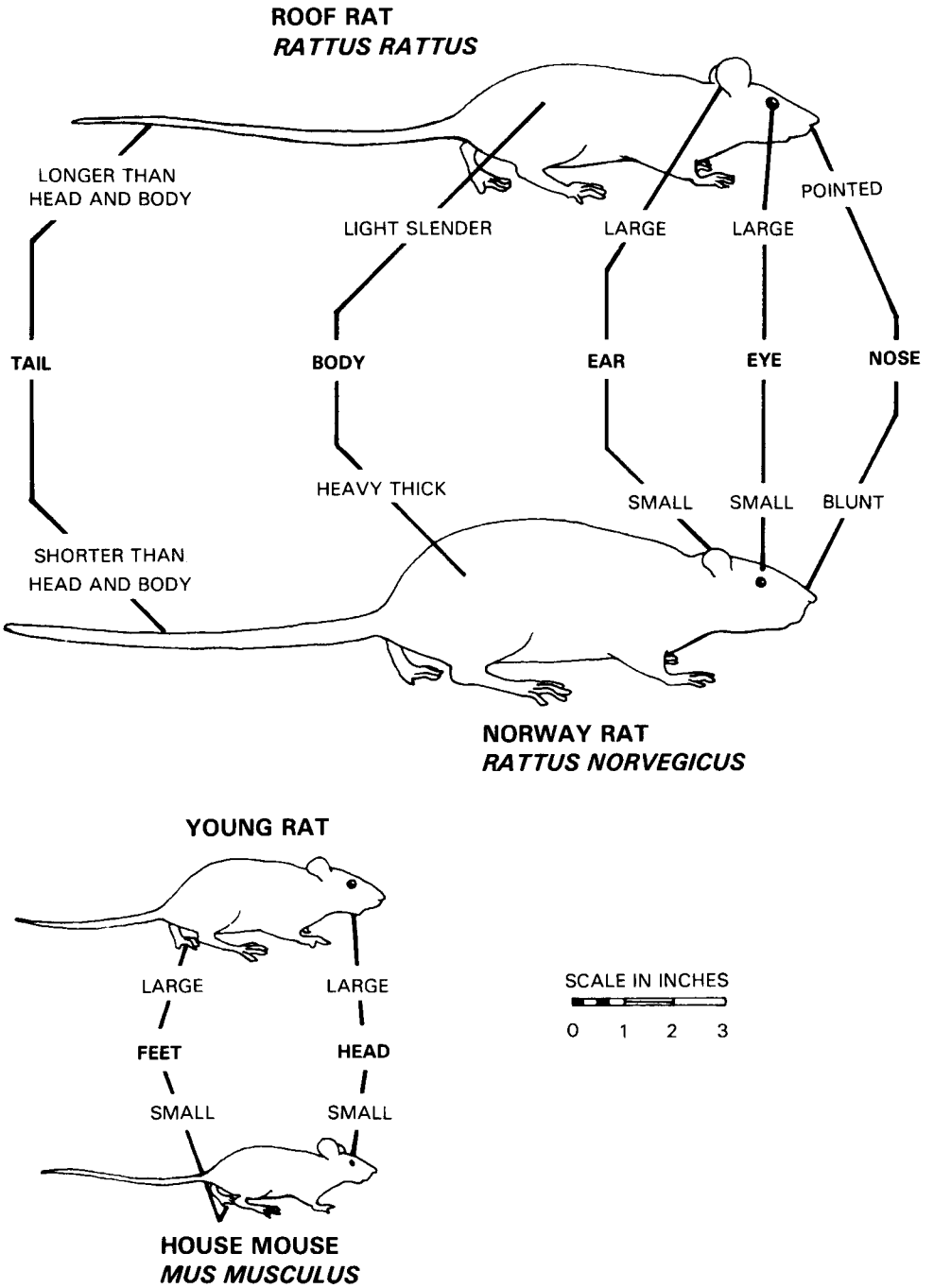

Figure 2-3. A pictorial key of domestic rodents.

e. *Rickettsialpox.* Rickettsialpox is a mild infection caused by *Rickettsia akari* which is transmitted from mice to man by the bite of the house-mouse mite, *Liponyssoides sanguineus*.

f. *Hantavirus.* Hantavirus infects rodents worldwide. Several species have been known for some time to infect humans with varying levels of severity. Their primary effect is on the vascular endothelium and results in increased vascular permeability, hypotensive shock, and hemorrhagic manifestations.

2-36. Norway Rat

a. The Norway rat, *Rattus norvegicus*, has been incriminated in the transmission of a number of diseases to man. They are also capable of damaging large quantities of stored products and transmitting various kinds of food poisoning through contamination with urine or feces.

b. The life span of the Norway rat is approximately 1 year; however, it may live up to 4 years in a laboratory. At 3 to 5 months of age, the rat becomes sexually mature. The gestation period is about 22 days. Therefore, about seven litters can be produced yearly. Normally, a litter will consist of from 8 to 12 young, thus giving a single female a potential of 84 young per year. Fortunately, only about 20 young are actually weaned each year. Due to its close contact with man, the Norway rat has developed an affinity for man's food; therefore, it prefers meat, fish, and garbage. This species normally eats from $^3/_4$ to 1 ounce of food a day and requires about $^1/_2$ to 1 ounce of water. In its search for food, the Norway rat will travel 100 to 150 feet from its harborage. Because it is heavier and less agile than other domestic rodents, the Norway rat is usually found on ground levels. However, these rats are capable of climbing and can jump up to 30-inches (77-centimeters) high and 47-inches (120-centimeters) along the ground. Normally, they burrow into the ground for harborage.

c. The physical characteristics of the Norway rat include the—

- Tail is shorter than the head and body.
- Body is thick with a blunt nose.
- Adult rat weighs approximately 16 ounces.
- Eyes and ears are small.
- Droppings are about $^3/_4$-inch (19-mm) long with blunt ends.

2-37. Roof Rat

a. The roof rat, *Rattus rattus,* is also involved in the transmission of disease and the contamination and destruction of stored products. The Norway rat is generally found in temperate regions, whereas the roof rat is normally restricted to tropical and subtropical locations. The life span of the roof rat is about 1 year.

At about 3 to 5 months of age, the female becomes sexually mature. It is capable of producing six litters of six to eight young annually; however, only about 20 of these are actually weaned. Although the roof rat will eat various types of human food, it prefers vegetables, fruits, or grain. The home range and food and water requirements of this rodent are similar to those of the Norway rat. As opposed to the Norway rat, the roof rat does not burrow in the ground but is found in attics, between walls of buildings, and may nest in trees. These rats can jump up to 30-inches (77-centimeters) high and 59-inches (150-centimeters) along the ground.

b. The physical characteristics of roof rats include the—

- Tail is longer than the head and body.
- Body is slender.
- Adult weighs 8 to 12 ounces.
- Eyes and ears are large.
- Droppings are about $^1/_2$-inch (13-mm) long with tapered ends.

2-38. House Mouse

a. The house mouse, *Mus musculus*, adapts itself to a variety of living conditions and is found throughout the world in close association with man. Although it prefers houses and outbuildings, it has been known to nest in holes gnawed in frozen beef carcasses in storage lockers. The house mouse has a life span of about 1 year and is sexually mature at about 6 weeks. Up to eight litters may be produced each year, with six to eight young per litter. Only about 35 are actually weaned. The house mouse will eat any food available; however, it tends to prefer grain or grain products. It requires about $^1/_{10}$ of an ounce of food and about $^1/_{20}$ of an ounce of water each day. The house mouse can jump about 12-inches (30-centimeters) high and about 18-inches (46-centimeters) along the ground. It will travel no more than about 30-feet (10-meters) from its home in search of food.

b. The physical characteristics of the house mouse include the—

- Body is small.
- Tail is as long as the body and head.
- Adult weighs $^1/_2$ to $^3/_4$ ounce.
- Droppings are about $^1/_4$-inch (6-mm) long with tapered ends (cockroach droppings are slightly smaller and have ridges running along their length).

c. Rodents like to travel along walls, containers, and so forth. Traps should be placed against such structures with the trigger end against the wall so the animals can be trapped no matter which way they

approach the trap. Rats are more cautious than mice. Pre-baiting rat traps (bait traps, but do not set them) for a few days before setting them makes rats comfortable eating safely from them and therefore increases trapping success.

2-39. Equipment Used in Pesticide Applications

Two items of equipment are authorized for use by the FST in applying pesticides (AR 40-5). These items are the rodent bait station and the hand pressure sprayer.

a. Rodent Bait Stations. The rodent bait station is used to apply rodent bait as part of the rodent control program.

b. Hand Pressure Sprayer. The hand pressure sprayer (1- or 2-gallon capacity) is used for most pest control operations. Various makes of this sprayer are available. The instructional manual furnished with each sprayer must be retained and followed concerning its operation and maintenance.

(1) *Sprayer preparation for use*.

(*a*) Fill the sprayer with the insecticide and water mixture, but do not exceed 2 gallons (7.5 liters) and screw the filler cap hand-tight. This permits air space for building up air pressure.

(*b*) Insert the appropriate nozzle for the desired application.

(*c*) Unlock the pump by turning the handle 90 degrees to the left.

(*d*) Pressurize the tank to approximately 40 to 60 pounds per square inch (275 to 415 kilograms per area). If the sprayer does not have a pressure gauge, approximately 30 to 35 pump strokes will usually be sufficient.

(*e*) To increase pump efficiency and ease of operation, put a few drops of lubricating oil on the pump rod at the beginning of each day's operation. No other lubrication is required.

(2) *Sprayer operation*. Operation of the sprayer consists primarily of manipulating the wand of the sprayer to produce an even spray. When a team member is able to cover all of a designated surface with pesticide without it running off the surface, he has mastered the spraying technique. This technique is mastered by means of observation and practice. All pesticide in the sprayer should be used up on the job. Never pour excess pesticide on the ground or down the drain.

(3) *Sprayer maintenance*. Proper maintenance of the sprayer is essential to effective control operations.

(*a*) Cleaning the sprayer. A most important aspect of maintenance is keeping the sprayer clean.

1. After each use, flush and triple-rinse the sprayer with water and wipe off the exterior of the sprayer to prevent the pesticide from crystallizing. The crystals will corrode metal, jam the valves, deteriorate the gaskets, and cause the nozzles to malfunction.

2. Clean the tank and strainers thoroughly any time that the sprayer fails to function properly. Remove the in-line strainer and nozzle strainer; then clean and rinse them thoroughly with water.

(*b*) Replacing worn parts.

1. To replace the piston cup, first remove the pump assembly by pulling the pump handle until the piston rod comes out of the cylinder; then remove the piston-cup screw and retainer and replace the cup with a new one. Place the piston rod into the cylinder, taking care not to damage the piston cup. Replace pump's assembly and tighten securely.

2. To replace the pump cylinder valve, first remove the pump assembly. Remove the valve if worn and replace with a new one. The valve is a push-on, pull-off type construction. Check for sand, soil, or other material under the valve and clean if needed. Replace the pump assembly and pump it to check for pressure leaks and buildup. If leaks are found, remove assembly and repair as needed.

3. To repair the hose, first remove the hose by loosening the hose clamp. Cut off the broken portion from the hose. Put the end of the hose through the hose clamp and on the hose adapter; then screw the hose clamp securely into position. A new hose cut to proper length can be installed by removing both hose clamps and following the procedure outlined above.

2-40. Control Measures

a. Rodent Surveys. Rodents can be a problem in any structure that soldiers inhabit, especially where there is food, water, and shelter (harborage) present. An active rodent survey program should be conducted to look for signs of rodent infestations. These signs include sightings of live or dead rodents, droppings, smudge marks, tracks, gnawings, burrows/holes, nests, sounds, and odors. The earlier an infestation is detected, the easier it is to eliminate.

b. Eliminate Food.

(1) Deny access to garbage by using cans with tight-fitting lids, secured to prevent dislodging by animals. Dispose of garbage regularly, and clean garbage cans regularly.

(2) Store foodstuffs in rodent-proof containers and require unit personnel to store personal food in tightly covered containers.

(3) Clean up all spilled foods.

c. Eliminate Water.

(1) Repair leaking water trailers.

(2) Drain low spots where runoff forms puddles.

(3) Eliminate water-holding items such as old tires, cans, and other refuse.

d. Eliminate Harborage. Rodents rely on concealment for protection while traveling, feeding, and resting. They avoid well-lighted and open spaces as much as possible.

(1) Clean up debris, rubble, building materials, and trash.

(2) Thin or remove dense vegetation; keep fence lines clear of thick growing vines and shrubs.

(3) Minimize weeds, shrubs, and grass adjacent to buildings and tentage.

(4) Trim tree limbs that overhang roofs.

(5) Keep areas free of clutter and debris.

(6) Stack stored materials away from walls.

(7) Deny access to potential nesting materials such as paper, cloth, and straw.

e. Trap Rodents.

(1) Snap traps can be used to kill rodents in situations where poison baits cannot be used (such as around food) and where rodent infestations are not excessive. Effective trapping depends on putting the traps where rodents will contact them. The best locations are against walls, behind or under objects, and other places where rodents may hide. Based on the range of these rodents, rats traps should be placed about 15 to 30 feet (4.5 to 9 meters) apart.

(2) Meat baits, such as hot dogs or bacon, are effective for Norway rats, while nuts and dried fruits may be best for roof rats. Peanut butter, plain or mixed with grain (rolled oats), works well for house mice and all species in general. Testing a variety of baits can aid in determining bait preference and increasing trap success.

(3) Large numbers of traps placed in or near rodent runways, for a short period are more effective than a few traps over a longer time. Bait must be securely fastened to the trap trigger mechanism. Traps must be checked and reset daily.

f. Chemical Rodent Control. Chemical control is another method that can be used to control rodent infestations. The FSTs will not use chemicals in food areas for rodent control. Personnel with

specialized training must perform this work. Also, chemicals will not be stored near food. Instances have occurred where rodent control baits (rodenticides) were mistaken for food and were consumed by humans. Both single and multiple dose baits are available for use by the FSTs. Single dose baits remove dominant rats that prevent others from feeding at the bait station. They should be used initially for about 2 days, then switch to multiple dose baits for best overall control. Repeat this pattern weekly until control is achieved. Apply baits in locations out of reach of children, pets, domestic animals, and nontarget wildlife. Bait pellets must be placed in containers, NOT scattered over an area. These compounds are considered the safest rodenticides for general use. The action of multiple dose rodenticides is cumulative; rodents must feed on the anticoagulant-treated bait for several days with not more than 48 hours between feedings. Adequate supplies of toxic bait must be kept available until control is achieved. Notify PVNTMED personnel if rodents are not accepting the bait.

g. Rodent Bait Stations. Proper placement of bait is very important. Place bait in rodent travel ways or near their burrows and harborage; the best of these locations is in the rodents' normal line of travel. Baits should be placed in containers. Such containers should be placed next to walls or in places where the rodents will intercept them. Some bait boxes may be large enough so that both water and dry baits can be placed inside. They may be constructed of wood, plastic, or metal. The containers should be made tamperproof to prevent people and other animals from tipping them over and spilling the bait. If properly placed, bait containers provide a secure place for rodents to feed. All bait station containers must be labeled with the statement, **CAUTION! POISON**. A field expedient method for using bait pellets is to place the right amount in small paper packets (rodents can easily smell and chew through the paper) to keep the bait from being spread over a large area and to make application easier. Make and use these packets only when bait stations are not available, where children and nontarget animals will not get them, and where they will not be exposed to precipitation or runoff.

(1) Bait stations must be labeled with the statement, **CAUTION! POISON**.

(2) Label must be in both English and the local language.

h. Disposal of Dead Rodents. All traps and bait stations must be checked early each morning for dead rodents. The following self-protective measures are essential in disposing of the dead rodents:

(1) Spread the extended duration DEET insect repellent on your hands and sleeves. Next, apply DEET to the front of your clothing to repel any fleas or other pests which may transmit disease which may attempt to leave the rodent as they are removed from the traps or stations. Do not assume that all pests have already left the rodents.

(2) Using a shovel, or long-handled tongs and rubber gloves, pick up the dead rodents from the traps and place them in double plastic bags or a metal container that has a tightly fitted lid.

(3) Dispose of dead rodents according to local regulations or the unit SOP.

(4) Contaminated/dirty snap traps must be sanitized in a 5% hypochlorite solution (household bleach strength) prior to reuse to reduce the chances of spreading rodentborne diseases. (See Table 2-3 for preparation of hypochlorite solution.)

Table 2-3. Preparation of Hypochlorite Solution

HTH GRANULES OUNCES	HTH GRANULES MRE SPOONFULS	HOUSEHOLD BLEACH
48	40	FULL STRENGTH

Section VIII. HEAT INJURIES

2-41. General

a. The Human Body. The human body temperature is regulated within extremely narrow limits, although there may be marked variations in the environmental temperature. Exposure to a high environmental temperature produces stress on the body that may lead to a heat injury. The conditions which influence the heat equilibrium of the body and its adjustments are the air temperature; the temperature of surrounding objects; the sun's radiant heat; the vapor pressure of the water in the air (relative humidity); the air movement; and the amount and type of clothing worn. Another important factor that influences the heat equilibrium is the metabolic heat produced by the body because of physical activity.

b. The Environmental Factors that Affect Body Heat Loss.

(1) The rate and direction of heat flow from (or to) the body depends on the *temperature* of the environment. When the environmental temperature is much below body temperature, the rate of heat loss is large. This rate falls as the environmental temperature reaches body temperature and stops when these temperatures are equal. As the environmental temperature rises above body temperature, the only way for the body to lose heat is by sweating.

(2) The *wind* is another important environmental factor in heat regulation. As the wind rate increases, the warm air cooled by the body through conduction is blown away and replaced by additional warm air that increases body heat. If the air is warmer than the skin, it may still help cool the body by evaporating sweat. Of course, with a high wind rate, mechanical forces (windburn) which will decrease body heat loss may injure the skin.

(3) Air *humidity* is yet another important heat loss factor. The air, at any given temperature, can hold only a certain amount of water vapor. As the environmental humidity (the measurement of how much water vapor there is in the air) rises, smaller amounts of sweat can evaporate, and heat loss by evaporation slows. This is the main difference between the heat of the desert (low humidity) and the jungle (high humidity). Because of the limitation of evaporation, heat injuries occur at lower environmental temperatures in the jungle or in any area where the humidity is high. For sweating to be effective, it must evaporate from the skin surface. Sweat that drips or is wiped off does not aid in body heat loss.

(4) *Radiant energy* is also an important environmental factor. If objects, such as tanks, surrounding a human body are hotter than the body, they will radiate heat to the body. In warm weather, and especially outdoors in the sun, the radiant heat load is high, and the body cannot lose heat by radiation. Shade and light colored clothing block absorption of the radiant energy of the sun by the body.

2-42. Predisposing Factors Leading to Heat Injury

a. Several human factors come into play, which increase the heat load on the body and make the likelihood of injury more prevalent. Individuals who are not acclimatized are much more likely to be injured. Recruits are particularly vulnerable to heat injury. The individual who has been living in a cool climate does not handle heat stress well. In fact, a person who is acclimatized to heat and who moves to a cool area for 1 month loses most of his acclimatization to heat.

b. Overweight and fatigue impair the body's heat-losing mechanisms. It takes work on the part of the body to lose heat, and an already tired body cannot perform this function well.

c. Heavy meals and hot foods and drinks (coffee and tea) add heat to the body and put unnecessary stress on the body. Hot meals add heat which must be eliminated. Heavy meals direct blood flow to the digestive tract.

d. Use of alcoholic beverages, especially amounts resulting in hangovers, will decrease the ability of the body to deal effectively with heat stress.

e. Fever increases the amount of heat to be dissipated by the body. Fever is usually the result of disease processes, but can also be induced by man. Many of the immunizations that are administered produce fevers.

f. Drugs that inhibit sweating, such as atropine, antihistamines, some tranquilizers, cold medicines, and some antidiarrheal medications, markedly impair heat loss when temperatures are high.

g. Tight clothing is detrimental to heat loss from the body. Clothing should be loose so as not to restrict circulation or impede movement of air over the skin.

2-43. Types of Heat Injury

Three distinct clinical syndromes of heat injury may occur, depending on the manner of breakdown in the individual's heat adjustment. These syndromes are heat cramps, heat exhaustion, and heatstroke. The three conditions produce distinctive signs and symptoms, which should be recognized at once not only by the medical officer, but also by other soldiers and small unit leaders if the casualty is to receive proper care and attention. All military personnel must be familiar with the preventive measures for these conditions.

a. Heat Cramps. Painful cramps of the voluntary muscles may occur following exposure to heat. Heat cramps result primarily from excessive loss of salt from the body. The muscles of the extremities and of the abdominal wall are usually involved and the cramps may be of great severity. Heat cramps can occur

alone or in the presence of heat exhaustion. Body temperature is normal unless heat cramps are accompanied by heat exhaustion.

b. Heat Exhaustion. Heat exhaustion occurs as the result of peripheral vascular collapse due to excessive salt depletion and dehydration. This syndrome is characterized by profuse sweating, headache, tingling sensations in the extremities, pale face, shortness of breath, palpitations, loss of appetite, and occasionally, nausea and vomiting. Neuromuscular disturbances with trembling, weakness, and lack of coordination coupled with cerebral signs ranging from slight clouding of the sensorium to momentary loss of consciousness complete the classical picture. The skin is cool and moist. The pulse rate is rapid (120 to 200 beats per minute), and the blood pressure may be low. The oral temperature may be subnormal (as in cases where hyperventilation is present) or slightly elevated, but the rectal temperature is usually elevated.

c. Heatstroke. **HEATSTROKE IS A MEDICAL EMERGENCY**, with a high death rate. Whereas heat exhaustion may be regarded as the result of overactive heat-balance mechanisms that are still functioning, heatstroke results when thermos-regulatory mechanisms are not functional and the main avenue of heat loss (cooling by evaporation of sweat) is blocked. There may be early signs such as headache, dizziness, delirium, weakness, nausea, vomiting, and excessive warmth; however, sweating may or may not be absent. Although the casualty may first progress through the symptoms of heat cramps or heat exhaustion, the onset of heatstroke may occur with dramatic suddenness with collapse and loss of consciousness. Profound coma is usually present and convulsions may occur. In the early stage, the casualty's skin is usually hot, red, and dry. The presence of sweating does not exclude this diagnosis. The best sign of this injury is a high body temperature, more than 106°F (41°C). A rectal temperature exceeding 108°F (42°C) is not uncommon and indicates a poor prognosis. The casualty's condition deteriorates rapidly; therefore, treatment must begin immediately. One attack of heatstroke predisposes to a second attack; care should be taken by the individual to avoid a second exposure to the precipitating condition. An alternative view is that the individual is a member of a susceptible population and remains susceptible.

2-44. Prevention of Heat Injuries

Successful prevention of the adverse effects of heat depends largely on education of personnel, including personnel exposed to heat, especially those charged with the supervision of such personnel. Specifically, prevention of heat injury involves the development of procedures to alert individuals to the existence of dangerous heat stress levels, the application of measures to reduce both the severity and duration of exposure, and adoption of techniques to increase the resistance of exposed persons. Resistance is increased by the gradual acclimatization of individuals to hot environments, or at least the graduated introduction of the required work level in a hot environment; by replenishing water and salt losses from the body as they occur; and by the maintenance of the optimum physical condition of personnel. Heat stress is decreased by reducing the workload and by introducing any measure that will protect the individual from the hot environment.

a. Water.

(1) The human body is highly dependent on water to cool itself in a hot environment. By sweating, an individual may lose more than 1 quart of water per hour. These losses must be replaced or a rapid decrease in the ability to work, a rise in body temperature and heart rate, deterioration of morale, and a

heat injury may occur. Water loss should be replaced by frequent intake of small amounts of water throughout the work period. Personnel must be encouraged to drink water and be given time to do so, since normal thirst does not serve as a true indication of the body's need for water. Table 2-4 may be used as a guide to estimate the drinking water requirements for personnel exposed to heat. This table should be used for planning and procurement purposes only and should not be used as a yardstick for water intake of any individual.

Table 2-4. Heat Injury Prevention

Heat Category	WBGT Index, °F	Easy Work		Moderate Work		Hard Work	
		Work/ Rest	Water Intake, Qt/hr	Work/ Rest	Water Intake, Qt/hr	Work/ Rest	Water Intake, Qt/hr
1	78-81.9	NL	½	NL	¾	40/20 min	¾
2 (Green)	82-84.9	NL	½	50/10 min	¾	30/30 min	1
3 (Yellow)	85-87.9	NL	¾	40/20 min	¾	30/30 min	1
4 (Red)	88-89.9	NL	¾	30/30 min	¾	20/40 min	1
5 (Black)	> 90	50/10 min	1	20/40 min	1	10/50 min	1

- The work/rest times and fluid replacement volumes will sustain performance and hydration for at least 4hr of work in the specified heat category. Individual water needs will vary ± ¼ qt/hr.
- NL= no limit to work time per hour.
- Rest means minimal physical activity (sitting or standing), accomplished in shade if possible.
- **CAUTION:** Hourly fluid intake should not exceed 1½ quarts.
- Daily fluid intake **should not exceed 12 quarts.**
- Wearing body armor add **5°F** to WBGT Index.
- Wearing MOPP overgarment add **10°F** to WBGT Index.

Easy Work	Moderate Work	Hard Work
• Weapon Maintenance • Walking Hard Surface at 2.5 mph, ≤ 30 lb Load • Manual of Arms • Marksmanship Training • Drill and Ceremony	• Walking Loose Sand at 2.5 mph, no Load • Walking Hard Surface at 3.5 mph, ≤ 40 lb Load • Calisthenics • Patrolling • Individual Movement Techniques, i.e. low crawl, high crawl • Defensive Position Construction • Field Assaults	• Walking Hard Surface at 3.5 mph, ≥ 40 lb Load • Walking Loose Sand at 2.5 mph with Load

(2) During periods of moderate activity, with moderate conditions prevailing, water requirements will be 1 pint or more per hour per man. This is best taken at 20- to 30-minute intervals. As activities or conditions become more severe the intake increases accordingly. When water is in short supply, significant water economy may be achieved by limiting physical activity to the early morning, late evening, and night hours when the heat load is less and sweating is reduced. The optimum temperature of drinking water is between 60° and 70°F.

(3) The belief that men can be taught (toughened up) to adjust to decreased water intake is incorrect. Man cannot live or work in heat without sufficient water.

b. Salt.

(1) In addition to water, sodium chloride is lost in the sweat. The military diet usually provides adequate salt.

(2) A convenient method of providing adequate salt intake is to encourage the addition of salt to food at mealtime. This, along with salt in cooking and in bread, will meet most requirements. Excess intake of salt should be avoided; it may cause increased thirst and intestinal disturbances.

CAUTION

Due to the high salt concentration in field rations, caution must be taken to maintain a high water intake.

c. Acclimatization.

(1) Training programs for personnel who are climatically and/or physically unseasoned to heat should be limited in intensity and time. A period of approximately 2 weeks should be allowed for acclimatization with progressive degrees of heat exposure and physical exertion. If personnel are required to perform heavy physical work before being acclimatized, the work is poorly performed; development of the capacity to effective work is retarded; and the risk of heat injury and disability is high. A period of acclimatization (10 to 14 days) is necessary regardless of the individual's physical condition, although the better the physical condition, the quicker acclimatization is completed.

(2) Acclimatization to heat begins with the first exposure and is usually well developed by the end of the first week. Individuals who are unusually susceptible to heat will require additional time for acclimatization. Full acclimatization (the ability to perform a maximum amount of strenuous work in the heat) is attained more quickly by gradually increasing work in the heat. Resting for 3 or 4 days in the heat, with activity limited to that required for existence, results in only partial acclimatization. Physical work in the heat must be accomplished for development of full acclimatization to that work level in a given hot

environment. A day or two of intervening cool weather will not interfere significantly with acclimatization to a hot environment.

(3) A schedule should be established which provides for alternating work and rest periods. Although advantage should be taken of the cooler hours in accomplishing a portion of the work, the schedule should include gradually increasing exposure during the hotter parts of the day rather than complete exclusion of work at that time. Table 2-4 provides work/rest cycles. These cycles may be modified to be consistent with local conditions. The work period should be divided so that a man works and rests in alternating periods. When necessary to accomplish a given task, two details can be arranged to work in sequence. The schedule is based on work equal to that of marching with a 20-pound pack at the rate of 2.5 miles per hour. Lighter work may be carried out for longer periods of time and heavier work for shorter periods. During the midday period, personnel should rest and keep in the shade as much as possible. Peak wet bulb globe temperature (WBGT) conditions usually occur between 1200 and 1600 hours. Local and regional variations may warrant modifications of the above schedule. Acclimatization schedules for unseasoned individuals should be scaled down to their tolerance.

(4) Adequate water must be provided at all times. Personnel cannot learn to do without water.

(5) Once acclimatized, the soldier will retain his adaptation for 1 week after leaving the hot environment, but if not exposed to work in high temperatures, the acclimatization will then decrease at a variable rate, the major portion being lost within 1 month.

(6) Acclimatization to a hot, dry (desert) environment markedly increases the ability to work in a hot, moist (jungle) environment; however, for proper acclimatization to the latter, residence in such an area with regulated physical activity is required. Whereas carefully and fully developed acclimatization increases resistance, it does not provide complete protection against ill effects of heat, especially moist heat.

(7) Under conditions of heat stress, meals should be cool rather than hot. The heaviest meal should be served in the evening rather than at noon. An hour of rest following the noon meal is beneficial.

NOTE

This does not relieve units from the responsibility of maintaining proper food service time-temperature requirements for potentially hazardous foods.

d. Physical Condition. The general physical condition of the individual has a significant bearing on the individual's reaction to heat stress. A large number and a variety of conditions may enhance individual susceptibility to heat. Among these are infections, fevers, immunization reactions, heat rash, sunburn, fatigue, overweight, and a previous case of heatstroke. The risk of heat injury is much higher in overweight, unfit persons than in those of normal weight. Special care should be exercised when such

persons are exposed to high temperatures. An individual once affected should, therefore, be exposed to heat stress with caution. Predisposition is not developed in the case of heat exhaustion and heat cramps.

e. Work Schedules. Work schedules must be tailored to fit the climate, the physical condition of personnel, and the military situation. Close supervision by medical personnel and commanders is essential in achieving maximum work output with minimum hazard. Several principles must be considered:

(1) The amount of heat produced by the body increases directly with increasing work; therefore, reduction of workload markedly decreases the total heat stress.

(2) Workloads and/or duration of physical exertion should be less during the first days of exposure to heat and should be gradually increased to allow for acclimatization.

(3) Decisions to modify work schedules must be governed by the local situation; heavy work should be scheduled for the cooler hours of the day such as early morning or late evening.

(4) Alternate work and rest periods may prove desirable. Under moderately hot conditions, 5-minute rest periods in the shade, alternating with 25 minutes of work in the sun may be desirable. Under severe conditions, the duration of rest periods should be increased.

(5) Exposure to high temperature at night, as well as in the daytime, will decrease the amount of work that can be performed effectively.

(6) Workloads must be reduced at high temperatures when dehydration resulting from excess sweating and lack of water replacement occurs. When water is in short supply, working in the early morning and late evenings will allow for the accomplishment of much more work for the expenditure of a given amount of water than working during the hottest hours of the day.

(7) Work in the direct sun should be avoided as much as possible on hot days.

(8) Unnecessary standing at attention in the heat should be avoided because continued standing places an added burden on the body's circulatory system.

(9) When the temperature is very high, physical work should be curtailed or, under extremely severe conditions, even suspended. The temperature at which work should be curtailed or suspended depends on the humidity, heat radiation, air movement, character of the work, degree of acclimatization of personnel, and other factors. Heat casualties may be expected at WBGT indices of 75°F (23.9°C) and above unless PMM are instituted. Overexertion can cause heat injury at even lower temperatures, especially if body armor or vapor impermeable protective clothing is worn.

f. Protection from the Environment. Except when exposed to the sun's rays, an individual in a hot environment is better off wearing the least allowable amount of clothing. Clothing reduces the exposure of the body surface to solar radiation, but at the same time decreases the movement of air over the skin. To

take full advantage of its benefits and minimize its disadvantages, clothing should be loose fitting especially at the neck, wrists, waist, and lower legs to allow air circulation. Protection from the environment also includes such simple but frequently overlooked things as marching troops over grass rather than concrete and operating in the shade, if available.

g. Education. Prevention of heat casualties depends largely on the education of personnel exposed and especially upon supervision by informed leaders. Every individual exposed to high temperatures should be informed of the potentially serious results of heat injury, the general nature of these conditions, and how they can be prevented. Supervisors must be able to identify environmental conditions under which adverse heat effects are likely to occur. They should recognize the earliest signs of heat injury and take action to prevent the development of cases. All personnel should be able to apply effective first aid. Mental confusion and overactivity usually precede collapse from heatstroke. Supervisors must be alert to detect this condition, enforce rest, and obtain medical assistance promptly. Medical personnel should assist commanders in the development of local programs for heat injury prevention.

h. Wet Bulb Globe Temperature Index. The WBGT index serves as a guideline for making recommendations to the commander when hot weather conditions are hazardous for the soldiers. With this information, decisions can be made regarding soldier activity in hot weather. The WBGT index can be obtained from PVNTMED or the military meteorological service. It is the unit's responsibility to monitor the WBGT and determine the heat category. If the unit does not have the WBGT, it can be obtained from PVNTMED personnel. The heat index will establish the work/rest cycles and the amount of water consumption to minimize heat injuries.

2-45. Use of the Wet Bulb Globe Temperature Index in the Control of Physical Activity

It should be emphasized that the measurements must be taken in a location that is the same as, or closely approximates, the environment to which personnel are exposed.

a. When the WBGT index reaches 82°F (27.77°C), discretion should be used in planning heavy exercise for unseasoned personnel.

b. When the WBGT reaches 85°F (29.4°C), strenuous exercises, such as marching at a standard cadence, should be suspended for unseasoned personnel during their first 2 weeks of training. At this temperature, training activities may be continued on a reduced scale after the second week of training.

c. Outdoor classes in the sun should be avoided when the WBGT exceeds 85°F (29.4°C).

d. When the WBGT reaches 88°F (31.1°C), strenuous exercise should be curtailed for all recruits and other trainees with less than 12 weeks training in hot weather. Acclimated soldiers, after having been acclimatized each season, can carry on limited activity at WBGT of 88° to 90°F (31.1° to 32.2°C) for periods not exceeding 6 hours a day.

e. When the WBGT index is 90°F (32.2°C) and above, physical training and strenuous exercise should be suspended for all personnel (excluding essential operational commitments not for training purposes, where the risk of heat casualties may be warranted).

f. Wearing body armor or mission-oriented protective posture adds 10°F to the measured WBGT. Limits should be adjusted appropriately.

Section IX. COLD INJURIES

2-46. General

Cold injury is defined as tissue injury produced by exposure to cold. The type of injury depends upon the degree of cold to which the body is exposed, the duration of the exposure, and the environmental factors responsible for injuring the body. (See FM 21-10.) Cold injury can occur at nonfreezing and at freezing temperatures. Pathologically, all cold injuries are similar. Nonfreezing cold injury is associated with exposure to water and cold. Chilblain, immersion foot, and trench foot are the three common terms applied to nonfreezing cold injury; a description of each appears below. However, these three terms apply to the same basic injury. The other injury, frostbite, is an injury caused by freezing cold. Hypothermia is a condition caused by prolonged cold exposure and body heat loss.

a. Chilblain results from intermittent exposure to temperatures above freezing, in high humidity.

b. Immersion foot results from prolonged exposure, usually more than 12 hours, in water at temperatures usually below 50°F (10°C). It is not limited to the feet, but may involve other areas of the body following immersion. Exposure for several days in water at 70°F in tropical latitudes has produced severe injury.

c. Trench foot results from prolonged exposure to cold—and usually wetness—at temperatures from just above freezing to 50°F (10°C). It is often associated with immobilization of the lower extremities. The average duration of exposure resulting in trench foot is 3 days.

d. Frostbite is produced by exposure at temperatures of freezing or below. Depending upon the air temperature, the time of exposure varies from a few minutes to several hours. High altitude frostbite results from exposure at high altitudes to temperatures varying from -20° to -80°F (-28.8° to -62.2°C). At these very low temperatures, severe injury may be instantaneous, especially to exposed parts such as fingers, ears, and the nose.

e. General hypothermia is an acute problem resulting from prolonged cold exposure and body heat loss. If an individual becomes fatigued during physical activity, he will be more prone to heat loss, and as exhaustion approaches, sudden blood vessel dilation occurs with resultant rapid loss of body heat.

2-47. Predisposing Factors

Cold injury, as it involves a military population, behaves in general according to accepted epidemiological principles. A specific agent is present and a variety of environmental and host factors influence the incidence, prevalence, type, and severity of the injury. Three main factors are involved in cold injury:

a. Agent Factors. Cold is the specific agent in cold injury and is the immediate cause of tissue damage without respect to the influence of modifying factors. If the effect of cold is considered in terms of body heat loss, the effect of moisture as a conductor of heat is readily apparent; also, the ways in which various host and environmental factors modify the extent and severity of cold injury become clear. Therefore, the effect of cold cannot be evaluated in direct relation to air temperature alone.

b. Environmental Factors.

(1) Weather is a predominant factor in cold injury. Temperature, humidity, precipitation, and wind modify the rate of body heat loss. Low temperatures and low relative humidity favor development of frostbite. Higher temperatures (just above freezing to 50°F [10°C]), together with moisture, are usually associated with trench foot. Wind velocity accelerates body heat loss under conditions of both coldness and wetness. The effect of low temperatures is intensified as air movement passing the body increases. This can be the result of wind against the body or the effect of a body moving rapidly through the air, such as in running, skiing, or riding in an open vehicle. The effects of wind speed on chilling the body are illustrated in Table 2-5.

(2) The incidence of cold injury varies greatly according to the type of combat action. Units in reserve or in rest areas have relatively few cases of cold injury. On holding missions or on static defense, exposure is greater and a moderate increase in incidence is expected. On active defense or offense, marked increases in cold injuries usually occur. Immobility under fire, prolonged exposure, lack of an opportunity to rewarm and change clothing or carry out personal hygienic measures, fatigue, and a lack of nutrition may be involved.

(3) Adequate clothing properly worn is essential to survival. Clothing for cold weather combat has been designed to be worn as an ensemble for protecting the head, torso, and extremities. Failure to wear the total ensemble and inadequate supplies of properly sized clothing are important factors leading to cold injury. The ensemble depends upon the layering principle to conserve body heat. Accordingly, loose layers of clothing with airspace between and under an outer wind- and water-resistant garment provide maximum protection. It is flexible because outer layers may be removed for comfort and efficiency to permit escape of perspiration in higher air temperatures or during strenuous physical exertion. Clothing wet by perspiration loses much of its insulating value. Therefore, care must be taken to prevent perspiration from accumulating in the clothing. In all forms of cold injury, preventing body heat loss by proper protection of the body is as important as wearing efficient head, hand, or footgear. All articles of clothing must be loose enough to avoid constriction.

c. Host Factors.

(1) *Age.* Within the usual age range of combat personnel, age is not significant.

(2) *Rank.* Trench foot and frostbite injuries are higher for soldiers who perform duties in environments with increased exposure to colder temperatures and moisture because they have greater exposure. The decreased incidence of cold injury among higher ranks is because of a combination of factors, such as experience, leadership, receptivity to training, and significantly less exposure.

(3) *Previous cold injury*. A previous episode of trench foot, frostbite, or immersion foot greatly increases the individual's risk of another cold injury to the same area.

Table 2-5. Windchill Chart

ESTIMATED WIND SPEED (IN MPH)	ACTUAL TEMPERATURE READING (°F)											
	50	40	30	20	10	0	-10	-20	-30	-40	-50	-60
	EQUIVALENT CHILL TEMPERATURE (°F)											
CALM	50	40	30	20	10	0	-10	-20	-30	-40	-50	-60
5	48	37	27	16	6	-5	-15	-26	-36	-47	-57	-68
10	40	28	16	4	-9	-24	-33	-46	-58	-70	-83	-95
15	36	22	9	-5	-18	-32	-45	-58	-72	-85	-99	-112
20	32	18	4	-10	-25	-39	-53	-67	-82	-96	-110	-121
25	30	16	0	-15	-29	-44	-59	-74	-88	-104	-118	-133
30	28	13	-2	-18	-33	-48	-63	-79	-94	-109	-125	-140
35	27	11	-4	-20	-35	-51	-67	-82	-98	-113	-129	-145
40	26	10	-6	-21	-37	-53	-69	-85	-100	-116	-132	-148

(WIND SPEEDS GREATER THAN 40 MPH HAVE LITTLE ADDITIONAL EFFECT.)

LITTLE DANGER IN LESS THAN ONE HOUR WITH DRY SKIN. MAXIMUM DANGER OF FALSE SENSE OF SECURITY.

INCREASING DANGER DANGER FROM FREEZING OF EXPOSED FLESH WITHIN ONE MINUTE.

GREAT DANGER FLESH MAY FREEZE WITHIN 30 SECONDS.

NOTE: 1. TRENCH FOOT AND IMMERSION FOOT MAY OCCUR AT ANY POINT ON THIS CHART.
2. F = 9/5 C + 32.

(4) *Fatigue*. Fatigue contributes to cold injury because as personnel become exhausted they fail to carry out simple preventive measures. This occurs more frequently in personnel who have been in combat for 30 days or more without rest. Mental weariness may cause apathy leading to the neglect of needs vital to survival. Frequent rotation of troops from the front lines for even short periods lessens the effects of fatigue.

(5) *Discipline, training, and experience*. Individual and unit discipline, training, and experience are closely related as they influence the incidence of cold injury. Well-trained and well-disciplined

men profit from combat experience in the cold. They are better able to care for themselves through personal hygiene, care of the feet, change of clothing, exercise of the extremities in pinned-down positions, and similar simple, but effective measures. Preventive measures necessary for survival in the cold must be continuously stressed to the troops, enabling them to cope with these problems.

(6) *Psychosocial factors*. Cold injury tends to occur in passive, negativistic, or hypochondriacal individuals, who display little muscular activity and who are prone to pay less attention to carrying extra footwear; changing socks when needed; and reducing smoking under combat conditions where cold injury is a threat.

(7) *Race*. In terms of numbers at risk and independent of geographic origin, some racial groups appear to be more vulnerable to frostbite than are others.

(8) *Geographic origin*. The geographic origin of the individual seems to be a significant factor among Caucasians in the incidence of cold injury. Origin from warmer climates of the United States (including Puerto Rico) where the mean minimum January temperature is above 20°F (-6.6°C) predisposes cold injury.

(9) *Nutrition*. Poor nutrition contributes to susceptibility to cold injury. Adequately clothed and protected personnel living and working in cold climates do not require an increase in caloric intake above that normally provided in the military ration. Individuals who do not eat regularly or do not eat complete, balanced meals are more susceptible to injury.

(10) *Activity*. Too much or too little activity can contribute to cold injury. Overactivity with rapid and deep breathing can cause the loss of large amounts of body heat. Perspiration trapped in clothing markedly reduces the insulating quality of the clothing. On the other hand, immobility causes decreased heat production with the danger of resultant cooling, especially of extremities.

(11) *Drugs and medications*. Personnel should be made aware of the effects of smoking in decreasing peripheral circulation and of alcohol ingestion in dilating peripheral vessels. Persons on peripheral vasodilator medications may be at added risk of cold injury due to reduced circulation. Both tobacco and alcohol should be avoided when the danger of cold injury exists.

2-48. Prevention of Cold Injuries

a. General. Cold injuries are preventable except in unusual situations. Successful prevention requires vigorous command emphasis; prior planning in such activities as cold-weather training; and the provision of cold-weather clothing and equipment. Specific preventive measures are directed toward conserving body heat and avoiding unnecessary exposure of personnel to cold, moisture, and activities or factors favoring cold injury.

b. Meteorological Data. All commanders must be familiar with the use of meteorological data such as humidity, temperature, wind, and ground surface conditions that influence the risk of cold injury. The windchill chart (Table 2-5) can help the soldier and his commander judge the severity of the

environment. Some weather conditions require shortening the exposure time of individuals engaged in patrols, guards, or motor movements in unheated vehicles despite the adequacy of their clothing and equipment. These can frequently be anticipated by using meteorological data and existing weather conditions to predict the hazard for the next 12-hour period.

c. Cold Injury Control. Each platoon or comparable-sized unit should appoint someone in the unit to monitor factors for cold injury. This individual may be an officer or noncommissioned officer (frequently, the FST member), who is selected on the basis of leadership, interest, and ability to supervise others in simple but constant preventive activities. He should frequently check clothing supplies; inspect personnel daily for personal hygiene and care of their feet, as well as early signs and symptoms of cold injury, and ensure that socks are changed at appropriate intervals and that all reasonable efforts are made to keep the feet clean and dry; encourage efforts to exercise even if only their extremities; and ensure that constriction of extremities by clothing, equipment, and footgear is avoided.

d. The Buddy System. Personnel should be taught to observe their buddy for evidence of cold injury. If blanching of the skin is noted, immediate care will usually prevent the development of cold injury. Holding (not rubbing) a warm hand on the blanched area until it returns to normal color will rewarm a buddy's ear, nose, or cheek. Fingers can be warmed against the skin of the abdomen or in the armpit. Toes can be rewarmed by holding them against a buddy's bare chest or abdomen, care being taken to provide protection from the wind. A symptom of incipient frostbite on fingers and toes is the sudden and complete cessation of the sensation of cold or discomfort in the part. This is often followed by a pleasant feeling of warmth. If these danger signals are instantly heeded, cold injury can be prevented.

e. Personal Measures.

(1) Wear or carry adequate clothing for the weather to be encountered. Remove excess layers of clothing before perspiration starts so that clothing does not become wet. Avoid getting clothing or footgear wet, since moisture causes loss of insulating quality.

(2) Wear clothing and footgear in loose layers to permit layers of air to provide good insulation and to permit good circulation of blood to all parts of the body. Tailored, tight-fitting uniforms are dangerous in cold climates.

(3) Keep hands well protected; mittens are more protective than gloves. Avoid lengthy exposure of bare hands and wrists that will cause stiffening and reduce circulation, since it takes a long time to recondition the hands to normal use. Do not touch metal, snow, or other objects with bare hands.

(4) Avoid immobilization in the cold. If the situation permits, walk about and exercise periodically to generate and maintain body heat. If unable to walk about, shift positions frequently, especially move the toes, feet, legs, fingers, and arms. Sit or stand on insulating material such as wood, cardboard, or other poor cold conductors rather than on cold or wet ground or snow.

(5) Remove excess clothing when near a fire or in a warm enclosure; otherwise, the body adjusts to the warm temperature and excess clothing. Upon returning to the cold air, the body will adjust

more slowly to the cold and excessive amounts of body heat will be lost. The result will be the loss of more heat than the body gained during warming, with an increased susceptibility to cold injury.

f. Clothing. The Extended Cold Weather Clothing System (ECWCS) will provide protection of the head, torso, and extremities from 40° to -60°F (4.4° to -51.1°C). The ensemble uses the layering principal to conserve body heat. Loose layers of clothing with air space between them, under an outer wind- and water-resistant garment, provide maximum protection. The ensemble is generally comprised of four layers:

- Polypropylene undershirt/drawers.
- Fiber pile shirt/pants.
- Polyester batting coat and trouser liner.
- Extended cold weather (GORE-TEX®) camouflage parka and trousers.

See Table 2-6 for further information on suggested clothing layering for physical training and work.

(1) A standard number of layers of clothing cannot be prescribed for universal wear during winter months. Flexibility must be provided for local conditions. Some basic principles are important, including ventilating the body during physical activity, the cleanliness and repair of clothing to prevent loss of insulation, and the avoidance of constriction produced by snug-fitting socks, boots, underwear, sweaters, jackets, and trousers.

(2) Ground forces personnel in cold areas should be equipped with insulated rubber combat boots. Frequent changes of socks is important with these boots because of increased sweating, retention of sweat, and a lowered resistance to fungal infections. Although sweating in these boots does not contribute to the loss of insulation, it does lead to softening the soles of the feet by the retained sweat. Trauma to macerated tissues, produced by walking, results in a loss of skin from the soles of the feet which may require hospitalization. Cold injuries to the feet have been reported when wearing the insulated boot. These injuries usually result from inactivity and dependency of the feet, which can occur with prolonged sitting or standing without foot or leg movement. Periodic exercise, plus good foot hygiene and dry socks, will help prevent such injuries. The insulated boot should be inspected periodically for punctures. A hole in the boot renders it ineffective and may cause cold injuries.

(3) In all types of footwear, feet perspire more and are less ventilated than other parts of the body, so that moisture accumulates in socks, decreasing their insulating quality. Because of this and the fact that the feet are susceptible to cold injury and less frequently observed than the remainder of the body, special foot and sock care is essential. Extra socks should be carried by all personnel. Socks damp from perspiration will dry if carried unfolded inside the shirt; they should be changed daily and washed whenever the opportunity permits. Socks and other clothing soiled with dirt, grease, or mineral salts from perspiration will conduct heat more rapidly, thus affording less protection against the cold.

g. Unusually Susceptible Groups. Individuals with host factors listed in paragraph 2-47*c* require greater protection and supervision of preventive measures in order to prevent cold injury.

Table 2-6. Leader's Guide For the Prevention of Cold Injuries Due to Exposure to Temperatures Below 50°F

INFORMATION IS PROVIDED TO ASSIST LEADERS IN RISK DECISION-MAKING AND CONTROL DEVELOPMENT AS PART OF THE RISK MANAGEMENT PROCESS. RISK DECISIONS AND CONTROLS ARE IMPLEMENTED INTO UNIT TRAINING PLANS AND THAT TRAINING IS SUPERVISED. THESE GUIDELINES ARE GENERALIZED FOR WORLDWIDE USE. COMMANDERS OF UNITS WITH EXTENSIVE EXTREME COLD WEATHER TRAINING AND SPECIALIZED EQUIPMENT MAY OPT TO USE LESS CONSERVATIVE GUIDELINES.

WORK INTENSITY	LITTLE DANGER	INCREASED DANGER	GREAT DANGER
HIGH DIGGING FOXHOLE, RUNNING, MARCHING WITH RUCKSACK, MAKING OR BREAKING BIVOUAC.	INCREASED SURVEILLANCE; BY SMALL UNIT LEADERS; BLACK GLOVES OPTIONAL-MANDATORY BELOW 0° F; INCREASED HYDRATION.	EXTENDED COLD WEATHER CLOTHING SYSTEM OR EQUIVALENT; MITTENS WITH LINERS; NO FACIAL CAMOUFLAGE; EXPOSED SKIN COVERED AND KEPT DRY; REST IN WARM, SHELTERED AREA; VAPOR BARRIER BOOTS BELOW 0° F.	POSTPONE NON-ESSENTIALTRAINING; ESSENTIAL TASKS ONLY WITH LESS THAN 15-MINUTE EXPOSURE; WORK GROUPS OF NO LESS THAN 2 PERSONNEL; COVER ALL EXPOSED SKIN.
LOW WALKING, MARCHING WITHOUT RUCKSACK, DRILL AND CEREMONY.	INCREASED SURVEILLANCE; COVER EXPOSED FLESH WHEN POSSIBLE; MITTENS WITH LINER AND NO FACIAL CAMOUFLAGE BELOW 10° F; FULL HEAD COVER BELOW 0° F. KEEP SKIN DRY-ESPECIALLY AROUND NOSE AND MOUTH.	RESTRICT NONESSENTIAL TRAINING; 30- TO 40-MINUTE WORK CYCLES WITH FREQUENT SUPERVISORY SURVEILLANCE FOR ESSENTIAL TASKS. SEE ABOVE.	CANCEL OUTDOOR TRAINING.
SEDENTARY SENTRY DUTY, EATING, RESTING, SLEEPING, CLERICAL WORK.	SEE ABOVE; FULL HEAD COVER AND NO FACIAL CAMOUFLAGE BELOW 10° F COLD-WEATHER BOOTS BELOW 0° F; SHORTEN DUTY CYCLES; PROVIDE WARMING FACILITIES.	POSTPONE NONESSENTIAL TRAINING; 15- TO 20-MINUTE WORK CYCLES FOR ESSENTIAL TASKS; WORK GROUPS OF NO LESS THAN 2 PERSONNEL; NO EXPOSED SKIN.	CANCEL OUTDOOR TRAINING.
RECOMMENDED CLOTHING			
FIELD UNIFORM	POLYPRO (T/B); ECWCS (T/B); BALACLAVA TRIGGER FINGER MITTENS; GORE-TEX® BOOTS	POLYPRO (T/B); FIBER PILE (T/B); ECWCS (T/B); BALACLAVA/PILE CAP; ECW MITTENS; BOOTS ECW	POLYPRO (T/B); FIBER PILE; POLYESTER BATTING COAT AND TROUSER LINER; ECWCS (T/B); BALACLAVA/PILECAP BOOTS ECW (TYPE II)
PT UNIFORM	PFU; SWEATS (T/B); NECK GATOR; BLACK KNIT CAP; BLACK GLOVES W/INSERTS	PFU; SWEATS (T/B); POLYPRO (T/B); BLACK KNIT CAP; NECK GATOR; BALACLAVA; TRIGGER FINGER MITTENS	PFU; SWEATS (T/B) POLYPRO (T/B); BLACK KNIT CAP; NECK GATOR; BALACLAVA; TRIGGER FINGER MITTENS

GORE-TEX® Boots—Matterhorn/Rocky Mountain or similar GORE-TEX® insulated leather boots. ECWCS—Extended Cold Weather Clothing System (GORE-TEX®); T/B—Top and Bottom; PFU—physical fitness uniform.

Section X. TOXIC INDUSTRIAL CHEMICAL HAZARDS

2-49. General

Occupational hazards may be classified as chemical, physical, or biological. Chemicals are found in many areas where toxic industrial materials (TIM) are produced, used, and stored, or may appear as by-products or impurities in otherwise safe substances. These chemicals may produce injury or death in all situations including combat. The loss of key personnel during combat may have a serious impact upon a unit's ability to accomplish its mission. This nonbattle injury and death is preventable.

2-50. Routes of Entry

Toxic industrial chemicals can enter the body by various routes. The body's response to any TIC may vary markedly depending on the specific route of entry.

a. Inhalation. Inhalation is the most important route of entry. Some toxic chemicals may produce acute effects that are quickly recognized by the exposed person. Other chemicals may cause chronic effects that take many years to develop, such as asbestosis from asbestos exposure.

b. Absorption. The most common occupational disease seen is dermatitis. Contact dermatitis may be caused by irritation or allergic sensitization. Systemic poisoning can also result from skin absorption.

c. Ingestion. Ingestion occurs as a result of eating or smoking with contaminated hands, contaminated utensils, or in contaminated areas.

d. Injection. Accidental injection may occur from the use of high-pressure air or from liquid lines rupturing, or from puncture wounds caused by contaminated objects.

2-51. Toxic Industrial Chemical Classifications

Toxic industrial chemicals are classified according to their physical state or chemical characteristics. Classification is important in determining the route of exposure.

a. Gas. A state of matter in which material has a very low density and viscosity can expand and contract greatly in response to changes in temperature and pressure; is easily diffused into other gasses; and is readily and uniformly distributed throughout any container. A gas can be changed to a liquid or a solid state only by the combined effect of increased pressure and decreased temperature.

b. Liquid. A state of matter in which the substance is a free-flowing, formless fluid. A liquid takes many forms depending on environmental conditions.

(1) *Vapor*. The gaseous form of substances which are normally in a solid or liquid state at normal room temperature and pressure.

(2) *Mist*. Suspended liquid droplets generated by condensation from the gaseous to the liquid state or by a liquid breaking up into a dispersed state by splashing, foaming or atomizing.

c. Solids.

(1) *Fume*. Airborne dispersion consisting of minute solid particles arising from heating a solid such as lead. This physical change is often accompanied by a chemical reaction, such as oxidation. Fumes flocculate and sometimes coalesce.

(2) *Dust*. Solid particles generated by handling, crushing, grinding, impacting, detonating, and decrepitating materials. Dust does not tend to flocculate, except under electrostatic forces. These particles do not tend to diffuse in the air, but settle under the influence of gravity.

CAUTION

Failure to carefully check MSDS or labels for danger when using chemicals may cause injury to unit personnel.

2-52. Chemical Actions and Effects

A detailed discussion of all biological actions of all the chemicals that you may encounter is impossible. Instead, chemicals will be discussed according to their general biological actions. Check MSDS or labels for dangers associated with chemicals.

a. Irritants. These materials cause inflammation of mucous membranes with which they come in contact. Many irritants are strong acids or alkalis that are corrosive to nonliving things; however, they cause inflammation to living tissue. Examples are sulfur dioxide, acetic acid, formaldehyde, formic acid, sulfuric acid, iodine, ozone, and oxides of nitrogen.

b. Asphyxiants. Asphyxiants are materials that deprive the respiratory tissues of oxygen; they do not damage the lungs. Simple asphyxiants are gases, which when present in sufficient quantities, exclude an adequate oxygen supply. Examples are nitrogen, nitrous oxide, carbon dioxide, hydrogen, helium, methane, and ethane. Chemical asphyxiants are materials which have the ability to render the body incapable of using an adequate oxygen supply. Two classic examples are carbon monoxide and cyanide.

c. Anesthetics. The main toxic action of these materials is their depressant effect upon the central nervous system, particularly the brain. The degree of anesthetic effect depends upon the effective concentration in the brain as well as upon the specific makeup of the contaminant.

d. Systemic poisons. These materials cause damage to internal organs such as the liver, kidney, central nervous system, or the cardiovascular system. For example, carbon tetrachloride produces necrosis of the liver.

e. Carcinogens. These materials have demonstrated they cause cancer or are suspected of causing cancer based upon animal studies.

CAUTION

The MI7 or M40 series protective masks are not designed to protect you from most TIC hazards.

2-53. Carbon Monoxide

a. Sources of Exposure. Carbon monoxide is produced whenever fossil fuels are burned in the presence of insufficient oxygen to transform all the carbon to carbon dioxide. Carbon monoxide is produced in the incomplete combustion of coal, gasoline, natural gas, and other carbon-containing substances. It is produced in the explosion of dynamite and nitroglycerine and in the operation of blast furnaces and internally lubricated compressors. Automobile exhaust contains 5 to 10 percent or more carbon monoxide. Carbon monoxide occurs in small traces in natural gas, but incomplete burning of natural gas can produce greater amounts. Since gasoline, oil, coal, and gas are used in virtually all jobs, the potential for exposure to carbon monoxide is widespread. Carbon monoxide is a deceptive hazard, in that it is odorless, colorless, tasteless, and nonirritating, and its presence may go undetected.

b. Bodily Effects. Carbon monoxide interferes with the supply of oxygen to the tissues of the body. Normally, inhaled oxygen is transferred in the lungs to hemoglobin, which is present in all red blood cells. Hemoglobin then transports oxygen, by way of the bloodstream, to the tissue cells where transfer takes place. The affinity of hemoglobin for carbon monoxide is 250 times greater than it is for oxygen. When carbon monoxide combines with hemoglobin, the transport of oxygen to the tissue cells is blocked. Without oxygen, cells cannot live, and when the concentration of carbon monoxide is great enough, death occurs.

c. Prevention. The most common and most easily recognized potential exposure to carbon monoxide is in the motor pool maintenance shops and in quarters and office areas where space heaters are used. Whenever vehicle engines are operating, a method of disposing of the carbon monoxide-laden exhaust must be used. This is best accomplished by a combination of natural ventilation and mechanical

tailpipe extension systems that carry the exhaust outside the structure. Any space heated by a carbon fuel heater must be ventilated by fresh air; ensure that windows are slightly open.

2-54. Hydrogen Chloride

a. Source of Exposure. Hydrogen chloride is produced as an exhaust from rocket systems, such as a shoulder-fired rocket, or from vehicle-mounted rocket systems. The development and use of these highly mobile weapon systems has greatly increased the potential for exposure to this hazard.

b. Bodily Effects. Hydrogen chloride is a highly irritating gas that forms with water to produce hydrochloric acid. This acid will irritate the mucous membrane, particularly the eyes, throat, and lungs. It can cause a tissue burn and flu-like lung injury.

c. Prevention. The most common exposure to hydrogen chloride occurs during the firing process of these weapon systems. Remaining upwind of the exhaust emission and, when necessary, holding your breath until the gas cloud passes will limit your exposure.

2-55. Bore/Gun Gases

a. Source of Exposure. Conventional weapon systems, such as tanks and artillery, can produce large quantities of toxic gases when fired. The propellants produce carbon monoxide gas, lead fumes, and other toxic by-products.

b. Bodily Effects. Effects on the body from this exposure will be much the same as effects produced from exposure to hydrogen chloride and carbon monoxide.

c. Prevention. Exposure will be greatly reduced by using on-board ventilation systems and keeping the bore evacuator on larger weapon systems well maintained.

2-56. Liquid Chemicals

a. General. The most widespread, and some of the most dangerous, occupational hazards are created by liquid chemicals, such as solvents. These chemicals may present hazards from the use of the liquid itself, as a vapor of the liquid, or as a mist of the liquid. The vast majority of liquid chemicals found in the industrial workplace are organic compounds; these compounds contain carbon. They are found in plant and animal tissues and in materials, such as petroleum and coal, which result from the breakdown of living substances. Lubricants, solvents, fuels, and many insecticides are but a few of the hundreds of different compounds in use and new ones are constantly being produced. These chemicals are used in the course of most industrial-type jobs. Because of their widespread use and their harmful properties, organic compounds present significant military occupational hazards.

b. Source of Exposure. It would be virtually impossible to list all the possible occupations or industrial-type operations in which exposure to liquid chemicals occur, since so many occupations or

industrial processes use these chemicals in one way or another. There are many military situations in which individuals are exposed to potentially hazardous organic compounds in liquid form. Many different solvents and fuels are used in military operations. Vehicle and weapons maintenance requires grease, oil, and other lubricants. Field sanitation teams use premixed insecticides. Engineers and PVNTMED personnel handle insecticide concentrates.

c. Bodily Effects.

(1) *General.* The bodily effects of liquid chemicals vary widely, depending on the chemical involved. The effects on the skin, nervous system, liver, and those leading to cancer are discussed below.

(2) *Skin disease.* In terms of numbers, occupational skin diseases (dermatoses) are by far the most important of the occupational diseases. Although occupational skin conditions may cause considerable loss of time from work, usually they are not severe enough to cause permanent disability.

(*a*) The healthy skin has certain barriers against injury. The dead surface cells resist most chemicals, while the oily secretions of the skin form a protective covering against some chemicals. Deeper skin cells prevent the loss of water from the skin.

(*b*) The occurrence of occupational dermatosis depends mainly on the specific chemicals to which the skin is exposed and the length of the exposure. The presence of other skin diseases lowers resistance to exposure. Personal cleanliness is important, since failure to wash the skin or to remove dirty clothing increases the length of exposure. The type of skin is an important factor, too. People with oily skin are more likely to develop infected sweat glands, whereas those with dry skin are more affected by drying agents such as detergents. Skin disease is more prevalent in the summer than in the winter due to the fact that less clothing is worn and to the presence of sweat.

(*c*) Chemicals on the skin may cause either an irritant effect, a sensitizing effect, or both. A chemical that is classified as a skin irritant will cause irritation to any individual's skin, if left in contact with the skin long enough. Most organic compounds are considered skin irritants, although they vary greatly in strength. Chemical agents which do not cause skin disease on first contact but do so after 5 days or more of continuous or repeated contact are called sensitizing chemicals. This is a type of allergy which develops only in a small number of exposed people, depending on the chemical involved and the individual's sensitivity to that substance. Examples of chemicals capable of sensitizing are the explosives, photographic developers, epoxy mixtures, some insecticides, and some fungicides.

(3) *Nervous system effects.* It is difficult to summarize the toxic effects of organic solvents, since they vary greatly in their effects on human tissue. There is one property, however, which is common to practically all organic solvents. It is their ability to produce a loss or disturbance of sensation and sometimes a loss of consciousness. Sudden large exposures to concentrated vapors of some solvents can lead to instant unconsciousness and even death. With lower levels of exposure, less severe symptoms will be experienced. Headaches, dizziness, nausea, vomiting, and convulsions may occur. Even lower exposures may produce enough drowsiness to create an accident hazard under certain conditions. The insecticides are good examples of these toxic properties; for example, the insecticide, malathion, an organic compound, exerts its toxic action on that part of the nervous system which controls breathing, digestion, muscle strength, vision, and sweating. Thus, excessive exposure to these chemicals results in respiratory difficulty,

vomiting, muscle weakness, blurry vision, and excessive sweating, which are but a few of the many symptoms. No attempt will be made to describe the toxic effects of each specific chemical in this group.

(4) *Cancer-producing liquid chemicals*. Some liquid chemicals can cause cancer. As early as 1775, cancer of the scrotum in chimney sweeps was recognized as a hazard of that occupation. Since that time, skin cancer has been found in many other occupations in which exposure to coal tar and pitch exists. Soldiers who handle certain organic dyes must exercise caution by following the directions for their use.

2-57. Prevention and Control

a. General. Measures for the prevention and control of illnesses arising from exposure to liquid chemicals fall into three groups: environmental control, personal control, and medical control. By far the most effective category is environmental control; this type of control involves designing the work area and associated equipment to minimize the exposure of the worker to liquid chemical, its vapors or its mists. Environmental control also includes one of the most basic control measures—substituting a less toxic substance for the more toxic substance in use. Preventive medicine measures are not as effective as environmental measures; they are limited to the use of protective clothing and respirators. Medical control refers to programs encompassing preplacement physical examinations and medical surveillance of workers to detect early signs of occupational disease.

b. Occupation Dermatosis Prevention. The best prevention against occupation dermatosis is to use measures that decrease, as far as possible, contact of soldiers with the dermatitis-causing chemicals. When complete avoidance is impossible, PMM are used. These include protective clothing, protective ointments, and personal cleanliness. Protective clothing should cover every part of the body exposed to the irritating or hazardous chemical. This protective clothing, and in some cases, underclothing, must be changed and laundered daily. Contaminated work clothing should never be worn away from the workplace. Personal cleanliness is the best protective measure against occupational dermatosis. If strong irritant chemicals come into contact with the skin, they should be removed immediately with water. Washing facilities should always be readily available. Soldiers should be encouraged to consult a medical officer at the first sign of dermatosis. Delay in treatment of these conditions may result in more serious conditions requiring extensive medical treatment and evacuation. The impact of lost manpower, especially during shortage of critical military occupational specialties, may be detrimental to the unit's combat mission.

Section XI. NOISE HAZARDS

2-58. General

We live in a world of sound 24-hours each day. Even while we are sleeping, the clock ticking or the air conditioner whirring may be part of our environment. In our waking hours, we are immersed in sound: passing automobiles, overhead aircraft, weapons firing, equipment operating, people talking, and radios playing. A total lack of sound can in itself be disturbing; too much sound can be literally deafening. Exposure to certain noises can have profound physical and psychological effects on the individual. To

protect personnel against these effects, hearing conservation programs are planned and implemented at all Army installations. Management of such programs is a command responsibility. As an FST member, you will play an active role in the hearing conservation program. If you have to raise your voice to be heard, you are in a noise hazard area.

a. Noise. Noise is simply defined as unwanted sound, whether it is a pure tone, a complex of tones, or unwanted speech or music. In actual practice, the term is usually applied to sounds which have a complex character acoustically, such as those containing a large number of separate frequency components that extend over a wide range of frequencies and which are not normally generated to convey meaning or information.

b. Steady Noise. This is noise that does not significantly change in intensity or frequency with time.

c. Impulse or Impact Noise. Noise characterized by a sharp rise in intensity followed by a rapid decline in intensity, such as that produced by gunfire. It cannot be measured accurately with an ordinary sound-level meter.

d. Sound Levels. Examples of sound levels for various types of equipment are shown in Table 2-7.

Table 2-7. Examples of Sound Levels

SOURCE	SOUND PRESSURE LEVEL
AIR CHISEL	106dB(A)
AIR COMPRESSOR	94dB(A)
ALARM CLOCK (AT 2 FT)	80dB(A)
BENCH GRINDER	105dB(A)
CH-47C CHINOOK (ROTARY WING)	110dB(A)
CHAIN SAW	115dB(A)
CONVERSATION	60dB(A)
CUT-OFF SAW	97dB(A)
DIESEL TRUCK (AT 25 FT)	92dB(A)
GRINDER, ELECTRIC, 10-INCH	92dB(A)
HOWITZER, LIGHT, TOWED, 105-mm	185–191dB PEAK SOUND PRESSURE LEVEL
LAWN MOWER	98dB(A)
M14 RIFLE	160dB PEAK SOUND PRESSURE LEVEL
MACHINE GUN, 7.62-mm, M60	149–161dB PEAK SOUND PRESSURE LEVEL
PRINTING PLANT	86dB(A)
RIFLE, 5.56-mm, AUTOMATIC, M16	154–158dB PEAK SOUND PRESSURE LEVEL
RIFLE, RECOILESS, 106-mm, M40A1	171dB PEAK SOUND PRESSURE LEVEL
RIVERTER, PNEUMATIC	105–112dB(A)
RUSTLING LEAVES	20dB(A)
SAW, CHAIN, GASOLINE, 7-HP	125dB(A)
SAW, TABLE, ELECTRIC, 10-INCH	108dB(A)
TOW (TUBE LAUNCHED, OPTICAL TRACKED, WIRE GUIDED)	166–170dB PEAK SOUND PRESSURE LEVEL
TRACTOR, FULL-TRACKED, D-7E	106dB(A)
TRUCK, CARGO, 5-TON, 8 X 8, M656, M757, M759	87–101dB(A)
TRUCK, FORKLIFT, 6,000-LB, DIESEL	102dB(A)
TRUCK, FORKLIFT, 6,000-LB, GASOLINE	98dB(A)
U-6A BEAVER (FIXED WING)	99–102dB(A)
U-21A UTE (FIXED WING)	80–102dB(A)
UD-1D IROQUOIS (ROTARY WING)	96–99dB(A)
VACUUM CLEANER (AT 10 FT)	65dB(A)
VACUUM PUMP	108dB(A)
WHISPER	34dB(A)
WINDOW AIR-CONDITIONER	55dB(A)

2-59. Factors Determining the Degree of Hazard

There are four properties or characteristics of noise which determine whether a given noise is likely to be hazardous to workers' hearing.

a, Frequency. The frequency of a noise determines its pitch, which is that attribute of an auditory sensation in terms of which sounds may be ordered on a scale extending from low to high. High-frequency (high-pitched) noises are more dangerous to hearing than low-frequency (low-pitched) noises.

b. Intensity. The relative loudness of the noise, expressed in decibels (dB), will play a large part in determining the degree of hazard; the louder the noise, the greater its potential for causing hearing loss.

c. Nature of the Noise. Noise may be continuous or intermittent. It may be steady, or made up of a series of impact or impulse noises.

d. Exposure Duration. The longer the exposure, the greater the damage to the hearing mechanism. Exposure duration is usually expressed in terms of a time-weighted average, which takes into account both intensity of noise and duration of the exposure.

2-60. The Mechanics of Hearing

The human ear (Figure 2-4) is composed of three major sections: the external ear, the middle ear, and the inner ear. Each section has a distinct function in the hearing process.

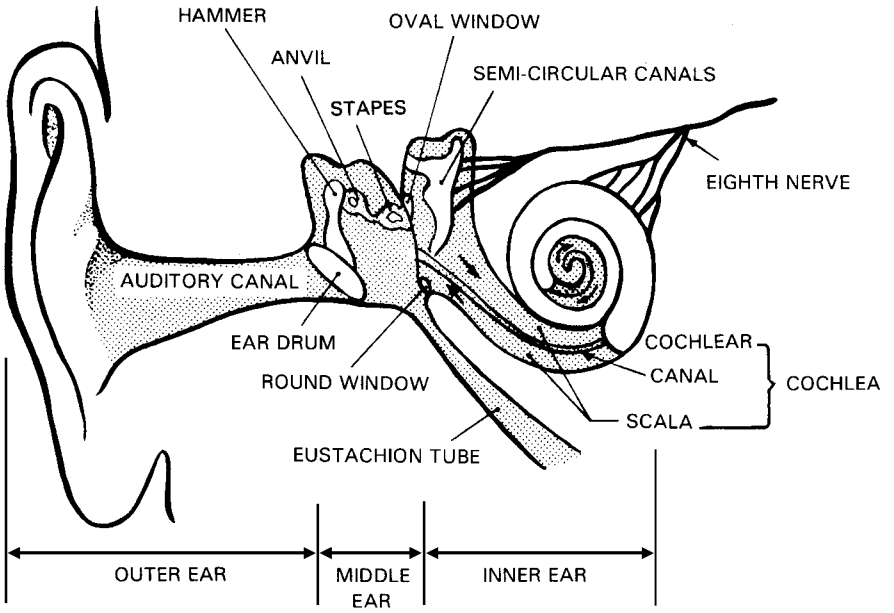

Figure 2-4. Anatomy of the human ear.

a. The external ear captures and funnels the sound waves to the middle ear where they strike the eardrum (tympanic membrane).

b. The middle ear consists of the eardrum and the space and structures just inside. The space within the middle ear is filled with air. There is a chain of small bones in the middle ear, called the malleus, the incus, and the stapes. One end of this chain rests against the eardrum, while the other end is connected to the inner ear.

c. The inner ear consists of a spiral tube filled with fluid. The spiral tube contains the *organ of Corti*, which consists of many sensory cells with delicate hairs or hair cells projecting into the fluid. As the eardrum vibrates, the chain of bones is set in motion. These motions, in turn, cause the fluid in the inner ear to vibrate. When the fluid vibrates, the hair cells are stimulated, sending impulses to the brain.

2-61. The Effects of Noise on the Ear

a. Exposure to excessive noise for extended periods of time overactivates the hairs and hair cells in the inner ear, causing injury or destruction. Such injury to the *organ of Corti* usually leads to permanent loss of hearing. There is no known treatment for such hearing loss. However, depending upon the duration of the exposure to excessive noise, hearing loss may only be temporary in nature. This acute partial loss of hearing has the most significant possible impact to the combat mission.

b. Overexposure to high frequency noise causes more significant hearing loss than overexposure to low frequency noise of the same intensity. During initial exposure, most of the hearing impairment is in the frequency range above those important to understanding speech. As a result, early damage is seldom noticed by individuals. Detection of losses in these ranges by the medical officer is important, as these early losses may be danger signs of further extensive hearing loss. Continued exposure will lead to progressively greater damage, including loss of the speech frequencies, which, if allowed to reach an advanced stage, will cause a severe handicap.

c. Other physiological effects, which are produced by excessive exposure to noise, include nausea and headaches. In many cases the reflex responses of the individual are affected.

d. Psychological stress from noise may be manifested in the form of fatigue, inability to function, annoyance, and distraction.

2-62. Preventive Medicine Measures

a. Personal protective devices to lessen the risk of hearing loss consist of earplugs and earmuffs (Table 2-8 and Figures 2-5—2-10, pages 2-71—2-73). Whichever device the exposed individual can wear comfortably and consistently is an important element in selecting the device to be worn. In exposures to extremely high, steady-state noise levels (120 dB and above), earplugs and earmuffs must be worn together. Table 2-9 (page 2-74) gives a list of earplugs and earmuffs available through medical and/or regular supply channels.

Table 2-8. General Information on Using Earplugs

1.	A GOOD SEAL SHOULD BE ACCOMPANIED BY A VACUUM SENSATION (A BACK PRESSURE). ALSO, YOUR VOICE SHOULD SOUND MUFFLED TO YOU AS IF TALKING INSIDE A BARREL.
2.	PLUGS TEND TO WORK LOOSE AS A RESULT OF TALKING AND CHEWING AND MUST BE RESEATED.
3.	LITTLE DIFFICULTY IS EXPERIENCED UNDERSTANDING SPEECH WHEN PLUGS ARE WORN, IF THE VOICE IS RAISED SLIGHTLY ABOVE THE LEVEL OF ORDINARY CONVERSATION.
4.	EVEN A SMALL LEAK DEFEATS THE PURPOSE OF WEARING PLUGS.
5.	KEEP PLUGS CLEAN WITH SOAP AND WATER, BUT ENSURE PLUGS ARE DRY WHEN RETURNED TO CASE. WHEN NOT IN USE, KEEP PLUGS IN PLASTIC CARRYING CASE PROVIDED.
6.	EAR PLUGS ARE PART OF YOUR PERSONAL ISSUE AND ARE TO BE RETAINED UPON CHANGE OF STATION.

1. PLACE EAR PLUG STEM INTO STEM HOLDER (TOP OF CASE).
2. INSERT SMALLER FLANGE IN EAR CANAL. PUSH AND TWIST FIRMLY INTO EAR CANAL.
3. IF A GOOD SEAL IS NOT OBTAINED, USE SMALLER OR LARGER SIZE. TRIPLE-FLANGE PLUGS ARE AVAILABLE IN THREE SIZES—LARGE, REGULAR, AND SMALL.

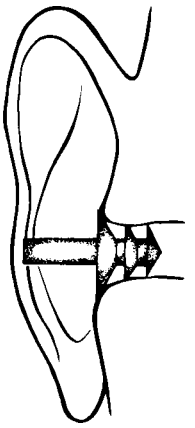

Figure 2-5. Insert triple-flange earplugs.

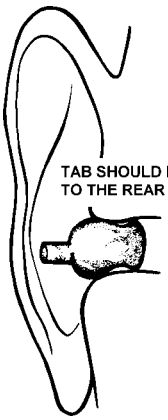

1. GRASP PLUG TAB BETWEEN THUMB AND FOREFINGER AND INSERT PLUG INTO EAR CANAL.
2. PUSH AND TWIST PLUG TOWARD REAR–CENTER OF HEAD UNTIL SEAL IS MADE.
3. IF A GOOD SEAL IS NOT OBTAINED, USE SMALLER OR LARGER SIZE. SINGLE-FLANGE PLUGS ARE AVAILABLE IN FIVE SIZES: EXTRA-SMALL, SMALL, MEDIUM, LARGE, AND EXTRA-LARGE.

Figure 2-6. Inserting single-flange earplugs.

Figure 2-7. Use of earmuffs.

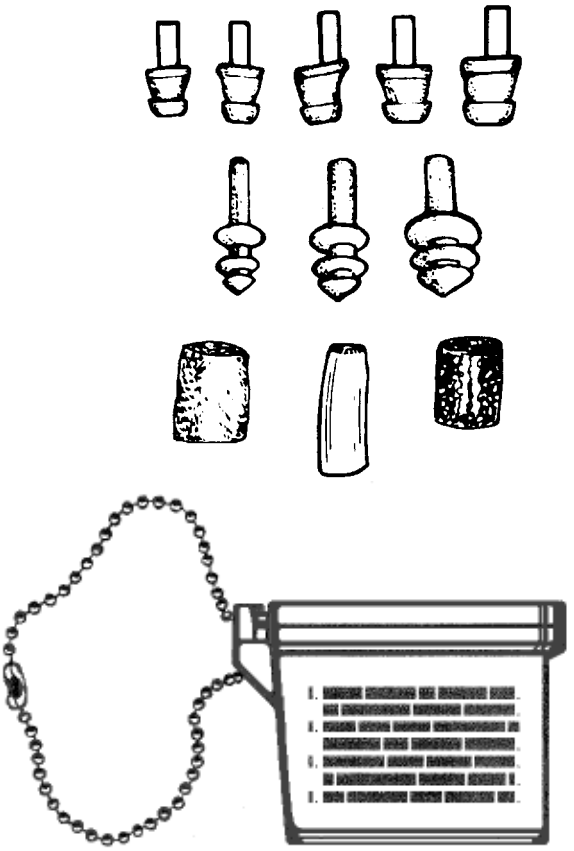

Figure 2-8. Earplugs and carrying case.

b. Well-designed and properly fitted earplugs or earmuffs will lessen the noise reaching the inner ear by 15 dB in the lower frequencies and by up to 35 dB in the higher frequencies. Wearing earplugs and earmuffs together, however, does not provide attenuation (weakening of the sound) equal to the arithmetic sum of the individual attenuation of earplugs and earmuffs worn separately. The combination of plugs and muffs provides from 35 to 40 dB noise attenuation at most frequencies. Regular use of ear protective devices is mandatory for all individuals exposed to steady-state noise in excess of 85 dB or impulse noise in excess of 140 dB.

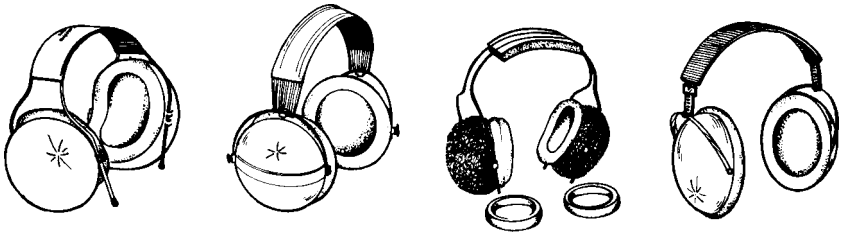

Figure 2-9. Type I earmuffs.

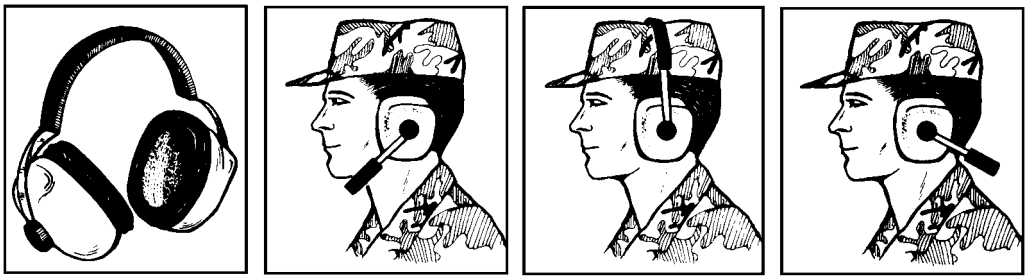

Figure 2-10. Type II earmuffs.

c. Persons with normal hearing will have little difficulty understanding speech when earplugs or earmuffs are worn, if the speakers will raise their voices slightly above the level of ordinary conversation. Actually, it is easier for a person to hear and understand auditory signals such as speech in a moderately noisy environment with ear protection than without it. For example, put a fingertip firmly into each ear while carrying on a conversation in a noisy room. You will note that the conversation is more easily understood.

d. Properly fitted earplugs will not damage a normal ear canal if the earplugs are kept reasonably clean. Plugs must be fitted individually for each ear under medical supervision (Figure 2-11, page 2-75). Occasionally, an individual's two ear canals will require earplugs of different sizes. To prevent leaks, a good seal between the ear canal and the earplug is very important. A really good seal may cause some initial discomfort to the wearer.

e. When earmuffs are chosen in preference to earplugs, the headband must be properly adjusted to ensure a snug fit.

(1) When eyeglasses are worn at the same time as earmuffs, it is important that the flange of the muff fit well around the temple of the glasses. Even a small "leak" will completely destroy the purpose of the ear protector, yet the wearer will have a false sense of security because of wearing the protector.

(2) A related problem with earplugs is that they tend to work loose as a result of talking and chewing. Therefore, earplugs must be reseated from time to time during the workday.

(3) The only effective ear protector is one that is worn consistently. Hearing damage becomes progressively worse with each additional exposure; personnel must be convinced of the importance of wearing their ear protectors.

Table 2-9. Hearing Protector Devices

EAR PLUGS AVAILABLE THROUGH MEDICAL SUPPLY CHANNELS:
PLUG, EAR, HEARING PROTECTION, SINGLE-FLANGE, 24s NSN 6515-00-442-4765, EXTRA-SMALL, WHITE NSN 6515-00-467-0085, SMALL, GREEN NSN 6515-00-467-0089, MEDIUM, INTERNATIONAL ORANGE NSN 6515-00-442-4807, LARGE, BLUE NSN 6515-00-442-4813, EXTRA-LARGE, RED NSN 6515-00-181-8058, RUBBER, UNIVERSAL SIZE NSN 6515-01-100-1674, CASE, EAR PLUG, W/EAR PLUG INSERTER, 20s (THIS CASE HOLDS ONE PAIR OF TRIPLE-FLANGE EAR PLUGS.)
PLUG, EAR, HEARING PROTECTION, TRIPLE-FLANGE NSN 6515-00-442-4818, REGULAR, INTERNATIONAL ORANGE, 24s NSN 6515-00-467-0092, LARGE, BLUE, 24s NSN 6515-00-442-4821, SMALL, GREEN, 24s
PLUG, EAR, HEARING PROTECTION, CYLINDRICAL NSN 6515-00-721-9092, DISPOSABLE 100s NSN 65615-00-133-5416, DISPOSABLE 200s NSN 6515-00-137-6345, UNIVERSAL SIZE 400s NSN 6515-00-157-1278, W/CORD UNIVERSAL SIZE 200s NSN 65615-00-135-2612, UNIVERSAL 48s
EARMUFFS/HELMETS AVAILABLE THROUGH REGULAR SUPPLY CHANNELS:
EARMUFFS, AURAL PROTECTOR, SOUND, TYPE II NSN 4240-00-022-2946 HELMET, FLYERS, CRASH TYPE (SPH-4) NSN 8415-00-144-4981 (REGULAR) NSN 8415-00-144-4985 (EXTRA-LARGE) HELMET, COMBAT VEHICLE CREWMANS (DH-132) NSN 8415-00-094-2679 (SMALL) NSN 8415-00-094-2691 (MEDIUM) NSN 8415-00-094-2684 (LARGE)

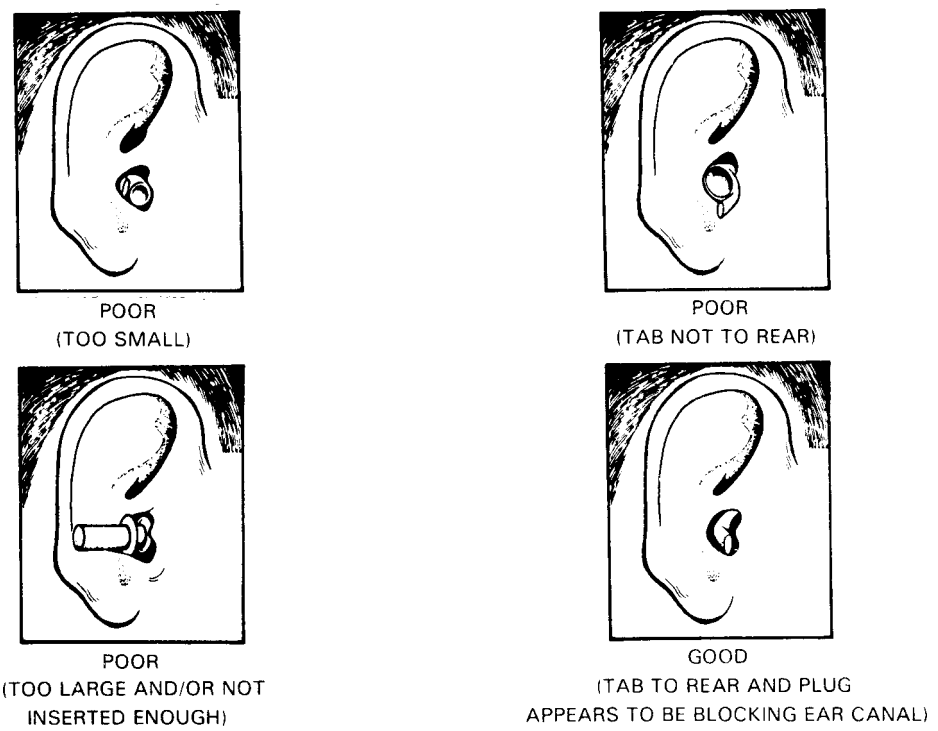

Figure 2-11. Examples of poorly fitted/poorly inserted earplugs and a well-fitted/properly seated earplug.

APPENDIX A

FIELD SANITATION TEAM TRAINING COURSE

The following lesson plans are outlines that can be used when you are unable to obtain the formal course CD-ROM. The CD-ROM is available and may be ordered from the Nonresident Instruction Branch, Department of Academic Support, Academy of Health Sciences, AMEDDC&S, Fort Sam Houston, Texas 78234-6100 (DSN 471-5877/commercial 210-221-5877). The title of the CD-ROM/course is *Field Sanitation Team Certification Course, FSTCC08 SGI*. The 15 lesson plans will take approximately 29.5 hours of instruction. They follow the Master Plan presented in Chapter 1 of this publication. Instructors of this course should order the CD-ROM to acquire the accompanying lesson plans and slides for each lesson. Appendix B lists the equipment and materials needed to conduct the training, along with figures of various materials and/or sample setups. When the Distance Learning Program is completed, updated lesson plans will be available on the AMEDD website.

LESSON 1—INTRODUCTION
(30 minutes)

COURSES PRESENTED TO: Field Sanitation Team Members.

PLACE: Classroom.

REFERENCES: None.

RELATED SOLDIERS MANUAL/MOS TASKS: None.

STUDY ASSIGNMENT: None.

STUDENT UNIFORM AND EQUIPMENT: Uniform of the day.

TOOLS, EQUIPMENT, AND MATERIALS: None.

PERSONNEL: One instructor.

INSTRUCTIONAL AIDS: None.

TROOP REQUIREMENTS: None.

TRANSPORTATION REQUIREMENTS: None.

RISK ASSESSMENT: Low.

SAFETY REQUIREMENT: None.

METHODS OF INSTRUCTION: Conference, 30 minutes.

I. INTRODUCTION (3 minutes).

A. Provide a motivational opening appropriate to your student population such as the following. You are here because your unit commander has appointed you a member of the FST. As a member of the FST, you will be asked to assist the commander in what could be your unit's toughest mission: the battle against disease and nonbattle injury, or DNBI. As you will see as we progress through this course, history is riddled with examples of failed missions due to disease and nonbattle injury. It is your job, as a member of the field sanitation team, to ensure that your unit does not repeat history. The effectiveness with which you accomplish the critical tasks taught in this course will have a major effect on the health of your fellow soldiers as well as the success of your unit's mission and the mission of the Army.

B. Lesson Topics.

1. Inform the students of the topics that will be covered in this lesson.

2. Ask for and answer any questions the students might have about their mission.

II. PRESENTATION (25 minutes).

A. Purpose. The purpose of the field sanitation team training is to teach the skills and knowledge required for you to become an effective member of the field sanitation team. The course ensures that small units have preventive medicine resources to reduce the occurrence of disease and nonbattle injuries as required by AR 40-5, Preventive Medicine. The information in each lesson is taught and tested in accordance with FM 21-10, Field Hygiene and Sanitation, and FM 4-25.12, Unit Field Sanitation Team.

B. Administrative Concerns. The unit field sanitation team must consist of at least two soldiers, one of which must be a noncommissioned officer. The following personal qualifications must be met and the administrative conditions adhered to.

1. Personnel qualifications.

(a) Soldiers in this class should have at least six months of service remaining with their unit. This requirement was established to ensure that the unit gains the most benefit from the training you receive.

NOTE: Ask students for a show of hands of those who do not have at least six months remaining with their units. Soldiers that do not meet the time-in-service requirement should be returned to their respective unit.

(b) Organic combat medics should be used as FST members.

NOTE: All FST member candidates will receive the same training regardless of their MOS/AOC.

2. Course administrative concerns. Administrative concerns as they pertain to the course presented to the students.

3. Site administrative concerns. Administrative concerns as they pertain to your classroom location should be presented to the students.

NOTE: In this section, present the rules and regulations that students must be made aware of in your classroom location.

C. Course Structure and Testing. Explain to the students how this course is structured and what the testing requirements are.

1. Course structure. This course consists of 15 lessons designed to enhance, sustain, or provide the initial training for the field sanitation team members. Total training time for this course is approximately 29.5 hours.

2. Testing. One or more examinations will be administered to determine your mastery of the information presented in the course. The minimum passing score for the test(s) is 70 percent.

(a) Students who fail the test(s) will be given a lesson review and retested.

(b) Students who fail to pass the retest will be dismissed from the course and returned to their unit.

III. SUMMARY (2 minutes).

A. Summary of Main Points. Ask for and answer any questions the students might have about the lesson material.

B. Closing Statement. The role of the FST is to aid the commander in protecting the health of the soldiers in your unit by advising and assisting in many duties essential to reducing injuries and illnesses not directly related to combat. My goal in the next fifteen class sessions is to train you to operate effectively as a member of the FST. Remember that the information you receive here is vital to the survival of the soldiers in your unit and success of your unit's mission.

LESSON 2—THE MEDICAL THREAT TO FIELD FORCES AND PREVENTIVE MEDICINE MEASURES (1 hour)

COURSES PRESENTED TO: Field Sanitation Team Members.

PLACE: Classroom.

REFERENCES:

FM 21-10, FIELD HYGIENE AND SANITATION, 21 June 2000.

FM 4-25.12, UNIT FIELD SANITATION TEAM.

RELATED SOLDIERS MANUAL/MOS TASKS: None.

STUDY ASSIGNMENT: None.

STUDENT UNIFORM AND EQUIPMENT: Uniform of the day.

TOOLS, EQUIPMENT, AND MATERIALS: None.

PERSONNEL: One instructor.

INSTRUCTIONAL AIDS: None.

TROOP REQUIREMENTS: None.

TRANSPORTATION REQUIREMENTS: None.

RISK ASSESSMENT: Low.

SAFETY REQUIREMENT: None.

METHODS OF INSTRUCTION: Conference, 1 hour.

I. INTRODUCTION (3 minutes).

A. Opening Statement: Provide a motivational opening appropriate to your student population such as the following. Statistics for the conflicts in which the United States has been involved, reveal that three times as many soldiers have died from DNBI than the number of soldiers lost as a result of enemy contact. You are taught and trained to protect yourself from enemy weaponry, but the environment poses a significant threat to soldiers, as well. As a member of the FST, you must be aware of the dangers posed by the environment and assist the commander in making decisions that will keep the soldiers in your unit healthy and combat-effective.

B. Objectives.

1. Terminal Learning Objective: Inform the students of the terminal learning objective for this lesson: Given classroom instruction, FM 21-10 and FM 4-25.12, utilize appropriate preventive medicine measures (PMM) to overcome medical threats to field forces IAW FM 21-10 and FM 4-25.12.

2. Enabling Learning Objectives: Inform the students of the enabling learning objectives for this lesson.

(a) Identify medical threats to field forces.

(b) Identify circumstances under which a soldier, in a field setting, would not practice proper personal hygiene.

(c) Identify the field sanitation team's roles as they pertain to sanitation and preventive medicine measures.

II. EXPLANATION (45 minutes).

A. Introduction to the Medical Threat: Introduce the student to the concept of medical threat. Explain that although the medical threats have been classified as major and minor, that all threats should be treated as potentially lethal.

B. The Medical Threat to Field Forces: History has revealed that casualties caused by DNBI have a serious impact on military operations. There are four major and three minor threats to field forces

that have contributed to the number of DNBI in military operations. We will look at each of them individually along with an example or two from history. By studying the impact of the medical threat from a historical perspective, you can become more effective members of the field sanitation team. It is your duty as part of this team to see to it that the soldiers in your unit do not repeat history.

C. The Four Major Medical Threats: Introduce the four major medical threats to field forces. Explain that major medical threats are those that occur most often in the field. Make sure that students are aware that these medical threats exist in peacetime as well as wartime operations, and that they should be conscious of their impact in both situations.

1. HEAT is the most lethal of all the factors working against field forces.

(a) Heat is as effective as tactical weapons in impacting unit operations, as was proven in the 1967 Egyptian-Israeli conflict.

(b) In the 1982 US Sinai Peacekeeping action, 35 soldiers from an airborne company were so badly dehydrated they required intravenous fluids to recover.

2. COLD is also incapacitating on the battlefield.

(a) Over 90,000 US soldiers were admitted to hospitals with cold injuries during World War II.

(b) While in combat for 24 days on the Falkland Islands, cold injuries accounted for 14 percent of the British casualties. How? The British, concerned about the possible number of cold weather casualties, conducted their main assault before they were fully prepared. By rushing their assault and going in unprepared, they actually increased the number of combat injuries they sustained.

3. ARTHROPODBORNE ILLNESS can adversely affect military operations.

(a) Only 100,000 of Napoleon's 600,000-man army returned to France from Russia in 1812.

(b) During the campaign for the Solomon Islands, malaria infection resulted in eight times more casualties than were caused by the Japanese.

4. DIARRHEAL DISEASE is contracted from contaminated water and food, and it has a catastrophic impact on the fighting force.

(a) Not one of Rommel's highly successful generals was available to help him when he needed them most for his desert campaign in North Africa at El Alamein.

(b) The US commander of the 1980 exercise Operation Bright Star, rewarded his troops for a job well done with a night in town prior to redeployment. Thirty percent of his troops awoke the next day infected with shigellosis. All were vomiting and had severe diarrhea on the flight back to the states.

QUESTION: Of the four major medical threats, which is the most lethal?

ANSWER: Heat.

DISCUSSION: Of the four major medical threats, heat is the most lethal. In conflicts, it is often used in conjunction with the destruction or elimination of the enemy's water supply lines. As illustrated by the Egyptian-Israeli conflict, its effects can quickly incapacitate large numbers of soldiers.

D. The Three Minor Medical Threats: Introduce the three minor medical threats to field forces.

1. Toxic industrial materials (TIM), exist throughout modern society. They may be beneficial to us in small quantities, but when they are spilled in large quantities or are misused, they can become harmful, or even deadly, to humans.

(a) These materials consist of TIM hazards such as solvents, fuels, and cleaning chemicals.

(b) If not properly used, stored, or disposed of, TIM can become extremely dangerous.

2. Noise is also a constant threat in military operations. The Army has many types of heavy equipment, weapon-systems, and generators that can have immediate, as well as gradual, detrimental effects on our hearing.

(a) Exposed to very loud concussion noises may cause an acute, or short-term, hearing loss.

(b) Prolonged exposure to vehicle and generator noises can cause a chronic, or long-term, damage to your hearing.

3. Pests other than arthropods, like mice and rats, are attracted to human dwellings for the shelter and food.

(a) Other pests include wild animals like snakes, bats, coyotes, as well as stray dogs and cats.

(b) These creatures can hurt you with poisonous bites and the possible spread of disease.

(c) Did you know that you don't need to be bitten to contract rabies? Even a cute, cuddly puppy can transmit rabies through its saliva.

QUESTION: A soldier who is exposed to vehicle and generator noises without wearing hearing protection can sustain what type of hearing loss?

ANSWER: Chronic, or long-term, hearing loss.

DISCUSSION: Frequent or prolonged exposure to vehicle or generator noises without hearing protection can cause chronic, or long-term, hearing loss. In fact, it could result in a twenty to fifty percent hearing loss over a twenty-year career.

E. Circumstances Contributing to Poor Personal Hygiene.

1. Ordinarily, the US soldier maintains a high standard when it comes to personal hygiene.

2. The human body has an enormous capacity to protect itself against disease and climatic injury.

3. Soldiers have the potential to encounter a wide range of climates, from mosquito-infested jungles and sand fly-infested villages to hot, dusty deserts and cold, windy plains.

4. Deploying soldiers halfway around the world can disrupt their circadian rhythm, or their body's natural cycle.

5. The problems you face in the prevention or reduction of DNBI pertain not only to the existing natural elements, but also to the soldiers' reactions to them.

QUESTION: What environmental factors may make a soldier more susceptible to illness and combat stress?

ANSWER: Unfamiliar environments, adverse weather conditions, feeding meals at irregular hours, and sleep deprivation.

DISCUSSION: Be aware of the environmental influences listed above when you are analyzing your unit's situation and making recommendations. Not only must you consider the effects of these environmental influences, but also the soldiers' reactions to them.

F. Roles of the Field Sanitation Team: The commander is ultimately responsible for ensuring the health of the troops. Therefore, the commander must have a clear understanding of the direct relationship between a soldier's health and mission accomplishment and emphasize this at all levels. The commander appoints a functional FST to assist in ensuring that preventive medicine measures are practiced to a high degree at all levels. To properly assist the commander in assessing the medical threat, FST members must be able to perform several tasks.

1. Inspect unit water containers and trailers; check unit water supply for chlorine and disinfect as required.

(a) Water is essential to the army in the field. Inspection of water containers and the unit's water supply will help eliminate such waterborne diseases as hepatitis, typhoid, and amoebic dysentery.

(b) Checking the unit's water supply for the proper levels of chlorination will reduce the potential for chemical poisoning that occurs with excessive chlorination.

2. Direct Unit Field Food Sanitation Operations.

(a) The conditions under which food is transported, stored, prepared, and served can have a direct bearing on the success of a mission.

(b) Monitoring the unit's field food operations is vital to the soldiers' health, as well as the overall moral of the unit.

3. Direct unit field waste disposal operations.

(a) The proper disposal of all wastes is essential in preventing the spread of disease.

(b) As a member of the Field Sanitation Team you must assist the commander in the selection and construction of proper waste disposal devices.

4. Control arthropods and other animals in unit area.

5. Monitor status of PMM in unit against heat, cold, arthropodborne illness, diarrheal disease, noise hazards, and toxic industrial chemical threats.

6. Assist in selection of the unit bivouac.

7. Supervise the construction of all field sanitation devices.

G. The Three Principles of PMM: Inform the students that these principles must be applied to ensure the success of the unit's mission.

1. First, the individual soldier is responsible for putting individual PMM into practice.

2. Second, the commander is responsible for implementing and enforcing PMM.

3. Finally, the FST is responsible for advising the commander and training the unit's soldiers.

H. Ask for and answer any questions the students might have about the lesson material.

QUESTION: While walking through your unit area, you pass some mechanics who are working on large vehicles. No one in the vicinity is wearing hearing protection, yet many of the engines are running and the soldiers are yelling to each other to be heard above them. What recommendation do you make?

ANSWER: Soldiers should wear hearing protection.

DISCUSSION: Frequent and long-term exposure to noise can cause permanent hearing loss. To avoid the ill effects of noise, always wear hearing protection.

III. SUMMARY (2 minutes).

A. Review the Main Points.

1. The major and minor medical threats to field forces.

2. Circumstances under which a soldier, in a field setting, would abandon proper personal hygiene practices.

3. The field sanitation team's roles as they pertain to sanitation and preventive medicine measures.

B. Closing Statement: During this lesson you have identified four major and three minor medical threats to field forces, circumstances that may influence a soldier's personal hygiene, and the role of the FST. As you can see, your role as a member of the FST encompasses a broad list of tasks. Throughout the course you will be taught these specific tasks in detail. The commander will come to rely on you for the knowledge and experience you receive in this course.

LESSON 3—PERSONAL HYGIENE AND PREVENTIVE MEDICINE MEASURES (1 hour)

COURSES PRESENTED TO: Field Sanitation Team Members.

PLACE: Classroom.

REFERENCES:

FM 21-10, FIELD HYGIENE AND SANITATION, 21 June 2000.

FM 4-25.12, UNIT FIELD SANITATION TEAM.

RELATED SOLDIERS MANUAL/MOS TASKS: None.

STUDY ASSIGNMENT: None.

STUDENT UNIFORM AND EQUIPMENT: Uniform of the day.

TOOLS, EQUIPMENT, AND MATERIALS: None.

PERSONNEL: One instructor.

INSTRUCTIONAL AIDS: None.

TROOP REQUIREMENTS: None.

TRANSPORTATION REQUIREMENTS: None.

RISK ASSESSMENT: Low.

SAFETY REQUIREMENT: None.

METHODS OF INSTRUCTION: Conference, 1 hour.

I. INTRODUCTION (3 minutes).

A. Opening Statement: Provide a motivational opening appropriate to your student population such as the following. Personal hygiene is a lot broader than the isolated area of personal cleanliness that is associated with it. While cleanliness is important, it is only one of the elements essential to healthy living. To round out the total health concept, there has to be a balance of the mental as well as the physical aspects of personal hygiene. As a member of the Field Sanitation Team (FST), you must be able to direct the soldiers in your unit in the preventive medicine measures necessary to maintain overall physical and mental health in order to keep them combat-ready.

B. Objectives.

1. Terminal Learning Objective: Inform the students of the terminal learning objective for this lesson: Given classroom instruction, FM 21-10 and FM 4-25.12, direct personal hygiene practices IAW FM 21-10 and FM 4-25.12.

2. Enabling Learning Objectives: Inform the students of the enabling learning objectives for this lesson.

(a) Recognize proper personal hygiene practices associated with the care of the skin, hair, hands, mouth and teeth, and clothing.

(b) Recognize proper personal hygiene practices associated with the care of the feet.

(c) Identify nutritional elements associated with maintaining good health.

(d) Identify physical fitness factors associated with the maintenance of good health.

(e) Recognize personal hygiene practices used to avoid diseases and injuries associated with the environment.

(f) Identify mental fitness concepts associated with the maintenance of good health.

II. EXPLANATION (45 minutes).

NOTE: Stress to the student the importance of personal hygiene.

A. Personal Cleanliness.

1. Skin care.

(a) The body should be washed with soap and water from head to toe as often as possible.

(b) Seek prompt medical attention for all infected cuts and burns.

(c) Special considerations—Arctic conditions.

(1) Washing in an Arctic environment may be accomplished by dry washing with snow.

(2) Shave at night to allow oil replacement by morning.

2. Hair care.

3. Hands.

4. Clothing.

5. Care of the mouth and teeth.

6. Prosthetic devices and fillings.

NOTE: Stress to students that although prosthetics are not your actual teeth, care must still be given to the inside of the mouth and tongue where bacteria can easily grow.

QUESTION: To what areas should you pay particular attention when taking a sponge bath?

ANSWER: The armpits, face, hands, feet, and genitalia.

DISCUSSION: We know that not every field situation will allow for the construction of showers. Under such circumstances, take sponge baths and wash all of the body creases, such as the armpits and groin. Also be sure to wash your hands, your feet, your face and your genitalia.

QUESTION: What is the importance of wearing a clean uniform?

ANSWER: Dirty clothing harbors disease. Also, dirt and grease render the BDU ineffective as an insulator.

DISCUSSION: If you work at keeping your body clean, it doesn't make sense to wear dirty clothing. Your BDU is designed to protect you from the environment. Dirty clothes harbor disease germs that may cause infections.

7. Foot care. Explain to the students that although today's weaponry may resemble something out of "Star Wars," it is still the basic foot soldier who will be carrying it. Proper care of the feet has not gone out of style. It is essential to follow these simple rules.

(a) The feet should be washed with soap and water at least once a day, paying particular attention to between the toes and under the nails.

(b) The feet should be thoroughly dried all over and aired before putting socks back on. If your feet perspire a great deal, it is wise to use foot powder on them at least twice a day.

(c) Foot powder. Apply foot powder lightly and evenly over the top and bottom surface of the feet as well as between the toes.

(d) Clean feet by rubbing them with foot powder in cold climates or where water is not available.

(e) Shoes—There should not be any pressure points or binding spots. Nor should the shoe be so large that the foot moves inside of it.

(f) Socks—Socks should be changed daily and washed.

(1) Woolen socks should be purchased one size larger than cotton socks to allow for shrinkage.

(2) Socks with holes or poorly darned socks may cause blisters and should be discarded.

(3) Different types of socks are provided for various footgear. Their proper use should be learned upon issue.

(g) Blisters. Avoid getting blisters by wearing properly fitted socks and boots. Also be sure that boots are properly broken in before wearing them on long hauls such as road marches.

(h) Ingrown toenails result from cutting the toenail to the contour of the toe rather than straight across. Avoid ingrown toenails by ensuring that the nail is cut straight across the toe.

(i) Athlete's foot infection is one of the most common skin diseases. Avoid serious trouble with athlete's foot by practicing good foot hygiene as outlined above.

8. Foot care on road marches.

(a) Preparing for the road march.

(1) Deficiencies in supply or properly fitted gear should be taken care of at this time.

NOTE: Impress to students that soldiers should never attempt to break in new boots on a march!

(2) Blisters or other problems with the feet should be taken care of before the march.

(b) On the road march.

(1) On the march, the feet should be kept as dry as possible.

(2) Tender pressure points should be relieved promptly by adjusting gear or applying moleskin or adhesive tape.

(c) Once or twice daily while on the march, you should attempt to dust your feet with powder.

9. Care of the feet during rest periods.

10. Care of the feet after the march.

(a) All used socks should be washed thoroughly with soap and water, stretched to facilitate drying, and hung in the sun or in an air current to dry.

(b) Woolen socks should be washed in cold water to prevent shrinkage.

(c) Feet should be inspected for potential trouble spots. Soldiers with blisters or infections should seek medical attention immediately.

QUESTION: You are on a road march. What care should be given to your feet during the rest periods?

ANSWER: Inspect your feet for potential trouble spots, wash them, elevate them.

DISCUSSION: Your feet need special attention during a road march to avoid discomfort and injury. During rest periods, the feet should be inspected for potential trouble spots. Tender pressure points should be promptly relieved by adjusting gear or applying moleskin or adhesive tape. The feet should also be washed and dried, and then elevated to reduce swelling and muscle congestion.

QUESTION: How often should you wash your feet?

ANSWER: At least once a day.

DISCUSSION: Your feet should be washed at least once per day. During the daily washing of your feet, you should pay particular attention to the areas between your toes and under your nails. Your feet should be thoroughly dried and aired before putting on your socks and shoes.

B. Nutrition. For proper strength, development, and survival, the human body requires protein for muscle development, fats and carbohydrates for energy, minerals for blood and bone development, and certain essential vitamins, and water.

1. The Army ration provides these essential food elements in adequate amounts and in the proper balance.

2. A normal intake of food usually provides all of the essential elements needed by the body, but supplements are occasionally needed such as extra amounts of salt in hot climates or vitamins for special situations.

NOTE: Coffee, tea, alcohol, etc., taken in moderation will not extensively hurt the body, but juices, milk and plain water should be the beverage of choice.

C. Physical Fitness. Regular exercise is necessary to maintain stamina and good health.

D. Rest and Relaxation. Our bodies require rest to restore our mental and physical vigor. Six to nine hours of uninterrupted sleep a night is desirable, but in the military, situations often make this impossible. It is up to the individual soldier to learn how to take advantage of spare time, and to relax, even if they cannot sleep.

E. Protection from the Environment.

1. Protection from the elements.

2. Protection against disease-bearing insects.

(a) Keep your uniform and body as clean as possible.

(b) Observe the proper use of repellents.

(c) Observe the proper wear of uniform.

3. Avoid possible sources of disease.

(a) Army basic protective measures. Provisions for food and water that is free from disease organisms and poisons, sanitary disposal of body wastes and the elimination of insects and rodents are all ways the Army protects its soldiers from disease.

(b) Army special protective procedures. Drug prophylaxis, immunizations, and the detection and treatment of cases of communicable disease are additional measures that can be implemented.

(c) Individual's basic protective measures. Each soldier must avoid food and water that may be contaminated.

NOTE: Special protective measures. Each geographical area, climate, and living situation has its own special health hazard.

F. Mental Health Concepts. For total health you need a healthy mind as well as a healthy body. The two are unbreakably linked.

1. Friendliness. No man is an island.

2. Tolerance. Apply the golden rule. The Army is composed of individuals of various ages, backgrounds, and religious beliefs.

3. Combating worry. Although worry cannot be shut off like a faucet there are always ways of combating it.

4. Combating fear. Fear is a normal reaction. It serves an important purpose of preparing the body for action, for self-defense.

QUESTION: What nutritional elements provide your body with energy?

ANSWER: Carbohydrates and fats.

DISCUSSION: The human body requires several food substances in order to maintain strength, for tissue and muscle development, and for survival.

QUESTION: How many hours of sleep is considered ideal?

ANSWER: Six to nine hours of uninterrupted sleep.

DISCUSSION: Our bodies require rest to restore our mental and physical vigor.

QUESTION: What mental concept is demonstrated by respecting an individual's beliefs and habits?

ANSWER: Tolerance.

DISCUSSION: Remember and apply the golden rule. The Army is composed of individuals of many varying backgrounds, ages, and religious beliefs.

G. Guidance for Avoiding Illness in the Field.

1. Don't consume foods and beverage from unauthorized, unapproved sources.

2. Don't contaminate the ground with urine or feces.

3. Keep fingers and other contaminated objects out of your mouth.

4. Clean your mess kit thoroughly after each meal, and let it air dry.

5. Avoid unnecessary exposure to wet and cold.

6. Avoid insect bites by keeping your body clean, wearing your uniform in the proper manner, and using repellents and bed nets as instructed.

7. Don't share personal items with anyone.

8. Don't take a laxative for pain in the stomach.

9. Don't throw food scraps, cans, and refuse about the camp area.

10. Avoid unnecessary contact with sources of disease, especially in areas where native sanitation is poor.

11. When possible, get six to nine hours of uninterrupted sleep each night.

H. Ask for and answer any questions the students might have about the lesson material.

III. SUMMARY (2 minutes).

A. Review the Main Points.

1. Proper personal hygiene practices associated with the care of the skin, hair, hands, mouth and teeth, and clothing.

2. Proper personal hygiene practices associated with the care of the feet.

3. The nutritional elements associated with maintaining good health.

4. The physical fitness factors associated with the maintenance of good health.

5. Proper personal hygiene practices necessary to avoid diseases and injuries associated with the environment.

6. The mental fitness concepts associated with the maintenance of good health.

B. Closing Statement: During this lesson you have learned the importance of personal hygiene and preventive medicine measures. It is not easy to maintain good personal hygiene while out of our normal environment, but it is critical if we are to remain a functional fighting force. Disease and injury due to poor personal hygiene practices can decimate a unit and leave it vulnerable to enemy attack. Take the time necessary to perform personal hygiene as often as possible. A little prevention can go a long way.

LESSON 4—WATER SUPPLY IN THE FIELD
(3 hours)

COURSES PRESENTED TO: Field Sanitation Team Members.

PLACE: Classroom.

REFERENCES:

FM 21-10, FIELD HYGIENE AND SANITATION, 21 June 2000.

FM 4-25.12, UNIT FIELD SANITATION TEAM.

TB MED 577, OCCUPATIONAL AND ENVIRONMENTAL HEALTH: SANITARY CONTROL AND SURVEILLANCE OF FIELD WATER SUPPLIES, 7 March 1986.

RELATED SOLDIERS MANUAL/MOS TASKS: None.

STUDY ASSIGNMENT: None.

STUDENT UNIFORM AND EQUIPMENT: Uniform of the day.

TOOLS, EQUIPMENT, AND MATERIALS: None.

PERSONNEL: One instructor.

INSTRUCTIONAL AIDS: None.

TROOP REQUIREMENTS: None.

TRANSPORTATION REQUIREMENTS: None.

RISK ASSESSMENT: Low.

SAFETY REQUIREMENT: None.

METHODS OF INSTRUCTION: Conference, 3 hours.

I. INTRODUCTION (3 minutes).

A. Provide a motivational opening appropriate to your student population such as the following. In combat, safe water ranks in importance with ammunition and food. It often has an important bearing on the success or failure of a mission. In this lesson you will learn the importance of water in the practice of sanitation, responsibilities for producing safe water in the field, sources of safe water, and procedures for disinfecting water.

B. Objectives.

1. Terminal Learning Objective. Inform the students of the terminal learning objective for this lesson: Given classroom instruction, FM 21-10 and FM 4-25.12, direct field water supply practices IAW FM 21-10 and FM 4-25.12.

2. Enabling Learning Objectives. Inform the students of the enabling learning objectives for this lesson.

(a) Describe general field water supply practices.

(b) Determine the best water source based upon the unit's situation.

(c) Demonstrate the knowledge of the steps to disinfect water in the field.

(d) Demonstrate the knowledge of the steps to perform chlorine residual monitoring.

II. EXPLANATION (135 minutes).

A. Definitions. Provide the students with the following definitions.

1. Palatable water.

2. Potable water.

3. Water treatment.

4. Disinfection.

5. Chlorination.

6. Chlorine dosage.

7. Chlorine demand.

8. Chlorine residual.

9. Parts per million (ppm).

QUESTION: What term is defined as a treatment process that combines the water with chlorine or chlorine compound?

ANSWER: Chlorination.

QUESTION: What is the difference between water that is potable and water that is palatable?

ANSWER: Potable water is fit for human consumption. Palatable water looks, smells, and tastes good. It is not necessarily fit to drink.

NOTE: Continue to query the students on the definitions you discussed and ensure their understanding before you continue.

B. Safe Water is Essential.

1. When in the field, soldiers must be supplied with sufficient water to drink and maintain personal hygiene and maximum health.

2. The water must be safe to drink and should be reasonably free of objectionable tastes, odors, turbidity, and color. (NOTE: Water that is turbid is opaque with suspended foreign particles.)

C. Water is a Vehicle in Disease Transmission. Waterborne disease organisms are a contributing source of disease to soldiers in a field environment.

1. Common waterborne diseases of man are hepatitis, typhoid, bacillary and amoebic dysentery, cholera, leptospirosis, giardia and schistosomiasis.

2. No direct method has been developed for detecting the minimum infectious quantities of disease organisms in water.

D. Water is Tested for the Presence of Coliform Bacteria.

1. Coliform bacteria are found in great numbers in the excreta (feces) of humans, warm-blooded animals, and in the soil. Because of this, water may be contaminated many times between the point where it is produced and the point of consumption.

2. Although the presence of coliform bacteria in water may not prove fecal contamination, it is an indication that pathogenic (disease-carrying) organisms may be present. This test is the best indicator that contamination exists.

3. Many military units in the field do not have the capability for determining the presence of coliform bacteria in water, so all water must be thoroughly treated and disinfected before use.

E. Water Requirements.

1. A general guide for planning to meet the water requirements in an arid zone is 3 to 6 gallons per individual per day unless improvised showering facilities are made available. In this case, the requirement should be increased to 15 gallons or more.

2. Additional amounts of water are required for personal hygiene and cooking.

3. You may think that soldiers working in a cold climate do not need as much water for mission success as soldiers deployed to a hot desert climate.

NOTE: Water requirement information is available in FM 10-52.

QUESTION: Where are many of the harmful bacteria responsible for waterborne disease transmissions found?

ANSWER: The feces of warm-blooded animals and in the soil.

DISCUSSION: Since many harmful disease organisms live in fecal matter and in the soil, the water maybe contaminated many times between where it is produced and where troops receive it to consume. All it takes is a small amount of contaminated dirt to enter the water trailer for potential health problems to arise.

QUESTION: What is the daily water requirement per soldier for a unit that is deployed to an arid climate.

ANSWER: 3 to 6 gallons of water.

DISCUSSION: It is important to consider the season, geographical location and tactical situation when determining potable water needs for your unit. Under normal circumstances, you should anticipate a need for 3 to 6 gallons of water per soldier per day. If shower facilities are constructed, this requirement goes up to 15 gallons of water per soldier per day.

F. Production of Potable Water in the Field.

1. Army Medical Department responsibilities.

2. Corps of Engineers responsibilities.

3. Quartermaster Corps responsibilities.

4. Unit commander responsibilities.

G. Rules of Water Discipline.

1. Drink approved water only.

2. Prevent water waste.

3. Protect water sources with good sanitary practices.

QUESTION: Who is responsible for the selection and establishment of water points?

ANSWER: The Corps of Engineers.

QUESTION: What are the commander's responsibilities?

ANSWER: To ensure that the unit has an adequate supply of safe water and to monitor the water treatment processes performed in the unit area.

H. Water Sources. Introduce the student to the six sources of water.

NOTE: It is important to note that, although the selection of the water source is the responsibility of the Corps of Engineers, you may be called upon (in their absence) to assist in selecting a suitable site. Therefore, you must be familiar with the six sources of water and the factors you need to consider when selecting a water source.

1. Surface water. Surface water includes streams, ponds, rivers, and lakes.

2. Ground water. Ground water includes wells and springs.

3. Rainwater, ice, and snow. Rainwater is obtained by collecting it from the roofs of buildings or from other surfaces into containers. Water is obtained from ice or snow by collecting it then melting it over a heat source.

4. Sea water. Water obtained from oceans or saltwater lakes or seas cannot be used for human consumption until it has been distilled or demineralized to remove the salt.

NOTE: Rain, melted snow or ice, and sea water are only used in special instances when neither surface nor ground water is available. It should also be emphasized that water taken from any of the above six sources must be considered contaminated and, therefore, must be treated before use.

I. Factors to Consider When Selecting Water Source. Several factors must be taken into account when selecting a source for your unit's water in the field.

1. The unit's military situation.

2. The quantity of water needed.

3. The accessibility of the source.

4. The general quality of the source.

5. The type of purification equipment available for use.

QUESTION: What water source is generally selected for use in the field?

ANSWER: Surface water.

DISCUSSION: Although ground water is usually less polluted than surface water, surface water is the primary choice for water used in the field. This is due, in part, to its abundance, its relative accessibility, and the low cost of disinfecting it.

J. Water Treatment. The objective of water treatment is to produce potable water.

Methods of water treatment.

1. Coagulation and sedimentation to remove turbidity.

2. Filtration to remove the remaining turbidity and a large portion of the pathogenic organisms.

3. Disinfection to kill the pathogenic organisms that were not removed by sedimentation and filtration using chlorine compounds, iodine, or boiling of water.

4. Chlorine treatment. A relatively small quantity of chlorine and contact time of at least 30 minutes is required for satisfactory water disinfection.

(a) Under ordinary field conditions the chlorine residual required is 2 ppm at the point of production and distribution (for example, 400-gallon water trailer) and at least 1 ppm at the point of consumption (for example, 5-gallon containers and canteens).

(b) The sudden disappearance of all chlorine probably indicates recontamination of the water.

5. Calcium hypochlorite treatment.

6. Reverse osmosis water purification units (ROWPU).

(a) If ROWPU are used to produce the drinking water, then the water must be maintained at 2 ppm at the point of production (for example, the ROWPU storage tanks) and only 1 ppm at the point of distribution (for example, the 5000-gallon water tankers, 400-gallon water trailers and 5-gallon cans).

(b) The water must have a “trace” chlorine residual (.5 ppm to .1 ppm) at the point of consumption (for example, the canteen).

K. Safe Water Storage. Water for use in the field is generally stored in a 400-gallon water trailer, or water buffalo. Prior to filling the 400-gallon water trailer with water, it should be inspected for cleanliness and serviceability.

NOTE: Have the students refer to TB MED 577, page 7-3, Section IV, Preventive Medicine Inspection Criteria.

1. Container appearance.

(a) Interior surfaces of stainless steel and aluminum trailers.

(1) Interior seams should be free of rust. If rust is present, scrub the interior seams with a nonmetallic brush and a nonabrasive, nonchlorinated cleanser. Rinse the interior thoroughly after cleaning.

(2) Interiors should not be painted or coated with any material.

(3) Cracks and dents that expose the polyurethane foam insulation are not permitted for use and must be repaired.

(b) Interior surfaces of fiberglass tanks.

(1) Stains from natural impurities such as iron and magnesium are permitted.

(2) Stains resulting from rust or storage of unauthorized liquids are not authorized.

(3) Flaking of the interior surface paint may be a result of the use of an unapproved paint or improper subsurface preparation.

(4) Chips in the interior in excess of 10 percent of the lining prohibit the use of the trailer.

(5) Cracks are the most common interior surface deficiencies.

NOTE: Should deficiencies be noted in either tank type, the unit issuing the water trailer is responsible for correcting them prior to dispatching the water trailer for use.

(c) Exterior. POTABLE WATER ONLY must be stenciled on the exterior of the trailer in plain view.

QUESTION: What do you look for when performing a visual inspection of the interior of a stainless steel trailer?

ANSWER: Absence of paint, rust, cracks and dents.

2. Manhole cover.

(a) Manhole covers should seal effectively to prevent contamination.

(b) Rubber gaskets should be intact, without cracks and missing pieces. Ensure gaskets are free of excessive dry rot, and fit cover properly.

(c) Locking mechanism should be fully functional.

(d) Manhole cover should be free of rust on both the interior and exterior.

(e) Insulation on the inside cover should not be damaged.

(f) Pressure relief valve should operate effectively.

NOTE: Test the pressure relief valve by blowing into the bottom. If air escapes through the top, then the valve is working correctly.

3. Dispensing spigots.

(a) The T-handle that dispenses water to the spigots should open and close freely.

(b) Water should flow from the spigots when the T-handle is turned to the "open" position.

(c) The protective box covering the spigots should be intact.

(d) Locking devices for the spigots should be operational.

4. Drains.

(a) The drain plug should be easy to remove.

(b) Threads in the plug and drain hole should not be stripped or damaged.

(c) The drain plug should be installed hand tight only.

NOTE: Interior surface cracks around the drain hole indicate that excessive pressure was used to remove or install the plug. Remove thread corrosion at least semiannually.

5. Site conditions.

(a) If the residual meets the required standard, the water is safe to drink.

(b) If the residual does not meet the required standard, rechlorinate the water to the required level.

NOTE: Heat and sunlight will cause chlorine to evaporate and dissipate more rapidly. Therefore, check the chlorine residual periodically and rechlorinate as necessary.

L. Procedure for rechlorinating a full water 400-gallon trailer using ROWPU water.

1. Mix 1 MRE spoonful of calcium hypochlorite from the 6-ounce bottle, or use 4 ampules, (for 5 ppm, use 3 MRE spoonfuls or 22 ampules) with one-half canteen cup of water.

2. Thoroughly mix the slurry and then add it to the water in the trailer.

3. Mix the solution with a clean stick or other clean device and flush the four taps.

4. Wait 10 minutes, flush the taps again, and check the chlorine residual.

5. If the residual is 1 ppm or greater, wait an additional 20 minutes before releasing the water for consumption.

NOTE: If the residual is not 1 ppm, check the inside of the water buffalo for possible contamination (for example, large amounts of dirt, leaves, rust or other debris). If there is no sign of gross contamination, then add additional chlorine, but not a full MRE spoonful. Wait 10 minutes before testing the chlorine residual. Repeat this process until the chlorine residual reaches 1 ppm.

QUESTION: How much calcium hypochlorite is used to rechlorinate the 400-gallon water buffalo to a chlorine residual of 2 ppm?

ANSWER: 1 MRE spoonful or 4 hypochlorite ampules.

M. Procedure for rechlorinating a 5-gallon water can. Five-gallon containers filled from the 400-gallon water trailer must also maintain a chlorine residual of 1 ppm. This procedure is for a full 5 gallons of water. Using this procedure to rechlorinate less than 5 gallons of water may result in over chlorination.

1. Add 1 ampule to a 1/2 canteen cup of water and stir the slurry solution.

2. Add approximately 1/2 of the solution to one 5-gallon can of water.

3. Shake the container and wait 10 minutes. Loosen the can cap, invert the can to let some treated water flow over the threads of the can.

4. Wait an additional 20 minutes, for a total of 30 minutes of contact time prior to water consumption.

N. Procedure for rechlorinating a 1-quart canteen. In emergency cases, where no treated water is available, canteens of water can be disinfected using iodine tablets, calcium hypochlorite or Chlor-Floc®.

1. Rechlorination procedure using iodine tablets. Two iodine tablets must be used to disinfect a 1-quart canteen of water.

NOTE: Always inspect the iodine tablets prior to use. The tablets should be a uniform gray in color with a smooth even surface. Tablets that are yellowish brown or crumbling should be turned in and replaced with new tablets.

(a) Drop the tablets into the canteen filled with water and wait 5 minutes for tablets to dissolve.

(b) Cover the canteen and shake it.

(c) Loosen the canteen cap and invert the canteen to allow the treated water to flow across the threads of the canteen neck. This will kill any organisms growing there.

(d) Wait a minimum of 30 minutes to ensure all harmful organisms are killed prior to consumption of the water.

2. Rechlorination process using calcium hypochlorite.

(a) Dissolve the contents of 1 ampule in 1/2 canteen cup of water to make a slurry.

(b) Fill an NBC compatible canteen cap or 1/2 non-NBC compatible canteen cap with the slurry. Pour the cap contents into the canteen and wait 5 minutes for the slurry to fully dissolve.

(c) Cover the canteen and shake it.

(d) Loosen the canteen cap and invert the canteen to allow the treated water to flow across the threads of the canteen neck. This will kill any organisms growing there.

(e) Wait a minimum of 30 minutes to ensure all harmful organisms are killed prior to consuming the water.

NOTE: Sometimes, adding small amounts of chlorine to water can cause the water to taste and smell bad. If this happens, adding a little more chlorine to the water will usually correct this problem.

3. Rechlorination process using Chlor-Floc®. Rechlorinating with Chlor-Floc® is another method of treating water in a canteen. Follow the directions listed on the Chlor-Floc® package.

NOTE: Explain that this product requires a settling time. The treated water must also be strained before it can be consumed.

4. Disinfection process by boiling. In emergency situations without a means of rechlorination, water can be boiled to destroy harmful disease organisms.

NOTE: Emphasize that there is no chemical residual in boiled water, so the water can be easily recontaminated if not protected.

(a) Boil water at a rolling boil for 5 to 10 minutes to kill pathogenic organisms.

NOTE: In tactical situations where an open flame for minutes might mean attack or capture, boiling for as little as 15 seconds will kill most harmful organisms.

(b) After boiling, the water must be stored in a clean, closed container to prevent recontamination.

QUESTION: What two methods are used to rechlorinate the water in a 1-quart canteen?

ANSWER: Calcium hypochlorite and Chlor-Floc®.

DISCUSSION: Remember that after using Chlor-Floc®, that you need to let the water settle then strain it prior to its consumption.

O. Chlorine Residual Monitoring.

1. Components of the chlorination test kit.

(a) 100 calcium hypochlorite ampules.

(b) 150 DPD #1 test tablets.

(c) One plastic color comparator.

2. Procedure for monitoring the chlorine residual in water.

(a) Wash your hands.

(b) Flush the taps of 400-gallon water trailer for several seconds.

(c) Triple-rinse the sample section of the color comparator.

(d) Fill the comparator with water to the uppermost black border.

(e) Tear open a DPD #1 packet, (DO NOT TOUCH THE TABLET) and drop it into the comparator.

(f) Wait 1 minute.

(g) Place your thumb over the opening and invert the comparator 3 times to ensure that the DPD #1 tablet is completely dissolved.

(1) If the color of the water in the left window marked “2” is the same or darker shade of pink as the right window marked “2” then the residual is correct.

(2) If the color of the water is a lighter shade of pink, then more chlorine must be added to the water.

NOTE: When testing water with the DPD color comparator, make sure you monitor color changes in the water carefully. When the chlorine residual is above 10 ppm, the color of the water will change through all the colors in the test kit levels and then turn clear. Failure to carefully observe the color changes may lead to excessive chlorination of the water. This, in turn, may result in soldiers refusing to drink the water because of the strong chlorine taste.

P. Bottled Water Operations.

1. Bottled water is often used in current operations.

2. Bottled water must only come from approved sources through the normal supply chain.

3. Bottled water that is acquired from an approved source can still become contaminated in the field if not properly stored and protected.

4. Bottled water should be stored in a dry, cool environment out of direct sunlight.

5. Bottled water that is opened for personal consumption must still be protected against secondary contamination from humans or the environment.

Q. Ask for and answer any questions the students might have about the lesson material.

QUESTION: What is the biggest danger in using bottled water in the field?

ANSWER: Secondary contamination.

DISCUSSION: Bottled water is not chlorinated, as is field water and can become contaminated if not properly stored and protected. Sunlight can trigger biologic growth in the water, and exterior contaminants can seep into water bottles that become submerged due to flooding. Therefore, it is very important to protect bottled water from secondary contamination from humans or the environment.

III. SUMMARY (2 minutes).

A. Review of the Main Points.

1. General field water supply practices.

2. Field water sources.

3. Processes used to disinfect water.

4. Monitoring the chlorine residual in field water supplies.

B. Closing Statement. In all field situations, soldiers must be supplied with sufficient potable water to drink and to maintain personal hygiene. This requires the coordination efforts the AMEDD, Corps of Engineers, the Quartermaster Corps, the unit commanders, and the field sanitation team as well as the individual soldier.

LESSON 5—FOOD SERVICE SANITATION IN THE FIELD
(3 hours)

COURSES PRESENTED TO: Field Sanitation Team Members.

PLACE: Classroom.

REFERENCES:

FM 21-10, FIELD HYGIENE AND SANITATION, 21 June 2000.

FM 4-25.12, UNIT FIELD SANITATION TEAM.

TB MED 530, OCCUPATIONAL AND ENVIRONMENTAL HEALTH FOOD SERVICE SANITATION, 28 November 1991.

RELATED SOLDIERS MANUAL/MOS TASKS: None.

STUDY ASSIGNMENT: None.

STUDENT UNIFORM AND EQUIPMENT: Uniform of the day.

TOOLS, EQUIPMENT, AND MATERIALS: None.

PERSONNEL: One instructor.

INSTRUCTIONAL AIDS: Transparencies/PowerPoint presentation: computer with PowerPoint; computer monitor(s) or overhead projector.

TROOP REQUIREMENTS: None.

TRANSPORTATION REQUIREMENTS: None.

RISK ASSESSMENT: Low.

SAFETY REQUIREMENT: None.

METHODS OF INSTRUCTION: Conference, 3 hours.

I. INTRODUCTION (3 minutes).

A. Opening Statement. Provide a motivational opening appropriate to your student population such as the following. Failure to apply proper sanitary practices as they pertain to food service operations in the field can have a devastating impact on a unit's ability to accomplish its mission. Food handlers who are sick or who have poor personal hygiene habits can spread diseases and disease-causing microorganisms to the entire unit. The same potential exists when food service personnel fail to apply good food sanitation practices as they prepare, serve, transport and store food. As a member of the field sanitation team, you need to be able to provide advice and training to the members and leaders of your unit, and direct proper food sanitation practices in the field.

B. Objectives.

1. Terminal Learning Objective. Inform the students of the terminal learning objective for this lesson: Given classroom instruction, FM 21-10 and FM 4-25.12, direct food service sanitation in the field IAW FM 21-10 and FM 4-25.12.

2. Enabling Learning Objectives. Inform the students of the enabling learning objectives for this lesson.

(a) Describe sanitary practices in food handling.

(b) Describe measures taken to prevent foodborne illnesses as they pertain to food handlers, utensils, and food service facilities.

II. EXPLANATION (145 minutes).

A. Definitions. Provide the students with the following definitions.

1. Contamination.

2. Spoilage.

3. Potentially hazardous foods (PHF).

4. Temperature danger zone.

5. Cleaning.

6. Sanitizing.

7. Food-contact surface.

8. Cross-contamination.

9. Calibration.

QUESTION: What term is defined as a transfer of harmful microorganisms from one food item to another?

ANSWER: Cross-contamination.

QUESTION: What is the difference between cleaning and sanitizing?

ANSWER: When you clean something you physically remove the soil and food particles. When you sanitize something you actually reduce the number of microorganisms present by chemical or physical means.

NOTE: Continue to query the students on the definitions you discussed and ensure their understanding before you continue.

B. Foodborne Illness.

1. Using improper or unsanitary practices when dealing with food can cause it to become contaminated with disease-causing microorganisms resulting in an outbreak of foodborne disease. There are 5 bacteria that cause most of the reported foodborne illnesses.

(a) Campylobacter jejuni.

(b) Escherichia coli.

(c) Listeria monocytogenes.

(d) Salmonella.

(e) Staphylococcus.

NOTE: Inform the students that hygiene and sanitation standards for food service personnel are found in Chapter 3 of TB MED 530, Occupational and Environmental Health Food Service Sanitation.

2. Sources of food contamination. In the field, there are basically four sources of food contamination. It is important to remember that any food classified as a PHF furnishes a very good medium for harmful microorganisms to grow. Meats, dairy, and poultry are especially hazardous; as are many salads, chopped meats and sandwich fillings due to the special handling they require during preparation and the combination of potentially hazardous foods.

(a) Biological hazards.

(b) Chemical hazards.

(c) Physical hazards.

(d) Cross-contamination.

3. Unsafe food handling practices.

(a) Failure to refrigerate cold PHF or maintain them at temperatures below 40° Fahrenheit.

(b) Failure to maintain hot PHF at 140° Fahrenheit or above.

(c) Not protecting foods from contamination and or cross-contamination.

(d) Improper food transportation and storage practices.

(e) Improper procedures and practices of food handlers.

NOTE: Field Sanitation Team members do not have to memorize every standard and regulation, but need to be aware of factors that contribute to foodborne disease outbreaks. The best way to control these factors is through proper supervisory action.

QUESTION: Escherichia coli is an example of what?

ANSWER: A foodborne illness.

QUESTION: What is an example of a physical hazard that can contaminate food?

ANSWER: Foreign particles such as glass, metal shavings, bones, or insects.

QUESTION: State one example of an unsafe food handling practice that can result in foodborne disease.

ANSWER: Students are correct if they answer with any of the following: failure to refrigerate cold PHF or maintain them at temperatures below 40° Fahrenheit; failure to maintain hot PHF at 140° Fahrenheit or above; not protecting foods from contamination and/or cross-contamination; improper food transportation and storage practices; improper procedures and practices of food handlers.

NOTE: Query students for remaining unsafe food handling practices OR discuss remaining unsafe food handling practices to ensure understanding before moving on.

C. Sanitary Practices in Food Handling. The conditions present when food is prepared, stored, transported and served can have a direct bearing on the success or failure of a unit's mission.

1. Preparing food.

(a) Food service personnel need to plan meals that reduce the amount of food waste. In garrison, some foods may be kept as leftovers. In the field, potentially hazardous foods cannot be retained.

(b) As food service personnel prepare meals, they need to coordinate their work to avoid any unnecessary lapses of time between the preparation and serving of food.

(c) Potentially hazardous foods that can't be served promptly after being prepared should be placed immediately in a refrigerator.

(1) If the food cannot be served or refrigerated immediately after preparation, as in the case of box lunches, PHF should be avoided altogether.

(2) If there is no means to refrigerate food, MRE and heat-and-serve Unitized Group Rations (UGR) will be the only foods served.

(3) Once a UGR has been opened, it can not be kept as a leftover. If the tray has been heated but not opened, it can be kept and reheated one time. If it's reheated and still not used, it must be thrown away even if it hasn't been opened.

(d) Fresh fruit and vegetables need to be cleaned and disinfected.

(1) If food service disinfectant is not available, fruits and vegetables can be soaked in a 200 parts per million chlorine solution for thirty minutes, or they can be immersed in 160°F water for one minute.

NOTE: Prepare the chlorine solution by mixing one tablespoon of liquid bleach (sodium hypochlorite 3 to 5 percent) with one gallon of potable water.

(2) There are some fruits and berries, like strawberries, that cannot be properly washed or disinfected. Therefore, they should not be served or eaten raw outside of the US.

QUESTION: What should be done with UGR that have been reheated but not used?

ANSWER: It must be thrown away.

DISCUSSION: UGR that have been reheated but are not used must be thrown away, even if it has not been opened.

2. Storing food.

(a) Preventing food contamination.

(b) Safe product temperatures.

(c) Food storage chest.

(d) Semiperishable foods.

(e) Unwrapped food or food products can be stored in boxes but should be covered first to protect them from dust.

(f) Dry food items such as flour, sugar, coffee-creamer and rice should be kept in their original packaging.

(g) Acidic foods such as potato salad, tomato juice, lemonade or other citrus drinks must never be stored in galvanized containers.

QUESTION: How should dry food items be stored?

ANSWER: Wrapped in their own packaging.

DISCUSSION: Dry food items such as flour, sugar, coffee-creamer and rice should be kept in their original packaging. When transfer to other packaging is necessary, they should be placed in metal containers that have been lined with clean, disposable food-grade plastic liners. The lids should fit tightly and the containers should be protected from heat and moisture. Improper storage can result in product deterioration or infestation by insects and rodents.

3. Transporting food.

(a) Vehicles used for transporting food must be completely enclosed.

(b) Every unit should have clean tarps, boxes, or bags available to further protect food from contamination.

(c) Transporting potentially hazardous foods to troops away from the food service facility requires the use of insulated food containers.

(d) When transporting hot foods, insulated food containers will keep the foods at safe temperatures for three to four hours if properly preheated.

(1) Remove the inserts.

(2) Pour 2 quarts of boiling water into the container.

(3) Close the lid and let the container sit for 30 minutes.

(4) Pour out enough water to make room for inserts.

(5) Place the hot food into inserts.

(6) Return the inserts to the container.

(7) Tightly close and fasten the lid.

(8) Label the container with the common name of the food, the time it was packaged and the internal temperature of the food at the time it was packed.

NOTE: Follow the same steps using crushed ice or ice water instead of boiling water to prechill the container to transport cold food. When properly prechilled, cold food should remain at safe temperatures for three to four hours.

(e) Serving utensils that are sent with the container should be covered to prevent contamination.

(f) Disposable food service gloves should be provided.

4. Serving food. The condition of the dining facility and its staff can be primary sources of food contamination and disease.

QUESTION: For what period of time will a properly prechilled insulated food container keep cold foods cold?

ANSWER: Three to four hours.

(a) Purpose for inspection.

(1) First, to identify basic defects that could cause or spread communicable diseases.

(2) Second, to recommend corrective actions.

(3) Third, to give assistance to unit food service personnel in understanding the importance of effective sanitation practices.

(b) General procedure. Perform the following:

(1) Ensure that the unit is inspecting all food it receives at the time of delivery or pick-up.

(2) Conduct a brief visual inspection of the facility to ensure that all food sanitation principles and practices are being followed.

(3) Ensure that all prepared foods are being maintained at the proper temperatures.

(c) The NCOIC of the dining facility should check the facility for proper equipment prior to using it for food service.

(1) Ensure an adequate supply of food service gloves and aprons are on hand.

(2) There must be a handwashing device for the food handlers.

(d) The NCOIC of the dining facility must inspect the food handlers at the start of each shift, every day.

(1) The focus of this inspection should be to insure that all food handlers are practicing good personal hygiene and verify that they're not sick with a communicable illness.

(2) Camouflage paint, while essential to survival in combat, is not good for humans if eaten.

(3) Food service personnel who are sick should report to sick call and be returned to kitchen duty only when the medical authority determines they are fit.

(e) Regardless of the type of food you are storing, it may become contaminated even if it is packaged according to the guidelines we've discussed. Additional precautions are:

NOTE: When in doubt, contact the supporting veterinary services unit to make a determination on food quality.

(1) Keep food protected from the elements (sun, rain, freezing temperatures).

(2) If at all possible, avoid storing food in excessive heat or moisture.

(3) Carefully observe all expiration dates on foods. Be sure to dispose of food when the expiration date has passed.

QUESTION: When should the NCOIC inspect the food handlers/servers?

ANSWER: At the start of every shift, every day.

DISCUSSION: The focus of the inspection should be to ensure that all food handlers are practicing good personal hygiene and verify that they're not sick with a communicable illness.

QUESTION: When should the unit inspect the food it receives?

ANSWER: Immediately upon receipt.

QUESTION: For what three reasons do you perform an inspection of the food service facility?

ANSWER: To identify basic defects that could cause or spread communicable disease; to recommend corrective actions; to give assistance to food service personnel in understanding the importance of effective sanitation practices.

5. Cleaning and sanitizing utensils.

(a) Preferred method. Use this method whenever possible.

(1) Scrape off any excess food.

(2) Wash them in hot (120°F—150°F) soapy water.

(3) Rinse them in clear, boiling water.

(4) Sanitize them in another container of boiling water. If boiling water is not available, they can be sanitized in a chlorine solution.

(5) Allow the utensils to air dry.

(b) The mess kit laundry.

(1) The first can is a waste can for food scraps.

(2) The second is a wash can of soapy water heated to between 120°F and 150°F.

(3) The third can in the mess kit laundry contains clear, boiling water and is used to rinse the soap off the dishes.

(4) The fourth can also contains clear boiling water and is used for sanitizing.

NOTE: When it is impossible to heat the water, use a sanitizing solution in the fourth container. If possible, use food service disinfectant as specified on the label. Other alternatives are to mix three MRE spoonfuls of calcium hypochlorite powder for each ten gallons of water or one canteen cup of three to five percent liquid chlorine bleach for each 32 gallons of water.

(c) The Food Sanitation Center (FSC).

(1) The steps for using the FSC are exactly the same as those for using the mess kit laundry.

(2) The FSC is used with the modular field kitchen or the trailer-mounted field kitchen.

QUESTION: What is the purpose of the fourth can in the mess kit laundry and the fourth sink in the FSC?

ANSWER: To sanitize cooking and serving utensils.

QUESTION: What is contained in the fourth can or sink?

ANSWER: Clear boiling water OR a sanitizing solution.

DISCUSSION: When it is impossible to heat the water, use a sanitizing solution in the fourth container. If possible, use food service disinfectant as specified on the label. Other alternatives are to mix three MRE spoonfuls of calcium hypochlorite powder for each ten gallons of water or one canteen cup of three to five percent liquid chlorine bleach for each 32 gallons of water.

D. The Food Service Thermometer.

NOTE: Inform student that bimetallic dial thermometers are available and can be ordered from unit supply (NSN 6685-00-444-6500).

WARNING: Warn students that thermometers containing mercury can not be used and should never come in contact with food or food-contact surfaces.

1. Using the food service thermometer. Proper use of the thermometer ensures the most accurate reading.

(a) Wash your hands prior to handling the thermometer.

(b) Sanitize the thermometer with alcohol or a chlorine solution.

(c) Push the stem into the thickest part of the food, wait for the needle to stop moving.

(d) Note the reading.

2. Calibration of the food service thermometer.

(a) Ice point method.

(b) Boiling point method.

III SUMMARY (2 minutes).

A. Review of the Main Points.

1. Sanitary practices in food handling.

2. Measures taken to prevent foodborne illness.

3. The food service thermometer.

B. Closing Statement. As an FST member, your knowledge of food service sanitation principles and procedures will ensure that the soldiers in your unit are healthy and combat-ready. To do this, you must recognize proper food handling and storage procedures, as these are essential to the well-being of the soldier in the field. It is also important to remember that when you are called upon to inspect a field food service operation, your philosophy should be one of assistance. You are there to help the food service personnel understand the importance of applying good sanitation and hygiene practices and to inform them that following these simple rules can prevent the outbreak of foodborne illness.

LESSON 6—WASTE DISPOSAL IN THE FIELD
(3 hours)

COURSES PRESENTED TO: Field Sanitation Team Members

PLACE: Classroom.

REFERENCES:

FM 21-10, FIELD HYGIENE AND SANITATION, 21 June 2000.

FM 4-12.25, UNIT FIELD SANITATION TEAM.

RELATED SOLDIERS MANUAL/MOS TASKS: None.

STUDY ASSIGNMENT: None.

STUDENT UNIFORM AND EQUIPMENT: Uniform of the day.

TOOLS, EQUIPMENT, AND MATERIALS: None.

PERSONNEL: One instructor.

INSTRUCTIONAL AIDS:

TROOP REQUIREMENTS: None.

TRANSPORTATION REQUIREMENTS: None.

RISK ASSESSMENT: Low.

SAFETY REQUIREMENT: None.

METHODS OF INSTRUCTION: Conference, 3 hours.

I. INTRODUCTION (3 minutes).

A. Opening Statement. Provide a motivational opening appropriate to your student population such as the following. Directing waste disposal in the field is a very important task. It is one that has bearing on your many other duties, including the control of arthropods and rats in the unit area. Solid and liquid wastes produced under field conditions can amount to as much as a whopping one hundred pounds per soldier per day. You can well imagine how quickly one hundred pounds of waste per soldier per day, when not properly disposed of, can accumulate and become the breeding grounds for all types of pests. The unit commander is responsible for proper waste disposal in his unit area. However, he will be looking to

you, the field sanitation team member, to supervise the construction and operation of the necessary waste facilities.

B. Objectives.

1. Terminal Learning Objective. Inform the students of the terminal learning objective for this lesson: Given classroom instruction, FM 21-10 and FM 4-25.12, direct waste disposal in the field IAW FM 21-10 and FM 4-25.12.

2. Enabling Learning Objectives. Inform the students of the enabling learning objectives for this lesson.

(a) Select the best latrine for your unit's situation.

(b) Select the best liquid waste disposal method for your unit's situation.

(c) Select the best garbage and rubbish disposal method for your unit's situation.

II. EXPLANATION (145 minutes).

A. Waste Disposal in the Field. When we talk about waste disposal we need to look at three categories. Any of these, when not properly disposed of can become a breeding ground for disease-carrying insects and animals.

1. Human waste.

2. Liquid waste.

3. Rubbish.

B. Human Waste Disposal. Human waste disposal facilities are a must when talking about proper disposal of human waste in the field. There are two categories of human waste disposal facilities: latrines and urinals. The type of human waste disposal facility selected for use is dependent upon how long the unit will remain in one place. The primary human waste disposal type is chemical toilet. When chemical toilets are not available, improvised facilities are used. Usually, the longer the stay, the more sophisticated the facility. However, there are other considerations too, such as the tactical situation, weather and ground conditions, and local environmental laws.

WARNING: Army units MUST follow all local, state, federal, and international environmental standards during operations. This information is presented so units can develop their own waste disposal capabilities.

C. Latrines.

1. Planning considerations.

2. Location.

3. Privacy.

NOTE: In cold climates, you may consider heating the enclosure.

4. Handwashing devices.

5. Cleanliness.

QUESTION: What planning considerations must be taken into account when locating a latrine?

ANSWER: Latrines must be located at least 100 yards downwind of the unit's food service facility, at least 100 feet from the unit's ground water source, and at least 30 yards from the edge of the unit area.

QUESTION: How often should unit latrines be sanitized?

ANSWER: Daily.

6. Quantity.

7. Closure.

NOTE: Unit designations should only be included on the closure sign in nonoperational areas?

D. Types of Latrines.

1. Individual brief relief bags.

2. Chemical toilets.

3. Improvised latrines.

(a) Cat-hole.

(b) Straddle trench.

(c) Deep pit.

(d) Burn-out.

(e) Pail.

QUESTION: When is an individual brief relief bag or cat-hole latrine used?

ANSWER: When the unit is on the move.

QUESTION: How many straddle trench latrines are required for a unit with 75 male soldiers and 25 female soldiers?

ANSWER: Five. Each 4-foot trench accommodates 2 soldiers.

DISCUSSION: Each trench should be dug at least 2 feet apart. Separate facilities should be built for male and female soldiers.

QUESTION: How deep should a deep pit latrine be dug for a stay of 4 weeks?

ANSWER: Five feet.

DISCUSSION: The pit should be dug one foot in depth for every week the unit is in the field PLUS one foot for cover when it's time to close the latrine.

QUESTION: Which latrine is used when a chemical toilet is not available and environmental conditions make it impossible to dig, in heavily populated areas, or when the tactical situation prohibits burning?

ANSWER: The pail latrine.

E. Urinals (for use when chemical toilets are not available).

1. General guidelines for the urine soakage pit.

NOTE: If the latrine is located some distance from the sleeping area, a large can or pail may be placed at a convenient spot to be used as a urinal during the night. In the morning, empty the can into the urine disposal facility and wash it with soap and water before reusing it.

2. Urine soakage pit construction.

3. Pipe urinals.

4. Urine troughs.

QUESTION: What three devices are used for urine disposal?

ANSWER: Soakage pit, pipe urinal, and urine trough.

F. Liquid Waste Disposal.

1. There are two main types of grease traps commonly used in the field. They are the baffle grease trap and the barrel filter grease trap.

(a) Baffle grease trap. The baffle grease trap is the most effective way to remove grease from kitchen waste. It is constructed from a barrel or a watertight box.

(1) Inside the barrel or box is a wooden baffle that divides it into two chambers.

(2) To begin, both chambers must be filled with cool water.

(b) Barrel filter grease trap.

(1) The barrel filter grease trap must be positioned in one of two ways for it to be effective. One is to place trap directly over the soakage pit. The other is to place the barrel on a platform with a trough that leads to the pit.

(2) Like all of our field sanitation devices, the barrel filter grease trap requires some maintenance to operate efficiently.

QUESTION: What device do all liquid waste disposal devices have in common?

ANSWER: Grease trap.

QUESTION: Where should the barrel filter grease trap be placed for maximum effectiveness?

ANSWER: Directly over the soakage pit OR on a platform with a trough that leads to the soakage pit.

2. Soakage pits.

To close a soakage pit you should first mound it over with one foot of compacted soil. The compacted soil will keep insects and vermin from entering and exiting the pit. Then post a sign on the mound that states the type of pit and the date it was closed.

3. Soakage trenches.

(a) To construct a soakage trench dig a pit two feet square and one foot deep. One-foot wide trenches are then dug, radiating outward from the pit in each direction. These trenches vary in depth from one foot at the pit to one and a half feet at the outer edges. Line the bottom with the same nonporous material as the soakage pit.

(b) Remember that you will need two soakage trenches for every two hundred persons and each one would require a grease trap.

4. Evaporation beds.

(a) To begin, scrape the topsoil from the area and mound it around to form the outside edges of the bed. Then, with a spade, turn the dirt over within the bed to a depth of between 10 and fifteen inches. With a rake, mound the loosened dirt into a series of horizontal or vertical ridges that are approximately six inches high. These ridges will help to distribute the water evenly within the bed.

(b) Evaporation beds actually operate on a process of evaporation, percolation and oxidation. To operate the bed, simply flood the bed with liquid waste until the wastewater is close to the top of the ridges within the bed. In other words, flood the bed to a depth of approximately six inches. The liquid should be allowed too sufficiently dry to permit respading and reforming on the mounds. While this is happening, other beds are flooded on successive days and the same sequence of events is followed. It is important to give special attention to the proper rotation, maintenance, and usage of these beds. If these beds are used properly, they create no insect hazard and only a slight odor.

QUESTION: What are the dimensions of a soakage pit?

ANSWER: Four feet by four feet.

QUESTION: What environmental conditions are best suited to the use of an evaporation bed?

ANSWER: Hot, dry climates where the soil is heavy clay.

G. The third type of waste disposal you'll need to concern yourself with is the disposal of garbage and rubbish.

1. Garbage refers to the food waste that occurs during food preparation, cooking and serving. Garbage is classified as either dry or wet.

2. Rubbish is the nonfood waste that usually comes from kitchens. Rubbish is classified as either combustible or noncombustible.

QUESTION: Have the students classify the following items as either garbage or rubbish: Empty food cans, cheese, milk, paper towels, bread, empty bottles, empty food boxes, orange juice.

ANSWER: Empty food cans (rubbish), cheese (garbage), milk (garbage), paper towels (rubbish), bread (garbage), empty bottles (rubbish), empty food boxes (rubbish), orange juice (garbage).

QUESTION: Have the students classify the same items as either wet or dry garbage and combustible and noncombustible rubbish.

ANSWER: Empty food cans (noncombustible rubbish), cheese (dry garbage), milk (wet garbage), paper towels (combustible rubbish), bread (dry garbage), empty bottles (noncombustible rubbish), empty food boxes (combustible rubbish), orange juice (wet garbage).

(a) Burial method.

NOTE: When using either method, be sure to compact the rubbish before disposing of it. Doing so will help to prevent infestation by insects and rodents.

(1) Burial pits.

(a) Operational considerations.

NOTE: Compacting the earth is very important. Doing so prevents flies and rodents from entering or exiting the pit.

(b) Placement of the pit.

(2) Continuous trenches.

(a) Operational considerations.

(b) Placement of the trench.

QUESTION: When would you use a burial pit?

ANSWER: When the unit is on the move.

QUESTION: What are the proper dimensions for the continuous trench?

ANSWER: Dimensions for the continuous trench are two feet wide and four feet deep. The length will vary depending upon the length of time the trench is in use.

3. Incineration method.

NOTE: Although a significant amount of time is spent discussing incineration and the various types of incinerators, students should be aware that burial is almost always the best method for disposing of garbage and rubbish. Therefore, burial should be used whenever possible.

(a) Remove noncombustible rubbish.

(b) Remove wet garbage.

(1) Pour the liquids through a grease trap and into the soakage pit.

(2) Incinerate the solids remaining in the strainer.

(c) Barrel incinerator.

(1) Punch several holes near the bottom of the barrel and insert grates inside the barrel, several inches above the holes.

(2) Support the barrel above the ground using stones, bricks, or dirt-filled cans. Be sure to leave enough space underneath it to allow a fire to be built.

(3) Put the combustible rubbish on the top grate and ignite it.

(d) Cross trench and stack incinerator.

(1) Construct two trenches that cross at right angles.

(2) Build a grate from scrap iron and lay it over the intersection of the trenches.

(3) Create a stack from an old drum with both ends removed OR with one end removed and holes drilled liberally in the other end to emit air.

(4) Build a fire on top of the grate.

(e) Inclined plane incinerator.

(1) Telescope two 55-gallon drums with both ends removed.

(2) Insert a sheet metal plane through the telescoped drums. Make sure the plane extends two feet beyond the upper end of the drum. This will serve as your loading platform.

(3) Position the drums, with the plane in place, on an inclined surface.

(4) Put a grate at the lower end of the drums. The fire should be started under the grate. Either a wood or fuel oil fire is okay.

(5) When the incinerator is hot, place the garbage on the loading platform. As the garbage becomes dry, push it through the drums in small amounts. Final burning takes place on the grate.

QUESTION: Which incinerator would you pick for the disposal of garbage for a company-sized unit?

ANSWER: The inclined plane incinerator.

QUESTION: Which incinerator should not be used to dispose of wet garbage?

ANSWER: Barrel incinerator.

QUESTION: What needs to be removed from the field waste before it can be incinerated?

ANSWER: Noncombustible rubbish and the liquid from the wet garbage.

III. SUMMARY (2 minutes).

A. Review of the Main Points.

1. Choosing the best latrine for your unit's situation.

2. Choosing the best liquid waste disposal method for your unit's situation.

3. Choosing the best garbage and rubbish disposal method for your unit's situation.

B. Closing Statement. Proper waste disposal in the field is essential in the prevention of the spread of disease. Solid and liquid wastes produced under field conditions can be as much as one hundred pounds per soldier per day. The unit commander is responsible for proper waste disposal in his unit area. However, he will be looking to you, the field sanitation team member, to supervise the construction and operation of the necessary waste facilities. Directing waste disposal in the field is a very important task. It is one that has direct bearing on your many other duties, including the control of arthropods and rats in the unit area. You can well imagine how quickly one hundred pounds of waste per person per day, when not properly disposed of, can accumulate and become the breeding ground for all types of pests.

LESSON 7—ARTHROPODS AND DISEASE
(2 hours)

COURSES PRESENTED TO: Field Sanitation Team Members.

PLACE: Classroom.

REFERENCES:

FM 21-10, FIELD HYGIENE AND SANITATION, 21 June 2000.

FM 4-25.12, UNIT FIELD SANITATION TEAM.

RELATED SOLDIERS MANUAL/MOS TASKS: None.

STUDY ASSIGNMENT: None.

STUDENT UNIFORM AND EQUIPMENT: Uniform of the day.

TOOLS, EQUIPMENT, AND MATERIALS: None.

PERSONNEL: One instructor.

INSTRUCTIONAL AIDS: None.

TROOP REQUIREMENTS: None.

TRANSPORTATION REQUIREMENTS: None.

RISK ASSESSMENT: Low.

SAFETY REQUIREMENT: None.

METHODS OF INSTRUCTION: Conference, 2 hours.

I. INTRODUCTION (3 minutes).

A. Opening Statement. Provide a motivational opening appropriate to your student population such as the following. You may ask yourself why the Army, with all of its high-tech weapons systems, concerns itself with something as small as a mosquito or a spider. The reason is that history is full of examples of armies that were decimated by arthropodborne disease. In fact, worldwide, one out of every seventeen people die from malaria—a disease passed on by mosquitos. Think about that number for a minute. That means that if your unit deploys to a malaria-prone area, they will be at very high risk unless they take the necessary precautions. It's up to you to make sure the soldiers in your unit are aware of and realize the medical threat and to train your soldiers in the proper precautionary measures to protect themselves both in peacetime and wartime operations.

B. Objectives.

1. Terminal Learning Objective. Inform the students of the terminal learning objective for this lesson: Given classroom instruction, FM 21-10 and FM 4-25.12, communicate the impact of arthropods on military operations IAW FM 21-10 and FM 4-25.12.

2. Enabling Learning Objectives. Inform the students of the enabling learning objectives for this lesson.

(a) Identify the six arthropods important to military operations.

(b) Identify the ways arthropods affect human health.

(c) Name the arthropodborne diseases and their vectors.

(d) Select the habitats for each of the six arthropods important to military operations.

II. EXPLANATION (115 minutes).

A. Definitions. Present the students with the following definitions.

1. Arthropods.

2. Vector.

B. Arthropods Important to Military Operations.

1. Mosquitos.

(a) Life cycle.

(b) Habitat.

2. Filth flies.

   (a) Life cycle.

   (b) Habitat.

QUESTION: In what type of habitat would you expect to find mosquitos?

ANSWER: Areas of standing water.

QUESTION: What is the average life span of the filth fly?

ANSWER: About six weeks.

3. Fleas.

   (a) Life cycle.

   (b) Habitat.

4. Lice.

   (a) Life cycle.

   (b) Habitat.

QUESTION: How many stages are there in the life cycle of the louse? What are they?

ANSWER: Three—egg, nymph, and adult.

QUESTION: In what habitat would you expect to find the flea?

ANSWER: Although humans carry fleas, large populations of fleas can usually be found around animal beds, burrows, and nests.

5. Cockroaches.

   (a) Life cycle.

   (b) Habitat.

6. Ticks and mites.

   (a) Life cycle.

   (b) Habitat.

QUESTION: What three criteria does the habitat of the cockroach usually have?

ANSWER: Water; shelter, such as cracks or crevices; and food, such as garbage or spillage.

QUESTION: In what habitat will you find ticks and mites?

ANSWER: Ticks and mites are generally found in areas of tall grass or underbrush in close proximity to mammal resting places and watering holes.

C. How Arthropods Affect Human Health. Now that you know the six arthropods most important to military operations, let's take a look at how they affect human health.

1. Direct injury.

(a) Bites.

(b) Envenomation.

(c) Entomophobia.

NOTE: While this condition is not usually prevalent among soldiers, it can occur so it needs to be mentioned.

(d) Accidental injury.

(e) Myiasis.

(f) Allergies.

QUESTION: Name three examples of direct injury.

ANSWER: Students are correct if they answer with any two of the following: bites, envenomization, entomophobia, accidental injury, myiasis, or allergies.

NOTE: Repeat the question until all forms of direct injury have been discussed OR present the remaining forms of direct injury before moving on to the next question.

QUESTION: What form of direct injury may also be used as a medical procedure?

ANSWER: Myiasis.

DISCUSSION: In some cases, fly larvae are put intentionally on a wound to feed on the dead tissue and promote the growth of new, healthy tissue.

D. How Disease is Spread.

1. Passive or mechanical transmission.

(a) Example 1. Filth flies carry bacteria or other disease-causing organisms on their mouthparts and feet from infected human feces.

(b) Example 2. Cockroaches provide a similar "taxi service" by carrying disease organisms on their legs, feet, and mouthparts.

2. Active or biological transmission. In this method of transmission the disease-causing agent undergoes some change in the body of the arthropod.

(a) Inoculation.

(b) Regurgitation.

NOTE: The bacteria that causes bubonic plague multiplies rapidly in the flea's gut and blocks it like stopping up a drain. When the flea attempts to eat, it can not ingest the host's blood due to the blockage. The flea ends up regurgitating the bacteria into the host.

(c) Fecal contamination.

NOTE: The kissing bug bites the host causing a wound. It then takes a few steps forward and defecates into the wound.

(d) Crushing the vector.

NOTE: The bacteria that cause epidemic typhus live and multiply in the body of the body louse.

E. Arthropodborne Diseases and Their Vectors. There are several arthropodborne illnesses that are significant to military operations. Now that you are familiar with how diseases are spread, we'll look at some of the diseases that are most significant to Army operations.

1. Malaria.

2. Yellow fever.

3. Dengue fever.

NOTE: This disease is characterized by fever, headache, extreme pain in the joints and muscles, and a rash.

4. Encephalitis.

NOTE: Symptoms of this disease may include headache, fever, and extreme drowsiness. The disease may leave lasting effects such as deafness, epilepsy, or an altered mental capacity, known as dementia.

5. Sandfly fever.

6. Leishmaniasis.

7. Epidemic typhus.

8. Bubonic plague.

QUESTION: What are the two methods of disease transmission?

ANSWER: Passive and active OR mechanical and biological.

QUESTION: Name the four diseases transmitted by the mosquito.

ANSWER: Malaria, yellow fever, dengue fever, and encephalitis.

QUESTION: What arthropods are responsible for the spread of epidemic typhus?

ANSWER: The body louse.

QUESTION: What disease is transmitted to humans by the rat flea?

ANSWER: Bubonic plague.

DISCUSSION: Any one of the arthropods that are parasitic to the rodent may spread bubonic plague, but the most important is the rat flea.

III. SUMMARY (2 minutes).

A. Review of the Main Points.

1. The six arthropods important to military operations.

2. The ways arthropods affect human health.

3. The arthropodborne diseases and their vectors.

4. The habitats for each of the six arthropods important to military operations.

B. Closing Statement. As you have learned, arthropods can affect a soldier's health in many ways. Many people have the tendency to overlook the impact that arthropods can have on military operations, even though history is full of examples in which their impact can be devastating. An important part of your job is to inform your unit about the impact that arthropods can have on military operations and the ways in which unnecessary exposure to them can be avoided.

LESSON 8—MANAGEMENT OF ARTHROPODS THROUGH INDIVIDUAL PREVENTIVE MEDICINE MEASURES (2 HOURS)

COURSES PRESENTED TO: Field Sanitation Team Members.

PLACE: Classroom.

REFERENCES:

FM 21-10, FIELD HYGIENE AND SANITATION, 21 June 2000.

FM 4-25.12, UNIT FIELD SANITATION TEAM.

RELATED SOLDIERS MANUAL/MOS TASKS: None.

STUDY ASSIGNMENT: None.

STUDENT UNIFORM AND EQUIPMENT: Uniform of the day.

TOOLS, EQUIPMENT, AND MATERIALS: None.

PERSONNEL: One instructor.

INSTRUCTIONAL AIDS: None.

TROOP REQUIREMENTS: None.

TRANSPORTATION REQUIREMENTS: None.

RISK ASSESSMENT: Low.

SAFETY REQUIREMENT: None.

METHODS OF INSTRUCTION: Conference, 2 hours.

I. INTRODUCTION (3 minutes).

A. Opening Statement: Provide a motivational opening appropriate to your student population such as the following. Manpower is the Army's most valuable asset. Everything possible must be done to conserve this asset. During recent wars, more deaths and illnesses have resulted from disease than from enemy action. Throughout the world, diseases carried by mosquitos, ticks, lice, and other arthropods threaten soldiers' health and combat effectiveness. Use of the Department of Defense, or DOD, Arthropod Repellent System is just one of the preventative systems in place that can help reduce or eliminate arthropodborne disease in the field.

B. Objectives.

1. Terminal Learning Objective: Inform the students of the terminal learning objective for this lesson: Given classroom instruction, FM 21-10 and FM 4-25.12, direct the use of the DOD arthropods repellent system IAW FM 21-10 and FM 4-25.12.

2. Enabling Learning Objectives: Inform the students of the enabling learning objectives for this lesson.

(a) Identify the components of the DOD Arthropod Repellent System.

(b) Select, in order, the steps required to treat uniforms using the IDAA kit.

(c) Recognize the correct procedure to treat uniforms using the 0.5 percent aerosol can method.

(d) Recognize the correct procedure to treat uniforms using the 2-gallon sprayer.

(e) Recognize the correct procedure to treat skin using DEET.

(f) Recognize proper wear of the uniform in the field setting.

(g) Identify the measures taken to protect "at risk" soldiers from arthropodborne illness.

II. EXPLANATION (85 minutes).

NOTE: Inform students that the DOD arthropod repellent system is made up of three separate components; permethrin on the uniform, DEET on the skin, and the proper wear of the BDU. When used in conjunction with one another these components provide excellent protection against a wide variety of arthropods and arthropodborne diseases.

A. First Component: permethrin on the uniform.

1. Individual Dynamic Absorption Application (IDAA) kit.

(a) The IDDA kit contains enough material to treat one BDU.

(b) The procedures for treating the BDU jacket.

(1) Step 1. Lay the jacket flat and fold the sleeves across the front.

(2) Step 2. Pour $^{3}/_{4}$ canteen cup of clean water into the plastic bag marked with an A.

(3) Step 3. Put on the disposable plastic gloves and empty the contents of one bottle of permethrin into the bag, drop the empty bottle and cap into the bag, and gently shake mix.

(4) Step 4. Place the rolled jacket into the bag and zip lock.

(5) Step 5. Gently shake the bag twice and then let it rest for at least three hours.

(c) The procedures for treating the BDU trousers. These instructions can be found on the back of the bag marked B.

(1) Step 1. Lay the trousers flat. Fold them leg to leg then roll them tightly. Tie the roll in the middle with the string provided in the kit.

(2) Step 2. Pour $^{3}/_{4}$ canteen cup of water into the bag marked with a B.

(3) Step 3. Put on the disposable plastic gloves and empty the contents of one bottle of permethrin into the bag, gently drop the empty bottle and cap into the bag, and gently shake the mix.

(4) Step 4. Put the BDU trousers into the bag and zip lock.

(5) Step 5. Gently shake the bag twice and then let it rest for at least three hours.

(d) When the three hours have passed, put on the disposable plastic gloves and remove the jacket and trousers from the plastic bags. The BDU should then be hung in the shade for an additional three hours until it has had time to dry. Finally, consolidate all kit materials into one plastic bag and dispose of them in accordance with your unit's SOP.

NOTE: Hanging the uniform in the sunlight will decrease the effectiveness of the permethrin. Machine dryers, when available, may also be used to dry the uniform.

(e) Mark the inside of the uniform Permethrin Treated and the date. This method of treatment is good for the life of the uniform, however, it should be replaced if the uniform is ever dry cleaned.

QUESTION: Look at the steps for treating your uniform using the IDAA kit. What is their proper order?

ANSWER: B, D, C, E, and A.

How long should the trousers be allowed to soak in the permethrin?

ANSWER: Three hours.

QUESTION: Where can you find the instructions for treating the BDU jacket?

ANSWER: On the plastic bag marked with an A.

2. Aerosol can (0.5 percent). This method can treat one uniform and is effective for up to six weeks or six launderings. These instructions can be found on the label on the back of the can.

(a) Select a site outside that is protected from the wind.

(b) Place the BDU flat on the ground.

(c) Shake the can well before spraying.

(d) Hang the uniform and bed net in the shade for three hours or until dry.

QUESTION: How long is the 0.5 percent aerosol can treatment effective?

ANSWER: Six weeks or six launderings.

3. Applying permethrin using the 2-gallon sprayer.

(a) After you gather the safety equipment, lay the uniform flat on the ground in an area protected from the wind.

(b) Put on the gloves, goggles, and respirator.

(c) Add one gallon of clean water to the sprayer tank. Holding the permethrin bottle away from you, open it and empty the contents into the tank. Add the second gallon of clean water.

(d) Close the sprayer.

(e) Using a fan nozzle, spray the uniforms from about twelve to eighteen inches away.

(f) Hang the uniform in the shade for about three hours, or until dry.

QUESTION: Why is using the 2-gallon sprayer the least preferred method of treating the BDU?

ANSWER: It is time intensive and it requires trained personnel to operate the sprayer.

QUESTION: What safety equipment is required by the person operating the sprayer?

ANSWER: Gloves, goggles, and a properly fitted respirator.

(g) The 2-gallon sprayer can also be used to treat bed nets and tentage.

(1) To treat the bed net, spray both sides then allow the netting to dry completely. Re-treat it every six months or six launderings.

(2) To treat tentage and liners, treat the entryways, inside surface, ceiling, walls, and floor.

B. Second Component: DEET on the skin. DEET repels mosquitos, biting flies, chiggers, deer flies, fleas, and stable flies. In tropical areas DEET repels terrestrial leeches. DEET is preferred over

commercial products because the long-term effects of commercial products on your health have not been evaluated. In addition, when compared to commercial products, DEET was found to be more effective.

NOTE: Before using a commercial insect repellent, be sure to check with preventive medicine personnel.

1. Squeeze 2.5 milliliters of DEET into the palm of your hand.

2. Rub your hands together lightly, then apply a thin layer over your forearms, face, neck and ears. Be sure to apply DEET to ALL exposed skin.

NOTE: Be sure to apply DEET repellent to your skin before putting on your camouflage grease paint.

3. Wash your hands after applying DEET to avoid accidental contact with eyes or other sensitive areas.

NOTE: DEET is effective for up to twelve hours under normal training conditions. If training or deployed in a warm, humid climate where you might sweat a lot, you should reapply DEET more often to ensure proper protection. This also applies if you are working or training in the rain.

QUESTION: How far under the hemline of your uniform should DEET be applied?

ANSWER: Be sure to apply DEET two to three inches underneath the edges of your uniform for best protection.

QUESTION: Where should DEET be applied?

ANSWER: To all exposed skin: forearms, face, neck, and ears.

C. Third Component: proper wear of BDU.

1. Regardless of the season, during tactical field training exercises and deployment sleeves should be worn down and buttoned at wrist. Keep every button on the BDU jacket buttoned.

(a) Wearing your sleeves down and keeping the button buttoned protects you from insect bites and poisonous plants.

(b) Wearing your sleeves down protects you from the harmful effects of the sun.

NOTE: DEET can not be applied to skin that is irritated or infected as a result of sunburn thus increasing your vulnerability to insects.

2. The T-shirt should be worn tucked into your BDU trousers at all times.

NOTE: If your situation requires tactical low crawling or lying on the ground in a defensive posture, you should apply a thin layer of DEET to your abdomen around your belt line to further protect you from insects.

3. Keep the BDU trousers bloused loosely inside your boots.

4. The BDU should fit loosely and should not be starched.

(a) Tight uniforms make it easier for biting insects to reach your skin.

(b) Tight uniforms decrease the body's ability to cool itself.

(c) Starch keeps the fabric from "breathing."

5. When required, wear a head net to protect your face and neck from biting insects.

NOTE: Local command policy and medical intelligence reports will dictate the need for head nets.

QUESTION: What deficiencies can you see in the wear of the uniform on the soldier on the right?

ANSWER: No BDU jacket, T-shirt not tucked in.

D. Protecting Soldiers "At Risk."

1. If possible, billets should be screened.

2. Use bed nets treated with permethrin while at rest.

NOTE: Inspect bed nets periodically for rips and tears. Repair small rips with a sewing kit. Bed nets with large rips should be turned in to your supply section for replacement.

3. Apply DEET to all exposed skin.

(a) DEET should be applied to the areas of the skin that may come in contact with the insect netting while resting in your cot.

(b) DEET should be applied to all areas of exposed skin when not in uniform, even if you are running a quick errand or placing a quick phone call.

(c) Reapply DEET more often if you are participating in an activity that causes you to get wet or sweat.

NOTE: The highest incidence of arthropodborne illness occurs when soldiers are not in their BDU.

4. Avoid areas where high populations of insects are prevalent.

QUESTION: What measures can be taken to decrease a soldier's risk of arthropodborne illness while at rest or play.

ANSWER: When possible, billets should be screened; use bed nets treated with permethrin while at rest; avoid areas of high populations of insects; apply DEET to all exposed skin.

III. SUMMARY (2 minutes).

A. Review of the Main Points.

1. The components of the DOD Arthropod Repellent System.

2. The steps required to treat uniforms using the IDAA kit.

3. The correct procedure to treat your uniform using the 0.5 percent aerosol can.

4. The correct procedure to treat uniforms using the 2-gallon sprayer.

5. The correct procedure to treat your skin using DEET.

6. The proper wear of the uniform in the field setting.

7. The measures taken to protect "at risk" soldiers from arthropodborne illness.

B. Closing Statement. Remember that manpower is the Army's most valuable asset. During this lesson you learned about the DOD Arthropod Repellent System—a system that the Army has in place to protect this asset. Knowing the components of this system and implementing the procedures to use these products are the first steps in the management of arthropods through individual PMM.

LESSON 9—MANAGEMENT OF ARTHROPODS THROUGH NONCHEMICAL (SANITATION) AND CHEMICAL PRACTICES
(3 hours)

COURSES PRESENTED TO: Field Sanitation Team Members.

PLACE: Classroom.

REFERENCES:

FM 21-10, FIELD HYGIENE AND SANITATION, 21 June 2000.

FM 4-25.12, UNIT FIELD SANITATION TEAM.

RELATED SOLDIERS MANUAL/MOS TASKS: None.

STUDY ASSIGNMENT: None.

STUDENT UNIFORM AND EQUIPMENT: Uniform of the day.

TOOLS, EQUIPMENT, AND MATERIALS: 2-gallon sprayer and one set of replacement parts needed for the demonstration.

PERSONNEL: One instructor.

INSTRUCTIONAL AIDS: None.

TROOP REQUIREMENTS: None.

TRANSPORTATION REQUIREMENTS: None.

RISK ASSESSMENT: Low.

SAFETY REQUIREMENT: None.

METHODS OF INSTRUCTION: Conference/demonstration, 3 hours.

INTRODUCTION (3 minutes).

A. Opening Statement: Provide a motivational opening appropriate to your student population such as the following. In many of our lessons we have talked about the importance of good sanitation and personal hygiene practices and how they help control the spread of disease. You've been introduced to the arthropods that are important to the military. You are also familiar with the individual preventive medicine measures soldiers can take to protect themselves from them. Now, let's look at some of the measures that can be taken at the unit level to control arthropods and help prevent the spread of arthropodborne illness.

B. Objectives.

1. Terminal Learning Objective. Inform the students of the terminal learning objective for this lesson: Given classroom instruction, FM 21-10 and FM 4-25.12, direct the use of nonchemical and chemical processes to control arthropods IAW FM 21-10 and FM 4-25.12.

2. Enabling Learning Objectives. Inform the students of the enabling learning objectives for this lesson.

(a) Identify nonchemical (sanitation) methods of controlling arthropods.

(b) Identify properties of pesticides.

(c) Identify the factors to consider when assessing the risk associated with the use of pesticides.

(d) Identify safety precautions associated with the use of pesticides.

(e) Describe disposal methods for pesticides and their containers.

(f) Select, in order, the steps required to prepare the 2-gallon sprayer for use.

(g) Select, in order, the steps required to operate the 2-gallon sprayer.

(h) List the measures taken to maintain the 2-gallon sprayer.

II. EXPLANATION (135 minutes).

A. Sanitation Practices. Many people feel on a large scale, such as the unit level, that the best way to control bugs is to hose them down with chemical pesticides. Unfortunately, this is often done without considering what caused the problem in the first place; improper sanitation practices. Consider a pile of opened garbage. You can spray and spray, but unless you eliminate this breeding ground for flies, you're still going to have a problem. Let's look, now, at some ways we can manage arthropods using good sanitation practices instead of chemicals.

1. Eliminate arthropod habitats.

QUESTION: What habitat must be eliminated to control mosquitos?

ANSWER: Areas of standing water such as fighting positions that are no longer being used; containers that hold water such as old cans or tires; ruts in the unit area.

QUESTION: Eliminating areas of tall grass and weeds can help to control what arthropod(s)?

ANSWER: Ticks and mites.

QUESTION: What arthropod would you expect to find in crowded, unsanitary conditions?

ANSWER: Lice.

QUESTION: What three things, when present together, attract cockroaches?

ANSWER: Shelter, such as cracks or crevices; water, and food.

2. Control rodents in the unit area.

3. Use proper waste disposal procedures.

(a) Garbage containers should be tightly covered and the garbage should be disposed of in approved sites.

(b) Latrine facilities should be properly constructed and fly-proofed.

(c) Garbage and waste disposal devices should be filled in and properly closed out when full or abandoned.

(d) Keep kitchen and food service facilities clean and free of debris that would provide food, water, and shelter.

4. Avoid animal nesting areas.

B. Chemical Practices. There will more than likely be a time when even the best sanitation efforts fall short of controlling arthropods in your unit area. When this is the case, you can augment your efforts with the use of pesticides. AUGMENT is the operative word here—chemicals are not meant to take the place of the individual or unit-level preventive medicine measures we have discussed.

1. Properties of pesticides.

(a) Pesticides are toxic.

(b) Pesticides and solvents.

(c) Pesticide absorption into the skin.

WARNING: Because of their toxic properties, all pesticides should be considered potentially hazardous. You can find the hazard and risk information on the pesticide label. ALWAYS read the label instructions for use, protective clothing requirements, and safety precautions prior to using a pesticide. In all cases, THE LABEL IS THE LAW.

QUESTION: Name two sanitation measures you can take to control arthropods in your unit area.

ANSWER: Eliminate arthropod habitats, control rodents, dispose of all waste properly, and avoid animal nesting/feeding areas.

QUESTION: How should chemical practices to control arthropods be used?

ANSWER: In conjunction with good sanitation practices.

DISCUSSION: Chemical practices should never replace good sanitation practices. Instead, a chemical routine should be used to augment good sanitation practices.

2. Estimate the hazard.

(a) What are the toxic effects if the pesticide is accidentally inhaled or ingested?

(b) What is the concentration of the toxic substance I will be handling while mixing the pesticide? While applying it?

(c) How much pesticide needs to be applied in order to achieve the desired results?

(d) How often do I need to apply the pesticide?

(e) What environmental conditions exist at the time of application? Am I indoors or outdoors? Is there proper ventilation? Is there a breeze? What temperature is best and safest for the application of this chemical?

NOTE: It is important to remember that the hazard for any pesticide is negligible, as long as you use it correctly.

3. Safety precautions.

(a) Pesticides should not be stored or used near an open flame.

(b) Do not mix pesticides.

(c) Dispose of any unused pesticide properly.

(1) The easiest way to dispose of pesticides is to avoid having any to dispose of.

(2) When a pesticide cannot be used for its intended purpose or when a pesticide is no longer authorized for use, any unused quantity should be returned to the manufacturer through the Defense Marketing and Utilization Office (DRMO).

(d) Dispose of the empty pesticide container properly.

(1) First, fill the pesticide container with water.

(2) Pour the rinse water into the 2-gallon sprayer along with the water used to dilute the pesticide being applied.

(3) Repeat steps 1 and 2 two more times.

QUESTION: These questions are all questions you should ask yourself in order to determine what information?

ANSWER: The estimated hazard of a pesticide.

4. Using the 2-gallon sprayer.

(a) Sprayer components.

(1) Instruction manual. Your sprayer comes with an instructional manual that you must retain and follow for proper operation and maintenance.

(2) Three sets of spare parts.

(3) Pressure gauge.

(b) Preparing to use the sprayer.

(1) Mix the pesticide you are going to use.

(2) Select the appropriate nozzle.

(3) Use the solid stream nozzle to spray cracks and crevices. This type of nozzle is most appropriate if cockroaches are suspected.

(4) Use the hollow cone nozzle to treat large areas where light coverage is desired.

(5) Use the solid cone nozzle to treat large areas where heavy coverage is desired. This type of nozzle is especially effective in weedy, heavily vegetated areas and is often used when ticks and mites are suspected.

(6) Use the flat fan nozzle for even coverage of pesticide on a flat surface, such as a wall. You would also use this type of nozzle to spray a dumpster for fly control.

QUESTION: What nozzle should you use if you want heavy coverage over a large area?

ANSWER: Solid, or full, cone nozzle.

QUESTION: In what situation is the solid stream nozzle most appropriate.

ANSWER: To spray into cracks and crevices when cockroaches are suspected.

(7) Pressurize the sprayer to 40 psi. Unlock the pump handle by turning it ninety degrees to the left. If this is the first time you are using the sprayer for the day, you can increase the efficiency of the pump and make it easier to operate by putting a few drops of lubricating oil on the pump rod. (Note: This is the only lubrication the sprayer requires.)

(c) Sprayer operation. Operate the sprayer by squeezing the operating lever on the wand and moving the wand back and forth to create an even spray.

NOTE: It's a good idea to practice your spraying technique using water to simulate the pesticide until you are able to cover the designated surface evenly and without run-off.

CAUTION: Use all of the pesticide in the sprayer on the job, whenever possible. NEVER pour excess pesticide down the drain or onto the ground.

(d) Sprayer maintenance. Just like any other piece of equipment, a certain amount of maintenance is required to keep the sprayer operating efficiently. Sprayer maintenance is an operator responsibility.

(1) Rinse the sprayer after each use. Triple-rinse the sprayer and spray the rinse water over the treated area or store it in an approved, properly labeled container for future use.

(2) Wipe the outside of the sprayer. After rinsing, wipe the outside of the sprayer to prevent pesticide from crystallizing. The crystals will corrode metal, jam the valves, deteriorate the gaskets and cause the nozzle to malfunction.

NOTE: Any time the sprayer fails to function properly, thoroughly clean the tank and the strainers in water. Remove the nozzle strainer and the in-line strainer from the wand handle.

(3) Replace worn parts. Parts that may need replacement include the hose, the leather piston cup and the pump cylinder valve.

QUESTION: What do you pressurize the sprayer to prior to spraying the pesticide?

ANSWER: 40 psi.

QUESTION: Who is responsible for maintaining the 2-gallon sprayer?

ANSWER: The operator.

DEMONSTRATION: Demonstrate for the students the proper procedures for replacing the hose, the leather piston cup and the pump cylinder valve. Refer to the manufacturer's instruction manual that comes with the sprayer for the steps involved in replacing these parts.

III. SUMMARY (2 minutes).

A. Review the Main Points.

1. The nonchemical (sanitation) methods of controlling arthropods.

2. Properties of pesticides.

3. The factors to consider when assessing the risk associated with the use of pesticides.

4. Safety precautions associated with the use of pesticides.

5. Disposal methods for pesticides and their containers.

6. The steps required to prepare the 2-gallon sprayer for use.

7. The steps required to operate the 2-gallon sprayer.

8. The measures taken to maintain the 2-gallon sprayer.

B. Closing Statement: I hope you have seen that relatively simple but consistent sanitation practices can go a long way toward keeping arthropods at an acceptable level in your unit area. If necessary, these measures may be augmented with the use of pesticides, but remember that these are toxic chemicals and must be used in accordance with the label instructions. When used to apply pesticides, the 2-gallon sprayer can be a valuable tool. As a member of the Field Sanitation Team you are authorized to operate the 2-gallon sprayer. However, don't forget the importance of maintenance—it is an operator responsibility. Finally, always remember to read and follow ALL label instructions. When conflicting data is encountered remember, THE LABEL IS THE LAW.

LESSON 10—RODENT MANAGEMENT
(2 hours)

COURSES PRESENTED TO: Field Sanitation Team Members.

PLACE: Classroom.

REFERENCES:

FM 21-10, FIELD HYGIENE AND SANITATION, 21 June 2000.

FM 4-25.12, UNIT FIELD SANITATION TEAM.

RELATED SOLDIERS MANUAL/MOS TASKS: None.

STUDY ASSIGNMENT: None.

STUDENT UNIFORM AND EQUIPMENT: Uniform of the day.

TOOLS, EQUIPMENT, AND MATERIALS: Snap, nonpoisonous bait (i.e. peanut butter) for use in demonstration.

PERSONNEL: One instructor.

INSTRUCTIONAL AIDS: None.

TROOP REQUIREMENTS: None.

TRANSPORTATION REQUIREMENTS: None.

RISK ASSESSMENT: Low.

SAFETY REQUIREMENT: None.

METHODS OF INSTRUCTION: Conference/demonstration, 2 hours.

I. INTRODUCTION (3 minutes).

A. Opening Statement: Provide a motivational opening appropriate to your student population such as the following. Throughout history, rodents have played an important role in human affairs. Rodents are carriers of several diseases, and are a host for many more. One of these deadly diseases is plague. This disease alone caused the death of approximately one fourth of the population of Europe during the middle ages. Plague still occurs today, even in the US. In addition to disease transmission, rodents cause millions of dollars of damage to crops and foods each year in the US alone. This lesson covers rodent characteristics as well as the intimate relationship of rodents to human disease, rodent management, and dead rodent disposal.

B. Objectives.

1. Terminal Learning Objective: Inform the students of the terminal learning objective for this lesson: Given classroom instruction, FM 21-10 and FM 4-25.12, direct rodent management IAW FM 21-10 and FM 4-25.12.

2. Enabling Learning Objectives: Inform the students of the enabling learning objectives for this lesson.

(a) Describe the general characteristics of rodents.

(b) Identify the habitat, life cycle, food preferences, and physical characteristics of the 3 species of rodent important to military operations.

(c) Name the human diseases associated with rodents.

(d) Identify the measures used to control rodents.

(e) Identify the processes and procedures associated with the disposal of dead rodents.

II. EXPLANATION (90 minutes).

A. Rodent Characteristics.

1. Norway rat.

(a) Characteristics.

(b) Habitat.

(c) Food.

(d) Life cycle.

2. Roof rat.

   (a) Characteristics.

   (b) Habitat.

   (c) Food.

   (d) Life cycle.

3. House mouse.

   (a) Characteristics.

   (b) Habitat.

   (c) Food.

   (d) Life cycle.

QUESTION: What three rodents are of particular importance to the military. Why?

ANSWER: The Norway rat, the roof rat, and the house mouse. They are important because these species have closely associated themselves with humans.

QUESTION: Which of the rodents that we discussed is the largest? The smallest?

ANSWER: The Norway rat is the largest (16 ounces), the house mouse is the smallest ($^1/_2$—$^3/_4$ ounce).

NOTE: Continue to query the students about the important and distinguishing characteristics of these three rodents. Continue with the lesson when you feel the students can identify these rodents and their characteristics.

B. Diseases Carried by Rodents.

   1. Leptospirosis.

   2. Salmonellosis.

   3. Hantavirus.

   4. Rat bite fever.

QUESTION: What rodentborne disease is caused by inhaling dried fecal or urine particles?

ANSWER: Hantavirus.

QUESTION: How is Salmonellosis contracted?

ANSWER: By eating food that is contaminated with the disease organism.

C. Diseases Spread by Rodents. Not only do rats and mice carry harmful organisms that cause disease in man, but the are also the host for fleas and mites, known as ectoparasites, which also carry diseases.

1. Plague.

2. Murine typhus.

3. Rickettsial pox.

QUESTION: How is plague spread to humans?

ANSWER: By the bite of an infected flea or from human to human.

D. Rodent Management.

1. Rodent survey.

2. Eliminating food sources.

(a) Eliminate access to garbage by using tight-fitting lids and disposing of garbage regularly in approved sites.

(b) Store all food in a tightly covered, metal, rodent-proof container. Although plastic bags may reduce the odors that attract rodents to your area, they are not rodent-proof.

(c) Clean up any food spills that may occur.

3. Eliminating water sources.

(a) Drain run-off puddles that develop in low spots.

(b) Remove any items from the unit area that may hold water, such as old tires and cans.

(c) Keep stored water in bottles or five-gallon cans that close tightly.

(d) Store cases of bottled water off the ground on pallets.

(e) In areas with indoor plumbing, check to ensure that there are no leaky pipes. Repair any leaks found as soon as possible.

4. Eliminating shelter.

(a) Keep the unit area free of unnecessary debris, building material, and trash to limit the areas where rats and mice can hide or nest.

(b) Minimize the amount of vegetation around buildings and tentage.

(c) Keep your living areas free from clutter.

QUESTION: Why is the rodent survey important?

ANSWER: For early detection.

QUESTION: What sanitation (nonchemical) measures can be taken to manage the rodent population in your unit area?

ANSWER: Eliminate sources of food, water, and shelter.

NOTE: Before continuing with the lesson, discuss the specific methods of rodent management (for example, eliminating access to garbage). Continue when the students have a thorough understanding of the nonchemical measures discussed above.

5. Rodent traps.

(a) Snap traps.

(1) Location.

(2) Number of traps.

(3) Bait.

WARNING: DO NOT use poisonous baits on snap traps that are placed in food storage or preparation facilities.

DEMONSTRATION: Demonstrate to the students how to set and bait a snap trap. Be sure to caution them against getting their fingers in the way of the hammer once the trap has been set.

(b) Bait stations.

WARNING: These chemicals should never be used in food areas and should not be stored with or near food items. Rodent baits, known as rodenticides, may be confused for food and eaten by humans.

(1) Type of bait.

(2) How it works.

(3) Design of bait station.

(4) Effective placement.

NOTE: If you notice that the rodents are not accepting the bait from within the bait station, notify Preventive Medicine personnel.

QUESTION: What type of bait is typically used in the bait station? What does this imply?

ANSWER: A multiple dose anticoagulant. This means the rodent must receive multiple doses (feed multiple times over a period of days) with no more than 48 hours between doses. When used properly, the bait will cause the rodent to hemorrhage.

E. Dead Rodent Removal.

1. First, spread insect repellent on your hands, sleeves, and the front of your uniform.

2. Use long-handled tongs or a shovel to pick up the dead animal. Place the carcass in a plastic bag or in a metal container with a tight-fitting lid.

3. Finally, burn or bury the remains IAW your unit's tactical situation and local environmental restrictions.

QUESTION: Why put insect repellent on before handling dead rodents?

ANSWER: You can't assume that just because the animal is dead that the parasites living on it are dead, too. Insect repellent protects you from the bites of any parasites still living on the carcass.

QUESTION: Should you burn or bury the dead rodents?

ANSWER: The method of disposal should be carried out in accordance with the unit's tactical situation and local environmental restrictions.

III. SUMMARY (2 minutes).

A. Review the Main Points.

1. The general characteristics of rodents.

2. The habitat, life cycle, food preferences, and physical characteristics of the 3 species of rodent important to military operations.

3. The human diseases associated with rodents.

4. The measures used to control rodents.

5. The processes and procedures associated with the disposal of dead rodents.

B. Closing Statement: During this lesson you were introduced to the general characteristics of rodents, and the specific characteristics and biology of the Norway and roof rats as well as the house mouse. You also learned about the relationship between rodents and human disease and the management of rodent populations in your unit area. As you can see, in field sanitation everything is linked in some way; practicing poor field sanitation techniques is an invitation to rodents and increases the likelihood that the soldiers in your unit will contract rodentborne disease.

LESSON 11—PREVENTING HEAT INJURY
(2 hours)

COURSES PRESENTED TO: Field Sanitation Team Members.

PLACE: Classroom.

REFERENCES:

FM 21-10, FIELD HYGIENE AND SANITATION, 21 June 2000.

FM 4-25.12, UNIT FIELD SANITATION TEAM.

RELATED SOLDIERS MANUAL/MOS TASKS: None.

STUDY ASSIGNMENT: None.

STUDENT UNIFORM AND EQUIPMENT: Uniform of the day.

TOOLS, EQUIPMENT, AND MATERIALS: 1 WBGT Index Calculator for every 2 candidates, 1 WBGT kit for demonstration.

PERSONNEL: One instructor.

INSTRUCTIONAL AIDS: None.

TROOP REQUIREMENTS: None.

TRANSPORTATION REQUIREMENTS: None.

RISK ASSESSMENT: Low.

SAFETY REQUIREMENT: None.

METHODS OF INSTRUCTION: Conference/demonstration, 2 hours.

I. INTRODUCTION (3 minutes).

A. Opening Statement: Provide a motivational opening appropriate to your student population such as the following. As soldiers, we are often required to deploy from areas that are temperate to areas that are either extremely hot or extremely cold. Although we can not control the climate in which we must work, there are many things that can be done to prevent the harmful effects the climate has on our bodies. This lesson focuses what you, as a member of the field sanitation team, can do to direct the measures to prevent heat injury to the soldiers in your unit.

B. Objectives.

1. Terminal Learning Objective: Inform the students of the terminal learning objective for this lesson: Given classroom instruction, FM 21-10 and FM 4-25.12, direct heat injury prevention practices IAW FM 21-10 and FM 4-25.12.

2. Enabling Learning Objectives: Inform the students of the enabling learning objectives for this lesson.

(a) Define the three types of heat injury.

(b) Select the factors that influence heat injury.

(c) Select the measures to prevent heat injuries.

(d) Compute the WBGT Index.

II. EXPLANATION (90 minutes).

A. Three Types of Heat Injuries.

1. Heat cramps.

(a) Cramps normally involve the muscles of the arms, legs, and abdomen.

(b) Cramps may be severe enough to render a soldier ineffective.

(c) Cramping may be accompanied by symptoms of heat exhaustion (abnormal body temperature).

2. Heat exhaustion.

(a) Classic symptoms include profuse sweating, trembling, weakness, lack of coordination, and anything from a slight sensory clouding to a momentary loss of consciousness.

(b) Additional symptoms may include headache, tingling in the hands and feet, paleness, difficulty breathing, irregular heartbeat, loss of appetite, nausea, and vomiting.

(c) The skin is cool and moist from the evaporation of sweat, the pulse rate is rapid, blood pressure may be low, body temperature may be lower than normal.

3. Heat stroke.

WARNING: Heat stroke is a medical emergency. There is a high death rate associated with heat stroke. The condition of a person suffering from heat stroke will deteriorate rapidly. Therefore, treatment should begin immediately.

(a) Early signs of heat stroke include headache, dizziness, delirium (mental confusion), weakness, nausea, vomiting, and excessive warmth.

(b) Classic sign of heat stroke is hot, red, dry skin, although sweating may be present.

NOTE: Notice that these symptoms are very similar to heat exhaustion. Therefore, care must be taken to treat the victim immediately to avoid having heat exhaustion develop into heat stroke.

(c) Most significant sign is a body temperature over 106° Fahrenheit or 41° Celsius.

(d) After one attack of heat stroke, the individual remains very susceptible to repeated heat injuries. Therefore, these individuals should avoid subsequent exposure to hot weather conditions.

QUESTION: What are 3 signs of heat stroke?

ANSWER: Correct answer will include any 3 of the following: hot, red, dry skin; sweating; body temperature over 106°F; mental confusion: weakness: nausea; vomiting, excessive; warmth; headache; or dizziness.

QUESTION: What factor increases a soldiers likelihood of repeated heat injury?

ANSWER: History of previous heat injury.

QUESTION: What heat injury is characterized by painful muscle cramps?

ANSWER: Heat cramps.

B. Factors that Influence Heat Injury.

1. Acclimatization.

(a) Soldiers who grow up in cool climates but are deployed to a warm or hot climate for training are more susceptible to heat injury. Their bodies do not handle the heat stress well.

(b) Soldiers who serve in hot climates but are then stationed in a cool geographical region, such as Germany, lose their acclimatization to heat in about one month.

2. Being overweight or unfit.

3. Fatigue levels.

4. Foods and alcohol.

5. Medications.

(a) Cold medications, antihistamines and antidiarrheal medicines all contain drying agents that reduce the amount of water in the body. With less water available, you can't sweat as much. Therefore, your body's ability to cool itself is reduced.

(b) Some drugs may cause a slight fever. Fever increases the amount of heat to be dissipated by the body. Some of the immunizations received by soldiers induce a temporary fever. Care should be taken if you must be exposed to heat when you have a fever.

6. Clothing.

QUESTION: What should you remember about the influencing factor known as fatigue?

ANSWER: Fatigue impairs the body's ability to lost heat. It takes more energy to lose heat, so a fatigued individual will not be able to cool off as efficiently as a rested individual.

QUESTION: What side effects can some drugs and medications have on the body?

ANSWER: Dehydrating effects or fever.

QUESTION: What is acclimatization?

ANSWER: Acclimatization refers to how well adapted a soldier is to his environment.

C. Preventing Heat Injuries.

1. Replace water lost through perspiration.

(a) To replace the water lost, you need to make sure that soldiers are being encouraged to drink small amounts of water frequently, and given time to do it, throughout the work period.

(b) Use the chart found in FM 21-10 and FM 4-25.12 to determine the amount of water to have on hand while soldiers are working in the heat.

NOTE: Have soldiers review the water needs chart in FM 21-10 and FM 4-25.12. Discuss the contents of the chart before moving on in the lesson.

CAUTION: Soldiers need to be provided adequate water at all times. The belief that our bodies can be taught to adjust to decreased water intake is incorrect. When water is in short supply, limiting physical activity to the early morning or late evening hours when the heat load is less and sweating is reduced can save a substantial amount.

2. Replace salt lost through perspiration.

NOTE: There may be operations where a doctor determines that even more salt is required in the diet. In those rare instances, guidance will come down to the units through their medics, physician assistants, and doctors. This decision is NOT an FST member decision.

3. Allow for periods of acclimatization.

(a) The body's acclimatization to heat begins with the first exposure and it's usually well developed by the end of the first week. However, soldiers who are unusually susceptible to heat will require additional time to become fully acclimatized.

(b) Once acclimatized to heat, a soldier will retain adaptation for about one week after leaving the hot environment, but if he's not exposed to work in high temperatures the acclimatization will decrease at a variable rate. Most acclimatization is completely lost within one month.

4. Maintain good general health.

5. Establish work/rest schedules. As the heat load increases, work/rest schedules should be established. Table 3-1 in FM 21-10 gives an example of suggested work/rest periods. Leaders should also be encouraged to take advantage of cooler hours to accomplish a portion of the work.

6. Protection from the environment.

NOTE: There are other ways to protect soldiers from the environment that are often overlooked. For example, simply marching over grass instead of a paved surface will protect a soldier from the heat reflected off of the hard surface.

7. Education.

(a) Soldiers should be informed of the potentially serious results of heat injury, the general nature of these conditions, and how they can be prevented.

(b) Leaders should be trained to identify conditions under which heat injuries are most likely to occur. They should be able to recognize the earliest sign of heat injury and take action to prevent the development of serious cases.

(c) All personnel should also be trained and efficient in the common soldiers' task of providing first aid to heat injured soldiers.

(d) Medical personnel should assist commanders in the development of local programs for heat injury prevention.

QUESTION: How long should a soldier be allowed to acclimatize?

ANSWER: Fourteen days.

D. The Wet Bulb Globe Temperature (WBGT) Index.

1. Purpose and general use of the WBGT.

(a) The amount of heat stress on the body is measured by the WBGT index.

(b) Physical activity recommendations and fluid replacement guidelines for the various heat categories can be found in FM 21-10 and FM 4-25.12.

(c) Compute the WBGT index on site, where the soldiers are working.

(d) Peak conditions usually occur between 1200 and 1600 hours. Local and regional conditions may warrant modification of the work schedule during these peak hours.

2. The WBGT kit.

(a) Wet bulb thermometer.

(b) Black globe thermometer.

(c) Dry bulb thermometer.

DEMONSTRATION: Using the WBGT kit demonstrate its use.

3. Compute the WBGT index.

(a) Prepare the kit for operation.

(1) Open the kit and lift out the thermometer assembly. Check the assembly for deficiencies or damage.

(2) Wet the cotton wick and fill the plastic flask of the wet bulb thermometer with distilled water.

(3) Attach the tripod and position the kit approximately four feet off the ground.

(4) Let the tripod sit undisturbed for at least ten minutes to allow the thermometers to stabilize.

(b) Take the readings. After the thermometers have stabilized, observe and record the readings from each of the three thermometers.

NOTE: The WBGT index can be calculated by using method (c) OR(d) below.

DEMONSTRATION: Ask the students to follow along as you demonstrate the use of the WBGT Index Calculator. Give the students one or two scenarios and ask them to compute the WBGT Index based upon those scenarios.

(c) Use the WBGT index calculator to determine the WBGT index.

(1) Locate the dry bulb temperature on the dry bulb thermometer scale.

(2) Holding the wet bulb scale, slide the dry bulb scale until the wet bulb temperature is directly under the dry bulb temperature.

(3) Locate the black globe temperature on the bottom scale. Read the WBGT index from its scale directly above the black globe temperature.

(d) Use mathematical formulas to determine the WBGT index.

(1) Multiply the wet bulb temperature by 0.7.

(2) Multiply the black globe temperature by 0.2.

(3) Multiply the dry bulb temperature by 0.1.

(4) Add the products of the three calculations. The sum is the WBGT index.

(e) Find the heat category associated with the WBGT index you have calculated.

NOTE: Provide the students with the opportunity to determine the WBGT index from the WBGT as well as using the calculations. Continue the lesson when you feel the students have mastered both techniques.

NOTE: Review the actions and precautions associated with each of the heat indices. Query the students and continue the discussion until the students understand the concepts associated with heat categories and their relationship to the WBGT index.

III SUMMARY (2 minutes).

A. Review the Main Points.

1. The three types of heat injury.

2. The factors that influence heat injury.

3. The measures to prevent heat injuries.

4. Computing the WBGT Index.

B. Closing Statement: Directing heat injury prevention measures in your unit requires that you know the signs and symptoms of heat injury. You must also be able to inform the soldiers in your unit of the factors that influence heat injury and encourage them to follow the basic guidelines of prevention. In addition, you should be able use the information obtained from the wet bulb globe thermometer to establish reasonable work/rest schedules and determine the water needs for the soldiers in your unit.

LESSON 12—PREVENTING COLD INJURY
(2 hours)

COURSES PRESENTED TO: Field Sanitation Team Members.

PLACE: Classroom.

REFERENCES:

FM 21-10, FIELD HYGIENE AND SANITATION, 21 June 2000.

FM 4-25-12, UNIT FIELD SANITATION TEAM.

TB MED 81, COLD INJURY, 30 September 1976.

RELATED SOLDIERS MANUAL/MOS TASKS: None.

STUDY ASSIGNMENT: None.

STUDENT UNIFORM AND EQUIPMENT: Uniform of the day.

TOOLS, EQUIPMENT, AND MATERIALS: None.

PERSONNEL: One instructor.

INSTRUCTIONAL AIDS: None.

TROOP REQUIREMENTS: None.

TRANSPORTATION REQUIREMENTS: None.

RISK ASSESSMENT: Low.

SAFETY REQUIREMENT: None.

METHODS OF INSTRUCTION: Conference, 2 hours.

I. INTRODUCTION (3 minutes).

A. Opening Statement: Provide a motivational opening appropriate to your student population such as the following. As you know, soldiers are subject to exposure to all climates and weather conditions. For example, deployment may take a soldier from an area with a temperate climate to one of extreme cold. Since we'll never be able to avoid deploying to the cold weather climates altogether, there are things that we should learn to do to prevent the harmful effects the cold has on our bodies.

B. Objectives.

1. Terminal Learning Objective: Inform the students of the terminal learning objective for this lesson: Given classroom instruction, FM 21-10 and FM 4-25.12, direct cold injury prevention practices IAW FM 21-10 and FM 4-25.12.

2. Enabling Learning Objectives: Inform the students of the enabling learning objectives for this lesson.

(a) Define the types of cold injury.

(b) Select the factors that influence cold injury.

(c) Select the measures to prevent cold injuries.

(d) Determine the windchill temperature.

II. EXPLANATION (90 minutes).

A. Cold Injuries. Cold injury is defined as tissue damage caused by extreme cold. The type of injury sustained depends upon three factors; the degree of cold to which the body is exposed, the duration of the exposure, and the environmental factors present at the time of exposure. When speaking about specific cold injuries it is important to remember that cold injury can occur at both freezing and nonfreezing temperatures. Thus, cold injuries are classified as either freezing or nonfreezing.

NOTE: Remember, it is up to the medical specialist to recognize the signs and symptoms of all forms of cold injury. Your role as a member of the FST is to enforce individual PMM and make recommendations to the commander regarding the implementation of your unit's preventive medicine measures. Understanding the conditions under which cold injury occurs will allow you to make informed recommendations that will, in turn, keep the soldiers in your unit healthy and combat ready.

1. Category 1—Freezing.

(a) Frostbite.

(b) High altitude frostbite.

2. Category 2—Nonfreezing.

(a) Chilblain.

(b) Hypothermia.

(1) Hypothermia can be classified as mild, moderate, or severe.

(2) Hypothermia can occur in temperatures above freezing, especially in cold water. When it occurs in temperatures below freezing, it is often accompanied by frostbite.

(c) Trench foot.

(1) Trench foot is associated with immobilization, usually standing; and in situations where there is a high dependence on the lower extremities, such as in long walks or marches.

(2) Trench foot is likely to occur when soldiers wear cold, wet boot and socks for prolonged periods.

(d) Immersion foot.

(e) Snow blindness.

(f) Dehydration.

QUESTION: When does hypothermia occur?

ANSWER: When the body loses heat faster than it can produce it.

QUESTION: What are the two cold injury categories?

ANSWER: Freezing and nonfreezing.

DISCUSSION: This is important to remember because it serves as a reminder that cold injury can occur in temperatures well above freezing.

NOTE: Continue to query the students about the important points of each cold injury. Continue when the students have an understanding of these cold injuries.

B. Influencing Factors. There are certain factors that influence the incidence, prevalence, type and severity of the injuries that occur as a result of exposure to the cold. Cold injury is very predictable in that there are certain factors that, when present together, can result in cold injury. It's the combination and severity of these factors that will dictate the amount and type of injury sustained.

1. Agent factors. There is only one agent factor. It is the cold. While the effects of cold in cold injury are apparent, determining them is difficult. The effects of cold are considered in terms of body

heat loss. Also, because of the ways that various host and environmental factors modify the rate of body heat loss, you can not assume that a certain type of injury will be sustained in a certain temperature.

2. Environmental factors.

(a) Weather.

(1) Wind.

(2) Temperature and humidity.

(b) Combat action.

(1) Because of their potential for immobility, soldiers on guard duty should exercise greater awareness of cold injury prevention.

(2) Soldiers on active defense or offense have an increased likelihood of sustaining cold injury. This may be due to several factors including immobility while under fire, prolonged exposure, lack of opportunity to rewarm and change clothing, inability to perform basic personal hygiene practices, fatigue, or a lack of nutrition.

(c) Clothing.

(1) Clothing that becomes wet from perspiration loses much of its insulating value. Therefore, care must be taken when performing high-activity tasks to prevent perspiration from accumulating in the clothing.

(2) Clothing must be kept clean and in good repair to prevent the loss of insulation against the cold.

(3) A standard number of layers can not be prescribed for universal wear during winter months. Therefore, follow the guidelines when determining clothing requirements and making clothing recommendations.

(4) Clothing should be flexible enough to allow outer layers to be removed for comfort and to permit the escape of perspiration during periods of increased physical exertion or in higher temperatures.

(5) Clothing must be loose enough to avoid constriction.

QUESTION: What are the relationships between weather and cold injury?

ANSWER: Effects of windchill increase the rate of body heat loss, low temperatures combined with low humidity increase likelihood of frostbite, high temperatures combined with high humidity increase the likelihood of trench foot.

QUESTION: What factors make a soldier on active offense more likely to sustain cold injury?

ANSWER: Many factors include immobility while under fire, prolonged exposure, lack of opportunity to rewarm and change clothing, inability to perform basic personal hygiene, fatigue, or a lack of nutrition.

NOTE: Continue to query the students about the environmental factors that influence cold injury until they demonstrate a thorough understanding of them.

3. Host factors.

(a) Rank.

(b) History of cold injury.

(c) Level of fatigue.

(1) Mental weariness may lead to apathy which may cause a soldier to neglect his physical needs for survival.

(2) Frequent rotation of troops from the front line can lesson the impact of fatigue.

(d) Discipline, training, and experience.

NOTE: This is the one host factor over which FST members can have a profound impact. The PMM necessary for survival in the cold must be continuously stressed to the troops to enable them to cope with cold injury problems.

(e) Psychosocial factors.

(1) Cold injury tends to occur more often in individuals who have a passive or negative attitude.

(2) Soldiers who display little muscle activity or those who don't feel it necessary to carry extra footwear or change out of their wet socks are also at a higher risk.

(f) Geographical origin.

(g) Race.

NOTE: Be aware that it is more difficult to detect the changes in skin color associated with the progression of frostbite with dark complexions. This fact makes it even more important for small unit leaders and battle buddies to frequently check their soldiers' status in cold weather operations.

(h) Poor nutrition.

NOTE: Soldiers who wear adequate clothing and are properly protected from the cold will not require additional calories during cold weather operations. Each of these soldiers can exist on the military rations provided whether they are A-rations, UGR, or MREs.

(i) Soldiers activity level.

(1) Overactivity, which causes rapid breathing, can result in large amounts of body heat loss.

(2) Immobility causes decreased heat production, increasing the danger of damage to the extremities.

(j) Drugs and medications.

(1) Tobacco and alcohol decrease peripheral circulation and make a soldier more susceptible to frostbite.

(2) Blood pressure medications reduce the circulation making the soldier more susceptible to injury to the extremities.

QUESTION: What is important about a soldier's geographical origin?

ANSWER: Soldiers from warm climates are more susceptible to cold injury.

QUESTION: What are the host factors that influence cold injury?

ANSWER: Rank; history of cold injury; level of fatigue; discipline, training and experience; psychosocial factors; geographical origin; race; poor nutrition; activity level; and drugs and medications.

NOTE: You may have noticed that "age" was not mentioned as a host factor. Because combat soldiers tend to be in the prime of their life, it makes "age" much less significant than the other factors listed here.

C. FST Role in Prevention.

1. Meteorological data.

(a) Weather conditions for each 12-hour period are typically predicted using meteorological data in conjunction with the existing weather conditions.

(b) The commander may use this data to determine the necessity of shortening exposure times of individuals engaged in patrols, on guard, or in motor movement of unheated vehicles.

(c) This data is also used to ensure that the proper clothing is provided for the anticipated weather conditions.

2. The cold injury officer. Each platoon or comparably sized unit should have a cold injury officer or NCO. In many cases, this may be an FST member. This person is selected for their leadership interest and ability to supervise others in simple, but constant, PMM. Frequent observation of the soldiers in the unit is the most important role of the cold injury officer. There are many roles the cold injury officer should expect to perform.

(a) Look at soldiers' exposed skin and extremities for early signs and symptoms of cold injury.

(b) Check all soldiers daily for good personal hygiene, especially of the feet. Remind the soldiers to change their socks at appropriate intervals and do wheat they can to keep them clean and dry.

(c) Encourage soldiers to avoid constricting their extremities by wearing tight-fitting clothes or footgear.

3. The buddy system.

WARNING: Do not ignore the initial signs of frostbite—cessation of the sensation of cold or discomfort followed by a pleasant feeling of warmth.

NOTE: Blanching is evidenced by skin that loses its natural color.

(a) If blanching is recognized on the fingers, rewarm them by holding the fingers against the skin of the abdomen or in an armpit. Hold the blanched area until the skin rewarms and returns to its normal color.

(b) If blanching is noticed in the toes, hold them against your buddy's bare chest or abdomen while protecting your toes from the wind.

WARNING: Rewarming should ALWAYS be done by holding, NOT rubbing, the blanched area.

4. Clothing.

(a) Clothing should be layered.

(b) Soldiers should ventilate the body during physical activity to avoid the accumulation of sweat in the uniform.

(c) Clothing should be kept as clean and dry as possible.

(d) Clothing and footgear should not constrict.

(e) Clothing and footgear should be inspected daily for holes and rips.

(f) Ground forces personnel in cold areas should be equipped with insulated rubber combat boots.

NOTE: Although sweating in these boots does not cause a loss of insulation, it does lead to the softening of the soles of the feet. Trauma to the soles, which can be produced simply by walking, can lead to skin loss and may require hospitalization.

5. Individual PMM. Soldiers should be instructed as to how they can protect themselves from the ill effects of the cold.

(a) Make sure soldiers wear or carry adequate clothing for the anticipated weather conditions.

(b) Remind soldiers of the benefits of layering loose-fitting clothing.

(c) Advise soldiers to keep their hands well protected. Mittens offer better protection against the cold than gloves.

NOTE: Keeping the hands well insulated is important because it takes a long time to recondition the hands to normal usage levels. Therefore, soldiers should be warned against lengthy exposure of the bare hands and wrists that may cause stiffening and reduce the blood circulation.

WARNING: Soldiers should never touch metal, snow, or other cold objects with their bare hands.

(d) Tell soldiers to do what they can do to avoid immobility in the cold. They should walk around or do some sort of light exercise periodically.

NOTE: Inform soldiers that in situations where they must sit or stand for long periods, it is beneficial to find some cardboard or other insulating material to sit or stand on to insulate themselves from the cold surface.

(e) Remember that certain groups of individuals require greater protection from the cold. Identify them, and supervise these people closely to ensure they are safe from cold injury.

NOTE: The groups of soldiers you need to concern yourself with are the fatigue group, the racial group, the geographical origin group, the negative attitude group, and the group of individuals with previous cold injury.

NOTE: Query the students about the individual preventive medicine measures that can be taken to protect soldiers from cold injury. Continue with the lesson when they have a thorough understanding about their role in cold injury protection as it pertains to individual PMM.

D. Windchill.

1. Windchill chart.

(a) Notice that the maximum wind speed on the chart is forty miles per hour.

(b) Along the top is the thermometer reading in degrees Fahrenheit.

(c) Within the body of the chart are three categories and their associated descriptions. Your recommendations will be made based upon the level of threat of cold injury represented by each of these categories.

2. Determine the windchill. It is important to note that you, as an FST member, will not be issued a thermometer. In addition, the exact temperature may not be known by anyone in your unit.

(a) Locate the wind speed in the left-hand column.

(b) Locate the temperature along the top of the chart.

(c) Locate the point on the chart where these two numbers intersect.

CAUTION: This chart is only good for predicting frostbite to exposed flesh. Any clothing or material that stops or reduces the wind will give a degree of protection to the covered area. UNDER NO CIRCUMSTANCES should you try to predict the amount of protection offered by such clothing when using the windchill chart. You could end up putting your soldiers at additional risk.

NOTE: Another important fact is that wet clothing or boots results in heat loss nearly equal to that of exposed flesh.

NOTE: Provide the students with a number of scenarios to give them practice at determining the windchill temperature. Conclude the lesson when they have a thorough understanding of the effects of windchill and determining the windchill temperature.

III SUMMARY (2 minutes).

A. Review the Main Points.

1. The types of cold injury.

2. The factors that influence cold injury.

3. The measures to prevent cold injuries.

4. Determining the windchill temperature.

B. Closing Statement: Directing cold injury prevention measures in your unit requires that you know the circumstances under which cold injury is likely to occur. You must also be able to inform the soldiers in your unit of the factors that influence cold injury and encourage them to follow the basic guidelines of prevention. In addition, you should be able use the information obtained from the windchill chart to provide your commander with appropriate guidance aimed at preventing cold injury to the soldiers in your unit.

LESSON 13—CONTROLLING TOXIC INDUSTRIAL MATERIALS
(3 hours)

COURSES PRESENTED TO: Field Sanitation Team Members.

PLACE: Classroom.

REFERENCES:

FM 21-10, FIELD HYGIENE AND SANITATION, 21 June 2000.

FM 4-25.12, UNIT FIELD SANITATION TEAM.

FM 100-14, RISK MANAGEMENT, 23 April 1998.

RELATED SOLDIERS MANUAL/MOS TASKS: None.

STUDY ASSIGNMENT: None.

STUDENT UNIFORM AND EQUIPMENT: Uniform of the day.

TOOLS, EQUIPMENT, AND MATERIALS: None.

PERSONNEL: One instructor.

INSTRUCTIONAL AIDS: None.

TROOP REQUIREMENTS: None.

TRANSPORTATION REQUIREMENTS: None.

RISK ASSESSMENT: Low.

SAFETY REQUIREMENT: None.

METHODS OF INSTRUCTION: Conference, 1 hour.

I. INTRODUCTION (5 minutes).

A. Opening Statement: Provide a motivational opening appropriate to your student population such as the following. The chance of US soldiers being exposed to Toxic Industrial Materials (TIM) during operations increases each year as the world becomes more and more industrialized. Many operations in recent history involve US units deploying into urban areas devastated by civil unrest and war. These areas

are filled with industrial production and storage facilities that have been damaged or destroyed in the conflict. Our soldiers may be exposed to harmful and potentially deadly chemicals that have been spilled or released either by accident or intentionally. The US has agencies like the Environmental Protection Agency and the Occupational Safety and Health Administration to ensure such TIM are kept away from the population. But in most war-torn areas there are no such agencies available to protect the civilian population or US soldiers from these TIM. The Army has Preventive Medicine experts who can help to protect our soldiers from exposure to TIM, but there is a relatively small number of these technical experts. Accordingly, the FST needs to be able to identify areas of possible contamination and recommend actions to reduce exposure of their unit's troops as well as request PVNTMED support to evaluate the possible TIM hazards.

B. Objectives.

1. Terminal Learning Objective: Inform the students of the terminal learning objective for this lesson: Given classroom instruction, recommend actions to reduce your units exposure to toxic industrial materials (TIM) IAW FM 21-10, FM 4-25.12, and FM 100-14.

2. Enabling Learning Objectives: Inform the students of the enabling learning objectives for this lesson.

(a) Classify toxic industrial materials according to their physical states.

(b) Identify the routes of entry of toxic industrial materials into the body.

(c) Identify the biological effects of toxic industrial materials.

(d) Identify the toxic industrial materials threat and their sources.

(e) Identify the harmful effects of carbon monoxide, hydrogen chloride, bore/gun gases, and solvents, greases, and oils.

(f) Describe the risk management process as it pertains to toxic industrial materials.

(g) Describe the preventive medicine measures necessary to protect personnel from the exposure to toxic industrial materials.

(h) Describe the individual preventive medicine measures necessary to protect personnel from the exposure to toxic industrial materials.

II. EXPLANATION (2 hours, 45 minutes).

A. Physical States of TIM.

1. Gas.

(a) A state of matter in which the material is in a gaseous phase at room temperature.

(1) Carbon monoxide.

(2) Hydrogen chloride.

(3) Bore/gun gases.

(b) Gases expand and contract significantly in response to changing temperature and pressure. By increasing pressure and decreasing temperature, gases can be changed into either a liquid or solid state.

(c) Gases mix easily with other gases and uniformly distribute themselves throughout work areas or other contaminated areas.

CHECK ON LEARNING. Ask questions that allow students to demonstrate their understanding of gas as a physical state of matter.

2. Liquid.

(a) The state of matter in which a substance is free flowing and formless at room temperature.

(b) Capable of existing in three forms.

(1) Water.

(2) Vapor.

(a) Finely separated particles of gas floating in air.

(b) Normally seen as fog or smoke.

(c) TIM existing in the form of vapor can be inhaled deeply into the lungs.

(3) Mist.

(a) A suspension of liquid droplets generated by condensation from the gaseous to the liquid state.

(b) Breaking up a liquid into a dispersed state can also cause mist.

NOTE: Explain that an example of mist would be spraying water from a household spray bottle. (If possible, demonstrate this.)

CHECK ON LEARNING. Ask questions that allow students to demonstrate their understanding of liquid and it's various states.

3. Solids.

(a) Solids include fumes such as those from lead soldering, welding and brazing.

(b) Dust is another form of a solid that is very common to most soldiers.

CHECK ON LEARNING. Ask questions that allow students to demonstrate their understanding of solids as a physical state of matter.

B. Routes of Entry into the Body.

1. Inhalation.

(a) The most significant route of entry into the body.

(b) Frequency and duration of exposure effect onset of symptoms.

(c) Inhaled TIM enter the bloodstream through the gas exchange region of the lungs.

(d) Symptoms of TIM inhalation.

(1) Instant effects.

(a) Cough.

(b) Burning in throat or chest.

(2) Delayed effects may develop in periods as short as 24 hours or as long as several years.

NOTE: An example would be asbestosis, from inhaling asbestos, or other chronic lung disorders.

2. Absorption.

(a) Local effects.

(b) Systemic effects.

NOTE: An example is cancer of the liver caused by absorption of carbon tetrachloride.

3. Ingestion.

(a) The result of eating or smoking with contaminated hands or utensils.

(b) Accidental ingestion may occur if toxic materials are stored with food or beverages.

4. Injection.

(a) Normally accidental. May occur from the rupture of high-pressure air or liquid lines.

(b) Toxic materials may enter the body through a traumatic injury such as a puncture wound or laceration.

CHECK ON LEARNING. Ask questions that allow students to demonstrate their understanding of the various routes of entry of TIM into the body.

C. Biological Effects of TIM.

NOTE: There is no way to have a detailed discussion of all of the biological effects of the TIM's that soldiers may encounter. Explain that this lesson will cover only the general biological actions of TIM.

1. Irritation.

(a) Caused by irritants such as sulfur dioxide, acetic acid, formaldehyde, sulfuric acid, iodine, ozone and oxides of nitrogen.

(b) Symptoms include inflammation of the mouth, nose and lung tissue.

2. Asphyxiation.

(a) Caused by asphyxiants such as nitrogen, nitrous oxide, hydrogen, helium, methane, ethane, carbon monoxide and cyanide.

(b) Asphyxiants do not damage the lungs; they displace oxygen or cause the body to become incapable of using oxygen.

3. Anesthesia.

(a) Results from exposure to chemical solvents such as acetone and trichloroethylene.

NOTE: Both of these chemicals are commonly used as degreasing agents in motor pool operations.

(b) Biological effect is a depressant effect on the brain and central nervous system.

(c) The degree of anesthetic effect depends on the type of contaminant as well as the concentration and amount you are exposed to.

4. Systemic poisoning.

(a) May occur from exposure to organic solvents such as methylene chloride and carbon tetrachloride.

NOTE: These chemicals are found in many paints, degreasers and propellants.

(b) Damage internal organs such as the liver, kidney, central nervous system and the cardiovascular system.

5. Cancer.

CHECK ON LEARNING. Ask questions that allow students to demonstrate their understanding of the biological effects of TIM.

D. Medical Threat to Soldiers.

NOTE: Explain that the discussion will be limited to the three TIM that soldiers are likely to encounter on a day-to-day basis, carbon monoxide, hydrogen chloride and bore/gun gases.

1. Carbon monoxide poisoning.

NOTE: Explain that carbon monoxide is a by-product of the incomplete burning of carbon substances such as coal, gasoline, jet fuels and natural gas. Understanding where and how carbon monoxide is produced is a critical step in avoiding exposure to it.

(a) Sources of carbon monoxide.

(1) Internal combustion engines.

(a) Vehicle engines—exhaust is a significant source.

(b) Generators.

(2) Space heaters.

(3) Dynamite and other explosives.

(b) Carbon monoxide hazard.

(1) Because it is odorless, colorless and tasteless its presence may go undetected.

(2) By the time the presence of carbon monoxide is detected, you may be too overcome to remove yourself or your soldiers from the area.

CHECK ON LEARNING. Ask questions that allow students to demonstrate their understanding of the threat posed by carbon monoxide.

2. Hydrogen chloride.

(a) Sources of hydrogen chloride.

NOTE: During recent years, the development and use of better rocket systems has increased the incidence of exposure to hydrogen chloride.

(b) Hydrogen chloride hazard.

CHECK ON LEARNING. Ask questions that allow students to demonstrate their understanding of the threat posed by hydrogen chloride.

3. Bore/gun gases.

(a) Sources of bore/gun gases.

(1) Tank guns.

(2) Artillery cannons.

NOTE: When conventional weapon systems are fired, the ammunition propellant produces toxic gases.

(b) Bore/gun gas hazard. Gases produced when weapons are fired include carbon monoxide and oxides of nitrogen.

NOTE: The ventilation systems on tanks and artillery cannons reduce the chances of exposure to these gases. When conducting preventive maintenance checks and services (PMCS) on these weapon systems soldiers must ensure that the ventilation systems are working at peak efficiency.

CHECK ON LEARNING. Ask questions that allow students to demonstrate their understanding of the threat posed by bore/gun gases.

4. Solvents, greases and oil. Used in the maintenance of vehicles, aircrafts, and weapon systems, these are the most prevalent TIM and pose a significant risk to soldiers.

NOTE: Most of these substances are used in liquid form. Due to their properties, these substances evaporate into vapor readily and the vapors can easily be inhaled into the body.

(a) Most substances in this category are organic compounds. Organic compounds pose a hazard due to their ability to cause cancer and other medical problems.

(1) Solvents.

(a) Carbon tetrachloride.

(b) Trichloroethylene.

(c) Weapons cleaning solvents.

(2) Fuels.

(a) Gasoline (MOGAS).

(b) Diesel fuel.

(3) Lubricants.

(a) Oil.

(b) Grease.

NOTE: Other organic compounds commonly found are the pesticides used to control rodents and arthropods.

(b) Hazards. The widespread use of these substances in day-to-day military operations, both in peacetime and war, put soldiers at a significantly increased risk of exposure. Many times soldiers can be exposed to TIM most unexpectedly.

NOTE: Relate the following story involving US soldiers deployed to Bosnia, to the students:

Deployed soldiers were tasked to remove cardboard boxes from an abandoned warehouse. The warehouse was not well ventilated and was very warm, the soldiers removed their BDU tops as they worked. As the detail went on, many of the soldier's arms became red and started to itch, eventually blisters developed. When Preventive Medicine personnel were called to evaluate the situation, they determined that the boxes had been treated with a fungicide to prevent the cardboard from deteriorating. Since the boxes were not manufactured in the US, there were no controls on how much fungicide should be applied to the boxes. During storage, the fungicide had condensed and formed crystals on the outside of the boxes. In this concentrated form, the fungicide had become a blistering agent. As the soldiers worked, the concentrated fungicide mixed with their perspiration, was absorbed into the skin causing the blisters. Although no obvious hazardous material was seen, the hazard was there.

CHECK ON LEARNING. Ask questions that allow students to demonstrate their understanding of the threat posed by solvents, greases and oils.

E. Harmful Effects Caused by Exposure To TIM.

1. Symptoms of carbon monoxide poisoning.

(a) Headache.

(b) Sleepiness.

(c) Coma.

(d) Death.

NOTE: The symptoms of carbon monoxide poisoning do not reverse themselves quickly. If you remove yourself and your soldiers from the exposure source and your health conditions do not improve, you cannot assume that it is not carbon monoxide poisoning. Ventilate the area completely before returning.

2. Symptoms of hydrogen chloride exposure.

(a) Irritation of the eyes, throat and lungs. (Caused by the action of hydrochloric acid on the mucous membranes.)

(b) Cough.

(c) Acid burn.

(d) Flu-like symptoms.

NOTE: These flu-like symptoms may actually indicate the presence of lung disease.

3. Symptoms of bore/gun gas exposure.

(a) Watch for symptoms of carbon monoxide poisoning.

(b) Lung irritation (oxides of nitrogen).

4. Symptoms of exposure to solvents, greases and oils.

(a) The most common symptoms are skin irritations.

(1) Rashes.

(2) Burns.

(3) Abnormally dry skin.

(4) Infections.

(b) Occupational skin diseases account for the greatest number of reported occupational diseases.

(1) May temporarily limit ability to work.

(2) Normally not severe enough to cause permanent disability.

(3) Healthy skin cells provide natural protection from injury due to exposure to many chemicals.

(4) Cracked, dry or otherwise irritated skin provides less protection.

(5) Type and severity of skin disorders due to exposure to TIM depends on the chemical involved and the duration of exposure.

(c) Other effects.

(1) Organ involvement such as liver and/or brain.

(2) Permanent damage including cancer.

CHECK ON LEARNING. Ask questions that allow students to demonstrate their understanding of the harmful effects caused by exposure to TIM.

F. Managing Risks Associated with TIM.

1. Identify the sources of toxic chemicals in your unit and maintain an up to date list of all chemicals used in the unit for quick reference.

2. Maintain Material Safety Data Sheets (MSDS) for all chemicals used.

(a) Up to date health information.

(b) Hazardous properties.

(c) Control methods.

3. Include risk assessment in planning at all levels.

(a) Incorporate risk management into all operations including training.

(b) Five steps of risk management (FM 100-14).

(1) Identify hazards.

(2) Assess hazards to determine risks.

(3) Develop controls and make risk decisions.

(4) Implement controls.

(5) Supervise and evaluate.

NOTE: Time permitting, allow students to practice performing risk assessments using various TIM.

CHECK ON LEARNING. Ask questions that allow students to demonstrate their understanding of the risk management process as it applies to TIM.

G. Unit Preventive Medicine Measures for Toxic Industrial Materials.

1. Carbon monoxide.

(a) Prevent accumulation of engine exhaust.

(1) Run engines outside.

(2) When engines must be run inside, use tailpipe extensions.

(b) Provide adequate ventilation of work/sleep areas in which space heaters are being used.

2. Hydrogen chloride (from rocket systems).

(a) Position soldiers upwind from rocket systems.

(b) Use respirators designed to protect personnel from these gases.

3. Bore/gun gases (tanks, cannons).

(a) Use on-board ventilation systems.

(b) Ensure proper maintenance and function of bore evacuators.

4. Solvents, greases and oils (liquid chemicals).

(a) Environmental controls.

(1) Minimize exposure of soldiers.

(2) Substitute a safer, less toxic substance for the more toxic substance being used.

NOTE: The use of Stoddard solvents is recommended. A Stoddard solvent is a chemical preparation that gives you the advantage of a solvent without the hazards present in gasoline, kerosene, etc.

(b) Ensure personal protective devices/clothing are available.

(1) Gloves.

(2) Goggles.

(3) Respirators.

NOTE: Ensure soldiers are fit tested for respirators.

(c) Medical controls. Medical controls refer to programs such as periodic physical exams and/or medical surveillance of soldiers to detect early signs of occupational disease.

CHECK ON LEARNING. Ask questions that allow students to demonstrate their understanding of PMM as they apply to TIM.

H. Individual Preventive Medicine Measures for Toxic Industrial Materials.

1. Adhere to the following guidelines.

(a) Run engines outside or use tailpipe extensions.

(b) Ventilate work/sleeping areas when space heaters are in use.

(c) Do not use vehicle engines as a heat source.

(d) Use/maintain vehicle ventilation systems.

(e) Properly maintain bore evacuator systems.

(f) Substitute harmful solvents with safer "Stoddard solvents."

(g) Use protective equipment/clothing.

2. Practice good personal hygiene.

CHECK ON LEARNING. Ask questions that allow students to demonstrate their understanding of individual PMM as they apply to TIM.

III. SUMMARY (10 minutes).

A. Review of Main Points.

NOTE: Ask/answer student questions to ensure understanding of the material presented in this lesson.

1. Physical states of TIM.

2. Routes of entry of TIM into the body.

3. Biological effects of TIM.

4. The threat posed by TIM and their sources.

5. The harmful effects of carbon monoxide, hydrogen chloride, bore/gun gases, solvents, greases and oils.

6. The risk management process as it pertains to TIM.

7. Preventive medicine measures to protect soldiers from exposure to TIM.

8. Individual PMM to protect soldiers from exposure to TIM.

B. Closing Statement. The loss of personnel due to injury or illness caused by non-NBC chemicals, or TIM, can have a serious impact on a unit's ability to accomplish it's mission. Awareness and the use of simple preventive measures can prevent most injuries caused by these substances. One of your jobs as a member of the FST will be to assist the commander in identifying these hazards and implementing the preventive measures necessary to protect your fellow soldiers.

LESSON 14—NOISE HAZARDS AND NOISE MANAGEMENT
(1 Hour)

COURSES PRESENTED TO: Field Sanitation Team Members.

PLACE: Classroom.

REFERENCES:

FM 21-10, FIELD HYGIENE AND SANITATION, 21 June 2000.

FM 4-25.12, UNIT FIELD SANITATION TEAM.

RELATED SOLDIERS MANUAL/MOS TASKS: None.

STUDY ASSIGNMENT: None.

STUDENT UNIFORM AND EQUIPMENT: Uniform of the day.

TOOLS, EQUIPMENT, AND MATERIALS: None.

PERSONNEL: One instructor.

INSTRUCTIONAL AIDS: None.

TROOP REQUIREMENTS: None.

TRANSPORTATION REQUIREMENTS: None.

RISK ASSESSMENT: Low.

SAFETY REQUIREMENT: None.

METHODS OF INSTRUCTION: Conference, 1 hour.

I. INTRODUCTION (3 minutes).

A. Opening Statement. Provide a motivational opening appropriate to your student population such as the following. We are so used to a sound filled environment, that a lack of sound can be disturbing. However, too much sound can literally be deafening. Certain noises can have profound physical and psychological effects on humans. Noise induced hearing loss, the most prevalent health hazard in the military, is a disability that is, in most cases, preventable. While hearing conservation programs are a command responsibility, the Army Medical Department is responsible for ensuring these programs are established and effective. As a member of the Field Sanitation Team, you will play an active role in this program in your unit. In this lesson you will study how to recognize the types and effects of noise, protect against noise, plan for control of noise hazards, and enforce individual and mission noise protection measures. This is valuable information for you since, in your FST duties, you will be able to protect your fellow unit soldiers' hearing loss, which can affect combat efficiency. You will also be able to help to decrease the most prevalent health hazard in the military, noise-induced hearing loss.

B. Objectives.

1. Terminal Learning Objective. Inform students of the terminal learning objective for this lesson: Given classroom instruction, FM 21-10 and FM 4-25.12, direct individual and unit noise protection measures IAW FM 21-10 and FM 4-25.12.

2. Enabling Learning Objectives. Inform the students of the enabling learning objectives for this lesson.

(a) Define the two types of noise.

(b) Recognize the effects of noise on the individual and on the mission.

(c) Identify the preventive medicine measures necessary to protect personnel from exposure to noise.

(d) Identify the individual preventive medicine measures necessary to protect personnel from exposure to noise.

(e) Identify the noise management measures necessary to protect personnel from exposure to noise.

II. EXPLANATION (45 minutes).

A. Types of Noise. Noise is simply defined as unwanted sound whether it is a pure tone, a complex of tones, or unwanted speech or music. The term is usually applied to sounds that contain a large number of separate frequency components, extend over a wide range of frequencies and which are not normally generated to convey meaning or information.

1. Impact, or impulse noise.

(a) Small arms fire.

(b) Cannon fire.

2. Steady noise.

(a) Field generators.

(b) Personnel carriers, tanks, trucks and aircraft.

CHECK ON LEARNING. Ask questions that allow students demonstrate their understanding of the types of noise.

B. Effects of Noise.

1. Effects of noise on individuals.

(a) Immediate reactions.

(1) Ringing in the ears.

(2) Temporary loss of hearing (muffling of sound) which may last minutes to hours.

(3) Pain, which may indicate the eardrum, is broken.

(b) Long term reactions.

(1) Usually leads to permanent loss of hearing.

(2) No known treatment for this type of hearing loss.

2. Effects of noise on unit mission.

(a) Inability to hear important sounds.

(1) Twigs snapping.

(2) Metal rattling.

(3) Vehicles/aircraft approaching.

(b) Loss of hearing may cause a unit's mission to be impaired if positions are overrun or soldiers are caught by surprise.

CHECK ON LEARNING. Ask questions that allow students demonstrate their understanding of the effects of noise.

C. Preventive Medicine Measures (PMM). Units must take certain steps to protect soldiers from noise exposure.

1. Personal protective devices to lessen the risk of hearing loss such as earplugs or earmuffs should be available to soldiers.

2. Leaders must in sure that vehicle or aircraft crew members wear the specifically designed helmets that are equipped with protective devices.

3. Realistic combat training includes the use of artillery simulators and blank ammunition.

4. Leaders should be aware that short-term exposure to noise will effect a soldier's ability to hear combat significant sounds.

(a) Listening posts/observation posts (LP/OP) should be manned by soldiers who have not suffered injury from exposed to noise.

(b) Consider using night vision devices or audible alarms to increase security around the LP/OP.

CHECK ON LEARNING. Ask questions that allow students demonstrate their understanding of the preventive medicine measures used to protect soldiers from the effects of noise.

D. Individual Preventive Medicine Measures (PMM).

NOTE: Read the following excerpt from the Fall 1995 issue of *"The NCO Journal,"* by SGM Kevin Skelly.

"If I could change one thing from the past twenty years, it would be the constant ringing in my ears I live with now—all because I didn't wear hearing protection when I should have. The only thing I can change now are the batteries in my hearing aids."

1. The most important PMM to protect your hearing is to wear the protective devices provided.

(a) Ear plugs.

(b) Ear muffs.

(c) Both (combination).

2. Do not remove protective inserts from CVC or aviators helmets.

NOTE: If soldiers complain that these are uncomfortable, advise them to have the helmet checked for proper size.

3. Avoid exposure to noise.

NOTE: If noise exposure is unavoidable, limit exposure to mission essential times.

4. Keep hearing protection devices clean (to prevent ear infection).

(a) Wash with soap and water.

(b) Dry before replacing in case.

CHECK ON LEARNING. Ask questions that allow students demonstrate their understanding of the individual preventive medicine measures used to protect soldiers from the effects of noise.

E. Hearing Protectors.

1. General principles.

(a) When worn properly, earplugs will create a good seal.

NOTE: Medical personnel are responsible for fitting soldiers for earplugs.

(b) Ear plugs tend to work loose as a result of talking or chewing.

(c) You should have little difficulty understanding conversation when your earplugs are worn, if the speakers voice is raised slightly above the normal level.

(d) Ear plugs are part of your personal issue and are to be taken with you when you PCS.

(e) Well designed, properly fitted earplugs will reduce noise levels by 15 decibels in the lower frequencies and up to 35 decibels in the higher frequencies.

NOTE: At this point, solicit volunteers to demonstrate the proper wear of each type of hearing protection device as you walk the students through.

2. Proper wear of triple-flange earplugs.

(a) Place stem of earplug in inserter (top of earplug case).

(b) Straighten ear canal by pulling gently backward on ear.

(c) Insert smallest flange in ear canal, push and twist plug into place.

NOTE: If you can't get a good seal, the earplug is probably the wrong size. Triple-flange earplugs are available in three sizes.

3. Proper wear of single-flange earplugs.

(a) Straighten ear canal.

(b) Hold tab and insert by pushing and twisting.

(1) Insure a good seal is made.

(2) Tab should be toward rear.

NOTE: If you can't get a good seal, the earplug is probably the wrong size. Single-flange earplugs are available in five sizes.

4. Proper wear of cylindrical earplugs (foam).

(a) Roll the earplug between the thumb and forefinger until it is shaped like a small cone.

(b) Insert the small end into the ear canal and hold.

(1) Allow the earplug to expand.

(2) Insure a good seal is made.

5. Proper wear of earmuffs.

(a) Adjust headband to insure earcup seals are in complete contact with the head.

(b) Personnel wearing eyeglasses must insure that the earcup seals fit well around the temples of the eyeglasses.

NOTE: If the seals have become hard or damaged, they must be replaced. Even a small leak eliminates the protection provided by the earmuffs.

6. Regardless of the type of hearing protector used, the only effective one is the one that is worn consistently. Hearing damage becomes progressively worse with each exposure; you must be able to convince your fellow soldiers of the importance of wearing their hearing protection.

CHECK ON LEARNING. Have students practice proper wear of the various types of hearing protectors. Provide necessary guidance and answer any questions.

F. Noise Management Measures.

1. Identify noise hazards in the unit.

NOTE: In garrison, mark noise hazard areas with signs indicating that hearing protection is required.

2. Leaders should insure that soldiers are medically fitted for, and issued multiple sets of hearing protectors.

NOTE: Leaders should include hearing protectors in periodic inspections such as basic issue layouts.

3. Units should insure that medical support personnel maintain an adequate supply of replacement hearing protectors.

4. Train soldiers to avoid noise whenever possible.

(a) Limit exposure to the time necessary to perform mission essential tasks.

(b) Insure that soldiers who are exposed to noise wear proper hearing protection.

5. Take steps to control noise sources, for example, sandbagging generators.

CHECK ON LEARNING. Ask questions that allow students demonstrate their understanding of the noise management measures.

III. SUMMARY.

A. Review of the Main Points.

1. Types of noise.

2. Effects of noise.

3. Preventive medicine measures to protect soldiers from noise.

4. Individual PMM to protect soldiers from noise.

5. Noise management measures.

B. Closing Statement. Your continued ability to hear and the success of your unit to accomplish its mission are directly dependent on soldiers using hearing protectors in noise areas. Without adequate noise protection, you and your fellow soldiers could lose your lives, and your unit could be destroyed. The FST members play a vital role in ensuring hearing conservation procedures are followed.

LESSON 15—FIELD SANITATION TEAM EQUIPMENT AND SUPPLIES
(1 Hour)

COURSES PRESENTED TO: Field Sanitation Team Members.

PLACE: Classroom.

REFERENCES:

FM 21-10, FIELD HYGIENE AND SANITATION, 21 September 2000.

FM 4.25.12, UNIT FIELD SANITATION TEAM.

RELATED SOLDIERS MANUAL/MOS TASKS: None.

STUDY ASSIGNMENT: None.

STUDENT UNIFORM AND EQUIPMENT: Uniform of the day.

TOOLS, EQUIPMENT, AND MATERIALS: None.

PERSONNEL: One instructor.

INSTRUCTIONAL AIDS: None.

TROOP REQUIREMENTS: None.

TRANSPORTATION REQUIREMENTS: None.

RISK ASSESSMENT: Low.

SAFETY REQUIREMENT: None.

METHODS OF INSTRUCTION: Conference, 1 hour.

I. INTRODUCTION (3 minutes).

A. Opening Statement. Provide a motivational opening appropriate to your student population such as the following. We have covered all the major DNBI threats and the Preventive Medicine Measures you will be responsible for in combating those threats. But, just like maintaining your weapon or vehicles, the FST supplies and equipment must also be maintained to ensure mission capability. Many a mission has been impeded by a lack of equipment or supplies due to them being unserviceable or not on-hand at all. In this lesson you will learn of the equipment and supplies required to accomplish your mission. You will learn who shares responsibilities for your supplies and equipment, some of the maintenance, storage, hazardous handling and transportation requirements for certain key items, and reordering considerations.

B. Objectives.

1. Terminal Learning Objective: Inform the students of the terminal learning objective for this lesson: Given classroom instruction, direct the quality control and reordering procedures for FST equipment and supplies IAW FM 21-10 and FM 4.25-12.

2. Enabling Learning Objectives: Inform the students of the enabling learning objectives for this lesson.

(a) Identify FST member, supply sergeant, and unit commander responsibilities for reordering FST equipment and supplies.

(b) Identify those FST supplies that have special handling requirements.

(c) Determine the FST supplies and equipment required to support a deploying unit.

II. EXPLANATION (45 minutes).

A. Responsibilities.

1. FST Member.

(a) Inspect FST supplies and equipment. It's a good idea to establish a schedule for checking your supplies. Talk to your commander and have quarterly inspections placed on the training schedule.

(1) Check for cleanliness and serviceability.

(a) WBGT kit.

(b) Food service thermometer.

(c) Mouse/rat traps.

(d) Insecticide sprayed.

NOTE: Inform students that maintenance of this equipment was covered in the lessons on Heat Injury Prevention, Food Service Sanitation, and Arthropod Management.

(2) Check shelf-life items for expiration dates.

(3) If the expiration date has passed set the item aside for proper disposal and make a note to order a replacement.

(4) Check the condition of containers.

(a) Leaks.

(b) Breaks.

(5) Check to insure you have sufficient quantities of supplies.

(b) Order replacements for missing, damaged or outdated supplies.

(1) Make an order list containing name, stock number and quantity required.

NOTE: Stock numbers and authorized quantities can be found in Appendix B.

(2) Give the order list to the Supply Sergeant.

2. Supply Sergeant responsibilities. It is the supply sergeant's responsibility to complete the necessary paperwork, order the required items and inform you when the items are available.

3. Commander responsibilities.

(a) Overall responsibility.

(b) Ensure FST is trained, equipped and on orders.

(c) Ensure FST supplies are included in out-load plans.

(d) Ensure FST supplies are available during all phases of deployment.

CHECK ON LEARNING. Ask questions that allow students to demonstrate their understanding of personnel and their responsibilities for FST supplies and equipment.

B. Special Considerations. Most of these FST supply items can be stored in a sealed metal chest or footlocker. The metal chest is included in the authorized supply list. However, by nature of their properties, some items like calcium hypochlorite, insecticides and rodenticides require special handling and storage.

1. Calcium hypochlorite.

CAUTION: Calcium hypochlorite is an oxidizer that will supply oxygen to support combustion if it is combined with organic materials such as fuels. Additionally, at high temperatures, it gives off poisonous gases.

(a) Store away from organic materials.

(b) Store 6 oz. bottles in individual zip-lock bags placed in a serviceable ammunition can marked with a Department of Transportation "Oxidizer" label.

2. Rodenticides, insecticides and insect repellents.

(a) Do not prestock rodenticide baits Talon-G or Maki pellets due to their short shelf life. Order these items on a priority basis prior to an anticipated deployment.

(b) Insect repellents, insecticides and rodenticides require special handling and labeling when being shipped. Unit supply NCO can assist you in preparing these items for shipment.

3. General.

(a) Keep FST materials in original packaging when possible.

(b) Repackage in fiberboard or plywood boxes when necessary.

(c) Store all supplies in a cool, dry, well-ventilated area.

NOTE: Inform students to always wash their hands after handling the supplies and always refer to a product's label directions for any special protective measures.

CHECK ON LEARNING. Ask questions that allow students to demonstrate their understanding of the special considerations that must be taken for certain FST supplies.

C. Required Quantities.

NOTE: This is a demonstration. Provide students with a copy of Appendix B. Walk them through the procedures of determining the required quantities of FST supplies and equipment. Answer any questions they may have.

D. Prepare a Field Sanitation SOP.

NOTE: Provide students with a copy of the generic SOP. Refer to it as you explain each area. Remind students that their SOP should be tailored to their unit's mission.

1. Define individual responsibilities.

(a) Commander.

(b) Unit.

(c) Individual soldier.

2. Define the responsibilities of the FST.

(a) FST make-up.

(b) Food service sanitation.

(c) Field water supply.

(d) Field waste disposal.

(e) Personal hygiene.

(f) Prevention of heat and cold injuries.

(g) Arthropod and rodent management.

3. Provide reference information for unit soldiers in appendices. These appendices should include information on unit and individual preventive medicine measures for avoiding disease and nonbattle injuries.

CHECK ON LEARNING. Ask questions that allow students to demonstrate their understanding of the Field Sanitation SOP.

III. SUMMARY (2 minutes).

A. Review of the Main Points.

NOTE: Ask/answer student questions to ensure understanding of the material presented in this lesson.

1. Responsibilities.

2. Special considerations.

3. Required quantities.

4. Field sanitation SOP.

B. Closing Statement. As you can see, planning for the prevention of disease and nonbattle injuries begins long before your unit deploys. It needs to be part of your normal garrison routine. Just as you maintain your weapon to ensure it is combat-ready, you need to perform maintenance and quality control checks on your unit's field sanitation equipment and supplies to ensure they are ready if and when your unit deploys.

APPENDIX B

CHECKLIST OF EQUIPMENT AND MATERIALS FOR FIELD SANITATION TEAM TRAINING

B-1. Equipment and Materials to be Supplied

a. Chalkboard with chalk and eraser.

b. Devices for handwashing, showering, and shaving (Figure B-1 through B-5).

c. Water trailer, 400 gallons with water.

d. Lyster bags with tripods and clean sticks (one for 1 to 10 students) (Figure B-6).

e. Chlorination kits for water purification (one for 1 to 10 students) (Figure B-7).

f. Iodine tablets (1 bottle of 50 tablets for 1 to 10 students).

g. Canteen with cup.

h. Insulated food container (Figure B-8).

i. Mess kit laundry (Figure B-9).

j. Sanitation Center (Figure B-10).

k. Field food service facilities.

l. Field waste disposal facilities or sanitary demonstration area (Figure B-11 through B-30).

m. Displays of specimens of arthropods of medical importance in the various stages of their life cycles (10 or more sets).

n. Container, 15- to 20-gallon (75 liter) capacity.

o. Insect repellent.

p. Pail (2-gallon capacity).

q. Fatigues (1 pair).

r. Field cot with air mattress and blanket.

s. Insect bar (T-bar and net).

t. Needle (large) and thread.

u. Insecticide dispenser (aerosol).

v. Insecticide hand sprayer (2-gallon capacity).

w. Water to simulate pesticide authorized for unit use (sufficient quantity for instructor and students to prepare sprayers for use).

x. Rodent snap traps (one for each student and one for the instructor).

y. Bait stations (one for each student and one for the instructor—made from available materials).

z. Anticoagulant poison—simulated (1/2 pound [224 grams] for students and the instructor).

aa. Suitable food item for bait (sufficient quantity for all students and the instructor).

bb. Food thermometers.

B-2. Equipment and Materials which the Student is to Bring to Class

a. Notebook and pencil.

b. Field Manual 21-10.

c. Canteen with cup.

d. Each team provides a sprayer for training purposes.

e. MRE spoon.

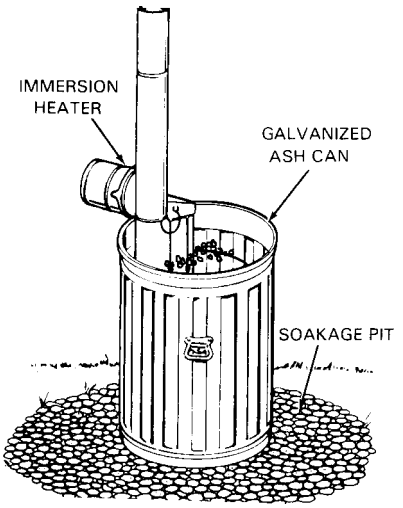

Figure B-1. Clear boiling water for shaving.

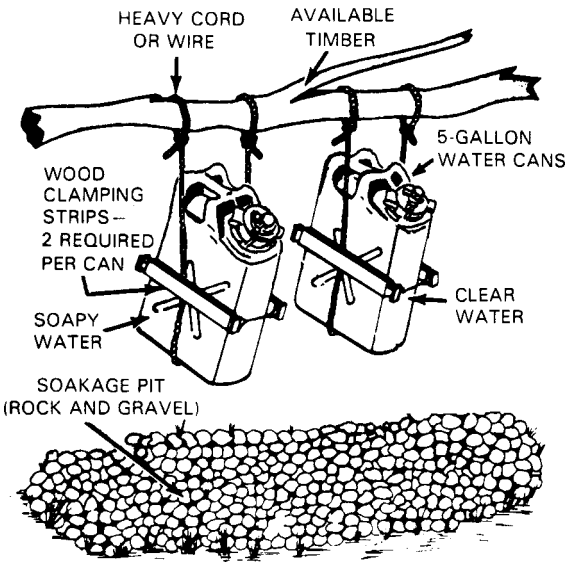

Figure B-2. Handwashing device—tipping 5-gallon cans.

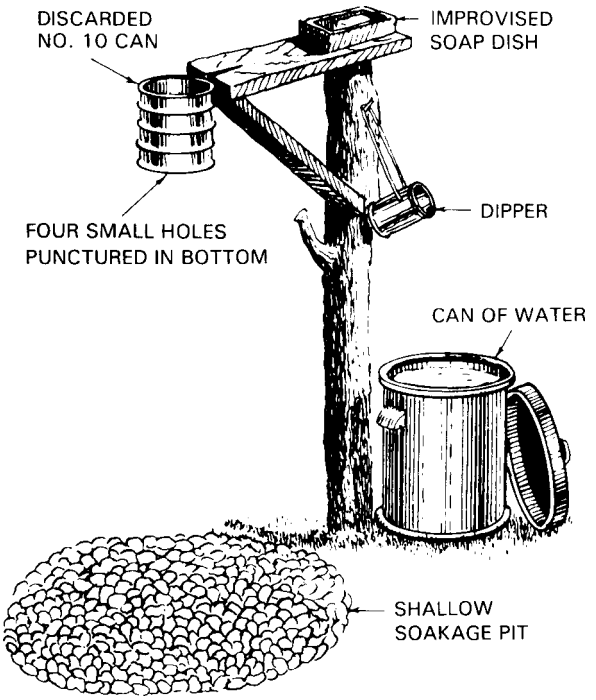

Figure B-3. Handwashing device.

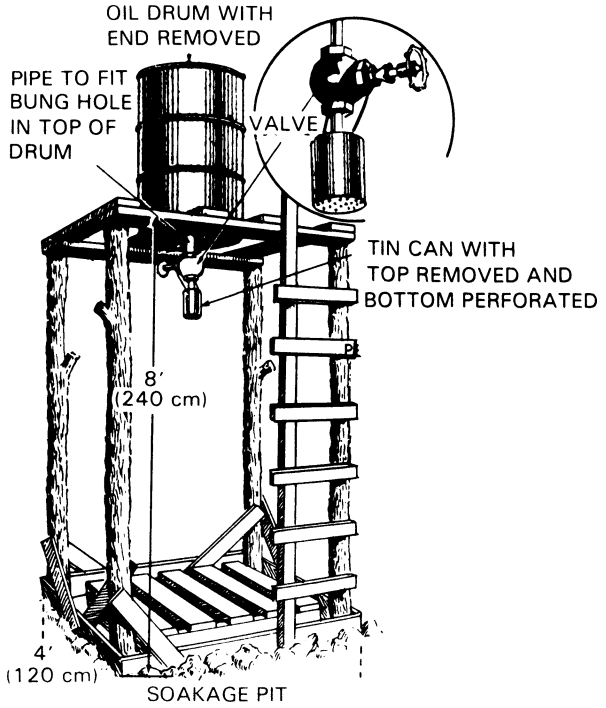

Figure B-4. Shower—solar heated.

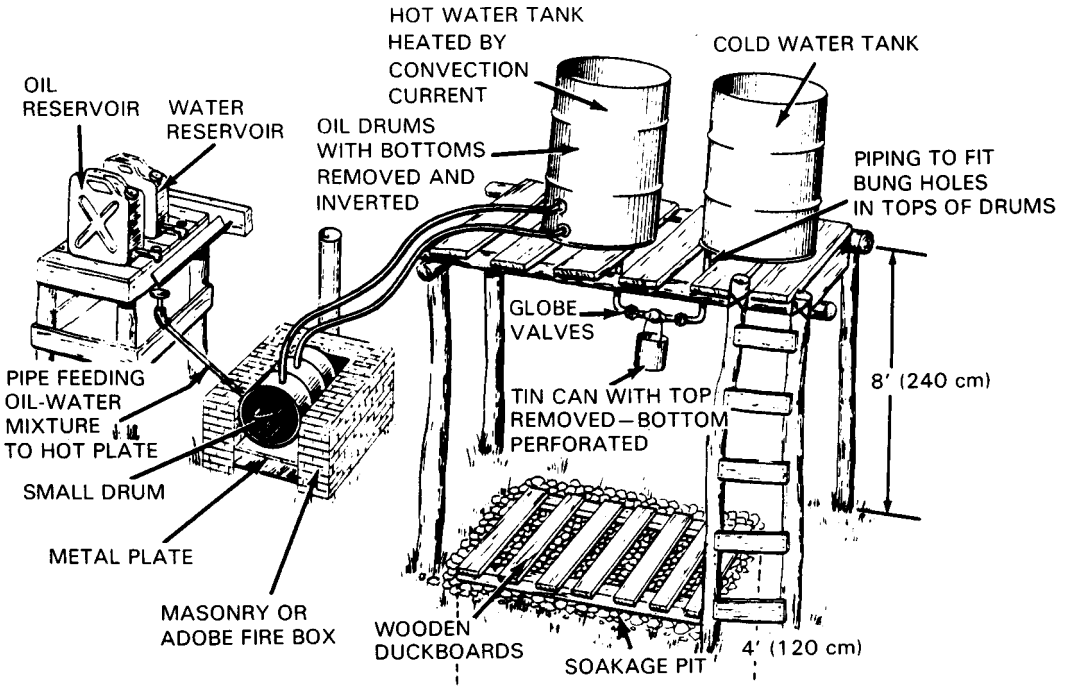

Figure B-5. Shower—oil-water flash burner.

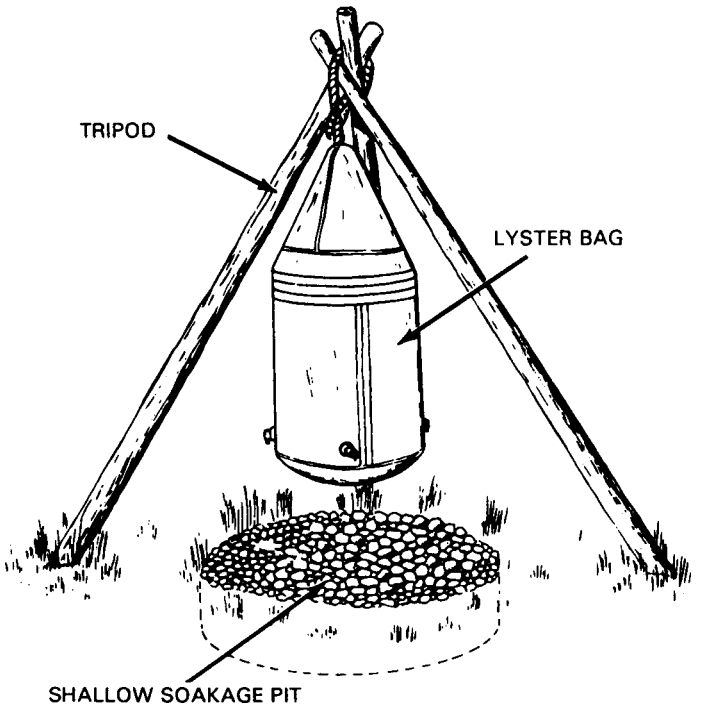

Figure B-6. Lyster bag setup.

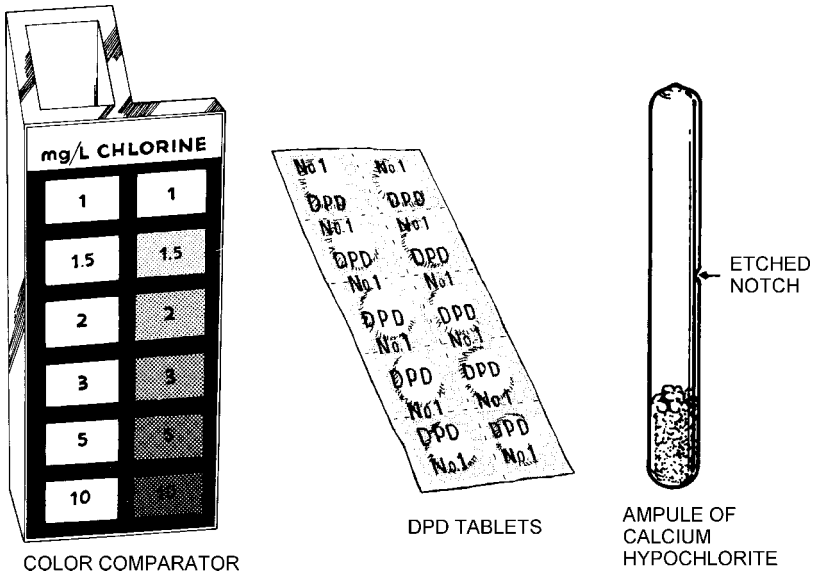

Figure B-7. Items in the DPD chlorination kit.

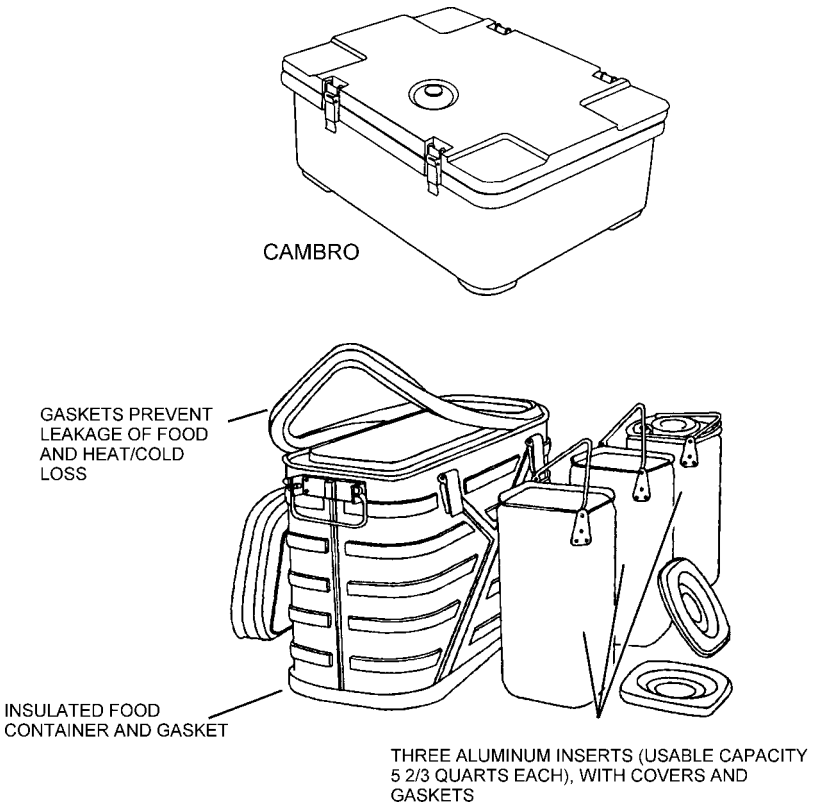

Figure B-8. Insulated food containers.

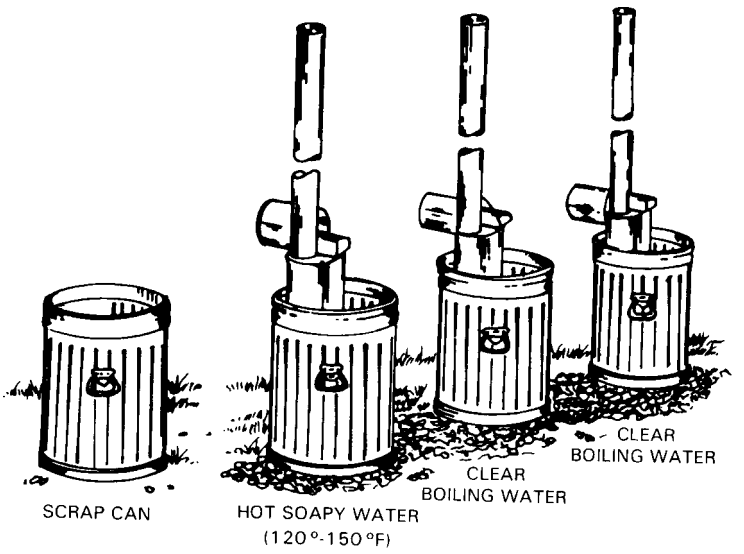

Figure B-9. Mess kit laundry.

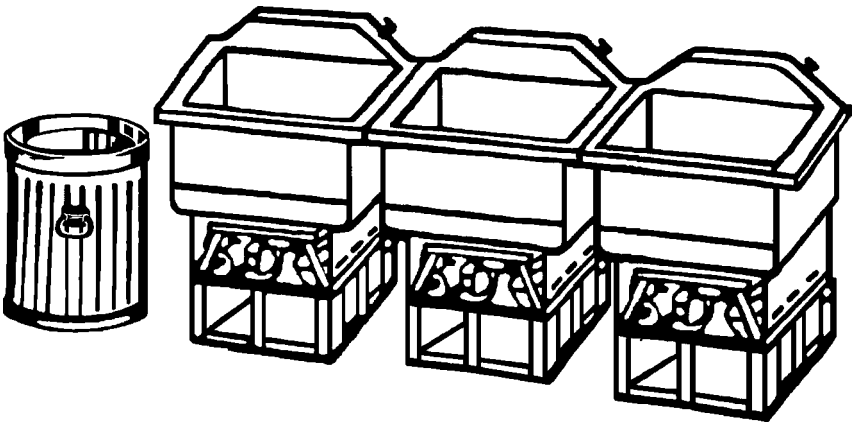

Figure B-10. Sanitation center.

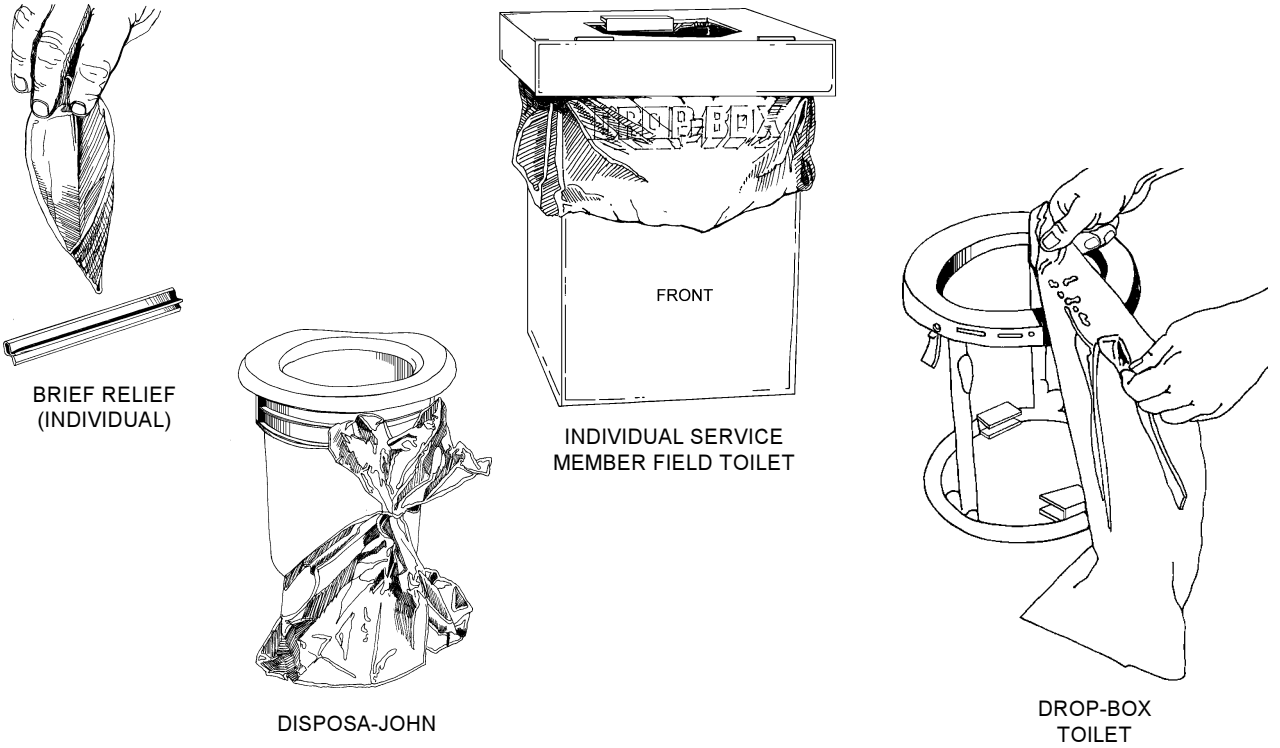

Figure B-11. Chemical toilets.

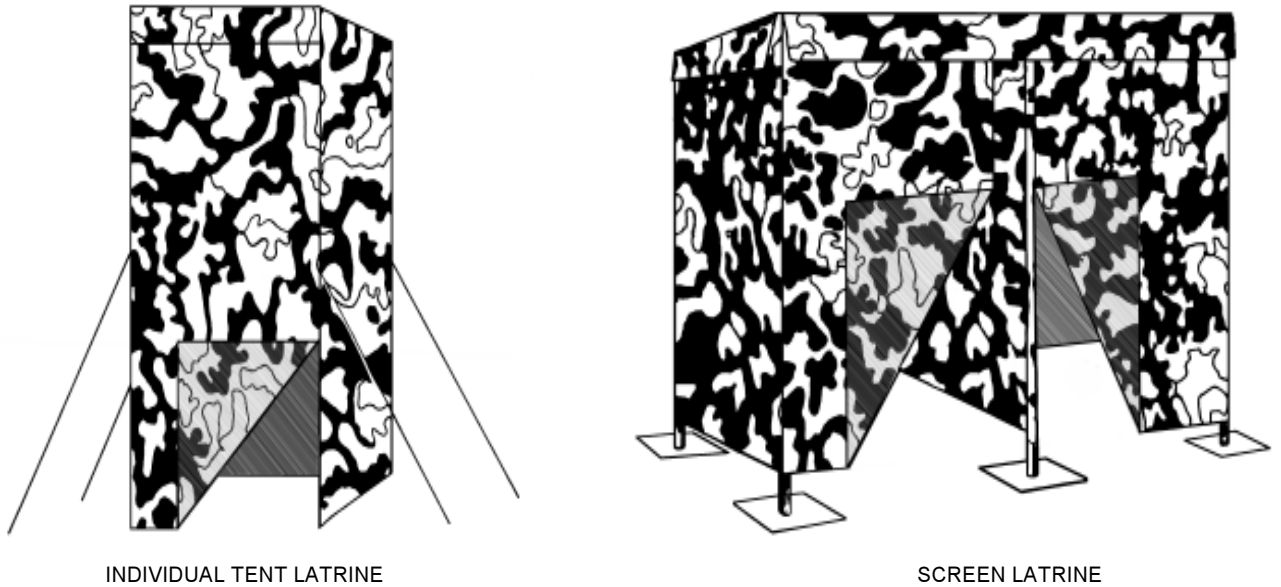

Figure B-11. Chemical toilets (continued).

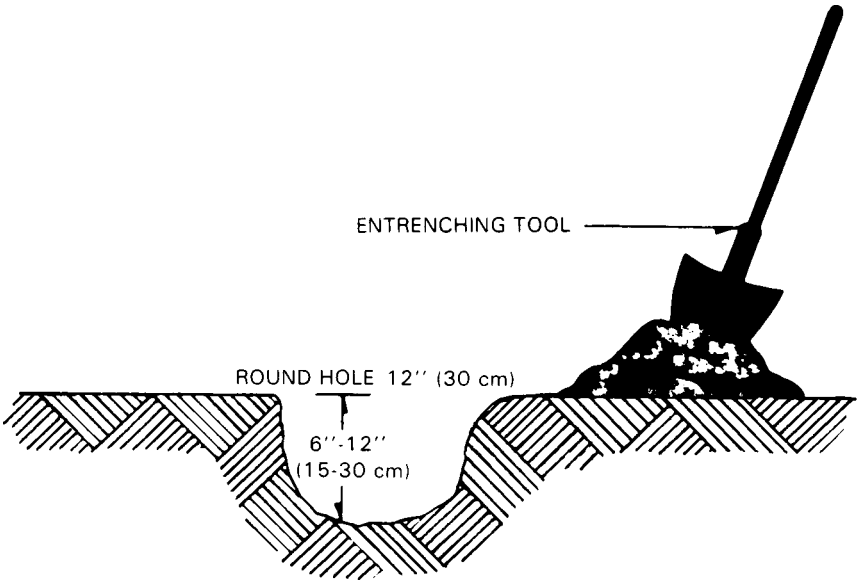

Figure B-12. "Cat-hole" latrine.

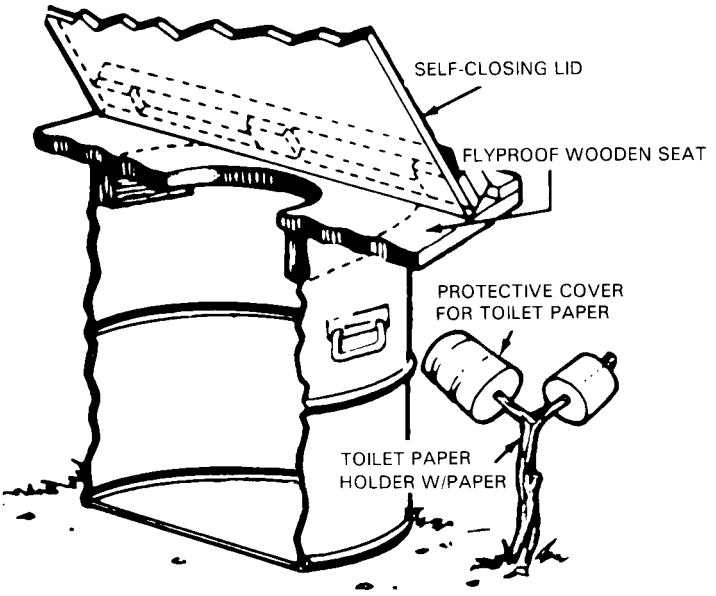

Figure B-13. Burn-out latrine.

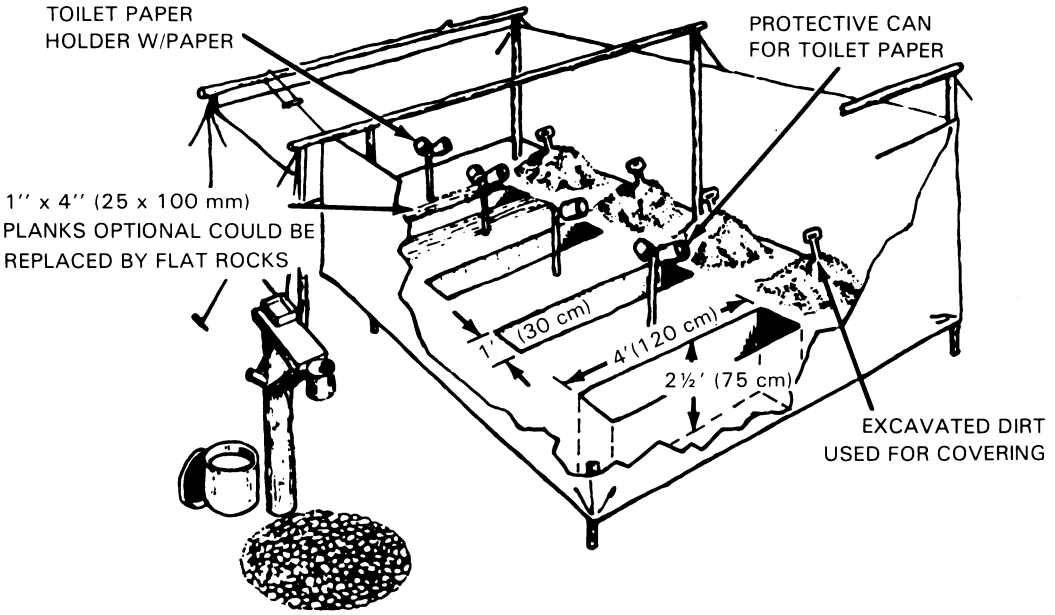

Figure B-14. Straddle trench with latrine screen and handwashing device.

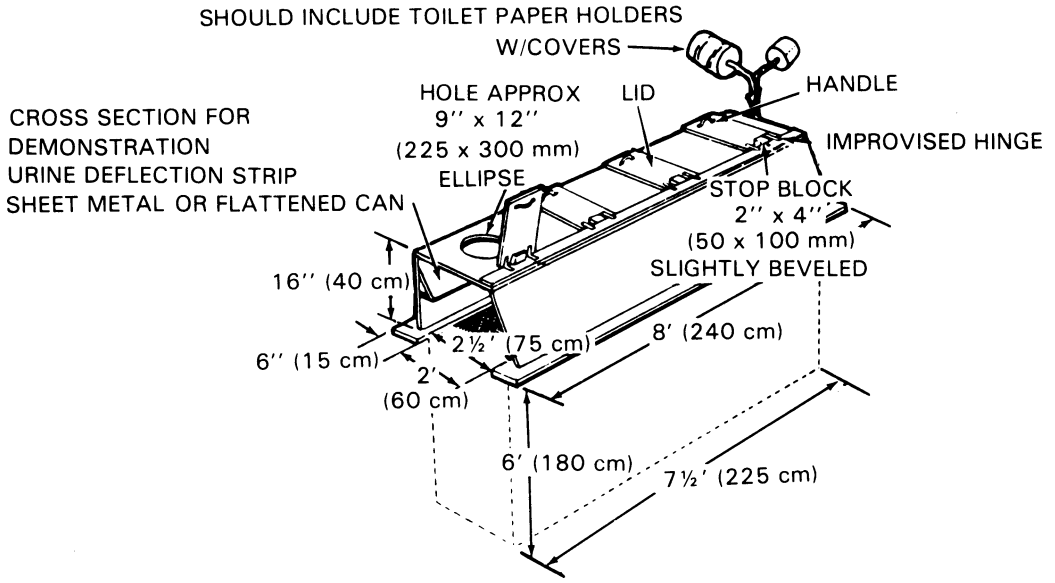

Figure B-15. Deep-pit latrine.

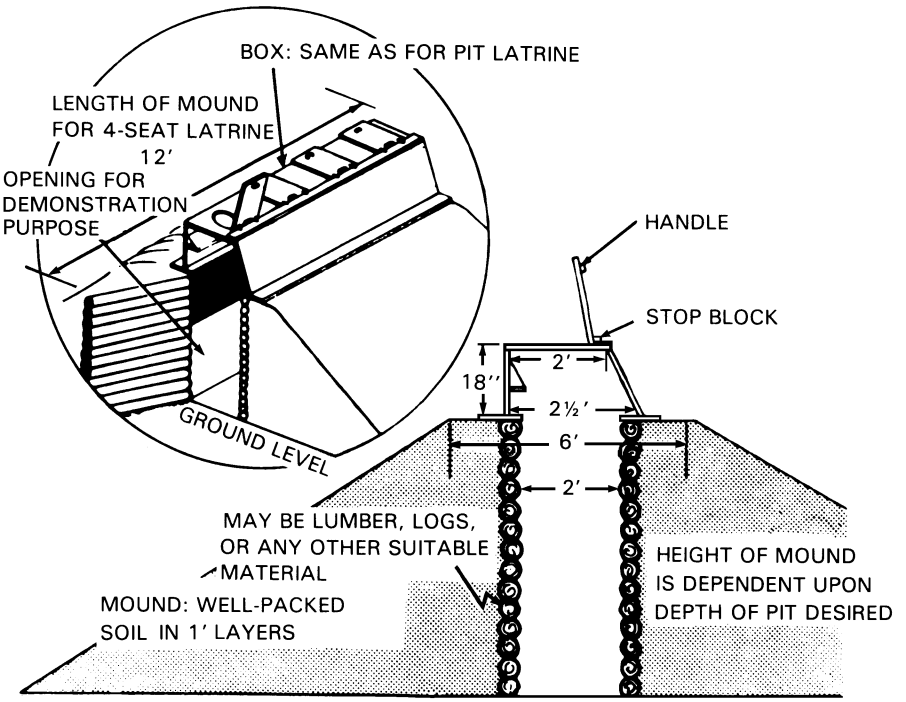

Figure B-16. Mound latrine.

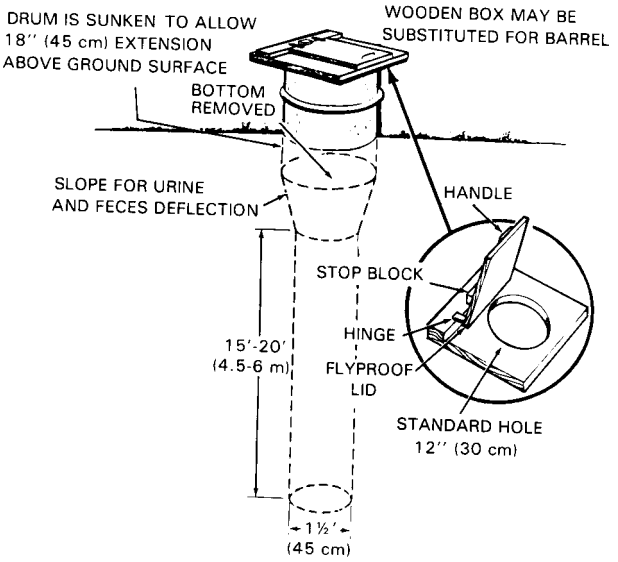

Figure B-17. Bored-hole latrine.

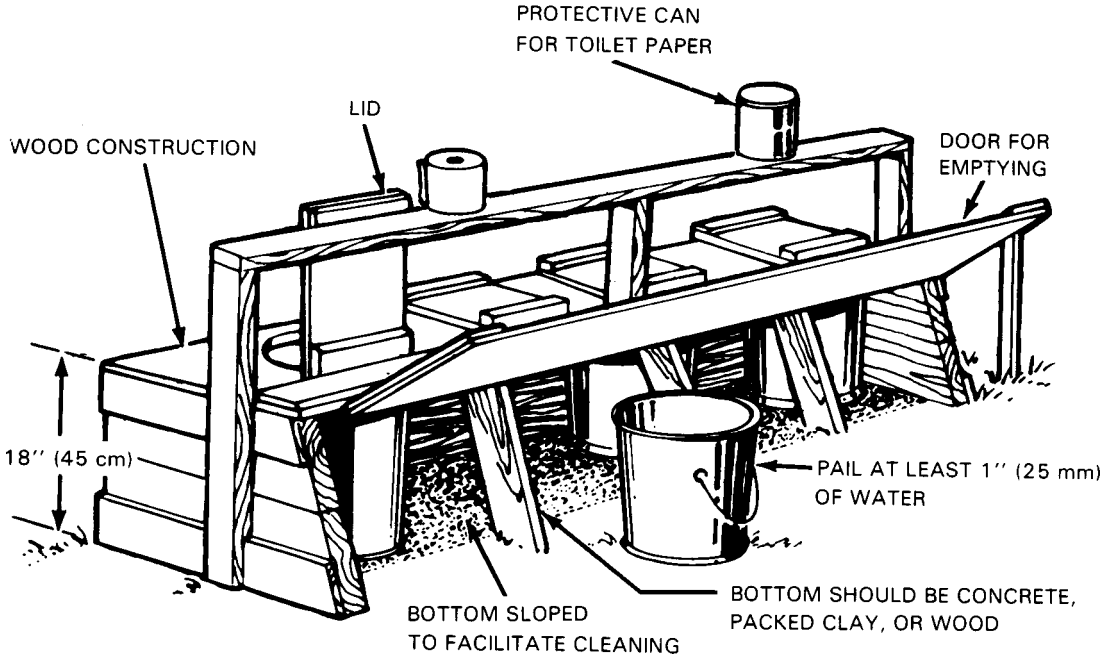

Figure B-18. Pail latrine.

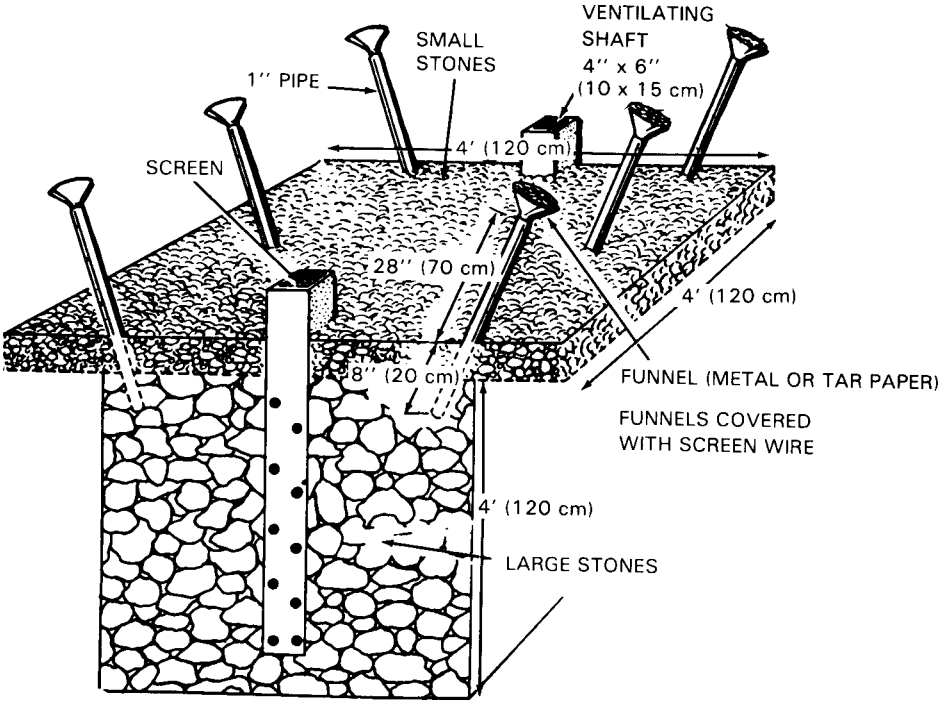

Figure B-19. Urine soakage pit.

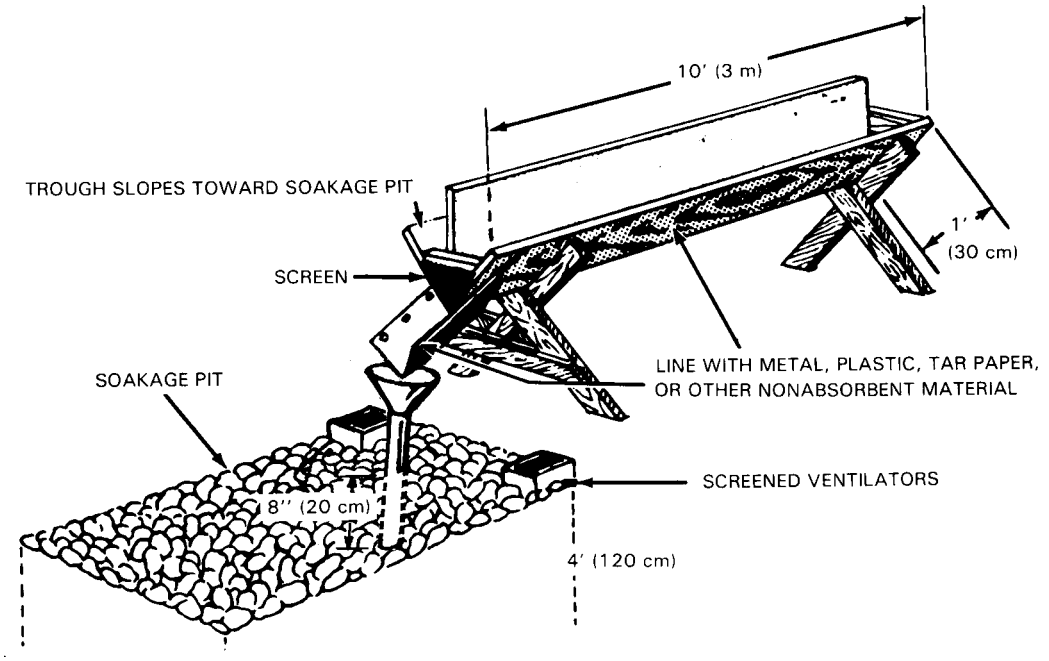

Figure B-20. Trough urinal.

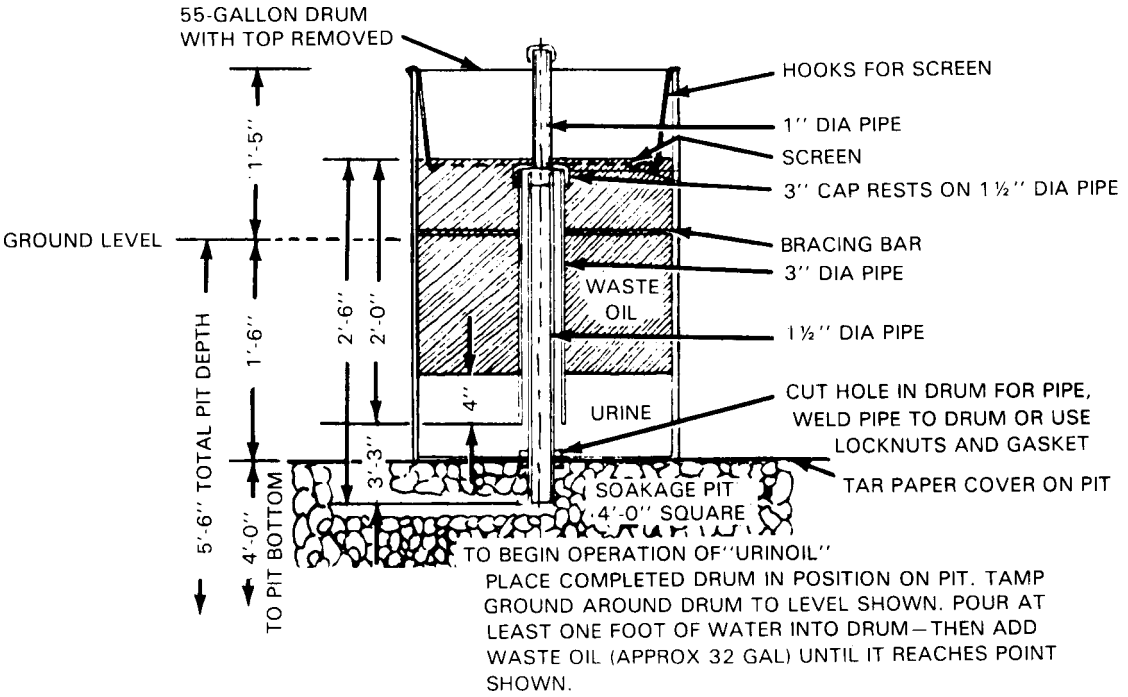

Figure B-21. Urinol Urinal.

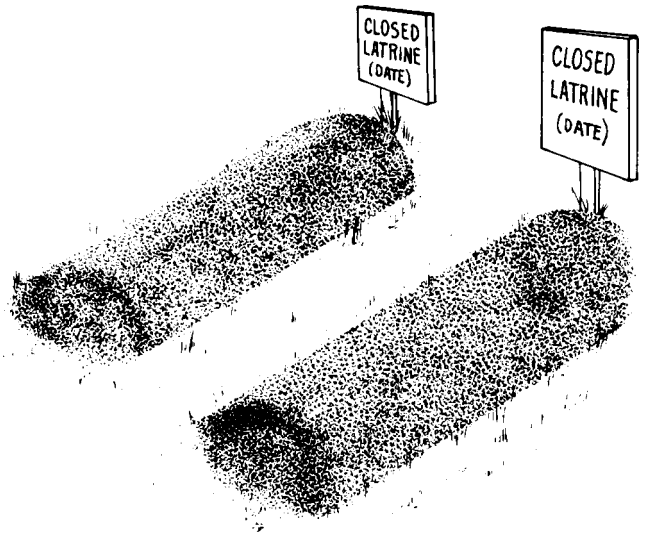

NOTE: MOUNDS SHOULD BE AT LEAST 1' (30 cm) HIGH

Figure B-22. Closed latrines.

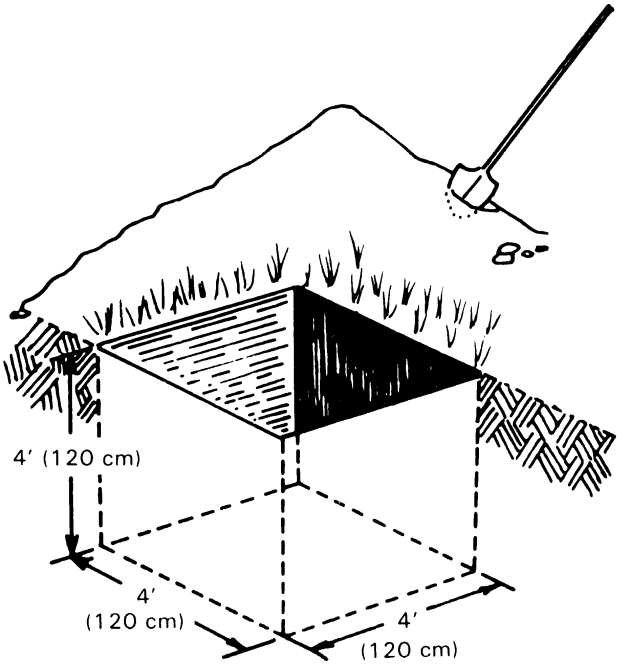

Figure B-23. Garbage burial pit.

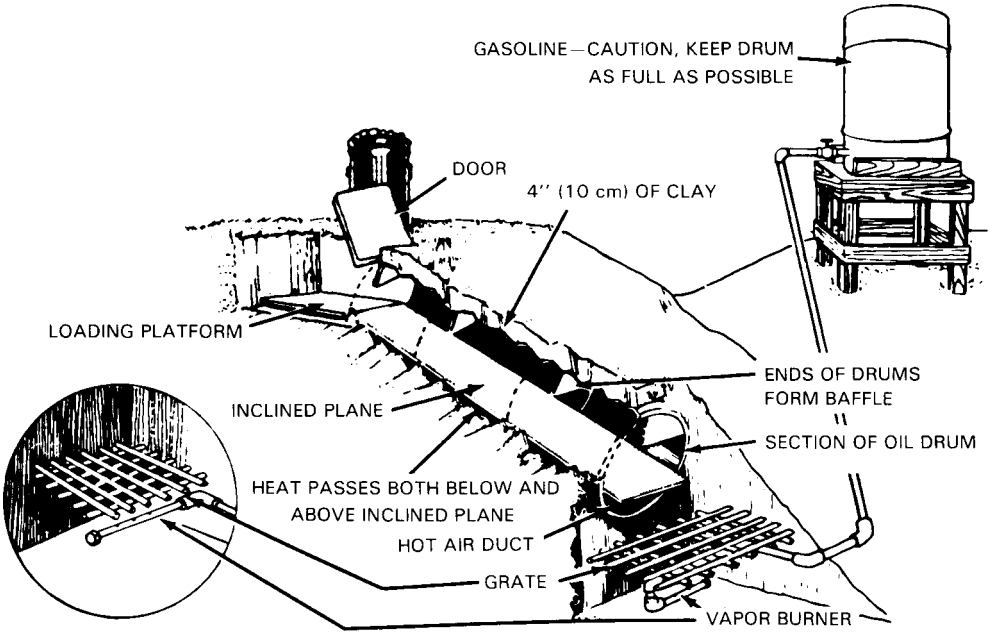

Figure B-24. Inclined-plane incinerator with vapor burner.

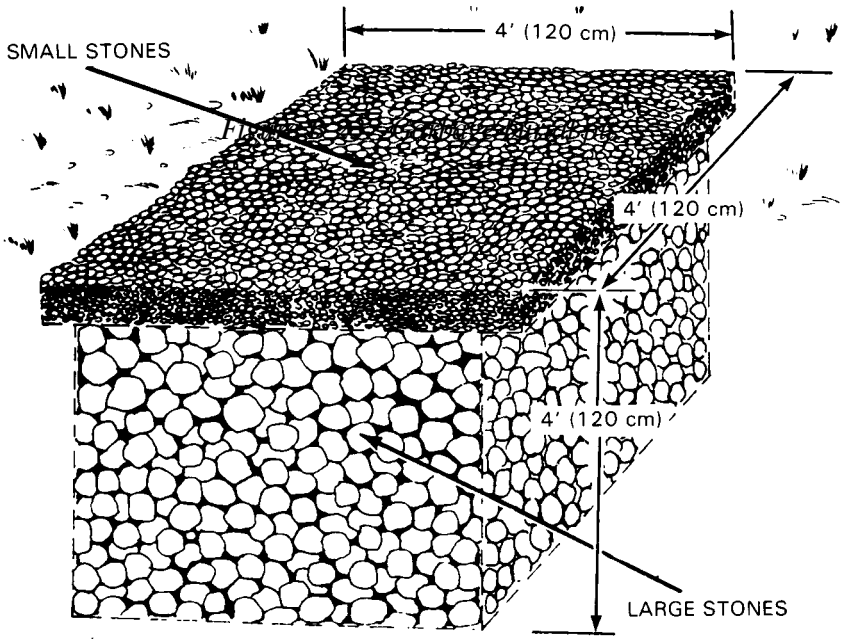

Figure B-25. Soakage pit.

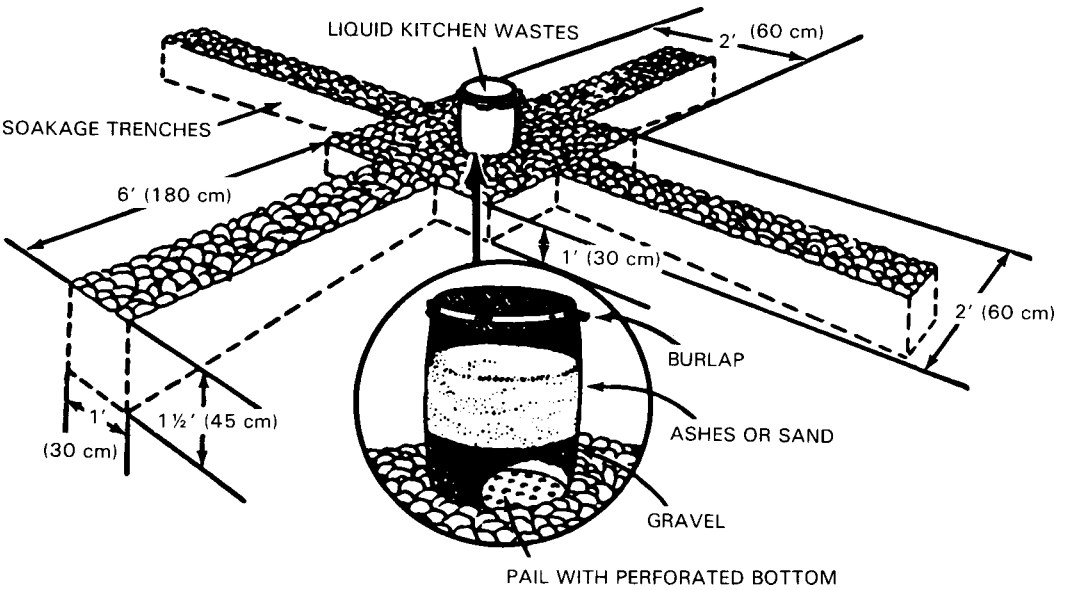

Figure B-26. Soakage trenches with pail grease trap.

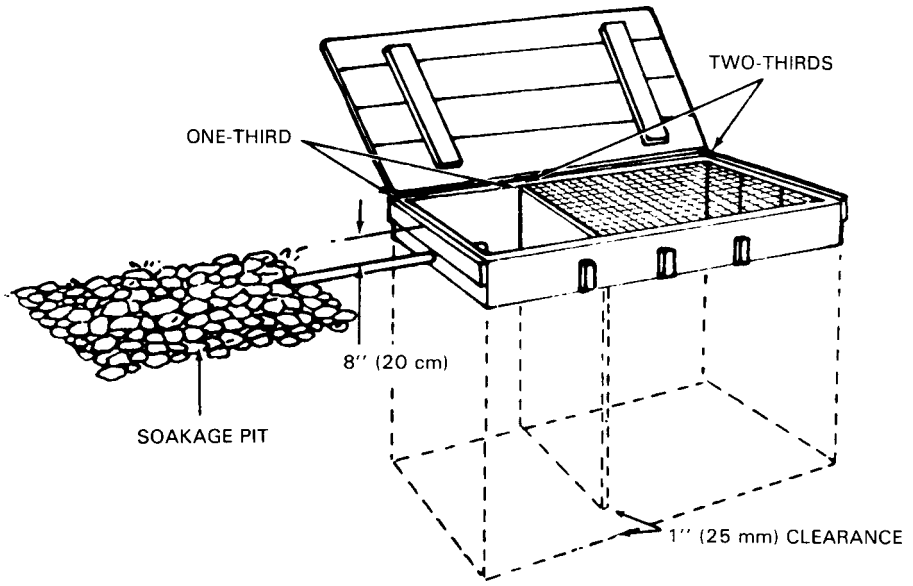

Figure B-27. Filter grease trap.

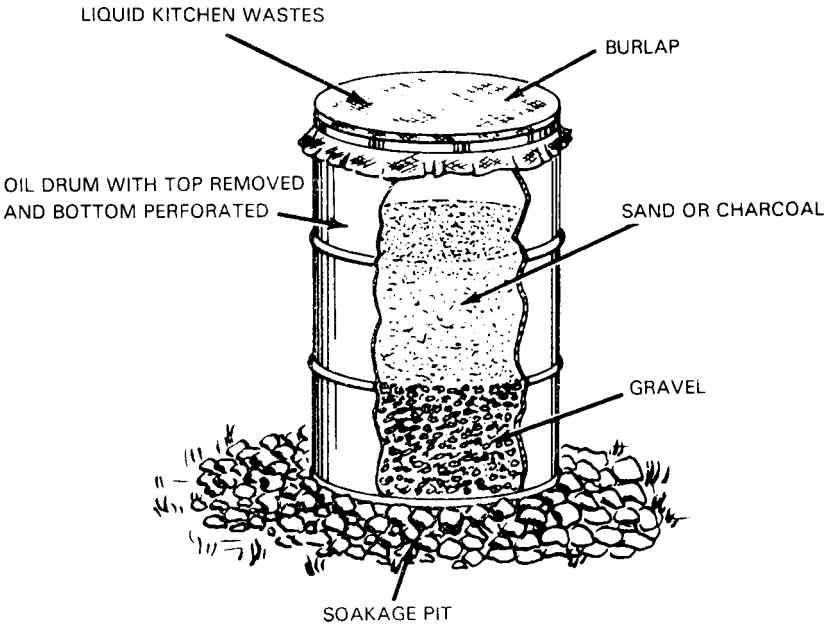

Figure B-28. Baffle grease trap.

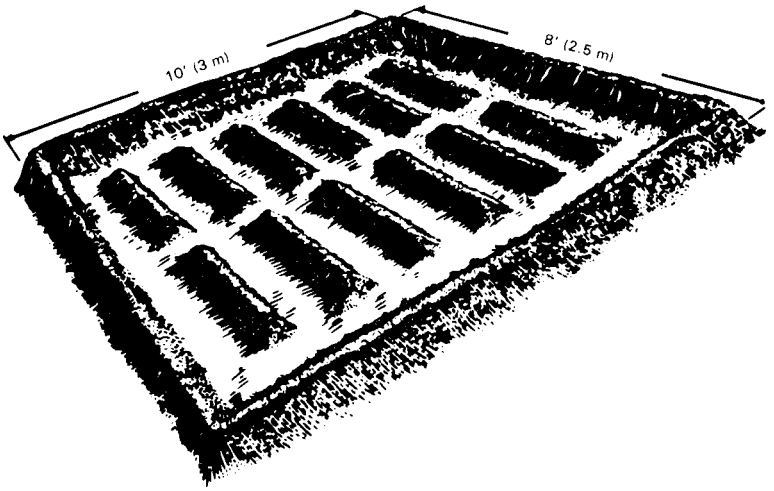

Figure B-29. Evaporation bed.

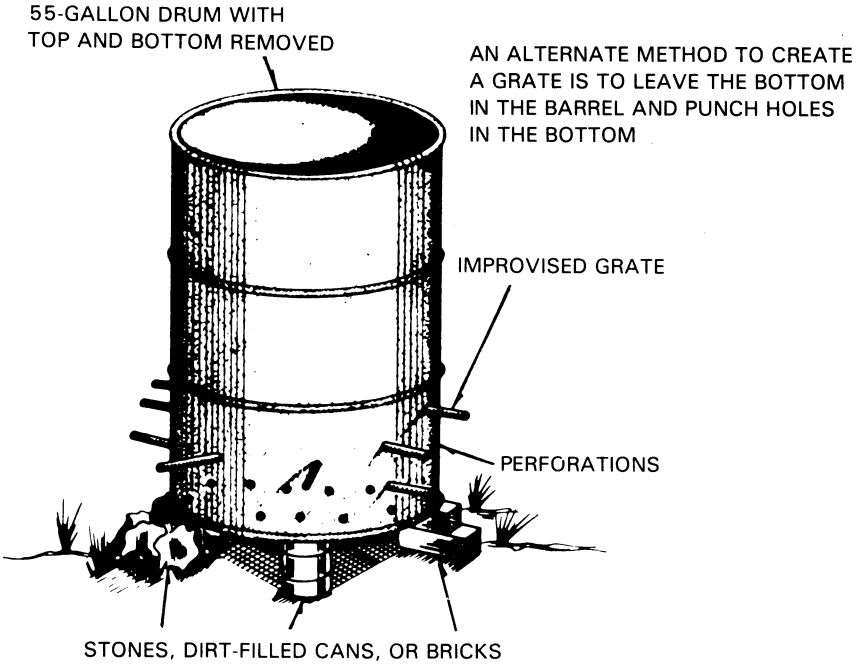

Figure B-30. Barrel incinerator.

APPENDIX C

FIELD SANITATION TEAM MATERIALS

Field Sanitation Team Expendable Items

SUPPLY ITEMS FOR PREVENTION OF HEAT INJURIES

ITEM	NSN	UI	AUTH QTY	CL	REMARKS
Wet Bulb-Globe Temperature (WBGT) Kit (without tripod). See Note 6.	6665-00-159-2218	EA	1/unit	9	Inventory component; replace broken thermometers; clean/replace wick as needed.
WBGT Black Globe Thermometer	6685-01-110-4429	EA	1	9	WBGT component replacement as needed.
WBGT Wet Bulb Thermometer	6685-01-110-4430	EA	1	9	WBGT component replacement as needed.
WBGT Dry Bulb Thermometer	6685-01-110-6563	EA	1	9	WBGT component replacement as needed.
WBGT Wick. See Note 6.		EA	1	9	Use cotton shoestring for replacement.

SUPPLY ITEMS FOR PROVIDING POTABLE WATER

ITEM	NSN	UI	AUTH QTY	CL	REMARKS
*Calcium Hypochlorite, 6 oz jar	6810-00-255-0471	BT	1/50 indiv	2	Check expiration dates quarterly. See Note 1.
Chlorination Kit, Water Purification	6850-00-270-6225	KT	1/15 indiv	2	Check expiration dates quarterly.
Chlorination Kit, Water Purification	6850-01-374-9921	KT	1/15 indiv	2	Check expiration dates quarterly.
Chlorine Test Tablets DPD #1 (100 tablets)	6550-01-044-0315	PG	1	2	Restock Chlorination Kit as needed.
Water Purification Tablet, Chlorine (10 tablets)	6850-01-352-6129	PG	10/indiv	2	Check expiration dates quarterly.
Water Purification Tablet, Iodine, 8 mg (50 tablets)	6850-00-985-7166	BT	2/indiv	2	Check expiration dates quarterly. Randomly open bottles to inspect that tablets are steel grey.

SUPPLY ITEMS FOR PROVIDING FOOD SERVICE SANITATION

ITEM	NSN	UI	AUTH QTY	CL	REMARKS
Alcohol Swabs, Single Pads, 500s	6510-01-153-4638	BX	1/150 indiv	8	
Disinfectant, Food Service (12 packets)	6840-00-810-6396	BX	1/75 indiv	2	Check expiration dates quarterly.
Test Paper, Chlorine Residual (10/package)	6630-01-012-4093	PG	1	2	Check expiration dates periodically.
Thermometer, Food	6685-00-444-6500	EA	2	2	Calibrate as per instruction.

SUPPLY ITEMS FOR PERSONAL PROTECTIVE EQUIPMENT (PPE)

ITEM	NSN	UI	AUTH QTY	CL	REMARKS
Gloves, Chemical and Oil Protective (size 9 or size 11)	8415-01-012-9294 8415-01-013-7384	PR	2/150 indiv	2	Maintain cleanliness; replace when torn.
Goggles, Industrial Non-vented	4240-00-190-6432	EA	2/150 indiv	2	Maintain cleanliness; store to prevent scratching.

SUPPLY ITEMS FOR CONTROL OF ARTHROPODS/RODENTS

ITEM	NSN	UI	AUTH QTY	CL	REMARKS
Chest, #3, 30x18x10 Aluminum	6545-00-914-3480	EA	As required to load	9	See Note 2.
*Insect Repellent, Personal Application, 2 oz tube (12 tubes/BX)	6840-01-284-3982	BX	4 tubes/indiv	9	Visually inspect containers periodically.
*Insect Repellent, Clothing Application IDA Kit (12 kits/BX)	6840-01-345-0237	BX		9	Visually inspect containers periodically.
*Insect Repellent, Clothing and Bednet Treatment, Aerosol, 6 oz can (12 cans)	6840-01-278-1336	BX	1 can/indiv	9	Visually inspect containers periodically.
*Insecticide, Demand Pestab 10% Tablets, Unit Dose (40 tablets/CO)	6840-01-431-3357	CO	1/150 indiv	9	Visually inspect containers periodically. See Note 3.
*Insecticide d-Phenothrin 2% Aerosol, 12 oz	6840-01-412-4634	CN	1/10 indiv	9	Visually inspect containers periodically.
Mouse Trap, Spring Indiv (12 traps/BX)	3740-00-252-3384	DZ	4 dz/150 indiv	9	Maintain/clean as needed.
Rat Trap, Spring	3740-00-260-1398	DZ	4 dz/150 indiv	9	Maintain/clean as needed.
*Rodenticidal Bait Anticoagulant, 0.005% diphacinone (40 blocks/BX)	6840-00-089-4664	BX	1/150 indiv	9	Visually inspect containers periodically.
*Rodenticidal Bait Anticoagulant, 0.005% brodifacdoum (Talon-G) 11 lb. can	6840-01-426-4808	CN	1/150 indiv	9	Visually inspect containers periodically. See Note 2.
*Rodenticidal Bait Anticoagulant, 0.005% bromadiolone, (Maki Pellets) 11 lb can	6840-01-151-4884	CN	1/150 indiv	9	Substitute for 6840-01-4808. Visually inspect container periodically. See Note 2.
Container, Rodent Bait, Plastic, Tamper Proof, capable of dispensing solid or granular bait. Part No. 05830 (6/BX)	3740-01-423-0737	BX	4 dz/indiv	.9	Maintain/store properly as per manual instructions.

SUPPLY ITEMS FOR CONTROL OF ARTHROPODS/RODENTS

ITEM	NSN	UI	AUTH QTY	CL	REMARKS
Sprayer, Insecticide, Manually Carried, 2 gal	3740-00-641-4719	EA	1/150 indiv	9	Maintain/store properly as per manual instruction. See Notes 4 and 5.
Sprayer, Insecticide, Manually Carried, 1 gal	3740-00-191-3677	EA	1/150 indiv	9	Substitute for 3740-00-641-4719. See Notes 4 and 5.
Swatter, Fly	3740-00-252-3383	DZ	1/150 indiv	9	

*Indicates items with special handling requirements

NOTE 1: Pesticides should be properly stored. Additionally, pesticides should be over packed in Air-Transportable Over pack containers to facilitate division into teams. Refer to TM 38-250 for additional guidance on air transportation of pesticides. The International Air Transportation Association's "Shippers Declaration for Dangerous Goods" form must be used for air transport of those pesticides, which are regulated.

NOTE 2: Due to shelf life considerations, DO NOT prestock. Order on a priority basis prior to anticipated deployment. **For emergency procurement: Contact the Defense Supply Center, Richmond (DGSCR) Emergency Supply Operations Center (ESOC) at DSN 695-4865 [commercial (804) 279-4865]. This ESOC is staffed 24 hours, 7 days per week.**

NOTE 3: Demand Pestab replaces Chlorpyrifos, 40 ml bottle (Dursban LO), 6840-01-210-3392. Dursban LO may be used until stocks are exhausted.

NOTE 4: Three sets of repair parts should be acquired for each sprayer. Repair parts will include items such as: check valves, pressure cups, filters, O-rings, four-way nozzles with crack and crevice tips. Repair parts may be ordered from sprayer manufacturer by part number as Class IX repair parts.

NOTE 5: All sprayers should be equipped with a pressure gauge. If not, order a pressure gauge, NSN 3740-01-332-8746, and filter, NSN 4330-01-332-1639, to retrofit the sprayers.

NOTE 6: The Sigma Products and Manufacturing Company, Incorporated, 3324 Blue Jay Pass, Fort Mill, South Carolina 29708, is the single source provider for the following individual replacement parts within the WBGT kit. Some of the items are not listed with NSN and must be ordered directly. To receive specific details and current pricing, contact the company either by their website: www.wetglobe.com, or by calling 1-800-215-0440.

WET BULB GLOBE TEMPERATURE KIT AND REPLACEMENT PARTS

PART NUMBER	DESCRIPTION
601301/t	WBGT Kit with tripod (NSN 6665-01-381-3023)
601301	WBGT Kit (NSN 6665-00-159-2218)
6013-7755	Refurbish Kit (complete internal assembly)
5096-2501	Black Globe Thermometer (NSN 6685-01-110-4429)
5096-2401	Wet Bulb Thermometer (NSN 6685-01-110-4430)

WET BULB GLOBE TEMPERATURE KIT AND REPLACEMENT PARTS (*Continued*)

PART NUMBER	DESCRIPTION
5096-2402	Dry Bulb Thermometer (NSN 6685-01-110-6563)
6013-0143	Airflow Reducer Vial
6013-0145	Water Reservoir
7200-0020	Wicking
6013-0142	Black Cooper Sheath
6013-0199	Tripod
6013-0140	Calculator (NSN 6665-01-109-3246)

APPENDIX D

SAMPLE UNIT STANDING OPERATING PROCEDURE FOR FIELD SANITATION

NOTE: The following sample standing operating procedure (SOP) satisfactorily shows positive actions and specific duties considered suitable for a company-sized unit. Standard operating procedures take a considerable amount of time to develop; they are very detail-oriented. The format, actions, time frames, and techniques are shown as examples only and are not intended to apply in all cases or to all units. For most units, the scope, actions, quantities, and responsibilities need to be adapted to the local commander's requirements throughout all stages of an operation, from predeployment, deployments, site selection, setup, maintenance, recovery and redeployment.

1. References.

a. Army Regulation 40-5, Preventive Medicine.

b. Field Manual 21-10, Field Hygiene and Sanitation.

2. Purpose. To reduce DNBI by ensuring that effective PMM are routinely and habitually practiced under all field conditions.

3. Scope. This SOP specifies for all field exercises and contingencies—

a. The required FST supplies and equipment.

b. The routine, special, and emergency PMM to be taken.

c. The responsibilities for the accomplishment of PMM.

4. Field Sanitation Team. The FST is appointed by the commander as his special representatives to oversee and observe PMM before, during, and after field exercises or contingencies. Because of special training, they know and are authorized to initiate the necessary PMM to reduce DNBI to the lowest possible level. The PMM that will always be accomplished by the designated individual(s) are identified below.

5. Key. The individual(s) with the requirement for performing the indicated PMM task is identified in the ACTION column. The SUPERVISE/FOLLOW-UP column identifies the leader/noncommissioned officer responsible. The individuals are keyed as follows:

AP—Advance Party Leader
CD—Commander
DF—Dining Facility Sergeant
DL—Assigned Detail

1C—First Cook
1S—First Sergeant
FS—Field Sanitation Team
KP—Kitchen Police
ME—The Company Trauma Specialist
SS—Supply Sergeant
UL—All Officers/Noncommissioned Officers

6. Actions and Responsibilities.

	ACTION	SUPERVISE/ FOLLOW-UP
a. Planning and Preparations.		
1. Provide personal PMM instruction to troops.	FS	1S
2. Check supplies, equipment, and loading.	FS	1S
3. Water/water trailer:		
(*a*) Clean/fill/chlorinate/test (5 ppm).	ME	DF
(*b*) Locate QM water point(s).	SS	FS
(*c*) Determine quantity needed.	FS	1S
4. If potentially hazardous food—		
(*a*) Get ice chest(s)/container(s).	DF	1S
(*b*) Locate ice point(s).	SS	FS
(*c*) Take food temperatures.	FS	1S
(*d*) Determine where frozen food will be tempered.	FS	1S
5. Rubbish/garbage.		
(*a*) Provide for containers.	SS	FS
(*b*) Locate disposal point(s).	SS	FS
6. Assure sufficient insect-/rodent-proof food containers.	1C	DF

	ACTION	SUPERVISE/ FOLLOW-UP
7. Plan and train for contingencies in—		
(*a*) Hot temperatures.	1S	CD
(*b*) Cold temperatures.	1S	CD
b. Arrival at Field Site.		
1. Spot/set up dining facility and latrine.	AP	FS
2. Contracting for chemical toilets (1 to 14 days).	DL	FS
3. Dig deep pit (7 plus days).	DL	FS
4. Dig soakage pit (liquid kitchen waste).	DL	DF
5. Spot/set up rubbish/garbage collection points (if no burial).	DL	FS
6. Spot/set up water purification bag.	1S	FS
7. Spot/set up handwashing devices (at dining facility and latrine).	ME	FS
c. Routine Actions.		
1. Set up/boil water in mess kit laundry.	DF	FS
2. Test chlorine residual daily.	FS	ME
3. Chlorinate/disinfect if test fails.	FS	ME
4. Schedule/remove garbage/rubbish (every 2 days).	SS	1S
5. Inspect for/destroy fly/mosquito breeding places.	FS	1S
6. Police food/drink spills to prevent fly-breeding and rodent infestations.	UL	FS
7. Inspect mess kit cleaning.	UL	FS
8. Inspect utensils/ranges/tables/containers after cleanup following meals.	DF	FS

	ACTION	SUPERVISE/ FOLLOW-UP
9. Observe/inspect personal hygiene of troops.	UL	1S
10. Police latrine daily; control flies as required.	DL	FS
d. Special Conditions/Actions.		
1. Foot marches.		
(*a*) Prior to.	UL	1S
(*b*) During and after.	UL	1S
2. Cold temperature (below 50°F/10°C).		
(*a*) Provide for exercise (such as frequent road halts).	UL	1S
(*b*) Instruct on wear/drying of clothing/footwear.	UL	1S
(*c*) Instruct on prevention of trench foot, immersion foot, frostbite, snow blindness, and carbon monoxide poisoning.	ME	FS
(*d*) Provide for and heat latrine.	DL	FS
(*e*) Inspect feet/footwear of troops.	UL	1S
3. Hot temperature (WBGT index over 85).		
(*a*) Obtain WBGT as directed.	ME	FS
(*b*) Schedule work for acclimatization.	1S	CD
(*c*) Provide adequate water.	FS	1S
(*d*) Instruct troops on cause and prevention of heat exhaustion, heatstroke, heat cramps, sunburn, prickly heat, and fungus infections.	ME	UL
e. Emergency Conditions/Actions.		
1. Loss of bath/laundry support.		
(*a*) Intensify personal hygiene inspections/observations.	UL	1S

	ACTION	SUPERVISE/ FOLLOW-UP
(*b*) Provide expedient shower/laundry devices.	DL	FS
(*c*) Inspect troops for body lice 3 weeks after loss of support in cold weather. (Notify medical personnel if body lice are found.)	FS	ME
2. Loss of water-heating capability.		
(*a*) Start use of disinfectant for mess kit laundries and utensils.	DF	FS
(*b*) Provide/improvise expedient water-heating device(s).	DL	FS
(*c*) Intensify personal hygiene inspections/ observations.	UL	1S
f. Departure and Return from Field Site.		
1. Close latrines, soakage pits.	UL	1S
2. Clean, repair, reorder, replace, and store equipment/ supplies as required.	UL	1S

GLOSSARY

ACRONYMS AND ABBREVIATIONS

ABCA American, British, Canadian, and Australian

AMEDD Army Medical Department

AMEDDC&S Army Medical Department Center and School

AO area of operations

AOC area of concentration

AR Army regulation

attn attention

auth authorized

bt bottle

bx box

C Celsius

Ca calcium

cl class

cm centimeter

cn can

co container

CTA common table of allowance

CVC combat vehicle crew

DA Department of Army

dB decibel

DEET 75 percent N, N-diethyl-M-tolumide

dia diameter

DNBI disease and nonbattle injury

DOD Department of Defense

DPD N, N-diethyl-p-phenylene-diamine

DRMO Defence Marketing and Utilization Office

DZ dozen

ea each

ECWCS Extended Cold Weather Clothing System

F Fahrenheit

FAC free available chlorine

FM field manual

FSC food sanitation center

FST field sanitation team

ft foot/feet

gal gallon

IAW in accordance with

IDAA Individual Dynamic Absorption Application

in inch

indiv individual

JP4 jet propulsion fuel, grade 4

kg kilogram

km kilometer

kt kit

l liter

lb pound

m meter

mg/l milligrams per liter

mm millimeter

MOS military occupational specialty

MRE meals, ready-to-eat

MSDS Material Safety Data Sheets

NATO North Atlantic Treaty Organization

NBC nuclear, biological, and chemical

NSN national stock number

oz ounce

pg package

pH symbol relating the hydrogen ion activity in gram equivalents per liter used in expressing both acidity and alkalinity on a scale whose values run from 0 to 14 with 7 representing neutrality. Numbers less than 7 indicate increasing acidity, and numbers greater than 7 indicate increasing alkalinity.

PHF potentially hazardous food

PMCS preventive maintenance checks and services

PMM preventive medicine measures

ppm parts per million

pr pair

psi pounds per square inch

PVNTMED preventive medicine

QM Quartermaster

QSTAG Quadripartite Standardization Agreement

qt quart(s)

qty quantity

RO reverse osmosis

ROWPU reverse osmosis water purification unit(s)

S4 Logistics Officer (US Army)

SB Supply Bulletin

SOP standing operating procedure

STANAG standardization agreement

TB technical bulletin

TIC toxic industrial chemical

TIM toxic industrial material

TM technical manual

TOE table(s) of organization and equipment

UGR Unitized Group Rations

UI unit of issue

US United States

WBGT wet bulb globe temperature

REFERENCES

During the development of this publication, the information from the following was used and, in some instances, quoted or paraphrased as necessary to complete the text. The intended users of this publication need these references as background general knowledge. They should be fully aware of each of these sources in order to conduct the training described in the lesson plans (mentioned in Appendix A) for which this publication is a "hands-on" ready-reference.

NATO STANAGs

These agreements are available on request using DD Form 1425 from Standardization Document Order Desk, 700 Robin Avenue, Building 4, Section D, Philadelphia, Pennsylvania 19111-5094.

2048. *Chemical Methods of Insect and Rodent Control—AMedP-3. Edition 2*. 4 October 1982. (Latest Amendment, 10 September 1986.)
2122. *Medical Training in First-Aid, Basic Hygiene, and Emergency Care. Edition 2*. 10 December 1975. (Latest Amendment, 7 January 1999.)
2136. *Minimum Standards of Water Potability in Emergency Situations. Edition 3*. 27 July 1994. (Latest Amendment, 7 September 1995.)
2885. *Emergency Supply of Water in War. Edition 3*. 13 May 1996. (Latest Amendment, 1 October 1997.)
2899. *Protection of Hearing. Edition 2*. 19 October 1987. (Latest Amendment, 18 July 1995.)
2981. *Prevention of Cold Injury. Edition 1*. 5 January 1987. (Latest Amendment, 24 September 1991.)

ABCA QSTAGs

These agreements are available on request using DD Form 1425 from Standardization Document Order Desk, 700 Robin Avenue, Building 4, Section D, Philadelphia, Pennsylvania 19111-5094.

245. *Minimum Requirements for Water Potability (Short and Long Term Use). Edition 2*. 10 September 1985.
889. *Essential Field Sanitary Requirements. Edition 1*. 27 September 1988. (Latest Amendment, 27 February 1990.)

Joint and Multiservice Publications

TB MED 81. *Cold Injury*. NAVMED P–5052-29; AFP 161-11. 30 September 1976.
TB MED 507. *Occupational and Environmental Health: Prevention, Treatment, and Control of Heat Injury*. NAVMED P-5052-5; AFP 160-1. 25 July 1980.
TM 5-632. *Military Entomology Operational Handbook*. NAVFAC MO-310; AFM 9-16. 1 December 1971. (Reprinted with basic including Changes 1—2, January 1976.)
TM 38-250. *Preparing Hazardous Materials for Military Air Shipments*. AFJM 24-204; NAVSUP PUB 505; MCO P4030.19G; DLAI 4145.3. 1 March 1997.

Army Regulations (AR)

40-5. *Preventive Medicine*. 15 October 1990.
71-32. *Force Development and Documentation—Consolidated Policies*. 3 March 1997.
200-1. *Environmental Protection and Enhancement*. 21 February 1997.

Common Tables of Allowances (CTA)

8-100. *Army Medical Department Expendable/Durable Items*. 31 August 1994.
50-909. *Field and Garrison Furnishings and Equipment*. 1 August 1993.
50-970. *Expendable/Durable Items (Except: Medical, Class V, Repair Parts and Heraldic Items)*. 21 September 1990.

Department of the Army Pamphlets (DA Pam)

40-501. *Hearing Conservation Program*. 10 December 1998.
40-503. *Industrial Hygiene Program*. 30 October 2000.

Field Manuals (FM)

4-02-17. *Preventive Medicine Services*. 28 August 2000.
8-34. *Food Sanitation for the Supervisor*. 30 December 1983.
8-250. *Preventive Medicine Specialist*. 27 January 1986. (Reprinted with basic including Change 1, 12 September 1986.)
8-500. *Hazardous Materials Injuries: A Manual for Prehospital Care (Third Edition)*. 17 January 1997.
10-23. *Basic Doctrine for Army Field Feeding and Class I Operations Management*. 18 April 1996.
10-52. *Water Supply in Theaters of Operations*. 11 July 1990.
21-10. *Field Hygiene and Sanitation*. 21 June 2000.
25-4. *How to Conduct Training Exercises*. 10 September 1984.
25-100. *Training the Force*. 15 November 1988.
25-101. *Battle Focused Training*. 30 September 1990.
100-14. *Risk Management*. 23 April 1998.

Supply Bulletin (SB)

3-40. *Pesticides*. 15 November 1995.

Technical Bulletins—Medical (TB MED)

TB MED 530. *Occupational and Environmental Health: Food Service Sanitation*. 28 November 1991.
TB MED 576. *Occupational and Environmental Health: Sanitary Control and Surveillance of Water Supplies at Fixed Installations*. 15 March 1982.
TB MED 577. *Occupational and Environmental Health: Sanitary Control and Surveillance of Field Water Supplies*. 7 March 1986.

Other

Armed Forces Pest Management Board Technical Information Memorandum, No. 36, *Personal Protective Techniques Against Insects and Other Arthropods of Military Significance*. 15 March 2001. This memorandum is available at www.acq.osd.mil/afpmb.

INDEX

References are to paragraph numbers except those in boldface type are to page numbers.

ABCA. *See* American, British, Canadian, and Australian.
AMEDD. *See* Army Medical Department.
American, British, Canadian, and Australian, **iv**
Army Medical Department, **iv**, 2-7*a—b*, **A-1**, **A-21**, **A-30**
    Center and School, **iii**, **A-1**
arthropod, 2-2, 2-4*b*, 2-28—33, **A-48—67**
    biting, 2-29*a*
    bloodsucking, 2-29*a*(1)(*a*)
    borne disease/illness, 2-1*a*, 2-4*a*(6), 2-28—30, **A-6**, **A-9**, **A-48—53**
        dengue fever, 2-30*c*
        malaria, 2-1, 2-30
        yellow fever, 2-30*b*
    control, **1-3**, 2-4*b*, 2-31—33, **A-54—66**, **C-2**
    disease, **1-3**, 2-2*b*(2), 2-28—30
        transmission, 2-28, 2-35*d*
    habitat, **A-49—51**, **A-53**, **A-62**, **A-68—69**, **A-72**
    life cycles, 2-31, **A-49—50**, **A-68—69**, **A-72**
    nonbloodsucking, 2-29*a*(1)(*b*)
    preventive medicine measures, **1-3**, 2-32, **A-54—60**
    repellent systems, 2-32*a*, **A-54**
    stinging, 2-29*b*
    vectors, **A-52**

blisters, **A-13—15**

calcium hypochlorite, 2-10*b—d*, **A-23**, **A-26—28**, **A-38**, **A-110—111**
carbon monoxide, 2-52*b*, 2-53, 2-55, **A-90—99**
chemical(s)
    action and effects of, 2-52
    bore/gun gases, 2-55, **A-91**, **A-95**
    carbon monoxide, 2-52*b*, 2-53, 2-55, **A-90—99**
    control, 2-33, 2-40*f*
    hydrogen chloride, 2-54
    latrines, 2-23*a—c,* **B-7—8**
    liquid, 2-56
    pesticide, 2-32—33, 2-39, **A-63**
    poisoning, **A-94**
    rodent control, 2-40*f*
    toxic industrial, 2-49
        classification, 2-51
        routes of entry, 2-50
Chlor-Floc®, **A-26—28**
chlorination. *See* water.
combat medic, **A-3**

commander's responsibility, 2-2*b*(3)(*a*), 2-21*a*, **A-21**
common table of allowance, **1-3**
contamination of
food, 2-13, 2-15, 2-18, 2-23*a*(1), **A-32—39**
water, 2-23*a*(1), **A-26—29**
cooking
temperatures, 2-11—12, 2-14
utensils, 2-14, 2-16
cleaning and sanitizing, 2-4, 2-14, 2-16—17, **A-31—34**, **A-37—38**
Corps of Engineers, 2-7*b*, **A-21—22**, **A-30**

decibel, 2-59*b*, **A-105**
DEET, 2-2*b*(2), 2-32*a—b,* 2-40*h*(1), **A-55—60**
Department of Defense, **iv**
Insect Repellent System, 2-2*b*(2), 2-32*a,* **A-60**
diarrheal disease, 2-2*b*(3), **A-6**
disease(s)
and nonbattle injury, 1-1—2, 1-4, 2-1—2, 2-3*b,* **A-2**, **A-5—6**, **A-8**, **A-109**, **D-1**
arthropodborne, 2-1*a*, 2-4*a*(6), 2-28—30, **A-6**, **A-9**, **A-49**, **A-52—53**
dengue fever, 2-30*c*
malaria, 2-1, 2-30*a*
yellow fever, 2-30*b*
carried by rodents
hantavirus, 2-35*f*
leptospirosis, 2-35*c,* **A-20**
murine typus, 2-35*b*
plague, 2-35*a,* **A-68**, **A-70**
rickettsialpox, 2-35*e*
salmonellosis, 2-35*d,* **A-70**
transmission of, 2-35—37, **A-20**, **A-52—53**
disinfection, **A-23**, **A-27**, **A-37—38**
DPD test kit, 2-10*d*(2), **A-28—29**, **B-5**

ear(s), 2-60, **A-7**
effects of noise on, 2-61, **A-103**
muffs, 2-62, **A-104—105**
plugs, 2-62, **A-105—107**
preventive medicine measures, 2-62, **A-104—107**

field sanitation
devices, 2-2*b*(3), 2-5*a*(1), 2-23, 2-24*b*(2), 2-25*a*(2), **A-9**, **A-36**, **A-44**, **A-63**, **B-1—17**, **D-3**,
expendable items for, **C-1—4**
standing operating procedure (sample), **D-1—5**

field sanitation (*continued*)
team, **iv**, 1-1—4, 2-1, 2-2*b*(3)(*a*), 2-4—5, 2-12, 2-19, 2-33, 2-39, 2-40*f*, 2-48*e*, **A-1—112**, **C-1—4**
duties/role of, 2-4, **A-8—9**, **D-1—5**
equipment and supplies, **A-108—112**
expendable items for, **C-1—4**
training course, **A-1—112**, **B-1—17**

food(s)
borne diseases/illness, 2-11—12, 2-14*b*(1)—(2), **A-32—35**
cold, 2-12, 2-14*b*(2), **A-31—33**
containers, B-1*h*
handlers, 2-15, **A-30—39**
hot, 2-14*b*(2), **A-33**
inspections, 2-19, **A-30—39**
leftovers, 2-16*b*, 2-18, **A-33**
PHF. *See* foods, potentially hazardous.
potentially hazardous, 2-12, 2-14*b*, 2-16*b*, **A-31—39**
service
sanitation, **1-3**, 2-4*a*(2), **A-30—39**, **C-1**
supervisor, 2-15
sanitation center, **A-38**, **B-7**
spoilage, **A-31**
storage, 2-14, **A-34**
temperatures, 2-14, **A-33**, **A-39**
transportation, 2-12—13, **A-35**
utensils, 2-4*a*(2), **A-37**
foot care, **A-13—15**
free available chlorine, 2-8*f*—*g*, 2-10*b*, 2-10*c*(4)(*b*), 2-10*e*

garbage disposal, 2-24, **B-14—17**

hydrogen chloride, 2-54, **A-91**, **A-94**
symptoms of exposure to, **A-97—98**

injury(ies)
cold weather, **1-4**, 2-5*b*, 2-46—48, **A-6**, **A-80—88**
categories of, 2-46, **A-81—82**
cramps, 2-43*a*
environment, 2-41*b*, **A-83**
exhaustion, 2-43*b*
factors, 2-47, **A-82**
field sanitation team role in prevention of, **A-85—88**
frostbite, 2-5*b*, 2-46*a* and *e*, 2-47*b*(1) and *c*, 2-48*d*, **A-87**
hypothermia, 2-5*b*, 2-46*a* and *e*—*f*, **A-82**
personal measures, 2-48*e*
prevention of, 2-48, **A-80—88**
soldier's individual role in prevention of, **A-87**

injury(ies) (*continued*)
heat, **1-4**, 2-2*b*, 2-41—45, **A-73—80**
acclimatization, 2-44*c,* **A-75**
factors leading to, 2-42
prevention of, 2-44, **A-73—80**
types of, 2-43
cramps, 2-43*a*, A-74
exhaustion, 2-43*b*, A-74
stroke, 2-43*c*, **A-75**
iodine tablets, **A-26—27**, B-1

latrines, 2-23, **A-41—43**, **B-7—13**
lesson plans, **A-1—112**
Lyster bag, 2-10*c*(1)(*a*), B-1*d*, **B-5**

malaria, 2-1, 2-30, **A-6**, **A-49**, **A-52**
meals, ready-to-eat, 2-10*c*(2)(*c*), **A-34**
medical threat, 2-2, **A-4—10**
mental health concepts, **A-16**
MRE. *See* meals, ready-to-eat.

NATO. *See* North Atlantic Treaty Organization.
noise hazards, **1-4**, 2-4*a*(9), 2-58—62, **A-101—108**
protective measures, 2-62, **A-101—108**
North Atlantic Treaty Organization, **iv**
nutritional elements, **A-15—18**

personal
cleanliness, 2-5, **A-8**, **A-12**
hygiene, **1-2**, 2-5, 2-15, **A-8**, **A-10—18**
PMM. *See* preventive medicine measures.
potentially hazardous food, 2-12, 2-14*b*, 2-16*b*, **A-31—39**
preventive medicine measures, **1-1—4**, 2-1—62, **A-1—112**
cold injury, 2-48, **A-80—88**
ear(s), 2-60, 2-62, **A-104—108**
effects of noise on, 2-61, **A-103**
muffs, 2-62, **A-104—105**
plugs, 2-62, **A-105—106**
foot care, **A-13—15**
heat injury, 2-44, **A-73—80**

QSTAG. *See* Quadripartite Standardization Agreement.
Quadripartite Standardization Agreement, **iv**, 2-6
Quartermaster Corps, 2-7*c*, **A-21**

rechlorination, 2-10*c*(2)(*b*)—(*c*), **A-26—27**
reverse osmosis water purification unit, 2-10, **A-23—29**
rodent(s)
control measures, 2-4, 2-40, **A-67—72**
bait station, 2-40*g*
chemicals, 2-40*f*
eliminating food source, 2-40*b*—*c*
pesticide application, 2-39*b*, **A-64—66**
surveys, 2-40*a*
traps, 2-4*b*(5), 2-38*c,* 2-40*e* and *h*(4), **A-71**
diseases carried by
hantavirus, 2-35*f*
leptospirosis, 2-35*c,* **A-20**
murine typus, 2-35*b*
plague, 2-35*a,* **A-68**, **A-70**
rickettsialpox, 2-35*e*
salmonellosis, 2-35*d,* **A-70**
disposal of dead, 2-40*h*, **A-72**
ROWPU. *See* reverse osmosis water purification unit.

STANAGs. *See* standardization agreements.
standardization agreements, **iv**, 2-4, 2-6, 2-31
standing operating procedure, **D-1—5**

TIC/TIM. *See* toxic industrial, chemicals; materials.
toxic industrial
chemicals, 2-4*a*, 2-49, 2-52, **A-60—66**, **A-96**
routes of entry, 2-50
absorption, 2-50*b*
ingestion, 2-50*c*
inhalation, 2-50*a*
injection, 2-50*d*
materials, 2-4*a*, 2-49, **A-7**, **A-89—101**
biologic effects of, **A-93**
gaseous form of, **A-95—96**
liquid form of, **A-95—96**
medical threat of, **A-94**
physical status of, **A-90—92**
routes of entry in a body, 2-50—51, **A-92—93**

UGR. *See* Unitized Group Rations.
unit field
bivouac, **A-9**
waste disposal, **A-9**, **A-40—47**

Unitized Group Rations, **A-34**
urine disposal facilities, 2-23, **A-40—47**, **B-7—13**

waste
disposal, 2-21—2-23, **A-40—48**
methods, 2-22, **A-41**
evaporation beds, 2-25*a*(4), **A-44**, **B-17**
facilities, **B-1**, **B-7—B-17**
garbage, 2-24, **A-45**, **B-14**
grease, 2-25*a*(3), **A-44**, **B-15—16**
hazardous, 2-27
human
latrines, 2-23, **A-41—43**, **B-7—13**
urinals, 2-23, **A-40—47**, **B-7—13**
JP4, 2-23*c*(1)(*b*)
liquid, 2-25, **A-41**, **A-43**, **B-16—17**
rubbish, 2-26, **A-41**, **A-45**

water, 2-43*a,* **A-18—29**
boiling, 2-10*c*(7), **A-27—28**, **A-38**
borne disease, 2-6*b*, **A-20**
bottled, **A-29**
chlorination, 2-8*e*, **A-20**, **A-23**
dosage, 2-8*f*, **A-19**
kit, **A-28**, **B-5**
residual, 2-8*h*, 2-10*d*, **A-19**, **A-23**, **A-28**
coliform bacteria, 2-6*b*, **A-20**
color comparator, 2-10*d*, **A-28**, **B-5**
containers, 2-7, 2-10*c*(4), **A-24—25**
contamination, 2-6*b*
disinfection of, 2-4*a*(1), 2-8*d*, 2-10*b*—c
filtration, 2-10, **A-23**
ground, 2-9, **A-22**
handwashing device, 2-5, 2-23*a*(1), **B-3**
human consumption, 2-6*a*, 2-9, **A-20—21**
palatable, 2-8*a*, **A-19—23**
potable, 2-2*c*, 2-6*a*, 2-7, 2-8*b*, 2-18, **A-19—21**, **A-24**, **C-1**
purification methods, 2-4*a*(1), **A-23—29**
quality of, 2-6*c*
rechlorination, 2-10*c*(2), **A-26—27**
requirements, 2-6, 2-44, **A-21**
cold climate, 2-6*c*(1)
hot climate, 2-6*c*(2)
rules of water discipline, 2-7*d,* **A-21**
sea, 2-9, **A-22**

water (*continued*)
shower, 2-3, 2-5—6, **A-21**, **B-4**
sources of, 2-9*a—f*, 2-20, **A-22**
storage, A-23
supply, **1-3**, 2-1*c*, 2-6—10, **A-8**, **A-18—30**
surface, 2-9, 2-23*a*(1), **A-23**
trailer, 2-7*c*, 2-10*c*(2) and *e*, 2-40*c*(1), **A-23**, **B-1**
treatment, 2-8*c* and *e*, 2-10, **A-23**
WBGT. *See* wet bulb globe temperature.
wet bulb globe temperature, 2-44*c* and *h*, 2-45, **A-78—79**, **C-1—4**
windchill, 2-47*c*, 2-48*b*, **A-87—88**
work schedules, 2-44*e*

yellow fever, 2-30*b*

FM 4-25.12 (FM 21-10-1)
25 JANUARY 2002

By Order of the Secretary of the Army:

ERIC K. SHINSEKI
General, United States Army
Chief of Staff

Official:

JOEL B. HUDSON
Administrative Assistant to the
Secretary of the Army
0200201

DISTRIBUTION:

Active Army, Army National Guard, and US Army Reserve: To be distributed in accordance with the initial distribution number 114542 for FM 4-25.12.