FM 4-02.6 (FM 8-10-1)

THE MEDICAL COMPANY

TACTICS, TECHNIQUES, AND PROCEDURES

AUGUST 2002

HEADQUARTERS, DEPARTMENT OF THE ARMY

DISTRIBUTION RESTRICTION: Approved for public release; distribution is unlimited.

FIELD MANUAL
NO. 4-02.6 (8-10-1)

HEADQUARTERS
DEPARTMENT OF THE ARMY
Washington, DC, 1 August 2002

THE MEDICAL COMPANY
TACTICS, TECHNIQUES, AND PROCEDURES

TABLE OF CONTENTS

			Page
PREFACE			vii
CHAPTER	**1.**	**COMBAT HEALTH SUPPORT SYSTEM**	1-1
Section	**I.**	**Overview of Combat Health Support**	1-1
	1-1.	General	1-1
	1-2.	Theater of Operations	1-1
	1-3.	Mission	1-2
	1-4.	Echelons of Medical Care	1-2
	1-5.	The Medical Threat and Medical Intelligence	1-4
	1-6.	Planning for Combat Health Support	1-5
	1-7.	Principles of Combat Health Support	1-7
	1-8.	Modular Medical Support System	1-8
Section	**II.**	**Combat Health Support Functional Areas**	1-9
	1-9.	General	1-9
	1-10.	Medical Treatment	1-9
	1-11.	Medical Evacuation and Medical Regulating	1-10
	1-12.	Hospitalization	1-11
	1-13.	Combat Health Logistics	1-12
	1-14.	Dental Services	1-12
	1-15.	Veterinary Services	1-13
	1-16.	Preventive Medicine Services	1-13
	1-17.	Combat Operational Stress Control Services	1-13
	1-18.	Medical Laboratory Services	1-14
CHAPTER	**2.**	**THE MEDICAL COMPANY**	2-1
Section	**I.**	**The Medical Company and Division Overview**	2-1
	2-1.	General	2-1
	2-2.	Division Overview	2-1
	2-3.	Types of Divisions	2-1
	2-4.	Forward Support Medical Company	2-3
	2-5.	Organizational Structure of Forward Support Medical Companies	2-4

DISTRIBUTION RESTRICTION: Approved for public release; distribution is unlimited.

---

*This publication supersedes FM 8-10-1, 29 December 1994.

			Page
	2-6.	Main Support Medical Company/Division Support Medical Company	2-9
	2-7.	Organizational Structure of Main Support Medical Company/Division Support Medical Company	2-10
Section	**II.**	**Medical Companies in Separate Brigades, Armored Cavalry Regiments, and Interim Brigade Combat Teams**	2-15
	2-8.	Separate Brigade Overview	2-15
	2-9.	Medical Company-Heavy Separate Brigade	2-16
	2-10.	Organizational Structure and Tactical Capabilities of the Medical Company-Heavy Separate Brigade	2-16
	2-11.	Armored Cavalry Regiment Overview	2-17
	2-12.	Medical Troop-Armored Cavalry Regiment	2-18
	2-13.	Organizational Structure and Tactical Capabilities of the Medical Troop-Armored Cavalry Regiment	2-18
	2-14.	Brigade Combat Team Overview	2-19
	2-15.	Brigade Support Medical Company, Support Battalion, Interim Brigade Combat Team	2-19
	2-16.	Area Support Medical Company, Area Support Medical Battalion (Corps and Echelons above Corps)	2-20
CHAPTER	**3.**	**MEDICAL COMPANY OPERATIONS**	3-1
Section	**I.**	**Organization and Functions of the Medical Company**	3-1
	3-1.	General	3-1
	3-2.	Headquarters Section	3-1
	3-3.	Treatment Platoon	3-3
	3-4.	Ambulance Platoon	3-6
	3-5.	Preventive Medicine Section and Functions	3-7
	3-6.	Mental Health Section Operations and Functions	3-8
	3-7.	Optometry Section Operations and Functions	3-11
Section	**II.**	**Tactical Employment of the Medical Company**	3-11
	3-8.	Employment of the Medical Company	3-11
	3-9.	Site Selection	3-12
	3-10.	Establishing the Company Headquarters	3-15
	3-11.	Command Post Operations	3-17
	3-12.	Employment of the Treatment Platoon	3-19
	3-13.	Establishing the Clearing Station/Medical Treatment Facility	3-19
	3-14.	Employment of the Ambulance Platoon	3-22
	3-15.	Divisional and Nondivisional Medical Supply Offices	3-25
	3-16.	Employment of the Preventive Medicine Section	3-25
	3-17.	Employment of the Mental Health Section	3-27
	3-18.	Employment of the Optometry Section	3-27
CHAPTER	**4.**	**COMBAT HEALTH SUPPORT IN SPECIFIC ENVIRONMENTS**	4-1
	4-1.	Introduction	4-1

			Page
	4-2.	Jungle Environment	4-1
	4-3.	Mountain Environment	4-3
	4-4.	Desert Environment	4-5
	4-5.	Extreme Cold Weather Environment	4-8
	4-6.	Nuclear, Biological, Chemical, and Directed-Energy Environments	4-11
	4-7.	Urban Operations	4-12
	4-8.	Combat Health Support During Night Operations	4-14
	4-9.	Army Special Operations Forces	4-17
APPENDIX	**A.**	**LAW OF WAR AND GENEVA CONVENTIONS OBLIGATIONS FOR MEDICAL PERSONNEL**	A-1
	A-1.	Law of War	A-1
	A-2.	Medical Implications of Geneva Conventions	A-1
	A-3.	Distinctive Markings and Camouflage of Medical Facilities and Evacuation Platforms	A-4
	A-4.	Civilian Wounded and Sick	A-5
	A-5.	Captured Medical Supplies	A-6
	A-6.	Compliance with the Geneva Conventions	A-6
APPENDIX	**B.**	**COMBAT HEALTH SUPPORT PLANNING**	B-1
Section	**I.**	**Combat Health Support Estimate**	B-1
	B-1.	General	B-1
	B-2.	Responsibilities	B-1
	B-3.	Format for the Estimate	B-2
	B-4.	Sample Format for the Combat Health Support Estimate	B-2
Section	**II.**	**Combat Health Support Plan**	B-9
	B-5.	General	B-9
	B-6.	Format for the Combat Health Support Plan	B-10
APPENDIX	**C.**	**MASS CASUALTY SITUATIONS**	C-1
	C-1.	General	C-1
	C-2.	Mass Casualty Management	C-1
	C-3.	Triage Categories	C-3
	C-4.	Control Element	C-4
	C-5.	Establishing Triage, Treatment, and Holding Areas	C-5
	C-6.	Patient Accountability	C-6
	C-7.	Medical Evacuation	C-7
	C-8.	Contaminated Patients	C-7
	C-9.	Disposition of Remains	C-7
APPENDIX	**D.**	**MANAGEMENT OF CLASS VIII ITEMS IN THE FORCE XXI DIVISION**	D-1
	D-1.	Class VIII Management	D-1

			Page
	D-2.	Throughput Delivery of Class VIII Items	D-2
	D-3.	Additional Combat Health Logistics Support Information	D-2
APPENDIX	**E.**	**RECORDS AND REPORTS**	E-1
Section	**I.**	**Patient Accountability**	E-1
	E-1.	General	E-1
	E-2.	United States Field Medical Card	E-1
	E-3.	Daily Disposition Log	E-2
	E-4.	Patient Summary Report	E-4
	E-5.	Patient Evacuation and Morality Report	E-4
Section	**II.**	**Blood Management Report**	E-5
	E-6.	General	E-5
	E-7.	Blood Management Report	E-6
APPENDIX	**F.**	**THE BRIGADE SUPPORT MEDICAL COMPANY**	F-1
Section	**I.**	**Organization and Mission**	F-1
	F-1.	Organization Capability and Functions	F-1
	F-2.	Augmentation	F-3
Section	**II.**	**Company Headquarters Organization and Function**	F-3
	F-3.	Company Headquarters	F-3
	F-4.	Command Element	F-4
	F-5.	Logistics Elements	F-5
Section	**III.**	**Employment of the Medical Company**	F-6
	F-6.	Establishment of the Company Headquarters	F-6
	F-7.	Preventive Medicine Section	F-7
	F-8.	Employment of the Preventive Medicine Section	F-9
	F-9.	Mental Health Section	F-10
Section	**IV.**	**The Treatment Platoon**	F-14
	F-10.	General	F-14
	F-11.	Treatment Platoon Headquarters	F-15
	F-12.	Treatment Squad	F-15
	F-13.	Area Treatment Squad	F-17
	F-14.	Area Support Squad	F-19
	F-15.	Patient-Holding Squad	F-21
	F-16.	Employment of the Treatment Platoon	F-22
Section	**V.**	**The Evacuation Platoon**	F-23
	F-17.	General	F-23
	F-18.	Evacuation Platoon Headquarters	F-23
	F-19.	Evacuation Squads	F-25
	F-20.	Employment of the Evacuation Platoon	F-28
Section	**VI.**	**Combat Health Logistics Support for the Brigade Combat Team**	F-28
	F-21.	Overview	F-28
	F-22.	Health Service Materiel Officer	F-29

			Page
	F-23.	Functional Combat Health Logistics Module Business Systems	F-29
	F-24.	Class VIII Requisitioning in the Brigade	F-29
	F-25.	Medical Maintenance	F-30
	F-26.	Property Exchange	F-30
	F-27.	Delivery of Class VIII Supplies	F-31
	F-28.	Blood Management	F-31
APPENDIX	**G.**	**TACTICAL STANDING OPERATING PROCEDURE**	G-1
	G-1.	General	G-1
	G-2.	Purpose of the Tactical Standing Operating Procedure	G-1
	G-3.	Format for the Tactical Standing Operating Procedure	G-1
	G-4.	Sample Tactical Standing Operating Procedure (Sections)	G-2
	G-5.	Sample Tactical Standing Operating Procedure (Annexes)	G-3
APPENDIX	**H.**	**CLINICAL STANDING OPERATING PROCEDURE**	H-1
	H-1.	General	H-1
	H-2.	Purpose of the Clinical Standing Operating Procedure	H-1
	H-3.	Sample Clinical Standing Operating Procedure	H-1
APPENDIX	**I.**	**COMMUNICATIONS, AUTOMATION, AND POSITION NAVIGATION SYSTEMS**	I-1
Section	**I.**	**Communications and Equipment**	I-1
	I-1.	General	I-1
	I-2.	Frequency-Modulated Radios	I-1
	I-3.	Amplitude-Modulated Radios	I-2
	I-4.	Ancillary Radio Equipment	I-2
	I-5.	Mobile Subscriber Equipment	I-4
	I-6.	Position/Navigation Equipment	I-4
Section	**II.**	**Combat Net Radios**	I-5
	I-7.	Combat Net Radio Systems	I-5
	I-8.	Radio and Wire Nets	I-6
Section	**III.**	**Automation and Digitization**	I-11
	I-9.	Warfighter Information Network	I-11
	I-10.	Tactical High-Speed Data Network	I-12
	I-11.	Medical Company Automation/Digitization Enablers	I-12
Section	**IV.**	**Medical Communications for Combat Casualty Care System Concept**	I-13
	I-12.	General	I-13
	I-13.	Medical Digitization of the Combat Brigades	I-14
	I-14.	The Application of Medical Communications for Combat Casualty Care in Combat Health Support Echelons of Care	I-15
	I-15.	Medical Command and Control Application	I-16

			Page
APPENDIX	**J.**	**CLEARING STATION OPERATIONS ON URBANIZED TERRAIN**	J-1
	J-1.	Employment	J-1
	J-2.	Site Selection and Unit Layout	J-1
	J-3.	Forward Surgical Team	J-2
	J-4.	Mass Casualty Operations	J-2
	J-5.	Forward Deployed Medical Treatment, Preventive Medicine, and Medical Evacuation Assets	J-2
APPENDIX	**K.**	**MANAGEMENT OF INDIVIDUAL HEALTH RECORDS IN THE FIELD**	K-1
	K-1.	General	K-1
	K-2.	Health Records of Deployed Soldiers	K-1
	K-3.	Use of Field Files/DD Form 2766	K-3
	K-4.	Storage of Health Records and Civilian Employee Medical Records	K-3
	K-5.	Establishment and Management of the Field File in the Operational Area	K-3
	K-6.	Health Assessment after Deployment	K-4
	K-7.	Field Record Administration after Hostilities Cease	K-5
APPENDIX	**L.**	**CLINICAL GUIDELINES FOR COMBAT CASUALTY CARE**	L-1
Section	**I.**	**Clinical Guidelines for Physician-Lead, Physician Assistant-Lead, and Nursing-Lead Treatment Modules**	L-1
	L-1.	General	L-1
	L-2.	Field Surgeon (62B00 MC)…	L-1
	L-3.	Physician Assistant (65D00 SP)	L-1
	L-4.	Medical-Surgical Nurse (66H00 AN)	L-1
	L-5.	Forward Surgical Team	L-2
Section	**II.**	**Health Care Specialists Treatment and Evacuation Modules**	L-2
	L-6.	The 91W Health Care Specialist	L-2
	L-7.	Core Competencies of the 91W	L-2
	L-8.	Medical Training	L-4
	L-9.	Semiannual Combat Medic Skills Validation Test	L-9
Section	**III.**	**Dental-Lead Treatment and Clinical Diagnostic Support Modules**	L-10
	L-10.	Comprehensive Dental Officer (63B00 DC)	L-10
	L-11.	Dental Specialist (91E)	L-10
	L-12.	Core Competencies/Critical Tasks and Training for the 91E	L-10
	L-13.	Radiology Specialist (91P)	L-12
	L-14.	Radiology Specialist/Sergeant Core Competencies, Critical Tasks and Training	L-13
	L-15.	Medical Laboratory Specialist (91K)	L-15
	L-16.	Core Competencies of the 91K	L-16
	L-17.	Clinical Laboratory Training	L-16

Page

Section IV. Mental Health Clinical Support Modules L-17
L-18. Psychiatrist (60W00 MC) L-17
L-19. Social Worker (73A67 MS) L-17
L-20. Clinical Psychologist (73B67 MS) L-18
L-21. Mental Health Specialist (91X) L-18
L-22. Core Competencies of the 91X L-19
L-23. Mental Health Specialty Training L-19
Section V. Preventive Medicine Support Modules L-20
L-24. Preventive Medicine Officer (60C00 MC) L-20
L-25. Environmental Science Officer (72D67 MS) L-20
L-26. Preventive Medicine Specialist (91S) L-21
Section VI. Optometry Clinical Support Modules L-21
L-27. Optometry Officer (67F00 MS) L-21
L-28. Eye Specialist (91WP3) L-22
L-29. Core Competencies of the 91WP3 ..... L-22
L-30. Training for the 91WP3 ..... L-22
L-31. Optical Laboratory Specialist (91H10) L-24

GLOSSARY Glossary-1

REFERENCES References-1

INDEX Index-1

PREFACE

This field manual (FM) provides information on the employment, functions, and operations of divisional and nondivisional medical companies of Army of Excellence (AOE) and Army XXI divisions to include separate brigades, the interim brigade combat team, and the armored cavalry regiment. It is intended to serve as doctrine and a primary reference publication for medical planners and the medical commander and his staff.

Users of this publication are encouraged to submit comments and recommendations to improve the publication. Comments should include the page, paragraph, and line(s) of the text where the change is recommended. The proponent for this publication is the United States (US) Army Medical Department Center and School (AMEDDC&S). Comments and recommendations should be forwarded directly to Commander, AMEDDC&S, ATTN: MCCS-FCD-L, 1400 East Grayson Street, Fort Sam Houston, Texas 78234-5052.

The staffing and organizational structure presented in this publication reflects those established in AOE and Force XXI tables of organization and equipment (TOEs). However, such staffing is subject to change to comply with manpower requirements criteria and can be subsequently changed by your modified table of organization and equipment (MTOE).

As the Army Medical Department (AMEDD) transitions to the 91W military occupational specialty (MOS), positions for 91B and 91C will be replaced by 91W when new unit MTOE take effect.

This publication implements and/or is in consonance with the following North Atlantic Treaty Organization (NATO) Standardization Agreements (STANAGs), American, British, Canadian, and Australian (ABCA) Quadripartite Standardization Agreements (QSTAGs), and Air Standardization Agreements (AIR STDs).

TITLE	STANAG	QSTAG	AIR STD
Regulations and Procedures for Road Movements and Identification of Movement Control and Traffic Control Personnel and Agencies	2454		
Medical Employment of Air Transport in the Forward Area	2087	529	
Documentation Relative to Medical Evacuation, Treatment and Cause of Death of Patients	2132	470	
Orders for the Camouflage of the Red Cross and Red Crescent on Land in Tactical Operations	2931		
Aeromedical Evacuation	3204		
Aeromedical Evacuation by Helicopter			44/36A
Selection, Priorities, and Classes of Conditions for Aeromedical Evacuation			61/71

Unless this publication states otherwise, masculine nouns and pronouns do not refer exclusively to men.

Use of trade or brand names in this publication is for illustrative purposes only and does not imply endorsement by the Department of Defense (DOD).

CHAPTER 1

COMBAT HEALTH SUPPORT SYSTEM

Section I. OVERVIEW OF COMBAT HEALTH SUPPORT

1-1. General

The combat health support (CHS) system is a continuum from the forward edge of the battle area (FEBA) through the continental United States (CONUS) sustainment base. It is a system that provides medical management throughout all echelons of care. The challenge is to simultaneously provide medical support to mobilizing and deploying forces, establish a CHS system within the theater, and continue to provide health care services to the CONUS base. Additionally, there will be a requirement to provide medical support to redeployment and demobilization operations at the conclusion of operations. The basic tenets of CHS for a Force Projection Army involve strict adherence to AMEDD battlefield rules. These battlefield rules provide the basis for the development of medical organizations and force structure. Table 1-1 lists these rules in order of precedence.

Table 1-1. Army Medical Battlefield Rules

BE THERE (MAINTAIN A MEDICAL PRESENCE WITH THE SOLDIER)
MAINTAIN THE HEALTH OF THE COMMAND
SAVE LIVES
CLEAR THE BATTLEFIELD OF CASUALTIES
PROVIDE STATE-OF-THE-ART-MEDICAL CARE
ENSURE EARLY RETURN TO DUTY OF THE SOLDIER

1-2. Theater of Operations

A theater of operations (TO) is that portion of an area of war necessary for military operations and for the administration of such operations. The scenario depicts the size of the TO and the US forces to be deployed. The theater is normally divided into a combat zone (CZ) and a communications zone (COMMZ). The CZ begins at the Army/corps rear boundary and extends forward to the extent of the commander's area of influence. The COMMZ begins at the corps rear boundary and extends rearward to include the areas needed to provide support to the forces in the CZ. In some instances, the COMMZ may be outside the TO.

NOTE

The area encompassed by the COMMZ is often referred to as echelons above corps (EAC), as the COMMZ is no longer routinely established for all operations.

1-3. Mission

The mission of the AMEDD is to conserve the fighting strength. This mission is accomplished by providing a seamless health care delivery system from the initial point of wounding, injury, or illness, through successive echelons of medical care, to a facility that can provide definitive and rehabilitative care for the specific illness/injury. Essential care includes resuscitative care and en route care, as well as care to either return a patient to duty (within the stated theater evacuation policy) or to begin initial treatment required for optimization of outcome and to ensure the patient can tolerate evacuation to the next echelon of care and/or out of the TO.

1-4. Echelons of Medical Care

Combat health support is arranged into five echelons of medical care. Each echelon reflects an increase in medical capabilities while retaining the capabilities found in the preceding echelon. The TO is normally organized into four echelons of support that extend rearward from the FEBA. The fifth echelon is located in CONUS. In the TO, CHS is tailored and phased to enhance patient acquisition, treatment, evacuation, and return to duty (RTD) as far forward as the tactical situation permits.

a. *Echelon I*. Care is provided by designated individuals or elements organic to combat and combat support (CS) units and elements of the area support medical battalion (ASMB). Major emphasis is placed on those measures necessary to stabilize the patient (maintain airway, stop bleeding, and prevent shock) and allow for evacuation to the next echelon of care.

(1) Echelon I medical care is provided by—

- Medical platoons/sections of combat and CS battalions.
- Divisional and nondivisional medical companies/troops.
- Corps and EAC area support medical companies (ASMCs) and area support medical detachments (ASMDs).

(2) The first medical care a soldier receives is provided at Echelon I. This echelon of care includes the following:

- Immediate lifesaving measures.
- Prevention and treatment of disease and nonbattle injuries (DNBIs).
- Combat operational stress control (COSC) preventive measures.
- Patient collection.
- Medical evacuation from supported units to supporting medical treatment elements.

- Treatment provided by designated trauma specialists or treatment squads (battalion aid stations [BASs]). Major emphasis is placed on those measures necessary for the patient to RTD, or to stabilize him and allow for his evacuation to the next echelon of care. These measures include maintaining the airway, stopping bleeding, preventing shock, protecting wounds, immobilizing fractures, and other emergency measures, as indicated.

(3) The trauma specialist is assisted in his duties by nonmedical personnel performing first-aid procedures. First aid is administered by an individual (self-aid or buddy aid) and by the combat lifesaver.

(*a*) *Self-aid and buddy aid*. Each individual soldier is trained to be proficient in a variety of specific first-aid procedures. These procedures include aid for nuclear, biological, and chemical (NBC) casualties with particular emphasis on lifesaving tasks. This training enables the soldier or a buddy to apply immediate first aid to alleviate a life-threatening situation.

(*b*) *Combat lifesaver*. The combat lifesaver is a member of a nonmedical unit selected by the unit commander for additional training beyond basic first-aid procedures. A minimum of one individual per squad, crew, team, or equivalent-sized unit should be trained. The primary duty of this individual does not change. The additional duty of the combat lifesaver is to provide enhanced first aid for injuries, based on his training before the trauma specialist arrives. The combat lifesaver's training is normally provided by medical personnel assigned, attached, or in direct support (DS) of the unit. The training program is managed by the senior medical person designated by the commander.

(4) Echelon I medical treatment is provided by the trauma specialist or by personnel in the BAS/squadron aid station (SAS).

(*a*) Emergency medical treatment (EMT) (immediate far-forward care) consists of those lifesaving steps that do not require the knowledge and skill of a physician. The trauma specialist is the first individual in the CHS chain who makes medically substantiated decisions based on medical MOS-specific training.

(*b*) The physician and the physician assistant (PA) in a treatment squad are trained and equipped to provide advanced trauma management (ATM) to the battlefield casualty. Advanced trauma management is emergency care designed to resuscitate and stabilize the patient for evacuation to the next echelon of care. Each squad can split into two trauma treatment teams. When not engaged in ATM, these elements provide routine sick call services on an area basis. Echelon I care for units not having an organic capability is provided on an area support basis by the supporting medical element/unit in the AO. Like elements provide this echelon of care in divisions, corps, and EAC units.

b. *Echelon II*. Care at this echelon is rendered at the clearing station (division or corps). The clearing station can be augmented with a forward surgical team (FST), as required, for far forward surgical intervention to stabilize a nontransportable patient for further evacuation.

(1) At the clearing station, the patient is examined and his wounds and general status are evaluated to determine his treatment and evacuation precedence, as a single casualty among other casualties.

Those patients who can RTD within 1 to 3 days are held for treatment. Emergency medical treatment (including beginning resuscitation) is continued and, if necessary, additional emergency measures are instituted; but they do not go beyond the measures dictated by the immediate necessities. The division clearing station has blood replacement capability, limited x-ray and laboratory services, patient-holding capability, and operational dental care. The clearing station also provides Echelon I care to those units without organic medical elements within its area of responsibility (AOR).

(2) The FST is a corps augmentation for divisional and nondivisional medical companies without an organic surgical capability (paragraph 1-8). The FST provides emergency/urgent initial surgery and nursing care after surgery for the critically wounded/injured patient until he is sufficiently stable for evacuation to a corps hospital. The FSTs not organic to divisions and regiments will be assigned to a medical brigade and normally attached to a corps hospital when not operationally employed. The FST will be further attached for support to a divisional/nondivisional medical company. For a detailed discussion on the FST, refer to FM 8-10-25.

(3) Echelon II CHS also includes preventive medicine (PVNTMED) activities and COSC. These functions are performed typically by company-sized medical units organic to brigades, divisions, and ASMBs.

c. *Echelon III*. The first hospital facility, the corps combat support hospital (CSH), is located at this echelon. The CSH is staffed and equipped to provide resuscitation, initial wound surgery, and postoperative treatment. Patients are stabilized for continued evacuation or RTD. Those patients who are expected to RTD within the theater evacuation policy are regulated to an EAC hospital, if present in the TO. For detailed information on theater hospitalization, refer to FM 4-02.10 and FM 8-10-14.

d. *Echelon IV*. At this echelon, the patient will be treated at the field or general hospital (Medical Force 2000) or the EAC CSH (Medical Reengineering Initiative [MRI]). Those patients not expected to RTD within the theater evacuation policy are stabilized and evacuated out of theater (refer to FM 4-02.10 and FM 8-10-15).

e. *Echelon V*. This echelon of care is provided in the CONUS. Hospitals in the CONUS sustaining base provide the definitive and rehabilitative treatment capability for patients generated within the theater. Department of Defense hospitals (military hospitals of the triservices) and Department of Veterans Affairs (VA) hospitals are specifically designated to provide the soldier with maximum return of function through a combination of medical, surgical, rehabilitative, and convalescent care. Under the National Disaster Medical System, patients overflowing DOD and VA hospitals are cared for in designated civilian hospitals.

1-5. The Medical Threat and Medical Intelligence

a. The medical threat is a composite of all ongoing or potential enemy actions and environmental conditions that may render a soldier combat ineffective. The soldier's reduced effectiveness results from sustained wounds, injuries, stress, or diseases. The elements of the medical threat include, but are not limited to—

- Diseases endemic to the AO.

- Environmental and occupational health hazards such as toxic industrial material (TIM), heat, and cold.

- Battle injuries from conventional weapons and weapons of mass destruction (WMD) to include NBC warfare agents.

- Physiological and psychological stressors (such as in continuous operations).

- Diseases caused by zoonotic/animal bites.

- Presence of poisonous animals, plants, and insects.

- Level of compliance with the law of war and the Geneva Conventions requirements regarding *respect and protection* of medical personnel, medical facilities, and transportation means (see Appendix A).

b. In order to develop the CHS estimate and plan (see Appendix B of this publication, FM 8-42, and FM 8-55), the CHS planner obtains updated medical intelligence through intelligence and other channels. Medical intelligence is the product resulting from the collection, evaluation, analysis, integration, and interpretation of all available general health and bioscientific information. Medical intelligence is concerned with one or more of the medical aspects of foreign nations or AO. Until medical information is appropriately processed (ordinarily on the national level by the Armed Forces Medical Intelligence Center [AFMIC]), it is not considered to be intelligence.

c. For additional information on the medical threat and medical intelligence, refer to FM 8-10-8, FM 4-02.17, FM 8-42, and FM 8-55.

1-6. Planning for Combat Health Support

a. The extended and nonlinear battlefield stretches CHS capabilities to the maximum. It presents unprecedented challenges to the CHS planner as well as to the tactical commander. While the responsibility for what is or is not done is the tactical commander's alone, he must rely on his staff and his subordinate commanders to execute his decisions. It is imperative that the CHS planner be involved in the initial stages of the planning process. A thorough understanding of the tactical commander's plan is necessary for the CHS commander to support the tactical commander during the absence of orders or communications. Combat health support planning is an intense and demanding process. The CHS planner must know what the organic capabilities of the supported units are and—

- WHAT each supported element will do.

- WHEN it will be done.

- HOW it will be accomplished.

- WHAT threat it faces.

b. The CHS planner must foresee actions beforehand to be able to plan for positive and responsive support to each element supported. He must be prepared to meet the requirements for—

- Medical treatment to include area support (FM 4-02.4 and FM 4-02.24).

- Medical evacuation (to include training of nonmedical personnel to serve as litter bearers) and medical regulating (FM 8-10-6, FM 8-10-26, and FM 8-55).

- Hospitalization (FM 4-02.10, FM 8-10-14, and FM 8-10-15).

- Combat health logistics, to include blood management (FM 4-02.1 and FM 8-10-9).

- Preventive medicine services (FM 4-02.17, FM 21-10, and FM 21-10-1).

- Veterinary services (FM 8-10-18).

- Dental services (FM 4-02.19).

- Combat operational stress control (FM 6-22.5, FM 8-51, and FM 22-51).

- Command, control, communications, computers and intelligence (C4I) (FM 8-10, FM 8-10-8, and FM 8-10-16).

- Medical laboratory services (FM 8-10).

c. To ensure effective support, the CHS planner must stay abreast of the tactical commander's plans and objectives. This ensures that the CHS plan provides the flexibility to meet changes in the CHS requirements. To this end, commanders and their staffs must coordinate horizontally and vertically with both medical and nonmedical staffs. Commanders must be able to reallocate medical resources as the tactical situation changes.

d. On the integrated battlefield, medical units can anticipate situations in which large numbers of patients are produced in a relatively short period of time. These mass casualty (MASCAL) situations may exceed local CHS capabilities. Key factors for effective MASCAL management are on-site triage, EMT, effective communications, and skillful evacuation by ground and air resources (refer to Appendix C).

- The objective of providing the greatest good for the greatest number is achieved by medical units maximizing the use of available resources and prioritizing missions.

- To free medical personnel from nonclinical duties, nonmedical personnel may have to serve as litter bearers, perform rescue operations, or perform other nonmedical tasks, as required.

e. Combat health support planning is an intricate process which enables the CHS commander or command surgeon to develop the most effective and flexible plan for providing CHS to the tactical commander. Appendix B provides a sample of the CHS estimate and the CHS plan. For additional information on the planning for CHS, refer to FM 8-42 and FM 8-55.

1-7. Principles of Combat Health Support

a. *Conformity*. Conformity with the tactical plan is the most fundamental element for effectively providing CHS. Only by participating in the development of the operation plan (OPLAN) can the CHS planner ensure adequate support at the right time and the right place.

b. *Continuity*. Combat health support must be continuous since an interruption of treatment may cause an increase in morbidity and mortality. No patient is evacuated any farther to the rear than his physical condition or the military situation requires.

c. *Control*. Technical control and supervision of medical assets must remain with the appropriate force-level surgeon. Combat health support staff officers must be proactive and keep their commanders apprised of the impact of future operations on CHS resources. The CHS system must be responsive to a rapidly changing battlefield and must support the tactical OPLAN in an effective manner. The medical commander must be able to tailor CHS organizations and direct them to focal points of demand throughout his AO. Treatment performed at each echelon of the CHS system must be commensurate with available CHS resources. Since these resources are limited, it is essential that their control be retained at the highest CHS level consistent with the tactical situation.

d. *Proximity*. The location of CHS assets in support of combat operations is dictated by the tactical situation (mission, enemy, terrain, troops, time available, and civilian considerations [METT-TC] factors), time and distance factors, and availability of evacuation resources. The speed with which medical treatment is initiated is extremely important in reducing morbidity and mortality. Medical evacuation time must be minimized by the efficient allocation of resources and the judicious location of medical treatment facilities (MTFs). The MTFs cannot be located so far forward that they interfere with the conduct of combat operations or are subjected to enemy interference. Conversely, they must not be located so far to the rear that medical treatment is delayed due to the lengthened evacuation time. Further, the location of the MTFs may be affected by the level of conformance to the Geneva Convention protections by the combatants.

e. *Flexibility*. Since a change in tactical plans or operations may require redistribution or relocation of medical resources to meet the changing requirements, no more medical resources should be committed nor MTFs established than are required to support expected patient densities. When the patient load exceeds the means available for treatment (MASCAL situation), it may be necessary to give priority to those patients who can be returned to duty the soonest, rather than those who are more seriously injured. This ensures manning of the tactical commander's weapons systems.

f. *Mobility*. Since contact with supported units must be maintained, CHS elements must have mobility comparable to that of the units they support. Mobility is measured by the extent to which a unit can

move its personnel and equipment with organic transportation. When totally committed to patient care, a CHS unit can regain its mobility only by immediate patient evacuation.

1-8. Modular Medical Support System

a. *General*. The modular medical support system was designed to standardize all medical sub-elements in Echelons I and II. The divisional medical companies and Echelon II units in the corps and EAC are based on this design. This system enables the medical resources manager to rapidly tailor, augment, re-inforce, or regenerate CHS units as needed. This system is designed to acquire, receive, and triage patients and to provide EMT and ATM. Combat health support originates in the forward areas (divisions) with the trauma specialist (Echelon I). From this point, the patient is evacuated to the BAS (Echelon I) and then to the division clearing station (Echelon II). The area support medical company provides Echelons I and II CHS on an area support basis to units without organic medical support operating in the corps and EAC.

b. *Modular Medical Support System*. The modular medical support system is built around six modules. These modules are oriented to casualty collection, treatment, and RTD or evacuation.

(1) *Trauma specialist*. The trauma specialist (combat medic) module consists of one trauma specialist and his prescribed load of medical supplies and equipment. Trauma specialists are organic to the medical platoons or sections of combat and CS battalions and are attached to the companies of the battalions.

(2) *Ambulance squad*. An ambulance squad is comprised of two ambulance teams and two ambulances. This squad provides patient evacuation and en route medical care throughout the theater (division, corps, and EAC). Ambulance squads are organic to the medical platoons and sections in maneuver battalions, divisional/nondivisional medical companies, and medical detachments. Ambulances of forward supporting medical companies/troops are normally field-sited to BASs/SASs.

(3) *Treatment squad*. This squad consists of a primary care physician, a PA, two health care noncommissioned officers (NCOs), and four health care specialists. The squad is trained and equipped to provide ATM to the battlefield casualty or to treat and return him to duty. To maintain contact with the combat maneuver elements, each squad has two vehicles equipped with four field medical equipment set (MES): two trauma sets and two sick call sets. Each squad can split into two treatment teams (one team is headed by the physician and the other by the PA). These squads are organic to medical platoons or sections in maneuver and designated CS units, as well as being the basic building block of medical companies, medical troops, and medical detachments.

(4) *Area support squad*. This squad is comprised of one dentist trained in ATM, a dental specialist, a radiology specialist, and a medical laboratory specialist. This squad is organic to all divisional and nondivisional medical companies/troops and detachments.

(5) *Patient-holding squad*. This squad consists of one medical-surgical nurse, two health care NCOs, and two health care specialists. It is capable of holding and providing minimal care for up to 40 (20 in the light infantry division) RTD patients. This squad is also organic to all divisional and nondivisional medical companies/troops and detachments.

NOTE

When an area support squad, and a patient-holding squad are collocated, they form the clearing station (Echelon II MTF). This MTF provides CHS on an area basis to all forces within a geographical AOR (clearing station). The area support and patient-holding squads are not capable of independent operations.

(6) *Forward surgical team*. The FST is a corps asset and is an augmentation to Echelon II CHS. It is also organic to the airborne and air assault divisions and the armored cavalry regiment (ACR). The FST provides a rapidly deployable immediate surgery capability. It provides surgical support forward in division, separate brigade, and ACR operational areas. This small lightweight surgical module is designed to complement and augment emergency treatment capabilities for the brigade-sized task forces (TFs). The corps FST is normally attached to the supporting medical company's higher headquarters and collocates with the clearing station. The FST coordinates, through the supported medical company, for general support (GS) such as Class I, II, III, and VIII resupply. The team also coordinates through the medical company for its security and redeployment. For additional information on the operations and functions of the FST, refer to FM 8-10-25.

Section II. COMBAT HEALTH SUPPORT FUNCTIONAL AREAS

1-9. General

The CHS continuum encompasses all of the functional areas within the AMEDD. However, C4I will not be discussed in this chapter; it is included throughout the manual as appropriate. Within the division, the full spectrum of services is provided by a combination of assigned and attached CHS resources.

1-10. Medical Treatment

a. Medical treatment consists of those measures necessary to recover, resuscitate, stabilize, and prepare the patient for evacuation to the next echelon of care. The medical treatment functional area encompasses Echelons I and II medical treatment. These echelons of care are provided on an area support basis from the supporting medical units/elements.

b. Medical treatment is provided through the use of modular medical elements (paragraph 1-8) and units designed to perform specific battlefield medical functions. The composition of each module will be identical regardless of where they are employed. This eases the reconstitution burden on the CHS system. Echelon I CHS elements provide ATM, routine medical sick call, and limited medical ground evacuation. Echelon II medical units duplicate these services in addition to providing limited dental, x-ray, and medical laboratory services, and extensive medical ground evacuation services. Other area medical

support functions include limited optometry, dental support, mental health (MH) and COSC, PVNTMED, and limited patient-holding capabilities.

1-11. Medical Evacuation and Medical Regulating

a. *Medical Evacuation*. The systematic evacuation of sick, injured, or wounded soldiers within US forces has been an evolutionary process. The current organizational design and doctrine are based on years of experience and the assimilation of lessons learned. Medical evacuation encompasses—

- Collecting the wounded for evacuation.
- Sorting (triage).
- Providing an evacuation mode.
- Providing medical care en route.
- Anticipating complications and being ready and capable to perform emergency medical interventions.

(1) For medical evacuation, the gaining echelon is responsible for arranging for the evacuation of patients from lower echelons of care. For example, Echelon II medical units are responsible for evacuating patients from BASs (Echelon I MTFs). Medical evacuation begins when medical personnel receive the sick, injured, or wounded soldier and continues as far rearward as the patient's medical condition warrants, or the military situation requires.

(2) The theater evacuation policy is established by the Secretary of Defense, with the advice of the Joint Chiefs of Staff, and upon the recommendation of the theater commander. The policy establishes, in days, the maximum period of noneffectiveness (hospitalization and convalescence) that patients may be held within the theater for treatment. This policy does not mean that a patient is held in the TO for the entire period of noneffectiveness. A patient who is not expected to be ready for RTD within the number of days established in the theater evacuation policy is evacuated to CONUS or some other safe haven. This is done providing that the treating physician determines that such evacuation will not aggravate the patient's medical condition. For example, a theater evacuation policy of 15 days does not mean that a patient will be held in the TO for 14 days and then evacuated. Rather, it means that a patient is evacuated as soon as it is determined that he cannot be RTD within 15 days following admission.

(3) When the medical evacuation system becomes overwhelmed with patients, as in a MASCAL situation, nonmedical transportation assets may be required to move the wounded. Prior planning to incorporate this requirement into the OPLAN ensures that the use of these assets is integrated with the dedicated medical evacuation platforms. When the use of nonmedical transportation assets is planned, augmentation medical personnel should be requested to provide medical care en route on these vehicles.

b. *Medical Regulating*. Medical regulating is the coordination and control of evacuating patients to MTFs that are best able to provide the required specialty care. This system is designed to ensure the efficient and safe movement of patients. Within the division, informal medical regulating is known as patient tracking. Medical regulating from the division and patient tracking within the division is the responsibility of the division medical operations center (DMOC) for the AOE division; it is the responsibility of the division surgeon's section (DSS) for the Force XXI division. Patient tracking within the division is usually operated procedurally so as not to depend solely on communications to effect rapid evacuation. The medical regulating function of the DMOC/DSS is concerned primarily with—

- Tracking the movement of patients throughout the division MTFs and into corps facilities.
- Monitoring the location of corps air and ground ambulance assets in support of the division.
- Coordinating with the corps medical evacuation battalion when additional resources are required.

(1) Corps air and ground ambulances placed in DS of the division are field-sited based on METT-TC. Once an evacuation mission is completed, the originating division MTF contacts the patient disposition element of the DMOC/DSS and provides patient numbers by category and precedence; departure times; modes of transportation; destination MTFs; and any other information required by the tactical standing operating procedure (TSOP). The DMOC/DSS, in turn, notifies the medical brigade medical regulating office (MRO) via the administration/logistics net.

(2) Medical evacuation can be effected immediately, procedurally, and under conditions of communications silence without interrupting the continuum of care by—

- Preparing patient estimates.
- Prioritizing and task organizing ambulance support.
- Assigning blocks of hospital bed designations prior to the start of a mission.

c. *Additional Information*. For additional information on medical evacuation and medical regulating, refer to FM 8-10-6 and FM 8-10-26.

1-12. Hospitalization

a. Corps hospitalization is provided by hospitals subordinate to the corps medical command (MEDCOM)/medical brigade. Hospitalization is provided as close as practical to the troops requiring it (see FMs 4-02.10 and 8-10-14).

b. The theater MEDCOM provides hospitalization for Army patients originating in EAC and for those received from the CZ. The hospital system at EAC is also comprised of the MRI 248-bed CSH

(FM 4-02.10). Hospitalization of patients from other Services is provided as directed by higher headquarters. Hospitalization requirements must be forecasted so that MTFs can be established in advance of the time they are to be occupied.

c. The CONUS-sustaining base hospitals provide the definitive and rehabilitative treatment capability for patients generated within the TO.

d. Refer to paragraph 1-4*e* of this publication, FM 4-02.10, FM 8-10-14, and FM 8-10-15 for additional information on hospitalization.

1-13. Combat Health Logistics

Combat health logistics (CHL) (to include blood management**)** is an integral part of the CHS system. Combat health logistics encompasses the planning and execution of medical supply operations, medical equipment maintenance, optical fabrication and repair, contracting services, medical hazardous waste management and disposal, production and distribution of medical gases, and blood banking services for Army operations; when designated, the Army may provide Class VIII support to the other Services, and during interagency and multinational operations. For a detailed discussion of CHL, see FM 4-02.1 and FM 8-10-9.

1-14. Dental Services

Within the theater, dental service support provides *operational care*, which is composed of *emergency dental care* and *essential dental care*. Another category, normally found only in fixed facilities in the CONUS, is *comprehensive care*. These categories are not absolute in their limits; they are the general basis for the definition of the dental service capabilities available at the different CHS echelons of care.

a. *Operational Care*. Care given for the relief of oral pain, elimination of acute infection, control of life-threatening oral conditions (hemorrhage, cellulitis, or respiratory difficulty), and treatment of trauma to teeth, jaws, and associated facial structures is considered *emergency care*. It is the most austere type of care and is available to soldiers engaged in tactical operations. Common examples of emergency treatments are simple extractions, antibiotics, pain medication, and temporary fillings. *Essential care* includes dental treatment necessary to intercept potential emergencies. This type of operational care is necessary for prevention of lost duty time and preservation of fighting strength. Soldiers in Dental Class 3 (potential dental emergencies) should be provided essential care as the tactical situation permits. Soldiers in Dental Class 2 (untreated oral disease) should be provided essential care as the tactical situation and availability of dental resources permit. The scope of operational care includes restoration, minor oral surgery, exodontic, periodontic, and prosthodontic procedures as well as prophylaxis.

b. *Comprehensive Care*. Treatment to restore an individual to optimal oral health, function, and esthetics is considered *comprehensive care*. Comprehensive dental care may be achieved incidental to providing operational care in individuals whose oral condition is healthy enough to be addressed by the category of care provided. This category of care is usually reserved for CHS plans that anticipate an extensive period of reception and training in theater. The scope of facilities needed to provide this level of dental support could equal that of Echelon III MTFs (see FM 4-02.19).

1-15. Veterinary Services

a. Veterinary support is an integral part of CHS within a TO. The US Army Veterinary Service is designated as the DOD Executive Agent for veterinary services and as such, provides support as required for the US Army, US Navy, US Marine Corps, and United States Air Force (USAF). Veterinary support is also provided upon request and subject to availability of resources for government-owned animals of other federal agencies. In some instances, US veterinary support may also be provided to allies, coalition partners, and/or host-nation (HN) agencies. There are no organic veterinary assets within the divisions, separate brigades, and ACRs. However, veterinary support is an integral part of the CHS system within the TO. Veterinary service within the corps and EAC includes—

- Food hygiene and quality assurance.
- Veterinary medical care.
- Veterinary PVNTMED.

b. For additional information on veterinary support activities, refer to FM 8-10-18.

1-16. Preventive Medicine Services

Historically, DNBIs have rendered more soldiers combat ineffective than actual battle casualties. Therefore, the medical threat (paragraph 1-5) must be recognized, analyzed, and measures taken to combat its effects. The medical threat accounts for the vast majority of combat noneffectiveness.

a. Division, brigade, and regimental surgeons should monitor PVNTMED programs to include medical surveillance activities to ensure they are accomplished and/or to initiate programs that are required. Assistance with PVNTMED programs can be obtained from the PVNTMED section of medical companies/ troops or corps-level PVNTMED detachments. Command emphasis is needed to ensure that PVNTMED measures are practiced.

b. The company field sanitation team consists of two soldiers. This team is specially trained by PVNTMED personnel in potable water supply, food service sanitation, waste disposal, pest management, environmental and occupational health hazards, and TIM hazards. The field sanitation team serves as an aid to the unit commander in protecting the health of his command. Through regular inspections, the field sanitation team ensures sanitary standards are maintained and PVNTMED measures practiced.

c. For additional information on PVNTMED doctrine and activities, refer to FM 4-02.17, FM 4-02.33, FM 8-50, FM 8-500, FM 21-10, and FM 21-10-1.

1-17. Combat Operational Stress Control Services

a. Combat operational stress control is a system-oriented program to control stressors and stress behaviors. It is coordinated and conducted by MH personnel. Of primary importance in this effort are the

organic MH sections of divisional medical companies, the medical companies of separate brigades, the medical troops of ACRs, the ASMBs, and the MH staffs of the MEDCOM and medical brigade headquarters. The organic MH sections are augmented when and where needed by COSC teams from corps-level COSC medical companies or detachments.

b. The mission of COSC team is to assist the command in controlling combat operational stress by providing training and consultation in the control of stressors, the promotions of positive combat operational stress behavior, and the identification, handling, and the management of battle fatigue (BF) soldiers.

c. Combat operational stress prevention programs reduce the incidence of new combat operational stress-related casualties. These programs promote the early recovery and RTD of stress casualties. They reduce the cases that could otherwise overload the CHS system.

d. For additional information on COSC, refer to FM 6-22.5, FM 8-51, and FM 22-51.

1-18. Medical Laboratory Services

Medical laboratory services in a TO are designed to enhance diagnostic capabilities and to identify suspect biological warfare (BW) and chemical warfare (CW) agents.

a. Diagnostic medical laboratory assets analyze body fluids and tissues to determine disease processes or to identify microorganisms. The equipment and personnel available are limiting factors in the scope of services provided. The sophistication of laboratory services increases at each successive echelon of care. Additionally, the management of blood and blood components are critical tasks requiring medical laboratory and CHL assets.

(1) Echelon II is the first level where a laboratory specialist is assigned. Laboratory tests are limited to manual procedures such as hematocrit, white blood cell count, urinalysis, and gram staining.

(2) At Echelons III and IV, laboratory officers and laboratory NCOs are available. A full range of laboratory procedures is provided at these echelons. Each has a clinical laboratory to support patient care.

b. The primary mission of the area medical laboratory (AML) focuses on the identification and evaluation of health hazards in the AO through accurate field confirmatory laboratory testing of NBC, endemic disease, and occupational and environmental agents.

c. For additional information on medical laboratory capabilities refer to FM 8-10, FM 8-10-7, FM 8-10-14, FM 8-10-15, FM 4-02.24, FM 8-43, and FM 8-55.

CHAPTER 2

THE MEDICAL COMPANY

Section I. THE MEDICAL COMPANY AND DIVISION OVERVIEW

2-1. General

The medical company provides Echelons I and II CHS for soldiers assigned to combat arms, CS, or to combat service support (CSS) units. Medical companies are organic to CSS battalions in divisions and separate brigades. The division and separate brigade medical companies are assigned to either a main support battalion (MSB), a division support battalion (DSB), a forward support battalion (FSB), or a brigade support battalion (BSB). The medical troop assigned to the support squadron of an armored cavalry regiment performs the same functions as a medical company assigned to an FSB, MSB, DSB, or a BSB.

2-2. Division Overview

a. The division, either AOE or Force XXI division-digitized, is the largest Army fixed organization that trains and fights as a tactical team. Both are organized with varying numbers and types of combat, CS, and CSS units. A division may be armored, mechanized infantry, light infantry, airborne, or air assault, or it could be comprised of combination of task-organized heavy and light units. Each type of division conducts tactical operations across the operational continuum. Divisions are the basic units of maneuver at the tactical level. For detailed information on the divisions, refer to FM 71-100, FM 71-100-2, and FM 71-100-3.

b. In all divisions, Echelon II medical care is provided by medical companies. These medical companies are assigned to one of the CSS battalions identified above. Depending on their assignment, the medical company may be referred to as a forward support medical company (FSMC), a main support medical company (MSMC), a division support medical company (DSMC) or brigade support medical company (BSMC). In addition to Echelon II, all medical companies provide Echelon I medical care to units without organic CHS resources and may also augment Echelon I MTFs that are organic to supported unit. In the division, the FSB, MSB, DSB, and the division aviation brigade support (DABS) are assigned to the division support command (DISCOM).

2-3. Types of Division

a. *Armored and Mechanized Infantry Divisions*

(1) *Army of Excellence*. The US Army's armored and mechanized divisions (referred to collectively as heavy divisions) provide mobile, armor-protected firepower. Armored and mechanized divisions are normally employed for their mobility, survivability, lethality, and psychological effects on the enemy. These divisions destroy enemy armored forces. They can seize and secure land areas and key terrain. During offensive operations, armored and mechanized divisions can rapidly concentrate overwhelming lethal combat power to break or envelop enemy defenses or offensive formations. These divisions then continue the attack to destroy fire support, command and control (C2), and logistics elements.

Their mobility allows them to rapidly concentrate, attack, reinforce, or block enemy forces. Their collective protection systems enable them to operate in an NBC environment. Armored and mechanized divisions operate best in open terrain where they gain the advantage with their mobility and long-range, direct-fire weapons. Because of strategic lift requirements, armored and mechanized forces are slow to deploy from home or staging bases into an area of operations (AO). They have high consumption rates of supplies, can deploy relatively few dismounted infantry, and have limited use in restrictive terrain. See FM 71-100 for organizational structure of the division.

(2) *Force XXI, Digitized Division*. The Army's Force XXI Division is a redesign of our current divisions that represent a leap forward into the realm of 21st Century technology. The smaller Force XXI Division possesses greater lethality and quicker mobility, as well as the CSS imperative of situational understanding. The digital technological enablers will enhance situational understanding and provide the means for information dominance by enabling friendly forces to share a complete common relevant picture (CRP). This provides the commanders a CRP while communicating and targeting in real or near real-time. Digitization permits the division to conduct operations over an extended battle space by increasing the operational areas of responsibility for all maneuver elements. Digitization will decrease decision-making time by optimizing the flow of information. This information enables Force XXI commanders to quickly mass forces allowing the division to defeat a larger, but less technologically advanced enemy. It will contribute increased lethality, survivability, and operational tempo while reducing the potential for fratricide.

b. *Light Infantry Division*. The light infantry division fights as part of a larger force in conventional conflicts and conducts missions as part of a joint force in stability operations and support operations. Its C2 structure readily accepts any augmentation forces, permitting task organizing for any situation. The factors of METT-TC largely determine the augmentations required for the division. The optimum use of light forces is as a division under corps control, its mission capitalizing on its capabilities. The division exploits the advantages of restricted terrain and limited visibility. It achieves mass through the combined effects of synchronized small-unit operations and fires, rather than through the physical concentration of forces on the battlefield. Light division forces physically mass only when risk to the force is low and the payoff is high. The division deploys as an entity; widely dispersed to conduct synchronized, but decentralized, operations primarily at night or during periods of limited visibility. Light force limitations include their austere CS and CSS systems, and their requirement for support from the corps or joint force headquarters, based on METT-TC. For organizational structure of the light infantry division, see FM 71-100.

c. *Airborne Division*. The airborne division can rapidly deploy anywhere in the world to seize and secure vital objectives. It conducts parachute assaults to capture initial lodgments, execute large-scale tactical raids, secure intermediate staging bases or forward operating bases for ground and air operations, or rescue US nationals besieged overseas. It also can serve as a strategic or theater reserve as well as reinforcement for forward-presence forces. The airborne division can assault deep into the enemy's rear areas to secure terrain or interdict enemy supply and withdrawal routes. It can seize and repair airfields to provide a forward operating base and airheads for follow-on air-landed forces. It is capable of all other missions assigned to light infantry divisions. The airborne division uses its strategic and operational mobility to achieve surprise on the battlefield. Its aircraft range and its instrumentation capability enable the Air Force to accurately deliver the airborne division into virtually any objective area under almost any weather condition. All equipment is air transportable; most are airdroppable. All personnel are trained for

parachute assaults and airborne operations. Engagements with enemy armored or motorized formations require special consideration. The division does not have sufficient armored protection to defeat heavier armored formations at close range. Antitank weapons in the division compensate for, but do not completely offset, this deficit. For division organizational structure, see FM 71-100.

d. Air Assault Division. The air assault division combines strategic deployability with tactical mobility within its AO. It attacks the enemy deep, fast, and often over extended distances and terrain obstacles. The airmobile division of the Vietnam era provided the US Army the operational foundation, experience, and tactics for today's air assault operations. Air assault operations have evolved into combat, CS, and CSS elements (aircraft and troops) deliberately task-organized for tactical operations. Helicopters are completely integrated into ground force operations. Air assault operations generally involve insertions and extractions under hostile conditions, as opposed to mere air movement of troops to and from secure locations about the battlefield. Once deployed on the ground, air assault infantry battalions fight like battalions in other infantry divisions; however, normal task organization of organic aviation results in greater combat power and permits rapid aerial redeployment. The rapid tempo of operations over extended ranges enables the division commander to rapidly seize and maintain the tactical initiative. For division organizational structure, see FM 71-100.

e. Medium Division. The medium division consists of one armored brigade, one mechanized brigade, and one air assault brigade, and traditional heavy division aviation, CS, and CSS units. The Army designed this division to provide commanders operational flexibility with armor lethality and light infantry strength in restrictive terrain.

2-4. Forward Support Medical Company

a. Mission. The FSMCs provide Echelon II medical care to supported maneuver battalions with organic medical platoons. They also provide Echelons I and II medical treatment on an area basis to those units without organic medical assets operating in the brigade support area (BSA). The FSMC normally establishes its treatment facility in the BSA. Also, the FSMCs may deploy its treatment teams that can operate independently from the company for limited periods of time.

b. Capabilities. Each FSMC is organized to provide triage and management of mass casualties, ATM, initial resuscitation and stabilization, care for patients with DNBI, and battle wounded and injured soldiers. The FSMC also provide intervention for combat and operational stress disorders to include BF and preparation of patients for further medical evacuation. The FSMC establishes its MTF/division clearing station in the BSA and its capabilities also include—

(1) Providing routine sick call and consultation services for patients referred from Echelon I MTFs.

(2) Providing urgent initial surgery (when it is augmented or has an organic FST for critically injured patients).

(3) Providing ground ambulance evacuation (and/or arrangement for air ambulance evacuation) for patients from supported aid stations and ambulance exchange points (AXPs).

(4) Operational dental care, which consists of emergency dental care and essential dental care intended to intercept potential dental emergencies.

(5) Class VIII resupply and medical equipment maintenance for supported medical units.

(6) Medical laboratory and radiology services commensurate with Echelon II/division-level treatment.

(7) Limited blood storage.

(8) Patient holding for up to 40 patients in an armored or mechanized division and 20 patients in a light, airborne and air assault division that are able to RTD within 72 hours.

(9) Limited reinforcement and augmentation to supported maneuver battalion medical platoons.

(10) Preventive medicine services/consultation and support (provided by the FSMC under Force XXI and the BSMC of the brigade combat team (BCT). Medical surveillance for detection of any health hazards that pose a medical threat.

(11) Mental health/combat operational stress control (COSC) services, to include management of BF and stress-related casualties under Force XXI and the BSMC of the BCT TOEs.

c. *Basic Organization*. The FSMCs are organized into three basic components: a company headquarters, a treatment platoon, and an ambulance platoon (under Force XXI and the BSMC of the BCT TOEs, a PVNTMED section and a MH section are assigned). The composition of each of these components differs depending on the type of division. Refer to Figures 2-1 (FSMC-heavy), 2-2 (FSMC-light), 2-3 (FSMC-air assault), and 2-4 (FSMC-airborne) to see the structural differences. Changes to the FSMC in Force XXI divisions are noted in Figure 2-5.

d. *Dependency*. Forward support medical companies are dependent on appropriate elements of the corps, division, and brigade for patient evacuation (including air ambulances), CHS operational planning and guidance, and for legal, finance, and personnel and administrative services. It is also dependent on the FSB for food service and religious support. All of the divisional FSMCs are dependent on the FSB for vehicle maintenance support, except for the FSMC-heavy, which has organic maintenance assets within its company headquarters. The FSMCs supporting the Force XXI (digitized) division will require maintenance support from their FSBs.

2-5. Organizational Structure of Forward Support Medical Companies

a. *Forward Support Medical Company-Heavy*.

(1) The FSMC-Heavy (TOE 08058L1) (Figure 2-1) of the heavy division is organized into a company headquarters section; a treatment platoon, (organized into a platoon headquarters with two

independent treatment squads; an area support section with an area support squad, an area support treatment squad), and a patient-holding squad; and an ambulance platoon. The ambulance platoon employs a platoon headquarters with three tracked ambulance squads (six ambulances) and two-wheeled ambulance squads (four ambulances).

(2) For vehicle retrieval and track maintenance, the company headquarters employs a 5-ton truck wrecker.

(3) For rapid mobility of the clearing station, the treatment platoon employs three 5-ton expansible vans (one for the area support squad and two for the area treatment squad).

(4) For communications (see Appendix I), the company employs amplitude-modulated (AM) and frequency-modulated (FM) tactical radios, unit-level computers, a manual switchboard with wire telephones, and digital nonsecure voice telephones (DNVTs). The company headquarters establishes an FM radio net and an internal wire net for C2. It also establishes an AM net capability for reach-back support.

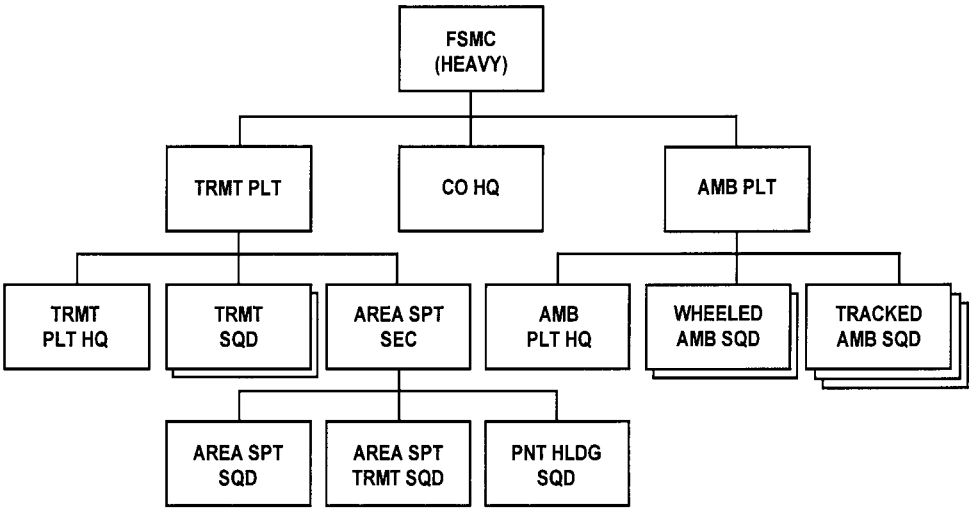

Figure 2-1. Forward support medical company-heavy (TOE 08058L1), forward support battalion, heavy division.

b. Forward Support Medical Company-Light.

(1) The FSMC-Light (TOE 08298L0) (Figure 2-2) of the light division is organized into a company headquarters section; a treatment platoon organized into a platoon headquarters with two

independent treatment squads; an area support section with an area support squad, an area support treatment team, and a patient-holding squad; and an ambulance platoon. The ambulance platoon employs a platoon headquarters with four-wheeled ambulance squads (eight ambulances).

(2) For communications (see Appendix I), the company employs AM and FM tactical radios, unit-level computers, a manual switchboard with wire telephones, and DNVTs. The company headquarters establishes an FM radio net and an internal wire net for C2. It also establishes an AM net capability for reach-back support.

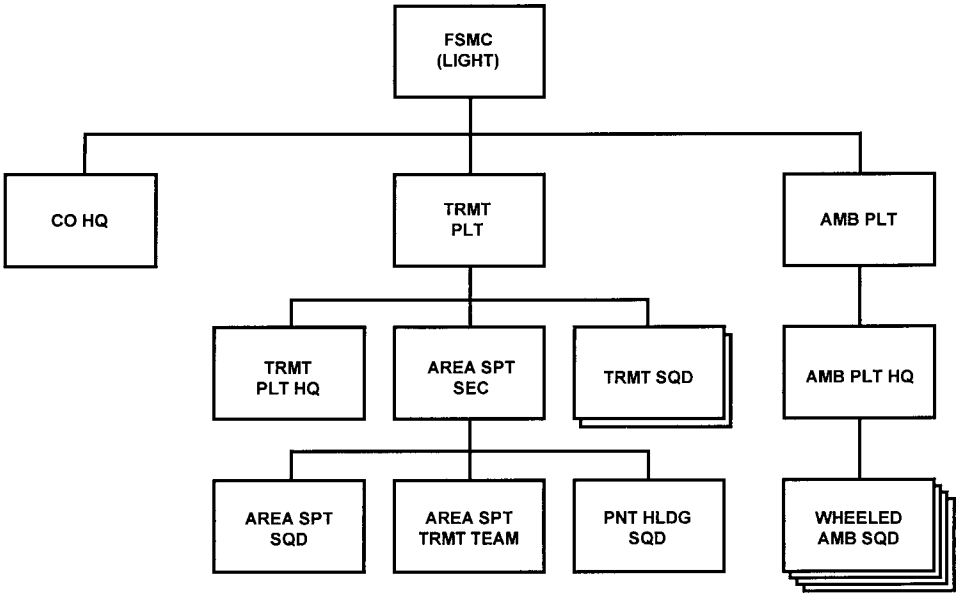

Figure 2-2. Forward support medical company-light (TOE 08298L0), forward support battalion, light division.

c. Forward Support Medical Company-Air Assault.

(1) The FSMC-Air Assault (TOE 08278L0) (Figure 2-3) is organized into a company headquarters section; a treatment platoon (organized into a platoon headquarters with two treatment squads; an area support section with an area support squad, an area support treatment squad and a patient-holding squad); and an ambulance platoon. The ambulance platoon employs a platoon headquarters with three-wheeled ambulance squads (six ambulances).

(2) For communications (see Appendix I), the company employs AM and FM tactical radios, unit-level computers, a manual switchboard with wire telephones, and DNVTs. The company headquarters establishes an FM radio net and an internal wire net for C2. It also establishes an AM net capability for reach-back support.

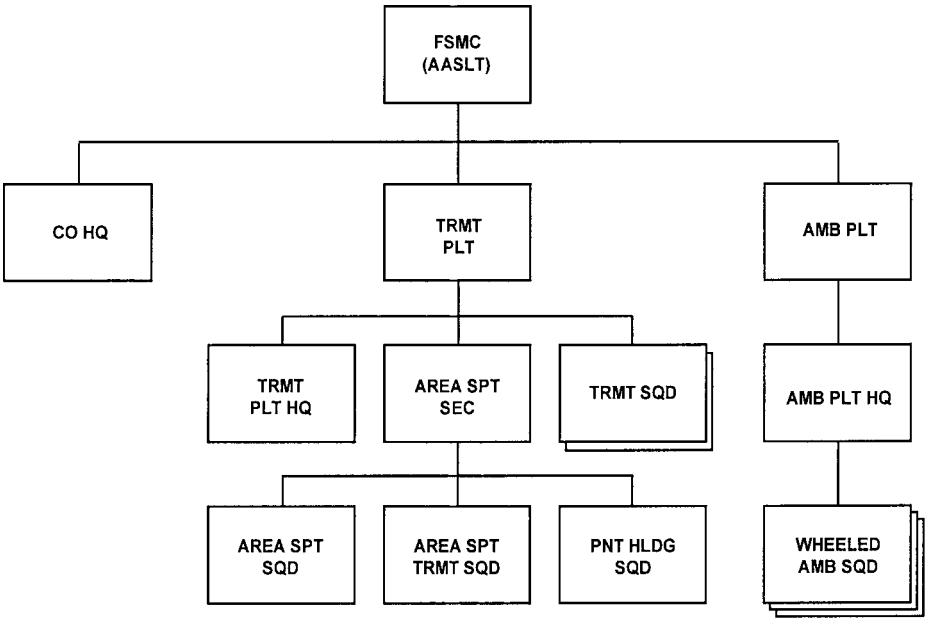

Figure 2-3. Forward support medical company-air assault (TOE 08278L0), forward support battalion, air assault division.

d. Forward Support Medical Company-Airborne.

(1) The FSMC-Airborne (TOE 08268L0) (Figure 2-4) is organized into a company headquarters section; a treatment platoon (organized into a platoon headquarters with two treatment squads; an area support section with an area support squad, an area support treatment squad, and a patient-holding squad); and an ambulance platoon. The ambulance platoon employs a platoon headquarters with four-wheeled ambulance squads (eight ambulances).

(2) For communications (see Appendix I), the company employs AM and FM tactical radios, unit-level computers, a manual switchboard with wire telephones, and DNVTs. The company headquarters establishes an FM radio net and an internal wire net for C2. It also establishes an AM net capability for reach-back support.

e. Forward Support Medical Company-Digitized/Force XXI.

(1) The FSMC-Digitized (TOE 08158F0) (Figure 2-5) is organized into a company headquarters element with a medical logistics (MEDLOG)/medical maintenance capability; a PVNTMED section; a MH section; a treatment platoon (organized into a platoon headquarters with one independent treatment squad; an area support section composed of an area support squad, an area support treatment squad, and a patient-holding squad); and an ambulance platoon, organized into platoon headquarters with three track ambulance squads (six ambulances), and two wheeled ambulance squads (four ambulances).

(2) For rapid mobility of the clearing station, the treatment platoon employs three 5-ton expansible vans (one for the area support squad and two for the area treatment squad).

(3) For communications, the company employs AM and FM tactical radios, unit-level computers, the Force XXI Battle Command Brigade and Below (FBCB2) System (when the system becomes available), the Medical Communications for Combat Casualty Care (MC4) System enablers, and a manual switchboard. The company headquarters establishes an FM radio net and an internal wire net for C2. It also establishes an AM net capability for reach-back support, and its platoons are deployed in the tactical internet for situational understanding of its forward deployed assets. The company and its forward supporting elements are employed in the tactical internet. For additional information on radios and battlefield automation, see Appendix I. See also Appendix F for information on the digitization of the medical company.

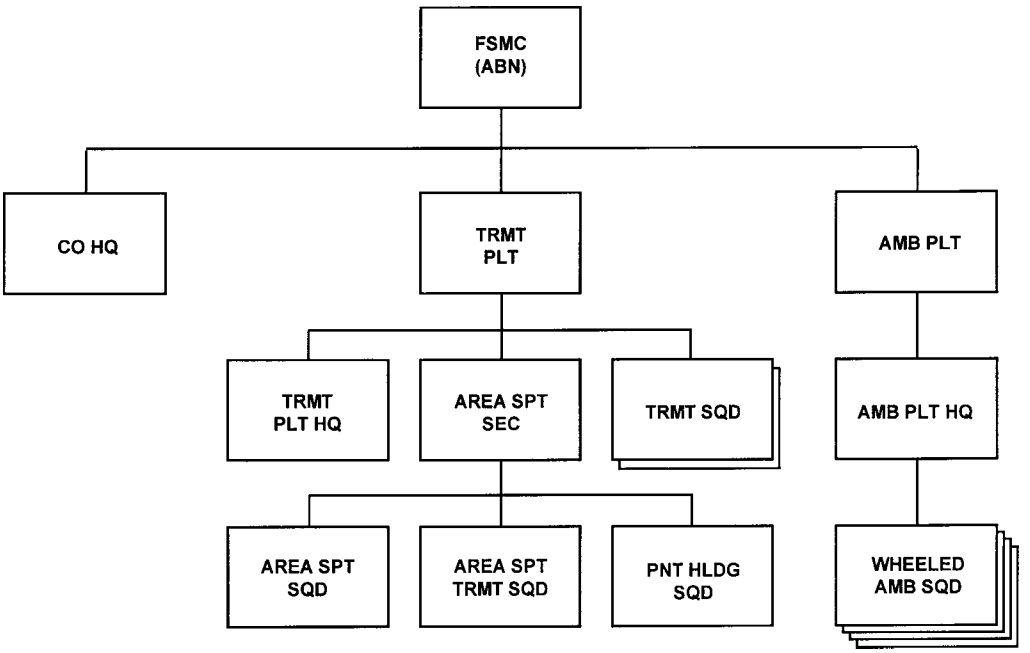

Figure 2-4. Forward support medical company-airborne (TOE 08268L0), forward support battalion, airborne divisions.

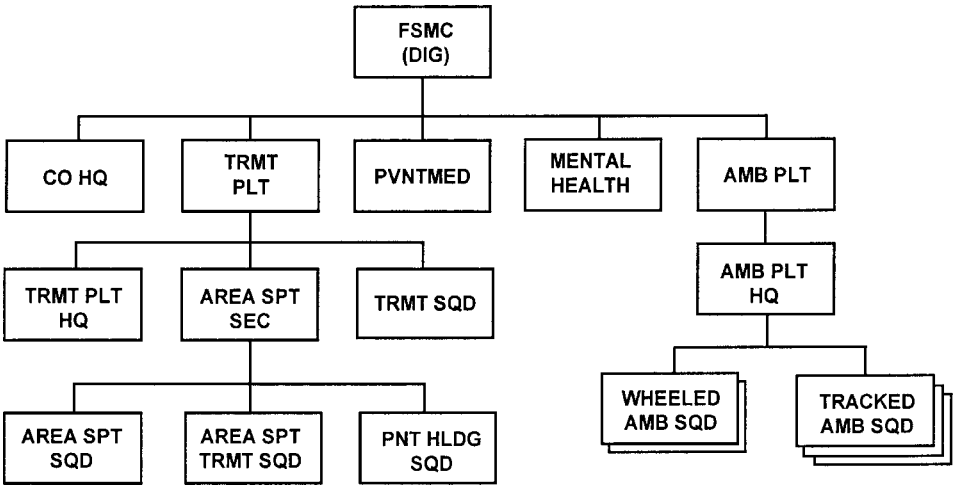

Figure 2-5. Forward support medical company-digitized (TOE 08158F0), forward support battalion, Force XXI division.

2-6. Main Support Medical Company/Division Support Medical Company

a. Mission. The mission of the MSMC and DSMC is to provide Echelons I and II medical care on an area support basis to those units without organic medical assets operating in the division support area (DSA). These companies provide C2 for organic and attached medical elements. The MSMC/DSMC normally locates in the vicinity of the MSB/DSB headquarters and establishes a division clearing station. The MSMC/DSMC may provide treatment teams that can operate independently from the company for limited periods of time.

b. Capabilities. Each MSMC/DSMC is organized to provide care for patients suffering DNBI, BF, and trauma injuries. This medical company establishes a division clearing station/company MTF and provides the following services:

(1) Routine sick call services, treatment of patients with DNBIs and BF, triage of MASCALs, ATM, initial resuscitation and stabilization, and preparation of patients needing further evacuation.

(2) Ground ambulance evacuation and arrangement for air ambulance evacuation of patients from units supported in the DSA. Also, ground ambulance evacuation for patients from an FSMC if that company is unable to hold/treat patients due to its current mission requirements, loss of equipment and personnel, or relocating to a new position.

(3) Operational dental care, which consists of emergency dental care and essential dental care intended to intercept potential dental emergencies.

(4) Limited blood storage.

(5) Class VIII resupply and unit-level medical equipment maintenance for all divisional units and corps medical elements supporting the division.

(6) Medical laboratory and radiology services commensurate with Echelon II/division-level treatment.

(7) Outpatient consultation services for patients referred from unit-level MTFs.

(8) Patient-holding for up to 40 patients able to RTD within 72 hours.

(9) Limited reinforcement and augmentation to FSMCs.

(10) Preventive medicine and environmental health surveillance, inspections, and consultation services for the division.

(11) Neuropsychiatric and MH support and consultation services, to include COSC teams and services throughout the division.

(12) Optometry services to divisional and nondivisional units on area basis.

c. *Basic Organization*. The MSMC/DSMC is organized into seven basic components: a company headquarters, a treatment platoon, an ambulance platoon, a division medical supply office (DMSO), a PVNTMED section, a MH section, and an optometry section. The composition of each of these components differs, depending on the type of division.

d. *Dependency*. Main support medical companies/DSMCs are dependent on appropriate elements of the corps, division and DISCOM for patient evacuation (including air ambulances), CHS operational planning and guidance, and for legal, finance, and personnel and administrative services. It is also dependent on the FSB/DSB for food service and religious support. All of the divisional MSMCs are dependent on the FSB for vehicle maintenance support, except for the FSMC-heavy and the DSMC-Force XXI, which have organic maintenance assets within their company headquarters.

2-7. Organizational Structure of Main Support Medical Company/Division Support Medical Company

a. *Main Support Medical Company-Heavy*.

(1) The MSMC-Heavy (TOE 08057L0) (Figure 2-6) of the heavy division is organized into a company headquarters section; a DMSO: a PVNTMED section, an optometry section; a MH section; a treatment platoon organized into a platoon headquarters with four treatment squads (eight treatment teams), an area support section with an area support squad, an area support treatment squad, and a patient-holding squad; and an ambulance platoon. The ambulance platoon employs a platoon headquarters and five wheeled-ambulance squads (10 ambulances).

(2) For vehicle retrieval and heavy wheeled maintenance, the company headquarters employs a 5-ton truck wrecker (heavy division AOE units only).

(3) For rapid mobility of the clearing station, the treatment platoon employs three 5-ton expansible vans (one for the area support squad and two for the area treatment squad).

(4) For communications (see Appendix I), the company employs AM and FM tactical radios, unit-level computers, a manual switchboard with wire telephones, and DNVTs. The company headquarters establishes an FM radio net and an internal wire net for C2. It also establishes an AM net capability for reach-back support.

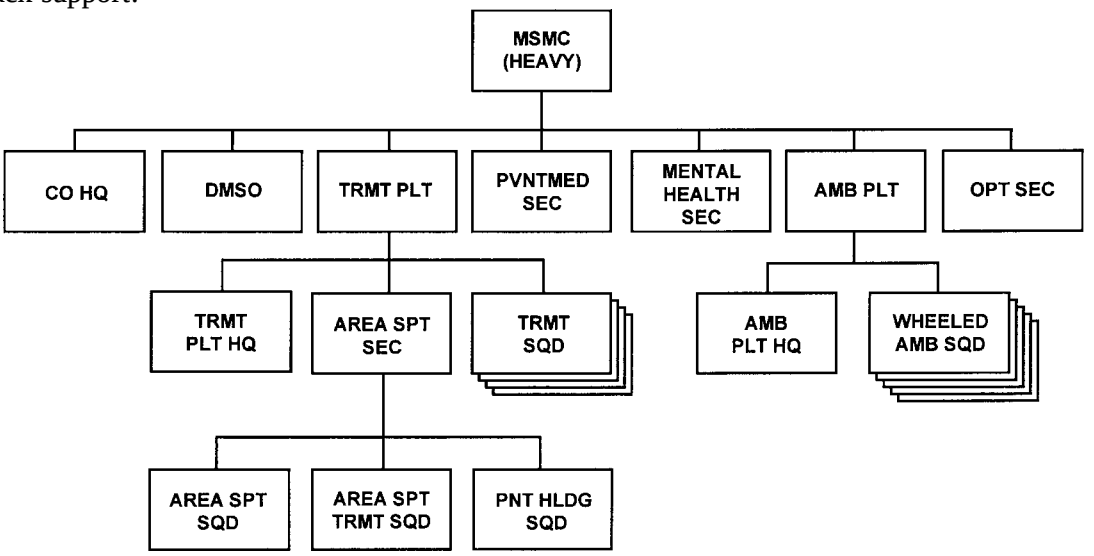

Figure 2-6. Main support medical company-heavy (TOE 08057L0), main support battalion, heavy division.

b. Division Support Medical Company-Force XXI.

(1) The DSMC-Force XXI (TOE 08257F0) (Figure 2-7) is organized into a company headquarters element with a MEDLOG and medical maintenance capability; a PVNTMED section; a MH section; a treatment platoon (organized into a platoon headquarters with a treatment section composed of five independent treatment teams, an area support element composed of an area support squad, an area treatment squad, and a patient-holding squad); and an ambulance platoon that is organized into a platoon headquarters with five wheeled ambulance squads (10 ambulances).

(2) For rapid mobility of the clearing station, the treatment platoon employs three 5-ton expansible vans (one for the area support squad and two for the area treatment squad).

(3) For communications, the company employs AM and FM tactical radios, unit-level computers, the FBCB2 system (when the system becomes available), the MC4 system enablers, and a

manual switchboard. The company headquarters establishes an FM radio net and an internal wire net for C2. It also establishes an AM net capability for reach-back support, and its platoons are deployed in the tactical internet for situational understanding of its forward deployed assets. The company and its forward support elements (FSEs) are employed in the tactical Internet. For additional information on radios and battlefield automation, see Appendix I. See also Appendix F for information on digitization of medical company.

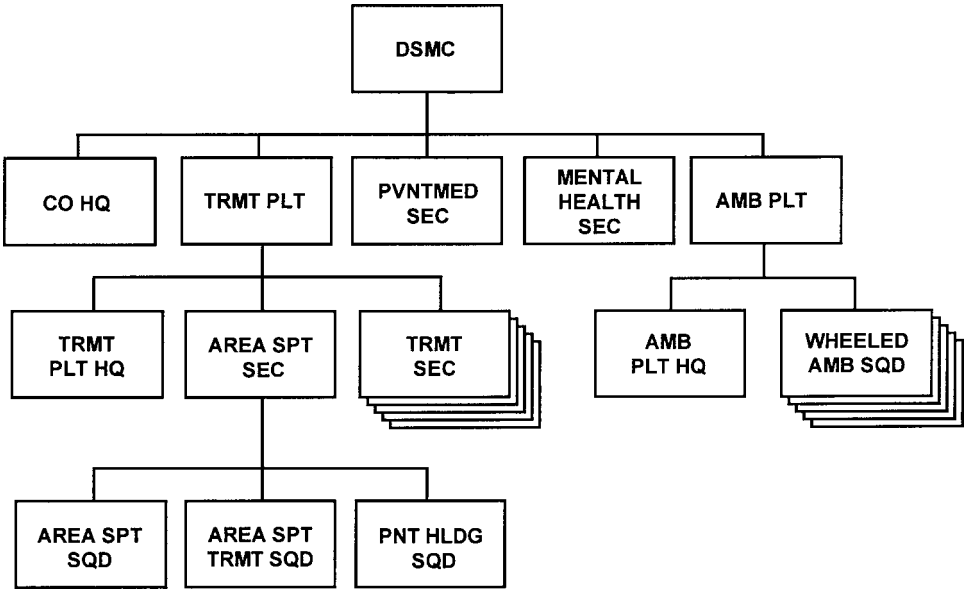

Figure 2-7. Division support medical company-Force XXI (TOE 08257F0), division support battalion, Force XXI division.

c. Main Support Medical Company-Light.

(1) The MSMC-Light (TOE 08297L0) (Figure 2-8) is assigned to the light division. It is organized into a company headquarters section; a DMSO; a PVNTMED section; an optometry section; a MH section; a treatment platoon (organized into a platoon headquarters with two independent treatment squads [four treatment teams]; an area support section with an area support squad, an area treatment squad, and a patient-holding squad); and an ambulance platoon. The ambulance platoon employs a platoon headquarters and four wheeled-ambulance squads (eight ambulances).

(2) For communications (see Appendix I), the company employs AM and FM tactical radios, unit-level computers, a manual switchboard with wire telephones, and DNVTs. The company headquarters establishes an FM radio net and an internal wire net for C2. It also establishes an AM net capability for reach-back support.

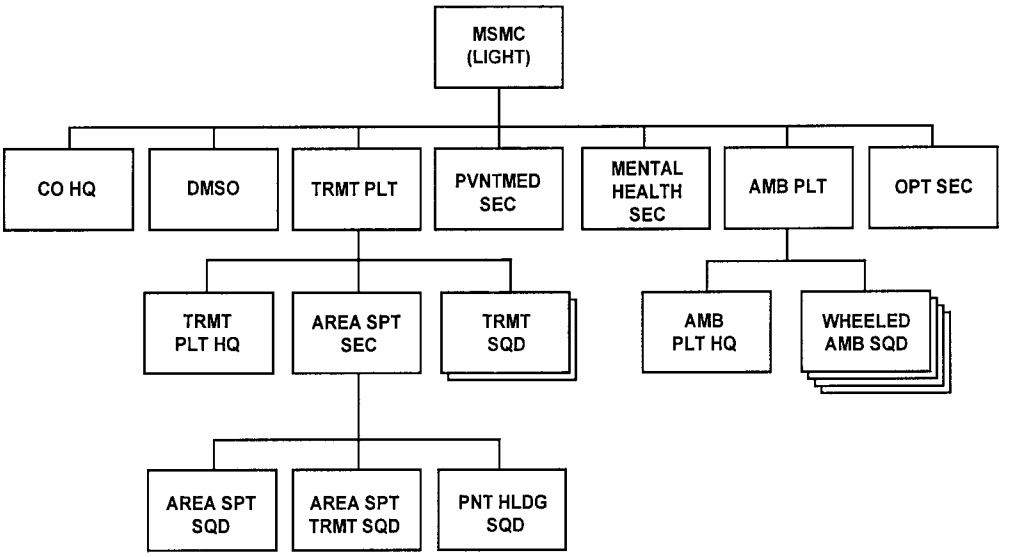

Figure 2-8. Main support medical company-light (TOE 08297L0), main support battalion, light division.

d. Main Support Medical Company-Air Assault.

(1) The MSMC-Air Assault (TOE 08277L0) (Figure 2-9) is organized into a company headquarters section; a DMSO; a PVNTMED section; a MH section; and an optometry section. It employs a treatment platoon that is organized into a platoon headquarters, an area support section composed of an area support squad, an area support treatment squad, an FST (see note below), and a treatment squad (two treatment teams). The company's ambulance platoon employs a platoon headquarters and three-wheeled ambulance squads (six ambulances).

NOTE

Operationally, the air assault FST is deployed forward in DS of a brigade receiving heavy casualties. It is normally under the technical control of the division surgeon with tasking through the MSB support operations section (refer to FM 8-10-25).

(2) For communications (see Appendix I), the company employs AM and FM tactical radios, unit-level computers, a manual switchboard with wire telephones, and DNVTs. The company headquarters establishes an FM radio net and an internal wire net for C2. It also establishes an AM net capability for reach-back support.

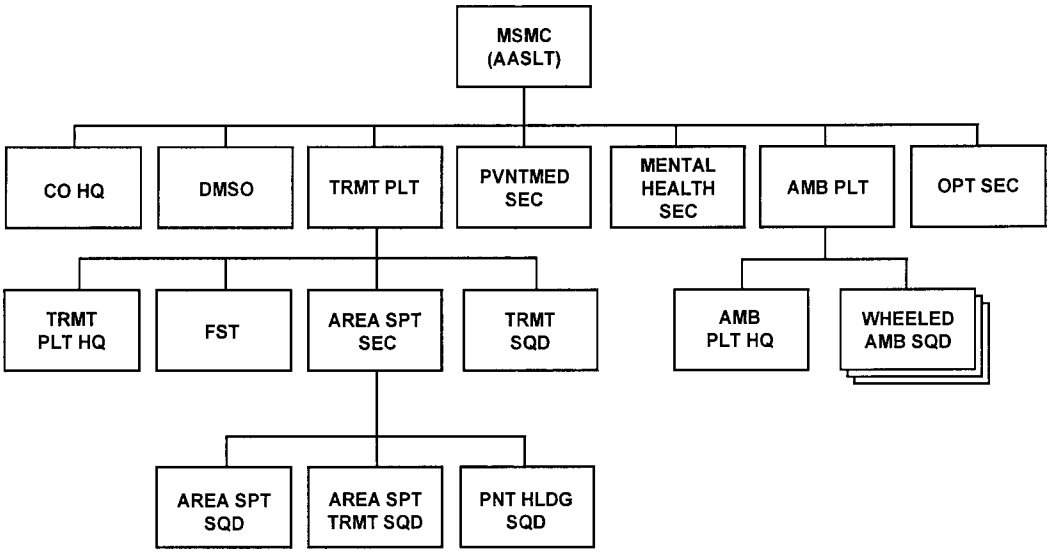

Figure 2-9. Main support medical company-air assault (TOE 08277L0), main support battalion, air assault division.

e. Main Support Medical Company-Airborne.

(1) The MSMC-Airborne (TOE 08267L0) (Figure 2-10) is organized into a company headquarters section; a DMSO: a PVNTMED section, a MH section; and an optometry section. It employs a treatment platoon that is organized into a platoon headquarters, an area support section composed of area support squad, an area support treatment squad, an FST (see note below), and two independent treatment squads (four treatment teams). The company's ambulance platoon employs a platoon headquarters and four-wheeled ambulance squads (eight ambulances).

NOTE

Operationally, the airborne FST is deployed forward in DS of a brigade receiving heavy casualties. It is normally under the technical control of the division surgeon with tasking through the MSB support operations section.

(2) For communications (see Appendix I), the company employs AM and FM tactical radios, unit-level computers, a manual switchboard with wire telephones, and DNVTs. The company headquarters establishes an FM radio net and an internal wire net for C2. It also establishes an AM net capability for reach-back support.

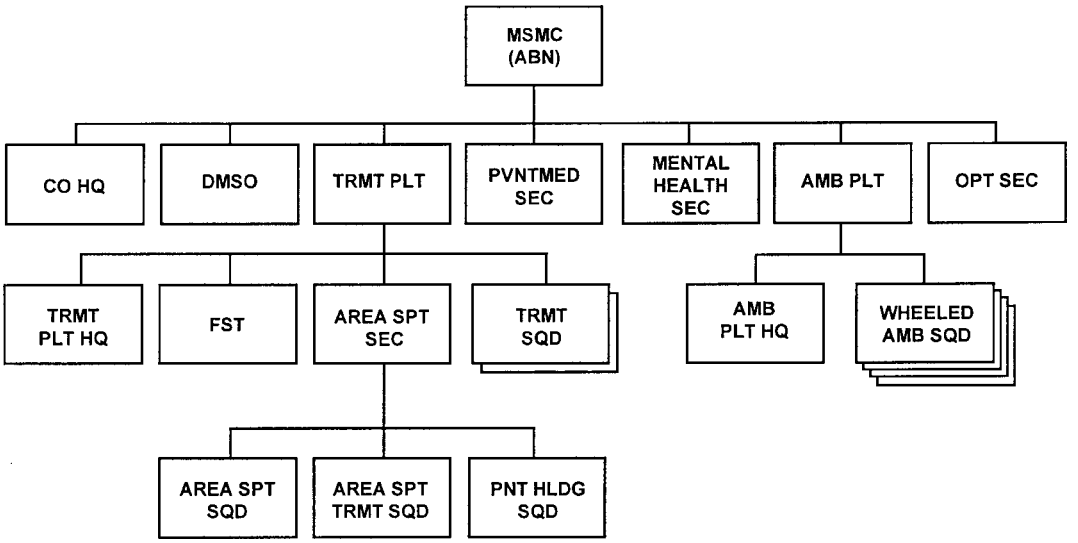

Figure 2-10. Main support medical company-airborne (TOE 08267L0), main support battalion, airborne division.

Section II. MEDICAL COMPANIES IN SEPARATE BRIGADES, ARMORED CAVALRY REGIMENTS, AND INTERIM BRIGADE COMBAT TEAMS

2-8. Separate Brigade Overview

a. Both the staffing and the equipping of separate brigades are geared toward semi-independent operations. They can serve as planning headquarters for larger reserve forces or major contingency operations. Separate brigades normally conduct operations under the corps command. They can also serve as division reinforcement for short periods. The headquarters and headquarter companies of separate brigades include support elements that would normally be found at division.

b. Separate brigades conduct operations like the divisional brigade; they can fight directly under corps control or perform rear operations, flank security mission operations, or covering force operations. They can also serve as the corps reserve, or reinforce a division. Separate brigades also have their own cavalry troop, engineer company, military intelligence company, military police platoon, artillery battalion, and support battalion for DS CSS with an imbedded medical company. See FM 7-30 and FM 63-1 for detailed information on the organization and functions of the different brigades.

2-9. Medical Company-Heavy Separate Brigade

a. *Mission*. Same as paragraph 2-4*a* above.

b. *Capabilities*. Same as 2-4*b* above.

c. *Basic Organization*. This unit is organized into seven basic components: a company headquarters; a treatment platoon; an ambulance platoon; a DMSO; a PVNTMED section; a MH section; and an optometry section.

d. *Dependency*. The medical company-heavy separate brigade is dependent on appropriate elements of the corps for patient evacuation (including air and ground ambulance support from the BSA). It is dependent on its brigade and battalion headquarters for CHS operational planning and guidance and for legal, finance, and personnel and administrative services. It is also dependent on its parent support battalion for food service and religious support.

NOTE

The company has organic maintenance assets within its company headquarters and should not require unit-level maintenance support.

2-10. Organizational Structure and Tactical Capabilities of the Medical Company-Heavy Separate Brigade

a. The Medical Company, Heavy Separate Brigade (HSB) (TOE 08437L0) (Figure 2-11) is organized into a company headquarters section; a brigade medical supply office (BMSO), a PVNTMED section, an optometry section; a MH section; a treatment platoon, and an ambulance platoon. The treatment platoon is organized into a platoon headquarters with three treatment squads (six treatment teams), an area support section with an area support squad, an area treatment squad, and a patient-holding squad. The ambulance platoon employs a platoon headquarters, three M113A1 tracked ambulance squads (six M113A1 tracked ambulances) and three-wheeled ambulance squads (6-wheeled ambulances) with a combined total of 12 ambulances.

b. For vehicle retrieval and heavy-wheeled maintenance, the company headquarters employs a 5-ton truck wrecker.

c. For tailgate operations and rapid mobility of the clearing station, the treatment platoon employs three 5-ton expansible vans (one for the area support squad and two for the area support treatment squad).

NOTE

The 5-ton truck wrecker and the 5-ton expansible van are also employed by medical companies (TOE 08438L000 and TOE 08438L100) of the separate infantry brigade.

d. For communications (see Appendix I), the company employs AM and FM tactical radios, unit-level computers, a manual switchboard with wire telephones, and DNVTs. The company headquarters establishes an FM radio net and an internal wire net for C2. It also establishes an AM net capability for reach-back support.

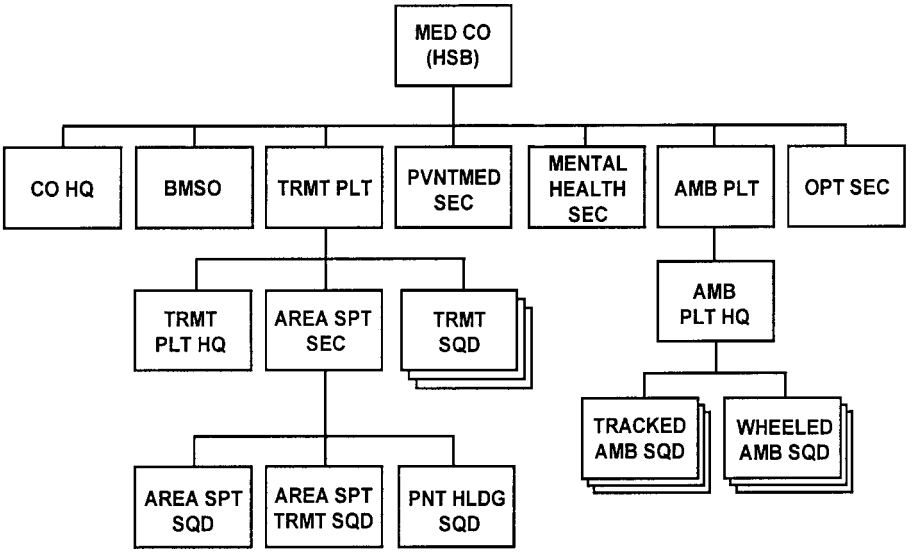

Figure 2-11. Medical company-heavy separate brigade (TOE 08437L0), support battalion, heavy separate brigade.

2-11. Armored Cavalry Regiment Overview

a. The ACR is a self-contained combined arms organization composed of armored cavalry squadrons (ACS), an aviation squadron, a support squadron, and separate CS companies and batteries. The ACR is a separate unit that supports the corps or a joint task force (JTF). Corps CS units and divisional maneuver battalions often reinforce it. The ACR operates independently over a wide area and at extended distances from other units. The ACR is a highly mobile, armored force capable of fighting the fully mechanized threat in the environmental states of war or conflict.

b. Armored cavalry regiments are provided DS CSS by an organic support squadron with an imbedded medical troop providing CHS.

c. See FM 17-95 for additional information on the organization and functions of the ACR. Also, see FM 63-1 on the ACR support squadron's organization and operations.

2-12. Medical Troop-Armored Cavalry Regiment

a. *Mission*. Same as 2-4*a* above except it supports the ACR.

b. *Capabilities*. Same as 2-4*b* above except it has organic mental health and preventive medicine sections.

c. *Basic Organization*. The medical troop-ACR is organized into seven basic components: a company headquarters, a treatment platoon, an ambulance platoon, a regimental medical supply office (RMSO), a PVNTMED section, and an optometry section.

d. *Dependency*. The medical troop-ACR is dependent on appropriate elements of the corps and the support squad for patient evacuation (including air ambulance), CHS operational planning, guidance, legal, finance, and personnel and administrative services. It is also dependent on the headquarters and headquarters troop of the support squad for food service, religious, and vehicle maintenance support.

2-13. Organizational Structure and Tactical Capabilities of the Medical Troop-Armored Cavalry Regiment

a. The Medical Troop-ACR (TOE 08489L0) (Figure 2-12) is organized into a troop headquarters section; a treatment platoon that is further organized into a platoon headquarters, an area support element with an area support squad, two area support treatment squads; an FST, and a patient-holding squad. The platoon also employs two independent treatment squads that may be deployed in DS of maneuver squadrons' medical platoons. The troop is also organized with a RMSO and an ambulance platoon. The ambulance platoon employs a platoon headquarters and six-wheeled ambulance squads (12 ambulances).

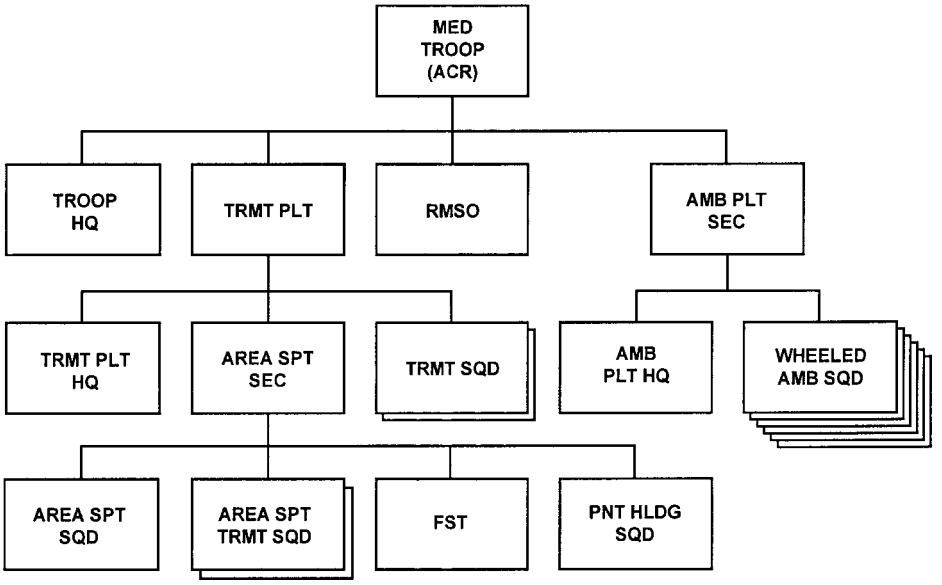

Figure 2-12. Medical troop-ACR (TOE 08489L0), support squadron armored cavalry regiment.

b. For communications (see Appendix I), the company employs AM and FM tactical radios, unit-level computers, a manual switchboard with wire telephones, and DNVTs. The company headquarters establishes an FM radio net and an internal wire net for C2. It also establishes an AM net capability for reach-back support.

2-14. Brigade Combat Team Overview

a. The BCT is a full spectrum, combat force. It has use in all operational environments against all projected future threats, but it is designed and optimized primarily for employment in small scale contingency operations in complex and urban terrain, confronting low-end and mid-range threats that may employ both conventional and asymmetric capabilities. The BCT deploys very rapidly, executes early entry, and conducts effective combat operations immediately on arrival to prevent, contain, stabilize, or resolve a conflict through shaping and decisive operations. The BCT participates in a major theater war, with augmentation, as a subordinate maneuver component within a division or corps and in a variety of possible roles. The BCT also participates with appropriate augmentation in stability operations and support operations as an interim entry force and/or as a guarantor to provide security for stability forces by means of its extensive combat capabilities.

b. The BCT is a divisional brigade that is strategically responsive, rapidly deployable, agile, versatile, lethal, survivable, and sustainable. It is designed to optimize its organizational effectiveness and seeks to balance the traditional domains of lethality, mobility and survivability with the domains required for responsiveness, deployability, sustainability and a reduced in-theater footprint. It is nontraditional with respect to design, the deployment process, and manner of employment. Its two core qualities are high mobility (strategical, operational, and tactical) and its ability to achieve decisive action through dismounted infantry assault.

c. Interim brigade combat teams are provided DS CSS by an organic support battalion with an imbedded medical company providing CHS.

2-15. Brigade Support Medical Company, Support Battalion, Interim Brigade Combat Team

a. The BSMC (TOE 084108F0), BSB, BCT provides Echelon II CHS in support of those battalions with organic medical platoons. The company also provides both Echelons I and II medical treatment to those units deployed without organic medical assets that operating in the BCT's AO. The BSMC provides C2 for its organic elements and may provide operational control (OPCON) of medical augmentation elements. The BSMC locates in the vicinity of the BSB headquarters and establishes a brigade clearing station/MTF in the BSA.

b. A complete discussion on the organization and functions of the BSMC is provided in Appendix F.

2-16. Area Support Medical Company, Area Support Medical Battalion (Corps and Echelons above Corps)

a. The ASMCs (TOE 08456A0) of the headquarters and headquarters detachment, ASMB (TOE 08457A0) are organized as depicted in Figure 2-13 and perform functions similar to those of divisional and other nondivisional medical companies.

b. The ASMCs are employed primarily in the corps rear and support areas of the EAC/COMMZ. They are deployed to a geographical area to provide area CHS, or may be deployed to provide CHS for designated units. The ASMCs also establish clearing stations and provide Echelons I and II CHS in a wide area (normally, an area or sector of the size established and supported by a corps support group or corps support battalion). Medical treatment squads/teams of the ASMCs may be deployed to establish treatment stations and provide Echelon I support to concentrations of nondivisional units that do not have organic medical capabilities.

c. A complete discussion on the organization, mission and functions of the ASMC and the ASMB is provided in FM 4-02.24.

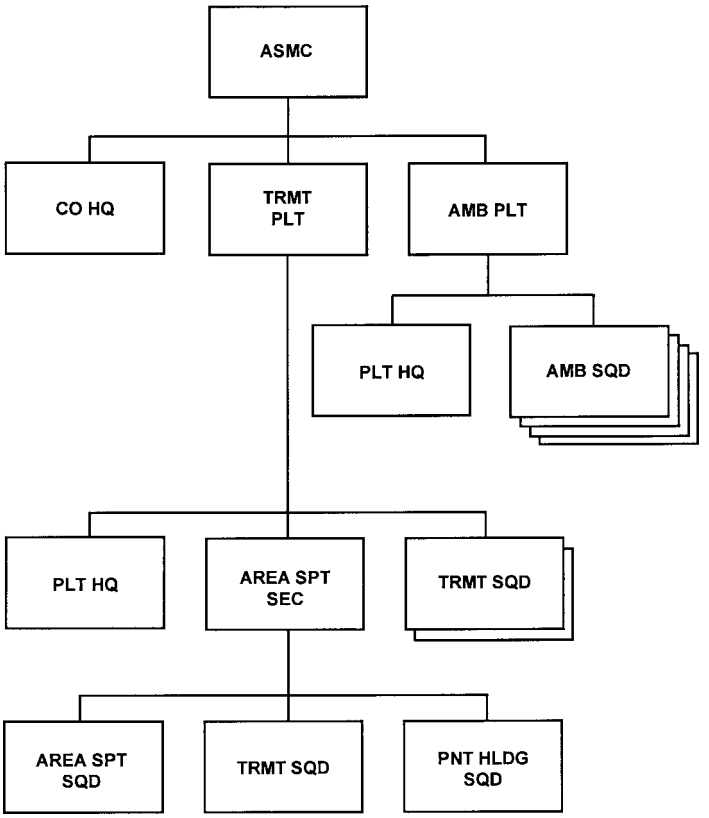

Figure 2-13. Area support medical company (TOE 08456A0), area support medical battalion (TOE 08457A0), medical brigade (corps/echelons above corps).

CHAPTER 3

MEDICAL COMPANY OPERATIONS

Section I. ORGANIZATION AND FUNCTIONS OF THE MEDICAL COMPANY

3-1. General

The mission, assignment, capability, basic organization and dependency of all medical companies were discussed in Chapter 2. This chapter provides information on the organizational design of the medical company and the functions performed by its subordinate elements in support of the mission.

3-2. Headquarters Section

The company headquarters section is organized into a command element; a support element; a unit supply element; a medical supply and medical maintenance element; and an operations and communications element. It provides general (unit) supply, medical supply/resupply, arms maintenance, NBC defensive operations, and communications-electronics (CE) support to organic and attached elements. For communications, the company headquarters employs AM and FM tactical radios, tactical computers, and a manual switchboard. Personnel of this section supervise unit operations, general supply, medical supply, communications, and power-generation operations.

a. *Command Element*. The command element is responsible for providing billeting, security, training, administration, and discipline for assigned personnel. This element provides C2 of its assigned and attached personnel. It is typically staffed with a company commander, a field medical assistant, and a first sergeant (1SG).

(1) *Company commander*. Currently, the medical company commander positions are documented 05A, AMEDD immaterial, meaning any qualified AMEDD officer can assume command. When the medical company/troop commander is not a physician, medical decisions and technical supervision of any physician assigned to the medical company/troop is performed by the treatment platoon leader since that position is always designated as a physician's position. The medical company commander keeps the support battalion/squadron commander informed on the CHS aspects of battalion/squadron operations and the health of the command. He regularly attends headquarters staff meetings to obtain information to facilitate the execution of medical operations. He provides staff estimates and assists the headquarters staff and the command surgeon's section/medical planner, as required, with the development of the support battalion/squadron and brigade/regiment CHS plan.

(2) *Field medical assistant/executive officer*. The field medical assistant/executive officer (XO) is the company's second in command and its primary internal CSS/medical planner and coordinator. He and the company headquarters personnel operate the company command post (CP) and net control station (NCS) for both radio and digital traffic.

(3) *First sergeant*. The 1SG is the company's senior NCO and normally is its most experienced soldier. He is the commander's primary medical and tactical advisor and he is an expert in

individual and NCO skills. He is the company's primary internal CSS operator and helps the commander plan, coordinate, and supervise all logistical activities that support the company's mission. He operates where the commander directs or where his duties require him.

b. *Headquarters Support Element*. The headquarters support element (in the AOE medical company) is normally comprised of the signal support, maintenance specialist, decontamination specialist, NBC specialist, and the armorer. These personnel perform those functions for the company in their areas of expertise. This element also operates the company switchboard and serves as the company NCS for the company's operations nets' FM and AM radios.

c. *Unit* S*upply Elements*. The unit supply element, under the supervision of the unit supply sergeant, is responsible for managing, requesting, receiving, issuing, storing, and maintaining all classes of supplies and turn-in supplies and equipment for the company. It also employs the Unit Level Logistics System (ULLS)/Supply Officer (US Army)(S4) (see note below) for automated supply activities. The unit supply sergeant coordinates all general supply, equipment requirements, and actions with the 1SG and the logistics support operations officer of the parent battalion/squadron.

NOTE

The ULLS/S4 is scheduled to be replaced by the objective Global Combat Support System-Army (GCSS-A) Supply Property Book Module.

d. *Medical Supply and Medical Maintenance Element*.

(1) The medical supply element, under the supervision of the MEDLOG sergeant, establishes the Class VIII distribution point and manages Class VIII. The MEDLOG sergeant also supervises the activities of the MEDLOG specialist and the medical maintenance repairer. He coordinates Class VIII requirements through the company XO with the FSB support operations section's health service support officer (HSSO), (in AOE divisions) with the DMSO and (in the Force XXI division) medical materiel management center (MMMC) also with the brigade surgeon's section.

(2) This medical supply element issues Class VIII supplies to all treatment elements of the company, monitors the expiration of perishable medication, and requisitions accordingly. All blood products for the company are distributed to the treatment platoon (area support squad medical laboratory [MEDLAB] element) for storage, managing, monitoring, and further distribution in the company or to a supporting FST. The treatment platoon/MEDLAB element is responsible for the preparation of the blood situation report (refer to Appendix E).

NOTE

Blood products are not issued to Echelon I/BAS MTFs.

(3) *Medical Maintenance Element*. The medical maintenance element consist of one medical equipment repairer. He provides operational-level and unit-level medical equipment maintenance/repair for the company and supported units.

3-3. Treatment Platoon

The treatment platoon is composed of a platoon headquarters, treatment squads, an area support squad, and an area treatment squad. For communications, the platoon employs up to seven tactical radios. The digitized medical companies also use FBCB2 and in the future MC4 enablers when fielded for situational awareness and understanding and for functional area operations (refer to Chapter 2 and Appendix F).

a. *Headquarters Element*. The platoon headquarters is the C2 element of the platoon. It determines and directs the disposition of patients and submits requests through the company CP for their evacuation of patients to supporting hospitals. During hasty displacements the treatment platoon headquarters is used as an alternate company CP. The headquarters element directs, coordinates, and supervises platoon operations. It directs the activities of the clearing station and monitors Class VIII supplies, blood usage and inventory levels, and keeps the commander informed. The headquarters element is responsible for the management of platoon operations, operations security (OPSEC), communications, medical administration (see Appendices E and K), organizational training, supply transportation, patient accountability, statistical reporting functions, blood situation reporting. The platoon headquarters element is composed of a platoon leader (04, 62B, Medical Corps [MC]), a senior PA (04, 65D, Army Medical Specialist Corps [SP]), a field medical assistant (02, 70B67, Medical Service Corps [MS]), a platoon sergeant (E7, 91W40), and a patient administration specialist (E4, 91G).

b. *Treatment Squad Elements*. The treatment squad element can contain up to four treatment squads, depending on the type company assigned. Each squad is composed of a field surgeon (62B, 03, MC), a PA (65D, 03, SP), three health care sergeants (one 91W30, E6, and two 91W20, E5), and three health care specialists (one 91W, E4, and two 91W, E3). These squads provide emergency and routine sick call treatment to soldiers assigned to supported units. The squads can perform their functions while located in the company area, or they can operate independently of the medical company/troop for limited periods of time. Each squad has the capability to split and operate as separate treatment teams (Teams A and B) for limited periods of time. While operating in these separate modes, they may operate up to four treatment stations. They can be assigned to reinforce or reconstitute similar treatment squads. These squads can operate for up to 48 hours while separated from their parent unit. They are also used to augment the clearing station operation during MASCAL situations (see Appendix C). For medical companies/troops deployed in the BSA or the regimental support area (RSA), these squads can further be used to—

- Provide augmentation to maneuver battalion/squadron medical platoons. They can routinely be placed under attachment less OPCON to a maneuver battalion.

- Reinforce/reconstitute maneuver unit medical platoons in TF operations, during periods of high patient densities, in areas with a temporary troop concentration (such as marshalling areas), or during MASCAL situations.

- Facilitate the movement of the clearing station/treatment platoon MTF from one location to another. A treatment squad can be echeloned forward to establish an MTF at a new location. The echeloning of elements allows the old treatment site to remain operational until the new site is established.

- Regenerate severely attrited battalion aid stations.

- Used in conjunction with AXP or positioned at designated points in the ambulance shuttle system, when required.

c. *Area Support Squad Elements*. The area support squad elements of the treatment platoon are composed of an area treatment squad, an area support squad, and a patient-holding squad. These squads form the clearing station/medical company. The area support treatment squad provides trauma care and routine sick call services to personnel assigned to units located in the supported area of the medical company/troop. The area support squad provides operational dental care that include emergency and essential dental services, limited laboratory and radiological services, and blood support commensurate with Echelon II treatment facilities. The patient-holding squad provides up to 40 cots (40 cots for heavy division and 20 cots for light divisions) for patients requiring minimal treatment. Patients held in the patient-holding area are those patients who are expected to be RTD within 72 hours from the time they are held for treatment.

NOTE

Area support squad elements are not used to reinforce or reconstitute supported units' medical elements. Also, they are normally not used on the area damage control team.

(1) *Area treatment squad*. The area treatment squad is identical in personnel and equipment as the treatment squads of the treatment section. It is the base medical treatment element of a clearing station. It provides sick call services and initial resuscitative treatment (ATM and EMT) for supported units. For communications, the squad employs FM radios and is deployed in the medical/troop radio and wires communications nets. Also, for communications, the digitized medical companies have an FBCB2 and when fielded a MC4 capability and can be employed in the tactical Internet for tactical/medical situational understanding.

(2) *Area support squad*. The area support squad includes the dental and diagnostic support elements of the clearing station. The diagnostic element is composed of a MEDLAB and has field radiology capability. It provides for basic services commensurate with Echelon II medical treatment. The area support squad is typically staffed with a comprehensive dental officer (03, 63B, Dental Corps [DC]), one dental specialist (E4, 91E10), one MEDLAB sergeant (E5, 91K20), one MEDLAB specialist (E4, 91K10), one radiology sergeant (E5, 91P20), and one radiology specialist (E4, 91P10). The dental officer supervises the activities of the area support squad.

NOTE

Only under the Force XXI design is there an additional MEDLAB specialist and a radiology specialist. The AOE units only have one MEDLAB specialist and one radiology specialist.

(*a*) *Dental element*. The dental element provides operational dental care, which consists of emergency and essential dental care. Essential dental care is intended to intercept potential dental emergencies.

(*b*) *Medical laboratory element*. The MEDLAB element performs clinical laboratory and blood banking procedures to aid physicians and PAs in the diagnosis, treatment, and prevention of diseases. Laboratory functions include performing elementary laboratory procedures consistent with the Echelon II laboratory capabilities.

(*c*) *Radiology element*. The radiology element operates radiological equipment consistent with the Echelon II x-ray MES. This element performs routine clinical radiology procedures to aid physicians and PAs in the diagnosis and treatment of patients.

d. *Patient-Holding Squad*. The patient-holding squad operates the holding area of the clearing station. The patient holding area is staffed with a medical-surgical nurse (03, 66H, Army Nurse Corps [AN]), two health care sergeants (E5, 91W20), and two health care specialists (E4/E3, 91W10). The patient holding area is equipped to provide care for up to 40 patients. Normally, only those patients awaiting evacuation or those requiring treatment of minor illness or injuries are placed in the patient-holding area. Neuropsychiatric patients and BF/stress-related casualties, who are expected to be RTD within 72 hours, may also be placed in the patient-holding area. The patient-holding squad works under the direct super-vision of a physician. The medical-surgical nurse assigned to the patient-holding squad provides nursing care supervision. Since Echelon II facilities, such as a medical company or troop, do not have an admis-sion capability, patients may only be held at this facility, but are not counted as hospital admissions. If recovery or RTD is not expected within 72 hours, the patients are evacuated to a supporting hospital for admission.

e. *Organic Forward Surgical Team*.

(1) The FST (TOE 08518LB) is organic to the MSMCs of the airborne/air assault division and the medical troop of the ACR. A detailed discussion on the staffing, function, and operation of the FST is provided in FM 8-10-25.

(2) While the FST is located with MSMC (airborne/air assault), it is routinely deployed forward to augment the FSMCs based on the division CHS plans and the division surgeon's recom-mendations. Tasking for the FST is accomplished through appropriate command channels.

f. *Corps Forward Surgical Team (TOE 08518LA) Augmentation*. When the FST augments a FSMC, they will make provisions for the following support of the unit:

(1) Triage of trauma patient to be treated at the FST facility.

(2) Coordination and arrangement for logistical support to include Class I, water, and electrical power generation support.

(3) Medical laboratory support.

(4) Backup holding support for patients that overflow the FST recovery facility.

(5) Medical evacuation and tracking of surgical patients seen by the FST.

3-4. Ambulance Platoon

a. *Headquarters*. The ambulance platoon headquarters element is staffed with a platoon leader (02, 70B, MS) and a platoon sergeant (E7, 91W40). It provides C2 for ambulance platoon operations. The ambulance platoon headquarters element maintains communications to direct ground ambulance evacuation of patients. It provides ground ambulance evacuation support for supported maneuver battalions/squadrons and for supported units operating in the rear areas. The ambulance headquarters element performs route reconnaissance and develops and issues graphic overlays to all its ambulance teams. It also coordinates and establishes AXPs for both air and ground ambulances, as required. Refer to Appendix F for ambulance platoon operations in digitized medical companies.

b. *Ambulance Squads*. Ambulance squads provide ground ambulance evacuation of patients from supported BASs/unit aid stations back to the clearing station/FSMC MTF that is located in the BSA. An ambulance squad consists of two ambulance teams (two ambulances, wheel or tracked vehicles). Each wheeled-ambulance team is composed of an emergency care sergeant (E5, 91W20) and an ambulance/aide driver (E4, 91W10). A tracked-ambulance team consists of three personnel, one emergency care sergeant (91W20)/track commander and two ambulance/aide drivers (91W10). Ambulance squad personnel perform EMT, evacuate patients, and provide for their continued care en route**.** They also operate and maintain assigned communication and navigational equipment. Ambulance squad personnel provide the EMT that is necessary to prepare patients for movement and also provide en route care. They perform preventive maintenance checks and services (PMCS) on ambulances and associated equipment. Ambulance squad personnel maintain supply levels for the ambulance MESs. They ensure that appropriate property exchange of medical items (such as litters and blankets) is made at sending and receiving MTF.

NOTE

Tracked ambulances are found the armored and mechanized infantry divisions.The airborne air assault and light infantry have only wheeled ambulances organic to their medical companies.

3-5. Preventive Medicine Section and Functions

a. Preventive medicine sections are organic to the MSMC, DSMC, FSMC in the divisions and the BSMC of the interim brigade combat team (IBCT) and in the medical company of the heavy separate brigade, and the medical troop of the ACR. The PVNTMED section is also found in the ASMB headquarters (see FM 4-02.24). The PVNTMED section found in the MSMC and in the ASMB normally have enough personnel to staff three PVNTMED teams. Personnel assigned to the MSMC PVNTMED section include a PVNTMED officer (04, 60C00, MC), an environmental science officer (03, 72D67, MS), PVNTMED NCOs (an E7, 91S40 and an E5, 91S20), and five PVNTMED Specialists (three 91S10 E4s and two E3s). The PVNTMED section located in the Force XXI FSMCs and BSMC of the IBCT are staffed with an Environmental Science Officer, (02, 72D67, MS) and a PVNTMED Specialist (E4, 91S10).

b. The PVNTMED section assigned of all medical companies/troops has a primary responsibility for supervising the unit's PVNTMED program as described in AR 40-5. The section ensures PVNTMED measures are implemented to protect personnel against food-, water-, and arthropodborne diseases, as well as environmental injuries.

c. The section provides advice and consultation in the area of health threat assessment, force health protection, environmental sanitation, epidemiology, sanitary engineering, and pest management. Through routine surveillance, they identify actual and potential health hazards, recommend corrective measures, and assist in training IBCT personnel in disease prevention programs

d. Functions of the PVNTMED section include—

- Assisting the commander in preparing staff estimates by identifying the health threat and risk assessments.

- Assisting the higher headquarters in determining requirements for medical intelligence assessments, particularly with respect to toxic industrial chemical and disease prevalence.

- Assisting units in the training of PVNTMED measures (PMM) against heat and cold injuries, as well as food-, water-, and arthropodborne diseases.

- Coordinate with supporting veterinary teams for conducting and implementing food safety and quality assurance surveillance and assisting in foodborne and zoonotic disease surveillance and control.

- Monitoring the division/brigade immunization program.

- Monitoring and approving the health-related aspects of water and ice sources, to include production, distribution, and consumption.

- Conducting health surveillance of organic and attached units, to include monitoring disease and injury incidence to optimize early recognition of disease trends and to initiate preemptive disease suppression measures.

- Conducting epidemiological investigations of disease outbreaks and recommending PMM to minimize effects.

- Collecting and shipping specimens to the supporting medical laboratory to rule out or confirm presence of a medical threat.

- Coordinating for NBC reconnaissance vehicle to assist with environmental monitoring to verify presence of industrial chemical and low-level radiation in the environment.

- Conducting limited entomological investigation and control measures.

- Monitoring environmental and meteorological conditions, assessing their health-related impact on operations, and recommending PMM to minimize heat or cold injuries, as well as selected arthropodborne diseases.

- Training unit field sanitation teams for assigned or attached units in accordance with (IAW) FM 21-10-1.

- Assessing the effectiveness of field sanitation teams.

- Conducting routine monitoring and surveillance of all assigned and attached brigade units to ensure field sanitation procedures are implemented and to identify any existing or potential medical threats.

- Monitoring disposal practices/facilities for all classes of waste in the AO.

- Maintaining technical and tactical proficiency by participating in continuing medical education (CME) activities, and Army Training and Evaluation Program (ARTEP)/Common Task Test related training.

Additional information pertaining to PVNTMED staff and specific functions is discussed in FM 4-02.17.

3-6. Mental Health Section Operations and Functions

a. The MH section of the MSMC/DSMC/medical company heavy separate brigade/medical troop ACR is the medical element with primary responsibility for assisting units in the supported organizations to control combat stress. In the division/heavy separate brigade/ACR, combat stress is controlled through vigorous prevention, consultation, and restoration programs. These programs are designed to maximize the RTD rate of BF soldiers by identifying combat stress reactions and providing rest/restoration within or near their unit areas. Also, the prevention of posttraumatic stress disorders is an important objective in both division and corps CSOC programs. For detailed information on CSC operations, see FM 8-51.

b. The mental health section assigned to AOE MSMCs are staffed with a division psychiatrist (60W00), a social work officer (03, 73A67, MS), a clinical psychologist (03, 73B67, MS), three mental

health NCOs (91X40/30/20) and two mental health specialists (E4/E3, 91X10). The MH section of the Force XXI DSMC is staffed with a division psychiatrist (04, 60W00, MC) and a behavioral science NCO (E7, 91X40).

c. Under the direction of the senior MH officer, the MH sections of the MSMC/DSMC, medical company heavy separate brigade/medical troop ACR, and FSMCs provide MH/CSC services throughout the operational area. In the Force XXI division, each FSMC also has a MH section.

d. In maneuver brigades of AOE division, a brigade coordinator (behavioral science NCO) is routinely detailed to each FSMC commander to assist with COSC. This NCO works for the brigade surgeon under the general supervision of the division psychiatrist. The brigade CSC coordinator routinely circulates throughout the brigade to trained and advise supported personnel (see FM 8-51).

e. The ME section assigned to the Force XXI FSMC and the IBCT BSMC are staffed with a behavioral science officer (CPT, 67D00) and a mental health specialist (E4, 91X10).

(1) The mental health section has a primary responsibility for assisting commanders in controlling combat stress by implementing the brigade MH (combat mental fitness program). Also the MH section serves as a consultant to the commander, staff and others involved with providing prevention and intervention services to unit soldiers and their families.

(2) The MH section has the staff responsibilities for establishing brigade policy and guidance for the prevention, diagnosis, treatment, management, and return to duty of BF and other stress related casualties. This is accomplished under the guidance and in close coordination with the brigade surgeon, battalion surgeons, and BSMC physicians.

f. Functions of the Force XXI FSMC MH section and the IBCT BSMC MH section include—

- Conducting surveys and evaluating data to assess unit cohesion and other factors related to prediction and prevention of both BF casualties and misconduct stress behaviors.

- Identifying and resolve organizational behavioral and social environmental factors that interfere with combat readiness.

- Monitoring indicators of dysfunctional stress in units.

- Providing consultation and triage as requested for soldiers exhibiting signs of combat stress or neuropsychiatric disorders.

- Coordinating MH and stabilization support for soldiers and for their families from Army and civilian community support agencies.

- Providing counseling to soldiers experiencing emotional or social problems.

- Assisting in the evaluation of command referred emotionally and mentally impaired soldiers according to Department of Defense Directives 6490.1, Mental Health Evaluation of Members of the Armed Forces and 6490.5, Combat Stress Control Program.

- Conducting critical-event debriefing/diffusing following traumatic events within the IBCT.

- Coordinating and/or recommend/assist with getting commanders and staffs involved with unit and small group leader-led after action briefings.

- Providing stress management training to commander, leaders, and individuals for recognizing and coping with excessive stress to include leader's actions for resolving stress related problems and individual actions for coping with excessive stress.

- Providing CSC consultation services for unit commanders and feedback on the status of morale, unit cohesion, and adverse trends in their units. Provide recommendations for prevention or actions required to ensure positive mission-oriented motivation of unit members and unit cohesion.

- Conducting and overseeing a three-day unit restoration program for IBCT soldiers experiencing BF or other stress related disorders as required according to FM 8-51.

- Developing TSOPs and TTPs to facilitate the timely acquisition, treatment, disposition and or RTD of IBCT soldiers with BF or other stress related disorders.

- Ensuring patient encounters are recorded in the soldier's individual health record (HREC) and civilian employee medical records (CEMRs) in the field. The governing regulation is AR 40-66. Also see Appendix K.

- Providing predeployment briefings, postdeployment debriefings, and reunion briefings, for IBCT personnel and family support groups.

- Providing combat stress control training and consultation to IBCT medical personnel.

- Providing MH support in garrison for unit soldiers and families by working with unit commanders, chaplains, and other medical personnel or if the mission permits, to augment home station Community Mental Health Activity.

- Providing consultation, training, and support to the brigade's Alcohol and Drug Prevention and Control Program.

- Maintaining technical and tactical proficiency by participating in CME activities, and ARTEP/Common Task Test related training.

3-7. Optometry Section Operations and Functions

a. The optometry section is assigned to the MSMC, DSMC, and the medical company of separate brigades. It is normally staffed with two optometry officers (03, 67F), one of which serves as the section chief; an eye sergeant, 91W20; one optical laboratory specialist, 91H10; and one eye specialist, 91W10. The optometry section provides—

- Optometry services, including routine vision evaluation and refractions.
- Evaluation and management of ocular injuries and diseases.
- Spectacle frame assembly using presurfaced single-vision lenses.
- Spectacle repair services for units within the division.

b. The two optometrists assigned to this section independently conduct examinations of the eyes using optometric procedures, instruments, and pharmaceuticals, as required. They are responsible for—

- Performing eye examinations and prescribing corrective lenses.
- Managing ocular diseases and injuries according to medical protocols (established by the division surgeon/credentialing committee of the home station medical department activity (MEDDAC).
- Examining, evaluating, and referring laser-induced injuries for further ophthalmologic care as appropriate.
- Providing clinical statistical input through appropriate channel to the command surgeon as established by TSOP.
- Advising commanders on all matters relating to vision, to include protective eyewear (ballistic and laser protection).

SECTION II. TACTICAL EMPLOYMENT OF THE MEDICAL COMPANY

3-8. Employment of the Medical Company

The medical company locates with its parent headquarters in the DSA, BSA, or RSA. The medical company/troop participates in the initial reconnaissance of a new operational area. It assists with site selection for establishment of the units. The company/troop treatment teams may deploy, as required, to the geographical locations of supported units. The company/troop headquarters' element coordinates for convoy clearances and security for the movement of treatment teams through its parent support battalion/ squadron support operations section.

3-9. Site Selection

a. Site selection is an important factor impacting on the accomplishment of the unit's treatment mission. Improper site selection can result in inefficiency and possibly danger to unit personnel and patients. For example, if there is insufficient space available for ambulances to turnaround, congestion and traffic jams in the MTF AO can result; or, if the area selected does not have proper drainage, heavy rains may cause flooding in the unit and treatment areas. The optimal land space required for establishment of a medical company is approximately 2,500 square meters. This area also includes the helipad and parking area requirements. The actual space allotted to the unit will be based on METT-TC and the amount of operational space available to the support battalion/squadron.

b. Medical companies are normally established within a base cluster with other corps, division, brigade, or regimental units for security. Although the base cluster provides security, there are certain considerations which influence where within the base cluster the medical company/troop is established. The senior commander within a base cluster is also the base cluster commander and operates the base cluster operations center (BCOC). The medical company coordinates site selection and obtains approval from the BCOC prior to the establishment of the company area. The medical company will be competing with other CSS units for space and location within the base cluster. Many of the factors, which influence CHS operations, will also apply to the other CSS units. It is important, therefore, to stress the unique requirements of the medical mission. The BCOC provides guidance on security and briefs the medical company on base cluster operating procedures and locations of supported units and elements. Within the base cluster, the MTF should not be placed near hazardous materials (such as petroleum, oils, and lubricants (POL) and ammunition or storage areas), motor pools, and waste disposal sites. If possible, the MTF should be established toward the center, rather than on the perimeter of the base cluster.

c. Additional site selection criteria include—

(1) *Commander's plan and mission*. The specifics of the OPLAN, the manner in which it will be executed, and the unit's assigned mission can affect the selection of a specific site. The requirements for an area that is only to be used for a short period of time can differ significantly from an area that is expected to be used on an extended basis. For example, if the medical unit's mission requires that it relocate several times a day, complete treatment and holding areas will not be established; only essential services, shelters, and equipment will be used. On the other hand, if it is anticipated that the unit will be located at one site for an extended period of time, buildings or preestablished shelters, if available, may be used.

NOTE

Buildings of opportunity should be inspected by the engineers prior to use as an MTF.

(2) *Routes of evacuation and accessibility*. Ground evacuation is the principal means of evacuation for patients injured in the forward areas. The MTF must be situated so that it is accessible from a number of different directions and/or areas. It should be situated near and be accessible to main road

networks and air corridors, but not placed near lucrative targets of opportunity (such as bridgeheads). The site should not be so secluded that incoming ambulances have difficulty locating the MTF.

(3) *Expected areas of patient density*. To ensure the timely delivery of CHS, the clearing station must be located in the general vicinity of the supported forces (or Echelon I facilities supported). Without proximity to the areas of patient density, the evacuation routes will be unnecessarily long, resulting in delays in both treatment and evacuation. The longer the distance is that must be traveled, the longer it takes for the patient to reach the next echelon of care. Further, this time delay reduces the number of ambulances available for clearing the battlefield as a number of ambulances will be in transit to the clearing station at any given time.

(4) *Hardstand, drainage, obstacles, and space*.

- The site should provide good drainage during inclement weather. Care must be taken to ensure that the site selected is not in or near a dry river or stream bed, has drainage that slopes away from the MTF location and not through the operational area, and that there are not any areas where water can pool.

- The ground, in the selected area, should be of a hard composition that is not likely to become marshy or excessively muddy during inclement weather or temperature changes. This is particularly true in extreme cold weather operations where the ground is frozen at night and begins to thaw and become marshy during daylight hours. Further, the area must be able to withstand a heavy traffic flow of incoming and departing ambulances in various types of weather.

- The area selected should be free of major obstacles that will adversely impact on the unit layout (such as disrupting the traffic pattern), cause difficulties in erecting shelters (overly rocky soil), or require extensive preparation of the area before the MTF can be established.

- The space to establish the treatment and administrative areas of the unit is dependent upon the mission, expected duration of the operation, and whether NBC operations are anticipated. The site must be large enough to permit dispersal of the unit elements and expansion should augmentation be required. When fully establishing the site, at least 4 acres of land are required for the treatment and administrative areas exclusive of the helipad and motor pool requirements.

(5) *Communications*. When establishing communications, the selected site must enable communications while minimizing the enemy's ability to intercept and locate transmissions. See Appendix I for communications considerations and procedures.

(6) *Likely enemy targets*. The site must not be too closely located to likely enemy targets. These include—

- Ammunition storage facilities or ammunition transfer points.

- Petroleum, oils, and lubricants points.

- Motor pools.
- Main supply routes (MSRs) (must be accessible from but not directly next to).
- Bridges.
- River crossing points.
- Strategic towns and cities.
- Industrial complexes or factories.

(7) *Cover and concealment*. The area should provide maximum cover and concealment without hampering mission accomplishment or communications capability. Overhead cover is desirable for protection from biological and chemical contamination in the event of an attack.

(8) *Landing sites (zones)*. The site selected must have sufficient space available to serve as a landing site for incoming and outgoing air ambulances. Sufficient space must be allocated for establishing a landing site for contaminated aircraft downwind of the unit and treatment areas. Additional site selection considerations for a landing site are contained in FM 8-10-6.

(9) *Perimeter security*. The site selected should be easily defendable and maximize the use of available terrain features and defilade for cover and concealment. The extent of perimeter security requirements is dependent upon whether the unit is included in a base cluster (or its placement within the base cluster), or if it is solely responsible for its own security. A complete discussion on perimeter security and the Geneva Conventions is contained in Appendix A.

(10) *Flow of traffic (patients and vehicles)*. In establishing the traffic patterns within the unit area, three significant areas must be addressed.

- The selected site must permit the establishment of the treatment and administrative areas in such a manner as to maximize the smooth flow of patients through the triage, diagnostic, and holding areas. Using overlapping internal traffic patterns should be minimized.

- The external traffic pattern must afford a smooth flow of vehicle traffic through the unit area. There must be sufficient space allocated for ambulance turnaround once the patient has been delivered to the triage area. Intersections accommodating cross-traffic should be avoided as they present the potential for traffic jams and accidents. The flow of traffic should be in one direction only.

NOTE

Two-way traffic can cause confusion, particularly when loading and unloading patients.

- A route from the landing site to the triage area must be established which minimizes the distance the patient must be carried and which affords easy access to the treatment area.

(11) *Equipment*. Certain pieces of equipment require strategic placement within the company area. In selecting the site, the placement of this type of equipment must be considered. For example, trailer-mounted, 10 kilowatt generators must be placed in such a manner as to enhance their safe operation and to reduce their heat signature and noise level, yet be close enough to unit and treatment areas that the limited amount of cable can reach. It is preferable to maximize the use of natural terrain features within the site to provide a portion of this shielding rather than having to rely solely on the use of sandbags.

(12) *Decontamination area*. The site should be large enough to provide an area for patient decontamination. The specific site selected to establish the decontamination station must be downwind of the unit and treatment areas.

(13) *Geneva Conventions adherence*. The Geneva Conventions (Appendix A) afford the medical unit a certain degree of protection from attack. The extent to which the combatants and irregular forces on the battlefield are adhering to the provisions of the Geneva Conventions has a bearing on site selection in that it may dictate the degree of required security for the unit (refer to Appendix A).

This paragraph implements STANAG 2931.

3-10. Establishing the Company Headquarters

a. Operational Guidelines.

(1) The company headquarters must ensure that communications are established with the units within the support area. All security precautions and requirements must be met according to higher headquarters operating procedures. Only essential equipment is set up to support the medical company operations. If the failure to camouflage endangers or compromises tactical operations, the camouflage of the MTF may be ordered by a NATO commander of at least brigade level or equivalent. Dispersion of tents and equipment is accomplished to the maximum extent possible. A controlled entry into the medical company area is established.

(2) North Atlantic Treaty Organization STANAG 2931 provides for camouflage of the Geneva emblem and/or the red crescent on medical facilities where the lack of camouflage might compromise tactical operations. The STANAG defines “medical facilities” as medical units, medical vehicles, and medical aircraft on the ground. Medical aircraft in the air must display the distinctive Geneva emblem. Camouflage of the red cross means covering it up or taking it down. The black cross on an olive background is not a recognized emblem of the Geneva Conventions. The command element supervises the establishment of the company. The commander monitors all elements as the company sets up. He ensures that it is established according to the unit layout plan and the TSOP. The field medical assistant/XO and the 1SG assist the company commander. The field medical assistant/XO supervises and monitors the establishment of the company area for compliance with its parent battalion/squadron TSOP and its higher

headquarters' guidance. The field medical assistant/XO coordinates with supporting units/elements for short- and long-term support requirements. Both the commander and field medical assistant/XO should interface with supported units as soon as possible. This interface includes—

- Combat health support requirements (displacement of ambulance and treatment teams to remote sites in support of units within the company's AO).
- Sick call services.
- Medical evacuation support and procedures.
- Dental sick call.
- Mass casualty plan.
- Nuclear, biological, and chemical patient decontamination support.
- Preventive medicine.
- Combat stress control.
- Medical threat.
- Return-to-duty policies/procedures.
- Class VIII resupply.

b. Area Damage Control.

(1) When NBC patient decontamination support is required, the supported units are responsible for providing eight nonmedical personnel to perform patient decontamination (under medical supervision). This is accomplished according to FMs 3-5, 8-10-7, and 8-285. The nonmedical personnel are identified and trained on patient decontamination procedures with medical company personnel. Additional personnel from the base cluster may be trained to transport patients by litter. All Echelon II medical companies are authorized three chemical patient treatments and two patient decontamination MESs. Each patient chemical treatment MES is stocked with enough supplies to treat 30 patients. Each patient decontamination MES is stocked with enough supplies to decontaminate 60 patients.

(2) The 1SG focuses his attention toward ensuring all unit security requirements are accomplished. The 1SG supervises the establishment of the company headquarters and the troop billeting areas and monitors field sanitation team activities. The operations element assists in establishing the company headquarters. The NBC NCO supervises the company NBC team (detailed company members) by monitoring its activities and use of unit NBC-monitoring equipment. He coordinates with the BCOC and monitors the placement of early warning devices for the detection of chemical agents. He supervises and monitors unit personnel for compliance with correct wear of mission-oriented protective posture (MOPP)

clothing and equipment according to the current MOPP level and TSOP. The NBC NCO coordinates with veterinary services in cases of possible NBC contamination of food.

(3) Unit communications personnel set up communications equipment and establish the NCS for the company. They establish contact with the battalion/squadron headquarters and with supporting and supported units. They establish the medical company net control for unit assets. Communications personnel establish the internal wire communications net. They connect to the mobile subscriber equipment (MSE) area system at the wire subscriber access point operated by the area support signal element.

(4) The supply element establishes both the unit and medical supply area. It ensures that all supplies are secured, properly stored, and protected from the environment. It establishes the unit POL and water points. The supply element supports the company during establishment and provides additional items such as sandbags, tent pegs, and other standard equipment normally associated with establishing the company/troop.

c. *Rear Operations*.

(1) Rear operations are actions, including area damage control, taken by units, singly or in a concerted effort, to secure and sustain the force, neutralize or defeat enemy operations in the rear area, and ensure freedom of action in deep and close operations.

(2) Medical units are established within base clusters to afford them the protection offered by the other combat, CS, and CSS forces. Medical units are limited by the provisions of the Geneva Conventions in responding defensively to enemy action. (Refer to Appendix A for additional information on self-defense and the defense of patients.)

d. *Mass Casualty Situations*. Medical units must be prepared to respond to MASCAL situations (see Appendix C) that may arise in the rear area. Thorough planning, effective communications, and training and rehearsal of these types of operations are required if they are to be successfully executed.

3-11. Command Post Operations

The company CP is the principal facility employed by the medical company/troop commander to C2 unit CHS operations. It is typically staffed with the commander, XO (health services administration assistant/ medical operations officer), 1SG, and other individuals the commander designates (depending on the operation), such as the NBC specialist, and the forward signal specialist.

a. The commander establishes priorities and defines the level of authority within the CP. The extent of operational authority given to members of the CP staff is based on the commander's desires and the staffs' experience. The exact operational authority is defined in the TSOP. The commander also establishes procedures (see TSOP, Appendix G), which clearly identify those CP activities and functions that must be accomplished on a routine basis to support the operation and those that require command approval. In all situations, the commander will be kept informed.

b. During the course of support operations, the CP receives, analyzes, coordinates, and disseminates information, which is critical to successfully accomplish the mission. The tools used in the CP to facilitate C2 are a journal, a situation map, and an informational display.

(1) *Journal*. A journal is an official chronological record of events about a unit or a staff section during a given period of time. A journal is prepared and maintained during combat, training exercises, other military operations (such as disaster relief or humanitarian assistance operations) and as directed by the commander. The journal is maintained on Department of the Army (DA) Form 1594 (refer to FM 101-5 for additional information and sample journal entries).

(2) *Situation map*. A situation map is a graphic presentation of the current organizational situation. A general situation map may be supplemented with one or more overlays showing specific items (such as barricades or obstacles). At the company level, one situation map may be used; however, specific functional areas may maintain their own specific situation map (such as medical evacuation with preplanned CCPs, AXPs, and forward-sited ambulance assets). Situation maps should be updated per the TSOP with information obtained from higher headquarters and changes in the tactical situation. Situation maps, as a minimum, show—

- Symbols as required to portray the friendly and enemy situation (refer to FM 101-5-1 for information on guidance on the use of symbols).
- Boundaries and frontline trace applicable to the current operations.
- Other control measures applicable to the operation (such as phase lines).
- Location of CPs for adjacent units, supported units, and higher headquarters.
- Location of supported units.
- Civilian installations, allied military installations, airfields, seaports, and rail networks, as appropriate.

(3) *Information display*. An information display, automated or manual, may be required to supplement details contained on the situation map or to make information available that is not suitable for posting on the situation map. Information associated with the situation map is located adjacent to it for easy viewing and posting. A typical display is in the form of a chart which reflects information such as task organization, personnel status, supplies and equipment status, organization and strengths (personnel, equipment, and health status) of the unit, and communications status. An information display should follow these guidelines:

- The commander determines which information will be displayed.
- The display readily must show the essential information.
- The display must permit prompt changes.

NOTE

A display that is not up to date is misleading and serves no useful purpose.

c. The CP must be staffed and equipped for 24-hour operations.

3-12. Employment of the Treatment Platoon

a. The treatment platoon establishes its elements in accordance with the unit's TSOP. Platoon personnel set up patient treatment and holding areas. Some platoon personnel are detailed, as necessary, to assist with unit security and other unit activities associated with establishing and conducting company operations. Treatment section personnel assist the platoon with establishing the clearing section and preparing for further deployment of treatment teams according to the OPORDs/OPLANs. The platoon headquarters element supervises the establishing of platoon operations. The platoon leader directs setup operations and supervises the displacement of treatment squads/teams, when necessary. The treatment platoon field medical assistant assists the platoon leader in supervising establishment operations and coordinates the displacement of treatment squads/teams with company headquarters and supported units. He ensures all platoon elements perform PMCS on their assigned equipment and report any deficiencies that are not correctable to the platoon leader, who reports them to the company commander. The treatment platoon sergeant is responsible for assisting the platoon leader and field medical assistant with establishing platoon operations. He ensures that the platoon treatment elements are established according to the TSOP. He supports the 1SG by providing platoon personnel to assist with security establishment and other operational activities of the company/troop headquarters.

b. The area support section establishes all treatment areas as directed by the treatment platoon leader. A treatment team from the treatment section is tasked with providing medical support for the company until the clearing station is established. The area support section is also tasked with clearing and marking helicopter landing areas and the ambulance turnaround point.

3-13. Establishing the Clearing Station/Medical Treatment Facility

a. The term *clearing station* is the generic term used in designating an Echelon II MTF in the BSA/RSA, DSA, corps, and EAC and in support of the separate brigades and ACRs. The medical company/troop treatment platoon's area support section or an area treatment squad operates the MTF. In the DSA, ACR RSA, IBCT BSA, and in the separate (corps) BSA, it is collocated with the MH, optometry, and PVNTMED sections, the FST, and the Medical Detachment, Telemedicine (MDT) when attached. The division/brigade clearing station provide Echelons II medical care. All medical companies have the capability to providing both Echelon I and Echelon II care. The DSA clearing station/MTF also serves as the backup for the BSA clearing station/MTF. The clearing station/MTF, established by the medical company/troop of the separate brigade/ACR provides Echelons I and II medical care to all units operating in its support AO. The clearing station established by the ASMC in corps and EAC provides Echelons I and II medical care on an area basis for units within its AO (refer to FM 4-02.24).

b. When establishing the MTF, sufficient space must be allocated to accommodate the normal clinical elements of a medical company/troop, as depicted in Figure 3-1, with a possible augmentation of other supporting elements. This augmentation may include a FST (augmented or organic), a MH section, a PVNTMED section, and other medical specialty teams or elements that may be METT-TC driven. Some of the elements depicted in this layout such as the MH, PVNTMED, and optometry sections are not applicable to all medical companies (refer to Chapter 2 for discussions on the organizational structure of medical companies).

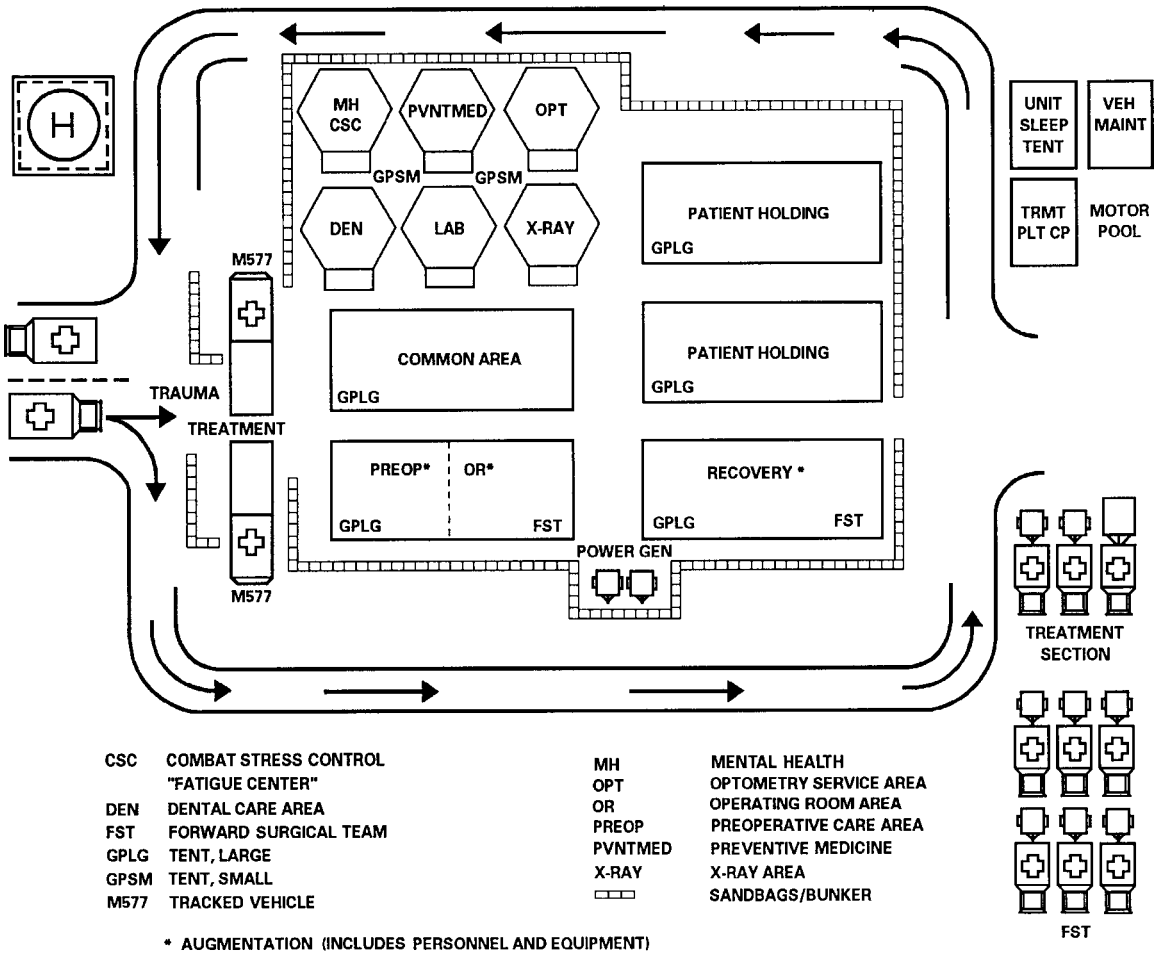

Figure 3-1. Suggested layout of a clearing station augmentation.

c. The clearing station is established according to the unit layout and the company TSOP. Attached corps medical units normally establish in the vicinity of the clearing station. The clearing station maintains its integrity at all times. The area support squad establishes its patient treatment areas according to the layout and the TSOP and provides treatment (see Appendix H). The dental treatment facility is established adjacent to the clearing station. The dental officer supervises the placement of dental supplies and equipment within the dental treatment area. The laboratory element is normally established within the clearing station area. Precautions for operating radiological equipment must be observed. Radiation hazard areas adjacent to the radiology facility must be clearly marked and blocked so company personnel are prevented from crossing. The patient-holding squad sets up the patient-holding area. The patient-holding area is normally adjacent to the clearing station. The treatment platoon leader, based on the commander's guidance, troop concentration, and casualty estimates, determines the number of cots set up. If the commander directs that only 20 cots are to be set up, this may dictate that only one general-purpose large tent be erected. In the vicinity near a patient-holding area, a water point, a latrine, and a handwashing area should be established for the convenience of those patients being held at this facility. Field surgeons direct the activities of the treatment squads. They identify the treatment team tasked with providing medical support for the company/troop during movement and establishment of operational procedures. Personnel assigned to the area support section are involved in assisting with establishment of the medical platoon area and/or preparing for redeployment when required.

d. Seriously ill or wounded patients arriving at the BSA/RSA clearing station are provided medical treatment, initial surgery, if or preparing for redeployment, when required, and stabilized for further evacuation. Patients reporting with minor injuries, BF, and illnesses are treated within the capability of attending medical personnel. These types of patients are either held for continued treatment for up to 72 hours; or evacuated to the supporting MTF for further treatment, evaluation, and disposition. Other functions of this MTF include—

- Providing consultation and limited clinical laboratory and radiology diagnostic procedures.

- Recording all patients seen or treated at the MTF.

- Verifying the information contained on the US Field Medical Card (FMC) of all patients evacuated to the facility.

- Monitoring casualties, when necessary, for NBC contamination prior to medical treatment.

- Ensuring decontamination of NBC-contaminated patients is accomplished.

NOTE

Patient decontamination is performed by eight nonmedical personnel designated by the echelon commander and supervised by medical personnel. (For additional information, refer to FM 8-10-7.)

e. Evacuation from the clearing station is performed by ground and air ambulances from the corps medical evacuation (MEDEVAC) battalion. If a brigade/regiment is operating out of sector, patients may require evacuation by USAF assets from its BSA/RSA.

f. Ammunition and individual weapons, to include sensitive military equipment (electronic devices and so forth) belonging to patients to be evacuated further to the rear, are collected and safeguarded by the clearing station personnel and returned to the S4 of the supported unit or as directed by the TSOP. Patients who are being held at the holding facility but expected to RTD within 72 hours may retain their weapons and other equipment, or such equipment can be given to the unit armorer for safekeeping pending the patient's final disposition. Patients traveling to the rear for routine medical consultation will retain their individual weapons and equipment, as they will RTD from the rear supporting facility.

g. For a detailed discussion on the operation of a clearing station on an urbanized terrain, see Appendix J.

3-14. Employment of the Ambulance Platoon

Ambulance platoon operations are an essential link in clearing the battlefield of the wounded, thus enabling the tactical commander to exercise control over the tactical situation.

a. The ambulance platoon locates with the treatment platoon for mutual support. The platoon is fully mobile in that all of its assets may be totally dispatched at any given time. Each ambulance team carries an on-board MES designed for medical emergencies and en route patient care. Ambulances are normally pre-positioned with supported units. Ambulances may be dispatched from the BSA to units positioned in or near the BSA that are receiving area medical support from the FSMC. The ambulance platoon leader and platoon sergeant conduct reconnaissance of the area supported to establish primary and alternate evacuations routes, to verify locations of supported units, and to field site ambulance teams as necessary.

b. The platoon leader and platoon sergeant coordinate support requirements with supported units for ambulance platoons placed in DS. Ambulance platoon personnel obtain appropriate dispatch and road clearances prior to departing company/troop or supported unit areas. He ensures that maps and overlays are provided to platoon personnel. If time and fuel permit, the platoon leader or platoon sergeant may take ambulance drivers on a rehearsal of the evacuation routes. The platoon leader/sergeant coordinates/ establishes AXPs as required by the medical evacuation mission.

c. The DS tracked ambulances are usually positioned forward with the BASs of the maneuver battalions. Tracked ambulances normally evacuate patients from aid station back to AXPs where patients are placed in a wheeled or air ambulance for further evacuation to the clearing. Wheeled ambulances are used as GS for area support missions and for medical evacuation missions where patients do not require the added protection that an armored ambulance provides. Ambulance platoon personnel assist with establishment of the medical company/troop and provide available personnel as tasked by the 1SG. For definitive information on medical evacuation operations, see FM 8-10-6 and FM 8-10-26.

d. Administratively, it is important that ambulance drivers are well briefed on the tactical situation in the area in which they will be providing medical evacuation support. A thorough route reconnaissance must be accomplished and strip maps developed before ambulance crews begin medical evacuation operations. During the planning process and continuously once the operation has begun, the ambulance platoon leader and the medical company/troop commander must prepare casualty estimates for the tactical operation to ensure there is sufficient CHS coverage for the operation. The medical evacuation plan should include an overlay depicting (at a minimum) the location of supported units, CCPs, Echelon I facilities, and AXPs. The platoon leader should also obtain both the CSS and operations overlays for the tactical operation. These overlays provide valuable information, such as the location of mine fields, obstacles and barriers, artillery target reference points, and air corridors. This information is essential to enhance the survivability of the ambulance crews by decreasing incidents of fratricide and enhancing mobility of the evacuation assets. The ambulance platoon leader and platoon sergeant must be proficient at map reading, terrain analysis, communications, and reading operational graphics (FM 101-5-1) in order to successfully accomplish the medical evacuation mission. The ambulance platoon leader establishes his location so that he can best control the medical evacuation operation. His location will vary with each tactical operation and can include—

- Combat trains.
- Casualty collection points.
- Ambulance exchange points.
- Relay points or other locations along the ambulance shuttle system.
- Medical company/troop area.
- Central location behind supported units.

e. One of the keys to successfully accomplishing the medical evacuation mission is communications and control. It is essential that communications be effective and maintained between the supported units, the ambulance assets, the ambulance platoon leadership, and the supporting corps evacuation elements. This can be accomplished in a number of ways. Division ambulances are equipped with radios (also, IBCT and Force XXI ambulances are equipped with FBCB2 enablers—see Appendix F) that can be used to pass MEDEVAC request information and instructions. Supporting corps ambulances, however, may not be radio-equipped. Medical evacuation information must, therefore, be passed through medical channels by returning ambulances crews, and information is then relayed back through ambulance crews returning to the forward areas. The ambulance platoon TSOP must also include procedures concerning how to conduct evacuation operations during periods of radio silence. In order for the ambulance platoon leader to ensure his assets are being efficiently employed, he must stay abreast of the tactical situation, the tempo of the battle, and the areas of patient density.

f. There are a number of employment options available to the medical commander to ensure there is timely and efficient medical evacuation coverage for the units supported and that contact is maintained with these units.

(1) *Forward siting of ambulance assets*. The medical company/troop ambulances can be forward sited with Echelon I facilities. This provides immediate and responsive support to that facility.

(2) *Use of the ambulance shuttle system*. The ambulance shuttle system is an effective and flexible method of employing ambulances during combat. It consists of one or more ambulance loading points, relay points, and when necessary, ambulance control points, all echeloned forward from the principal group of ambulances, the company location, or basic relay points as tactically required. The various points within the ambulance shuttle may or may not be manned. If they are staffed, the echelon of care designating the point is responsible for providing that support. A detailed discussion of the employment of the ambulance shuttle system and its various components is contained in FM 8-10-6.

(3) *Casualty collection points*. In intense combat operations, CCPs are established along routes where it is anticipated that wounded soldiers traveling to the rear would naturally follow (lines of patient drift). These points can be established in areas where terrain canalizes traffic or locations near or adjacent to improved roads. In addition to ambulance assets, treatment assets may also be collocated. These points may or may not be staffed with EMT and medical evacuation personnel. As with the ambulance shuttle system, the echelon of care designating the point is responsible for its staffing.

(4) *Ambulance exchange points*. Ambulance exchange points should be located where they can best provide the required support to reduce ambulance turnaround time to supported units. Ambulance exchange points are a place on the ground where a patient is transferred from one evacuation platform to another (such as litter to vehicle; tracked vehicle to wheeled vehicle; ground vehicle to air ambulance) en route to an MTF. Their use is extremely important when a tracked vehicle is evacuating patients. As tracked vehicles are slower than wheeled vehicles, AXPs should be established as close as possible to the supported units to reduce the time and distance requirements for the tracked vehicles. The AXP may be an established point in an ambulance shuttle or it may be designated independently.

(*a*) These points may be staffed or unstaffed. Points, which are not staffed, may serve as rendezvous points for the rapid transfer of a patient from one transportation mode to another. In most cases, these points will not be staffed. An AXP is a predetermined point, which may be activated by such events as the passing of phase lines and/or for specific time periods. Ambulance exchange points are moved frequently to reduce their signature and enhance the survivability of the ambulance assets.

(*b*) An AXP may serve three battalions/squadrons (FSMC/medical troop); three brigades (reinforcing mission) (MSMC/DSMC); or a specific number of nondivisional Echelon I facilities (ASMC); therefore, if possible, the AXP should be centrally located to reduce ambulance turnaround and enhance the timely execution of the medical evacuation mission. This may not, however, always be possible due to terrain or other factors. The distance from the supported Echelon I facilities is also dependent upon the terrain, the tactical situation, the type of vehicles being operated (wheeled versus tracked), and the type of operation being conducted (offense, defense, or retrograde). Additionally, the medical company/troop has an area support mission within the BSA/RSA, DSA, or corps area. All ambulance assets cannot be forward sited to units in contact, as sufficient assets must remain in the support area to accomplish the area support mission.

3-15. Divisional and Nondivisional Medical Supply Offices

This section is applicable to the DMSO of AOE MSMCs and Force XXI DSMCs. It is also applicable to the medical company of separate brigades and the medical troop of ACRs.

a. The DMSO, the BMSO, and the RMSO are staffed with the following personnel:

- One health service materiel officer (02, 70K67, MS), chief of section.
- One MEDLOG sergeant (E7, 91J40, NC); noncommissioned officer in charge (NCOIC) (E6, 91J30 in BMSO and RMSO).
- One pharmacy NCO (E6, 91Q30, NCO).
- One MEDLOG sergeant (E5, 91J30, NC) (assigned MSMCs only).
- One medical equipment repairer (E4, 91A10).
- Two MEDLOG specialists (E4, 91J10) (one assigned BMSC and RMSO).
- One MEDLOG specialist (E3, 91J10).

b. The medical supply office is organized to provide Class VIII supply and unit-level medical equipment maintenance for the division/separate brigades/ACR and attached medical units. It executes the division/brigade/regimental CHL plan.

c. The mission of this element is to provide routine and emergency Class VIII resupply, to include blood (packed red blood cells) support for Echelon II. Personnel of this section plan, coordinate, and manage a variety of functional areas pertaining to technical materiel, equipment, and services used in support of the CHL support mission. For definitive information on DMSO employment and operations, see FMs 8-10-9 and 4-02.1.

3-16. Employment of the Preventive Medicine Section

a. Preventive medicine activities begin prior to deployment to minimize DNBIs. Actions taken include—

- Ensuring command awareness of potential medical threats and implementation of appropriate protective measures.
- Ensuring the deployment of a healthy and fit force.
- Monitoring the command's immunization status (see AR 40-562).

- Monitoring the status of individual and small unit PVNTMED measures (see FMs 21-10 and 21-10-1).

- Monitoring PVNTMED measures against heat and cold injuries and food-, water-, and arthropodborne diseases (see FMs 4-02.33 and 8-250, Technical Manual [TM] 5-632, Technical Bulletins [Medical] [TB MED] 81, 507, 530, and 577).

- Performing environmental sampling and/or analysis on air, water, and soil to assess for any health-related impact.

- Ensuring training in PVNTMED measures that will assist in countering the medical threat.

- Monitoring the use of prophylaxis such as antimalarial tablets.

- Ensuring adequate unit field sanitation team personnel and supplies.

- Monitoring, collecting, analyzing and recording medical surveillance data.

b. The division PVNTMED officer, medical company/troop commander, and PVNTMED personnel must be proactive and initiate action on presumptive information to reduce the medical threat early. They cannot wait until the incapacitation of troops occurs before taking action; for example—

- If mosquitoborne diseases are endemic to troop assembly areas and known or suspected vectors are present, mosquito control efforts should be initiated.

- Inadequate sanitation practices must be corrected before the first case of enteric disease appears.

- Avoid establishment of bivouac locations on sites that are contaminated with toxic industrial chemicals.

c. It should be anticipated—

- That sanitation breakdowns will occur while troops are still in debarkation assembly areas.

- That soldiers are at risk for arthropod-transmitted diseases upon entry to the AO.

- That a lack of or delay in implementing preemptive actions can significantly impact on the forces ability to accomplish their assigned mission. Refer to FMs 8-250, 21-10, and 21-10-1 for additional information.

3-17. Employment of the Mental Health Section

a. The MSMC/DSMC commander prioritizes the MH mission based on input from the division psychiatrist and on the provisions of the division CHS plan. The division psychiatrist is assigned to the MSMC/DSMC. The psychiatrist is also a working physician who applies the knowledge and principles of psychiatry and medicine in the treatment of all patients. He examines, diagnoses, and treats, or recommends courses of treatment, for personnel suffering from emotional or mental illness, situational maladjustment, combat stress reaction, BF, and misconduct stress behaviors.

b. Personnel assigned to the MH section assist the division psychiatrist with the accomplishment of his duties. They may perform as CSC coordinators for selected units in the division rear. Mental health personnel will also assist with and provide COSC training to—

- Small-unit leaders.
- Unit ministry teams and staff chaplains.
- Battalion medical platoons.
- Patient-holding squad and treatment squad personnel of medical companies.

3-18. Employment of the Optometry Section

The optometry section normally establishes its operations in the clearing station. Patients seen by this section are normally referred from units and MTFs within the supported area. The optometry sections can form two teams with the capability of projecting services into areas of large troop concentrations. All eyewear fabrications or repairs beyond the scope of the section's capability are sent to the supporting MEDLOG battalion.

CHAPTER 4

COMBAT HEALTH SUPPORT IN SPECIFIC ENVIRONMENTS

4-1. Introduction

a. Combat health support is limited when operating in areas of adverse environmental conditions or terrain hazards. In these environments, medical units may require special purpose equipment, which is not normally included in their TOE, or additional quantities of authorized equipment. This equipment can include, but is not limited to, such items as—

- Mountain climbing gear.
- Cold weather bags for the protection of patients.
- Extra tentage.
- Modified transportation platforms.
- Bed nets.

b. Of equal importance, special handling techniques, increased maintenance, and protection from the environmental hazards may be required for personnel, supplies, and equipment.

c. This chapter discusses CHS operations, including ground ambulance operations; in specific operations; only slight reference is made to air ambulance operations. For an in-depth discussion of air and ground ambulance operations in these environments, refer to FMs 8-10-6 and 8-10-26.

4-2. Jungle Environment

a. Difficult terrain, widely dispersed combat units, inadequate road networks, and unsecured lines of communications (LOCs) all have a direct effect on CHS in jungle operations. The jungle environment degrades the ability to maneuver. The manner in which CHS is provided in this environment depends on how the tactical units are employed. Wide variations may be expected, but the general principles of providing CHS apply.

b. Jungle combat operations are characterized by ambushes and other guerrilla-type operations. The security threat caused by infiltrators requires that LOCs be patrolled often and that convoys be escorted. It is, therefore, essential that CHS be performed as far forward as the tactical situation permits. Deploying assets forward—

- Improves response time.
- Reduces road movement.
- Allows the CHS elements to take advantage of the security offered by combat units.

c. Special planning considerations for operations in the jungle environment include the following:

• *Evacuation*. Thick and remote jungles often require that evacuation be accomplished by litter. In the jungle, even slightly wounded soldiers may find it impossible to walk through the dense undergrowth. This requires that they be evacuated on a litter until easier terrain is reached. This, in effect, raises the number of patients who require evacuation by litter. Litter evacuation is a labor-intensive activity that quickly exhausts the litter bearers. At best, litter teams can carry patients only a few hundred yards over rough terrain before becoming exhausted and requiring rest or relief. Litter carries should be kept as short as possible and maximum use of air ambulances equipped with rescue hoists and jungle penetrators should be made.

• *Water*. Water is vital in the jungle; it is also plentiful. Water from natural sources, however, should be considered contaminated. Water purification procedures must be taught to all soldiers. The high humidity and heat present in the jungle environment requires all leaders to ensure that a water discipline program is established and enforced. The consumption of inadequate amounts of water will lead to dehydration and heat injuries. The human body cannot adjust to less water; hydration must be continuous.

• *Clothing and personal protective equipment and supplies*. Because of the tropical climate, units should pack hot weather clothing when deploying to jungle areas. Jungle fatigues and boots are recommended. The bed net, insect (arthropod) repellent, and sunscreen must be issued to all soldiers operating in this environment.

• *Disease and nonbattle injuries*. The jungle environment is ideal for the transmission of large numbers of diseases. The rate of DNBI casualties is potentially the highest in this climate. The heat, humidity, and terrain places the troops at a high risk for dehydration, heat injury, skin diseases, endemic diseases, and immersion syndrome. Cold injury and especially hypothermia are a risk in cool (night) times because wet, hot weather clothing loses its insulating value. Small wounds can rapidly become infected and lead to the loss of effectiveness and possibly require medical evacuation. High standards of personal hygiene must be taught, encouraged, and maintained by the command. Mosquitoes and other arthropods that carry disease flourish under jungle conditions. Use of all PVNTMED measures must be ensured. Poisonous plants, animals, arthropods, large predators, and reptiles can cause casualties. Foodborne and waterborne diseases leading to diarrhea or other symptoms abound. Food service sanitation measures must be strictly followed. For additional information on PVNTMED measures, refer to FMs 4-02.17, 4-02.21, 21-10, and 21-10-1.

• *Combat Operation Control*. The jungle restricts vision and hearing, causes discomfort and poor hygiene, and evokes a sense of threat from poisonous plants, animals, reptiles, enemy ambush, and fear of becoming lost. Battle fatigue rates are high until troops gain jungle fighting and survival skills. For an in-depth discussion on COSC, refer to FMs 8-51 and 22-51.

• *Training*. Medical Personnel deployed to a jungle environment should be trained in survival and support techniques. Training (both initial and sustainment) should be conducted on—

- Hot weather acclimatization and survival.

- Prevention, early detection, and treatment of arthropodborne, foodborne, and waterborne diseases.
- Land navigation.
- Field sanitation and other PVNTMED measures.
- Care and maintenance of equipment and supplies.
- Local plants, animals, reptiles, and arthropods that pose a medical threat.

- *Equipment and supplies*. Due to the increased heat and humidity, vehicles and equipment require additional maintenance. Equipment tends to rust quickly and must be cleaned and oiled more frequently. Canvas items rot, and rubber deteriorates much faster than in more temperate climates. Class VIII supplies (to include blood) are both environmental and time sensitive. These supplies must be correctly stored at the appropriate temperature and used before their expiration date. Improper storage and handling result in these supplies becoming unusable.

d. For additional information on medical evacuation jungle operations, refer to FMs 8-10-6, and 90-5.

4-3. Mountain Environment

a. In the past, armies have experienced great difficulty in evacuating patients from mountainous areas. Mountain environments are extremely diverse in nature. Some mountains are dry and barren with temperatures ranging from extreme heat in the summer to extreme cold in the winter. In tropical regions, mountains are frequently covered by lush jungles and heavy seasonal rains may occur. Many areas display high rocky crags with glaciated peaks and year-round snow cover. Elevations can also vary from as little as 1,000 feet above sea level to over 16,000 feet above sea level with drastic and rapidly occurring weather changes.

b. In order to effectively support the tactical plan, the CHS plan must provide maximum flexibility. The CHS planner should consider using all methods of evacuation. Because of the rough terrain, the medical companies may not be able to reach the BASs by ground ambulance. An ambulance shuttle system established with an AXP for aeromedical evacuation assets to meet litter bearers may be required. Litter bearers and beasts of burden, however, may be the only means of evacuation. The tactical commander determines which soldiers will serve as litter bearers. Close coordination between the medical companies and BASs in establishing CCPs and AXPs is necessary to—

- Reduce distance traveled by litter bearers.
- Reduce evacuation time.
- Conserve personnel.

c. Mountain operations require CHS personnel to carry additional equipment. Items such as ropes, pitons, piton hammers, and snap links are all necessary for evacuation of patients and the establishment of MTFs. Unnecessary equipment (especially that which is heavy or bulky [for example, extra tentage], or that for which substitutes are available) should be left behind. If stored, this equipment and supplies should be readily available for airdrop or other means of transport.

d. Survival training is essential in this environment. Combat health support personnel should be trained in survival skills encompassing the following areas:

- Traversing mountainous terrain, to include mountain (rock) climbing and the use of ropes and vertical rescue techniques.
- Exposure to extreme cold and snow, to include cold injury prevention.
- Land navigation.
- Preparation of field expedient shelters.
- Individual and unit movement at high altitudes.
- Care and treatment of patients suffering from high altitude illness and cold weather injuries.

e. Combat health support personnel will see an increase in patients suffering from—

- Fractures, sprains, and dislocation injuries.
- Acute mountain sickness, high-altitude pulmonary edema, and cerebral edema caused by the rapid ascent to heights over 7,500 feet above sea level.
- Cold weather injuries and hypothermia.
- Dehydration and heat exhaustion.
- Sunburns and snow blindness.
- Aggravated sickle cell anemia. (Although not considered a mountain illness, personnel with sickle cell traits can be seriously affected by the decrease in the barometric pressure and lower oxygen levels found at higher altitudes.)
- Operational stress. Mountains confer a psychological advantage to those who hold the high ground, with good fields of vision and fire. Those who are confined to the valleys or roads or who must struggle up hill against snipers or indirect fire tend to have higher COSC rates. (Refer to FM 8-51 for additional information.)

f. For additional information on mountain operations, refer to FM 3-97.6. For additional information and techniques for the extraction and evacuation of personnel deployed in mountain terrain, refer to FM 8-10-6.

4-4. Desert Environment

a. Deserts are arid, barren regions of the earth incapable of supporting normal life because of the lack of fresh water. Although deserts are often thought of as hot climates, it is important to note that temperatures range from over 136 degrees Fahrenheit (F) in some deserts to bitter cold in others. Day-to-night fluctuations in temperature can exceed 70°F. Desert terrain can have mountains, rocky plateaus, or sandy dunes; some desert areas may contain all of these characteristics. Rain, when it falls, often causes flooding in low-lying areas. Winds can have a devastating effect upon CHS operations by destroying equipment and supplies and causing dust storms. Dust storms make navigation, patient acquisition and evacuation, and treatment difficult. Since deserts vary considerably in their type of terrain and temperature, characteristics, current and specific medical intelligence should be obtained prior to deploying to a desert environment.

b. The CHS planner must consider the numerous environmental effects to personnel, equipment, and supplies when developing the CHS plan for this environment. These factors include, but are not limited to the following:

(1) *Acclimatization*. To be effective, soldiers must be properly acclimatized to the desert. Two weeks are usually required to satisfactorily acclimatize troops to a hot environment, using progressive degrees of heat exposure and physical exertion. Other potential acclimatization problems that may be encountered are the effects of dry air and altitude on the respiratory system. Since many desert areas are located in mountainous terrain, soldiers may have to be acclimatized to both altitude and cold.

(2) *Discipline*. Units deployed in desert areas typically have long LOCs and are widely dispersed. This necessitates a greater reliance on the junior leaders since commanders are required to decentralize operations. For a unit to be effective, a high level of discipline must exist at all levels of the organization.

(3) *Water*. Water is the most basic need in a desert. Without it, soldiers cannot function effectively for more than a few hours. See FM 21-10 for water requirements. Extra water must be carried by medical vehicles and be available in MTFs. The additional quantities of water are required for patient consumption, treatment of heat casualties, and routine operation of the MTF.

(4) *Endemic disease and environmental injuries*. Soldiers deployed in the desert are susceptible to endemic and epidemic diseases and environmental injuries. Water discipline, immunizations, pretreatments, barrier creams, and chemo-prophylaxis, field sanitation, personal hygiene, and other PVNTMED measures can reduce the risk of DNBIs. Proper clothing, equipment, and a water discipline program to protect against environmental injuries must have command emphasis.

(5) *Combat Operational Stress Control*. The desolate, often wide-open spaces of many deserts can cause uneasiness, disorientation, and fear of being observed or of becoming lost. These

circumstances may result in high COSC rates until troops learn to navigate, move, camouflage, and use other survival skills in this environment.

(6) *Winds, dust, and sand*. Winds may very easily damage equipment and supplies. Equipment is protected by using covers, tie-downs, and shelters. Terrain helps shield equipment from the wind if the site selection is done carefully. In some cases, special tools (such as extra long metal tent stakes) are necessary. Supplies must be carefully stored and protected from the effects of the wind and sand. The effects of wind and sand are interrelated. Desert sand starts to become airborne when the wind reaches about 20 knots. Sandstorms—

- Restrict visibility.
- Pose a hazard to eyes (especially for soldiers wearing contact lenses).
- Contaminate water supplies (if they are not protected).
- Make navigation and patient evacuation difficult.

Dust and sand presents one of the greatest dangers to the proper functioning of equipment. Sand mixed with lubricants forms an abrasive paste. Lubricated fittings, bearings, and filters should be inspected frequently and changed when required. Communications and automation equipment may be adversely affected by dust and sand. Over a period of time, electrical insulation is damaged by windblown sand. Special care should be taken to brush dust and sand off radio equipment, computers, and printers, and to keep ventilating ports and channels clear. Dust trails created by hovering aircraft or ground vehicles can be seen in excess of 10 miles on a relatively flat desert. This exposes these assets to direct and indirect enemy fires. If the tactical situation permits, ground vehicles should reduce their speed to the point that they do not create a dust signature.

(7) *Terrain*. Trafficability varies with the type of terrain covered. Open, flat, and rocky terrain affords higher trafficability than does mountainous areas, lava beds, or salt marshes. Drivers must be well trained in judging the terrain over which they are driving to select the best route. Track vehicles are best suited for desert operations. They can, however, throw tracks when traversing a rocky area. Their use is also limited in rough terrain with steep slopes. Wheeled vehicles may be used in desert operations; however, they normally have a lower average speed than track vehicles and a higher incidence of damage and malfunction. Wheeled vehicles often bog down in sandy areas and cannot traverse many of the rougher areas. Vehicles should carry extra repair parts (fan belts, tires, and other items apt to malfunction).

(8) *Radiant light*. The sun burns unprotected skin, and it may damage unprotected eyes. Soldiers should dress in loosely fitting clothing, use sunscreen to protect exposed skin, and wear sunglasses or goggles to protect their eyes. Soldiers should remain fully clothed. Removing clothing increases direct exposure of the skin to the sun and eliminates the beneficial cooling effects of the moisture trapped in clothing. Radiant light or its heat effects may be detrimental to plastics, lubricants, pressurized gases, rubber, and other fluids. All vehicles and aircraft should be kept well ventilated. When parked, windshields should be covered to reduce heat buildup inside. Supplies of all types should be stored in well-ventilated, shady areas. Placing supplies in covered holes in the ground may reduce the heat effects.

(9) *Humidity*. Humidity is a factor in some desert areas of the world, especially in the Middle East. Humidity can become a problem for short periods of time in other desert areas. Light coats of lubrication can help prevent rust; however, these benefits should be weighed against the dust gathering qualities of oil. Demisting equipment is used on optics and night vision equipment to reduce the effects of humidity.

(10) *Temperature variations*. Variations of temperature will require personnel to be issued suitable clothing for encountering extreme weather conditions. Temperature changes in a desert environment can range from 140°F midday to near freezing at night. Temperature variations can cause condensation in humid desert areas affecting optics, fuel lines, air tanks, and weapons. Expansion and contraction of air and fluids may cause vehicle and equipment problems. Vehicle and equipment operators must ensure that the effects of temperature variations do not become a significant problem. Temperature variations may cause—

- Tires to overinflate during the day and underinflate at night.
- Fuel tanks to overflow during the day resulting in a fire hazard.
- Oil fluid levels during the day to become overfull and cause a leak, or during the night as the oil cools, to provide insufficient lubrication.

(11) *Static electricity*. Static electricity is a factor in the desert. During refueling operations and when oxygen or other flammable substances are being used on board vehicles, it is important to remember that it presents a real hazard. Proper refueling procedures must be followed. Static electricity also causes severe shock to ground personnel in sling-loading and hoist operations. (Refer to FM 8-10-6 and 8-10-26 for additional information.)

c. To ensure success in desert operations, detailed planning is required. Factors to consider include the following:

- Water is as mission essential as any piece of unit equipment. Additional quantities of water are required for CHS operations for the survival of both medical personnel and patients. Load plans for all vehicles and aircraft must include water.
- Prescribed load lists are expanded to carry sufficient quantities of repair parts that are easily degraded by the environment.
- Covers should be fabricated (prior to deployment, if possible) for equipment (especially communications and electronic), supplies, and vehicles.
- Fuel usage and consumption are critical due to the extended ranges between supported units and the increased vulnerability for refueling sites in the open desert terrain.
- Appropriate clothing for both hot and cold weather is required.
- Petroleum, oils, and lubricants must be of the proper viscosity for desert operations. Maintenance services are also performed more frequently.

- Small packages/amounts of Class III packaged products should be used to avoid contamination by blowing sand.

- Filters of all types are consumed at a higher rate.

d. Training for desert operations is not significantly different than training for operations in other areas except for the following:

(1) *Mountain training*. Because many desert areas are in mountainous terrain, procedures and techniques for evacuation in mountainous terrain must be practiced by all CHS personnel. Special equipment requirements must also be planned for (paragraph 4-3).

(2) *Navigation*. Navigation on desert terrain varies from relatively simple to extremely difficult. Factors affecting navigation are—

- Type of desert.

- Scale and quality of available maps.

- Other navigational guides which are available.

- Ground vehicles must have compasses available as they may have to rely on compass headings and odometer readings to navigate.

- Use of convoys is a viable technique to ensure that ground vehicles do not get lost and to improve security.

e. For additional information on desert operations, refer to FMs 8-10-6 and 90-3.

4-5. Extreme Cold Weather Environment

a. Operations in extreme cold environment are adversely impacted by severe environmental conditions and rugged terrain. The tundra and glacial areas are harsh, arid, and barren. Temperatures may reach lows of -80°F to -100°F that, combined with gale force winds, make exposure unsurvivable. The greatest environmental detriment to operations is blowing snow, which reduces visibility to zero. This results in the loss of depth perception from total white conditions.

b. Other environmental considerations are as extreme but easier to circumvent. Solid footing is suspect in both the dead of winter and in the summer. Snow and ice cover crevasses, holes, and otherwise unstable ground. In traversing suspect ground situations, consider linking soldiers by ropes. During the summer, ground transportation maybe restricted than in any other environment due to the marsh and muskeg composition of the arctic tundra. In CHS operations, patients must be sustained for a longer duration due to terrain delays and the lack of direct evacuation routes.

c. Combat health support personnel may see an increase in the following types of DNBIs:

- Cold injuries (ranging from minor to severe frostbite, especially of exposed areas of the body and feet, to hypothermia).

- Dehydration and heat exhaustion.

- COSC. (The similarity of arctic and desert terrain may also cause disorientation and a sense of exposure.) Extreme cold can psychologically paralyze the inexperienced soldier and reduce him to a budding "survival first and only" mentality.

d. Factors to consider when conducting CHS activities in extreme cold operations include the following:

- Patients must be kept warm as the effects of the extreme cold can hasten and/or deepen shock.

- Improvised shelters may be required for patient holding (due to unexpected snow storms or vehicle breakdowns); the shelters should be capable of being heated (such as in a cave). The longer the period the patient must be held in the improvised shelter, the more important it is to fortify it against the effects of the cold.

- Blood and intraveneous (IV) fluids must be protected from freezing, both when in use and when stored.

- Establishing an ambulance shuttle system (FM 8-10-6) or AXPs are useful when operating in extended battle zones, or when evacuation distance and time required are increased.

- Augmentation of air and ground ambulances from higher echelon CHS elements and/or use of nonmedical transportation assets may also be required to meet the extended evacuation needs.

- Additional supplies of water should be carried by ambulances, and be available at MTFs.

- Due to the decreased temperature and frozen environment, vehicle maintenance requirements are increased. Lubricants must be of the correct viscosity for the temperature. In extreme cold, batteries perform less efficiently. Batteries may have to be removed from the vehicles and kept in a warm place to ensure prompt starting. Engines may also have to be kept running to avoid freeze-ups or long warm-up periods. All ambulances are considered deadlined without a functional heater in the patient compartment.

- The proper storage of medical supplies is essential to prevent loss from freezing.

- There are few terrain features or road networks; therefore, evacuation routes must be surveyed and marked over open terrain. At extreme altitudes, operations during the winter months are conducted in extended hours of darkness. The use of night vision goggles (NVG) may be required. Compass accuracy is inconsistent due to geomagnetic phenomenon.

- Landing zones must be chosen with extreme care in both winter and summer. Blowing snow mandates instrument-assisted takeoffs and running landings. Landing zones must be correspondingly larger.

e. The CHS planner must ensure that comprehensive plans are developed for extreme cold weather operations. Further, thorough preparation is required to ensure survival and mission accomplishment in this environment. Factors to consider include, but are not limited to, the following:

- Mud obstacles at noon may become an avenue of approach at night.
- Snow complicates all work. Snow-covered terrain—
  - Hampers reinforcements.
  - Muffles noise.
  - Makes cross-country driving hazardous.
  - Creates different camouflage requirements.
- A complete reappraisal of concealment is required because thermal signs may be used.
- Tracks in the snow destroy concealment.
- No soldier is assigned to any job alone. The buddy system is used at all times.
- Maintenance tasks will take twice as long as they do in more temperate climates.
- Bare metal can stick to skin or wet garments in subfreezing temperatures.
- Fuel spilled on skin or garments increases the freezing factor; it is one of the greatest causes of injury in winter operations.
- Petroleum, oils, and lubricant requirements will be increased in this environment.
- Every effort must be made to warm gear boxes and engines before starting the vehicle.
- The first consideration in the AO is heat; followed by shelter for sustained work.
- Soldiers need to stand clear of taut cables; steel tends to be brittle and breaks in extremely cold temperatures.
- Fire extinguishers are winterized by adding 15 percent nitrogen to the carbon dioxide.
- Radio sets must be warmed up prior to transmission. The sets may be turned on but should not transmit for $^{1}/_{2}$ hour.

- Frost shields (such as using the plastic bag in which the batteries are packed) should be placed over microphones.

- Grounding rods have to be buried horizontally instead of pounded vertically. Recovery of stakes and rods placed in the ground is significantly more difficult.

- Flooring is needed in heated areas because the heat will thaw the ground.

- Soldiers must take breaks for water and warmth.

- Static electricity presents a serious hazard especially around flammable products.

4-6. Nuclear, Biological, Chemical, and Directed-Energy Environments

a. On future battlefields, the enemy may employ NBC weapons/agents and directed-energy (DE) weapons/devices. Nuclear, biological, chemical, and DE protective measures and procedures to mitigate their effects must be included in the medical company training programs and daily operations. Nuclear, biological, and chemical actions create high casualty rates, materiel losses, obstacles to maneuver, and contamination.

(1) Mission-oriented protective posture levels 3 and 4 result in body heat buildup, reduction of mobility, and degradation of vision, touch, and hearing senses.

(2) Laser protective eyewear may degrade vision, especially at night.

(3) Toxic industrial material maybe released as a weapon application, accidental or by terrorist. The TIM may prevent use of terrain and create casualties.

b. Contamination is a major problem in providing CHS in an NBC environment. To increase survivability, as well as supportability, the medical company must take necessary action to avoid NBC contamination. Maximum use must be made of—

- Alarm and detection equipment.

- Unit dispersion.

- Overhead cover, shielding materiel, and collective protection shelter, when available.

- Chemical agent resistant coatings.

c. Generally, a biological aerosol attack will not significantly impact materiel, terrain, or personnel in the short term, although toxins can be an exception.

d. Field Manuals 3-3, 3-4, 3-5, 3-9, 3-100, 4-02.283, 8-50, 8-284, and 8-285 contain detailed information on—

- Characteristics and soldier dimensions of the nuclear battlefield.
- Nuclear, biological, and chemical operations.
- Extended operations in contaminated areas.
- Contamination avoidance.
- Nuclear, biological, and chemical protection.
- Decontamination.
- Prevention and medical management of laser injuries.
- Toxic industrial material hazard

e. Combat health support planning for the integrated battlefield must be comprehensive and thoroughly coordinated. In addition to the traditional CHS provided combat units, planning for EMT for civilian casualties, consistent with the military situation, should be included. The medical company commander should forecast the expected number of casualties, institute triage, and provide medical treatment. For additional information on CHS planning in this environment, refer to FMs 4-02.283, 8-10-6, 8-10-7, 8-50, 8-55, 8-284, 8-285, and 8-500.

(1) A new dimension on future battlefields will be the employment of DE weapons/devices. These may be laser, microwave, or radio frequency generated sources. Information on the prevention and medical management of laser injures is contained in FM 8-50.

(2) For information on the medical evacuation of patients in a contaminated environment, refer to FMs 8-10-7, 8-10-6 and 8-10-26.

4-7. Urban Operations

Throughout history, battles have been fought on urbanized terrain. Some recent historical examples include Hue, Beirut, Panama City, and Somalia. Urban operations are those military actions planned and conducted on a terrain where man-made structures impact on the tactical options available to the commander. This terrain is characterized by a three-dimensional battlefield, having considerable rubble, ready-made fortified fighting positions, and an isolating effect on all combat, CS, and CSS units. Of concern to the CHS planner is the need to plan, train, prepare, and equip for CHS from under, above, and at ground level.

a. The CHS plan must be flexible and capable of supporting unanticipated situations. Special equipment requirements for the provision of CHS include, but are not limited to—

- Axes, crowbars, and other tools used to break through barriers.

- Special harnesses; portable block and tackle equipment; grappling hooks; collapsible ladders; heavy gloves; and casualty blankets for shielding. This equipment is used to lower casualties from buildings or move them from one building to another at some distance above the ground.

- Equipment for the safe and quick retrieval from craters, basements, sewers, and subways. Casualties may have to be extracted from under rubble and debris.

b. Effective communications will be degraded in MOUT. The task-organized search and medical evacuation teams will have difficulty locating injured and wounded soldiers because of their isolation within buildings, or by their being hidden by rubble and debris. Once the area is secured, the wounded can display markers or panels, or other field expedients (fatigue jacket or T-shirts) to indicate where they may be found.

c. The anticipated increase in wounds and injuries requires increased supplies of IV fluids. Individual soldiers may carry these fluids to hasten their availability and shorten the time between wounding and initiation of vascular volume replacement.

d. Route markings to the division clearing station and the display of the Geneva Conventions emblem (red cross on a white background) at the MTF must be approved by the tactical commander. (Not displaying the Geneva Conventions emblem can forfeit the protections afforded to both medical personnel and their patients under the Geneva Conventions. Refer to Appendix A and FM 8-10 for additional information.) The location of the MTF must be as accessible as possible, but well separated from fuel and ammunition depots, motor pools, reserve forces, or other lucrative enemy targets, as well as civilian hazards such as gas stations or chemical factories.

e. Casualty collection points, AXPs, BASs, and division clearing station locations should be preplanned and in relatively secure areas accessible to both air and ground ambulances. The location of these points should be indicated on the medical overlay to the OPLAN.

f. The medical company/troop, in establishing its clearing station, uses only the minimum number of resources required to successfully accomplish the mission. Suitable permanent facilities within the urban area may be used to house the MTF, if available. Refer to Appendix J for clearing station in urbanized operations (UO).

NOTE

Construction standards vary from area to area. Engineer personnel should inspect local facilities prior to use as an MTF.

g. For additional information on medical evacuation in urban operation, refer to FM 8-10-6.

4-8. Combat Health Support During Night Operations

To *own the night* requires tactics, techniques, and procedures that maximize our night-fighting technological advantages. Command and control is one of the most important factors in conducting night operations. The mission of maneuver forces is to destroy the enemy without committing fratricide. To achieve this end state, all soldiers must operate as efficiently at night as during the day; moreover, leaders must master night C2.

a. General Considerations.

(1) The DSS and the brigade surgeon's section (BSS)/regimental surgeon's sections (RSS), along with medical company/troop commanders, must anticipate that supported maneuver brigades and division units do a substantial amount of their work at night or in limited visibility. They must ensure that TSOPs are available and used throughout the division and brigade for providing medical evacuation and treatment at night. Real-life trauma care at night will be enhanced by the ability to use white light (visible light) at the earliest opportunity. Therefore, medical units/elements must establish standard procedures to use white light without compromising the tactical environment. This means training to erect shelters as soon as possible and routinely during hours of darkness. Personnel must understand that some shelter systems block visible light, but that those same shelters glow when viewed through NVG. In some extremely mobile situations, ambulance/vehicles could be used to enclose patients and care providers thus allowing treatment to proceed under white light conditions. The DSS and BSS, along with medical company commanders, must understand this technology and their capabilities for conducting night operations. The brigade surgeons and medical company commanders should know how to use both far infrared (IR) devices (and how their capabilities can enhance CHS operations at night) such as the combat identification panel (CIP) and near IR devices such as the Budd Light and Phoenix Light towers. See the discussion below on IR and night-vision devices. They need to know the status and amount of equipment on-hand and to identify the equipment needed. The BSS/RSS must plan the standard operating procedures and METT-TC-specific techniques necessary to perform the CHS mission. For these types of operations, the commander should be advised to consider—

- Using civilian buildings to reduce light and thermal signatures.
- Light-proofing shelters.
- Using nonvisible spectrum light in conjunction with night vision devices.
- Reducing noise signature to a minimum.

(2) The DSA and BSA are susceptible to a night attack. This further slows logistics and CHS activities. Use of chemical lights may be applicable. However, overuse of chemical lights degrades light discipline and security. Chemical lights are visible from a distance of a kilometer or more. Possible techniques for medical units/elements include an array (mixture) of—

- Chemical lights to light CP areas thus eliminating generator noise and thermal signature.

- Magnetic holders to allow placement of color chemical lights on vehicles.
- Chemical light to illuminate the vehicle engine compartment for night repairs.
- Chemical light holders to regulate the amount and direction of light.

b. *Combat Health Support Considerations*.

(1) Light discipline requirements affect CHS operations much as they do supply and maintenance operations. Medical units/elements will use additional fuel to run vehicle-mounted night sights. Treatment operations require lightproof shelters. Patient acquisition is more difficult. Units should employ some sort of casualty-marking system such as luminous tape.

(2) Limited visibility slows medical evacuation. This requires additional ground ambulances to compensate. In the offense, ambulances move forward with BAS. However, personnel have to accomplish this movement carefully to avoid signaling the threat. Personnel use predesignated AXPs. Medical evacuation by air ambulance is difficult and requires precise grid coordinates as well as prearranged signals and frequencies. As in daylight, CHS operations conducted at night require active participation of all involved units. Maximum use of the global positioning system (GPS) and IR and night-vision devices, will enhance the ability of medical units/personnel to carry out CHS in support of night missions. Night operating procedures must be routine and practiced as a part of routine operating procedures. This is especially true for medical units/personnel since they have a 24-hour responsibility under all conditions, not just combat operations.

c. *Infrared and Night Vision Devices*.

(1) A far IR device, such as the CIP, is a quick-fix device for friendly identification. The thermal taped-covered CIP provides an aid in distinguishing friendly from threat vehicles when thermal sights are used. Combat identification panels do not replace current acquisition, identification, or engagement procedures. They provide a device visible through thermal sights to increase situational understanding and provide a safety net at normal engagement ranges. These devices can be used to further identify medical vehicles and units.

(2) Near IR devices that aid in C2 may be used for signaling and marking devices. The IR beam is an effective means to increase situational understanding, improve identification, and increase CHS effectiveness. These devices reduce fratricide risk when used for marking AXPs, MTF, and landing zones (LZs). Additionally, these lights are super signaling devices, such as the configuration of certain patterns to indicate unit identification, turn on/off to signal accomplishment of a task, crossing a phase line, signal from one ground position to another specific position, or from ground to air. These are excellent devices for near recognition signaling to guide incoming evacuation vehicles.

(*a*) The Budd Light operates using active near IR light viewed through image intensifying devices. These image-intensifying devices are only effective during nighttime conditions. Near IR devices can be directional or omni-directional and emit a steady pulse or codable pulse. The Budd Light is a compact near IR source using a standard 9-volt (BA-3090) battery as its power source. Both the Budd

Light and its power source will fit in the palm of your hand. The average life span of the battery power for a Budd Light is 8 hours of continuous use. The near IR pulse emitted by the Budd Light is similar to a strobe light and pulses every 2 seconds. It is invisible to the naked eye and to the thermal imager. The pulse is clearly visible out to 4 kilometers (km) under optimal conditions when pointing the beam directly at the viewer. The directional characteristic of the beam makes it possible to limit observation by an enemy. If used to mark vehicles, care should be taken to minimize the light illuminating the vehicle's surface. The enemy has to have image intensifying devices to see the lights directly; however, they may see the light being reflected off of vehicles when the lights are employed in a directional mode. This device is most effective for C2 purposes. The Budd Light is also very useful for dismounted operations at night.

(*b*) The Phoenix Light tower operates using active near IR light viewed through image intensifying devices. The Phoenix Light tower can be used as a codeable IR beacon. The light is powered by a standard 9-volt (BA-3090) battery. The Phoenix Light tower is ideal for use when positive identification at night must be made out to 4 km under optimal conditions. The IR beacon has a range equal to the Budd Light. One advantage is the ability to code many beacons with different codes (sequence of flashes [including Morse code] up to 4 seconds), enabling anyone to be distinguished in a group. A programmed sequence will repeat until canceled or when the battery expires (same as Budd Light). Operating instructions include connecting the battery to the Phoenix Light tower. Using a metal object (a coin is best), make connection across the two pins on top of the light. A microminiature red indicator flashes the sequence as the code is entered. At the end of the 4-second memory, a green microminiature indicator will flash, indicating the end of the input sequence. The Phoenix Light tower is now emitting the desired code. To check the code, make a connection across the pins. The green microminiature indicator will flash the code. To change the code, disconnect the battery and repeat the instructions. The Phoenix Light tower also can be used during dismounted operations. The programming of a code can assist in distinguishing one unit from another. An active Phoenix Light tower or Budd Light can be covered or uncovered as necessary to ensure the light is visible only when necessary.

(*c*) There are numerous types of night vision devices in the Army inventory but this subparagraph will focus on what the medical company/troop has on its TOE. Each vehicle in a medical unit will have two night vision devices. Wheeled vehicle drivers will use either the AN/PVS-7B (discussed below) or the driver's vision enhancer (DVE). The DVE is a thermal imaging system capable of operating in degraded visibility conditions such as fog, dust, smoke, and darkness. In conditions of reduced visibility, the DVE allows a vehicle to maintain speeds up to 55 to 60 percent of those attained during normal daylight operations. Unlike traditional night vision devices that magnify ambient light, the DVE generates a picture based on very minute variances in temperature in the surrounding environment. It gives the operator visibility to the horizon in total darkness and the ability to recognize a 22-inch object at a distance of 360 feet. It can elevate 35 degrees, depress 5 degrees, and rotate 170 degrees in either direction. The DVE consists of a sensor module, a display control module, a positioning module, wiring harness, and mounting equipment. A combat DVE and a tactical wheeled vehicle DVE will be available. The track ambulances (M113), interim armored vehicle ambulances**,** and M577 track treatment vehicle drivers will use DVE if available or continue to wear NVG. The NVG (AN/PVS-7B) is a hand-held, head-mounted, or helmet-mounted night vision system that enables walking, driving, weapons firing, short-range surveillance, map reading, treatment of patients, and vehicle maintenance in both moonlight and starlight. It has an IR projector that provides illumination at close range and that can be used for signaling. If the device is exposed to damaging levels of bright light, there is a high light-level shutoff. There is a compass that

attaches to the device that allows for reading an azimuth through the goggles. This device has a weight of 1.5 pounds and operates on two AA batteries. Armored medical vehicles (M577, treatment vehicle and M113, armored ambulance) have IR headlights. These IR headlights can be used for assisting drivers who wear NVG and can be used for signaling. As with all lights, extreme caution must be taken in tactical situations. The IR headlights are typically very bright to personnel wearing NVG.

d. Example Techniques for Using Chemical Lights for Marking and Signaling.

NOTE

Techniques are only limited to available equipment and imagination.
The METT-TC factors should always take precedence.

(1) For marking, chemical lights can be placed along side standard military short or long tent stakes/pickets to mark routes and positions. The concave side of the tent stake contains the chemical light and the convex side faces the most likely direction of enemy observation. This technique controls the direction of the light while assisting with such things as medical evacuation route and supported unit collection point, AXP, or link-up point identification.

(2) For signaling, tying a chemical light to a length of cord or string and slinging it in a circle overhead is an unmistakable signal. This only needs be used until recognition is established; it is ended once the signal is seen. This technique makes use of widely available common supplies. It is especially useful for guiding an incoming ground or air ambulance.

4-9. Army Special Operations Forces

Combat health support for Army Special Operations Forces (ARSOF) is usually accomplished by unit-level organic CHS resources, Special Operations Support Battalion assets, and the theater or corps MEDCOM. A combination of organic, DS, and GS resources are required to effectively accomplish the CHS mission. Army Special Operations Forces are characterized by an austere structure and a limited number of medical personnel with enhanced medical skills including EMT, ATM, PVNTMED, and limited veterinary and dental care. In addition, ARSOF support units have flight surgeons and medics who are qualified to provide Echelon I care. Special Forces Operational Detachment A (SFODA) and Ranger companies are also capable of providing organic Echelon I care. Medical personnel of this detachment receive enhanced medical training above that provided for a regular combat medic. Each Special Forces medical sergeant (SFMS) trained as an independent care practitioner and is qualified to provide ATM to combat casualties. When the SFODA is deployed on independent missions, the two SFMSs are the sole source of medical care for the operational detachment and the indigenous forces that the detachment supports. When not deployed, the ARSOF depend upon the conventional CHS system for support.

a. The conventional force medical company would normally provide CHS on an area basis for those ARSOF operating within its AO. Due to the security classification of particular ARSOF missions, the

medical company may be required to ensure that medical personnel selected to treat ARSOF patients sign a nondisclosure statement.

b. The nature of ARSOF missions often requires that a unit be small, highly skilled, and have self-contained teams that can be easily inserted and extracted by air, sea, and land delivery methods. These missions are often conducted in remote and denied areas. This generally results in the inability of conventional CHS resources to be able to support deployed ARSOF. For example, conventional forces' ground and air ambulances cannot be used to evacuate sick, injured, or wounded ARSOF from covert operations due to lack of range, self-protection measures, crew qualification, or specialized navigation equipment.

c. Although augmentation of ARSOF medical resources may be required for a number of types of missions, the most likely mission where medical company resources would be employed in DS or GS is the foreign internal defense mission.

d. For additional information on medical support of ARSOF, refer to FM 8-43 and FM 8-10-6.

e. For additional information on ARSOF operations, refer to FMs 3-05.20 and 100-25.

APPENDIX A

LAW OF WAR AND GENEVA CONVENTIONS OBLIGATIONS FOR MEDICAL PERSONNEL

A-1. Law of War

a. Sources.

(1) Sources for the *Law of Land Warfare* obligations of the US are treaties ratified by the US. As such, they are part of the supreme law of the land. The US is obligated to adhere to these treaty obligations even when an opponent does not. It is the policy of the DOD and the US Army to conduct its military operations in a manner consistent with these treaty obligations.

(2) In the area of CHS, the *Law of Land Warfare* sources are the Geneva Conventions for the Protection of War Victims of 12 August 1949. Questions regarding implementation and interpretation of these treaties should be directed to the command judge advocate, or to the Office of the Judge Advocate General of the Army.

(3) For an additional source of information, see FM 27-10.

b. Geneva Conventions. The four 1949 Geneva Conventions are as follows:

(1) Geneva Convention for the Amelioration of the Condition of the Wounded and Sick in the Armed Forces (GWS). This convention provides for the protection of Armed Forces personnel who are wounded and sick on the battlefield. It requires States Parties to a conflict to take all possible measures to search for and collect the military wounded and sick; to protect them against pillage and ill treatment; to ensure their adequate care; and to search for the military dead. It also provides for the protection of AMEDD personnel. The GWS is the primary source for the obligations set forth in this appendix.

(2) Geneva Convention for the Amelioration of the Condition of Wounded, Sick and Shipwrecked Members of the Armed Forces at Sea (GWS [Sea]). This treaty extends the guarantees of the GWS for wounded, sick or shipwrecked military personnel at sea. Once those personnel are placed on land, the GWS provisions apply.

(3) Geneva Convention Relative to the Treatment of Prisoners of War (GPW). This treaty provides protection for military personnel who fall into enemy hands. Captured military wounded and sick remain prisoners of war during their recovery from their wounds or sickness, and for the duration of their captivity.

(4) Geneva Convention Relative to the Protection of Civilian Internees in Time of War (GC). The convention provides for the protection of civilians in the hands of enemy military forces, or who are in enemy-occupied territory. It also sets forth standards for their medical care.

A-2. Medical Implications of Geneva Conventions

a. Provisions for Collection of Wounded and Sick. Provisions must be made for the collection and treatment of military wounded and sick personnel, whether friend or foe. Only urgent medical reasons

may determine priority in the order of treatment to be administered. This means that wounded or sick enemy military personnel may require treatment before US military wounded or allied personnel. The principle of triage is consistent with this obligation. For military wounded or sick enemy military personnel, a dual responsibility exists—custodial and medical. The custodial activity of guarding military wounded or sick enemy prisoners of war (EPW) should be carried out by assets other than AMEDD personnel. The echelon commander will designate nonmedical units to act as guards when EPW are in medical channels.

b. *Accountability and Custody of Enemy Prisoners of War*. Enemy prisoners of war or retained personnel (RP) evacuated through medical channels must be identified and their accountability established prior to evacuation per appropriate TSOP. Sick, injured, and wounded EPW or RP may be evacuated through normal medical channels, but segregated from US and allied personnel. They may also be evacuated through dedicated or task-organized evacuation assets, particularly in rear areas where they are likely to be moved in a group.

c. *Responsibility for and Handling of Prisoners of War*. The US Army is responsible for the care and treatment of EPW and RP Army units capture, and for EPW/RP captured by other US Services or allies upon their transfer to Army custody. Below brigade level, EPW/RP are handled by combat troops who bring them to the forward or brigade collecting points. Subject to the tactical situation and available resources, EPW/RP wounded, injured, or sick will be evacuated from the CZ as soon as possible. Only those injured, sick, or wounded EPW/RP who would run a greater health risk by being immediately evacuated may be temporarily kept in the CZ. When intelligence sources indicate that large numbers of EPW/RP may result from an operation, medical units may require reinforcement to support the additional EPW/RP patient workload. In this case, the care of wounded, injured, and sick EPW/RP becomes a joint matter between the ground combat commander and the medical commander. Procedures for estimating the medical workload involved in the care and treatment of EPW/RP is described in FM 8-55. For a more detailed discussion on the administration, handling, treatment, and identification of EPW/RP, see AR 190-8 and FM 19-4.

d. *Identification and Protection of Medical Personnel*.

(1) Personnel *exclusively engaged* in the performance of medical duties in connection with the wounded, injured, or sick in medical units or establishments may wear, affixed to the left arm, a water-resistant brassard/armband bearing the distinctive emblem (a red cross on a white background) prescribed by GWS and GWS (Sea). The wearing of brassards/armbands will be at the discretion of the tactical commander in far forward areas.

(2) Medical personnel (as identified in paragraph [1]) are to carry a special identity card, Department of Defense (DD) Form 1934 (Geneva Conventions Identity Card for Medical and Religious Personnel Who Serve in or Accompany the Armed Forces), issued to all persons qualifying as protected medical personnel (see AR 600-8-14). This special identification card will be carried in addition to their regular identification card.

(3) Enemy military personnel meeting the definition of medical personnel contained in paragraph (1) who are captured are considered RP and not EPW. They will receive the benefits and

protection afforded them by the GWS and GPW. They may be required to treat injured, wounded, or sick EPW/RP. United States medical personnel or medical units that are captured may be required to do likewise, continuing to provide medical support for injured or sick US or allied prisoners of war/RP while in captivity. In such a situation, this probably would be a primary source of treatment for US prisoners of war and RP, although enemy wounded could be treated also.

(4) Personnel protected as medical personnel under the GWS must be *exclusively engaged* in medical duties or administration of medical units. This includes all military personnel permanently assigned to a medical unit and *exclusively engaged* in its mission, including cooks, mechanics, drivers, or administration personnel. Performance of any activity inconsistent with this mission removes the protection and the DD Form 1934 must be withdrawn. For example, if an ambulance driver is tasked with driving an unmarked tactical vehicle forward with ammunition prior to evacuating casualties, he would not be *exclusively engaged* in medical duties and would not be entitled to continued classification as *medical personnel*.

e. *Self-Defense*.

(1) Medical personnel may carry small arms for personal defense of themselves and defense of their patients. This does not mean that they may resist capture or otherwise fire on the advancing enemy. It means that, if civilians or enemy military personnel are attacking and ignoring the marked medical status of medical personnel, medical transportation or the medical unit, the medical personnel may provide self-protection. If an enemy force merely seeks to assume control of a military medical facility or a vehicle for the purposes of inspection and without firing on it, the facility or vehicle may not resist.

(2) Medical personnel are entitled to carry defensive small arms only. By Army policy, these are defined as service rifles (M16) and pistols (M9 or M11).

(3) An overall defense plan may not require medical units to take offensive or defensive action against enemy troops at any time. If a medical force is part of a defensive area containing nonmedical units, medical personnel may not be responsible for manning part of the overall perimeter. If located in isolation, the medical unit may provide its own local and internal security if other support is not available. However, a medical unit may not be defended from capture or inspection by enemy forces by military police or other soldiers acting as pickets.

(4) If medical personnel fire on enemy troops or otherwise abuse their protected status by engaging in acts harmful to the enemy, they may be attacked. It is also possible that such a violation could result in an allegation of violation of the law of war by the capturing force. For example, if an enemy force was advancing on a marked medical facility and medical personnel within the facility then took advantage of their protected status to fire at the enemy, the enemy forces would be entitled to return fire and medical personnel subsequently captured may be charged with a violation of the law of war. Under the law of war, this action would constitute an act of perfidy. It would be akin to firing on enemy soldiers while bearing a flag of truce.

This paragraph implements STANAGs 2454 and 2931.

A-3. Distinctive Markings and Camouflage of Medical Facilities and Evacuation Platforms

a. Medical Units and Facilities.

(1) All US medical facilities and units, except veterinary, display the distinctive flag of the Geneva Conventions. This distinctive emblem (red cross on a white background) provided in the GWS and GWS (Sea) for medical units, facilities, and transportation shall be displayed only over such medical units and facilities as are entitled to be respected under the conventions, subject to the authorization of the tactical commander of a brigade-size or larger unit. The marking of facilities and the use of camouflage are incompatible and should not be undertaken concurrently. The camouflage of medical units is regulated by Army regulations and also, in the European theater, by NATO STANAG 2931. It is not envisioned that fixed, large medical facilities will be camouflaged. The medical commander must be aware of who has the authority to order camouflage and its duration. The camouflage of medical facilities is one of the more difficult issues to reconcile with operational necessities. The problem has been present in past wars but now is more critical due to the ability of intelligence assets to see deep into the rear AO. If the failure to camouflage endangers or compromises the tactical mission, the camouflage of medical facilities may be ordered by a NATO commander of at least brigade level or equivalent. Such an order is to be temporary and local in nature and is rescinded as soon as circumstances permit.

(2) Camouflage of medical facilities (medical units, medical vehicles, and medical aircraft on the ground) is authorized when the lack of camouflage might compromise the tactical operation. If the failure to camouflage endangers or compromises tactical operations, the camouflage of medical facilities may be ordered by a NATO commander of at least brigade level or equivalent. Such an order is to be temporary and local in nature and is countermanded as soon as circumstances permit. It is not envisioned that large, fixed medical facilities will be camouflaged.

NOTE

As used in this context, camouflage means to cover up or remove the emblem. The black cross on an olive background is not a recognized emblem of the Geneva Conventions.

(3) The camouflage of a medical unit does not deprive it of its protected status. However, an enemy force is not required to forego an attack on a camouflaged facility unless it recognizes it as a medical facility. The use of defensive arms by medical personnel at a camouflaged site attacked by ground maneuver forces is not authorized unless the actions of the attacking forces clearly are illegal rather than the result of mistaken identity. Medical personnel should attempt to make the attackers aware of their status rather than fighting back.

(4) If medical facilities are used to commit acts harmful to the enemy, the protection of those facilities may be withdrawn if the acts are not stopped after warning. This might be the case where a facility is used as an observation post or if combat information was reported or relayed through the facility.

b. Medical Evacuation Platforms.

(1) Standard air and ground evacuation platforms should be marked with the distinctive emblem when performing medical missions. Medical transportation may not bear the distinctive emblem if and so long as it is used for nonmedical missions. Fighting vehicles, such as a tank, are not entitled to bear the distinctive emblem even when used for battlefield evacuation. However, aviators and drivers with status as medical personnel may not perform nonmedical tasks without risk of loss of their medical personnel status. As such, the policy that benefits the mission to the greatest degree is to use air and ground medical transportation exclusively for medical tasks.

(2) Crew-served weapons may not be mounted on ambulances or air ambulances, even if mounting brackets are present.

(3) Vehicles other than fighting vehicles (such as tanks or Bradley fighting vehicles) may be used in a dual role, moving wounded to the rear bearing removable distinctive emblems. However, the distinctive emblems must be removed before nonmedical tasks are attempted. Care must be taken so that the protection provided by the distinctive emblem is not abused.

(4) The protection provided medical aircraft bearing the distinctive emblem extends only to areas in which it is entitled to operate due to the absence of enemy forces or, if enemy forces are present, with the consent of enemy forces. If the latter, medical aircraft may operate only at such times and on such routes for which there is agreement, and medical aircraft must land to be searched if summoned to do so by enemy forces. Failure to respond to a summons to land may entitle the enemy to attack the aircraft. Medical aircraft may be used for combat search and rescue (CSAR) missions if all vestiges of its medical aircraft status, such as the distinctive emblem, are removed for the duration of the CSAR mission. In such cases, it would not be operating as a medical aircraft but as a military aircraft. The legal prohibition is not on the use of an aircraft normally dedicated to medical missions, but on use of its status as a medical aircraft during any CSAR mission. If used for CSAR missions, military aircraft are not entitled to protection from enemy attack.

A-4. Civilian Wounded and Sick

Civilians who are injured, wounded, or become sick as a result of military operations may be collected and provided initial medical treatment in accordance with theater policies. If treated, treatment will be on the basis of medical priority only and they shall be transferred to appropriate civil authorities as soon as possible. The echelon commander and medical unit commanders jointly exercise responsibilities for custody and treatment of the sick, injured, or wounded civilian personnel. Enemy civilians detained by US forces are entitled to military medical care during their detention. Treatment will be on the basis of medical priority only.

A-5. Captured Medical Supplies

Because medical supplies and equipment captured from the enemy are considered neutral and protected, they are not to be intentionally destroyed. If these items are considered unfit for use, or if they are not needed for US and allied forces, noncombatants, or EPW patients, they may be abandoned for enemy use. Since captured medical personnel are familiar with their medical supplies and equipment, the captured items are especially valuable in the treatment of EPW. Use of these captured items for EPW and the indigenous population helps to conserve other medical supplies and equipment. When the capture of US medical supplies and equipment by enemy forces is imminent, these items are not to be purposely destroyed. Every attempt must be made to evacuate them. Those items that cannot be evacuated should be abandoned; however, such abandonment is a command decision.

A-6. Compliance with the Geneva Conventions

a. As the US is a signatory to the Geneva Conventions, all medical personnel should thoroughly understand the provisions that apply to CHS activities. Violation of these Conventions can result in the loss of the protection afforded by them. Medical personnel should inform the tactical commander of the consequences of violating the provisions of these Conventions.

b. Outright violations of the Geneva Conventions result when—

- Medical personnel are used to man or help man the perimeter of nonmedical facilities, such as unit trains, logistics areas, or base clusters.
- Medical personnel are used to man any offensive-type weapons or weapons systems.
- Medical personnel are ordered to engage enemy forces in other than self-defense, or in the defense of patients and MTFs.
- Crew-served weapons are mounted on a medical vehicle.
- Mines or booby traps are placed in and around medical units and facilities.
- Hand grenades, light antitank weapons, grenade launchers, or any weapons other than rifles and pistols are issued to a medical unit or its personnel.
- The site of a medical unit is used as an observation post, a fuel dump, or an ammunition storage site.

c. Possible consequences of violations described in *b* above are—

- Loss of protected status for the medical unit and personnel.
- Medical facilities attacked and destroyed by the enemy.

- Medical personnel being considered prisoners of war rather than retained persons when captured.

- Combat health support capabilities being decremented.

d. Other examples of violations of the Geneva Conventions include—

- Making medical treatment decisions for the wounded and sick on any basis other than medical priority, urgency, or severity of wounds.

- Allowing the interrogation of enemy wounded or sick even though medically contra-indicated.

- Allowing anyone to kill, torture, mistreat, or in anyway harm a wounded or sick enemy soldier.

- Marking nonmedical unit facilities and vehicles with the distinctive emblem or making any other unlawful use of this emblem.

- Using medical vehicles marked with distinctive Geneva Conventions emblem for transporting nonmedical troops, equipment, and supplies.

- Using a medical vehicle as a tactical operations center (TOC).

e. Possible consequences of violations described in *d* above are—

- Criminal prosecution for war crimes.

- Reprisals taken against our wounded in the hands of the enemy.

- Medical facilities attacked and destroyed by the enemy.

- Medical personnel being considered prisoners of war rather than retained persons when captured.

APPENDIX B

COMBAT HEALTH SUPPORT PLANNING

Section I. COMBAT HEALTH SUPPORT ESTIMATE

B-1. General

a. The staff prepares estimates on their areas of expertise to assist the commander in the decision-making process. The staff estimate consists of significant facts, events, and conclusions based on current or anticipated situations and recommendations on how available resources can best be used. These recommendations are used by the commander to—

- Identify and eliminate from consideration the courses of action (COA) that are not feasible.

- Select the best COA for further analysis.

b. Adequate plans hinge on early and continuing estimates by staff officers. Failure to make these estimates may lead to errors and omissions in the development of a COA.

c. Regardless of the level of command, the military planning process remains unchanged; however, the level of detail and the means of communicating (verbal or written) will differ. At the medical company level, many procedures are already set forth in TSOPs, thereby effectively limiting the level of detailed input required for preparation of the estimate. Although the level of detailed information contained in this appendix is considerable, it is provided for illustrative and educational purposes. In the medical company situation, for example, the CHS estimate for medical company operations may be verbal since TSOPs cover routine activities; however, the FSMC commander may be required to provide a formal written estimate to the FSB support operations for inclusion in the FSB estimate. Additionally, the brigade surgeon may be required to provide formal written input for inclusion in the brigade estimate.

d. For additional information on the CHS estimate, refer to FM 8-42 and FM 8-55.

B-2. Responsibilities

After the commander provides his planning guidance, the surgeon should prepare estimates of requirements and descriptions of projects to be undertaken for establishing adequate CHS systems to support the mission. The surgeon makes a CHS estimate that may stand alone or that may be incorporated into the personnel estimate. The estimate forms the basis for the subsequent CHS plan. The estimate is a logical and orderly examination of all the factors affecting the accomplishment of the mission to determine the most suitable COA. All of the significant CHS possibilities that can affect the accomplishment of the tactical commander's mission must be considered. The CHS estimate, along with estimates of the other individual staff members, is used by the commander in preparing his own estimate. It provides him with information on which to base his selection of the best COA. This decision is then included in the operational and logistics support plans.

B-3. Format for the Estimate

a. A sample format for a CHS estimate is presented in paragraph B-4. This format is applicable to any level of command and can be used under any operational condition. It is lengthy and includes many more details than may be needed in some situations. Depending on the situation and the unit for which the estimate is being completed, organic capability of certain functional areas may not exist. The estimate, however, must include these areas as support or augmentation from corps assets may be required, such as CSC and veterinary services. Each CHS planner must tailor the estimate to meet his needs. The estimate is a continuous process; as the battle continues, new factors and COA are developed and impact on the estimate.

b. Staff estimates may be presented orally or in writing. Often only the staff officer's conclusions or recommendations are presented to the commander.

c. Depending on the level of command, separate estimates may also be made for the dental, PVNTMED, veterinary, and CSC functional areas. For information on these estimates, refer to FM 8-55. For additional information on the unique aspects of planning for medical operations in peacetime and conflict, refer to FM 8-42.

d. The format for the estimate should be considered more as a tool to assist the planner than as a rigid format that might complicate the task. Examples of information that may be required or considered are provided for the different subheadings. They are not to be considered as an all-inclusive listing, but rather as a starting point for consideration.

B-4. Sample Format for the Combat Health Support Estimate

_____
(Classification)

Headquarters
Location
Date, Time, and Zone

COMBAT HEALTH SUPPORT ESTIMATE OF THE SITUATION

References: *Maps, overlays, charts, or other documents required to understand the estimate. Reference to a map includes the map series number and country or geographic area, if required; sheet number and name; and edition and scale.*

1. MISSION (*Statement of the overall CHS mission.*)

_____
(Classification)

(Classification)

2. SITUATION AND CONSIDERATIONS (*Consists of facts, assumptions, and deductions that can affect the successful support of an operation*.)

a. Enemy Situation. (*Includes such issues as the enemy's ability to interfere with the delivery of CHS, his attitude toward the Geneva Conventions, his ability to inflict casualties* [*both combat and disease*], *types of weapons available, and the health status of potential EPW*.)

(1) Strength and disposition. (*Includes information on the numbers and types of enemy forces, which will be encountered, and on their distribution throughout the battle area. This entry may indicate where weak areas exist in the enemy's defenses*.)

(2) Combat efficiency. (*Includes information on training received by enemy forces, previous battles, degree of fatigue and nutrition, and other factors that may indicate how effective the enemy force may be*.)

(3) Capabilities. (*Includes the conventional warfare capabilities and the potential for use of WMD*.)

(4) Logistics situation. (*The logistics situation provides insight on the enemy's ability to fight a sustained battle and indicates weak areas that may be exploited by friendly forces*.)

(5) State of health. (*This is an important issue as it may affect the enemy's will, desire, and ability to continue fighting. It may also provide some insight into the numbers of anticipated EPW and the CHS requirements for this subpopulation.* ***NOTE:*** *Historically, the number of EPW has been under-estimated*.)

(6) Weapons and weapons systems. (*Includes the weapons systems, which are available, and those that could be used to deliver NBC and DE weapons/devices. The types of weapons used may dictate the type and distribution of wounds throughout the battlefield*.)

b. Friendly Situation. (*Includes the tactical plan of the commander, anticipated areas of patient densities, best placement of supporting CHS elements, health of the command, rear operations, and base clusters*.)

(1) Strength and disposition. (*Includes not only US Army troops, but also sister Services, allies, coalition, and HN forces, which must be supported. The disposition throughout the battlefield may indicate the areas of the heaviest patient densities, lines of patient drift, and potential evacuation routes* [*both ground and air*].)

(2) Combat efficiency. (*Includes training, experience, morale, and recent campaigns*.)

(Classification)

(Classification)

(3) Present and projected operations. (*Includes the current mission and all follow-on missions. This subparagraph can provide information on the potential for augmentation, reinforcement, and/or regeneration. It may also indicate requirements for CSC support after particularly heavy fighting*.)

(4) Logistics situation. (*Includes information on supply/resupply operations* [*both general and medical*]*, location and hours of establishment/disestablishment of the facility, stockage levels, distribution points, and US and HN medical/nonmedical transportation support availability for patient evacuation*.)

(5) Rear battle plan. (*Includes information on responsibilities and procedures for MASCAL situations and rear area protection operations*.)

(6) Weapons. (*Medical units only have defensive weapons; however, the types of weapon systems being used may dictate types of wounds, potential injuries, and security*.)

c. Characteristics of the Area of Operations. (*The CHS planner should obtain medical intelligence regarding the AO. This information should be included in the planning process, as the medical threat will influence the numbers and types of casualties*.)

(1) Terrain. (*Includes any special equipment requirements needed to conduct the CHS mission, such as mountain climbing equipment or bed nets; effect on medical evacuation* [*to include potential landing sites and ambulance turnaround*]*; and effect on layout of unit resources*.)

(2) Weather. (*Includes its effect on aeromedical and ground evacuation of casualties; care of the wounded in adverse weather conditions, such as extreme cold weather operations; and effect on supplies and equipment, such as storage requirements* [*hot or extreme cold*]*, maintenance requirements, and repair parts usage*.)

(3) Civilian population. (*Includes potential requirements for providing CHS assistance* [*to include Geneva Conventions requirements or civic action programs*]*; endemic and epidemic diseases in the population; any rules, regulations, or laws affecting interaction between military and civilian populations; and pertinent information on cultural aspects of the country* [*to include social, political, religious, and economic considerations*].)

(4) Flora and fauna. (*Includes poisonous reptiles, dangerous animals, disease vectors* [*such as arthropods*]*, poisonous plants, or other medically significant information* [*such as medicinal herbs and plants*] *in the AO*.)

(5) Local resources. (*Includes information on any significant assets, which are available to the military force such as buildings, food sources, water sources, potential repair and maintenance facilities and capabilities, POL, hospitals, and clinics*.)

(Classification)

(Classification)

(6) Other. (*Any significant information not covered previously, such as language requirements*.)

d. Strengths to be Supported. (*Includes the different categories of personnel described below. Emphasis should be placed on accurately forecasting the numbers of refugees, displaced persons, and EPW that will require support. Large numbers of these personnel can severely strain the CHS capabilities* [*in particular the PVNTMED and treatment arenas*].)

(1) Army.

(2) Navy.

(3) Air Force.

(4) Marines.

(5) Allied forces.

(6) Coalition forces.

(7) Enemy prisoners of war. (*Every effort must be made to arrive at a realistic forecast of the EPW population. Traditionally, the US forces have underestimated the number of enemy soldiers who will be captured or who will surrender. By underestimating the EPW population, adequate medical supplies and equipment have not been available when needed and have, therefore, adversely affected the delivery of health care*.)

(8) Indigenous civilians.

(9) Detainees (*Enemy medical personnel are not considered EPW and should be identified as soon as possible to assist in providing medical care for the EPW patients*.)

(10) Internees.

(11) Others. (*May include contractors on the battlefield, humanitarian nongovernmental organizations* [*NGOs*], *international organizations* [*such as the United Nations*], *refugees, or others as determined by the Law of Land Warfare and/or the command*.)

e. Health of the Command. (*Consists of the following factors, which indicate command and medical measures that should be taken into consideration prior to each operation*.)

(Classification)

(Classification)

(1) Acclimatization of troops. (*Includes requirements for acclimatization of newly arriving troops or for forecasted operations, such as mountain operations*.)

(2) Presence of disease. (*Includes the endemic diseases that are not at a clinically significant level in the native population. Deploying forces may not be immune and the incidence of endemic disease cases may increase with a disruption of services* [*such as sanitation and garbage disposal*].)

(3) Status of immunizations. (*United States forces should receive all appropriate immunizations prior to deployment*.)

(4) Status of nutrition.

(5) Clothing and equipment. (*Includes consideration for specialized clothing and equipment* [*such as jungle fatigues, bed netting, parkas, and mountain climbing equipment*]. *When deploying to desert environments, both hot and cold weather clothing should be brought*.)

(6) Fatigue. (*The fatigue factor must be monitored since fatigue can contribute to lowering an individual's resistance to disease and may lead to combat stress reactions*.)

(7) Morale. (*It is important to the morale of a soldier that he knows that, if he is wounded, medical attention is readily available*.)

(8) Status of training. (*Includes soldier training, first-aid training, and MOS- and mission-specific training*.)

(9) Other, as appropriate. (*This can include water discipline programs or other PVNTMED measures and programs*.)

f. Assumptions. (*Assumptions may be required as a basis for initiating planning or preparing the estimate. Assumptions are modified as factual data and specific planning guidance becomes available*.)

g. Special Factors. (*Mention items of special importance in the particular operation to be supported such as the unique conditions to be encountered in NBC warfare, or the impact that patients suffering from combat stress will have on the CHS system*.)

3. COMBAT HEALTH SUPPORT ANALYSIS

a. Patient Estimates. (*Indicate rates and numbers by types of units or divisions*.)

(1) Number of patients anticipated. (*Includes all categories of patients from the supported population*.)

(Classification)

(Classification)

(2) Distribution within the AO (space). (*The dispersion of troops throughout the battlefield will affect patient densities, areas requiring augmentation or reinforcement, and the projected patient workloads*.)

(3) Distribution in time during the operation (evacuation time). (*Includes the establishment of CCPs, AXPs, BASs, and division clearing stations based on the crossing of phase lines or other predetermined events*.)

(4) Areas of patient density. (*Heaviest areas of patient density will normally be in the MBA*.)

(5) Possible MASCAL situation. (*Includes the establishment of a triage point, coordination for the use and augmentation of nonmedical vehicles to assist in transporting casualties, and establishing a decontamination station* [*augmented with nonmedical personnel to perform patient decontamination*], *if required*.)

(6) Lines of patient drift and evacuation. (*Includes those areas where terrain features canalize ambulatory wounded and injured soldiers*.)

b. Support Requirements.

(1) Medical evacuation and regulating. (*Includes assets available, limitations, and requirements for using nonmedical transportation assets; procedures for requesting a mission; procedures for conducting medical evacuation missions in radio silence conditions; and preparation of overlays or strip maps*.)

(2) Hospitalization. (*Includes requirements for a CSH in the division rear and for specialized teams*.)

(3) Combat health logistics. (*Includes blood management; supply, equipment, maintenance, and medical repair parts requirements; location of supply facility; and emergency resupply requirements, procedures, and delivery*.)

(4) Medical laboratory services. (*Includes information on organic capabilities of Echelons III and IV hospital laboratory support and supporting area medical laboratory, and how to obtain these services, if required*.)

(5) Dental services. (*Includes procedures for obtaining dental support above the organic capability*.)

(6) Veterinary services. (*Includes information on obtaining veterinary support for food inspection and animal care*.)

(Classification)

(Classification)

(7) Preventive medicine and sanitation. (*Includes PVNTMED measures and programs, support requirements for EPW, civilian, and other nonmilitary populations, unit field sanitation teams, and dining facility inspections*.)

(8) Combat stress control. (*Includes support requirements and augmentation, if required*.)

(9) Command, control, communications, computers, and intelligence. (*Includes information on attachments, OPCON, or other control means for augmentation or reinforcement; signal operating instructions; and all other C4I activities*.)

(10) Others, as appropriate. (*Includes topics such as medical regulating procedures or requirements, general supply procedures and support requirements; and nonmedical personnel required to establish a patient decontamination station*.)

c. Resources Available. (*Consider all sources available within the AO*.)

(1) Organic medical units and personnel. (*Includes US, allies, coalition, and HN forces*.)

(2) Attached medical units and personnel.

(3) Supporting medical units.

(4) Civilian public health capabilities and resources. (*Civil affairs personnel are responsible for obtaining HN support*.)

(5) Enemy prisoners of war medical personnel.

(6) Medical supplies and equipment. (*Includes other Services, allies, coalition forces, or HN capabilities*.)

(7) Medical troop ceiling.

d. Courses of Action. (*As a result of the above considerations and analysis, determine and list all logical COA that will support the tactical commander's OPLAN and accomplish the CHS mission. Consider all TSOPs, policies, and procedures in effect. Courses of action are expressed in terms of what, when, where, how, and why*.)

4. EVALUATION AND COMPARISON OF COURSES OF ACTION

a. Compare the probable outcome of each COA to determine which one offers the best chances of success. This may be done in two steps:

(Classification)

(Classification)

(1) Determine and state those anticipated difficulties or difficulty patterns which will have a different effect on the COA listed.

(2) Evaluate each COA against each significant difficulty or difficulty pattern to determine the strengths and weaknesses inherent in each.

b. Compare all COA listed in terms of significant advantages and disadvantages, or in terms of the major considerations that emerged during the above evaluation.

5. CONCLUSIONS

a. Indicate whether the mission set forth in paragraph 1 can (cannot) be supported.

b. Indicate which COA can best be supported from the CHS standpoint.

c. List the limitations and deficiencies in the preferred COA that must be brought to the commander's attention.

d. List factors adversely affecting the health of the command.

/s/_____
Command Surgeon

Annexes (*as required*)

Distribution: (*Is determined locally*.)

(Classification)

Section II. COMBAT HEALTH SUPPORT PLAN

B-5. General

Before the CHS estimate is completed, the commander (or surgeon) starts to prepare the CHS plan. As each problem is recognized and solved, a part of the plan is automatically defined. Once the estimate is completed, it defines requirements, identifies sources, and determines policies and procedures.

B-6. Format for the Combat Health Support Plan

_____
(Classification)

Copy _____ of _____ Copies
Headquarters
Location Date, Time, and Zone

References: *Maps, overlays, charts, or other documents required to understand the plan. Reference to a map includes the map series number and country or geographic area, if required; sheet number and name, if required; and edition and scale.*

Time Zone Used Throughout the Plan:_____ (*Included only if used as the initial plan, or if a major organization is to be affected*.) Task Organization: Annex A (Task Organization) (*Task organization may appear here, in paragraph 3, or in an annex*.)

1. SITUATION (*Provide information essential to understanding the plan*.)

a. Enemy Forces. (*Emphasis on capabilities bearing on the plan*.)

b. Friendly Forces. (*Emphasis on CHS functions and responsibilities for higher headquarters and adjacent units*.)

c. Attachments and Detachments. (*May be published as an annex*.)

d. Assumptions. (*Minimum required for planning purposes*.)

2. MISSION (*Statement of overall CHS mission*.)

3. EXECUTION

a. Surgeon's Concept of Support. (*First lettered subparagraph provides a concise overview of planned CHS operations*.)

b. (*The second lettered paragraph identifies the major medical control headquarters and lists the tasks/missions assigned to do*.)

c. (*The third and subsequent lettered paragraphs identify the remaining medical units in turn and list their respective tasks/missions*.)

d. (*The next to the last lettered subparagraph discusses the evacuation/holding policy by phases of the operation*.)

_____
(Classification)

(Classification)

e. Coordinating Instructions. (*The final lettered subparagraph contains any coordinating instructions that may be appropriate to ensure continuity in CHS*.)

4. SERVICE SUPPORT

a. Supply. (*Reference may be made to the TSOP or another annex if they provide sufficient information*.)

(1) General supply. (*Provide special instructions applicable to medical units, such as additional requirements for potable water for patient care*.)

(2) Medical supply. (*Provide special procedures applicable to this operation*.)

(*a*) Requirements. (*For sustaining supported forces, this includes blood management*.)

(*b*) Procurement. (*Provide detailed information on resupply and stockage levels*.)

(*c*) Storage. (*Any specific equipment requirements, such as refrigerators*.)

(*d*) Distribution. (*Includes method of distribution and any limitations and restrictions, as well as transportation requirements*.)

(3) Medical supply installations. (*Give the locations, mission, hours of opening and closing, and troops supported for each medical supply installation*. [*In the division AO, this includes the DMSO*.] *An overlay may also be used for clarity*.)

(4) Salvage of medical equipment and supplies. (*Medical equipment and supplies are afforded protection under the provisions of the Geneva Conventions and cannot be intentionally destroyed. If they cannot be taken with the force, they must be abandoned* [*refer to FM 8-10*].)

(5) Captured enemy medical supplies and equipment. (*The disposition of these supplies and equipment is also governed by the provisions of the Geneva Conventions. They can be used to treat EPW patients*.)

(6) Civilian medical supplies and equipment. (*Include availability, compatibility, and maintenance support requirements*.)

(7) Other combat health logistics matters.

b. Transportation and Movements. (*Include medical use of various transportation means*.)

(Classification)

(Classification)

(1) Ground.

(2) Air (Army air).

(3) Air (USAF).

(4) Rail.

(5) Water (inland and/or sea).

(6) Movement control and traffic regulation. (*Include designation of MEDEVAC routes and air corridors*.)

c. Services.

(1) Services to medical units and facilities. (*Include information on the following services: laundry, bath, mortuary affairs* (*MA*)*, utilities, fire fighting, construction, and real estate*.)

(2) Medical equipment maintenance. (*Include in separate subparagraphs the location, mission, and hours of operation for medical maintenance and/or optical repair teams, unless included as attachments to health service logistics units*.)

(3) Labor. (*Include policies on the use of civilian or other personnel for labor. Comply with existing agreements, arrangements, or policies*.)

(4) General maintenance. (*Include priority of maintenance, location of facilities, and collecting points*.)

5. MEDICAL EVACUATION, TREATMENT, AND OTHER HEALTH SERVICES

a. Medical Evacuation.

(1) Evacuation requirements for Army, Navy, USAF, allied and coalition forces, allied civilian, and refugees, detainees, and EPW. (*Guards for EPW are nonmedical personnel selected by the echelon commander*.)

(2) Requirements. (*List requirements, including percentage evacuated by air or sea transportation means*.)

(Classification)

(Classification)

(3) Units. (*Give location, mission, and attachment of evacuation elements, such as forward-sited corps ground ambulances or forward-sited air ambulances*.)

b. Treatment.

(1) Policies. (*State treatment policies to include civilians, refugees, and EPW*.)

(2) Units. (*Give the location and the establishing and disestablishing date and time* [*opening and closing*] *at new or old location for all. Each MTF, a division, separate brigade, or an ACR regimental clearing station should be listed in a separate paragraph*.)

c. Other Health Services. (*Include the provision of the remaining CHS functions: laboratory services, dental services, PVNTMED and sanitation, CSC, veterinary services, and required C4I*.)

6. MISCELLANEOUS. (*Address areas of support not previously mentioned which may be required or needed for the execution of the CHS mission, such as CP locations, signal operation instructions* [*SOI*], *medical intelligence, and international or HN support agreements affecting the delivery of CHS*.)

/s/_____
(Commander/Command Surgeon)

Appendixes (*as required*)

Distribution: (*Is determined locally*.)

(Classification)

APPENDIX C

MASS CASUALTY SITUATIONS

C-1. General

a. Mass casualty situations occur when the number of casualties exceeds the available medical capability to rapidly treat and evacuate them. Therefore, the actual number of casualties required before a MASCAL situation is declared varies from situation to situation depending upon the availability of CHS resources. Technically, a MASCAL situation occurs if a combat medic has more than one seriously injured soldier to be cared for at one time. A MASCAL situation could occur from incidences such as an ambush of a platoon where 18 soldiers are wounded, an accident involving a troop carrier where 30 soldiers are hurt, or the use of WMD where hundreds of soldiers are injured. To take this one step further, if the troop carrier accident occurs in the CZ in the vicinity of the medical company, a MASCAL situation has occurred (as this number of casualties would overwhelm the resources of the medical company). However, if the same accident occurred in the COMMZ or corps area in the vicinity of a CSH and an ASMC, the patients could be sent to several MTFs for treatment (MINIMAL to the ASMC; DELAYED, IMMEDIATE, and EXPECTANT to several supporting CSHs). By having the medical resources of multiple MTFs available, the impact of the MASCAL situation is effectively reduced.

b. This appendix provides a detailed description of how to establish a MASCAL station. Due to the complexity of the MASCAL station and the number of personnel involved, the entire station may not be able to be set up at the medical company level. The CHS planner should, therefore, modify the station based on the specific unit's needs.

c. This station is not practical at the BAS level. When faced with a MASCAL situation at the BAS level, the important aspects for the management of the situation are establishing control, organizing activities, and effectively sorting patients. Effective sorting will enhance the physician's ability to maximize the use of his time and resources on those patients who would receive the most benefit from the intervention.

C-2. Mass Casualty Management

Mass casualty situations are normally chaotic and may include—

- Casualties in various stages of pain and distress.
- Casualties who may have single wounds, multiple wounds, or wounds from combined sources, such as thermal and blast injuries in a nuclear detonation.
- Medical conditions that vary from relatively minor injuries to severe, life-threatening trauma.
- New casualties arriving before the patients already on hand are treated.
- Personnel who are just dazed and wandering throughout the area disrupting operations.
- Uninjured personnel looking for a buddy, or when civilian casualties are being treated, relatives looking for a loved one, which also adversely impacts on the control of the situation.

a. *Planning*. To ensure efficient management of MASCAL situations, the CHS planner must develop an effective plan and then rehearse it on a periodic schedule.

(1) In MASCAL situations, medical resources are scarce. The plan, therefore, must be comprehensive and efficiently use what medical resources are available.

(2) Planning considerations include—

- Establishing a control element to coordinate ongoing activities and release information updates.
- Securing the area and limiting access to nonessential personnel.
- Establishing communications between areas and to higher headquarters, if possible.
- Establishing the triage, treatment, and holding areas.
- Establishing a traffic pattern which provides for the smooth flow of patients and vehicles.
- Marking routes to the different areas.
- Orienting all personnel (medical and nonmedical) operating the MASCAL station to the types of markings used, layout, and routes to be followed during the MASCAL operation.
- Organizing medical personnel for staffing of the different areas.
- Organizing nonmedical personnel for litter bearer duties, messengers, restocking supplies, and other nonmedical functions.
- Ensuring an adequate blood supply and/or other Class VIII items are available or on order.
- Providing timely evacuation.

b. *Rehearsal and Training*.

(1) The response to a MASCAL situation must be rehearsed. By conducting rehearsals, unit personnel become familiar with where they should report and with what their duties should entail.

(2) Nonmedical personnel assigned to the unit should be trained in the proper techniques for loading, carrying, and unloading litters. This training will enhance their ability to perform the task by reducing fatigue and risk of injury for transporting patients incorrectly. (Refer to FM 8-10-6 for additional information.)

C-3. Triage Categories

Triage is the medical sorting of patients according to the type and seriousness of the injury, likelihood of survival, and the establishment of priorities for treatment and evacuation. Triage ensures that medical resources are used to provide care for the greatest benefit to the largest number of casualties.

a. *Triage of Conventional Wounds and Injuries*.

(1) Triage (or sorting) is the process of prioritizing or rank ordering wounded soldiers on the basis of their individual needs for surgical intervention. The likely outcome of the individual casualty must be factored into the decision process prior to the commitment of limited medical resources. Casualties are generally sorted into four categories (or priorities). These priority groupings are discussed in decreasing order of surgical urgency.

(2) The four triage categories of conventional injuries are—

(*a*) *IMMEDIATE*. This category is for the patient whose condition demands immediate, resuscitative treatment. An example of this treatment is the control of hemorrhage from an extremity. Generally, the procedures used are short in duration and economical in terms of medical resources. (Approximately 20 percent of the casualties are normally in this category.)

(*b*) *DELAYED*. Casualties in the delayed category can tolerate delay prior to operative intervention without unduly compromising the likelihood of a successful outcome. When medical resources are overwhelmed, soldiers in this category are held until the IMMEDIATE cases are cared for. (Approximately 20 percent of the casualties are normally in this category.) An example of this category is stable abdominal wounds with probable visceral injury, but no significant hemorrhage. These cases may go unoperated for 8 to 10 hours, after which there is a direct relationship between time lapsed and the advent of complications. Other examples include—

- Soft tissue wounds requiring debridement.
- Maxillofacial wounds without airway compromise.
- Vascular injuries with adequate collateral circulation.
- Genitourinary tract disruption.
- Fractures requiring operative manipulation, debridement and external fixation.
- Eye and central nervous system injuries.

(*c*) *MINIMAL* (*OR AMBULATORY*). This category is comprised of casualties with wounds that are so superficial that they require no more than cleansing, minimal debridement under local anesthesia, administration of tetanus toxoid, and first-aid type dressings. They must be rapidly directed away from the triage area to uncongested areas where first aid and nonspecialty medical personnel are

available. (Approximately 40 percent of the casualties are in this category and most of them are ambulatory.) An example is burns of less than 15 percent total body surface area (TBSA), with the exception of those involving the face, hands, and genitalia. Other examples include—

- Upper extremity fractures.
- Sprains.
- Abrasions.
- Behavioral disorders or other obvious psychiatric disturbances.

(*d*) *EXPECTANT*. Casualties in the expectant category have wounds that are so extensive that even if they were the sole casualty and had the benefit of optimal medical resources application, their survival would be very unlikely. During a MASCAL situation, this type of casualty would require an unjustifiable expenditure of limited resources that are more wisely applied to several other more salvageable soldiers. The EXPECTANT casualties should be separated from the view of other casualties; however, they should not be abandoned. Above all, one attempts to make them comfortable by whatever means necessary and to provide attendance by a minimal, but competent staff. (Approximately 20 percent of the casualties are normally in this category.) Examples of this category include—

- Unresponsive patients with penetrating head wounds.
- High spinal cord injuries.
- Mutilating explosive wounds involving multiple anatomical sites and organs.
- Second- and third-degree burns in excess of 60 percent TBSA.
- Profound shock with multiple injuries.
- Agonal respiration.

b. *Triage of Nuclear Generated Patients*. There are four triage categories for patients generated in a nuclear detonation. These categories are—Immediate Treatment Group (T1); Delayed Treatment Group (T2); Minimal Treatment Group (T3); and Expectant Treatment Group (T4).

c. *Triage of Neuropsychiatric Casualties*. These casualties are usually triaged as MINIMAL and should be quickly separated from the wounded patients. Within the MH discipline, the triage categories for psychiatric disorders are contained in FM 8-51.

C-4. Control Element

a. The MTF commander designates the individuals who will staff the control element. This element is responsible for—

- Implementing the plan.

- Establishing security.
- Limiting access to the area.
- Monitoring ongoing activities.
- Coordinating medical resource augmentation.
- Providing informational updates as required.

b. Communications with the triage, treatment, and holding areas are essential to accomplish the coordination and control of ongoing activities. If telephone/radio communications are not available, a messenger system is employed using some of the nonmedical personnel for this function.

C-5. Establishing Triage, Treatment, and Holding Areas

Depending on the tactical situation or the location of the MASCAL, the triage, treatment, and holding areas may be established in the existing MTF, an available shelter, or outdoors.

a. *Using the Existing Medical Treatment Facility*.

(1) When the existing MTF is used, the triage area should afford easy access for incoming litter bearer teams, ground and air ambulances, and nonmedical transportation assets. Sufficient space must be allocated for ambulance turnaround to ensure a smooth traffic flow. These requirements are normally met with the established layout of the MTF; however, depending upon the number of casualties being received, additional space may be required to accommodate the patient flow. Litter stands should be established (such as sawhorses supporting litters) for placing patients to be triaged. At a minimum two should be established with the triage officer between the stations. Resuscitation and vascular volume replacement are initiated in the triage area, if required. The flow of wounded into the triage area must be controlled. An increase in the noise level and confusion can result if too many casualties are brought into the triage area at one time. These factors can adversely impact on the ability of the medical personnel to thoroughly evaluate and prioritize each casualty.

(2) Specific areas within the MTF are designated for each of the triage categories, personnel pools, and control elements. Additionally, internal traffic routes to the x-ray area, the laboratory area, and the preoperative, recovery, and holding areas (if augmented by a surgical detachment or if the MTF has an organic surgical squad) must be identified. Surgical procedures are limited to those required to save life and stabilize nontransportable patients for evacuation.

- Ideally, holding areas for each of the four triage categories should be established. Each area should be clearly identified and the route to that area marked. Marking can be accomplished with the use of different color panels or a numbering system. Each area can be designated as a specific color or number and the route to that area marked accordingly. The marking system used should function during times of good visibility as well as times of limited visibility (such as at night or during blackout conditions).

(Materials used for marking purposes should be prepared when the MASCAL plan is developed and stored until required for use.)

- Two personnel pool areas should be designated—one for medical personnel and one for nonmedical personnel. The MTF commander should designate those individuals who will supervise the management of these pools. As unit personnel complete tasks, shifts, or other duties, they report back to the appropriate personnel pool area. Using this system ensures the efficient use of available resources and permits the reallocation of resources as requirements change. The MINIMAL category of patients can be used as an additional manpower pool while awaiting transportation back to their units. They, with minimal training or briefing, can act as runners, litter bearers, or guides to free up medical personnel so they can attend to medical tasks.

- The control element should have access to all areas as required.

- The internal communications system should be modified as required to provide communications capability to the major areas within the facility; if a communications systems does not exist, a messenger system is established.

b. *Using an Available Structure*. A MASCAL situation may occur in an area away from the MTF. It may not be practical or possible to evacuate or transport the casualties to the MTF location. If a structure not previously used for an MTF is available, it may be used. The requirements for the establishment of the area are the same as when an existing MTF is used; however, the actual layout will differ depending on the structure used. Caution must be used to develop a traffic pattern that will avoid congestion and the crisscrossing of internal paths and will expedite patient flow.

c. *Establishing the Mass Casualty Station Outdoors*. In some instances, a MASCAL station may be required to be established outdoors. When this occurs, efficient use of overhead cover and available shade is essential. Unless inclement weather occurs, the triage area and the MINIMAL treatment area remain outdoors. The triage area must be accessible to incoming vehicles and provide sufficient space for the turnaround of the vehicles. It should also not be established too far away from the treatment areas, as the distance will place an additional burden on the litter bearers. Once triaged, patients should be brought inside an improvised shelter as soon as possible. The use of improvised shelters or the use of cover (such as caves) may be required until more appropriate shelters can be obtained or established.

C-6. Patient Accountability

During MASCAL situations, medical personnel do not have time to fully complete the FMC with the required patient identification information. A numbering system can be used to expedite the process. The patient can be identified by a number and this same number is then entered on his FMC. The FMC is attached to the individual's clothing. The FMC is used to record the treatment and medications that the patient receives. When the MASCAL situation begins to resolve, and as time permits, medical personnel obtain the necessary information to complete the FMC.

C-7. Medical Evacuation

When MASCAL situations occur, the number of casualties will normally overwhelm the available medical evacuation assets. Therefore, the MASCAL plan should include provisions for the use of nonmedical vehicles and aircraft. When at all possible, casualties who have sustained more severe wounds should be evacuated in medical ground and air ambulances. These soldiers will benefit most from the provision of en route medical care. The lightly wounded and stable casualties and those suffering from BF can be transported by nonmedical transportation assets without serious risk of worsening their medical prognosis.

C-8. Contaminated Patients

Initial triage, EMT, and decontamination are accomplished on the dirty side of the hot line. Life-sustaining care is rendered, as required, without regard to NBC contamination. Secondary triage, ATM, and patient disposition are accomplished on the clean side of the hot line. When treatment must be provided in a contaminated environment, outside of the chemical-biological protective shelter, the level of care may be reduced to first-aid procedures because the care providers and patients are at MOPP Level 4.

C-9. Disposition of Remains

In a MASCAL situation, there will be casualties who have died before reaching the triage area (dead on arrival [DOA]) or who die of wounds before they can be stabilized and further evacuated. A temporary morgue area should be established away from and out of sight of the triage and treatment areas. (This morgue area is for use only by the MTF for those patients who have died. It is not a temporary collecting point for deceased personnel from other units.) This area could be established behind a natural barrier, such as a stand of trees, or it can be set off by using tentage or tarpaulins. This area is not an actual morgue, as it has neither the required equipment nor is it staffed; it is only a holding area. The FMC must be completed on each of the deceased personnel, and it must be signed by a physician. The remains are held until MA support can be obtained.

APPENDIX D

MANAGEMENT OF CLASS VIII ITEMS IN THE FORCE XXI DIVISION

D-1. Class VIII Supply Management

a. Class VIII supply management in the Army's Force XXI division is accomplished by medical units/elements through the use of a functional business system called MC4 system/Theater Medical Information Program (TMIP). Currently, the functional business system for Class VIII wholesale/retail item management at echelons above division is the Theater Army Medical Management Information System (TAMMIS). This system's logistics modules will be replaced in the future by TMIP. The MC4/TMIP is currently being evaluated and tested and is scheduled for fielding to division and corps medical units/ elements. The system provides division and corps medical units/elements with a direct link with the supporting MEDLOG battalion's units. The health service material officer (HSMO) of the DSS and the medical materiel management branch (MMMB) of the DISCOM distribution management center coordinates Class VIII resupply for division medical units/elements. Each medical unit maintains its own basic load of 5 days of medical supplies. The MEDLOG battalion normally assigns one MEDLOG company in DS of each division. Once established, it provides Class VIII resupply for the division and corps medical elements operating in the division AO.

NOTE

The provisions of this appendix are also applicable to AOE divisional medical units when MC4/TMIP and other appropriate electronic systems become available.

b. During deployment, lodgment, and early buildup phases, medical units operate from planned, prescribed loads and from existing pre-positioned war reserve stockpiles identified in applicable contingency plans.

c. During the initial employment phase, each FSMC will receive a preconfigured medical resupply push-package every 48 hours from pre-positioned stock or the CONUS sustainment base. Preconfigured medical resupply push-packages will continue until appropriate units of the corps MEDLOG battalion are established.

d. Initial resupply efforts may consist of preconfigured medical supply packages tailored to meet specific mission requirements. Preconfigured push-packages will normally be shipped directly to the DSMC and FSMCs until replenishment line item requisitioning is established with the supporting MEDLOG company. During this time, medical company treatment and ambulance teams deployed with maneuver or other division elements are resupplied from their supporting medical company. Maneuver battalion medical platoons/BASs will receive standard push-packages every 12 to 24 hours. Contents of push-packages can be adjusted as the battle changes. Line item requisitioning will be by exception only during this time. While resupply by preconfigured packages is intended to provide support during the initial phase, continuation on an exception basis may be dictated by operational needs. Planning for such a contingency must be directly

coordinated with the DSS. Other than line item requisitioning from the FSMCs and DSMC, the HSMO of the DSS will coordinate all Class VIII requirements for the division with the supporting MEDLOG battalion and/or MEDLOG company, as appropriate.

e. Divisional medical elements use MC4/TMIP to requisition Class VIII items. Users of this system in the division include maneuver battalion medical platoons, FSMCs, the DSMC, and the DSS HSMO. The MC4/TMIP system is the primary source for Class VIII line item requisitions from the FSMCs and DSMC. Forward support medical companies and the DSMC request Class VIII resupply from the corps MEDLOG company in DS of a division.

D-2. Throughput Delivery of Class VIII Items

Delivery of throughput Class VIII items to the requesting medical units in the division is accomplished by logistical packages (LOGPACs) and nonmedical transports. Shipment of these Class VIII LOGPACs from the MEDLOG company is coordinated with the corps support battalion and the corps movement control officer (MCO). The management and in-transit visibility of Class VIII item delivery is accomplished through document number and transportation number tracking. The systems that work together to provide this management and coordination are TAMMIS, Transportation Coordinators' Automated Information for Movement System (TC-AIMS), Movement Tracking System (MTS), and global traffic network (GTN). These systems are located in the MEDLOG company and the DISCOM MMMB. In some cases, delivery of medical materiel into the division AO may also be achieved through use of the directed Class VIII resupply using medical evacuation resources that are returning to the division medical units. From the FSMCs, delivery of Class VIII items to maneuver battalion medical platoons via LOGPACs or nonmedical transports is coordinated by the FSMC with the FSB support operations section. For directed Class VIII resupply, air and ground ambulance backhaul may be used. Immediate Class VIII resupply will be processed for shipment by the most expedient means available. Based on casualty estimates, medical push-packages may be pre-positioned with maneuver battalion medical platoons or with the FSMC. Figure D-1 provides an overview of Class VIII requisitions and resupply flow at Echelon I. Figure D-2 provides an overview of Class VIII requisitions and resupply flow at Echelon II.

D-3. Additional Combat Health Logistics Support Information

For detailed information on the transmission of Class VIII supply requisitions and blood support for Force XXI divisions refer to FM 4-02.1.

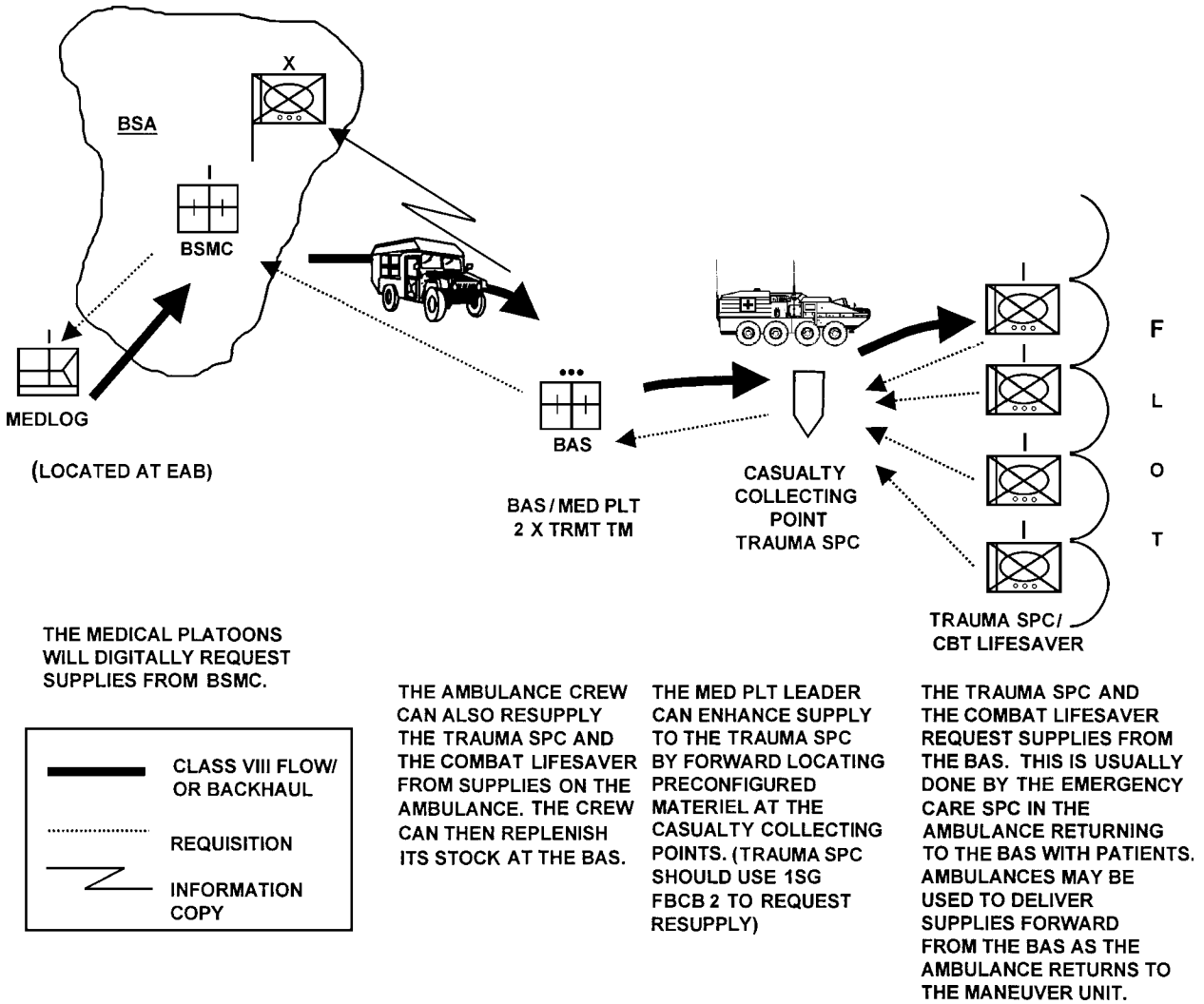

Figure D-1. Overview of Class VIII requisition and resupply flow at Echelon I.

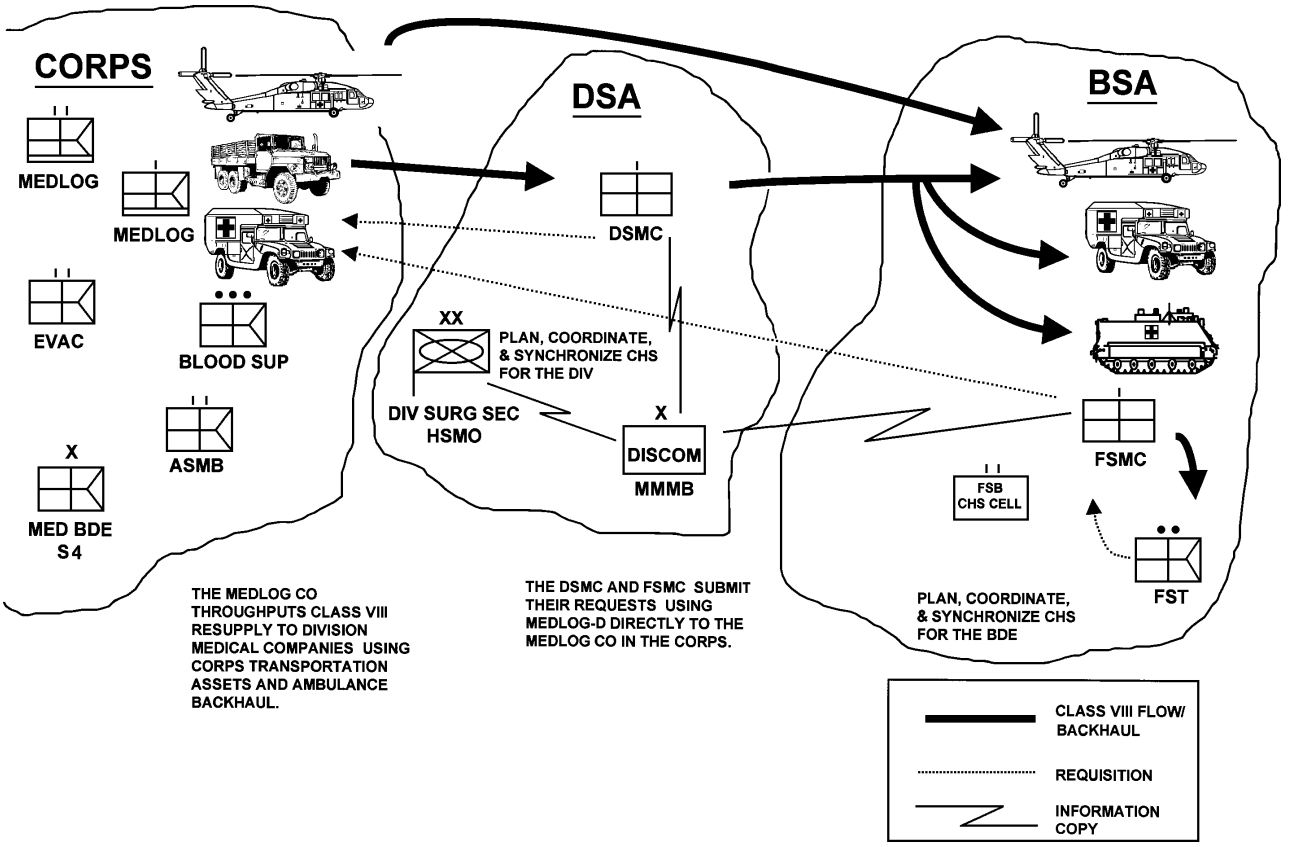

Figure D-2. Overview of Class VIII requisition and resupply flow at Echelon II.

APPENDIX E

RECORDS AND REPORTS

Section I. PATIENT ACCOUNTABILITY

E-1. General

a. Individuals entering the medical treatment chain must be accounted for at all times. Prompt reporting of patients and their health status to the next higher headquarters is necessary for the maintenance of a responsive personnel replacement system and the Army Casualty System. Patient accountability and status reporting is required to—

- Provide the commander with an accurate account of personnel losses due to medical causes (enemy action and related battlefield losses and DNBI).
- Verify personnel replacement requirements.
- Assist the command surgeon in the preparation of the CHS estimate and plan.
- Alert PVNTMED personnel to the medical threat in a given AO.

b. Patient accountability and status reporting in the AOE division is depicted graphically in Figure E-1.

This paragraph implements STANAG 2132 and QSTAG 470.

E-2. United States Field Medical Card

a. The FMC (DD Form 1380) is used to record data similar to that recorded on the inpatient treatment record cover sheet and Standard Form (SF) 600, Chronological Record of Medical Care. The FMC is used by BASs, clearing stations, and nonfixed troop or health clinics working overseas, on maneuvers, or attached to commands moving between stations. It may also be used to record an outpatient visit when the health record is not readily available at an MTF. The FMC is used in the TO during times of hostilities. It also may be used to record carded for record only cases.

b. The FMC is made so that it can be attached to a casualty. The cards are issued as a book, with each card set consisting of an original card and a pressure sensitive paper duplicate.

c. Medical treatment facilities initiating the SF 600, having received a patient with an initiated DD Form 1380, will attach this form to the SF 600 to remain as a permanent record of the patient (Appendix K).

d. For additional information on the preparation and use of this card, refer to AR 40-66 and FM 8-10-6.

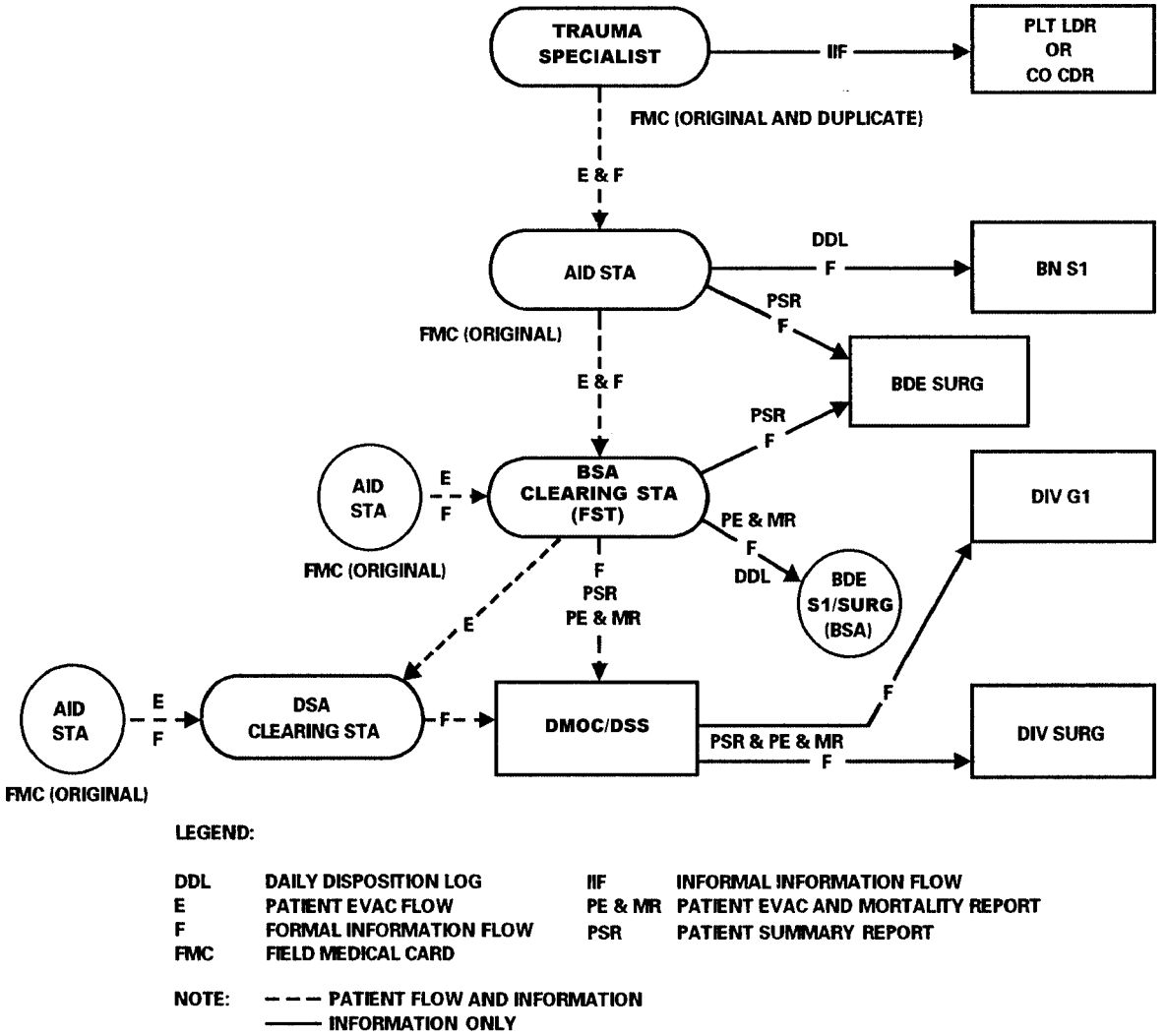

Figure E-1. Patient accountability and status reporting in the AOE division.

E-3. Daily Disposition Log

a. The Daily Disposition Log (DDL) (Figure E-2) is maintained by Echelons II MTFs. The information from this log is extracted, when required, and provided to the S1, (Adjutant [US Army]) or supported unit requesting the information. The DDL is also the primary source document for information needed in the preparation of the Casualty Feeder Report (DA Forms 1155/1156), Patient Summary Report (PSR), and the Patient Evacuation and Mortality Report (PE&MR).

b. The DDL does not lend itself to transmission. However, the information may be extracted and provided via courier or electronic means to agencies responsible for preparing consolidated reports and/or casualty feeder reports.

DAILY DISPOSITION LOG

DTG:

NAME	GRADE	SSN	UNIT/NATION	INJURY/ILLNESS STATUS	DISPOSITION TIME
SHAW, L.	03	000000000	A TRP RECON	GSW, L-LEG/WIA	CLR-0900Z
HERRERA, C.	E4	000000000	C3, 6 INF/US	SICK/MIGRAINE/ DIS	RTD-1400Z
JONES, C.J.	E6	000000000	A1, 6 INF/US	LACERATION-L HAND/NBI	CLR-1200Z
EPW (UNKNOWN)			EPW	FRAG WOUND OF HEAD/DOA/KIA	MA-1220Z
IVANOVICH, N.	04	000000000	EPW	SW R-ARM/WIA	MP/BDE SCTY ELEM-1400Z
FLOWERS, R.C.	E8	000000000	B TRP RECON SQDN/US	BF/DNBI	CLR-1640Z
CONRAD, W.	E5	000000000	6 PANZER/GE	BURN, 3D DEGREE CHEST/ABDOMEN/WIA	CLR-1400Z
DECK, H.	02	000000000	C BTRY, 3 FA/US	PUNCTURE WOUND R-ANKLE/WIA	CLR-1400Z
HASLEY, B.	E1	000000000	B TRP RECON SQDN/US	CHEMICAL INJ SYSTEMIC/WIA	15TH CSH-1705Z
WATSON, WM. T.	E3	000000000	B TRP RECON SQDN/US	DE INJ BOTH EYES	15TH CSH-1815Z
FISHER, T.T.	E7	000000000	A TRP RECON SQDN/US	UNCONTROLLED VOMITING-BW/WIA	CLR-1900Z

NOTE: THIS LOG, IN THE ABOVE FORMAT, IS MAINTAINED BY ALL DIVISIONAL TREATMENT FACILITIES. IT DOES NOT LEND ITSELF FOR TRANSMISSION. HOWEVER, THE INFORMATION MAY BE EXTRACTED AND PROVIDED TO AGENCIES RESPONSIBLE FOR PREPARING THE CONSOLIDATED FEEDER REPORT.

LEGEND:

BDE	BRIGADE	DTG	DATE-TIME GROUP	L	LEFT
BF	BATTLE FATIGUE	ELEM	ELEMENT	MA	MORTUARY AFFAIRS
BW	BIOLOGICAL WARFARE	FA	FIELD ARTILLERY	MP	MILITARY POLICE
CLR	CLEARING (STATION)	FRAG	FRAGMENTATION (WOUND)	NBI	NONBATTLE INJURY
DE	DIRECTED ENERGY	GE	GERMAN	R	RIGHT
DIS	DISEASE	GSW	GUN SHOT WOUND	RECON	RECONNAISSANCE
DNBI	DISEASE AND NONBATTLE INJURY (PURPLE HEART NOT AUTHORIZED)	INF	INFANTRY	SCTY	SECURITY
		INJ	INJURY	SQDN	SQUADRON
		KIA	KILLED IN ACTION (PURPLE HEART AUTHORIZED)	TRP	TROOP
DOA	DEAD ON ARRIVAL			US	UNITED STATES
				WIA	WOUNDED IN ACTION (PURPLE HEART AUTHORIZED)

Figure E-2. Example Daily Disposition Log.

E-4. Patient Summary Report

The PSR is a weekly report (Figure E-3), compiled as of 2400 hours, Sunday. It is prepared by Echelons I and II MTFs and is submitted to respective surgeons as shown in Figure E-1, usually on each following Monday. The command surgeon can, however, dictate the frequency of submission to meet command requirements.

SAMPLE FORMAT

PATIENT SUMMARY REPORT

DTG: _____

(FROM) / (TO)

		WIA	NBI	DISEASE	*NP	TOTAL
PATIENTS						
ALPHA	US	_____	_____	_____	_____	_____
BRAVO	ALLIED	_____	_____	_____	_____	_____
CHARLIE	EPW	_____	_____	_____	_____	_____
DISPOSITION TOTALS						
DELTA	RETURNED TO DUTY			_____		
ECHO	EVACUATED BY AIR			_____		
FOXTROT	EVACUATED BY GROUND			_____		
GOLF	EXPIRED EN ROUTE			_____		
HOTEL	EXPIRED IN MTF			_____		

NOTE: THIS REPORT, WHEN COMPLETED, WILL BE CLASSIFIED IN ACCORDANCE WITH LOCAL COMMAND POLICY—ENCODE/ENCRYPT FOR TRANSMISSION.

*NEUROPSYCHIATRIC OF STRESS-RELATED PATIENTS SHOULD BE RECORDED IN THIS.

Figure E-3. Example Patient Summary Report.

E-5. Patient Evacuation and Mortality Report

The PE&MR (Figure E-4) is prepared by Echelons I and II MTFs. It is disseminated as shown in Figure E-1. The PE&MR primarily serves as a medical spot report. The frequency of this report is established by the command surgeon.

SAMPLE FORMAT

PATIENT EVACUATION AND MORTALITY REPORT

DATE TIME GROUP (DTG): _____

(FROM) / (TO)

ALPHA (EVACUATED)

NAME	GRADE	SSN	*UNIT/NATION	TENTATIVE DIAGNOSIS	DESTINATION DTG
WILSON, V.C.	03	000000000	A TRP RECON SQDN/US	MULTIPLE GSWs ABDOMEN AND L-THIGH	15TH CSH/ 251015Z MAR 86
BANNON, E.J.	05	000000000	HHC, CAB 7ID/US	FOUO	15TH CSH/ 251215Z MAR 86
THOMPSON, R.L.	05	000000000	HHC, 3D BN 6 INF/US	ACUTE MYO-CARDIAL INFARCTION	15TH CSH/ 251535Z MAR 86

BRAVO (EXPIRED)

NAME	GRADE	SSN	UNIT/NATION	CAUSE OF DEATH	DTG
WILLIAM, W.R.	E3	000000000	B TRP RECON SQDN/US	BURN, THERMO, 3D DEGREE 26 PERCENT	251415Z MAR 86
MAGSAYSAY, M.			EPW	FRAG WOUND OF HEAD	251600Z MAR 86
COMRAD, W.F.	E5	000000000	6 PANZER/GE	RADIATION BURN/MULTIPLE GSWs-SEVERE TRAUMA	251805Z MAR 86

NOTES:

1. THIS IS A BY-NAME REPORT WHICH INCLUDES TWO CATEGORIES OF INFORMATION: THE NAME, GRADE, SSN, UNIT, DIAGNOSIS, AND DESTINATION AND DATE-TIME- GROUP OF PATIENTS EVACUATED (ALPHA); AND THE NAME, GRADE, SSN, UNIT AND CAUSE OF DEATH OF PATIENTS WHO EITHER DIED EN ROUTE, OR WHILE AT A REPORTING MTF (BRAVO).

2. THIS REPORT, WHEN COMPLETED, WILL BE CLASSIFIED IN ACCORDANCE WITH LOCAL COMMAND POLICY—ENCODE/ ENCRYPT FOR TRANSMISSION.

*UNIT/NATION FOR ENEMY PRISONER OF WAR WILL BE LISTED AS "EPW."

Figure E-4. Example Patient Evacuation and Mortality Report.

Section II. BLOOD MANAGEMENT REPORT

E-6. General

This section provides a format for the required report for requesting blood support. Echelon II MTFs may only request Group O red blood cells. The report in this appendix, therefore, only discusses this limited support. For additional information on the complete blood report submitted by Echelons III and IV MTFs, refer to Joint Publication 4-02.1.

E-7. Blood Management Report

Depending on the tactical situation and the command policy, the blood management report may be transmitted by voice or written means (transmitted electronic message, telephonically, or by courier). A sample written message format is contained in Figure E-5. A sample voice message format is contained in Figure E-6.

FM: MEDICAL TREATMENT ELEMENT	
TO: BLOOD SUPPLIER	
INFO: AS DETERMINED BY COMMAND OPLAN	
CLAS	
OPERATIONAL DESIGNATOR	
MSGID/BLDREP/___FSMC/151215ZJUN92//	
ASOFDTG/160430ZJUN92	(LINE 1)
REPUNIT/___FSMC/H//	(LINES 2 AND 3)
BLDINV/5 JS//	(LINE 9)
BLDREQ/7JS//	(LINE 10)
BLDEXP/2JS//	(LINE 11)
BLDEST/15JS//	(LINE 12)
CLOSE TEXT/RECEIVED 6JS/TRANSFUSED 4JS/SHIPPED 0//	(LINE 13)

Report Explanation:

Line 1:	The blood report is as of 1215Z, 15 Jun 92.
Lines 2 and 3:	The reporting unit is the ___FSMC, code H (medical treatment element).
Line 9:	The ending inventory of blood on hand is 5 units of type O red blood cells (Brevity codes: J-Red blood cells; S-Random type O.
Line 10:	Quantity of blood requested: 7 units type O red blood cells.
Line 11:	Quantity of blood expired: 2 units type O red blood cells.
Line 12:	Estimated blood requirements for the next 7 days.
Line 13:	Narrative such as refrigerator needs repair or 6 units of type O red blood cells were received within the past 24 hours; 4 units of type O red blood cells were transfused; and no units were shipped.

Figure E-5. Sample written format for blood report.

LINE 1	151215Z
LINE 2	___ FSMC
LINE 3	H
LINE 9	5 JS
LINE 10	7 JS
LINE 11	2 JS
LINE 12	15 JS
LINE 13	REFRIGERATOR NEEDS REPAIR
LINE 14	
LINE 15	(AUTHENTICATION IN ACCORDANCE WITH SOI)

Report Explanation:

Line 1:	As of DTG (day, time, zone) of the blood shipment.
Line 2:	Reporting unit's name or designator code.
Line 3:	Reporting unit's activity brevity code letter.
Line 9:	The ending inventory of blood on hand is 5 units of type O red blood cells (Brevity codes: J-Red blood cells; S-Random type O.
Line 10:	Quantity of blood requested: 7 units type O red blood cells.
Line 11:	Quantity of blood expired: 2 units type O red blood cells.
Line 12:	Estimated blood requirements for the next 7 days.
Line 13:	Narrative such as refrigerator needs repair or 6 units of type O red blood cells were received within the past 24 hours; 4 units of type O red blood cells were transfused; and no units were shipped.
Line 14:	Message hour, minute, zone.
Line 15:	Authentication, if required.

Figure E-6. Sample voice message format.

APPENDIX F

THE BRIGADE SUPPORT MEDICAL COMPANY

Section I. ORGANIZATION AND MISSION

F-1. Organization Capability and Functions

a. The BSMC, TOE 084108F300, is assigned to the BSB of the IBCT and its overall mission is to provide Echelon II CHS to all IBCT units operating within the brigade AO. The company also provides Echelon I CHS on an area basis to all IBCT units that do not have organic medical assets. The company provides C2 for its organic elements and OPCON of medical augmentation elements. The BSMC locates and establishes its company headquarters and a brigade clearing station/MTF in the BSA. The BSMC will normally be augmented with a surgical capability provided by a FST.

b. The BSMC is organized (Figure F-1) into a company headquarters, a PVNTMED section, a MH section, a treatment platoon, and an evacuation platoon. The company performs the following functions:

- Emergency medical treatment and ATM for wounded, and DNBI patients.
- Sick call services.
- Ground ambulance evacuation from supported units.
- Operational dental treatment that includes emergency and essential dental care.
- Class VIII resupply and medical equipment maintenance support.
- Limited medical laboratory and radiology services.
- Outpatient consultation services for patients referred from Echelon I MTFs.
- Patient holding for up to 20 patients.
- Reinforcement/regeneration of maneuver battalion medical platoons.
- Preventive medicine consultation and support.
- Combat and operational stress control support.
- Mass casualty triage and management.
- Patient decontamination (see FM 8-10-7).

c. The BSMC is dependent on—

- Appropriate elements of the IBCT for legal, finance, and personnel and administrative services.

- The headquarters and distribution company (TOE 43106F0), BSB for food service support and religious support.

- The brigade support company (TOE 43107F300), BSB for unit maintenance support.

- The FST (TOE 08518LA0) for surgical support as an early entry element into the AO.

- A MEDLOG activity that could be either Joint CONUS-based (United States Army Medical Supply Agency) or a corps MEDLOG company (TOE 08488A0), MEDLOG battalion (corps) for optometry, medical resupply, and medical equipment maintenance and repair.

- Either a Joint or Army blood support detachment (TOE 08489A0), MEDLOG battalion for blood support.

- The MDT (TOE 085390AA0), or a subelement thereof, for reach-back telemedicine/ teleconsultation capabilities to national assets in CONUS or sustaining base.

- The forward support medical evacuation team (FSMT) from the medical company air ambulance (UH 60) (TOE 08447L20) for timely aeromedical evacuation within the IBCT AO.

- An air evacuation liaison team (AELT) and a mobile aeromedical staging facility for providing medical evacuation support from the AO.

- Onshore- or offshore-based hospitalization support for the IBCT soldiers.

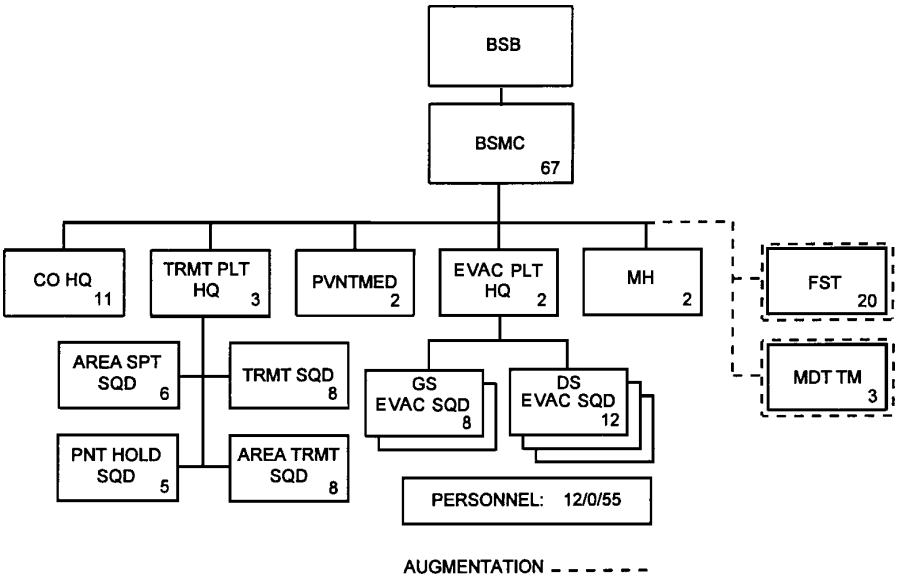

Figure F-1. Brigade support medical company, brigade support battalion.

F-2. Augmentation

a. It is essential that the BSMC be augmented with a FST as part of the early entry medical support for the IBCT, especially if it is a forced entry. When the BSMC is augmented with a corps FST (TOE 08518LA0), the BSMC commander will insure that the unit is provided the following support:

- Limited clinical laboratory and radiology services.
- Electrical power generation.
- Patients administration and arrangement for medical evacuation.
- Patient holding when required.

b. Based on METT-TC and the dispersion of IBCT units, conditions and availability of trafficable road networks within the AO, medical evacuation by air ambulance will be the preferred method for evacuating patients. Therefore, it is essential that an FSMT augment the BSMC medical evacuation capabilities during early entry or as part of early follow-on support elements. Reach-back capabilities provided by the MDT will link the BSMC with the sustaining base. This reach-back capability is invaluable for medical consultation/telementoring and coordination for CHS requirements. Other CHS augmentation support, such as the Theater Army Medical Laboratory, PVNTMED, and veterinary support, will be METT-TC-dependent and requested as required. Essential support to the BSMC must include proximate Echelon III hospitalization, a 44-bed early entry module of an 84-bed CSH or an offshore naval hospital afloat can provide this capability. Echelon III-level support may also be provided by USAF hospitalization capability, HN, and allied and/or coalition forces.

c. Upon arrival and subsequent breakup of the combat service support company's (TOE 63591FA) command section, the treatment team of this unit will be assigned to augment the BMSC. This PA-led high mobility multipurpose wheeled vehicle (HMMWV)-based treatment team will be placed OPCON to the BSMC treatment platoon. It will be employed in direct support of IBCT CS/CSS units.

Section II. COMPANY HEADQUARTERS ORGANIZATION AND FUNCTION

F-3. Company Headquarters

a. The company headquarters section provides C2 for the company and attached units. It provides unit-level administration, general supply, and NBC operating support. It also provides CHL support

and operates a supply distribution point of Class VIII push-packages for supported medical units and combat lifesavers operating in the IBCT AO. The company also provides unit-medical equipment repair capability.

b. The company headquarters section (Figure F-2) is organized into a command element, a supply element, and a support operations element consisting of unit decontamination, NBC, and a small arms repair capability. For communications, the company establishes an FM and AM radio net and a wire net (refer to FM 8-10). For communications, automation, and navigational capability, it employs the following assets:

- Frequency-modulated radios, single-channel ground and airborne radio system (SINCGARS) (AN/VRC 89-F and AN/VRC 90-F), for C2 and an AM, AN/VRC0-213, radio for reach-back operations communications capability with supporting medical elements at EAB.

- The FBCB2 System for situational understanding.

- The MC4 capability (when fielded) with laptop computers for functional area operations and medical information management.

- Enhanced Position Location Reporting System-user unit employed in conjunction with SINCGARS and FBCB2 to facilitate MC4 requirements.

- An AN/VSX-4 transponder (battlefield combat identification system [BCIS]) for fratricide avoidance (when issued).

- An MTS control station (when issued) for tracking and messaging forward deployed medical elements.

F-4. Command Element

The command element is responsible for providing billeting, security, training, administration, and discipline for assigned personnel. This element provides C2 of its assigned and attached personnel. It is typically staffed with a company commander, an XO, and a 1SG.

NOTE

Currently, medical company commanders' positions are documented 05, AMEDD immaterial, meaning any qualified AMEDD officer can assume command. When the medical company commander is not a physician, medical decisions and technical supervision are performed by the treatment platoon leader. The treatment platoon leader's position should always be filled by a physician.

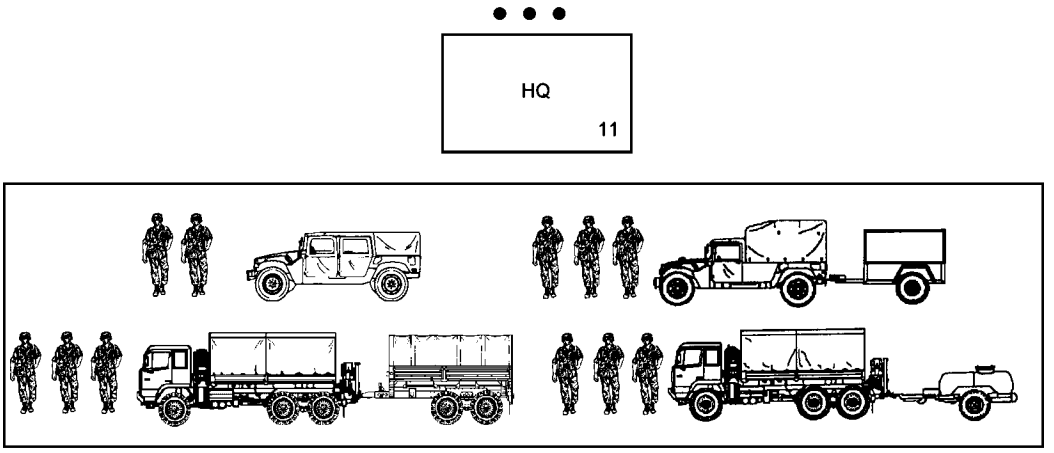

PERSONNEL:	2/0/9
O4 - CDR	(1)
O3 - XO	(1)
E8 - 1SG	(1)
E5 - MEDLOG SGT	(1)
E5 - SUPPLY SGT	(1)
E4 - DECON SPC	(1)
E4 - NBC SPC	(1)
E4 - MED EQUIP REP	(1)
E4 - ARMORER	(1)
E4 - MEDLOG SPC	(1)
E3 - MEDLOG SPC	(1)

MAJOR EQUIPMENT:	
HMMWV	(2)
TRL, HMMWV	(1)
FMTV	(2)
TRL, WATER	(1)
TRL, FMTV	(1)

COMMUNICATIONS:			
VRC - 89F	(3)	EPLRS	(3)
VRC - 90F	(3)	GRC-213	(1)
FBCB2	(4)		

AUTOMATION:	
MC4/LAPTOP	(4)
MTS CTRL STA	(1)
GCSS-A	(1)
ULLS - S4	(1)
BCIS-NS	(4)
GPS	(1)

Figure F-2. Company headquarters section depicting personnel, major equipment, and communications/automation enablers.

F-5. Logistics Elements

The logistics elements include a general supply element, a CHL element, and a medical equipment maintenance element. These elements provide Class VIII resupply, medical equipment repair, general supply, and armorer support for the BSMC's organic platoons/sections and attached medical units.

a. *Unit Supply Element*. The unit supply element is responsible for managing, requesting, receiving, issuing, storing, and maintaining all classes of supplies and turn-in supplies and equipment for the company. It also employs the ULLS/S4 for automated supply activities. The unit supply sergeant coordinates all general supply, equipment requirements, and actions with the XO and the logistics support operations officer of the BSB support operations section.

b. *Combat Health Logistics Element*. The CHL element establishes the CHL distribution point and manages Class VIII. The MEDLOG sergeant of this element coordinates CHL requirements through the BSMC XO with the HSMO of the BSB support operations section and the BSS.

(1) The CHL element fills Class VIII requisitions for supported units and the BSMC. It issues Class VIII supplies to all treatment elements of the company, monitors the expirations of perishable medications, and requisitions accordingly. When blood/blood products are received at the BSMC, they are distributed to the treatment platoon (area support squad medical laboratory element) for storage, managing, monitoring and further distribution. The treatment platoon is responsible for the preparation of the blood situation report.

(2) Blood and blood products for the supporting FST will be issued directly to that unit for use, management, and reporting,

(3) The BSMC CHL element and the BSB HSMO will use the Combat Service Support Control System (CSSCS), the FBCB2 system radios, telephones, and facsimile (FAX), and the GCSS-A for requisitioning and monitoring Class VIII requirements for the IBCT and its supporting medical augmentation elements. In the future, a Defense Medical Logistics Standard Support-Amplitude-Modulated (DMLSS-AM) functional module of the TMIP/MC4 systems. When the TMIP/MC4 becomes available, it will serve as a reach-back CHL capability for the IBCT. This element employs the FBCB2 and uses the tactical internet to intercept CALL FOR SUPPORT (medical) traffic.

c. *Medical Equipment Maintenance Element*. The medical equipment maintenance element provides operational and unit-level medical equipment maintenance for the BSMC and all other medical elements of the IBCT.

Section III. EMPLOYMENT OF THE MEDICAL COMPANY

F-6. Establishment of the Company Headquarters

a. In establishing the company headquarters, the command element must ensure that communication is established with the units within the BSB and BSA. All security precautions and requirements must be met according to BSB and BSA operating procedures. Only essential equipment is set up to support the medical company operations. If the failure to camouflage endangers or compromises tactical operations, the camouflage of the MTF may be ordered by a commander of at least brigade level or equivalent (refer to STANAG 2931). Dispersion of shelter systems and equipment is accomplished to the maximum extent possible.

b. The command element supervises the establishment of the company. The commander monitors all elements as the company sets up. He ensures the BSMC is established according to the unit layout and the TSOP. The XO and the 1SG assist the company commander. The XO supervises and monitors the establishment of the company area for compliance with the BSB TSOP and IBCT guidance. The XO coordinates with supporting units/elements for support requirements. Both the commander and XO should interface with supported units as soon as possible.

c. The 1SG focuses his attention toward ensuring all unit security requirements are accomplished. The 1SG supervises the establishment of the company headquarters and the troop billeting areas. He monitors field sanitation team activities. The operations element assists in establishing the company headquarters. The NBC NCO supervises the company NBC team by monitoring its activities and use of unit NBC-monitoring equipment. He coordinates with other BSB units and monitors the placement of early warning devices for the detection of chemical agents. He supervises and monitors unit personnel for compliance with correct wear of MOPP clothing and equipment according to the current MOPP level and TSOP.

d. Unit personnel set up communications equipment and establish the NCS for the company. They establish contact with the battalion headquarters and with supporting and supported units. Unit personnel also establish the internal wire communications net. They connect to the MSE area system at the wire subscriber access point operated by the area support signal element.

e. The logistics element establishes the unit supply for the company and establishes a Class VIII supply distribution point for all medical elements operating in IBCT battle space. This element ensures all supplies are secured, properly stored, and protected from the environment and establishes the unit POL and water points.

F-7. Preventive Medicine Section

The PVNTMED section (Figure F-3) assigned to BSMC has primary responsibility for supervising the unit's PVNTMED program as described in FM 4-02.17. The section is primarily responsible for identifying medical threats and occupational and environmental health hazards, assessing the health risk associated with these threats, and recommending protective measures.

a. The PVNTMED section provides advice and consultation in the areas of health threat assessment, force health protection, environmental sanitation, epidemiology, sanitary engineering, and pest management. Through routine surveillance, they identify actual and potential health hazards, recommend corrective measures, and assist in training IBCT personnel in disease prevention programs

b. Functions of the PVNTMED section include—

- Assisting the commander in preparing staff estimates by identifying the medical threat and risk assessments.

- Assisting the higher headquarters in determining requirements for medical intelligence assessments, particularly with respects to TIM and disease prevalence.

- Assisting units in the training of PVNTMED measures (PMM) against heat and cold injuries, as well as food-, water-, and arthropodborne diseases.

- Coordinate with supporting veterinary teams for conducting and implementing food safety and quality assurance surveillance and assisting in foodborne and zoonotic disease surveillance and control.

- Monitoring the brigade immunization program.

- Monitoring and approving the health-related aspects of water and ice sources, to include production, distribution, and consumption.

- Conducting occupational and environmental health hazard surveillance of the unit's AO and initiating preemptive occupational and environmental health preventive measures.

- Conducting epidemiological investigations of disease outbreaks and recommending PMM to minimize their effects.

- Collecting and shipping samples/specimens to the supporting medical laboratory to rule out or confirm presence of a medical threat.

- Coordinating for NBC reconnaissance vehicle to assist with environmental monitoring to verify presence of toxic industrial material.

- Conducting limited entomological investigations and coordinating control measures.

- Monitoring environmental and meteorological conditions, assessing their health-related impact on operations, and recommending PMM to minimize heat or cold and high altitude injuries.

- Training unit field sanitation teams for assigned or attached units IAW FM 21-10-1 and assessing their effectiveness.

- Conducting surveillance of all assigned and attached brigade units to ensure field sanitation procedures are implemented and to identify any existing or potential medical threats.

- Monitoring disposal practices/facilities for all classes of waste in the AO.

Additional information pertaining to PVNTMED staff and specific functions is discussed in Chapter 3 and in FM 4-02.17. The PVNTMED section is deployed BSMC's FM command net. For a communications, automation, and navigational capability, PVNTMED section employs the following assets:

- An FBCB2 system for situational understanding and functional area operations.

• An EPLRS used in conjunction with SINCGARS radio and FBCB2 system to facilitate the MC4 requirement.

• An AN/VRC 90-F for area communication. The PVNTMED section is employed in the BSMC command net and has the capability to interface other FM nets as required.

• An MC4 capability with a laptop computer for CHS functional area operations and medical situational understanding and medical surveillance reporting.

• An AN/VSX-4 transponder (BCIS) for fratricide avoidance (when issued).

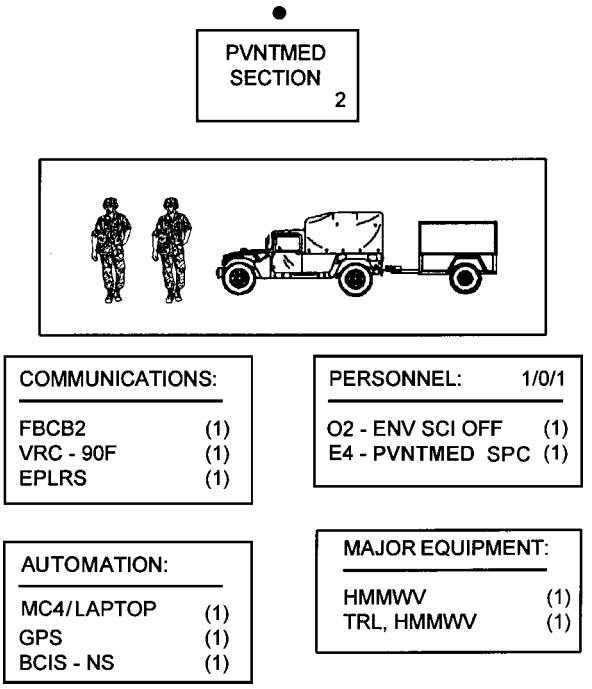

Figure F-3. Preventive medicine section depicting personnel, major equipment, and communications/automation enablers.

F-8. Employment of the Preventive Medicine Section

a. Preventive medicine activities begin prior to deployment to minimize DNBIs. Actions taken include—

• Supporting command awareness of potential medical threats and occupational and environmental health hazards and implementation of appropriate protective measures.

- Ensuring the deployment of a healthy and fit force.
- Monitoring the command's immunization status (see AR 40-562).
- Monitoring water supplies, to include NBC contamination.
- Monitoring the status of individual and small unit PMM (see FM 21-10).
- Monitoring against heat and cold injuries, occupational and environmental health hazards, NBC/TIM contamination of water, and food-, water-, and arthropodborne diseases (see FM 4-02.17).
- Ensuring unit training in PVNTMED to countering the medical threat.
- Monitoring the use of prophylaxes such as antimalarial tablets.
- Monitoring, analyzing, and reporting medical surveillance information.

b. Effective PVNTMED operations are characterized by preemptive actions. Lack of or delay in implementing preemptive actions can significantly impact on the deployment forces' ability to accomplish its assigned mission.

c. Preventive medicine support operations are prioritized based on the mission, medical threat, medical surveillance, occupational and environmental health hazard surveillance, and assessment of data collected (through monitoring, inspecting, and reporting observations).

d. Preventive medicine assistance is requested through the brigade surgeon's section or the BSB support operations section. Preventive medicine missions received by the BSB will be coordinated with the BSS for establishing its priority. The brigade surgeon will establish priorities and coordinate PVNTMED section support. The BSS submits the request to the brigade S3 and it tasks the BSB with the support mission. The request for support is sent to the BSB support operations section/combat health support cell HSSO. The HSSO keeps the BSB and BSMC commanders informed on any tasks with a high priority. Upon receipt of the mission, the BSMC commander will accept or reject the mission based on current capabilities and other METT-TC factors. Coordination is required with the BSS when these tasking cannot be accomplished or accomplished in a timely manner, or if corps augmentation support for PVNTMED is required. Since priorities change on a daily basis, any PVNTMED support missions not accomplished must be coordinated with the BSS to ensure priorities have not changed.

F-9. Mental Health Section

a. The MH section (Figure F-4) consists of a behavioral science officer and a MH specialist. They are responsible for assisting commanders in controlling combat and operational stress through sound prevention programs. The COSC team operates under the direction of the BSMC commander and provides brigade-wide MH services. See FM 8-51 for details on COSC duties. The behavioral science officer and

MH specialist are especially concerned with assisting and training warfighter small-unit leaders, to include members of unit ministry teams, members of forward deployed medical platoons/sections, and medical treatment personnel of BSMC.

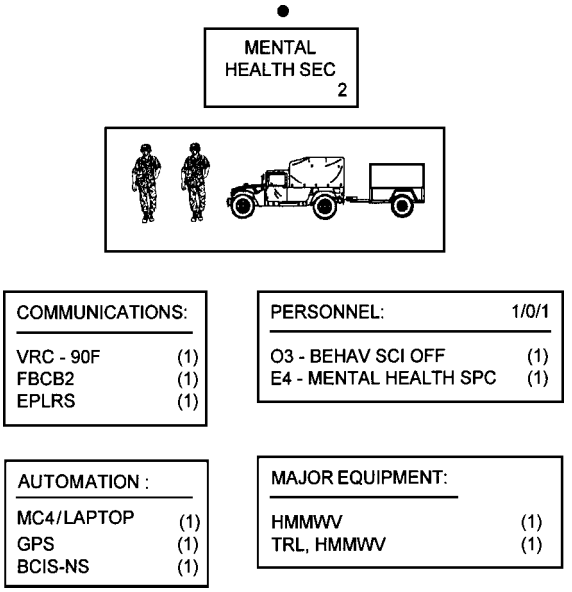

Figure F-4. Mental health section depicting personnel, major equipment, and communications/automation enablers.

b. The BSMC MH section provides training and advice in the control of stressors, the promotion of positive combat/operation stress behaviors, and the identification, handling, and management of misconduct stress behavior and BF soldiers. It coordinates COSC training for supported units. The section collects and records social and psychological data and counsels personnel with personal, behavioral, or psychological problems.

c. The company MH section uses the brigade clearing station as the center for its operations, but is mobile throughout the AO. The section's priority functions are to promote positive stress behaviors, prevent unnecessary evacuations, and coordinate RTD, not to treat cases. Through the treatment and ambulance platoon leaders and company commander, the section keeps abreast of the tactical situation and plans and projects requirements for COSC support when units are pulled back for rest and recuperation. For definitive information on COSC operations, see FMs 8-10, 8-51, and 22-51. The MH section will be employed in the BSMC's command net (refer to Appendix I). For communications, automation, and navigational capability, the MH section employs the following assets:

- An FBCB2 system for situational understanding in functional area operations; this asset is employed in the tactical internet to respond to CALL FOR SUPPORT (medical) traffic.

- An EPLRS used in conjunction with the SINCGARS radio and the FBCB2 system to facilitate MC4 for managing medical information.

- An AN/VRC 90-F for area communications. The MH section is employed in the BSMC command net and has the capability to interface with other FM nets as required.

- An MC4 capability (when fielded) with a laptop computer for CHS functional area operations and medical situational understanding.

- A transponder (BCIS). for fratricide avoidance (when issued).

- A Defense Advanced Global Positioning System Receiver (DAGR) (when issued) for its vehicle.

d. Functions of the IBCT BSMC mental health section include—

- Conducting surveys and evaluating data to assess unit cohesion and other factors related to prediction and prevention of both BF casualties and misconduct stress behaviors.

- Identifying and resolve organizational behavioral and social environmental factors that interfere with combat readiness.

- Monitoring indicators of dysfunctional stress in units.

- Providing consultation and triage as requested for soldiers exhibiting signs of combat stress or neuropsychiatric disorders.

- Coordinating mental health and stabilization support for soldiers and for their families from Army and civilian community support agencies.

- Providing counseling to soldiers experiencing emotional or social problems.

- Assisting in the evaluation of command referred emotionally and mentally impaired soldiers according to Department of Defense Directives (DODDs) 6490.1, Mental Health Evaluation of Members of the Armed Forces and 6490.5, Combat Stress Control Program.

- Conducting critical-event debriefings/diffusings following traumatic events within the IBCT.

- Coordinating and/or assisting with getting commanders and their staffs involved in after action briefings led by unit and small group leaders.

- Providing stress management training to commander, leaders, and individuals for recognizing and coping with excessive stress to include leader's actions for resolving stress related problems and individual actions for coping with excessive stress.

- Providing COSC consultation services for unit commanders and feedback on the status of morale, unit cohesion, and adverse trends in their units. Provide recommendations for prevention or actions required to ensure positive mission-oriented motivation of unit members and unit cohesion.

- Conducting and oversee a three-day unit restoration program for IBCT soldiers experiencing BF or other stress related disorders as required according to FM 8-51.

- Developing TSOPs and TTPs to facilitate the timely acquisition, treatment, disposition and or RTD of IBCT soldiers with BF or other stress related disorders.

- Ensuring patient encounters are recorded in the soldier's individual HREC and CEMRs in the field. The governing regulation is AR 40-66.

- Providing predeployment briefings, postdeployment debriefings, and reunion briefings, for IBCT personnel and family support groups.

- Providing COSC training and consultation to IBCT medical personnel.

- Providing mental health support in garrison for unit soldiers and families by working with unit commanders, chaplains, and other medical personnel or if the mission permits, to augment home station community mental health activity.

- Providing consultation, training, and support to the brigade's Alcohol and Drug Prevention and Control Program.

- Maintaining technical and tactical proficiency by participating in CME activities, and ARTEP/Common Task Test related training.

e. Mental health assistance is requested through the brigade surgeon's section or the BSB support operations section. Mental health missions received by the BSB will be coordinated with the BSS for establishing its priority. The brigade surgeon will establish priorities and coordinate mental health section support. Mental health support request within the brigade are submitted to the BSS. The BSS submits the request to the brigade S3 and it tasks the BSB with the support mission. The request for support is sent to the BSB support operations section/combat health support cell HSSO. The HSSO keeps the BSB and BSMC commanders informed on any tasks with a high priority. Upon receipt of the mission, the BSMC commander will accept or reject the mission based on current capabilities and other METT-TC factors. Coordination is required with the BSS when the requested mental health support cannot be provided or accomplished in a timely manner, or if corps augmentation support for mental health is required. Since priorities change on a daily basis, any tasking mission not accomplished must be coordinated with the BSS to ensure priorities have not changed.

Section IV. THE TREATMENT PLATOON

F-10. General

The treatment platoon (Figure F-5) contains a treatment squad, an area support treatment squad, an area support squad, and a patient-holding squad. The treatment squad includes two treatment teams to provide Echelon I area support and augmentation support to IBCT maneuver battalions, as required. Each of the treatment teams has a HMMWV ambulance (with trailer) to transport the team and its equipment. The area support treatment squad is comprised of two treatment teams that operate and provide continuous coverage for the clearing station. The area support squad provides operational dental care, as well as limited clinical laboratory and x-ray support to the brigade. The patient-holding squad provides a patient-holding facility capability of 20 cots. Its primary function is to hold patients awaiting evacuation out of the brigade's AO; a secondary function is to hold soldiers who are expected to RTD within 72 hours. The area support treatment squad, the area support squad, and the patient-holding squad are the elements required to establish the brigade clearing station of which the treatment platoon is responsible for operating. The clearing station/MTF receives, triages, treats, and determines the disposition of patients based upon their medical condition. This platoon provides professional services in the areas of minor surgery, internal medicine, general medicine, and general dentistry. In addition, it provides patient holding, basic laboratory procedures for blood cell counts, urinalysis, and microbiology, and radiological services. When patients are able to RTD after having received treatment, the MTF coordinates with the brigade S1, who in turn contacts the respective unit to pick up the soldier, or follows brigade standing operating procedures (SOP). The treatment platoon also serves as the alternate CP for the BSMC.

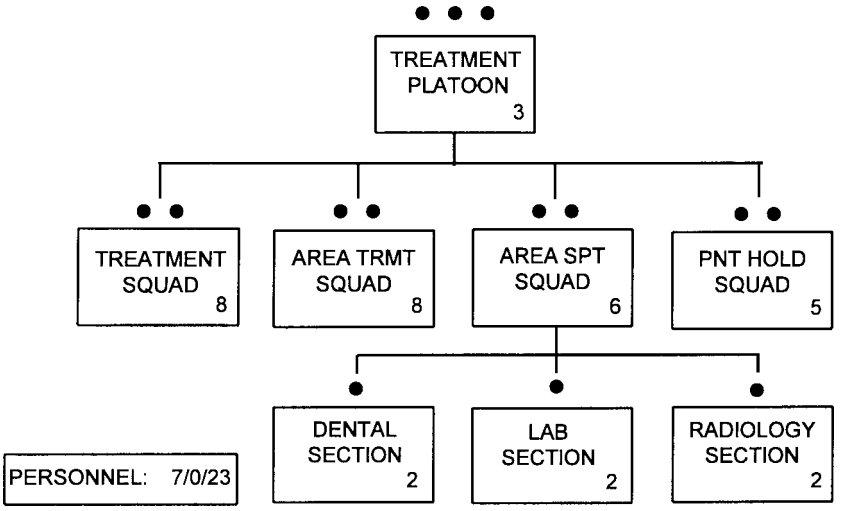

Figure F-5. Treatment platoon.

F-11. Treatment Platoon Headquarters

The treatment platoon headquarters (Figure F-6) element directs, coordinates, and supervises platoon operations based on the IBCT CHS plan. The headquarters element directs the activities of the BSMC's clearing station and monitors Class VIII supplies, blood usage, and inventory levels, and keeps the commander informed. The headquarters element is responsible for the management of platoon operations, OPSEC, communications, administration, organizational training, supply, transportation, patient accountability and statistical reporting functions, and coordination for patient evacuation. For communications, the headquarters employs an FM radio for C2, and is employed in the BSMC command and internal wire net. It also employs an MC4 (laptop computer) capability for patient accounting and reporting. The platoon and its treatment teams also employ an MC4 device to initiate/update the electronic information carrier (EICs). The platoon headquarters is responsible for supervising the treatment platoon support activities. The platoon establishes an NCS and is employed in the BSMC's command net (See Appendix I and Figure I-3) For communications, automation, and navigational capability, the treatment platoon headquarters employs the following assets:

- Two FBCB2 systems for functional area reporting and situational understanding. The platoon headquarters employs FBCB2 and uses the tactical internet applique, to intercept CALL FOR SUPPORT (medical) traffic.

- Two EPLRS used in conjunction with the SINCGARS radio supporting FBCB2 and MC4 requirements.

- Two AN/VRC 89-F for C2 communications with supporting air ambulances. The treatment platoon establishes a platoon NCS and is employed in the BSMC command FM net.

- An MC4 capability (when fielded) with two laptop computers for CHS functional area operations and medical situational understanding.

- An AN/VSX-4 transponder (BCIS) for fratricide avoidance (when issued).

- A DAGR for its vehicle.

F-12. Treatment Squad

The treatment squad (Figure F-7) provides emergency and routine sick call treatment to soldiers assigned or attached to supported units. This squad is deployed in DS of CS/CSS units. When positioned with the BSMC, the treatment squad personnel work in the clearing station. The treatment squad/team must be prepared for short-notice, forward deployment; therefore, personnel, MESs, and vehicles must be in a state of readiness. The squad has the capability to split and operate as separate treatment teams (Teams A and B) for limited periods of time. While operating in these separate modes, they may operate up to two aid stations. For communications, automation, and navigational capabilities, this squad is employed in the platoon headquarters FM net and employs the following assets:

- An MC4 capability (when fielded) with four laptop computers for CHS functional area operations and medical situational understanding.

- Two FBCB2 systems for situational understanding and functional area operations. This element employs the FBCB2 and uses the tactical internet applique, to intercept CALL FOR SUPPORT (medical) traffic.

- Two EPLRS used in conjunction with SINCGARS radio supporting FBCB2 and MC4 requirements.

- Team A employs an AN/VRC 89-F and Team B employs an AN/VRC 88-F for communications with supported and supporting elements. The squad is employed in the treatment platoon's FM net.

- A transponder (BCIS) for fratricide avoidance; one per team (when issued).

- When issued, two DAGR (one for each vehicle).

- Two GPS.

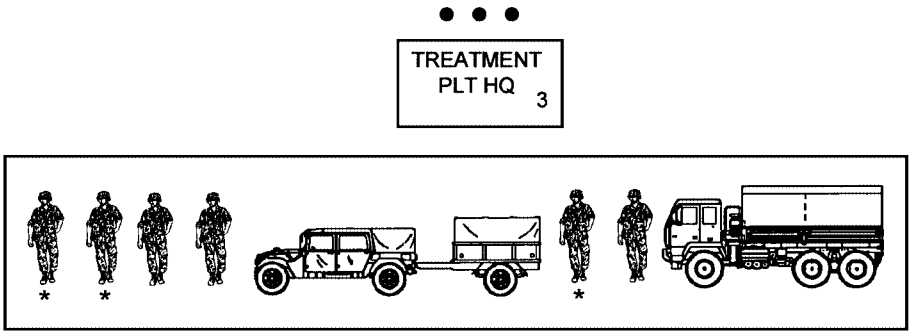

COMMUNICATIONS:	
FBCB2	(2)
VRC - 89F	(2)
EPLRS	(2)

AUTOMATION:	
MC4/LAPTOP	(2)
BCIS - NS	(2)
GPS	(2)

PERSONNEL :	1/0/2
O2 - FLD MED ASST	(1)
E7 - PLT SGT	(1)
E4 - PATIENT ADMIN SPC	(1)

NOTE: PLT LDR IS MC IN THE AREA SUPPORT SECTION.

* NURSE, MED SPC, AND DENTIST DISPLAYED FOR UNIT MOVEMENT ONLY.

MAJOR EQUIPMENT:	
HMMWV	(1)
TRL, HMMWV	(1)
FMTV	(1)

Figure F-6. Treatment platoon headquarters depicting personnel, major equipment, and communications/automation enablers.

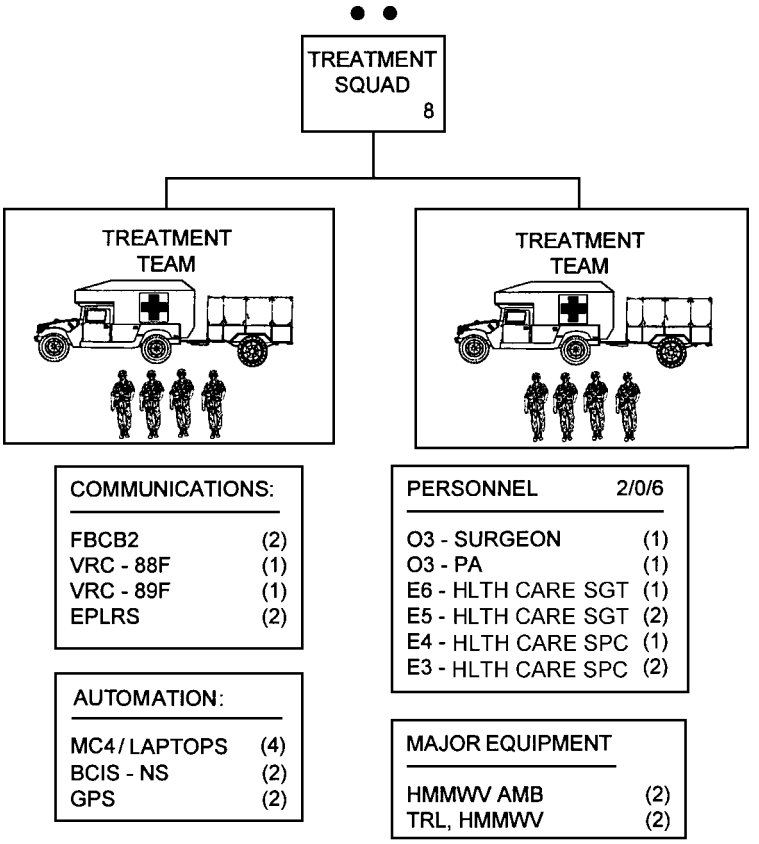

Figure F-7. Treatment squad depicting personnel, major equipment, and communications/automation enablers.

F-13. Area Treatment Squad

The area treatment squad (Figure F-8), along with the area support squad and patient-holding squad, form the brigade clearing station (Echelon II MTF). The area treatment squad is the base medical treatment element of the clearing station and does not deploy from the BSMC. The squad provides routine sick call services and initial resuscitative treatment (ATM and EMT) for supported units. For communications, the squad employs FM radios and is deployed in the BSMC's radio and internal wire communications nets. Teams of this squad operate their radios on the treatment platoon FM net (see Appendix I). For communications, automation, and navigational capabilities, this squad employs the following assets:

- Two FBCB2 systems for situational understanding and functional area operations. These two teams employ the FBCB2 systems and use the tactical internet to facilitate the displacement of the clearing station and to intercept and respond to CALL FOR SUPPORT (medical) traffic.

- Two EPLRS used in conjunction with SINCGARS radio supporting FBCB2 and MC4 requirements.

- Team A employs an AN/VRC 89-F and Team B employs an AN/VRC 88-F for communications with supported and supporting elements. The squad is employed in the treatment platoon FM net.

- An MC4 capability (when fielded) with four laptop computers (two per team) for CHS functional area operations and medical situational understanding.

- Two AN/VSX-4 transponder (BCIS) for fratricide avoidance (when issued).

- Two GPS.

NOTE

This squad, because it operates the brigade clearing station, is not used to reinforce or reconstitute other medical units. It is not used as part of the area damage control team.

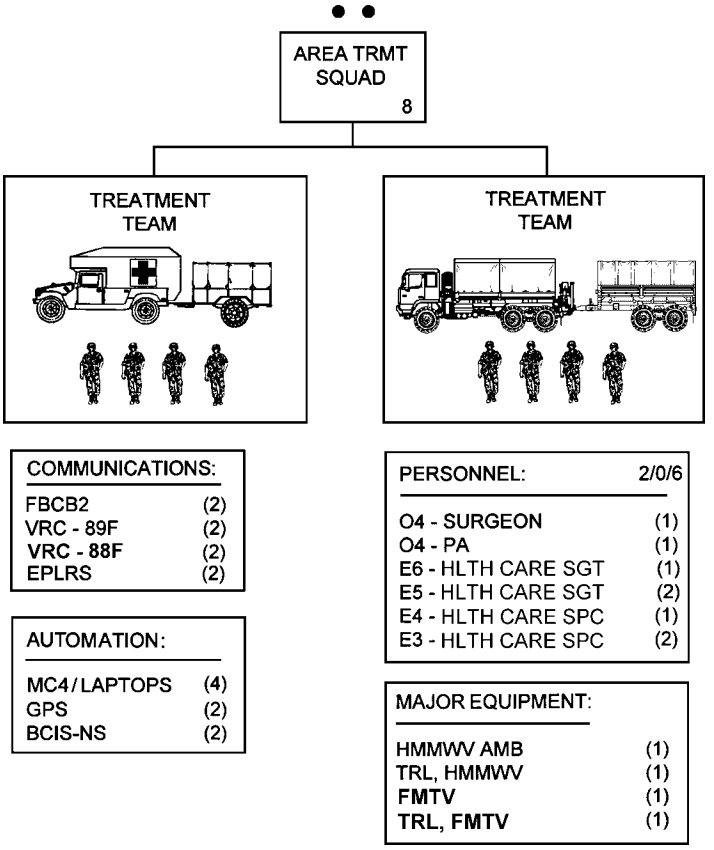

Figure F-8. Area treatment squad depicting personnel, major equipment, and communications/automation enablers.

F-14. Area Support Squad

The area support squad (Figure F-9) includes the dental, medical laboratory, and field x-ray capability. It provides for basic services commensurate with Echelon II medical treatment. The area support squad is typically staffed with a dental officer (63A00), a dental specialist (E4, 91E10), a medical laboratory sergeant (E5, 91K20) and medical laboratory specialist (E4, 91K10), a radiology sergeant (E5, 91P20) and a radiology specialist (E4, 91P10). The dental officer supervises the activities of the area support squad. The area support squad is employed in the treatment platoon FM net (see Appendix I). For communications, automation, and navigation, this squad employs the following assets:

- An AN/VRC 89-F for communications with supporting air and ground ambulances.

- An MC4 capability (when fielded) with one laptop computer for CHS functional area operations and medical situational understanding.

- One AN/VSX-4 transponder (BCIS) (when issued) for fratricide avoidance; one per vehicle.

NOTE

This squad is not used to reinforce or reconstitute other medical units.
It is also, it is not normally used on the area damage control team.

a. *Dental Element*.

(1) The dental element provides operational dental care which consists of emergency dental care and essential dental care intended to intercept dental emergencies. This also includes dental consultation and x-ray services.

(2) Operational dental care is the care given for the relief of pain, elimination of acute infection, control of life-threatening oral conditions (hemorrhage, cellulitis, or respiratory difficulty); treatment of trauma to teeth, jaws, and associated facial structures is considered emergency care. It is the most austere type of care and is available to soldiers engaged in tactical operations. Common examples of emergency treatment are simple extractions, antibiotics, pain medication, and temporary fillings. Essential care includes dental treatment necessary for prevention of lost duty time and preservation of fighting strength. Soldiers in dental Class 3 (potential dental emergencies) should be provided essential care as the tactical situation permits (refer to FM 4-02.19 for a detailed discussion on dental operations).

b. *Medical Laboratory Element*. The medical laboratory element performs clinical laboratory and blood banking procedures to aid physicians and PAs in the diagnosis, treatment, and prevention of diseases and other medical disorders. Laboratory functions include performing laboratory procedures consistent with the Echelon II treatment capabilities. This element is responsible for storing and issuing blood (liquid red blood cells).

c. Radiology Element. The radiology element operates x-ray equipment consistent with the Echelon II treatment capabilities. It is capable of both plane film and regional digital radiography. With the augmentation of the MDT, this element will also have a reach-back telemedicine capability to request and acquire digital radiographic diagnostic assistance. The section performs routine clinical radiological procedures to aid physicians and PAs in the diagnosis and treatment of patients. Specific functions performed by this element include—

- Interpreting physicians' orders, applying radiation and electrical protective measures, operating and maintaining x-ray equipment, and taking x-rays of the extremities, chest, trunk, and skull.
- Performing manual and automatic radiographic film processing (darkroom) procedures.
- Assembling x-ray film files for the patients remaining within the brigade, or arranging for such film to accompany those patients who are evacuated out of the AO.
- Assisting the NBC NCO with radiological monitoring, surveying, and documentation procedures.
- Operating and maintaining the assigned generator.

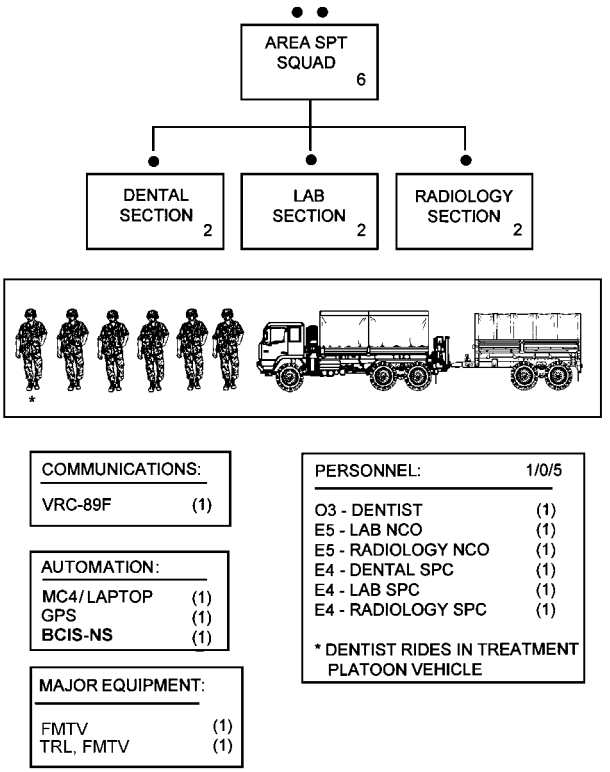

Figure F-9. Area support squad, depicting personnel, major equipment, and communications/automation enablers.

F-15. Patient-Holding Squad

a. The patient-holding squad (Figure F-10) operates the patient-holding facility of brigade clearing station. The holding facility is staffed and equipped to provide care for up to 20 patients. Normally, only those patients awaiting evacuation or those requiring treatment of minor illness or injuries and who are expected to RTD within 72 hours are placed in the patient-holding area. The medical-surgical nurse assigned to the patient-holding squad provides nursing care supervision and is responsible for the operation of the holding facility. Since Echelon II facilities, such as the BSMC, do not have an admission capability, patients may only be held at this facility and are not counted as hospital admissions.

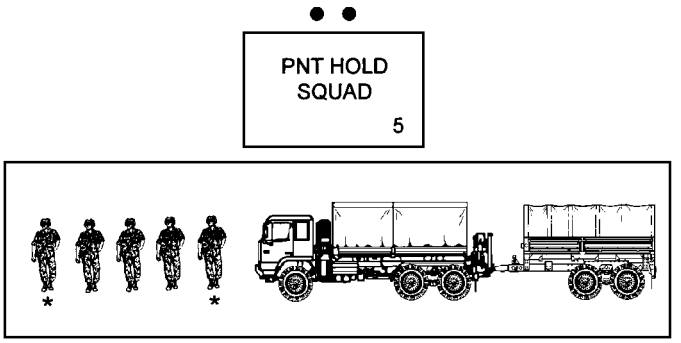

COMMUNICATIONS:	
FBCB2	(1)
VRC-88F	(1)
EPLRS	(1)

AUTOMATION:	
MC4/LAPTOP	(1)
BCIS-NS	(1)
GPS	(1)

MAJOR EQUIPMENT:	
FMTV	(1)
TRL, FMTV	(1)

PERSONNEL:	1/0/4
O3 - MEDSURG NRS	(1)
E5 - HLTH CARE SGT	(2)
E4 - HLTH CARE SPC	(1)
E3 - HLTH CARE SPC	(1)

* NURSE AND HLTH CARE SPC RIDE IN TREATMENT PLT HQ VEHICLE

Figure F-10. Patient-holding squad, treatment platoon depicting personnel, major equipment, and communications/automation enablers.

b. The patient-holding facility also serves as a patient-overflow recovery area for the FST. If recovery and RTD is not expected within 72 hours, then the patients are sent to an Echelon III hospital.

NOTE

The IBCT commander on advice of the brigade surgeon, may extend this period up to 96 hours under certain battlefield conditions.

c. For communications, automation, and navigational capabilities, this squad is employed in the treatment platoon's FM net and employs the following assets:

- An FBCB2 system for situational understanding and functional area operations.
- An EPLRS used in conjunction with SINCGARS radio and the FBCB2 system to facilitate MC4 requirements.
- An AN/VRC 88-F employed in the treatment platoon FM net.
- When fielded, an MC4 capability with a laptop computer for CHS functional area operations and medical situational understanding.
- An AN/VSX-4 for fratricide avoidance.
- One DAGR for its vehicle, when issued.

F-16. Employment of the Treatment Platoon

a. The treatment platoon establishes its elements using the BSMC layout plan. The platoon headquarters element supervises the establishment of platoon operations. The platoon leader directs set-up operations and supervises the displacement of treatment squads/teams, when necessary. The field medical assistant assists the platoon leader in supervising establishment operations and coordinates the displacement of treatment squads/teams with company headquarters and supported units. He ensures all platoon elements perform PMCS on their assigned equipment and reports any deficiencies that are not correctable to the platoon leader, who reports them to the company commander.

b. The area treatment squad establishes all treatment areas as directed by the treatment platoon leader. This DS treatment team from the area support treatment squad is tasked with providing medical support for the company until the clearing station is established.

c. The dental treatment facility is established within the clearing station/MTF. The dental officer supervises the placement of dental supplies and equipment within the dental treatment area.

d. The laboratory element and the radiology element are established within the clearing station/ MTF area. Precautions for operating radiological equipment must be observed. Radiation hazard areas adjacent to the x-ray facility must be clearly marked and blocked so that personnel are prevented from crossing too closely to the facility.

e. The patient-holding squad sets up the patient-holding facility, which is an integral part of the clearing station. The treatment platoon leader, based on troop concentration and casualty estimates, determines the number of cots to set up. If the commander directs that less than 20 cots are to be set up, this may dictate that only one general-purpose large tent be erected. Water, latrine, and a handwash area should be established for the convenience of those patients being held at this facility.

Section V. THE EVACUATION PLATOON

F-17. General

The evacuation platoon (Figure F-11) performs ground evacuation and en route patient care for the supported units. The evacuation platoon consists of a platoon headquarters, a GS evacuation section, and a DS evacuation section. The platoon employs five HMMWV evacuation squads (or ten ambulance teams).

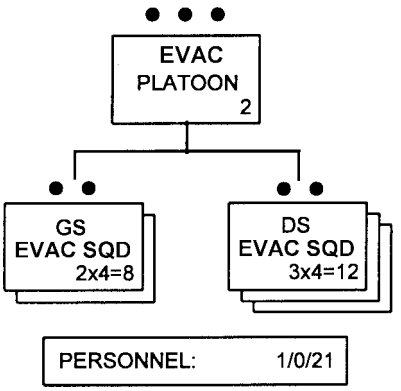

Figure F-11. Evacuation platoon, brigade support medical company.

F-18. Evacuation Platoon Headquarters

a. The evacuation platoon headquarters (Figure F-12) element provides C2 for platoon operations. It maintains communications to direct ground ambulance evacuation of patients. It provides ground ambulance evacuation support for the maneuver battalions of the supported brigade combat team and to units operating in the BSA. It also provides ground ambulance support to other units receiving area medical

support from the BSMC. Further medical evacuation to Echelon III hospitals is the responsibility of the next higher echelon, to include ground and air evacuation. Personnel assigned to the evacuation platoon headquarters include the platoon leader and platoon sergeant.

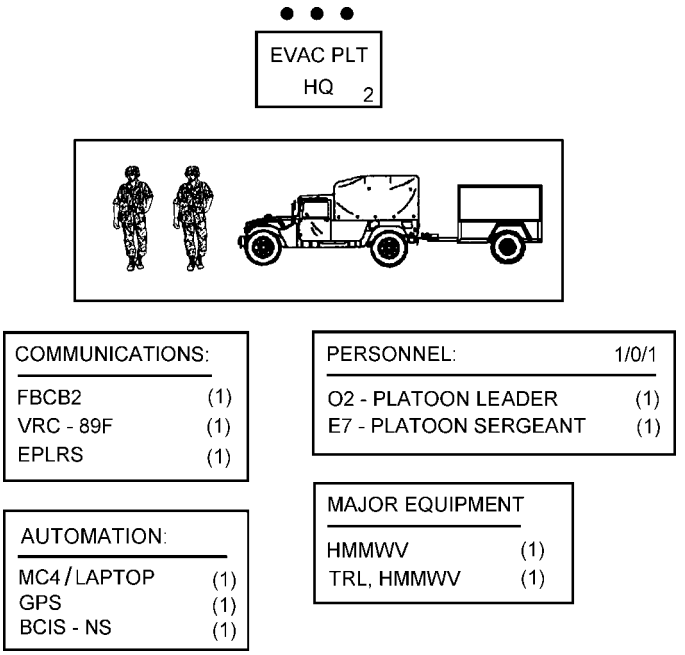

Figure F-12. Evacuation platoon headquarters depicting personnel, major equipment, and communications/automation enablers.

b. The evacuation platoon headquarters element directs and coordinates ground evacuation of patients. This element supervises the platoon and plans for its employment. It establishes and maintains contact with supported units and forward deployed treatment squad/teams of the BSMC. The platoon headquarters element performs route reconnaissance and develops and issues all necessary route and navigational information, to include strip maps, maps, graphic control measures, and any other pertinent information. If possible, the information is provided via the FBCB2 system to all ambulance teams. The platoon headquarters element also coordinates and establishes AXPs for both air and ground ambulances, as required. The EVAC platoon establishes an NCS for its EVAC teams. For communications, the platoon headquarters employs—

- An AN/VRC 89-F for C2. It is employed in the BSMC's command net and establishes a platoon net for connectivity with forward deployed evacuation squads.

- An FBCB2 system for situational understanding and functional area operations. The platoon employs the FBCB2 system and uses the tactical internet applique to intercept CALL FOR SUPPORT (medical evacuation) traffic.

- An EPLRS used in conjunction with the SINCGARS radio supporting FBCB2 and MC4 requirements.

- An MC4 (when fielded) capability with a laptop computer to facilitate functional area requirements.

- When issued, an AN/VSX-4 transponder (BCIS) for fratricide avoidance.

- A DAGR navigational device for its vehicle.

F-19. Evacuation Squads

a. The evacuation squads (Figures F-13 and F-14) provide ground evacuation of patients from supported units to the brigade clearing station/BSMC MTF. The evacuation squads consist of five emergency care sergeants and fifteen ambulance aides/drivers. Evacuation squad aide/evacuation personnel perform EMT, prepare patients for evacuation, and provide en route care for patients they evacuate. They also operate and maintain assigned radios and other CE equipment. Evacuation platoon personnel maintain and perform PMCS on assigned ambulances and associated equipment. Evacuation squad personnel maintain supply levels for the ambulance MESs. They ensure that appropriate property exchange of medical items (such as litters and blankets) is made at sending and receiving MTFs (Army only). Ambulance teams maintain situational understanding and use all available navigational tools to ensure quick and secure evacuation of patients.

b. For communications, each ambulance team/evacuation squad is employed in the platoon FM net. Each team employs the following communications, automation, and navigational equipment:

- An AN/VRC 90-F radio with the capability to monitor supported units FM radio nets.

- An FBCB2 system for situational understanding and functional area operations. Elements also employ the FBCB2 system and use the tactical internet applique to intercept and respond to CALL FOR SUPPORT (medical evacuation) traffic.

- An EPLRS, used in conjunction with SINCGARS radio and the FBCB2 system, to facilitate MC4 and operational area requirements.

- An MC4 capability (when fielded) with a laptop computer to facilitate functional area operations activity.

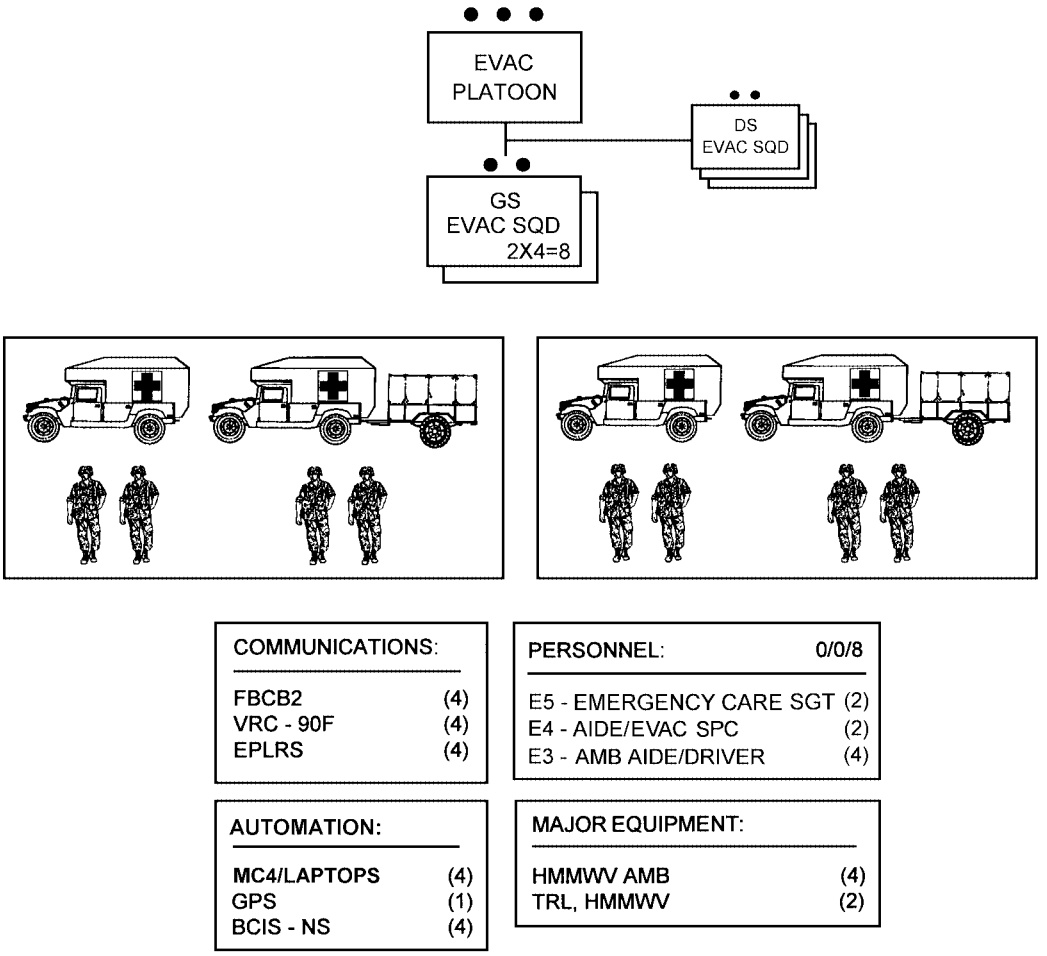

Figure F-13. Direct support evacuation squad depicting personnel, major equipment, and communications/automation enablers.

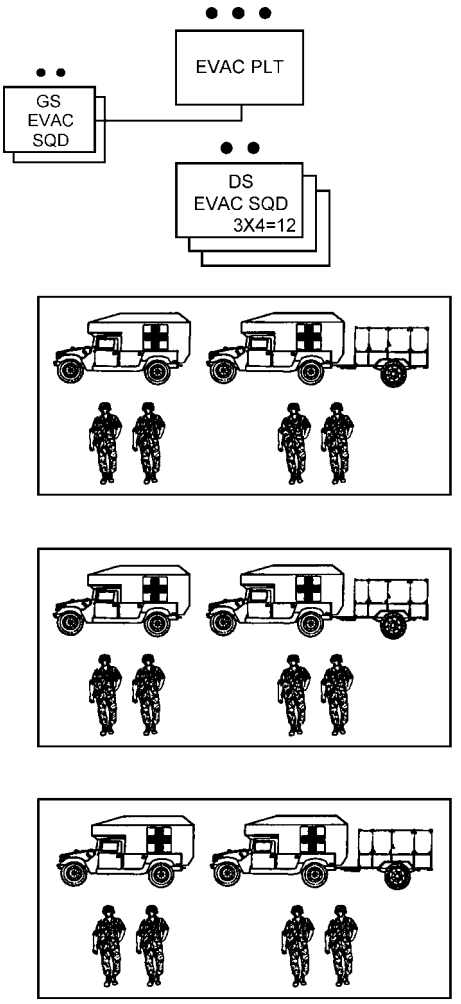

COMMUNICATIONS:	
FBCB2	(6)
VRC - 90F	(6)
EPLRS	(6)

PERSONNEL:	0/0/12
E5 - EMERGENCY CARE SGT	(3)
E4 - AIDE/EVAC SPC	(3)
E3 - AMB AIDE/DRIVER	(6)

AUTOMATION:	
MC4/LAPTOPS	(6)
GPS	(6)
BCIS - NS	(6)

MAJOR EQUIPMENT:	
HMMWV AMB	(6)
TRL, HMMWV	(3)

Figure F-14. General support evacuations squad depicting personnel, major equipment, and communications/automation enablers.

F-20. Employment of the Evacuation Platoon

Each ambulance team carries an on-board MES designed for medical emergencies and en route patient care. Ambulances either deploy forward to support maneuver battalions' BASs or with treatment squads/teams of the BSMC at AXPs. The evacuation platoon leader and platoon sergeant conduct reconnaissance of the area of support to establish primary and alternate evacuations routes, to verify locations of supported units, and to field site ambulance teams as necessary. The platoon leader and platoon sergeant coordinate support requirements with supported units for ambulance platoons placed in DS. Evacuation platoon personnel obtain appropriate dispatch and road clearances prior to departing company or supported unit areas. The platoon leader ensures that maps, graphic control measures, and all available information is provided to platoon personnel. If time and fuel permit, the platoon leader or platoon sergeant may take ambulance drivers on a rehearsal of the evacuation routes. The platoon leader/sergeant coordinates/establishes AXPs as required by the medical evacuation mission. The ambulances are usually positioned forward with the aid stations of maneuver battalions/squadrons. The DS ambulances normally evacuate patients from the aid stations back to the AXPs where patients are placed in either a ground or air ambulance for further medical evacuation back to the BSMC. The GS ambulances are used for area support missions. Evacuation platoon personnel assist with establishment of the BSMC and provide available personnel as tasked by the 1SG. For definitive information on medical evacuation operations, see FMs 8-10-6 and 8-10-26.

Section VI. COMBAT HEALTH LOGISTICS SUPPORT FOR THE BRIGADE COMBAT TEAM

F-21. Overview

a. The BSMC has limited Class VIII/blood management capability. During deployment, lodgment, and early buildup phases, the BSMC operate from planned, prescribed loads and from existing pre-positioned stocks identified in applicable contingency plans. The Strategic Logistics System for Class VIII is operated within CONUS by US Army Medical Materiel Agency (USAMMA) and the Defense Logistics Agency (DLA) depot system. If USAMMA coordinates Class VIII support of the AO, it is done with the designated medical C2 unit that is deploying and with the defense logistics activity of the Joint headquarters. This support consist of procurement and shipment of preplanned medical supply packages in support of the BSMC, medical platoon/section of IBCT maneuver battalion and other supporting medical elements. If home station MEDLOG activities provides the initial Class VIII supply/resupply, this is preplanned and prepackaged Class VIII materiel tailored to meet the need of the IBCT. Class VIII packages will be scheduled based on projected casualty estimates and may be adjusted based on the Class VIII supply requirements identified by the BSS and availability of platforms for shipment. While resupply by preconfigured Class VIII packages is intended to provide support during the initial phase, continuation on an exception basis may be dictated by operational needs. Planning for such a contingency must be coordinated with the BSS and the HSMO of the BSB support operations section. The MEDLOG packages should continue until line item requisitioning can be established. A combination of line item requisitioning and preplanned Class VIII packages could be the resupply method. All IBCT medical units will deploy with enough supplies to support a 96-hour self-sustainment mission within the AO.

b. Resupply of the BSMC will be conducted by electronic requisitions sent to the supporting MEDLOG activity. This could be either a Joint, Army, or home station MEDLOG activity (Reach). If the BSMC is supported by a corps MEDLOG company, requisitions will be sent to that supporting MEDLOG company. Class VIII resupply will flow via the battlefield distribution system. It is important to note that if required, BSMC/BSB HSMO has the authority/capability to order directly from any supply support activity (SSA) located geographically in the operational area. The release orders for materiel will be processed by the MEDLOG company and shipped by the fastest appropriate transportation system to the IBCT. Corps-level DS medical units/elements will forward Class VIII requisitions through the BSMC CHL element.

c. Unique to the IBCT is the range and complexity of CHL support. The probability of corps-level CHS (surgery, hospitalization, intensive care, and extensive blood usage) within the IBCT footprint will result in a significant increase in the variety and urgency of medical supplies and equipment. Priority of transportation of critical Class VIII materiel will have to be recognized and supported throughout the distribution system. Blood support to the operation will follow the same procedures.

F-22. Health Service Materiel Officer

a. The HSMO of the BSB support operations section oversees and manages the Class VIII supply system in the IBCT. The HSMO will coordinate all Class VIII requirements for the IBCT with the supporting MEDLOG activity as appropriate. The HSMO tracks critical Class VIII shortages and in coordination with the BSMC and the BSS, recommends the priority for their requisition and delivery. The HSMO also coordinates for the disposition of captured enemy medical materiel. The HSMO and the BSS together manage all CHL issues and operations within the IBCT.

b. Management of the IBCT Class VIII authorized stockage list (ASL) is the responsibility of the HSMO as directed by the brigade surgeon. The ASL will be maintained and published by the HSMO. Changes, additions, and deletions to the ASL will be forwarded through the HSMO, with final approval authority being the brigade surgeon. The BSMC CHL element is responsible for physical control, maintenance, and supply operations associated with the ASL.

F-23. Functional Combat Health Logistics Module Business Systems

Class VIII automation management in the IBCT is accomplished by medical units/elements through the use of the software application of the TMIP/MC4 system (when fielded). The TMIP/MC4 system provides division/brigade medical units/elements a direct link with the supporting MEDLOG activity.

F-24. Class VIII Requisitioning in the Brigade

a. *Routine (Nondigital)*. Routine requisitions for Class VIII supplies are submitted to the BSMC using a DA Form 2765-1, Request for Issue or Turn-in, for each item or TSOP. The BSMC may fill these requests or forward them to the supporting MEDLOG activity. The BSMC coordinates the delivery of Class VIII supplies to the requesting unit through the BSB support operations section (HSMO) or issues the

items through supply point distribution. Class VIII deliveries coordinated through the support operations section will be included in the daily LOGPAC deliveries. Requisitions may also be sent via FBCB2, SINCGARS, or by using a sneaker net method (placing the requisitions on a floppy disk and having it hand-carried to the BSMC). Prior to deployment, medical platoon personnel should know the Class VIII requisitioning requirements and procedures.

b. *Digital Request*. When fielded, the CHL module of TMIP/MC4 will be used by Echelon II and below medical units/elements found at division- and brigade-levels. The maneuver battalion medical platoon and the BSMC will use this system for digital requisition of Class VIII materiel. The CHL functional module of TMIP/MC4 system is capable of assemblage management, to include replenishment and quality control for all MESs for all medical unit/elements. The MC4/TMIP system will also be used for individual line-item requisitioning and employ automated receipt updating to expedite issue. The reports section of the CHL functional module of the MC4/TMIP will produce equipment on hand (EOH) percentages that are used in unit status reporting.

c. *Emergency Request*. Emergency requisitions for Class VIII supplies are sent to the BSMC via radio, telephone, or hand delivered. Any item not filled is immediately forwarded to the supporting MEDLOG activity. The BSMC's CHL element in coordination with the HSMO will expedite handling of this request to ensure tracking of critical Class VIII items and timely delivery. All emergency requests received by the MEDLOG activity are processed for shipment by the most expedient transportation available. Delivery of emergency requests will be by the most expedient mode of transportation, based on METT-TC factors.

F-25. Medical Maintenance

Medical maintenance will consist of operator-/user-level maintenance. See FM 4-02.1 for additional information. Medical platoon personnel will exercise their responsibilities by performing operator PMCS. This includes maintaining equipment by performing routine services like cleaning, dusting, washing, and checking for frayed cables, loose hardware, and cracked or rotting seals. In addition, medical platoon personnel will—

- Perform equipment operational testing.

- Replace operator-level spares and repair parts that will not require extensive disassembly of the end item, critical adjustment after the replacement, or extensive use of tools.

The HSMO coordinates medical equipment replacement requisition with the supporting MEDLOG activity.

F-26. Property Exchange

When patients are evacuated to and from the BSMC, property exchange will occur between the BSMC's ambulances and the supporting or supported elements to prevent unnecessary depletion of items. Whenever a patient is evacuated from one MTF to another or is transferred from one ambulance to another, medical

items of equipment (casualty evacuation bags [cold weather-type bags], blankets, litters, and splints) remain with the patient. To prevent rapid and unnecessary depletion of supplies and equipment, the receiving Army element exchanges like property with the transferring element. This reciprocal procedure will be practiced to the fullest extent possible through all phases of evacuation from the most forward element through the most rearward hospital.

F-27. Delivery of Class VIII Supplies

a. Class VIII and blood to the BSMC will be shipped from the supporting MEDLOG activity to the BSMC via the battle distribution system.

b. Delivery of Class VIII supplies to requesting medical elements in the IBCT is accomplished by LOGPACs. Shipment of Class VIII resupply from the BSMC is coordinated with the BSB support operations section and the BSS. Working through the HSMO of the BSB support operations section, the BSMC MEDLOG element ensures requested Class VIII is shipped via LOGPAC to the appropriate unit. In some cases, delivery of medical materiel within the IBCT may also be achieved through use of the directed Class VIII resupply using returning air or ground backhaul resources that are returning to an IBCT unit. Emergency Class VIII resupply will be processed for shipment by the most expedient means available. Based on casualty estimates, medical push-packages may be pre-positioned with maneuver battalion medical platoons or with the BSMC. Figure F-15 provides an overview of Class VIII requisitions and resupply flow at Echelon I.

F-28. Blood Management

Blood for the IBCT is only used at Echelon II MTFs (BSMC and FST). The brigade surgeon determines blood requirements. Only packed liquid red blood cells are expected to be available to the brigade. Blood products are shipped directly to the BSMC by the blood support detachment of the MEDLOG battalion. The BSB HSMO coordinates with the blood support detachment for blood requirements. Shipment of blood from EAB to the IBCT is coordinated by the blood support detachment with the EAB MCO/movement control center. It is then transported to the requesting MTF by dedicated medical vehicles (air and ground). The blood support detachment notifies the BSB HSMO when blood is shipped. Emergency resupply can be accomplished by air ambulances from the medical battalion, evacuation, or by medical personnel on nonstandard medical transports. See FMs 8-10, 8-10-9, and 8-55 and TM 8-227-12 for definitive information on blood management.

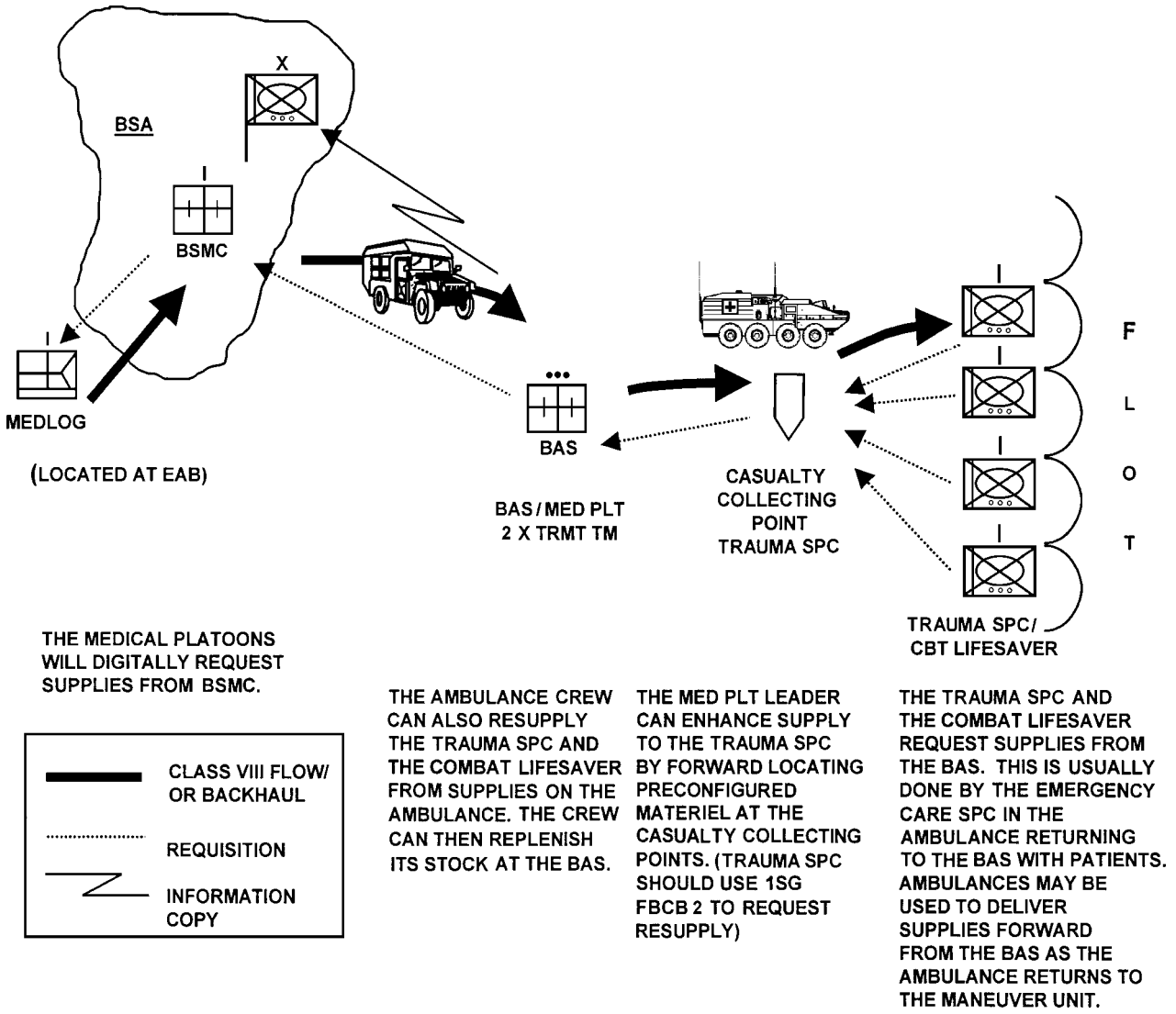

Figure F-15. Overview of Class VIII resupply at Echelon I.

APPENDIX G

TACTICAL STANDING OPERATING PROCEDURE

G-1. General

This appendix provides a sample TSOP format for a medical company. The information on the clinical aspects of the treatment and evacuation elements can be included in the TSOP or prepared separately as a clinical standing operating procedure (CSOP) (Appendix H). This sample TSOP should not be considered as all-inclusive. However, this information and the unit mission training plan are good starting points for developing the TSOP. It may be supplemented with information and procedures required for operating within a particular command.

G-2. Purpose of the Tactical Standing Operating Procedure

The TSOP prescribes policy, guidance, and procedures for the routine tactical operations of a specific unit. It should cover broad areas of unit operations but be sufficiently detailed to provide newly assigned personnel the guidance required for them to assume their new positions. A TSOP may be modified by TSOPs and OPLANs/OPORDs of higher headquarters. It applies to a specific unit and all subordinate units assigned and attached. Should a TSOP not conform to the TSOP of the higher headquarters, the higher headquarters' TSOP governs. The TSOP should be periodically reviewed and updated as required.

G-3. Format for the Tactical Standing Operating Procedure

a. There is not a standard format for all TSOPs; however, it is recommended that the unit's TSOP follow the format used by its higher headquarters. The TSOP can be divided into sections (specific functional areas or major operational areas). The TSOP can contain one or more annexes, each of which may have one or more appendixes. The appendixes may each have one or more tabs. Appendixes can be used to provide detailed information on major subdivisions of the annex and tabs can be used to provide additional information (such as report formats or area layouts) addressed in the appendix.

b. Regardless of the format used, the TSOP should follow a logical sequence in the presentation of material. As a minimum, it should discuss the—

- Chain of command.
- Major functions and staff sections of the unit.
- Operational requirements.
- Required reports.
- Necessary coordination with higher and subordinate elements for mission accomplishment.
- Programs (such as command information, PVNTMED measures, and CSC).
- Other relevant topics.

c. Pagination of the TSOP can be accomplished by starting with page 1 and numbering the remaining pages sequentially. If the TSOP is subdivided into sections, annexes, appendixes, and tabs, a numbering system that clearly identifies the location of the page within the document can be used. Annexes are identified by letters and are listed alphabetically. Appendixes are identified by numbers and arranged sequentially within a particular annex. Tabs are identified by a letter and are listed alphabetically within a specific appendix. After numbering the initial sections using the standard numbering system (sequentially starting with page 1 through to the end of the sections), then beginning with the annexes and their subdivisions, they are numbered as the letter of the annex, the number of the appendix, the letter of the tab, and the page number. For example, page 4 of Annex D is written as "D-4"; page 2 of Appendix 3 to Annex D is written as "D-3-2"; page 5 of Tab A to Appendix 3 of Annex D is written as "D-3-A-5". This system of numbering makes the pages readily identifiable as to their place within the document.

d. In addition to using a numbering system to identify specific pages within the TSOP, descriptive headings should be used on all pages to identify subordinate elements of the TSOP.

(1) The first page of the TSOP should be prepared on the unit's letterhead. The remaining pages of the major sections should include the unit identification in the upper right hand corner of the page (for example: "____Medical Company").

(2) A sample heading for an annex is: "ANNEX C (Administration and Personnel) to ____Medical Company."

(3) A sample heading for an appendix is: "APPENDIX 2 (Personnel Management) to ANNEX C (Administration and Personnel) to ____Medical Company."

(4) A sample heading for a tab is: "TAB A (Award Recommendations) to APPENDIX 2 (Personnel Management) to ANNEX C (Administration and Personnel) to ____Medical Company."

e. As the TSOP is developed there may be an overlap of material from one annex to another. This is due in part to similar functions that are common to two or more unit elements. Where overlaps occur, the material presented should not be contradictory. All discrepancies will be resolved prior to the authentication and publication of the TSOP.

G-4. Sample Tactical Standing Operating Procedure (Sections)

The information contained in this paragraph can be supplemented. It is not intended to be an all-inclusive listing. Different commands will have unique requirements that need to be included.

a. The first section of the TSOP identifies the unit that developed it.

(1) *Scope*. This document establishes and prescribes procedures to be followed by the designated unit and its assigned, attached, or OPCON units/elements.

(2) *Purpose*. This document provides policy and guidance for routine tactical operations of this unit and its assigned, attached, or OPCON units.

(3) *Applicability*. Except when modified by TSOPs and OPLANs/OPORDs of higher headquarters, this document applies to this unit and to all assigned, attached, or OPCON elements/units for combat operations. In cases of nonconformity, the document of the higher headquarters governs.

(4) *References*. This paragraph can include any pertinent regulations, policy letters, higher headquarters TSOP, or other appropriate documents.

(5) *General information*. This paragraph discusses the required state of readiness of the unit; primary, secondary, and contingency missions; procedures for operating within another command's AO; and procedures for resolution of conflicts with governing regulations, policies, and procedures.

b. The second section of the TSOP discusses the unit's organization.

(1) *Organization*. This unit is organized and equipped in accordance with the applicable MTOE.

(2) *Task organization*. Task organization is contingent on the mission and is approved by the headquarters ordering deployment.

(3) *Organizational charts*. Contained in Annex A.

c. The third section of the TSOP discusses the unit functions.

(1) *Company headquarters*. The unit provides Echelons I and II medical care to supported units and area support medical care to those units operating in the AO without organic CHS resources. The company headquarters supervises movements, internal arrangements, area layout, physical security, and operation of the unit.

(2) *Ground and air ambulances (to include attached, assigned, or OPCON of corps evacuation elements*). These provide medical evacuation of patients; emergency movement of whole blood, biologicals, and medical supplies; transportation of medical personnel and equipment; and serve as messengers in medical channels.

(3) *Staff responsibilities*. This paragraph lists the unit's key personnel and their duties as prescribed in FMs 8-10 and 101-5 and any command-directed duties.

d. The fourth section of the TSOP pertains to staff operations and is subdivided into annexes.

G-5. Sample Tactical Standing Operating Procedure (Annexes)

Annexes are used to provide detailed information on a particular function or area of responsibility. The commander determines the level of detail required for the TSOP. Depending upon the complexity of the material to be presented, the annex may be further subdivided into appendixes and tabs. If the annex contains broad guidance or does not provide formats for required reports, paragraphs may be used and the

annex need not be further subdivided. However, as the material presented becomes more complex, prescribes formats, or contains graphic material, the annex will require additional subdivision. This paragraph discusses the subdivision of the annex by appendixes. It does not contain examples of subdividing into tabs the information presented in the appendixes. Applicable references, such as ARs, FMs, and TMs, should be provided in each annex. The number of annexes and their subdivisions presented below are not to be considered as an all-inclusive listing. Different commands will have unique requirements; therefore, supplementation of the information presented is permitted.

a. *Annex A*. (*Organizational Charts*).

b. *Annex B*. (*Command Post*).

(1) *General*. The company may operate a CP depending on the mission and tactical situation. Personnel staffing of the CP is tailored to plan, coordinate, and provide C2 of assigned, attached, and OPCON elements. The area location for the CP is selected by the commander; he also designates who will staff it. Staffing usually consists of the commander and/or XO, 1SG, communications personnel, and NBC NCO, if assigned.

(2) *Camouflage*. This appendix discusses what camouflage procedures are required to include—

- Type and amount of required camouflage materials (such as nets and shrubs).
- Display of the Geneva Conventions distinctive emblem on facilities, vehicles, and aircraft on the ground (STANAG 2931).
- Other pertinent policies, guidance, or procedures.

(3) *Message distribution*. This establishes procedures for the handling of messages (both classified and unclassified); provides procedures for picking up and delivering messages; and establishes procedures for preparing outgoing messages.

c. *Annex C*. (*Human Resources Support*). This annex outlines procedures relating to human resources support and associated activities. The battalion S1 has primary responsibility for providing and coordinating all human resources support functions, usually via the intermediate staging base or through reach operations. These functions include manning, personnel services, personnel support, and personnel information management. (Field Manual 12-6 is the capstone manual on personnel doctrine and should be used for developing specific operational plans and standard operating procedures.)

(1) *Personnel accounting and strength reporting*. Personnel accounting and strength reporting is a critical function and is primarily conducted via Personnel Situation Report (PERSITREP) from the unit to the battalion S1. For nondigitized units, other reports available for use are battle rosters, personnel summary, and personnel requirements reports.

(2) *Replacement management*. Individual replacements will not be readily available during the initial phases of operations. The battalion S1 automatically initiates replacement requests for personnel

who are reported on the PERSITREP as wounded in action (WIA), missing in action (MIA), or killed in action (KIA).

(3) *Casualty operations management*. Casualty operations management includes the recording, reporting, verification, and processing of information from the unit level. Casualty operations require 100 percent personnel accounting reconciliation. All commanders, soldiers, and deployed civilians must be sensitive to the accuracy and sensitive nature of casualty information. Casualty reports will be submitted to the battalion S1 on DA Form 1155/1156 within 24 hours of incident.

(4) *Personnel accountability*.

- *Personnel Daily Summary*. This appendix provides the procedures for preparing and submitting a Personnel Daily Summary (PDS) report. The instructions may include requirements for encrypting the report prior to transmission, specific guidance on time of submission, corrections, or other administrative details.

- *Casualty Feeder Report*. This report is submitted on DA Form 1155/1156. Instructions on the completion of the form and submission requirements are included.

- *Witness statements on individuals*. This statement needs to be completed only when the recovery of a body is not possible or cannot be identified. It should be submitted to the battalion S1 within 24 hours of the incident. The procedure should contain information on obtaining the form, instructions for completing it, and other relevant information.

(5) *Personnel management*.

- *Replacements*. Individual replacements will not be readily available during the initial phases of operations. The battalion S1 automatically initiates replacement requests for personnel who are reported on the PDS report as WIA, MIA, or KIA.

- *Personnel actions*. All personnel actions are channeled through the battalion S1. The company XO and 1SG are the company points of contact. Actions are handled expeditiously and meet suspense dates (tactical situation permitting).

- *Efficiency reports*. This paragraph provides pertinent information on the completion and submission of these reports.

- *Award recommendations*. This paragraph delineates the responsibilities for and guidance concerning the submission of recommendations for awards and for scheduling and conducting award ceremonies.

- *Promotions*. This paragraph discusses the procedures for submitting recommendations for promotion and conducting promotion ceremonies.

- *Correspondence*. All correspondence addressed to higher headquarters is submitted through the battalion S1. Requirements for submission, preparation, and approval are also provided.

- *Personnel records*. This paragraph discusses requirements for coordination for this support and the procedures for having correspondence included in the official military personnel files of personnel assigned and attached.

(6) *Personnel services*. Personnel services are those activities pertaining to soldiers as individuals. Unless prohibited by the tactical situation, the services listed below are normally available to all assigned and attached elements.

- *Sporting activities and morale and welfare activities*.

- *American Red Cross*.

- *Finance*. Finance units provide individual and organizational support on an area basis. Individual support includes casual payments, check cashing, currency conversion, and pay inquiries. Organizational support covers contracting support and commercial vendor operations and reimbursement of impress fund cashiers and Class A Agent. Before deployment, units will have officer appointments prepared and be trained for Class A Agent duties.

- *Legal services*. Information and guidance on administrative boards, court-martial authority and jurisdiction, legal assistance, and general services should be provided.

- *Religious activities*. Religious activities include unit ministry teams, services available from different faiths, schedule of services, and hospital visitations.

- *Postal services*. This includes hours of operation and services available.

- *Post exchange services*. This includes hours of operation and availability.

- *Distribution*. Pick up and delivery schedules and any command-specific issues and procedures are provided.

(7) *Mortuary affairs*. Commanders at all levels are responsible for the recovery, identification, and evacuation of US dead. This section discusses the responsibilities and procedures for unit-level MA activities for assigned and attached personnel.

- *Responsibilities*. This paragraph discusses unit requirements.

- *Disposition*. Guidance on graves registration procedures, collection points, transportation requirements, and the handling of remains are provided.

- *Hasty burials*. Requirements for conducting hasty burials, marking the grave, and reporting the location of the grave site are included.

- *Personal effects*. Guidance on the accounting for personal effects and requirements should a hasty burial be required.

• *Disposition of civilian and EPW remains*. The local civilian government is responsible for burial of remains of their citizens. The burial of the remains of EPW should be accomplished in separate cemeteries from US, allied, and coalition personnel. If this is not possible, separate sections of the same cemetery should be used.

• *Contaminated remains*. This paragraph discusses the handling and disposition requirements (including protective clothing), procedures, and marking and reporting of the contaminated burial site.

(8) *Public information*. This paragraph contains procedures for obtaining approval on the public release of information.

(9) *Maintenance of law, order, and discipline*. This appendix should provide applicable regulations, policy, and command guidance on topics such as serious incident reports, notifications, and submission format, straggler control, confinement of military prisoners, and EPW.

(10) *Enemy prisoners of war*. This appendix discusses the responsibilities of EPW surrendered to the medical unit. (These procedures DO NOT pertain to EPW patients captured by other units. Medical personnel DO NOT guard, search, or interrogate EPW while they are in the CHS channels; guards are provided by nonmedical personnel designated by the tactical commander for these duties.) Until EPW personnel can be evacuated to an EPW collection point, medical personnel should remember and enforce the soldier basic skills: segregate, safeguard, silence, secure, and speed. (The speed portion of evacuating EPW to designated collection points is of paramount importance to medical units.)

NOTE

The treatment of EPW is governed by international and US law and the provisions of the Geneva Conventions. Personnel should be aware of these requirements and have ready access to the applicable regulations and policy guidance.

d. Annex D. (Intelligence and Security). This annex pertains to intelligence requirements and procedures and OPSEC considerations.

(1) *Intelligence*. Intelligence requirements are submitted to the battalion Intelligence Officer (US Army, S2). These requirements include the essential elements of information, commander's critical intelligence requirements, medical threat, and other intelligence information/products.

(2) *Counterintelligence*. This appendix discusses camouflage, COMSEC, signals and countersigns, SOI, and document security.

(3) *Weather*.

(4) *Captured personnel, equipment, supplies, and documents*. This appendix provides guidance on the procedures required for disposition of these personnel, equipment, supplies, and documents. The Geneva Conventions have a specific bearing on this area.

(5) *Security*. Security issues, such as weapons security, checkpoints, SOI, required reports, and escape and evasion training requirements, are included.

e. *Annex E. (Operations)*. This annex establishes procedures for company operations on issues such as readiness levels, threat levels, warning levels, camouflage, security, and area damage control.

(1) *Operational situation report*. Report requirements for format, preparation, and submission are discussed.

(2) *Operations security*. This appendix provides guidance and procedures for secure planning and conduct of combat operations.

(3) *Operations security countermeasures*. This appendix discusses camouflage, light discipline, physical information, and signal security.

(4) *Communications-electronics*. This appendix establishes communications policies, procedures, and responsibilities for the installation, operation, and maintenance of CE equipment.

- Concept of operations.
- Radio communications.
- Command and control.
- Radio teletypewriter communications.
- Message/communications center service.
- Message handling.
- Wire communications.
- Switchboard operations.
- Communications security and operations.
- Intelligence security.
- Meaconing, intrusion, jamming, and interference reporting and CE countermeasures.

- Security violations.
- Daily shift inventory.
- Physical security.
- Security areas.
- Inventory of classified materials.
- Safety.
- Power units.

(5) *Rear battle responsibilities*. This appendix discusses rear battle responsibilities, task organization, and CHS for reaction/response forces.

(6) *Unit location update*. This appendix provides timely information on the location of main and forward CPs, MSRs, and POL points.

f. *Annex F*. *(Unit Layout)*. This appendix discusses the establishment and breakdown of the unit area. As this is a medical company, a smooth and even flow of patients through the treatment areas is necessary.

(1) *Site selection*. This appendix provides information on considerations for site selection, such as amount of terrain required, drainage, and coordination requirements.

(2) *Establishment of treatment areas*. This can be graphically displayed.

(3) *Establishment of area for the handling of contaminated patients*. This can be graphically displayed.

(4) *Establishment of administrative areas and motor pool*. This can be graphically displayed.

g. *Annex G*. *(Nuclear, Biological, and Chemical Defense)*. This annex prescribes the policy, guidance, and procedures for NBC defensive measures.

(1) Responsibilities.

(2) Nuclear, biological, and chemical reporting requirements and procedures.

- Contamination avoidance.
- Protection. Protection pertains to those measures each soldier must take before, during, and after an NBC attack to survive and continue the mission.

- Decontamination. This discusses equipment requirements, procedures, types of decontamination (such as hasty), and patient decontamination.

- Mission-oriented protection posture. This appendix provides guidance on garments required for the different MOPP levels and identification procedures for personnel in MOPP.

- Operational exposure guidance. This appendix contains guidance that establishes the permissible radiation exposure level for the operation. It discusses determining what constitutes a radiologic hazard; prescribes acceptable limits of potential casualty-producing doses of radiation, minimizing exposure, and protecting against electromagnetic pulses.

- Masking and unmasking procedures.

- Radiological monitoring and survey operations.

h. *Annex H*. *(Logistics*). This annex establishes logistics procedures for the company.

(1) *General supply and services*. A discussion of the applicability, responsibilities, policy, classes of supply, requisition and delivery procedures, hours of operation, and other supply relevant topics and available services (such as laundry and bath) can be addressed in this section.

(2) *Combat health logistics support*. The CHL concept of operations, requisition and distribution procedures, accountability, and reports are provided in this appendix.

(3) *Food service*. This appendix discusses responsibilities, hours of operation, Class I supplies, sanitation requirements, layout of field kitchen, fuel storage, maintenance, safety precautions, and administration (such as head counts, meals, ready to eat, and inspections). (If the field feeding function is consolidated at battalion level, this annex would detail support and coordination requirements for the field feeding operation.)

(4) *Transportation and movement requirements*. The appendix may cover the following areas: applicability; responsibilities; policies on speed, vehicle markings, transporting flammable materials, transporting ammunition and weapons, and so on; convoy procedures; safety; and accident reporting.

(5) *Fire prevention and protection*. This annex provides guidance on—

- Use of the tent stove and flammable materials.

- Use of cigarettes, matches, and lighters.

- Operation or use of electrical wiring and appliances.

- Safety of tents and occupants.

- Spacing of tents, stoves, and ranges.

- Installation of British thermal units heaters.
- Availability of fire-fighting equipment.

(6) *Field hygiene and sanitation*. This appendix provides uniform guidance and procedures for the performance of functions related to field hygiene and sanitation. It includes the following topics:

- Communicable disease control.
- Field sanitation team.
- Field water supply, water containers and cans, and water purification bags and procedures.
- Food sanitation.
- Latrines.
- Liquid waste, garbage, and rubbish disposal.

(7) *Conventional ammunition download and upload procedures*. This appendix delineates responsibilities and provides guidance and procedures for the requisition, storage, and distribution of ammunition and weapons, reporting requirements, and safety. It also includes procedures for securing patient weapons and organization equipment while the patient is being held or evacuated.

(8) *Petroleum, oils, and lubricants accounting*.

(9) *Maintenance*. This appendix includes information on the maintenance requirements of the company and the location and hours of operation of maintenance units and collection points. Maintenance for medical equipment, vehicles, and communications and other categories of equipment are discussed.

i. *Annex I*. *(Safety)*. This annex establishes minimum essential safety guidance for the unit. It includes—

- Accident reporting.
- Safety measures.
- Emergency procedures.
- Vehicle safety.
- Ground guide procedures.
- Fire prevention and protection.

- Climate and survival training.
- Animal and arthropod hazards.
- Personal protective measures.
- Hearing conservation program.
- Threat of carbon monoxide poisoning.

j. *Annex J*. (*Civil-Military Operations* [*CMO*]). This annex discusses participation in CMO. Medical elements are often involved in CMO, humanitarian assistance, and disaster relief operations. The activities that may be covered include—

- Providing DS for medical evacuation.
- Providing guidance on developing a medical infrastructure in a HN.
- Providing training to HN personnel.

k. *Annex K*. *Clearing Station Clinical Activities*. Refer to the CSOP (Appendix H.)

APPENDIX H

CLINICAL STANDING OPERATING PROCEDURE

H-1. General

a. This appendix provides a sample CSOP for use within a clearing station. It is different than the TSOP as it focuses on the clinical aspects of the unit's operation.

b. Appendix G contains information on the format of the TSOP. This format may also be used when developing the CSOP, if desired.

c. The sample CSOP provided in this appendix is merely an outline and should not be considered as all-inclusive. The information contained in this sample is not sufficiently detailed to enable a unit to implement the CSOP as it is written. The addition of treatment protocols, command guidance, clearing station policies, and other pertinent regulations, directives, and procedures is required.

H-2. Purpose of the Clinical Standing Operating Procedure

a. This CSOP prescribes policy and provides guidance on the routine operation of patient treatment and support elements within the clearing station. Each clinical element is required to develop, maintain, and update their CSOP.

b. Once completed, it is reviewed and approved by the senior clinician.

c. The content of the CSOP should not contradict or impede the implementation of the TSOP. Should differences in the two documents occur, they are to be resolved by the commander.

H-3. Sample Clinical Standing Operating Procedure

a. *Treatment Platoon*. The following topics should be considered:

(1) *Treatment section*.

- Triage procedures.
- Treatment protocols.
- Routine and emergency patient care management.
- Staffing, length of shift, and relief procedures and requirements.
- Controlled substance procedures and records.
- Coordination requirements with the patient administration specialist, to include medical evacuations, release of RTD, and maintenance of the field individual medical records (including disposition of the FMC).

- Coordination for radiology and medical laboratory services, to include blood and blood products.

- Procedures for the collection and safeguarding of weapons, munitions, and sensitive military equipment which may arrive with patients.

- Policy on disposition of patient's personal protective gear (such as mask and MOPP overgarments).

- Logistic requirements and procedures for obtaining supply/resupply (both general and medical), to include property exchange (litters and blankets).

- Notification requirements as directed by the commander.

- Death procedures.

- Scope of practice of MOS 91W personnel.

- Mass casualty operations (see paragraph *e* below.)

- Procedures for the disposal of medical waste.

- Reporting of unusual occurrences.

- Policy and procedures for the care and treatment of nonmilitary personnel.

- Policy and procedures for the care and treatment of non-US personnel.

- Policy and procedures for the care and treatment of EPW.

- Medical evacuation, to include receiving patients arriving by helicopter and ground assets.

- Establishment of a triage area, to include a patient decontamination station, should contaminated casualties be evacuated to the facility.

- Supervision of nonmedical patient decontamination teams.

- Training and use of litter teams.

- Procedures for the release of medical information on patients.

- Coordination requirements for power generation and refrigeration capabilities, if required.

- Procedures for medical activities affected by the Uniformed Code of Military Justice (UCMJ) such as treating soldiers with self-inflicted wounds, rape, or other similar situations.

- Procedures for medical equipment maintenance.

- Safety.

- Fire evacuation plan.

(2) *Area support section*.

(*a*) *Area support treatment squad*. Same as (1) above.

(*b*) *Area support squad*. The following topics should be considered:

- Procedures for controlled substance inventory, dispensing requirements, registry, destruction procedures, discrepancy reports, and requisitions.

- Key control.

- Requirements for refrigeration support.

- Rotation of medication stocks.

- Preparation of required reports.

- Infection and chemical hazard control procedures.

- Procedures for obtaining specimens.

- Procedures and requirements for shipping specimens to more sophisticated laboratories.

- Procedures for medical waste disposal.

- Procedures for storing blood and blood products.

- Blood planning factors.

- Establishment of x-ray exposure area.

- Procedures for the operation of the darkroom.

- Film control procedures.

- Security.
- Radiation safety rules.
- Shielding of patients and medical personnel.
- Electrical and mechanical safety rules.
- Procedures for the performance of routine radiographic views.
- Accomplishment of weekly processor tests.
- Establishing quality control procedures.
- Maintenance of equipment records.
- Procedures for disposition of radiographs.
- Dental protocols and procedures.
- Procedures for personal protection (gloves, masks) measures during dental procedures.

(*c*) *Patient-holding squad*. The following topics should be considered:

- Scope of nursing practice (MOS 91W [M-6]).
- Patient accountability.
- Shift change policies and procedures.
- Holding area staffing.
- Establishment of methods and procedures for documentation.
- Establishment of infection control procedures.
- Care for injection sites and IV treatments.
- Maintenance of equipment.
- Establishment of bedpan and urinal washing procedures.
- Procedures for disinfecting facilities.

- Infectious waste disposal.
- Procedures for hand washing.
- Location and access to field sinks and latrines for both patients and staff.
- Controlled substance procedures and reports.
- Death procedures to include notifications, as required.
- Preparing required reports.
- Procedures for taking hold patients to field feeding site(s).

NOTE

Patients requiring modified diets are evacuated to corps/COMMZ hospitals where both patient rations (Medical B Rations) and personnel trained in providing modified diets (MOS 91M) are available. Patients held in the holding squad are normally ambulatory and on a regular diet and may require minimal assistance in obtaining rations.

b. *Ambulance Platoon*. The following topics should be considered:

- Procedures for inspecting and maintaining medical equipment sets.
- Procedures for the supply/resupply of medical supplies and equipment.
- Treatment protocols for the provision of en route medical care.
- Protocols for the use of pneumatic anti-shock trousers.
- Procedures for the rotation of medication stocks.
- Procedures for the property exchange (litters and blankets).
- Procedures for mass casualty situations, to include the use of ambulance shuttles.
- Procedures for staffing AXPs, if required.

- Procedures for the evacuation of outpatient treatment to the next echelon care and RTD.

c. *Augmentation*.

(1) *Surgical*.

- Surgical procedures, to include emergency surgeries.
- Operating room staffing, to include duty rosters and on-call rosters.
- Aseptic technique practices.
- Procedures for preparation of the maintenance register.
- Preparation of the patient for surgery.
- Emergency blood requests.
- Sterile instruments and supplies.
- Treatment protocols for medical emergencies, such as for anaphylaxis reaction.
- Provision of immediate postoperative care (inpatient holding area). (Registered nurses are part of the augmentation).
- Scrub attire and surgical hand-scrub procedures.
- Environmental safety.
- Medical waste disposal procedures.
- Operating room sanitation.
- Patient deaths, to include notifications requirements.
- Procedures for performing cardiac arrest procedures.
- Procedures for handling contaminated sharps.
- Preparation of required reports.
- Equipment checklists.
- Inventory and maintenance of controlled substances.

- Infection control procedures.
- Combustibles and cleaning products storage.
- Quality control procedures for equipment.

(2) *Combat operational stress control*. The following topics should be considered:

- Procedures for segregating battle fatigue casualties from other patients being held.
- Patient accountability procedures.
- Procedures for ensuring sufficient holding capability is available.
- Delineation of responsibilities and actions required of the combat stress control personnel in the management of their patients.
- Procedures for arranging transportation for battle fatigue casualties (BFC).

d. *Temporary Morgue Area*.

- Site selection for this area to ensure adequate shielding from other patients.
- Establish procedures for the management of this area and the immediate arrangement for collection of remains by mortuary affairs personnel. (See FM 8-10-6, Chapter 4 for initiating the FMC on decease personnel.)

e. *Mass Casualty Situations*. When mass casualty situations occur, all nonessential patient care activities and support services (such as logistic and personnel) are temporarily suspended. The traffic patterns within the MTF are also temporarily changed and marked in order to move patients to holding and treatment areas based on their medical condition and assigned treatment precedence. Other activities include—

- Establishment of a control cell to coordinate hospital activities.
- Establishment of the triage area. (Normally a senior NCO or medical officer performs the triage function.)
- Establishment of a patient decontamination station, if required. (This includes supervising the patient decontamination process performed by nonmedical personnel.)
- Patient triage and assignment of a treatment precedence.
- Establishment of a litter bearer pool of nonmedical personnel. (These teams will move patients from evacuation vehicles to the triage point and within the MTF to the various diagnostic and treatment areas.)

- Internal patient movements to appropriate holding and treatment areas based on their assigned precedence for treatment, monitoring, or observation.

- Internal traffic pattern to ensure a smooth patient flow without having to overlap and/or retrace traffic patterns.

- Procedures for limiting access to MTF area by visitors or other nonessential personnel.

- Provision of updates on the medical situation periodically and through a central point.

f. *Patient Support Services*.

(1) *Logistics*. The logistics SOP can be addressed in either the CSOP or the TSOP, or it may be addressed in both with emphasis on the health service logistics portion in the CSOP. Logistics functions include—

- Inventory control procedures and preparation of requisitions.

- Procedures for maintenance and repairs on medical equipment.

- Coordination for repairs that cannot be accomplished by organic capability.

- Pickup and delivery of medical supplies to include controlled substances.

- Property exchange procedures.

- Coordination for waste disposal, to include medical waste.

- Coordination for pest management support.

- Coordination for laundry and bath services.

(2) *Patient administration*.

- Procedures for the maintenance of individual field medical records.

- Compilation of medical statistics and preparation of reports.

- Coordination for medical evacuation support.

- Policies regarding the inventorying and safeguarding of patient property and weapons.

APPENDIX I

COMMUNICATIONS, AUTOMATION, AND POSITION NAVIGATION SYSTEMS

Section I. COMMUNICATIONS AND EQUIPMENT

I-1. General

Communications systems are essential for gathering and disseminating data. Commanders use them to perform C2 functions and to supervise performance. Effective management of CHS functions depends on adequate communications to keep abreast of changing situations and requirements. The medical company relies on both its organic communications assets and the support assets of its parent unit and signal elements of the division and/or corps.

I-2. Frequency-Modulated Radios

Frequency-modulated, AM and single-channel tactical satellite (SCTACSAT) radios comprise the family of radios discussed in this appendix as combat net radios (CNRs). When discussing the operational facility rules for the medical company, the SINCGARS radios constitute the FM slice; the improved high-frequency radio (IHFR) and the Harris Corporation commercial radios constitute the AM component; the AN/PSC-5 fills the SCTACSAT requirement; and the near-term digital radio is a TOC to TOC data hauler.

a. *Single Channel Ground and Airborne Radio System*. The SINCGARS radios (AN/PRC-119 and AN/VRC-87F, -88F, -89F, and -90F) operate in the 30- to 88-megahertz (MHz) frequency range (the very high-frequency [VHF] band) in 25-kilohertz (kHz) segments for a total of 2,320 channels. They can operate in either a single-channel or frequency-hopping mode and have embedded communications security (COMSEC) for secure operations.

b. *AN/PRC-119*. The AN/PRC-119 is a short-range, manpacked radio designed for dismounted operations. It consists of a receiver-transmitter (RT), an antenna, a handset, and a battery box. The system uses rechargeable or nonrechargeable batteries with each lasting approximately 8 hours, depending on usage.

c. *AN/VRC-88F/87F*. The AN/VRC-88F is a short-range, vehicular-mounted radio, which has an antenna and a battery case as additional components. The radio can be removed from the vehicle and can be reconfigured as the AN/PRC-119 manpack radio by installing the antenna and the battery case. It consists of one RT, a radio mount, a mounting adapter, a vehicular antenna, and associated handset and cabling. The AN/VRC-87F radio is identical, except without the dismounted capability/components. The radio has an 8-km range. Treatment Team B normally uses this radio.

d. *AN/VRC-89F*. The AN/VRC-89F radio is a vehicular-mounted, dual configuration radio consisting of one short-range and one long-range RT mounted in a single vehicular mount. It is basically two vehicular-mounted, short-range radio sets with an added power amplifier that provides one of the radio sets with a long-range communications capability up to 35 km. This radio is normally used by the medical company/troop CP, company/troop commander, and treatment squads.

e. *AN/VRC-90F*. The AN/VRC-90F radio is a vehicular-mounted, single configuration radio, consisting of a long-range RT (RT plus power amperes) capable of operation up to 35 km. This radio is especially suitable for ambulance teams, PVNTMED sections, and company/troop commanders who require unimpeded, long-range communications.

I-3. Amplitude-Modulated Radios

The AM radios operate in the high-frequency band of 1.5 to 30 MHz. They can be operated in manpacked, vehicular, base station modes and have ranges from 0 to 2,000 miles. The systems in the AMEDD's inventory include the AN/GRC-106 (legacy system, not described), the AN/GRC-213, and the AN/GRC-246.

a. *AN/GRC-213* (*Improved High-Frequency Radio)*. The AN/GRC-213 is a low-power manpack or vehicular-mounted configuration of the IHFR system. It provides a reliable high frequency coverage with *voice only* capability of 2 to 30 MHz for medical troops/companies. It has the capability to pass secure medical C2 and CHS information over medium- to long-range distances. It also can be used over varying terrain features that would normally preclude the use of FM CNRs (SINCGARS).

b. *AN/GRC-246*. The AN/GRC-246 is a state-of-the-art digital signal processing RT providing upper sideband, lower sideband, continuous wave for Morse code, and AM equivalent operation over the 1.6- to 30-MHz frequency range. The configurations available are a 20-watt, manpacked version, a 125-watt vehicular version, and a 400-watt base station. The transceiver provides an impressive list of standard features, including active squelch, retransmission capability, and NVG compatibility. Built-in options include a high-speed 2400-baud data modem, a frequency shift keying data modem, automatic link establishment controller, digitized voice, and full remote control.

c. *AN/PSC-5*. The AN/PSC-5 SPITFIRE is a multiservice, nondevelopmental item/commercial off-the-shelf (COTS), small, lightweight, manpackable, single-channel, ultrahigh-frequency satellite communications (SATCOM) radio that includes embedded COMSEC, a 5/25 kHz demand assigned multiple access capability, line of sight communications, and SATCOM (voice and data). It has an extended frequency range of 30 to 400 MHz.

I-4. Ancillary Radio Equipment

The medical company/troop requires two main categories of ancillary equipment associated with its SINCGARS equipment. These are remote control devices and data fill/variable transfer and storage devices.

a. *Control Receiver-Transmitter (C11561)*. The control receiver/transmitter (CRT) C11561 provides SINCGARS vehicular radios with a remote capability of up to 4 km. It is able to remotely control all front panel controls on the radio. This CRT C11561 may also be adapted with detachable control panels for frequency hopping and COMSEC. The COMSEC and data adapter devices may be attached directly to the CRT for secure communications over the transmission line and optimal interface with digital data terminals. The CRT C11561 is an incremental change package for the medical company/troop. It will replace the AN/GRA-39, discussed below.

b. *Radio Set Control Group (AN/GRA-39)*. The AN/GRA-39, a legacy system is used to remote single channel radios. It is compatible with integrated and nonintegrated communications radios (integrated communications with embedded COMSEC and nonintegrated communications with external COMSEC). The AN/GRA-39 controls only remote keying of radios from a terminal set. The operator must set the other functions at the location of the radio.

c. *Data Fill Devices*. Data fill devices provide the capability to transfer the required frequency hopping and COMSEC variables from unit to unit. The medical company/troop is authorized the following two devices for this requirement:

(1) *Automated net control device (AN/CYZ-10)*. The automated net control device (ANCD) is a handheld device capable of receiving, storing and transferring data between compatible equipment. The primary application will be the transfer of variable length electronic keying material such as frequency hopping data, partial or complete SOI information, and other COMSEC variables. The ANCD is sufficiently programmable to replace and prevent the development of equipment tailored to a unique system. Interaction between the ANCD and the operator is via the 35-key keyboard and the 2- by 24-character window in the liquid crystal display. The emergence of ANCD replaces the need for the following fill devices:

- *Electronic counter-countermeasure fill device (MX-10579 or MX-18290)*. The MX-10579 is used with the nonintegrated communications radio only and the MX-18290 is used with both the integrated communications radios or the nonintegrated communications radios. The MX-10579 and the MX-18290 do not provide the capability to store or transfer COMSEC variables and SOI information.

- *Electronic notebook (AN/CYZ-7A)*. The electronic notebook (EN) is a small handheld data memory device similar to a small calculator. It can be loaded with partial or complete SOI information and frequency hopping variable. The EN replaces the need for paper SOI, but does not provide the capability to store and transfer COMSEC variables.

- *Cryptographic fill devices (KYX-13 and KYX-15/TSEC)*. The KYX-13 is a battery operated fill device that provides storage and transfer of up to 6 COMSEC variables. The KYX-15 is a battery-operated fill device that provides storage and transfer of up to 16 COMSEC variables, and provides the capability to create cryptographic variables. The KYX-13 and KYX-15 do not provide the capability to store or transfer frequency hopping data and SOI information.

(2) *Secure voice and FM communications devices*. The following are descriptions and applications of this equipment used by the company in its CNR operations:

(*a*) *Speech security equipment (KY-57)*. The KY-57 is a half-duplex, tactical wide band COMSEC device for FM radio equipment. This device permits secure radio transmissions and is required with legacy VRC-12 systems and nonintegrated communications SINCGARS radios (no internal COMSEC). Most SINCGARS used today have built in COMSEC (except avionics models) and do not require this device.

(*b*) *Net control device (KYX-15/TSEC)*. The net control device (NCD) KYX-15 is a battery-operated control device that provides for storage and transfer of 1 to 16 COMSEC variables. When

it is connected to COMSEC equipment, the KYX-15 performs the automatic remote keying function and other cryptovariable operations. The NCD KYX-15 is required by the NCSs operated by the medical company's CP, treatment platoon, and ambulance platoon for secure CNR operation.

I-5. Mobile Subscriber Equipment

Mobile subscriber equipment is the Area Common-User System (ACUS) for corps and below units. All medical companies are allocated several MSE telephones such as the DNVT (TA-1042/U); some are authorized the AN/UXC-7, tactical lightweight digital FAX. The DNVT is a prime subscriber terminal that provides full-duplex digital voice communications and a voltage reference signal for limited data use.

a. *Area Coverage*. The MSE system provides ACUS support to a geographic area, as opposed to dedicated support to a specific unit or customer. The hubs of the system are called nodes and are under the control of the corps signal officer.

b. *Subscriber Terminal (Fixed)*. The MSE telephone, mobile radiotelephone, FAXs, and data terminals (as part of the ACUS) are user-owned and operated. The using unit is responsible for running wire to the designated distribution boxes. Those boxes tie the medical company's MSE telephones into the extension switches, which access the system. The subscriber terminals used by the unit are digital, four-wire voice as well as data ports (DNVTs [TA-1042]) for interfacing with the AN/UXC-7 FAX and the medical transportable computer unit (MEDTCU).

c. *Wire Subscriber Access*.

(1) Wire subscriber access points provide the entry points (interface) between fixed subscriber terminal equipment and the MSE area system operated by the supporting signal unit. The two types of interface equipment are—

- The signal distribution panel J-1077 (each panel provides up to 13 subscriber access points).
- Remote multiplexer combiners (RMCs) that provide access for 8 subscriber access points.

(2) The medical company/troop is responsible for installing and operating fixed subscriber terminal instruments (DNVT TA-1042). It must also install and maintain the WF-16 field wire from the instruments to the interface point (J-1077 distribution panel).

I-6. Position/Navigation Equipment

a. The medical company, along with other CS, CSS, and combat units has been allocated sufficient quantities of GPS devices commensurate with their missions. Normally, they are provided for each vehicle, particularly those deployed in the forward areas.

b. This is a handheld (may be vehicular mounted), battery-powered position and navigation set that receives its signal from GPS satellites, performs calculations, and displays position, velocity, time, and navigational data. These devices provide a very accurate position location capability for determining and/or reporting self-location; however, it is not a communications device.

c. The company/troop ambulance teams, treatment teams, and wrecker operators will employ the GPS device.

Section II. COMBAT NET RADIOS

I-7. Combat Net Radio Systems

The SINCGARS radio, the IHFR, the Harris Corporation radios, and the PSC-5 SCTACSAT radios comprise the CNR in the AMEDD inventory. These systems serve as the primary means for voice transmission of C2 information and as a secondary means to MSE for data transmission.

a. The AM (high frequency) radios provide mid- to far-range communications capabilities. They interface with other AM high-frequency radios that provide secure voice and data capability, and have push-button frequency selection. The AN/GRC-246 digital high-frequency radio system from the Harris Corporation provides reliable tactical communications through enhanced digital voice, data performance, and networking protocol capabilities. This radio is user friendly, menu-driven, owner-operated, and with a computer interface that makes operation relatively easy. It uses new technology features unavailable in previous high- frequency radio equipment. The digital radio has automatic link establishment and a serial tone modem that employs data transport protocols with error detection and correction. The radio uses micro-processor technology features to overcome nearly all of the limitations (propagation and frequency management) commonly associated with high frequency beyond line of sight communications. It replaces the need for the operator to search for the best operating frequency, attempt to establish or maintain communications, and overcome the problems caused by ever-changing propagation conditions and noise interference.

NOTE

While the radio is easier to use than previous systems, the operator must still acquire USEABLE frequencies from a frequency management office. Not all frequencies between 1.5 and 30 MHz will work depending on the location of the sender and the receiver, time of day, and time of year. Commercial software programs are available to check the propagation of high-frequency radios and are a wise investment for units planning to use such radios. If high-frequency radios are critical to your mission, it is recommended the unit acquiring as many frequencies as possible (10 should be enough) and confirming the propagation characteristics of each prior to deployment. Frequency management offices have been known to provide high-frequency radios that will not propagate for the specific mission requested.

b. The SINCGARS has a 16-element keypad for push-button tuning for simple and quick operation. The system is capable of short-range operation for voice or digital data communications. It is also capable of interfacing with the AN/VRC-12 series or other FM radios. The SINCGARS radios can operate in a jam-resistant, frequency-hopping mode that can be changed as needed. (Refer to FMs 11-1, 11-32, and 11-50 for communications operations in the corps, division, and below.). The SINCGARS can monitor or scan up to five frequencies simultaneously and transmit on the one selected.

c. The SCTACSAT provides a strategic reach-back and range extension capability. It is primarily used to transmit voice, but has a limited data capability (limited due to narrow bandwidth). The "reach-back" capability is critical for deployed forces prior to the ACUS network becoming operational. However, due to satellite availability, the network is often oversubscribed and presented on a priority basis. The "range extension" technique provides a retransmission capability for FM radios greatly extending broadcast ranges.

I-8. Radio and Wire Nets

The medical company/troop establishes radio nets to maintain an information link for command and technical control of its elements. It is also essential that this Echelon II unit establishes radio communication links with supporting corps medical elements and supported medical platoons to ensure that timely CHS is provided throughout its support area. The medical company/troop, under its parent support battalion/ squadron, employs its SINCGARS radios in three separate FM nets: command net, treatment platoon medical operations net, and an ambulance platoon medical evacuation net. It also employs an AM (high frequency) net.

a. *Command Frequency-Modulated Net*. For C2, the commander establishes a command net (Figure I-1). The NCS, operated by the unit CP, is normally comprised of the commander's station, treatment platoon leader's station, ambulance platoon leader's station, MH station, PVNTMED station, and a wrecker operator/maintenance station. The commander's station is also deployed in the battalion/squadron command net. The CP/NCS may be employed in the brigade or regimental administrative/logistics net. The CP is authorized the NCD KYX-15/TSEC for its NCS operation. The treatment platoon's NCS may also serve as the alternate NCS for the command net.

b. *High-Frequency Radio Net (Amplitude Modulated)*. If the unit is a divisional medical company, it is required to net with the DMOC medical operations net to ensure the external flow of CHL and air/ ground evacuation support. If the unit belongs to a nondivisional brigade or regiment, it will have access to the supporting medical group medical operations net. Nondivisional medical companies/troops may also access high-frequency nets of the MEDLOG and medical evacuation battalions. The signal officer of the parent support battalion/squadron assists the medical company/troop in obtaining adequate SOI to allow it to access these dedicated medical networks. The unit's CP operates its high-frequency station (Figure I-2).

c. *Treatment Platoon Medical Operations Frequency Modulated Net*. For OPCON of its treatment elements, the treatment platoon establishes a medical operation net (Figure I-3). The platoon headquarters operates the NCS. The platoon headquarters may also serve as an alternate NCS for the command net, and the clearing station may serve as the alternate NCS for the treatment platoon. Approaching air ambulances

for patient pickup also use this net. When treatment squads/teams of the medical company/troop are deployed in DS, or are attached to supported maneuver battalions/squadrons, they will normally operate in the medical operations net of the supported BAS/SAS. They must be provided appropriate SOI for support operations.

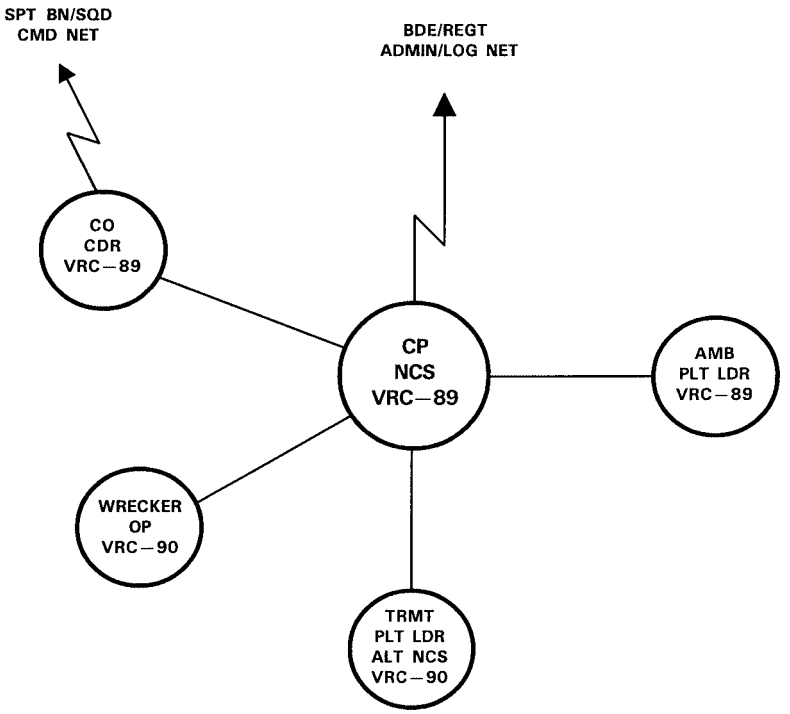

Figure I-1. Medical company/troop command frequency-modulated net.

d. Ambulance Platoon (Dedicated) Medical Evacuation Frequency-Modulated Net. The ambulance platoon, under the control of its parent unit, establishes an FM net (Figure I-4) primarily dedicated to air and ground medical evacuation radio traffic for the supported area. This net, operated by the platoon headquarters, provides for the control of organic ambulances and for coordination of air and ground patient evacuation in the supported area. The supported BAS/SAS and supporting corps air and ground ambulances all operate on this net for the evacuation of patients out of the supported area. Supported aid stations also use this net for the coordination of CHL support.

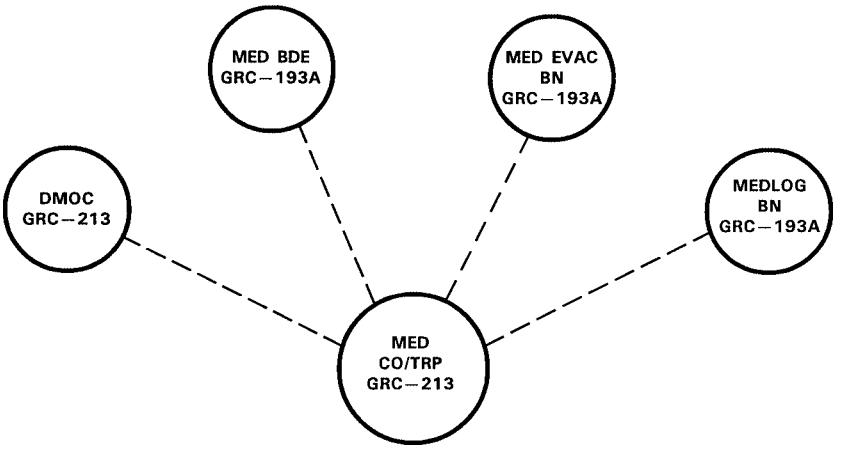

Figure I-2. Medical company/troop medical operations high-frequency net access.

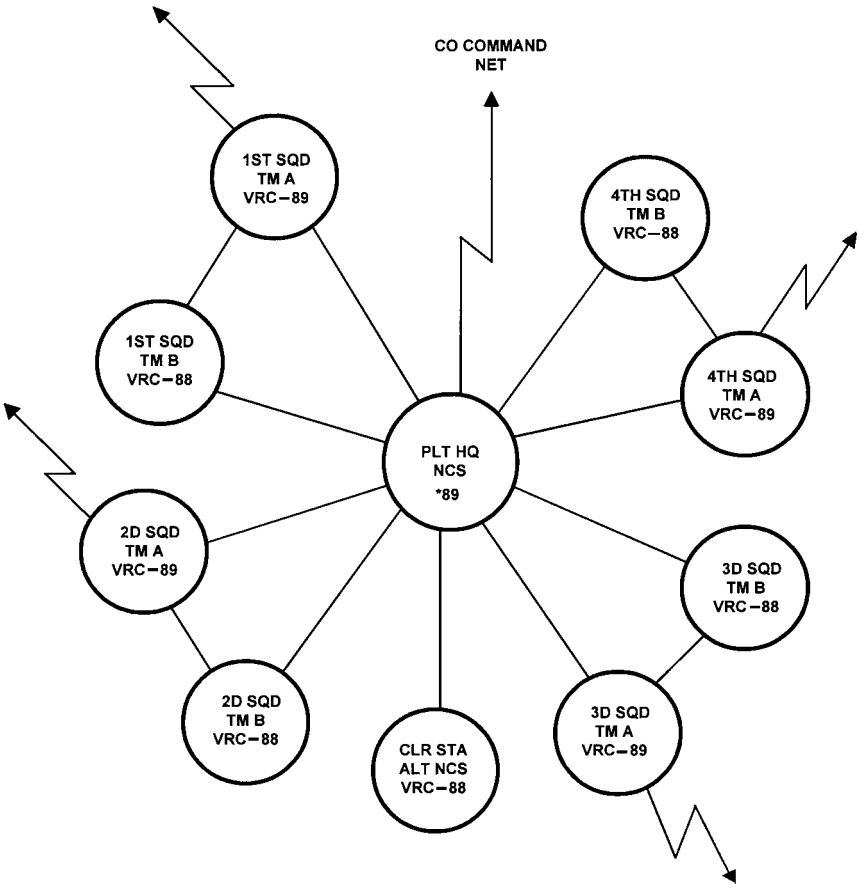

Figure I-3. Treatment platoon medical operations frequency-modulated net.

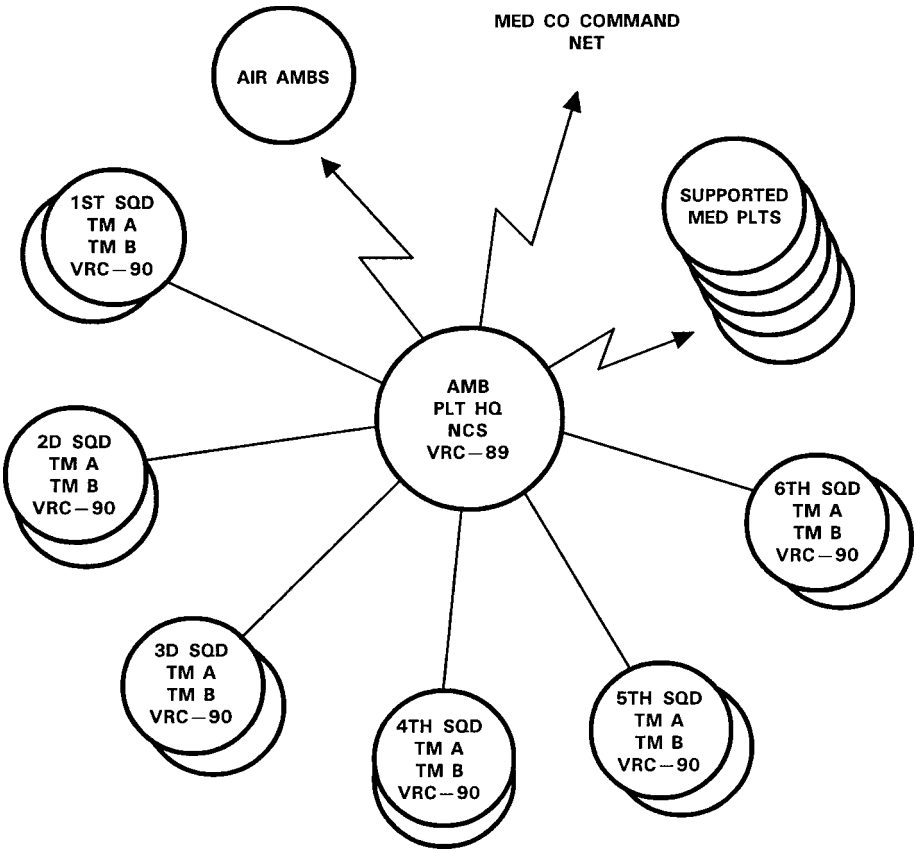

Figure I-4. Dedicated medical evacuation frequency-modulated net.

e. Supported Medical Platoon. This supported Echelon I element employs a medical operations net (Figure I-5) under the headquarters and headquarters company/troop of the parent maneuver battalion/ squadron. The platoon headquarters serves as the NCS. Its station is also deployed in the administrative/ logistics net. Other stations of this medical operation net include Treatment Team A (battalion/squadron surgeon's station), Treatment Team B (PA station), ambulance team stations, and the attached treatment squad/team from the supporting medical company/troop. The medical platoon is provided appropriate SOI sufficient to net with both supported and supporting units.

NOTE

Each ambulance team is a separate station and will require separate call signs.

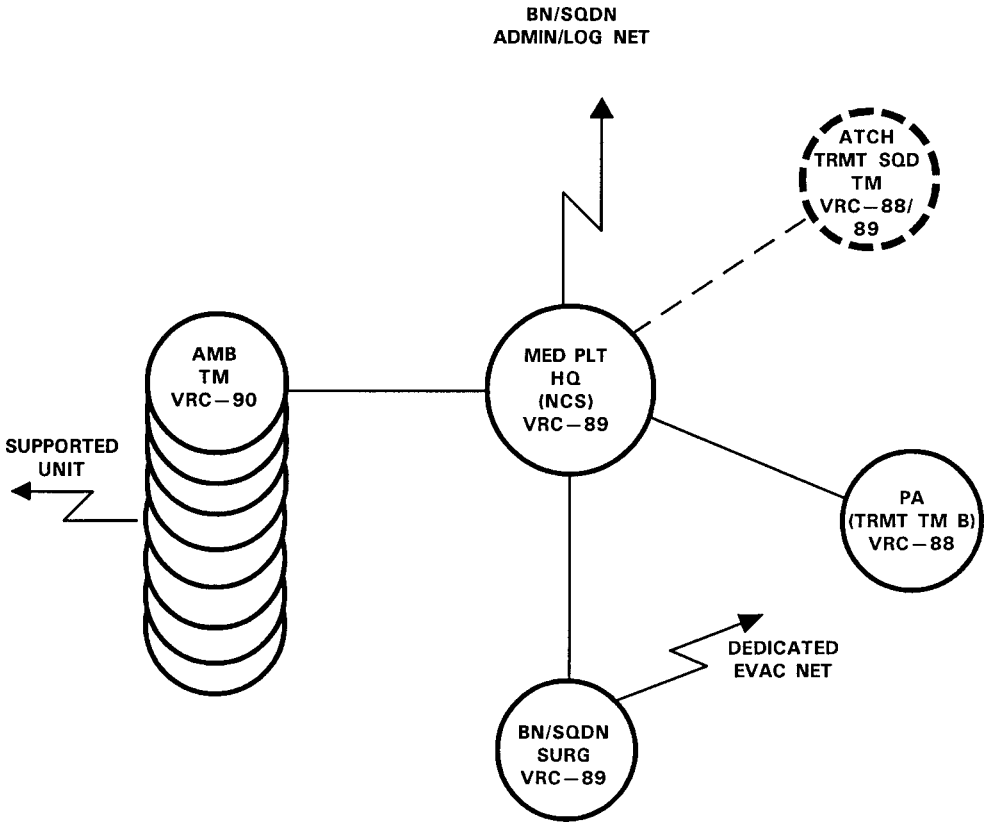

Figure I-5. Sample battalion aid station/squadron aid station medical operations frequency-modulated net.

f. Internal Wire Communications Net. The medical company/troop employs DNVT MSE for internal communications. These phones will be replaced by regular garrison desk telephones when the MSE is replaced by the Warfighter Information Network (WIN) system. The small extension node (SEN) assigned to the unit will not change much in appearance, but the communications capability upgrade will be substantial. Figure I-6 depicts a typical wire net for an MSMC and a medical company of a heavy separate brigade.

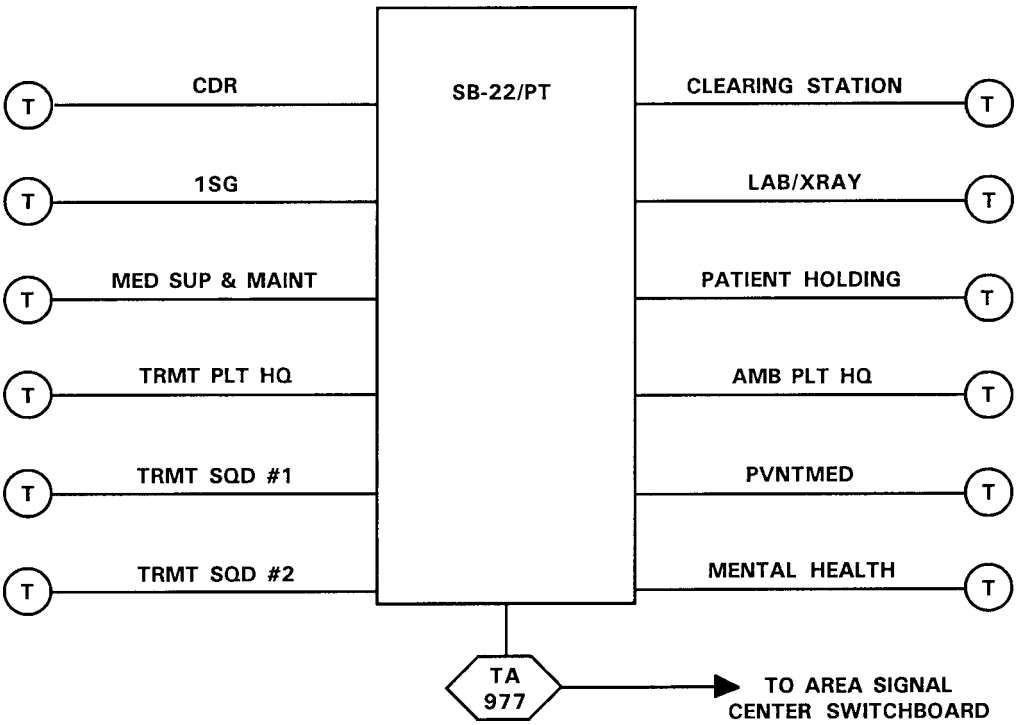

Figure I-6. Sample medical company/troop internal wire net.

Section III. AUTOMATION AND DIGITIZATION

I-9. Warfighter Information Network

a. The WIN is Force XXI's communications network that will replace tri-service tactical communications and MSE (from theater to battalion CP/TOC) and provide a C2 on-the-move capability to the warfighter. The system uses commercial products and technology; provides wired and wireless communications to support voice, data, and video information exchange requirements; provides seamless connectivity among Army Battle Command Systems (ABCS) and weapons platforms within the battle space; supports multiple security levels (unclassified, secret, and top secret/sensitive compartmented information); and integrates terrestrial, airborne, and satellite-based transport systems.

b. The WIN is the designated ACUS to replace the MSE system. The terminal equipment will include COTS desk telephones, COTS FAXs, secure terminal equipment telephones, networked automation devices and video teleconferencing equipment. The secure terminal equipment telephones are compatible with secure telephone unit-III telephones in garrison.

I-10. Tactical High-Speed Data Networks

The tactical high-speed data network is an MSE upgrade providing increased bandwidth to support the video and high-speed data requirements as an interim step towards the WIN. Components include a high-speed multiplexer II, an enhanced-trunk group modem order-wire, Cisco routers, forward error correction, network management, and security to support the data network. The link from a SEN to a node center will increase in capacity from 16 kilobits per second (kbps) to 512 kbps. An internodal link will increase from 64 kbps to 3,000 kbps.

I-11. Medical Company Automation/Digitization Enablers

The automation and digitization enablers to be made available for the medical company consists of the MC4; the FBCB2; the GCSS-A; the TC-AIMS), the MTS, and various COTS office computers purchased by individual units.

a. Medical Communications for Combat Casualty Care. The best way to visualize the MC4 system capability is as a piece of the Army digital computer network where all 10 CHS functional areas have been digitized and this CHS information is freely shared with everyone on the Army network with a need to know. The MC4 system will be a theater-automated CHS system that links commanders, health care providers, and medical support providers, at all echelons, with integrated medical information. Two of the most significant capabilities that the MC4 system will bring the warfighter are enhanced ability to clear the battlefield and in-transit visibility of soldiers.

b. Force XII Battle Command Brigade and Below System. The FBCB2 system is a digitized BCIS that provides on-the-move, real-time and near-real-time battle command information to tactical combat, CS, and CSS leaders and soldiers. The FBCB2 system, as a key component of the ABCS, seamlessly integrates with the other components of ABCS at the brigade and battalion level. FBCB2 supports situational understanding down to the soldier/platform level across all battlefield functional areas and echelons. The FBCB2 system also provides the means for brigade- and battalion-level commanders to command when away from their TOCs, interoperating with subordinate commanders and leaders also equipped with FBCB2.

c. Global Combat Support System-Army. This system ties in all CSS data to C2 and provide CSS situational understanding. This is the Army's new automated system that will, over time, replace or interface with all of the existing CSS automated systems. The title specifies CSS rather than logistics system, because the new system will encompass personnel, financial, medical, and other nonlogistics CSS functions. The GCCS-A will be made up of a series of functional modules such as supply, property, maintenance, and management. Each module will run at any level or organization where the Army performs that function.

d. Transportation Coordinators'-Automated Information Management System. The TC-AIMS is a system that provides an integrated information transportation system capability for routine deployment, sustainment, and redeployment/retrograde operations.

e. Movement Tracking System. The MTS is a satellite-based tracking/communications computer found on ambulances and in the company CP. The system's primary purpose is to maintain visibility of

vehicles, like ambulances, that move individually and continuously across the battlefield. The system has the ability to send and receive free text messages for coordination and C2.

NOTE

Army of Excellence division ambulances have the MTS. Force XXI division ambulances will have FBCB2.

f. Commercial-Off-the-Shelf Office Automation. The computer devices present in tactical units essentially mirror the office place automation. Full-sized COTS personal computers and laptops, all with bubble jet or laser printers, are standard operating equipment. The systems host contemporary office software with PowerPoint, Word and Excel, to name a few.

Section IV. MEDICAL COMMUNICATIONS FOR COMBAT CASUALTY CARE SYSTEM CONCEPT

I-12. General

a. The digitized medical companies of the Force XXI division will employ the MC4 system, once the system becomes operational. They will operate under the CSS Standard Army Management Information System. The MC4 system is a theater, automated CHS system, which links commanders, health care providers, and medical support providers, at all echelons, with integrated medical information. The system provides digital enablers to connect both vertically and horizontally, all 10 CHS functional areas.

b. The MC4 system receives, stores, processes, transmits, and reports medical C2, medical surveillance, casualty movement/tracking, medical treatment, medical situational understanding, and MEDLOG data across all echelons of care. This is achieved through the integration of a suite of medical information systems linked through the Army data telecommunications architecture.

c. The MC4 system begins with the individual soldier and continues throughout the health care continuum. The best way to visualize the MC4 system capability is as a piece of the Army digital computer network where all ten CHS functional areas have been digitized and this CHS information is freely shared with everyone in the Army with a need to know. Not only will the MC4 system provide Army commanders with CHS information, but it will also provide them with a seamless transition to the joint CHS environment. The MC4 system will consist of three basic components: software, hardware, and telecommunications systems.

(1) *Software*. The joint TMIP will provide government off-the-shelf (GOTS)/COTS software and interoperability standards to support joint theater operations. The software provides an integrated medical information capability that will support all echelons of care in a TO with links to the sustaining base.

Medical capabilities provided by the software to support commanders in the theater will address medical C2 (including medical capability assessment, sustainability analysis, and medical intelligence); MEDLOG (including blood product management and medical maintenance management); casualty evacuation; and health care delivery. The MC4 system supports Army-unique requirements and any software needed to interface with Army information systems such as CSSCS, GCSS-A, FBCB2, warrior programs, and the MTS.

(2) *Hardware systems*. The hardware will consist of COTS automation equipment supporting the above software capabilities. Examples include, but are not limited to, computers, printers, networking devices, and the EIC.

(3) *Telecommunications systems*. The MC4 system will rely on current and proposed Army solutions for tactical, operational, and strategic telecommunications systems to transmit and receive digitized medical information throughout the theater and back to the sustaining base. There will be no separate AMEDD communications system. Telecommunications at brigade and below will be accomplished through the tactical Internet; above brigade level, telecommunications will be accomplished through the WIN architecture. The MC4 system includes hardware or software required to interface with current and emerging technologies, supporting manual, wired, and wireless data transmission. At end-state, the MC4 system users will exchange data electronically via the WIN architecture. In the interim, commercial satellites will be fielded to selected medical units (for example, MDT) receiving the MC4 system to support high bandwidth requirements until the WIN architecture is fully fielded. Personnel operating satellite assets are resourced in the MDT TOE and will be located with the MDT. The MC4 system employs a three-block incremental development approach that incorporates the spiral systems engineering life-cycle methodology designed to reduce development risk, improve manageability, increase maintainability, and accelerate benefits to the warfighter. The MC4 system will be the Army's medical information system to modernize, digitize, and integrate medical information and make it available for the warfighting commander's use.

1-13. Medical Digitization of the Combat Brigades

All soldiers have long required the ability to carry medical information with them for purposes of individual readiness, continuity of care, medical surveillance, and post-deployment health care follow-up.

a. Under the MC4 system, medical information about every IBCT soldier will be entered into a local database and maintained at the supporting BAS or troop medical clinic. This information will include the soldier's immunization status, medical deployability status, and dental deployability status. A commander faced with a deployment will be able to simply query the database to gain the deployability status of the entire command.

b. Commanders will have, for the first time, readiness tracking and reporting during all phases of deployment. The DOD standard automated systems will enhance commanders' ability to track/report qualification for worldwide deployment by tracking such items as blood type, dental readiness, immunizations, allergies, flight status, physical profile, eyeglass prescriptions, current medical condition and medications, thereby ensuring that the commander deploys a fit and healthy force. These digital tools significantly enhance theater clearance and manifesting which ultimately streamlines the soldier readiness process.

c. Fielding of modular/tailorable CHS units, combined with the digital enablers, allows optimization of the CHS footprint within a TO minimizing strategic lift and ensuring early deployment of critical CHS assets. Digital enablers and reach capabilities will also optimize theater assets. Teleconsultation provides specialty medical information to maximize the effectiveness of deployed personnel.

I-14. The Application of Medical Communications for Combat Casualty Care in Combat Health Support Echelons of Care

The following paragraphs discuss how MC4 applies at each echelon of CHS in an operation involving the combat brigade.

a. Echelon I.

(1) The 91W/trauma specialist (combat medic) will be the first point where a casualty interfaces with MC4. Each 91W/trauma specialist will be equipped (when made available) with an MC4 Type I handheld Personal Digital Assistant (PDA) computing device capable of reading from and writing to the casualty's EIC. Medical care provided to the casualty by the 91W/trauma specialist will be recorded on the EIC. Where communication assets allow, this information will also be transmitted to the supporting BAS.

(2) If a casualty's injuries or illness require treatment beyond the 91W/trauma specialist's abilities, the 91W/trauma specialist (combat medic) will notify the platoon sergeant who will relay a request for support/evacuation using the FBCB2 system to the company's 1SG. The 1SG, who normally has control over the ambulances operating in DS support of the maneuver company, will dispatch an ambulance to the location. The casualty will then be evacuated to a higher level of medical care, most likely the BAS. During this evacuation, an on-board 91W/health care specialist will use digital equipment to monitor the patient and provide en route care as required. Under MC4, each ambulance will be equipped with an on-board MC4 computing device, which will interface with the casualty's EIC. En route care provided by the 91W/trauma specialist will be recorded on the patient's EIC and will also be transmitted to the destination medical treatment facility. Digital linkages to medical C2 units/medical regulators allow for redirecting the casualty en route should the need arise. The request for evacuation from the 91W/trauma specialist's site may also be made over FBCB2 system, utilizing a built-in MEDEVAC request.

(3) At the BAS, the medical staff will use MC4 Type II computing devices to read from the patient's EIC, ascertaining information on the care that the patient has received demographic information, and any relevant medical history. Using the MC4 computing device, the BAS medical personnel will record care provided onto the patient's EIC. This information, along with any information generated by the treatment that the casualty receives at the BAS will be recorded onto the local database. The information will also be transmitted to the next higher level of medical care (medical company) and ultimately to the interim theater database.

(4) The present MEDLOG system at Echelon I is a totally manual system. Under MC4 the 91W/trauma specialist will utilize FBCB2 to request medical supplies from the BAS. This request will be a built-in report in FBCB2. At the BAS, requests for Class VIII resupply will be made utilizing the MC4 system.

b. *Echelon II*.

(1) At the Echelon II MTFs (for example, the medical company/FST), MC4 will provide the same augmentations to treatment documentation, evacuation, and MEDLOG that will be seen at Echelon I. Through the use of the MDT, the medical company will have the ability to digitize medical data (x-rays, pictures, etc.) and transmit it to medical experts at EAB/EAD. This teleconsultation ability will result in some casualties being treated farther forward in the theater and will increase the RTD rate and reduce overevacuation.

(2) The MC4 system will automate linkage of Class VIII to the transportation system. The management of the complex medical sets along with the quality control of Class VIII materiel is also automated improving efficiency over the current manual system.

c. *Echelon III*. The MC4 will allow reach capability to Echelon III CHS and beyond. Echelon III contains hospitals and all of the specialized medical units required to support the theater. The MC4 system will link all of these medical functions. This system will equip corps treatment and evacuation teams with personally carried and mobile computers for the collection and forwarding of medical information to the forward, division, or ASMC. Likewise, CSC teams, veterinary teams, dental teams, and PVNTMED teams operating in the brigade rear area will be equipped with personally carried or mobile computers. These MC4-provided devices will be loaded with the appropriate software functionality. Corps/theater medical regulators/medical C2 will be able to rapidly and accurately match treatment capability with the soldier's need for care. The MC4 corps medical regulating system (TRANSCOM's Regulating and Command and Control Evacuation System) provides this functionality via WIN. A seamless Class VIII (including blood) automated system links the theater to prime vendor systems in CONUS.

I-15. Medical Command and Control Application

a. Under MC4, medical information on soldiers will be stored at different levels. This will allow commanders and command surgeons at the various echelons to access medical information on their soldiers to find out specific information and to conduct analysis of disease/injury trends. These lower echelon databases also provide a means for information redundancy should destruction of an information node or communications outage occur. Each database will feed the databases above it. Personnel (medical commanders, staff surgeons) at each echelon with MC4 management functionality will be able to query the database. The CHS information required by the CSSCS will pass from the MC4 system through GCSS-A to CSSCS.

b. The brigade surgeon will maintain a database containing medical information relevant to the soldiers in the brigade. This will be the interim theater database that provides information to update sustaining base medical information systems such as the computer based patient record and health surveillance system.

c. At all echelons, MC4 will automatically provide information such as evacuation status, current fitness for combat, and hazard exposure information to the commander's situational understanding system. The MC4 system will provide the commander with the ability to track and record the date and location of

exposure to health hazards, which include environmental, occupational, industrial, and NBC hazards. This information is critical to the force health protection hazard analysis necessary to identify emerging DNBI problems and trends. Commanders will have real-time information on food sources safety/quality, operationally significant zoonotic disease, health surveillance/trends, and near-real-time health hazard assessment data for NBC/endemic disease threats and occupational or environmental health threats. This information will be provided to the commander from the MC4 functional digital systems through GCSS-A to CSSCS. Commanders, for the first time, will have a complete picture of the battle space, which will allow them to accurately influence current operations while synchronizing CHS with other activities.

d. The capabilities of the medical assets available to the combat brigade will be optimized with technological enablers for equipment and supplies, and with digital enablers to include FBCB2, CSSCS, MC4, TMIP, WIN, and the EIC. Figure I-7 provides an example of the MC4/TMIP database structure.

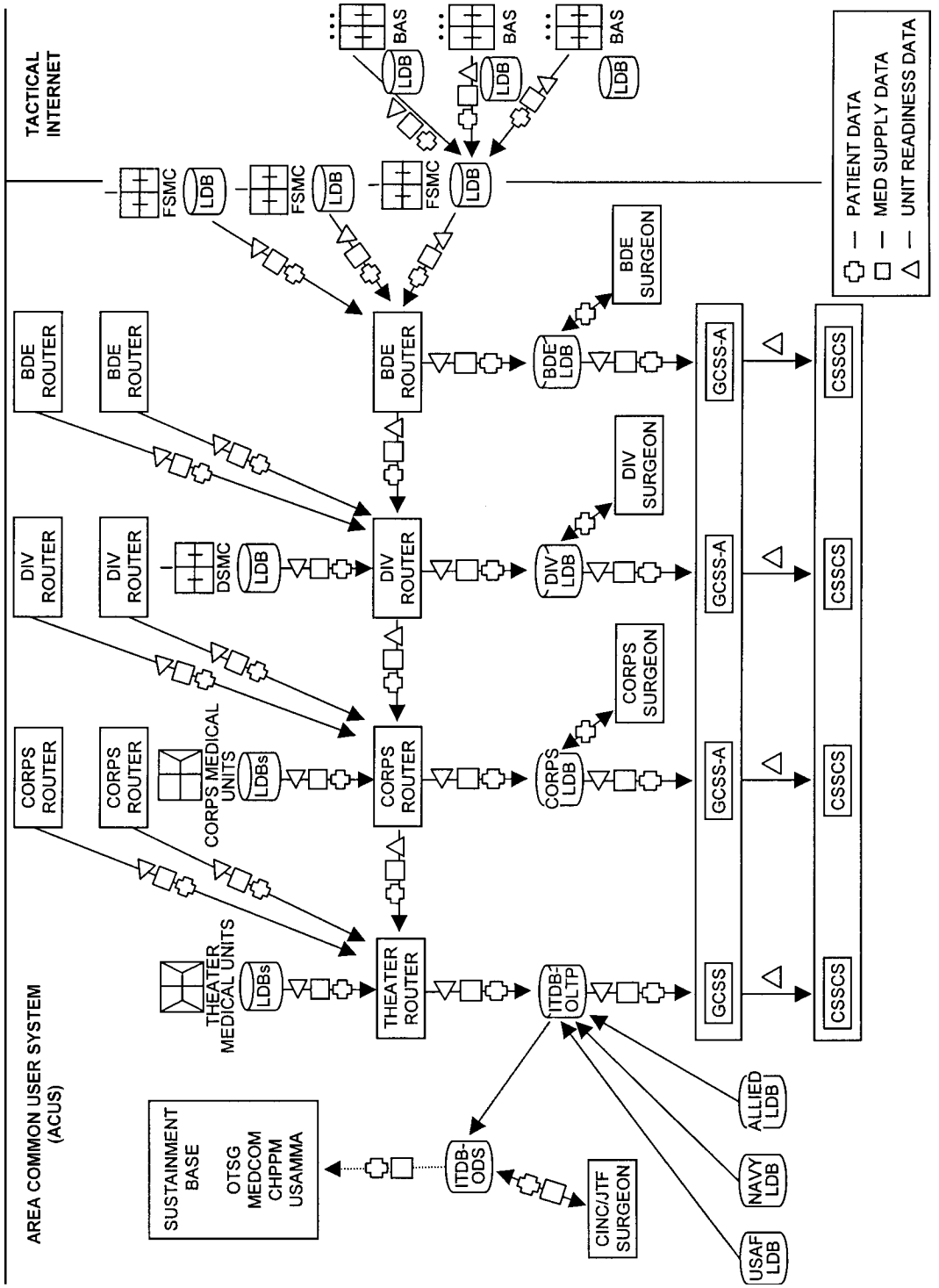

Figure I-7. Medical communications for combat casualty care/Theater Medical Information Program database structure.

APPENDIX J

CLEARING STATION OPERATIONS ON URBANIZED TERRAIN

J-1. Employment

In military operations on urbanized terrain (MOUT), the medical company's/troop's treatment units may be required to deploy forward to provide Echelon I augmentation.

J-2. Site Selection and Unit Layout

Site selection and unit layout requirements of the medical company/troop, as discussed in Chapter 3, are still valid considerations in MOUT scenarios. However, MOUT-specific issues must also be considered.

a. *Locations Within the City*. If the area selected for the medical company to occupy is within the city, it is important that the site be—

- Adequate for the number of casualties expected.
- That avenues of approach and egress are readily available.
- That there be a smooth flow of traffic within the site.
- That the location is reasonably secure easily defended and that it affords protection from observation and the direct and indirect fires that are likely to result from that observation.

b. *Existing Buildings*. Combat in urban environments generally results in serious damage to existing buildings. This damage may compromise the structural integrity of these buildings and render them unsafe. If medical company operations must be established within existing battle damaged structures, they should be inspected by engineers and declared safe for occupation.

c. *Basements*. In many areas of the world, basements and subbasements are routine parts of construction. Although basements afford protection from small arms and automatic weapons fire, they also pose many potential hazards. Combat in urban areas may damage or destroy gas, water and sewer mains (distribution systems). As the leaking gas may be heavier than air, it will settle into the low lying spaces creating poisoning as well as fire and explosion hazards. Another hazard presented by establishing the MTF in a basement or series of basements is that the building may collapse due to artillery fire or aerial bombing, trapping medical personnel and patients under the rubble.

d. *Fortifying the Building*. If ground and upper level floors of a building are used, fortifications to the building can lower the threat from small arms and automatic weapons fire. This can be accomplished by barricading windows and using sandbags; observation/firing ports (holes) can be left open. By covering these observation/firing ports at night, light discipline can be maintained in the MTF operational area.

J-3. Forward Surgical Team

The forward surgical team FST will collocate with the clearing station during MOUT operations. This element provides forward surgical intervention for nontransportable trauma patients. Once stabilized by the FST these patients can be evacuated further to the rear for more definitive care.

J-4. Mass Casualty Operations

Mass casualty situations are chaotic events the throw large numbers of people together under less than ideal circumstances. When anticipated and prepared for, through detailed planning, coordination, regular rehearsals and tough realistic training the chaos associated with this type of event can be minimized. These actions require proactive command level emphasis for units to be able to effectively deal with these situations

a. *Planning*. To ensure efficient management of MASCAL situations, the CHS planner must develop an effective plan and then rehearse it on a periodic schedule.

b. *Rehearsal and Training*. The response to a MASCAL situation is determined in large part by how well the unit is prepared before the event occurs. Rehearsals are an invaluable tool for assessing the strengths, weaknesses and training required to make personnel proficient in their individual and collective tasks when responding.

c. *Additional Information*. For additional information on MASCAL operations, see Appendix C.

J-5. Forward Deployed Medical Treatment, Preventive Medicine, and Medical Evacuation Assets

a. *Medical Treatment*. The medical company will augment and/or reinforce aid stations as needed during MOUT operations. Combat health support planners should consider pushing additional Class VIII items forward to the aid stations in response to the increased number of casualties that are generally sustained during MOUT operations. During the initial fight, the focus of the aid station is to treat and stabilize severe trauma patients for evacuation. As a result, routine sick call services will usually be passed to the medical company. The medical company/troop must, therefore, provide this support.

b. *Preventive Medicine*. Throughout history, disease nonbattle injury (DNBI) resulting from medical threats (including, but not limited to, heat, cold, and disease) have accounted for more losses to fighting forces than combat-related injuries. The need for effective preventive medicine measures cannot be overemphasized, especially in MOUT operations. Combat in urbanized terrain by its nature creates some unique hazards and situations. Despite considerable advances in the technology of war, the medical threat still presents a significant danger to our forces. For detailed information concerning preventive medicine refer to FMs 8-10-7 and 21-10.

c. *Medical Evacuation*. Conducting medical evacuation operations in the MOUT environment challenges the CHS planner. He must ensure that the CHS plan includes special or unique materiel

requirements or improvised use of standard equipment. The plan must be sufficiently flexible to support unanticipated situations. For detailed information concerning patient evacuation in MOUT operations refer to FM 8-10-6, Chapters 5 through 10.

APPENDIX K

MANAGEMENT OF INDIVIDUAL HEALTH RECORDS IN THE FIELD

K-1. General

a. This appendix provides guidance on the maintenance of the soldier's individual HREC and CEMRs in the field. The governing regulation is AR 40-66.

b. Health records are maintained by the MTF that provides primary care for the soldier.

c. Unit commanders will ensure that HRECs are always available to AMEDD personnel who require such records in the performance of their duties. Unit commanders will also ensure that the information in the HRECs is kept private and confidential in accordance with law and regulations governing patient records administration.

d. Health records located at an Echelon I MTFs are maintained by unit medical personnel. The AMEDD officer-in-charge serves as the custodian of the HRECs and CEMRs. Army Medical Department officers are in charge of the HRECs and CEMRs for the members of the units and civilian employees for whom they supply primary medical care. They are also in charge of the HRECs, CEMRs, and the records of other individuals that are receiving treatment from the MTF. Health records are important for the conservation and improvement of the patient's health. Therefore, AMEDD officers will ensure that all pertinent information is promptly entered in the HRECs/CEMRs in their custody. If any such pertinent information has been omitted, the AMEDD officer will take immediate action to obtain such information from the proper authority and include it in the HREC/CEMR.

K-2. Health Records of Deployed Soldiers

a. *Health Records*. The HRECs (DA Form 3444 or DA Form 8005 Series [Medical and Dental Treatment Records]) of deployed soldiers and the CEMR of deployed civilians will not accompany them to the combat area.

(1) The supporting MTF will initiate a DD Form 2766 (Adult Preventive and Chronic Care Flowsheet), DD Form 2766C (Adult Prevention and Chronic Care Flowsheet Continuation), DD Form 2795 (Pre-Deployment Health Assessment Questionnaire), and DD Form 2796 (Post-Deployment Health Assessment Questionnaire). If an individual deploys, the DD Form 2766 and DD Form 2766C will be photocopied prior to deployment and the copy will be kept in the medical record. The original DD Form 2766 and any DD Forms 2766C will accompany the individual to the field. The DD Form 2766 serves as the treatment folder for the individual that is deployed; other forms, such as DD Form 2766C, DD Form 2795, DD Form 2796, and SF 600 (Health Record–Chronological Record of Medical Care) will be filed on the fastener inside DD Form 2766. The photocopies of the DD Form 2766 and DD Form 2766C will be removed and shredded when the originals are placed back into the HREC or CEMR. Forms that had been filed inside the DD Form 2766 folder will be removed and place in the HREC or CEMR (in the regular treatment folder).

(2) When processing individuals for deployment, the MTF and dental treatment facility (DTF) will audit each individual's HREC or CEMR and record essential health and dental care information on DD Form 2766. If a HREC or CEMR is not available, DD Form 2766 will be completed based on individual interviews and any other locally available data. A HREC may not be available for most Individual Ready Reserve, Individual Mobilization Augmentees, and retired personnel because these HRECs may remain on file at the Army Reserve Personnel Command (ARPERSCOM) or the VA.

(3) Upon notification of deployment, all military personnel will complete DD Form 2795.

(*a*) The individual being screened will fill out the section entitled *Demographics* on page 1, and the section entitled *Health Assessment* on page 2. These sections are self-explanatory.

(*b*) The health assessment administrator will fill out the boxed area on page 1 entitled *Administrator Use Only*, and will answer the user's questions on filling out the form. The administrator will document the deployment location as well as the completion date of the pre-deployment evaluation on DD Form 2766, Block 11, *Pre-/Post-Deployment History*. This does not apply to classified operations.

(*c*) The health care provider will fill out the section entitled *Pre-Deployment Health Provider Review* on page 2.

(*d*) A copy of the form will be filed on the fastener inside the DD Form 2766 folder; one copy will remain in the HREC, and the original form will be sent to the Army Medical Surveillance Activity, ATTN: MCHB-TS-EDM/Deployment Surveillance, Building. T-20, Room 213, 6825 16th Street NW, Washington, DC 20307-5000.

(4) Department of Defense Directive 6490.2 and Department of Defense Instruction (DODI) 6490.3 state that to the extent applicable, medical surveillance activities will include essential DOD civilian and contractor personnel directly supporting deployed forces, consistent with plans established under DODIs 1400.32 and 3020.37. If DD Form 2795 is used for civilians, a copy of the form will be filed on the fastener inside the DD Form 2766 folder; one copy will remain in the CEMR, and the original form will be sent to the Army Medical Surveillance Activity.

(5) If the deployed individual is taking part in a classified operation, the pre-deployment evaluation (DD Form 2795) is still required, but the form will be maintained only in the personnel folder.

(6) The completed DD Form 2766 and a copy of any printout from an automated immunization tracking system will be provided to the individual's command, or to the individual if he or she is an individual replacement, and then handed off to the MTF in the AO responsible for providing primary medical care to that individual. That MTF will maintain the DD Form 2766 as an outpatient field file for reference as needed. The MTF will ensure that the ABO/Rh blood type from a verified blood bank typing is recorded in Block 10. The field file will consist of, in part, DD Form 2766, DD Form 2795, and possibly DD Form 2766C, DD Form 2796, SF 600, SF 558 (Medical Record–Emergency Care and Treatment), SF 603 (Health Record–Dental), or DD Form 1380. These forms will be filed on the fastener inside the DD Form 2766. For detailed information on how to complete the DD Form 1380, see Appendix C, FM 8-10-6.

(7) If DD Form 2766 is not available, the individual's field file may be managed as a "drop" file (forms not attached) and integrated into the DD Form 2766 when it is available.

b. *Forwarded Deployed Force*. If time permits, follow guidance in *a*(1), (2), and (3) above. If not, consolidate HREC in-country and process when time permits.

c. *Limited Contingency Operations*. Retain the HREC at the MTF and DTF providing primary care. If the servicing primary care facility closes, forward the HREC to the MTF or DTF indicated by the servicing MEDDAC and dental activity. If full mobilization occurs, follow guidance in *a*(1), (2), and (3) above.

d. *Units That Do Not Process Through a Mobilization Station*. Units that do not process through a mobilization station before deployment or otherwise do not have access to an MTF or DTF will follow the procedures in *b* above.

K-3. Use of Field Files/DD Form 2766

a. If a member's primary MTF changes, the field file/DD Form 2766 should be moved to the gaining MTF.

b. If a member requires admission to the hospital, every attempt will be made to forward the field file/DD Form 2766. The file will be returned to the member's primary MTF if disposition is RTD.

K-4. Storage of Health Records and Civilian Employee Medical Records

Forward deployed (Echelon I and Echelon II) MTFs will secure field chest or field file containers in quantities sufficient for the troop and civilian employee population supported. They will maintain the DD Form 2766 for each individual receiving primary medical care from their MTF.

K-5. Establishment and Management of the Field File in the Operational Area

a. A DD Form 2766 and the medical records identified above will be maintained by medical companies operating an Echelon II MTF or the medical platoon/section that operates an Echelon I MTF, or will be handed off to the MTF providing their primary care.

b. Supported units will be required to provide the primary care MTF a battle roster of personnel assigned. This roster should be provided when personnel assignment changes are made or upon request.

c. The MTF, when possible, will attempt to ensure that the HREC or CEMR accompanies the medically evacuated individual.

d. If an individual's primary MTF changes, the HREC or CEMR will be transferred to the gaining MTF.

e. If an individual requires hospital admission, every attempt will be made to forward the HREC or CEMR to the admitting hospital.

f. When the MTF determines that an individual was evacuated without the DD Form 2766 and other medical records in the file, then the individual's DD Form 2766 and other medical records are forwarded to the medical C2 headquarters responsible for regulating patients out of the AO. The medical C2 headquarters forwards the outpatient field file to the hospital where the patient was evacuated. The hospital patient administration section will attach the file to the inpatient chart and the file is evacuated with the patient out of the AO or theater.

K-6. Health Assessments after Deployment

a. All military personnel will complete DD Form 2796 prior to leaving the AO.

(1) The individual being screened will fill out the section entitled *Demographics* on page 1 and the section entitled *Health Assessment* on page 2. These sections are self-explanatory.

(2) The health assessment administrator will fill out the boxed area on page 1 entitled *Administrator Use Only* and will answer the user's questions on filling out the form. The administrator will document the deployment location (if this information is missing) and the completion date of the post-deployment evaluation on DD Form 2766, Block 11, *Pre-/Post-Deployment History*. This does not apply to classified operations.

(3) The health care provider will fill out the section entitled *Post-Deployment Health Provider Review* on page 2.

b. If a situation does not allow this health screening prior to departure, the individual's commander will ensure that the health assessment is completed and submitted to the local MTF commander within 30 days of the individual's return. The local MTF commander will ensure that a procedure is in place for submitting the original DD Form 2796 to the Army Medical Surveillance Activity and for filing a copy in the HREC.

c. If the DD Form 2796 is completed prior to leaving the AO, a copy of the form will be filed in the DD Form 2766 folder until it can be integrated into the HREC. The original DD Form 2796 will be submitted to the Army Medical Surveillance Activity, ATTN: MCHB-TS-EDM/Deployment Surveillance, Building. T-20, Room 213, 6825 16th Street NW, Washington, DC 20307-5000.

d. The post-deployment assessment of Reserve Component personnel must be completed prior to release from active duty if not completed before redeployment. Reserve Component personnel who have been deployed will also complete DD Form 2697 (Report of Medical Assessment) according to AR 40-501. Reserve Component personnel who are called to active duty but never actually deployed will only complete DD Form 2697.

e. If DD Form 2796 is used for civilians, the form will be completed prior to leaving the AO. If a situation does not allow this health screening prior to departure, the individual's commander will ensure

that the health assessment is completed within 30 days of the individual's return. If the DD Form 2796 is completed prior to leaving the AO, a copy of the form will be filed in the DD Form 2766 folder until it can be integrated into the CEMR. The local commander will ensure that a procedure is in place for submitting the original DD Form 2796 to the Army Medical Surveillance Activity and for filing the copy in the CEMR.

f. If the deployed individual is taking part in a classified operation, the post-deployment evaluation (DD Form 2796) is still required, but the form will be maintained only in the personnel folder.

K-7. Field Record Administration after Hostilities Cease

a. Field files/DD Form 2766 will be integrated with the HREC or CEMR after demobilization at the home station or at mobilization stations.

(1) On return to the MTF (post-deployment), forms, such as SF 600, will be removed from the DD Form 2766 folder and placed with the other SF 600 in the medical record.

(2) DD Form 2795 and DD Form 2796 will be removed from the DD Form 2766 folder and placed as shown in Figures 5-1, 5-2, or 7-1 of AR 40-66. If a previously photocopied DD Form 2795 is contained in the record, only one of the DD Forms 2795 will be kept; the other will be removed and shredded.

(3) The photocopies of the DD Form 2766 and DD Form 2766C will also be removed and shredded when the originals are placed back into the record. Field files/DD Form 2766 will be forwarded to ARPERSCOM for those members who's HREC is maintained at ARPERSCOM.

b. Each CONUS MTF must request records from ARPERSCOM for those members who remain on active duty and are assigned for support upon demobilization.

c. Field files will be integrated with the HREC maintained at home station or mobilization station. Field files will be forwarded to Army Reserve Personnel Center (ARPERCEN) for members who's HREC is maintained at ARPERCEN.

d. Each CONUS MTF must request records from ARPERCEN for those soldiers who remain on active duty and are assigned for support upon demobilization.

APPENDIX L

CLINICAL GUIDELINES FOR COMBAT CASUALTY CARE

Section I. CLINICAL GUIDELINES FOR PHYSICIAN–LEAD, PHYSICIAN ASSISTANT–LEAD, AND NURSING–LEAD TREATMENT MODULES

L-1. General

a. This appendix provides guidelines for use of personnel providing combat casualty care within the medical company. It focuses on the clinical aspects of the unit's operations.

b. The phased concept of combat casualty care, unique to war, permits the medical company, an Echelon II MTF, to do what must be done to render casualties transportable to an Echelon III MTF for continued treatment, or to treat and care for them for a limited period of time until they are able to RTD.

L-2. Field Surgeon (62B00 MC)

The credentialed physician (field surgeon) commanding trauma treatment elements examines, diagnoses, and treats or prescribes course of treatment for the initial phase of battlefield disease and injury. He provides resuscitative and definitive care for injured and wounded soldiers within the capability of the unit's medical element. This physician is also credentialed in Advance Trauma Life Support (ATLS®). Accordingly, he establishes and practices techniques and procedures in accordance with ATLS® protocols. The field surgeon also provides guidance to assigned clinical personnel and ensures the efficacy of their capability in handling the sick and wounded/trauma casualty. He also ensures his team readiness and continued training in tactical emergency medical care.

L-3. Physician Assistant (65D00 SP)

Physician assistants leading emergency medical treatment elements are ATM certified. The ATM is composed of ATLS® and military specific/unique ATM and resuscitative skills. They practice techniques and procedures in accordance with established ATM protocols. The PA also provides clinical guidance to assigned medical personnel and insures the efficacy of their capability in handling of the sick and wounded/ trauma casualty.

L-4. Medical-Surgical Nurse (66H00 AN)

The medical-surgical nurses leading patient holding elements provide professional nursing care and health care promotion for the assigned unit and the broader military community. Their responsibilities include ambulatory, medical-surgical, emergency, and critical care nursing. The medical-surgical nurse duties include supervision of holding squad personnel and technical training for 91W personnel of the unit. The medical-surgical nurse also provides nursing care for those patients that overflow the FST's recovery area.

L-5. Forward Surgical Team

This physician-lead 20-person Echelon II trauma treatment module employs three clinical functional areas: triage-trauma management, surgery, and recovery.

Section II. HEALTH CARE SPECIALISTS TREATMENT AND EVACUATION MODULES

L-6. The 91W Health Care Specialist

Health care specialists assigned to treatment teams, holding squad, and ambulance teams of the medical company/troop serve as integral members of the warfighting team by combining the skills of soldier and medical caregiver. The 91W performs emergency and evacuation care under the medical direction of a physician or other credentialed providers. Serves as a clinical technician in inpatient and outpatient areas of MTFs. Performs basic force health protection care for individual soldiers and small units. Is trained for combat and other operational environments. Conducts casualty triage and provides medical care for patients in all operational environments to include enroute care during ground and air ambulance evacuations. The 91W is certified to the national standards of emergency medical technician–basic (EMT–B) and augmented by the national EMT–intermediate curriculum.

L-7. Core Competencies of the 91W

The 91Ws of medical company/troop must be trained/credentialed in several areas of core competencies. These core competencies are examples of specific skills that establishes the scope and depth of clinical practice that are outlined in Tables L-1 through L-3 below.

Table L-1. Core Competency for Emergency Medical Care

CORE COMPETENCY IN EMERGENCY CARE FOR THE 91W IS INCLUSIVE OF THE FOLLOWING:

- BATTLEFIELD AND OPERATIONAL FOCUS
- FAR FORWARD PRIMARY CARE
- SKILLS TO SUPPORT UNIT READINESS AND OPERATIONAL NEEDS
- SKILLS IN CONTEXT OF TACTICAL/OPERATIONAL ENVIRONMENT

EXAMPLES:

A. ALL EMT–BASIC SKILLS
   1. ABCs (AIRWAY, BREATHING, CIRCULATION), CPR (CARDIOPULMONARY RESUSCITATION), OXYGEN THERAPY, SUCTION, AND SO FORTH.
   2. BLEEDING CONTROL, BANDAGING, SPLINTING
   3. BLS (BASIC LIFE SUPPORT) CARE FOR A BROAD ARRAY OF EMERGENCIES
   4. DOCUMENTATION OF MEDICAL CARE

Table L-1. Core Competency for Emergency Medical Care (Continued)

B. ADVANCED AIRWAY MANAGEMENT (INTUBATION, CRICOTHYROTOMY)
C. DECOMPRESSION OF TENSION PNEUMOTHORAX
D. VASCULAR ACCESS: INTRAVENOUS, INTRAOSSEOUS
E. FLUID RESUSCITATION
F. NBC MEDICAL PROCEDURES
G. LIMITED MEDICATIONS
   1. CONTROLLED MEDICATIONS (SUCH AS MORPHINE)
   2. CEPHALOSPORIN (ANTIBIOTIC)
   3. ATROPINE (NERVE AGENT ANTIDOTE)
   4. PRALIDOXIME (NERVE AGENT PROPHYLAXIS)
   5. NITRITES, SULFATES (CYANIDE ANTIDOTE)
   6. ALBUTEROL (PULMONARY AGENTS)
   7. EPINEPHRINE, BENADRYL (ANAPHYLAXIS)
   8. OTHER MEDICATIONS AT THE DISCRETION OF THE ATTENDING PHYSICIAN
H. ASSIST WITH AND MAINTAIN MEDICAL INTERVENTIONS INITIATED IN ECHELONS I, II, AND III DURING TRANSPORTATIONS. ASSIST IN THESE PROCEDURES:
   1. NASOGASTRIC INSERTION
   2. FOLEY CATHETER INSERTION AND MAINTENANCE
   3. CHEST TUBE(S) INSERTION AND MAINTENANCE
I. TRIAGE/MASCAL
J. ALL EMERGENCY CARE SKILLS ARE TRANSFERABLE TO INPATIENT/PATIENT HOLDING SETTING

Table L-2. Core Competency for Primary Medical Care

CORE COMPETENCY IN PRIMARY CARE FOR THE 91W IS INCLUSIVE OF THE FOLLOWING:

- SICK CALL NEEDS OF FAR-FORWARD UNITS
- ACUTE DENTAL, PSYCHOLOGICAL, AND OTHER PRIMARY CARE NEEDS
- PROTOCOL-DRIVEN COMMON FIELD CLINICAL PROBLEMS

EXAMPLES:
A. HEADACHE, COUGH, SORE THROAT AND OTHER MINOR COMPLAINTS
B. SPRAINED ANKLE, BRUISES, CUTS AND OTHER MINOR INJURIES
C. MINOR WOUND CARE AND CLOSURES (STAPLES/SUTURES)
D. LIMITED OVER-THE-COUNTER (OTC) MEDICATIONS
   1. ACETAMINOPHEN (HEADACHE)
   2. IBUPROFEN (ACHES AND PAINS)
   3. ANTACIDS (DYSPEPSIA)
   4. KAOPECTATE (DIARRHEA)
   5. BENADRYL (ITCH)
   6. CALAMINE LOTION (POISON IVY)
   7. OTHER AVAILABLE OTC MEDICATIONS APPROVED BY A PHYSICIAN
E. REHABILITATION OF HEAT EXHAUSTION, FATIGUE, COLD EXPOSURE, AND SO FORTH
F. ASSIST PHYSICIAN/PA IN SICK CALL PROCEDURES
G. APPROPRIATE DOCUMENTATION (PATIENT CHARTING AS APPROPRIATE)
H. CONDUCT BASIC AMBULATORY CARE—TRIAGE

Table L-3. Core Competency for Medical Evacuation

CORE COMPETENCY IN PATIENT EVACUATION AND RETRIEVAL FOR THE 91W IS INCLUSIVE OF THE FOLLOWING:

- EXTRACTION OFF THE BATTLEFIELD
- EXTRICATION FROM ALL TYPES OF COMBAT VEHICLES AND AIRCRAFT
- ONGOING EVACUATION CARE
- REQUESTING AIR/OR GROUND EVACUATION

EXAMPLES:

A. EXTRACTION OFF THE BATTLEFIELD
B. MANUAL AND LITTER CARRIES
C. EVACUATION PLATFORM LOADING/UNLOADING
D. EXTRICATION FROM VEHICLES/AIRCRAFT
E. OPERATING TACTICAL GROUND AMBULANCES (TRACKED AND WHEELED)
F. BASIC EN ROUTE MEDICAL CARE ONGOING FOR UP TO 48 HOURS
G. APPLICATION OF TACTICAL MEDICAL EVACUATION PROCEDURES AND RADIO COMMUNICATIONS

L-8. Medical Training

Tables L-4 through L-6 contains the critical tasks to be used by the commander in the development of unit medical training program for assigned or attached 91W personnel. The training will be conducted under the auspices of a licensed physician. The 91W will be certified to the national standards of EMT-B and augmented by the national EMT-intermediate curriculum. The commander (medical company/troop) will coordinate with the senior medical officer for consultation as needed, supervision of the unit's continuing education program, and to serve as the medical liaison between the unit and other services/facilities.

Table L-4. 91W10/20 Critical Task List

1. PERFORM AN INITIAL CASUALTY ASSESSMENT
TRAUMA/MEDICAL ASSESSMENTS (RESPONSIVE AND UNRESPONSIVE), BOTH ADULT AND PEDIATRIC (VS), HISTORY (HX), SUBJECTIVE OBJECTIVE PROCEDURE NOTES, AUSCULTATE BREATH/BOWEL SOUNDS, MENTAL STATUS, GLASGOW COMA SCALE, PRIORITIZE INJURIES OF INDIVIDUAL CASUALTY/PATIENT, COMPLETE SPECIFIC FORMS

2. PERFORM ONGOING CASUALTY MANAGEMENT
VS DEFICITS AND TX, ONGOING MEDICAL MANAGEMENT IN BOTH LIMITED AND UNLIMITED RESOURCE ENVIRONMENTS, PROVIDE CARE FOR COMPLICATIONS WITHIN AIR/GROUND EVACUATIONS, TRIAGE CASUALTIES

3. PERFORM A CASUALTY RESUSCITATION
UNRESPONSIVE AND RESPONSIVE CASUALTIES, CARDIOPULMONARY RESUSCITATION (CPR), AIRWAY ADJUNCTS, AIRWAY DEVICES, ADMINISTRATION OF OXYGEN (O_2), HEAD POSITIONS, COMPLETE SPECIFIC FORMS

Table L-4. 91W10/20 Critical Task List (Continued)

4. ESTABLISH AN AIRWAY
ESTABLISH AIRWAY, USING AIRWAY ADJUNCTS, CONFIRM PLACEMENT, USE AMBU BAG AND TRACHEAL SUCTION AS REQUIRED. USE MEDICATIONS FOR CONTROL OF THE INTUBATED PATIENT

5. MANAGE AN AIRWAY
FOCUSED ASSESSMENT, ADMINISTRATION OF O_2 MASKS, PULSE OXIMETER, SUCTIONING, INTUBATION

6. TREAT A CASUALTY FOR A BURN INJURY
FOCUSED ASSESSMENT (BURN SURFACE AREA/DEPTH), AIRWAY MANAGEMENT, STABILIZING TX, PAIN MANAGEMENT, WOUND CARE. (INCLUDE KNOWLEDGE ON CHEMICAL AND ELECTRICAL BURNS), PREPARE FOR EVACUATION

7. TREAT A CASUALTY FOR A MAXILLOFACIAL AND NECK INJURY
FOCUSED ASSESSMENT, AIRWAY MANAGEMENT, MANAGE AREA-SPECIFIC BLEEDING, TX TEETH INJURIES, AND PAIN MANAGEMENT, EAR INJURY

8. TREAT A CASUALTY FOR AN OCULAR INJURY
FOCUSED ASSESSMENT (HX, INCIDENT, COMPLAINTS, ACUITY, PUPIL, ORBITAL RIM, CHEMICAL), IRRIGATE EYES, SUPERFICIAL FOREIGN BODY REMOVAL, EXTRUSIONS OF THE EYE, BURNS AND CONTUSIONS, APPLICATION OF BANDAGES, PREPARE FOR EVACUATION

9. TREAT A CASUALTY FOR HEAD INJURY
FOCUSED ASSESSMENT, OPEN AND CLOSED INJURIES, TX FOR SPECIFIC INJURY, PREPARE FOR EVACUATION

10. TREAT A CASUALTY FOR A CHEST INJURY
FOCUSED ASSESSMENT, OPEN/CLOSED CHEST INJURES, NEEDLE DECOMPRESSION, FLAIL CHEST, EMPHYSEMA, TENSION PNEUMOTHORAX, ADMINISTRATION OF O_2, PAIN MANAGEMENT, PREPARE FOR EVACUATION, BLAST INJURY

11. TREAT A CASUALTY FOR AN ABDOMINAL INJURY
FOCUSED ASSESSMENT (BOWEL SOUNDS), TX OPEN AND CLOSED INJURIES (BANDAGES AND POSITION), IV FLUID MANAGEMENT, PREPARE FOR EVACUATION

12. TREAT A CASUALTY WITH A WOUND
FOCUSED ASSESSMENT (OPEN/CLOSED), TX FOR LACERATIONS AND FRACTURES (FX), APPLICATION OF DRESS-INGS/BANDAGES, SLINGS, SPLINTS, SUPERFICIAL REMOVAL OF FOREIGN BODY(IES), WOUND CARE, ESTABLISH A STERILE/CLEAN FIELD, PERFORM SIMPLE SKIN CLOSURE TECHNIQUES, PAIN MANAGEMENT, PREPARE FOR EVACUATION

13. TREAT A CASUALTY WITH AN EXTREMITY INJURY
FOCUSED ASSESSMENT (INCLUDE NERVE INJURIES AND OPEN/CLOSED INJURY), TX DISLOCATIONS AND FX, APPLICATION OF SPLINTS/SLINGS AND FX DEVICES, PAIN MANAGEMENT, PREPARE FOR EVACUATION

14. TREAT A CASUALTY WITH A MANGLED BODY PART
FOCUSED ASSESSMENT, TX CRUSHED, PARTIAL AND COMPLETE AMPUTATIONS AND AVULSIONS, IV FLUID MANAGEMENT, PAIN MANAGEMENT, USE OF TOURNIQUET, APPLY DRESSINGS, PREPARE FOR EVACUATION

15. TREAT A CASUALTY WITH AN IMPALED OBJECT
FOCUSED ASSESSMENT, TX ABDOMINAL AND EXTREMITY IMPALEMENTS, PAIN MANAGEMENT, PREPARE FOR EVACUATION

Table L-4. 91W10/20 Critical Task List (Continued)

16. CONTROL BLEEDING
FOCUSED ASSESSMENT, APPLY DIRECT PRESSURE, PRESSURE POINTS, HEMOSTATIC DRESSINGS (WHEN AVAILABLE) PRESSURE DRESSINGS, TOURNIQUET, IV THERAPY (INSERTION AND MANAGEMENT)

17. TREAT FOR SHOCK
FOCUSED ASSESSMENT (VS FOR EBL), DECISION IV FLUID MANAGEMENT/THERAPY, USE OF ALBUMIN, ASSESS URINE OUTPUT, FOLEY INSERTION

18. PROVIDE TREATMENT FOR BITES AND STINGS
FOCUSED ASSESSMENT (TYPE OF INSECT/SNAKE AND SO FORTH), TX INJURY AND COMPLICATIONS, INSTRUCT PREVENTIVE MEASURES

19. TREAT FOR ANAPHYLAXIS
FOCUSED ASSESSMENT (TYPE OF INCIDENT-FOOD, DRUGS, AND BITES/STINGS); ADMINISTER EPINEPHRINE AND OXYGEN, AIRWAY MANAGEMENT

20. PROVIDE TREATMENT FOR A TOXIC EXPOSURE
FOCUSED ASSESSMENT (INGESTED, CONTACT, INHALED) ADMINISTER IPECAC, CHARCOAL, AIRWAY MANAGEMENT (CPR), PREPARE FOR EVACUATION

21. MANAGE A SEIZING CASUALTY
FOCUSED ASSESSMENT (INCLUDE HX AND INCIDENT OF ONSET), AIRWAY MANAGEMENT, USE OF DRUGS/NARCOTICS, PREPARE FOR EVACUATION, POSITION PATIENT

22. TREAT A CASUALTY FOR A COLD INJURY
FOCUSED ASSESSMENT (MINOR TO SEVERE), PROVIDE TX FOR EACH (TEMP CONTROL, REWARMING, AND SO FORTH), INSTRUCT PREVENTIVE MEASURES, AND PREPARE FOR EVACUATION

23. TREAT A CASUALTY FOR A HEAT INJURY
FOCUSED ASSESSMENT (MINOR TO SEVERE), PROVIDE TX FOR EACH (TEMP CONTROL, COOLING, AND SO FORTH), INSTRUCT PREVENTIVE MEASURES, ORAL AND IV FLUID MANAGEMENT, PREPARE FOR EVACUATION

24. MANAGE A BEHAVIORAL CASUALTY
FOCUSED ASSESSMENT (INCLUDE DEPRESSION, SUICIDE, STRESS, AND SO FORTH), INITIATE CARE OR PREVENTIVE MEASURES, PREPARE FOR EVACUATION, STRESS MANAGEMENT PRINCIPLES

25. EXTRACT A CASUALTY
PROVIDE SUPPORT DEVICES, SPINE PRECAUTIONS/IMMOBILIZATIONS, REMOVE FROM GROUND, VEHICLE, TANK, FIXED FACILITY, AIRCRAFT, PROVIDE GROUND SURVEILLANCE FOR LAND MINES/SCENE SAFETY.

26. PERFORM CASUALTY TRIAGE
MASCAL-CORRECTLY TRIAGE CASUALTIES INTO DELAYED, IMMEDIATE, MINIMAL, OR EXPECTANT

27. EVACUATE A CASUALTY BY GROUND
ASSESS AND TRIAGE CASUALTY/IES FOR TYPE OF ROUTE APPROPRIATE FOR INJURY, LOAD AND UNLOAD A CASUALTY, LITTER CARRIES

28. EVACUATE A CASUALTY BY AIR
ASSESS AND TRIAGE CASUALTY/IES FOR TYPE OF ROUTE APPROPRIATE FOR INJURY, LOAD AND UNLOAD A CASUALTY, LITTER CARRIES

29. MANAGE MEDICAL COMMUNICATIONS
REQUEST FOR CASUALTY EVACUATION, WRITTEN FORMS OF COMMUNICATION, 9 LINE, USE OF VARIOUS EQUIPMENT, TELEMEDICINE, GUIDE COMBAT LIFE SAVERS

Table L-4. 91W10/20 Critical Task List (Continued)

30. PROVIDE POSTMORTEM CARE
PREPARE AND WRAP BODY, GRAVES REGISTRATION

31. PROVIDE TREATMENT FOR A BIOLOGICAL EXPOSED CASUALTY
FOCUSED ASSESSMENT, TRIAGE, APPROPRIATE TX PER PROTOCOL

32. PROVIDE TREATMENT FOR A NUCLEAR EXPOSED CASUALTY
FOCUSED ASSESSMENT, TRIAGE, APPROPRIATE TX PER PROTOCOL

33. PROVIDE TREATMENT FOR A CHEMICAL AGENT CASUALTY
FOCUSED ASSESSMENT, TRIAGE, APPROPRIATE TX PER PROTOCOL

34. DECONTAMINATE A CASUALTY
FOCUSED ASSESSMENT, APPROPRIATE DECONTAMINATION PROCEDURES

35. PERFORM MEDICAL SCREENING
ADMINISTER IMMUNIZATIONS, PERFORM SICK CALL PROCEDURES UTILIZING THE ALGORITHM DIRECTED TROOP MEDICAL CARE, PERFORM EMERGENCY INCIDENT REHABILITATION

36. PROVIDE BASIC CARE
BED BATH, BLOOD DRAWS (NEEDLE/VACUTAINER), MAINTAIN BLOOD/FLUID PRECAUTIONS

37. PREVENT THE SPREAD OF DISEASE
PERFORM BASIC FIELD SANITATION, INSTRUCT ON PERSONAL HYGIENE IN REMOTE ENVIRONMENTS, PREVENT NOSOCOMIAL INFECTIONS, WASH HANDS, DISPOSE OF INFECTIOUS WASTE, BODY SUBSTANCE ISOLATION

38. TREAT A CASUALTY FOR SPINE INJURY
FOCUSED ASSESSMENT, C-SPINE AND NERVE INJURIES, APPROPRIATE IMMOBILIZATION

39. TREAT CARDIOPULMONARY SYMPTOMS
FOCUSED ASSESSMENT, CHEST PAIN, HA, ABDOMINAL PAIN, SITE OF BURN; DIFFERENTIAL DIAGNOSIS OF CHEST PAIN

40. TREAT GASTROINTESTINAL SYMPTOMS
FOCUSED ASSESSMENT, ACUTE ABDOMINAL PAIN, N/V/D

41. TREAT GENITOURINARY SYMPTOMS
FOCUSED ASSESSMENT, UTIs, STDs (UNDER TREAT INFECTIOUS DISEASE), VAGINAL DELIVERY (ISOLATED ENVIRONMENT IN EMERGENCY CASES ONLY)

42. TREAT NEUROLOGICAL SYMPTOMS
FOCUSED ASSESSMENT, TX PER PROTOCOL

43. TREAT METABOLIC/ENDOCRINE SYMPTOMS
FOCUSED ASSESSMENT, ASSIST WITH TX OF HYPOGLYCEMIA PER PROTOCOL

44. TREAT INFECTIOUS DISEASE IMMUNOLOGICAL SYMPTOMS
FOCUSED ASSESSMENT, TRIAGE, APPROPRIATE TX PER PROTOCOL

45. TREAT SKIN DISORDERS
FOCUSED ASSESSMENT, TRIAGE, APPROPRIATE TX PER PROTOCOL

46. VAGINAL DELIVERY (EMERGENCY CASES ONLY)
FOCUSED ASSESSMENT, MANAGE AIRWAY, MANAGE AREA BLEEDING, PAIN MANAGEMENT, FETAL ASSESSMENT, UMBILICAL CORD MANAGEMENT

Table L-5. 91W30 Critical Task List

EVACUATE A MEDICAL CASUALTY
- THE MEDICAL EVACUATION SYSTEM INCLUDES PROPERTY EXCHANGE, MEDICAL SUPPORT OF OFFENSIVE/DEFENSIVE OPERATIONS
- ESTABLISH GROUND AND AIR AXP
- COMMUNICATE WITH FORWARD SUPPORT AIR AMBULANCE TEAM, ESTABLISH LZ
- EVACUATION OF PRISONERS OF WAR
- EVACUATION IN SPECIFIC ENVIRONMENTS INCLUDES MOUNTAIN, JUNGLE, DESERT, AND OTHER OPERATIONS
- USE OF SMOKE IN GROUND/AIR EVACUATION MISSIONS (IAW GENEVA CONVENTIONS)

PERFORM MEDICAL FORCE PROTECTION

EMPLOY PREDEPLOYMENT MEDICAL SURVEILLANCE REQUIREMENT
- CONDUCT MEDICAL SOLDIER READINESS PROCESSING
- IDENTIFY AND COORDINATE WITH PVNTMED ASSETS
- CONDUCT INSPECTIONS OF UNIT FIELD SANITATION PRACTICES
- CONDUCT INJURY PREVENTION CLASSES
- CONDUCT A MEDICAL THREAT ASSESSMENT

EMPLOY MEDICAL SURVEILLANCE REQUIREMENTS DURING DEPLOYMENT
- CONDUCT MEDICAL SURVEILLANCE DATA COLLECTION ACTIVITIES
- CONDUCT MEDICAL SURVEILLANCE DATA ANALYSIS ACTIVITIES
- REPORT MEDICAL SURVEILLANCE DATA ANALYSIS FINDINGS

EMPLOY MEDICAL SURVEILLANCE REQUIREMENTS DURING REDEPLOYMENT
- COORDINATE WITH PVNTMED FOR DEBRIEFING
- CONTINUE MONITORING POTENTIAL DISEASE SYMPTOMS FROM DEPLOYMENT

CONDUCT MEDICAL FORCE PROTECTION RISK ASSESSMENT
- IDENTIFY THE 5 STEPS OF CONTINUOUS RISK MANAGEMENT IAW FM 100-14
- UTILIZE RISK ASSESSMENT FORM FOR MEDICAL OPERATIONS
- CONFINED SPACES
- PERSONAL PROTECTIVE MEASURES

SUPERVISE A MEDICAL TREATMENT AREA
- ESTABLISH BAS, TREATMENT TEAM; MINIMAL CARE WARD, AND SO FORTH
- ESTABLISH NBC DECONTAMINATION STATION, BAS, TREATMENT TEAM/PLATOON IAW FM 8-10-7
- SUPERVISE FIELD/FIXED TREATMENT FACILITIES (WARDS, CLINICS)
- COORDINATE MEDICAL COMPETENCY BASE TRAINING.
- NATIONAL REGISTRY OF EMERGENCY MEDICAL TECHNICIAN STANDARDS
- REFRESHER COURSE
- CPR/OTHER REQUIREMENTS

APPLY MEDICAL LOGISTICS
- CLASS VIII MEDICAL RESUPPLY SYSTEM
- MEDICAL EQUIPMENT MAINTENANCE
- BLOOD STORAGE AND DISTRIBUTION
- NEW TECHNOLOGY SUCH AS O_2 GENERATION, RESUSCITATIVE FLUIDS DEVELOPMENT, BLOOD SUBSTITUTES AND FROZEN BLOOD AND HEMOSTATIC DRESSINGS

ASSIST WITH ADVANCED TRAUMA MEDICAL PROCEDURES
- CRICOTHYROTOMY
- NEEDLE CRICOTHYROTOMY/PERCUTANEOUS TRANSTRACHEAL JET VENTILATION
- CHEST TUBE INSERTION
- DIAGNOSTIC PERITONEAL LAVAGE
- CENTRAL VENOUS CANNULATION
- VENOUS CUTDOWN
- PERICARDIOCENTESIS
- RESUSCITATIVE THORACOTOMY
- ESCHAROTOMY FOR BURNS

Table L-6. 91W40 Critical Task List

ASSESS MEDICAL CAPABILITIES
- CONSIDER RECONFIGURING ASSETS (PERSONNEL, EQUIPMENT) FOR STABILITY OPERATIONS AND SUPPORT OPERATIONS
- DEVELOP VIABLE HEALTH CARE PROGRAM FOR DISASTER ASSISTANCE, COMMUNITY AND ENVIRONMENTAL ASSISTANCE, AND LAW ENFORCEMENT SUPPORT
- INDIGENOUS MEDICAL CAPABILITIES
- RESEARCH AND IDENTIFY MEDICAL INTELLIGENCE
- ECHELONS OF CARE FOR JOINT OPERATIONS

MEDICAL REGULATING
- RESPONSIBILITIES AND COORDINATION WITH OTHER SERVICES (INTRACORPS, INTRATHEATER, AND INTERTHEATER MEDICAL REGULATING).
- REGULATING WITHIN THE CZ
- ORIGINATING MEDICAL FACILITY'S RESPONSIBILITIES
- ESTIMATING MEDICALLY SIGNIFICANT CASUALTIES
- ESTIMATING ECHELON III HOSPITAL BED REQUIREMENTS

MANAGE INFECTIOUS AND REGULATED MEDICAL WASTE
- IDENTIFY PROPER DISPOSAL TECHNIQUES FOR REGULATED MEDICAL WASTE
- IDENTIFY SOURCE REDUCTION TECHNIQUES FOR REGULATED MEDICAL WASTE

APPLICATION/UTILIZATION OF MEDICAL TECHNOLOGY

REQUIRES FURTHER REFERENCES FROM AMEDD CENTER & SCHOOL, ATTN: MCCS-FC, FT SAM HOUSTON, TX OR THE DCDD WEBSITE: http://dcdd.amedd.army.mil/index1.htm

PREPARE THE MEDICAL ANNEX TO AN OPERATION ORDER
- PREPARE HEALTH SERVICES ANNEX INCLUDING SERVICE SUPPORT, PATIENT EVACUATION, TREATMENT AND HOSPITALIZATION.
- MISCELLANEOUS—CP LOCATIONS, COMMUNICATIONS, JOINT INTERNATIONAL OR HOST AGREEMENTS. ALSO INCLUDED ARE: OVERLAYS AND PVNTMED.

L-9. Semiannual Combat Medic Skills Validation Test

a. The Army Surgeon General has directed that all 91W health care specialists validate their skill proficiency semiannually. The Semiannual Combat Medic Skills Validation Test (SACMS-VT) will be administered at least twice a year with a minimum of 4 months separating record of events. Commander may administer the SACMS-VT more than twice a year, but must indicate beforehand when results are for record purposes.

b. The SACMS-VT documents the 91W's level of proficiency in critical medical skills and provides the impetus for sustainment training to maintain readiness. Commanders will find that this test facilitates the EMT-B civilian biannual certification process and ties in additional critical battlefield treatment modalities. Detailed information for the test is provided in soon-to-be published Training Circular (TC) 8-800, Semiannual Combat Medic Skills Validation Test. The TC can be obtained by accessing the 91W website: http://www.cs.amedd.army.mil/91w/default.htm.

Section III. DENTAL–LEAD TREATMENT AND CLINICAL DIAGNOSTIC SUPPORT MODULES

L-10. Comprehensive Dental Officer (63B00 DC)

The dental officer leading the area support squad of an Echelon II MTF is accredited by the American Dental Association to provide comprehensive oral health care. He examines, diagnoses, and treats diseases, injuries and defects of teeth, jaws and oral cavity, and supporting structure. The dental officer also provides technical supervision of assigned dental, medical laboratory, and radiology personnel and insures the efficacy of their technical capability.

L-11. Dental Specialist (91E)

a. The 91E assigned to the dental element of the area support squad, serves as an integral member of the dental team by combining the skills of soldier and dental caregiver.

b. This specialist assists the dental officer in prevention, examination, and treatment of disease of teeth and oral region, and assist with the management of the dental facility. The 91E receives patients, prepares the dental operatory, selects and arranges instruments, measures and records temperature blood pressure and pulse, and assists dentist during patients exams. Assist with the administration of anesthesia and in placement and removal of sutures. Prepares restorative and impression material. Performs cardiopulmonary resuscitation. Performs dental radiography. Performs preventive maintenance on dental equipment. Sets up, maintains, disassembles, and packs dental field equipment shelters.

L-12. Core Competencies/Critical Tasks and Training for the 91E

a. The 91Es of medical companies/troops must be trained in several areas of core competencies as outlined below. These core competencies are clinically focused requiring specific skills that establishes the scope and depth of clinical practices required by the AMEDD Dental Service.

b. Tables L–7 below contain the core competency and critical task list to be used by the commander in the development of the unit's dental proficiency training program. Proficiency training for the dental specialist will be conducted annually. Such training will be conducted under the auspices of a certified dentist. The medical company/troop commander, in collaboration with the senior dental officer, will establish a continuing education program for the dental specialist. Such training will be conducted annually.

Table L-7. 91E Core Competency/Critical Task List

GENERAL DENTAL CORE COMPETENCY TASKS

1. SET UP FIELD DENTAL OPERATING/TREATMENT UNIT
2. PERFORM BASIC LIFE SUPPORT PROCEDURES
3. MEASURE AND RECORD PATIENT'S VITAL SIGNS
4. PREPARE PATIENT FOR DENTAL TREATMENT
5. PREPARE MATRIX BANDS
6. PREPARE DENTAL MATERIAL IN ACCORDANCE WITH MANUFACTURER'S INSTRUCTIONS
7. STERILIZE DENTAL ITEMS
8. PROCESS STERILIZED DENTAL ITEMS
9. PREPARE PATIENT FOR DENTAL TREATMENT
10. PERFORM FOUR-HANDED DENTISTRY TECHNIQUES
11. PREPARE A RESTORATIVE PROCEDURE SETUP
12. SETUP COMPRESSOR/HYDRATOR
13. OPERATE COMPRESSOR/HYDRATOR

DENTAL CORE COMPETENCY CLINICAL TASKS

14. PREPARE A DENTAL LOCAL ANESTHETIC SETUP
15. PREPARE SURFACE DISINFECTION
16. PREPARE PATIENT FOR BASIC DENTAL EXAMINATION
17. SET UP FIELD SURGICAL SCRUB SINK
18. ASSIST IN MANAGEMENT OF CHAIR-SIDE EMERGENCIES
19. PREPARE OPERATIVE SITE
20. PREPARE AMALGAM RESTORATIVE MATERIAL
21. RETRACT SOFT TISSUE DURING DENTAL PROCEDURES
22. PROVIDE SUCTION DURING DENTAL PROCEDURES
23. PREPARE COMPOSITE RESIN MATERIAL
24. PREPARE IMMEDIATE RESTORATIVE MATERIAL
25. STORE ALL INSTRUMENTS TO MAINTAIN STERILE CONDITIONS
26. PROVIDE DENTAL PROPHYLAXIS WITH PROPHY CUP AND MINIMAL HAND SCALING TO REMOVE SUP-RAGINGIVAL/DEPOSITS FOR PATIENTS
27. PREPARE EXTRACTION SETUP
28. PROVIDE—IRRIGATION DURING DENTAL PROCEDURES
29. DRY OPERATIVE SITE WITH AIR SYRINGE
30. PREPARE ALGINATE IMPRESSION MATERIAL
31. PREPARE DENTAL CEMENT
32. OPERATE THE FIELD SURGICAL SINK
33. ASSIST IN DENTAL TECHNIQUES FOR PREVENTION OF MEDICAL EMERGENCIES

DENTAL RADIOGRAPHY CORE COMPETENCY TASKS

34. ASSEMBLE FIELD DENTAL X-RAY UNIT
35. OPERATE FIELD DENTAL X-RAY UNIT
36. PROTECT THE PATIENT AND OPERATOR THROUGH THE USE OF BARRIER TECHNIQUE
37. EXPOSE A RADIOGRAPH MANUALLY
38. PROCESS AN EXPOSED RADIOGRAPH MANUALLY
39. EXPOSE A DENTAL RADIOGRAPH USING THE PARALLELING TECHNIQUE
40. EXPOSE A DENTAL RADIOGRAPH USING THE BISECTING ANGLE TECHNIQUE
41. MOUNT A FULL MOUTH SERIES OF RADIOGRAPHS
42. PREPARE AN ENDODONTIC SETUP
43. PREPARE A PROSTHODONTIC PROCEDURE SETUP

Table L-7. 91E Core Competency/Critical Task List (Continued)

GENERAL DENTAL CRITICAL TASKS
44. PERFORM ROUTINE MAINTENANCE FOR HIGH- AND LOW-SPEED PIECES
45. DISASSEMBLE FIELD DENTAL X-RAY MACHINE
46. PACK DENTAL FIELD X-RAY MACHINE
47. DISASSEMBLE COMPRESSOR/HYDRATOR
48. DISASSEMBLE FIELD DENTAL OPERATING AND TREATMENT UNIT
49. PERFORM PREVENTIVE MAINTENANCE CHECKS AND SERVICES ON FIELD DENTAL EQUIPMENT
50. DISPOSE OF REGULATED DENTAL WASTE
51. PACK FIELD OPERATING AND TREATMENT UNIT

L-13. Radiology Specialist (91P)

a. The 91Ps assigned to the x-ray element of the area support squad, serves as an integral members of the diagnostic support team by combining the skills of soldier and clinical radiology expertise.

b. The radiology specialist—

- Operates fixed and portable radiology equipment.
- Reads and interprets radiographic request and physician orders.
- Prepares assembles and adjust instruments, materials, and equipment.
- Performs radiographic examinations of the upper and lower extremities, vertebral column, trunk, and skull.
- Performs soft tissue radiographic examinations
- Assist in performing body section radiographic procedures using conventional and computerized tomography.
- Assist in performing foreign body localization
- Assist in performing prenatal, pediatric, urogenital, and radiographic examinations of respiratory, vascular and nervous system.
- Develops radiographic film using automatic processing.
- Applies radiation, electrical, and mechanical protective measures.

- Maintains daily ledger and performs routine patient administration.
- Inspects and performs operator maintenance on radiology equipment.
- Packs and unpacks, loads and unloads radiology equipment.
- Assembles and dissembles radiology equipment and shelters.

L-14. Radiology Specialist/Sergeant Core Competencies, Critical Tasks, and Training

a. The 91P10/20s of medical company/troop must be trained/credentialed in several areas of core competencies. These core competencies in radiography techniques and procedures are examples of specific skills that establishes the scope and depth of clinical practices outlined in Table L-8 below.

b. The critical tasks listed in these tables are be used by the commander in the development of the unit's medical radiology training program for assigned radiology specialists (91P). Normally the training will be conducted under the auspices of a certified diagnostic radiologist (61R00 MC) assigned to an Echelon III MTF. The commander (medical company/troop) will make coordination, through channels, with the supporting hospital and arrange for a continuing education program to support his clinical radiology personnel. Such training/recertification should be conducted annually, METT-TC permitting.

Table L-8. Specialist/Sergeant (91P10/20) Core Competency/Critical Task List

TASK TITLE SKILL LEVELS 1&2
1. TRANSPORT A CASUALTY WITH A SUSPECTED SPINAL INJURY
2. ASSIST HEALTH CARE PROVIDER WITH TREATMENT FOR ANAPHYLACTIC SHOCK
3. ADMINISTER CARDIOPULMONARY RESUSCITATION
4. PREPARE PORTABLE RADIOGRAPHIC UNIT FOR OPERATION
5. PERFORM RESCUE BREATHING
6. MANAGE UNCONSCIOUS PATIENT
7. OPERATE MOBILE RADIOGRAPHIC UNIT
8. PREPARE FOR FIELD OPERATION IN AN NBC ENVIRONMENT
9. OPERATE DEPMEDS PORTABLE RADIOGRAPHIC UNIT
10. OPERATE FIELD CTC SCANNER
11. INITIATE INTRAVENOUS INFUSION
12. MANAGE CONVULSIVE AND/OR SEIZING PATIENT
13. PERFORM CT EXAMINATION (EXAM) OF UNENHANCED SPINE
14. MONITOR PATIENT'S CONDITION DURING ANGIOGRAPHY/INVASIVE PROCEDURE
15. X-RAY THE CHEST
16. X-RAY TRAUMA— LUMBAR SPINE
17. PERFORM CT EXAM OF ENHANCED CHEST
18. X-RAY THE CERVICAL SPINE
19. X-RAY THE PELVIS

Table L-8. Specialist/Sergeant (91P10/20) Core Competency/Critical Task List (Continued)

TASK TITLE SKILL LEVELS 1&2 (CONTINUED)

20. PROCESS FILM USING AN AUTOMATIC FILM PROCESSOR
21. OPERATE A FIELD CTC SCANNER
22. CODE PATIENT'S ID TO FILM FILE PACKETS/ENVELOPES
23. EVALUATE QUALITY OF DEVELOPED RADIOGRAPHS
24. USE UNIVERSAL PRECAUTIONS
25. PREPARE FIELD X-RAY PROCESSOR FOR OPERATION
26. PERFORM PREOPERATIONAL CHECK ON DEPMEDS PORTABLE RADIOGRAPHIC UNIT
27. PREPARE DEPMEDS RADIOGRAPHIC UNIT (CS 8952) FIELD DEPLOYABLE X-RAY SYSTEM
28. TRANSMIT IMAGES VIA SATELLITE
29. OPERATE RADIOGRAPHIC UNITS
30. PERFORM A PATIENT CARE HANDWASH
31. PREPARE AN INJECTION FOR ADMINISTRATION
32. ADMINISTER AN INJECTION (INTRAMUSCULAR, SUBCUTANEOUS, INTRADERMAL)
33. ESTABLISH A STERILE FIELD
34. APPLY IMMOBILIZATION DEVICE TO PATIENT
35. PREPARE AN AREA FOR OPERATIVE TREATMENT
36. ASSESS PATIENT CONDITION BEFORE X-RAY
37. ASSIST HEALTH CARE PROVIDER IN MANAGING CARDIAC ARREST
38. HANDLE PATIENT USING PROPER BODY MECHANICS
39. ADMINISTER OXYGEN BY MASK/CATHETER
40. ADMINISTER INTRAVENOUS CONTRAST MEDIA
41. OPERATE ANGIOGRAPHIC IMAGING EQUIPMENT
42. DIGITIZE CONVENTIONAL RADIOGRAPHIC IMAGES
43. DIGITIZE IMAGES FROM NON-RACS IMAGING MODALITIES
44. TRANSMIT IMAGES USING TELERADIOLOGY SOFTWARE AND HARDWARE
45. PERFORM CT EXAM OF UNENHANCED BRAIN
46. PERFORM CT EXAM OF UNENHANCED SINUSES
47. PERFORM CT EXAM OF UNENHANCED NECK—SOFT TISSUE
48. PRINT IMAGES
49. PERFORM CT OF TEMPORAL BONE
50. PERFORM CT EXAM OF UNENHANCED EXTREMITY
51. PREPARE OXYGEN TANK FOR PATIENT USE
52. MAINTAIN RADIOLOGY EMERGENCY EQUIPMENT TRAY/CART
53. OPERATE SPOT FILM DEVICE
54. X-RAY THE LUMBAR SPINE
55. X-RAY ABDOMEN
56. X-RAY THE HAND
57. X-RAY THE FOOT
58. OPERATE DIGITAL FLUOROSCOPIC UNIT
59. OPERATE PORTABLE C-ARM RADIOGRAPHIC/FLUOROSCOPIC UNIT
60. REPRINT CT IMAGES
61. X-RAY TRAUMA HIP
62. X-RAY THE TOES
63. MAINTAIN TECHNIQUE CHARTS FOR RADIOGRAPHIC UNIT
64. X-RAY DECUBITUS ABDOMEN
65. X-RAY DECUBITUS CHEST
66. X-RAY THE WRIST
67. X-RAY TRAUMA SHOULDER
68. X-RAY THE HIP

Table L-8. Specialist/Sergeant (91P10/20) Core Competency/Critical Task List (Continued)

TASK TITLE SKILL LEVELS 1&2 (CONTINUED)

69. X-RAY THE FEMUR
70. X-RAY THE ANKLE
71. X-RAY THE PATELLA
72. X-RAY THE SKULL
73. X-RAY FACIAL BONES
74. X-RAY THE MANDIBLE
75. X-RAY THE TEMPOROMANDIBULAR JOINTS
76. X-RAY THE ZYGOMATIC ARCHES
77. X-RAY SOFT TISSUE LARYNX
78. X-RAY THE THORACIC SPINE
79. X-RAY THE SACRUM/COCCYX
80. X-RAY THE SACROILIAC JOINT AND LUMBOSACRAL ARTICULATION
81. X-RAY THE RIBS
82. X-RAY THE SCAPULA
83. X-RAY THE SHOULDER
84. X-RAY THE HUMERUS
85. X-RAY THE ELBOW
86. X-RAY THE FOREARM
87. X-RAY FINGER OR THUMB
88. X-RAY THE CLAVICLE
89. X-RAY THE ACROMIOCLAVICULAR JOINTS
90. X-RAY THE KNEE
91. X-RAY THE LEG
92. X-RAY THE CALCANEUS
93. X-RAY THE PARANASAL SINUSES
94. X-RAY THE STERNUM
95. X-RAY THE NOSE
96. ASSIST WITH PATIENT URINARY CATHETERIZATION

TASK TITLE SKILL LEVEL 2

1. ESTABLISH RADIATION SAFETY PROGRAM
2. PREPARE PATIENT EMERGENCY EVACUATION PLAN
3. PERFORM RETAKE ANALYSIS
4. PERFORM PROTECTIVE DEVICES QUALITY CONTROL TESTS
5. DEVELOP STANDING OPERATING PROCEDURE DOCUMENT FOR A RADIOLOGY SECTION
6. MAINTAIN RADIOLOGY SUPPLIES AND EQUIPMENT
7. EVALUATE RADIOLOGY EQUIPMENT PREVENTIVE MAINTENANCE PROCEDURES
8. PERFORM COLLIMATOR QUALITY CONTROL TEST

L-15. Medical Laboratory Specialist (91K)

a. The 91Ks assigned to the medical laboratory element of the area support squad, serves as integral members of the diagnostic support team by combining the skills of a soldier and clinical laboratory expertise.

b. The medical laboratory specialist performs blood banking procedures and elementary and advanced examinations of biological and environmental specimens to aid in the diagnosis, treatment, and prevention of disease and other medical disorders. The duties the 91Ks assigned to area support squads include the following:

(1) *MOSC 91K10*. Performs elementary clinical laboratory and blood banking procedures.

(2) *MOSC 91K20*. Performs elementary blood banking and clinical laboratory procedures in hematology, immunohematology, biochemistry, serology, bacteriology, parasitology, and urinalysis.

L-16. Core Competencies of the 91K

The 91Ks of medical company/troop must be trained/credentialed in several areas of core competencies. These core competencies are examples of specific skills that establishes the scope and depth of clinical laboratory practices that are outlined in Table L-9.

Table L-9. Core Competency for Clinical Laboratory Specialists

CORE COMPETENCY IN MEDICAL LABORATORY TECHNIQUES AND PROCEDURES FOR THE 91K IS INCLUSIVE OF THE FOLLOWING FOR AN AREA SUPPORT SQUAD:

THE MEDICAL LABORATORY SPECIALIST PERFORMS CLINICAL LABORATORY PROCEDURES IN A FIELD LABORATORY COMMENSURATE WITH THE CAPABILITY OF THE FACILITY. THIS SPECIALIST AIDS THE PHYSICIAN, PA, AND OTHER MEDICAL PROFESSIONALS IN THE DIAGNOSIS, TREATMENT, AND PREVENTION OF DISEASE IN PERFORMING THE FOLLOWING:

- REPORTING ACCURATE AND RELIABLE RESULTS
- BASIC HEMATOLOGY PROCEDURES
- BASIC MICROBIOLOGY AND SEROLOGICAL PROCEDURES
- BASIC CHEMISTRY PROCEDURES
- BASIC BLOOD BANKING PROCEDURES
- SPECIMEN PROCESSING
- QUALITY CONTROL PROCEDURES

L-17. Clinical Laboratory Training

Table L-10 contains critical tasks to be used by the Commander in the development of a unit medical laboratory training program for assigned medical laboratory specialists (91K). Normally the training will be conducted under the auspices of a certified Clinical Laboratory Officer (71E67 MS) assigned to an Echelon III MTF. The Commander (medical company/troop) will make coordination, through channels, with the supporting hospital and arrange for a continuing education program to support his clinical laboratory personnel. Such training/recertification will be conducted annually.

Table L-10. 91K10/20 Critical Task List

THE MEDICAL LABORATORY TECHNICIAN (91K) MUST BE COMPETENT IN THE FOLLOWING TASKS ALONG WITH HAVING KNOWLEDGE AND TRAINING IN SETTING UP, MAINTAINING AND DEPLOYING DEPMEDS EQUIPMENT AND DEPMEDS LABORATORY EQUIPMENT. THE 91K MUST REMAIN FOCUSED ON OPERATIONAL READINESS AND ENSURE THE CORE COMPETENCY SKILLS ARE MAINTAINED. COMMUNICATION WITH THE NEXT LEVEL OF CARE IS IMPERATIVE TO SUSTAIN EQUIPMENT READINESS AND TRAINING

1. PERFORM ROUTINE URINALYSIS
FOCUSED ASSESSMENT, COLOR AND APPEARANCE, PH AND SPECIFIC GRAVITY, IDENTIFICATION OF URINARY SEDIMENTS AND THEIR SIGNIFICANCE, ANALYZE AND INTERPRET COLOR REACTIONS ON DIPSTICK, CONFIRMATION TESTING, MICROSCOPIC EXAMINATION, QUALITY CONTROL

2. PERFORM BASIC HEMATOLOGY
FOCUSED ASSESSMENT, OBTAINING BLOOD SPECIMENS (CAPILLARY AND VENOUS), MICROHEMATOCRITE DETERMINATION, MANUAL WBC, PLATELET ESTIMATE AND RBC COUNT BY UNNA-PAPPENHEIM STAIN, WRIGHT'S STAIN, GIEMSA STAIN FOR THE PRESENCE OF MALARIAL PARASITE, QUALITY CONTROL

3. PERFORM BASIC MICROBIOLOGY
FOCUSED ASSESSMENT, GRAM STAIN, CONCENTRATION TECHNIQUES FOR OVA, CYSTS AND PARASITES, MACROSCOPIC EXAMINATION OF FECES AND TEST FOR OCCULT BLOOD, SKIN SCRAPING USING KOH OR NAOH, QUALITATIVE PREGNANCY TEST, RAPID PLASMA REAGIN (RPR), THROAT CULTURE, INFECTIOUS MONONUCLEOSIS, QUALITY CONTROL

4. PERFORM BASIC CHEMISTRY
FOCUSED ASSESSMENT, USE CHEMICAL ANALYZER TO DETERMINE CHEMICAL ANALYTES (ELECTROLYTES, AMYLASE, BILIRUBIN, BUN, CREATININE, AST, ALT, GLUCOSE), BLOOD GAS, QUALITY CONTROL

5. PERFORM BASIC BLOOD BANKING
FOCUSED ASSESSMENT, RECEIVING, STORING AND ISSUING BLOOD PRODUCTS. PERFORM AN IMMEDIATE SPIN CROSS MATCH. PERFORM VENOUS PUNCTURE FOR BLOOD COLLECTION

Section IV. MENTAL HEALTH CLINICAL SUPPORT MODULES

L-18. Psychiatrist (60W00 MC)

The psychiatrist assigned to the divisional MH section of an Echelon II MTF is a licensed medical doctor and is credentialed in psychiatry. This medical corps officer examines, diagnoses, and treats or provides courses of treatment for personnel suffering from emotional or mental illness, mental retardation, or situational maladjustment. This chief of section serves as the division psychiatrist (staff advisor). He also provides technical supervision of assigned MH personnel and insures the efficacy of their technical capability.

L-19. Social Worker (73A67 MS)

The social worker assigned to the MH section of an Echelon II MTF holds a master's degree in social work and is credentialed by the Council on Social Work Education. This officer performs social work functions

which include: providing critical event debriefing, psychological autopsies, suicide prevention, clinical counseling, disaster relief, civil affairs, crisis intervention, substance abuse intervention, teaching and training, supervision, research, administration, consultation, and policy development in various military settings. These functions are provided to enhance unit readiness and the emotional well-being of service members, their eligible family members, and DA civilians as appropriate. He also teaches and provides technical guidance for behavioral science personnel.

L-20. Clinical Psychologist (73B67 MS)

The Clinical psychologist assigned to the MH section of an Echelon II MTF holds a PhD in clinical psychology, and counseling psychology. He is a licensed psychologist, credentialed by the American Psychological Association. This health professional applies psychological principles, theories, methods, and techniques through direct patient services, consultation, education, and research to human effectiveness, adjustment, and emotional disturbance in medical and other settings; investigation, evaluation and amelioration of mental and behavioral disorders; prevention of mental illness; and promotion of effective MH. He also teaches and provides technical guidance for behavioral science personnel.

L-21. Mental Health Specialist (91X)

The mental health specialist under the supervision of a psychiatrist, social worker, psychiatric nurse, and/or psychologist assists with the management and treatment in in/outpatient MH activities; during peacetime or mobilization; collects and records psychosocial and physical data; counsels and treats clients/patients with personal, behavioral, or MH problems. Duties for the 91X at each military occupational specialty code (MOSC) are as follows:

a. *MOSC 91X*. Under close supervision, collects and records psychosocial and physical data, assists with care and treatment of psychiatric, drug and alcohol patients, and counsels client/patient with personal, behavioral, or psychological problems.

b. *MOSC 91X20*. Collects and records psychosocial and physical data and assists with care and treatment of psychiatric, drug and alcohol patients, and counsels clients/patients with personal, behavioral, or psychological problems.

c. *MOSC 91X30*. Collects and records psychosocial and physical data and assists with care and treatment of psychiatric, drug and alcohol patients, and counsels clients/patients with personal, behavioral, or psychological problems and assists with management of mental health activity.

d. *MOSC 91X40*. Assists professional staff with management and supervision of patient treatment in in/outpatient mental health activities. Assist professional staff in the supervision of patient treatment programs, personnel matters, supply economy procedures, fiscal, technical, and administrative matters.

L-22. Core Competencies of the 91X

The behavioral science specialist of medical companies must be trained/credentialed in several areas of core competencies. These core competencies are examples of specific skills that establish the scope and depth of clinical practices that are outlined in Table L-11.

Table L-11. Core Competency for Behavioral Specialists

CORE COMPETENCY IN BEHAVIORAL SCIENCE TECHNIQUES AND PROCEDURES FOR THE 91X IS TO TRIAGE, EVALUATE, COUNSEL AND/OR TREAT STRESSED PATIENTS. THE PRIMARY TECHNIQUES AND PROCEDURES USED INCLUDE THE FOLLOWING:

- MAXIMIZE PREVENTION TO CONTROL (AND WHEN FEASIBLE, REDUCE) STRESSORS THAT ARE KNOWN TO INCREASE BF AND MISCONDUCT STRESS BEHAVIOR.
- TREAT BF IN THE SITUATIONAL AREAS OF *PROXIMITY, IMMEDIACY, EXPECTANCY,* AND S*IMPLICITY.*

EXAMPLES:

A. *PROXIMITY* REFERS TO THE NEED IN TREATING SOLDIERS AS CLOSE TO THE UNIT AND BATTLE AS POSSIBLE. IT IS A REMINDER THAT OVER EVACUATION SHOULD BE PREVENTED.
B. *IMMEDIACY* INDICATES THAT BF REQUIRES TREATMENT IMMEDIATELY.
C. *EXPECTANCY* RELATES TO THE POSITIVE EXPECTATION PROVIDED TO BF CASUALTIES FOR THEIR FULL RECOVERY AND EARLY RETURN TO DUTY.
D. *SIMPLICITY* INDICATES THE NEED FOR USING SIMPLE, BRIEF, STRAIGHTFORWARD METHODS TO RESTORE PHYSICAL WELL-BEING AND SELF CONFIDENCE BY USING NONMEDICAL TERMINOLOGY AND TECHNIQUES.

L-23. Mental Health Specialty Training

Tables L-12 and L-13 contain the critical tasks to be used by the unit commander and the senior mental health officer in the development of a unit medical training program for assigned 91X personnel.

Table L-12. 91X10/20 Critical Task List

1. **PERFORM CASUALTY EVALUATION**
   TRIAGE CASUALTY TO DETERMINE STATUS

2. **PERFORM RESTRAINTS**
   RESTRAIN PATIENTS WHO POSE A THREAT TO OTHERS

3. **PERFORM CASUALTY ASSESSMENT/SEPARATION**
   A. ASSESS CASUALTIES AND DATA OBTAINED TO DETERMINE FUNCTIONAL CAPACITY, APPROPRIATE TREATMENT, AND OR RTD

Table L-12. 91X10/20 Critical Task List (Continued)

B. SEPARATE STRESS AND MISCONDUCT COMBAT STRESS BEHAVIOR (MCSB) CASES FROM PSYCHIATRIC, WOUNDED, AND SICK PATIENTS

4. PERFORM ADMINISTRATIVE ACTIONS

A. PREPARE BF AND NP CASES FOR EVACUATION OR TRANSFER
B. COORDINATE RTD OF MCSB AND RECOVERED BFC TO ORIGINAL OR ALTERNATE UNIT

Table L-13. 91X30/40 Critical Task List

PERFORM SUPERVISION AND IMPLEMENTATION OF THE ORGANIZATION'S PREVENTIVE MENTAL HEALTH PROGRAM

A. TRAIN PHYSICIANS AND PHYSICIAN ASSISTANTS TO PERFORM NP TRIAGE.
B. COORDINATE THROUGH MEDICAL COMPANY'S HEADQUARTERS FOR ADDITIONAL CSC SUPPORT FROM THE SUPPORTING MEDICAL BRIGADE.
C. MAINTAIN COORDINATION WITH SUPPORTED UNITS AND HIGHER HQ TO PREDICT POSSIBLE BF AND STRESS CASUALTIES.
D. PREPARE CSC ESTIMATE OF TACTICAL SITUATION.
E. COORDINATE TRAINING WITH SUPPORTED FORCES HQ FOR COMBAT STRESS MANAGEMENT AND PREVENTION.
F. COORDINATE CRITICAL INCIDENT STRESS DEBRIEFING OF TEAMS, CREWS, SQUADS, AND PLATOONS AT RECONSTITUTION SITES.
G. FORWARD STATUS REPORT TO COMPANY HQ IAW TSOP.

Section V. PREVENTIVE MEDICINE SUPPORT MODULES

L-24. Preventive Medicine Officer (60C00 MC)

The PVNTMED officer leading the section of an Echelon II MTF is a practicing medical doctor, credentialed in public health science. He determines status of, and conditions influencing, health of military and appropriate civilian personnel; formulates and recommends measures for health improvements; and plans, coordinates, and directs a program designed to maintain health, improve physical fitness, and prevent disease and injury. This practicing physician also provides technical supervision of assigned professional and paraprofessional personnel, and insures the efficacy of their technical capability.

L-25. Environmental Science Officer (72D67 MS)

The environmental science officer advises or performs professional and scientific work in environmental health and industrial hygiene. Functions include: identification, evaluation, and formulation of

recommendations for the control of potential health hazards; health hazard assessment of weapons, equipment, clothing, training devices and materiel systems; development of environmental health and industrial hygiene criteria and standards; promotion of policies, programs, practices, operations directed toward the prevention of disease, illness, and injury. The environmental science officer also ensures the establishment of protocols for the training of 91S personnel.

L-26. Preventive Medicine Specialist (91S)

The PVNTMED specialist conducts or assists with PVNTMED inspections, surveys, control operations, and PVNTMED laboratory procedures, supervises PVNTMED facilities, or serves on PVNTMED staff. The duties for 91S at each skill are as follows:

a. *MOSC 91S/20*. Conducts PVNTMED inspection, surveys and controls operations and assists with PVNTMED laboratory procedures. Additionally, the 91S20 supervises subordinate personnel in the performance of their duties.

b. *MOSC 91S30*. Conducts PVNTMED inspection, surveys and controls operations and assists with PVNTMED laboratory procedures. Organizes water, food sanitation, hospital environment, entomological, epidemiology, and environmental stress surveillance programs. Analyzes and evaluates collected data. Supervises technical and administrative functions of PVNTMED activities.

c. *MOSC 91S40*. Supervises medium size PVNTMED services or medical team/detachments. Assists with development of unit defense plans and operational orders. Reviews and make appropriate recommendations on doctrine and training literature. Maintains intelligence information and records. Establishes quality control procedures for inspection programs and laboratory analysis. Develops community health education programs. Evaluates existing PVNTMED programs and modifies as necessary to meet the needs of the population served.

Section VI. OPTOMETRY CLINICAL SUPPORT MODULES

L-27. Optometry Officer (67F00 MS)

The optometry officers (67F MS) in the optometry section of the DSMC, MSMC and the medical company of the HSB are a primary health care provider in Echelons II and above MTFs. These certified practicing optometrists, independently conduct examination to detect, prevent, diagnose, and manage ocular related disorders; that is, injuries, diseases, and visual dysfunctions. Uses diagnostic and therapeutic pharmaceutical agents (TPA) medical/surgical instruments. Prescribes spectacle and medical related contact lenses, TPA and other therapy. Their duties include consultation in such areas as occupational vision and the diagnosis and treatment of battlefield laser-induced injuries. The senior optometry officer/chief of section provides technical supervision of assigned clinical personnel and insures the efficacy of their technical capability.

L-28. Eye Specialist (91WP3)

a. The eye specialist (91WP3) and the eye sergeant (91W20) perform routine diagnostic tests and assist in the care of ophthalmology or optometry patients. As optometry specialist these duties are conducted under the auspices of an optometrist or ophthalmologist.

b. As 91Ws these specialists also perform emergency and evacuation care under the medical direction of a physician or other credentialed providers. Serves as a clinical technician in inpatient and outpatient areas of MTFs. Performs basic force health protection care for individual soldiers and small units. Is trained for combat and other operational environments. Conducts casualty triage and provides medical care for patients in all operational environments to include enroute care during ground and air ambulance evacuations. The 91W is certified to the national standards of EMT-B. Refer to Section II above.

L-29. Core Competencies of the 91WP3

The eye specialist (91WP3) of medical companies must be trained in several areas of core competencies. These core competencies are examples of specific skills that establishes the scope and depth of tactics, techniques, and procedures that are outlined in Tables L-14 below.

Table L-14. Core Competency for Eye Specialists

CORE COMPETENCY IN EYE SPECIALTY TECHNIQUES AND PROCEDURES FOR THE 91WP3 IS INCLUSIVE OF THE FOLLOWING:
• PATIENT SCREENING • HISTORY TAKING • TONOMETRY • LENSOMETRY • PHOTOGRAPHY

L-30. Training for the 91WP3

Table L-15 below contains the critical tasks to be used by the optometry chief of section in the development of training program for assigned 91WP3 personnel. Also the unit commander will ensure that these personnel comply with the 91W continued education and training program as outlined in Paragraph L-8 and Table L-4 above.

Table L-15. 91WP310/20 Critical Task List

FIELD-SPECIFIC TASKS
- ASSEMBLE A FIELD COMBAT OPTOMETRY SET
- DISASSEMBLE A FIELD OPTOMETRY SET

ADMINISTRATIVE TASKS
- MAINTAIN AN EYE CLINIC HAND RECEIPT ACCOUNT
- MAINTAIN THE EYE CLINIC FORMS SUPPLY
- MAINTAIN THE EYE CLINIC PUBLICATIONS LIBRARY
- ORDER EYE CLINIC EQUIPMENT
- ORDER EYE CLINIC SUPPLIES
- SCHEDULE EYE CLINIC APPOINTMENTS
- MONITOR EYE CLINIC SCHEDULES
- PREPARE EYE CLINIC COMPOSITE HEALTH CARE SYSTEM REPORTS
- PREPARE EYE CLINIC SPECTACLE REQUEST TRANSMISSION SYSTEM REPORTS

PRESCRIPTION EYEWEAR TASKS
- ORDER PRESCRIPTION EYEWEAR
- MAINTAIN PRESCRIPTION EYEWEAR ORDER FILES
- DISPENSE PRESCRIPTION EYEWEAR
- RECEIVE PRESCRIPTION EYEWEAR
- INSPECT COMPLETED PRESCRIPTION EYEWEAR
- PERFORM REPAIRS AND ADJUSTMENTS ON PRESCRIPTION EYEWEAR

CLINICAL TASKS
- CONDUCT AN EYE CLINIC PRE-EXAMINATION PATIENT SCREENING
- CONDUCT AN OPTOMETRIC PHYSICAL SCREENING
- CONDUCT AN OPTOMETRIC SCREENING FOR A DOD MEDICAL EVALUATION REVIEW BOARD CANDIDATE
- CONDUCT AN OPTOMETRIC PHYSICAL SCREENING FOR AVIATION CANDIDATE
- ADMINISTER DOCTOR-ORDERED TREATMENT FOR OCULAR INJURIES
- ADMINISTER DOCTOR-ORDERED TREATMENT FOR OCULAR BURNS
- ADMINISTER DOCTOR-ORDERED TREATMENT FOR OCULAR DISEASES
- INITIATE EMERGENCY TREATMENT FOR A CHEMICAL BURN OF THE EYE
- REMOVE NONEMBEDDED FOREIGN BODIES FROM THE CONJUNCTIVA OR CORNEA
- CONDUCT VISUAL FIELD TEST
- PERFORM OCULAR A/B SCAN
- PERFORM OCULAR PHOTOGRAPHY
- CONDUCT A FLUORESCEIN ANGIOGRAPHY
- ADMINISTER A TEAR FLOW TEST
- TRIAGE EYE EMERGENCIES
- PERFORM OPERATOR MAINTENANCE ON OPHTHALMIC EQUIPMENT
- CALIBRATE THE EYE CHART
- DISPENSE CONTACT LENS

SURGICAL TASKS
- CONDUCT AN OCULAR SURGERY PREOPERATIVE SCREENING
- PREPARE FOR A MAJOR OCULAR SURGICAL PROCEDURE
- PREPARE FOR A MINOR OPHTHALMIC SURGICAL PROCEDURE
- PREPARE FOR OCULAR LASER TREATMENT
- ASSIST THE DOCTOR DURING OCULAR SURGERY
- CONDUCT AN OCULAR SURGERY POSTOPERATIVE CLEANUP
- CONDUCT AN OCULAR SURGERY POSTOPERATIVE SCREENING
- RECEIVE OPHTHALMIC SURGICAL SETS FROM CENTRAL MATERIAL SERVICE

L-31. Optical Laboratory Specialist (91H10)

The optical laboratory specialist assembles spectacles utilizing presurfaced single-vision lens; surfaces multivision lens and assembles multivision spectacles; repairs and fabricates spectacles; and maintains tools and equipment.

GLOSSARY

ABBREVIATIONS, ACRONYMS, AND DEFINITIONS

A2C2 Army airspace command and control

AASLT air assault

ABC airway, breathing, circulation

ABCA American, British, Canadian, and Australian

ABCS Army Battle Command Systems

abn airborne

ACR armored cavalry regiment

ACS armored cavalry squadron

ACUS Area Common-User System

admin administrative

advanced trauma management (ATM) Resuscitative and stabilizing medical or surgical treatment provided to patients to save life or limb and to prepare them for further evacuation without jeopardizing their well-being or prolonging the state of their condition.

AELT air evacuation liaison team

AFMIC Armed Forces Medical Intelligence Center

AIR STD air standardization agreement

AM amplitude-modulated

amb ambulance

ambulance control point The ambulance control point consists of a soldier (from the ambulance company or platoon) stationed at a crossroad or road junction where ambulances may take one of two or more directions to reach loading points. The soldier, knowing from which location each loaded ambulance has come, directs empty ambulances returning to the rear. The need for control points is dictated by the situation. Generally, they are more necessary in forward areas.

ambulance exchange point (AXP) A location where a patient is transferred from one ambulance to another en route to an MTF. This may be an established point in an ambulance shuttle or it may be designated independently.

ambulance loading point This is a point in the shuttle system where one or more ambulances are stationed ready to receive patients for evacuation.

ambulance relay point This is a point in the shuttle system where one or more ambulances are stationed ready to advance to a loading point or to the next relay point to replace an ambulance that has moved from it. As a control measure, relay points are generally numbered from front to rear.

ambulance shuttle system The shuttle system is an effective and flexible method of employing ambulances during combat. It consists of one or more ambulance loading points, relay points, and when necessary, ambulance control points, all echeloned forward from the principal group of ambulances, the company location, or basic relay points as tactically required.

AMEDD Army Medical Department

AMEDDC&S Army Medical Department Center and School

AML area medical laboratory

AN Army Nurse Corps

ANCD automated net control device

AO area of operations

AOE Army of Excellence

AOR area of responsibility

AR Army regulation

ARPERCEN Army Reserve Personnel Center

ARPERSCOM Army Reserve Personnel Command

ARSOF Army Special Operations Forces

ARTEP Army Training and Evaluation Program

ASL authorized stockage list

ASMB area support medical battalion

ASMC area support medical company

ASMD area support medical detachment

asst assistant

ATLS® Advanced Trauma Life Support

ATM *See* advanced trauma management.

attn attention

augmentation A command relationship. Units that are designated to augment another unit are, therefore, not available to the losing command for the period of augmentation.

AXP *See* ambulance exchange point.

BAS battalion aid station

BCIS battlefield combat identification system

BCIS–NS battlefield combat identification system–node switch

BCOC base cluster operations center

BCT brigade combat team

bde brigade

behav behavioral

BF battle fatigue

BFC battle fatigue casualty

BLS basic life support

BMSO brigade medical supply office

brigade support area (BSA) A designated area from which combat service support elements from DISCOM and corps support command provide logistics support to the brigade. The BSA normally is located 20 to 25 kilometers behind the forward edge of the battle area.

BSA *See* brigade support area.

BSB brigade support battalion

BSMC brigade support medical company

BSS brigade surgeon's section

BW biological warfare

C2 command and control

C3 command, control, and communications

C4I command, control, communications, computers, and intelligence

casualty Any person who is lost to his organization by reason of having been declared dead, wounded, injured, diseased, interned, captured, retained, missing, missing in action, beleaguered, besieged, or detained.

casualty collection point A specific location where casualties are assembled to be transported to a medical treatment facility. It is usually predesignated and may be either staffed or not. The echelon designating the point provides the staffing.

casualty evacuation is a term used by nonmedical units to refer to movement of casualties aboard nonmedical vehicles or aircraft. Casualties transported in this manner do not receive en route medical care.

CBT combat

CDR commander

CE communications-electronics

CEMR civilian employee medical record

CHL combat health logistics

CHPPM Center for Health Promotion and Preventive Medicine

CHS *See* combat health support.

CIP combat identification panel

clr clearing

cmd command

CME continuing medical education

CMO civil-military operations

CNR combat net radio

co company

COA course(s) of action

combat health support (CHS) All support services performed, provided, or arranged by the Army Medical Department to promote, improve, conserve, or restore the mental and/or physical well-being of personnel in the Army and, as directed, in other services, agencies, and organizations. These services include, but are not limited to, the management of health service resources such as manpower, monies, and facilities; preventive and curative health measures; the health service doctrine; evacuation of the sick (physically and mentally), injured and wounded, selection of the medically unfit; medical supply, equipment, and maintenance thereof; and medical dental, veterinary laboratory, optometry, and medical food services.

combat service support (CSS) The assistance provided to sustain combat forces, primarily in the fields of administration and logistics. It includes administrative services, chaplain services, civil affairs, food service, finance, legal services, maintenance, health service support, supply, transportation, and other logistical services.

combat support (CS) Consists of fire support and operational assistance provided to combat elements. It includes field artillery, air defense artillery, engineer, military police, signal, military intelligence, and chemical.

combat trains Is the portion of the unit trains that provides combat service support required for immediate response to the needs of forward tactical elements. At company level, health service support, recovery, and maintenance elements normally constitute the combat trains. At battalion, the combat trains normally consist of ammunition and petroleum, oils, and lubricates, vehicles, maintenance/recovery vehicles and crews, and the battalion aid station. (*See also* field trains; unit trains.)

combat zone (CZ) (1) That area required by combat forces for the conduct of operations. (2) The territory forward of the Army rear boundary.

communications zone (COMMZ) Rear area of the theater of operations (behind but contiguous to the combat zone) which contains the lines of communication, establishments for supply and evacuation, and other agencies required for the immediate support and maintenance of the field forces.

COMMZ *See* communications zone.

company aid post A company aid post is a designated location on the battlefield where a combat medic provides emergency medical treatment to casualties awaiting evacuation. This point is similar to the collecting point (patient) except that it is manned by one of the company combat medics or medical platoon's aide/evacuation team.

COMSEC communications security

constructive patients In training situations, these are representation of patients in reports, messages, or other written and oral communications; they do not require physical movement of care.

CONUS continental United States

COSC combat operational stress control

COTS commercial off-the-shelf

CP command post

CRP common relevant picture

CPR cardiopulmonary resuscitation

CRT control receiver-transmitter

CS *See* combat support.

CSAR combat search and rescue

CSH combat support hospital

CSOP clinical standing operating procedure

CSS *See* combat service support.

CSSCS Combat Service Support Control System

ctrl control

CW chemical warfare

CZ *See* combat zone.

DA Department of the Army

DABS division aviation brigade support

DAGR Defense Advance Global Positioning System Receiver

DC Dental Corps

DD Department of Defense

DDL Daily Disposition Log

DE directed energy

decon decontamination

DIG digitized

DISCOM division support command

div division

division support area (DSA) An area normally located in the division rear area positioned near air-landing facilities and along the main supply route. The division support area contains the division support command post, headquarters elements of the division support command battalions, and those division support command elements charged with providing backup support to the combat service support elements in the brigade support area and direct support units located is the division rear. Selected corps support command elements in the division may be located in the division support area to provide direct support backup and general support as required.

DLA Defense Logistics Agency

DMLSS-AM Defense Medical Logistics Standard Support

DMOC division medical operations center

DMSO division medical supply office(r)

DNBI disease and nonbattle injury

DNVT digital nonsecure voice telephone

DOA dead on arrival

DOD Department of Defense

DODD Department of Defense Directive

DODI Department of Defense Instruction

DS direct support

DSA *See* division support area.

DSMC division support medical company

DSS division surgeon's section

DTF dental treatment facility

DTG date time group

DVE driver's vision enhancer

EAB echelons above brigade

EAC echelons above corps

EBL estimated blood loss

Echelon I (Level I) Unit level—The first medical care a soldier receives is provided at this level. This care included immediate lifesaving measures, advanced trauma management, disease prevention, combat stress prevention, casualty collection, and evacuation from supported unit to supporting medical treatment facility. Echelon I elements are located throughout the combat and communications zones. These elements include the combat lifesaver, combat medic, and battalion aid station. Some or all of these elements are found in combat, combat support, and combat service support units. When Echelon I capability is not organic to a unit then this support is provided that unit by the supporting Echelon II medical unit.

Echelon II (Level II) Duplicates Echelon I and expands services available by adding dental, laboratory, x-ray, and patient holding capabilities. Emergency care, advanced trauma management, including urgency initial surgery with forward surgical team augmentation. Echelon II units are located in the combat zone—brigade/regimental support area, corps support area, and communication zone. Echelon II medical support may be provided by clearing stations of divisional and nondivisional medical companies/troops.

Echelon III (Level III) This echelon of support is provided in the corps . Echelon III expands the support provided at Echelon II (division-level). Casualties who are unable to tolerate and survive movement over great distances will receive definite care in hospitals close to the division rear boundary as the tactical situation will allow. Echelon III hospitalization is provided by the combat support hospital. Operational conditions may require hospitals to locate in offshore support facilities, third country support bases, or in the communication zone.

Echelon IV (Level IV) This echelon of support is provided in the communication zone by the combat support hospital. It provides further treatment to stabilize those patients requiring evacuation to the continental United States. This echelon also provides resuscitative and definitive care of soldiers located in the communication zone.

echelon of care A North Atlantic Treaty Organization term which can be used interchangeably with the term *level of care*.

EIC electronic information carrier

emergency medical treatment (EMT) The immediate application of medical procedures to the wounded, injured, or sick by specially trained medical personnel.

EMT *See* emergency medical treatment.

EMT-B emergency medical treatment (technician)—basic

EN electronic notebook

env environmental

EOH equipment on hand

EPLRS Enchanced Position Location Reporting System

EPW enemy prisoner(s) of war

equip equipment

evac evacuation

evacuation policy A command decision indicating the length in days of the maximum period of non-effectiveness that patients may be held within the command for treatment. Patients, who, in the opinion of the responsible medical officers, cannot be returned to duty status within the period prescribed are evacuated by the first available means, provided the travel involved will not aggravate their disabilities.

F Fahrenheit

FAX facsimile

FBCB2 Force XXI Battle Command Brigade and Below

FEBA forward edge of the battle area

field trains is the combat service support portion of a unit at company and battalion level that is not required to respond immediately. At company level, supply and mess teams normally will be located in the field trains A battalion's field trans may include mess teams, a portion of the supply

section of the support platoon, a maintenance element, as well as additional ammunition and petroleum, oils and lubricants. Positions of the field trains is dependent on such factors as the type of friendly operation underway, available suitable terrain, and intensity of enemy activity in the area. (*See also* combat trains; unit trains.)

first aid Urgent and immediate lifesaving or other measures which can be performed for casualties (or performed by the victim himself) by nonmedical personnel when medical personnel are not immediately available.

1SG first sergeant

fld field

FLOT forward line of own troops

FM frequency-modulated; field manual

FMC US Field Medical Card (DD Form 1380)

FMTV Family of Medium Tactical Vehicles

forward arming and refueling point (FARP) A temporary facility that is organized, equipped, and deployed by an aviation unit commander, and located closer to the area of operations than the aviation units combat service support area. It provides fuel and ammunition necessary for the employment of helicopter units in combat.

FSB forward support battalion

FSE forward support element

FSMC forward support medical company

FSMT forward support medical evacuation team

FST forward surgical team

FX fracture(s)

G1 Assistant Chief of Staff, G1 (Personnel)

GC Geneva Convention Relative to the Protection of Civilian Internees in Time of War

GCSS-A Global Combat Support System-Army

general support (GS) A general support unit provides support to the total force, not to any particular subdivision. Therefore, subdivision may not directly request support from the general support unit. Only the supported force headquarters may determine priorities and assign missions or tasks to the general support unit. A general support unit has no command relationship with the supported unit or force.

GOTS government off-the-shelf

GPS global positioning system(s)

GPW Geneva Convention Relative to the Treatment of Prisoners of War

GRC ground radio communications

GS *See* general support.

GTN global traffic network

GWS Geneva Convention for the Amelioration of the Condition of the Wounded and Sick in the Armed Forces

GWS (SEA) Geneva Convention for the Amelioration of the Condition of the Wounded, Sick, and Shipwrecked Members of the Armed Forces at Sea

HA heart attack

hldg holding

hlth health

HMMWV high-mobility multipurpose wheeled vehicle

HN host nation

HQ headquarters

HREC health record

HSB heavy separate brigade

HSMO health service materiel officer

HSSO health service support officer

HX history

IAW in accordance with

IBCT interim brigade combat team

IHFR improved high-frequency radio

IIF informal information flow

initial point of treatment Any point within the combat health support system at which a soldier is seen and treated by trained medical personnel

IR infrared

IV intravenous

JTF joint task force

kbps kilobits per second

kg kilogram

kHz kilohertz

KIA killed in action

km kilometers

LAB laboratory

ldr leader

lines of patient drift Natural routes along which wounded soldiers may be expected to go back for medical care from a combat position

LOC lines of communication

LOG logistical; logistics

LOGPAC logistical package

LZ landing zone

MA mortuary affairs

maint maintenance

MASCAL mass casualty

MC Medical Corps

MC4 Medical Communications for Combat Casualty Care

MCO movement control office(r)

MCSB misconduct combat stress behavior

MCT movement control team

MDT Medical Detachment Telemedicine

med medical

MEDCOM medical command

MEDDAC medical department activity

MEDEVAC medical evacuation

medical equipment set (MES) A chest containing medical instruments and supplies designed for specific table of organization and equipment units or specific missions.

medical treatment facility (MTF) Any facility established for the purpose of providing medical treatment. This includes battalion aid stations, clearing stations, dispensaries, clinics, and hospitals.

MEDLAB medical laboratory

MEDLOG medical logistics

MEDLOG–D medical logistics–division

MEDTCU medical transportable computer unit

MES *See* medical equipment set.

METT-TC mission, enemy, terrain, troops, time available, and civilian consideration

MH mental health

MHz megahertz

MIA missing in action

MMMB medical materiel management branch

MMMC medical materiel management center

MOPP mission-oriented protective posture

MOS military occupational specialty

MOSC military occupational specialty code

MOUT military operations on urbanized terrain

MRI Medical Reengineering Initiative

MRO medical regulating office(r)

MS Medical Service Corps

MSB main support battalion

MSE mobile subscriber equipment

MSMC main support medical company

MSR main supply route

MSRT mobile subscriber radio telephone

MTF *See* medical treatment facility.

MTOE modified table of organization and equipment

MTS Movement Tracking System

NATO North Atlantic Treaty Organization

NBC nuclear, biological, and chemical

NCO noncommissioned officer

NCOIC noncommissioned officer in charge

NCS net control station

NGO nongovernmental organization

NVG night vision goggles

OCONUS outside the continental United States

off officer

op operation

OPCON *See* operational control.

operational control (OPCON) The authority delegated to a commander to direct forces assigned so that the commander may accomplish specific missions or tasks that are usually limited by function, time, or location; to deploy units concerned, and to retain or assign tactical control of those units. It does not of itself include administrative or logistic control. In the North Atlantic Treaty Organization, it does not include authority to assign separate employment of components of units concerned.

OPLAN operation plan

OPORD operation order

OPSEC operations security

opt optical

OR operating room

OTC over the counter

PA physician assistant

passage of lines Passing one unit through the position of another, as when elements of a covering force withdraw through the forward edge of the main battle area, or when an exploiting force moves through elements of the force that conducted the initial attack. A passage may be designated as a forward or rearward passage of lines.

patient (pnt) A sick, injured, or wounded soldier who receives medical care or treatment from medically trained personnel

PDA personal digital assistant

PDS Personnel Daily Summary

PE&MR Patient Evacuation and Mortality Report

PERSCOM personnel command

PERSITREP Personnel Situation Report

PhD doctor of philosophy

plt platoon

PMCS *See* preventive maintenance checks and services.

PMM preventive medicine measures

pnt *See* patient.

POL petroleum, oils, and lubricants

preventive maintenance checks and services (PMCS) Preventive maintenance checks and services is the care, servicing, inspection, detection, and correction of minor faults before these faults cause serious damage, failure, or injury. The procedures and the category of maintenance to perform PMCS are found in the –10 and –20 equipment technical manuals and lubrication orders.

PSR Patient Summary Report

PVNTMED preventive medicine

QSTAG Quadripartite Standardization Agreement

reconstitution The total process of keeping the force supplied with various supply classes, services, and replacement personnel and equipment required to maintain the desired level of combat effectiveness and of restoring units that are not combat effective to the desired combat effectiveness through the replacement of critical personnel and equipment. Reconstitution encompasses unit regeneration and sustaining support.

regt regiment

rep repair

RMC remote multiplexer combiner; radio multiplexer combiner

RMSO regimental medical supply office

RP release point; retained personnel

RPR rapid plasma reagin

RSA regimental support area

RSS regimental surgeon section

RT receiver; transmitter

RTD return to duty

S1 Adjutant (US Army)

S2 Intelligence Officer (US Army)

S3 Operations and Training Officer (US Army)

S4 Supply Officer (US Army)

SACMS-VT Semiannual Combat Medic Skills Validation Test

SAS squadron aid station

SATCOM satellite communications

sci science

SCTACST single-channel tactical satellite

sec section

SEN small extension node

SF standard form; Special Forces

SFMC Special Forces medical sergeant

SFODA Special Forces Operational Detachment A

SGT Sergeant

simulated patients In training situations, these are individuals who do not have a real wound, injury, or illness but must be physically moved or cared for to meet training and evaluation requirements.

SINCGARS single-channel ground and airborne radio system

SOF Special Operations Forces

SOI signal operation instructions

SOP standing operating procedures

SP Army Medical Specialist Corps

SPC specialist

spot report A concise narrative report of essential information covering events or conditions that may have an immediate and significant effect on current planning and operations that is afforded the most expeditious means of transmission consistent with requisite security. (Note: In reconnaissance and surveillance usage, spot report is not to be used.)

spt support

sqd squad

SQDN squadron

SSA supply support activity

SSC small scale contingency

SSG staff sergeant

sta station

STANAG *See* Standardization Agreement.

Standardization Agreement (STANAG) The acronym for a North Atlantic Treaty Organization Standardization Agreement. The North Atlantic Treaty Organization consists of 15 member nations allied together for military interoperability in both equipment and methods of operations. As each standardization agreement is adopted, it becomes a part of each nation's unilateral procedures and is incorporated into national doctrinal and procedural publications.

STD sexually transmitted diseases

sup supply

support An action that aids, protects, complements, or sustains another force in accordance with an order requiring such action. Units that are supporting another unit remain under the control of the headquarters providing the support.

surg surgical

T1 Immediate Treatment Group (nuclear casualty)—those patients requiring immediate lifesaving surgery. Procedures should not be time-consuming and concern only those with a high chance of survival, such as respiratory obstruction or accessible hemorrhage.

T2 Delayed Treatment Group (nuclear casualty)—those patients requiring surgery, but whose conditions permit delay without unduly endangering safety. Life-sustaining treatment such as intravenous fluids, antibiotics, splinting, catheterization, and relief of pain may be required in this group. Examples are fracture-d limbs and uncomplicated burns.

T3 Minimal Treatment Group (nuclear casualty)—those patients with relatively minor injuries, such as minor fractures or lacerations, who can be helped by untrained personnel or who can look after themselves. Buddy care is particularly important in this category.

T4 Expectant Treatment Group (nuclear casualty)—those patient with serious or multiple injuries Requiring intensive treatment, or with a poor chance of survival. These patients receive supportive treatment compatible with resources, which includes large doses of analgesics, as applicable. Examples or severe head and spinal injuries, widespread burns, or high doses of radiation; this is a temporary category.

TAMMIS Theater Army Medical Management Information System

task organization is a temporary grouping of forces designed to accomplish a particular mission. Task organization involves the allocation or distribution of available forces to a subordinate headquarters by placing these forces either attached, under operational control to, or in direct support of the subordinate headquarters. Staff planners must distinguish between that support and augmentation which is provided to any or all the division(s), and additional support or augmentation which may be required by the heavy or light division when conducting heavy-light operations. (*See also* augmentation.)

TB MED Technical Bulletin (Medical)

TBSA total body surface area

TC training circular

TC-AIMS Transportation Coordinators' Automated Information for Movement System

TF task force

TIM toxic industrial material

TM technical manual; team

TMIP Theater Medical Information Program

TO theater of operations

TOC tactical operations center

TOE table(s) of organization and equipment

TPA therapeutic pharmaceutical agent

triage The medical sorting of patients according to the type and seriousness of injury, likelihood of survival, and the establishment of priority for treatment and/or evacuation. Triage ensures that medical resources are used to provide care for the greatest benefit to the largest number. The categories are: minimal—those who require limited treatment and can be returned to duty; immediate—patients requiring immediate care to save life or limb; delayed—patients who, after emergency medical treatment, incur little additional risk by delay or further treatment; and expectant—patients who are so critically injured that only complicated and prolonged treatment will improve life expectancy. (For triage categories for nuclear casualties, refer to T1, T2, T3, and T4.)

trl trailer

trmt treatment

TSOP tactical standing operating procedure

TX treatment

UCMJ Uniformed Code of Military Justice

ULLS Unit Level Logistics System

unit trains Combat service support personnel and equipment organic to or attached to a force that provides supply, evacuation, and maintenance services. Unit trains, whether or not echeloned, are under unit control and no portion of them is released to the control of a higher headquarters. Trains are normally echeloned into combat and field trains. (*See also* combat trains; field trains.)

UO urbanized operations

US United States

USAF United States Air Force

USAMMA US Army Medical Materiel Agency

UTI urinary tract infection

VA Department of Veterans Affairs

veh vehicle

VHF very high frequency

VRC vehicular radio communications

VS both adult and pediatric; vital signs

WIA wounded in action

WIN Warfighter Information Network

WMD weapons of mass destruction

XO executive officer

REFERENCES

SOURCES USED

These are the sources quoted or paraphrased in this publication.

NATO STANAGs

These agreements are available on request (using DD Form 1425) from the Standardization Documents Order Desk, 700 Robins Avenue, Building 4, Section D, Philadelphia, Pennsylvania 19111-5094.

2087. *Medical Employment of Air Transport in the Forward Area*. *Edition 5*. 9 September 1997. (Latest Amendment, 10 September 1999.)
2132. *Documentation Relative to Medical Evacuation, Treatment, and Cause of Death of Patients*. *Edition 2*. 7 August 1974. (Latest Amendment, 15 September 1986.)
2454. *Regulations and Procedures for Road Movements and Identification of Movement Control and Traffic Control Personnel and Agencies*. *Edition 1*. 6 July 1998. (Latest Amendment, 17 October 2000.)
2931. *Orders for the Camouflage of the Red Cross and Red Crescent on Land in Tactical Operations*. *Edition 2*. 19 January 1998. (Latest Amendment, 3 April 1998.)
3204. *Aeromedical Evacuation*. *Edition 6*. 15 July 1999. (Latest Amendment, 4 October 2000.)

ABCA QSTAGs

These agreements are available on request (using DD Form 1425) from the Standardization Documents Order Desk, 700 Robins Avenue, Building 4, Section D, Philadelphia, Pennsylvania 19111-5094.

470. *Documentation Relative to Medical Evacuation, Treatment, and Cause of Death of Patients*. *Edition 1*. 23 February 1979. (Latest Amendment, 14 August 1989.)
529. *Medical Employment of Air Transport in the Forward Area*. *Edition 1*. 24 March 1980. (Latest Amendment, 14 August 1989.)

AIR STDs

These agreements are available on request (using DD Form 1425) from the Standardization Documents Order Desk, 700 Robins Avenue, Building 4, Section D, Philadelphia, Pennsylvania 19111-5094.

44/36A. *Aeromedical Evacuation by Helicopter*. 2 October 1978.
61/71. *Selection, Priorities, and Classes of Conditions for Aeromedical Evacuation*. 10 May 1989.

Joint or Multiservice Publications

Joint Publication 4-02.1. *Joint Tactics, Techniques, and Procedures for Health Service Logistics Support in Joint Operations*. 6 October 1997.

AR 40-562. *Immunizations and Chemoprophylaxis*. AFJI 48-110; BUMEDINST 6230.15; CG COMDTINST M6230.4E. 1 November 1995.
FM 3-3. *Chemical and Biological Contamination Avoidance*. FMFM 11-17. 16 November 1992. (Change 1, 29 September 1994.)
FM 3-4. *NBC Protection*. FMFM 11-9. 29 May 1992. (Reprinted with basic including Changes 1—2, 21 February 1996.)
FM 3-100. *Chemical Operations Principles and Fundamentals*. MCWP 3-3.7.1. 8 May 1996.
FM 4-02.33. *Control of Communicable Diseases Manual (17th Edition)*. NAVMED P-5038. 31 December 1999.
FM 8-9. *NATO Handbook on the Medical Aspects of NBC Defensive Operations AMedP-6(B), Part I–Nuclear, Part II–Biological, Part III–Chemical*. NAVMED P-5059; AFJMAN 44-151V1V2V3. 1 February 1996.
FM 8-284. *Treatment of Biological Warfare Agent Casualties*. NAVMED P-5042; AFMAN(I) 44-156; MCRP 4-11.1C. 17 July 2000.
FM 8-285. *Treatment of Chemical Agent Casualties and Conventional Military Chemical Injuries*. NAVMED P-5041; AFJMAN 44-149; FMFM 11-11. 22 December 1995.
FM 11-1. *Talk II-SINCGARS Multiservice Communications Procedures for the Single-Channel Ground and Airborne Radio System*. MCRP 6-2.2.2; NDC TACMEMO 3-13.1; ACCPAM 33-154; PACAFPAM 33-154; USAFEPAM 33-154. 29 May 1996.
FM 90-3. *Desert Operations*. FMFM 7-27. 24 August 1993.
FM 100-19. *Domestic Support Operations*. FMFM 7-10. 1 July 1993.
FM 101-5-1. *Operational Terms and Graphics*. MCRP 5-2A. 30 September 1997.
TB Med 81. *Cold Injury*. NAVMED P-5052-29; AFP 161-11. 30 September 1976.
TB Med 507. *Occupational and Environmental Health Prevention, Treatment and Control of Heat Injury*. NAVMED P-5052-5; AFP 160-1. 25 July 1980.
TM 5-632. *Military Entomology Operations Handbook*. NAVPAC MO-310; AFM 9-16. 1 December 1971. (Reprinted with basic including Changes 1—2, 2 January 1976.)
TM 8-227-12. *Armed Services Blood Program Joint Blood Program Handbook*. NAVMED P-6530; AFH 44-152. 21 January 1998.
DODD 6490.1. *Mental Health Evaluations of Members of the Armed Forces*. 1 October 1997.
DODD 6490.2. *Joint Medical Surveillance*. 30 August 1997.
DODD 6490.5. *Combat Stress Control Programs*. 23 February 1999.
DODI 1400.32. *DOD Civilian Work Force Contingency and Emergency Planning Guidelines and Procedures*. 24 April 1995.
DODI 3020.37. *Continuation of Essential DOD Contractor Services During Crises*. 6 November 1990.
DODI 6490.3. *Implementation and Application of Joint Medical Surveillance for Deployments*. 7 August 1997.

Army Publications

AR 40-3. *Medical, Dental, and Veterinary Care*. 30 July 1999.
AR 40-5. *Preventive Medicine*. 15 October 1990.
AR 40-61. *Medical Logistics Policies and Procedures*. 25 January 1995.
AR 40-66. *Medical Record Administration and Health Care Documentation*. 3 May 1999.

AR 40-400. *Patient Administration*. 12 March 2001.
AR 40-501. *Standards of Medical Fitness*. 30 August 1995. (Reprinted with basic including Change 1, 27 February 1998.)
AR 71-32. *Force Development and Documentation—Consolidated Policies*. 3 March 1997.
AR 220-10. *Preparation for Oversea Movement of Units (POM)*. 15 June 1973.
AR 335-15. *Management Information Control System*. 15 December 1982. (Reprinted with basic including Change 1, 28 October 1986.)
AR 750-1. *Army Materiel Maintenance Policy and Retail Maintenance Operations*. 1 August 1994. (Change 1, 1 July 1996.)
FM 3-0. *Operations*. 14 June 2001.
FM 3-97.6. *Mountain Operations*. 28 November 2000.
FM 4-02.1. *Combat Health Logistics*. 28 September 2001.
FM 4-02.4. *Medical Platoon Leaders' Handbook—Tactics, Techniques, and Procedures*. 24 August 2001.
FM 4-02.10. *Theater Hospitalization*. 29 December 2000.
FM 4-02.17. *Preventive Medicine Services*. 28 August 2000.
FM 4-02.19. *Dental Service Support in a Theater of Operations*. 1 March 2001.
FM 4-02.21. *Division and Brigade Surgeons' Handbook (Digitized)—Tactics, Techniques, and Procedures*. 15 November 2000.
FM 4-02.24. *Area Support Medical Battalion—Tactics Techniques, and Procedures*. 28 August 2000.
FM 7-30. *The Infantry Brigade*. 3 October 1995. (Change 1, 31 October 2000.)
FM 8-10. *Health Service Support in the Theater of Operations*. 1 March 1991.
FM 8-10-3. *Division Medical Operations Center—Tactics, Techniques, and Procedures*. 12 November 1996.
FM 8-10-6. *Medical Evacuation in a Theater of Operations—Tactics, Techniques, and Procedures*. 14 April 2000.
FM 8-10-7. *Health Service Support in a Nuclear, Biological, and Chemical Environment*. 22 April 1993. (Reprinted with basic including Change 1, 26 November 1996.)
FM 8-10-8. *Medical Intelligence in a Theater of Operations*. 7 July 1989.
FM 8-10-9. *Combat Health Logistics in a Theater of Operations—Tactics, Techniques and Procedures*. 3 October 1995.
FM 8-10-14. *Employment of the Combat Support Hospital—Tactics, Techniques, and Procedures*. 29 December 1994.
FM 8-10-15. *Employment of the Field and General Hospitals—Tactics, Techniques, and Procedures*. 26 March 1997.
FM 8-10-16. *Army Medical Information Operations*. 3 September 1998.
FM 8-10-18. *Veterinary Service—Tactics, Techniques, and Procedures*. 22 August 1997.
FM 8-10-25. *Employment of Forward Surgical Teams—Tactics, Techniques, and Procedures*. 30 September 1997.
FM 8-10-26. *Employment of the Medical Company (Air Ambulance)*. 16 February 1999. (Change 1, 20 May 2002.)
FM 8-42. *Combat Health Support in Stability Operations and Support Operations*. 27 October 1997.
FM 8-43. *Combat Health Support for Army Special Operations Forces*. 21 June 2000.
FM 8-50. *Prevention and Medical Management of Laser Injuries*. 8 August 1990.
FM 8-51. *Combat Stress Control in a Theater of Operations—Tactics, Techniques, and Procedures*. 29 September 1994.

FM 8-55. *Planning for Health Service Support*. 9 September 1994.
FM 8-250. *Preventive Medicine Specialist*. 27 January 1986. (Reprinted with basic including Change 1, 12 September 1986.)
FM 8-500. *Hazardous Materials Injuries: A Manual for Pre-Hospital Care*. *Edition 4*. 17 January 1997.
FM 11-32. *Combat Net Radio Operations*. 15 October 1990.
FM 11-50. *Combat Communications within the Division (heavy and light*). 4 April 1991.
FM 11-55. *Mobile Subscriber Equipment Operations*. 22 June 1999.
FM 12-6. *Personnel Doctrine*. 9 September 1994.
FM 17-95. *Cavalry Operations*. 24 December 1996.
FM 19-4. *Military Police Battlefield Circulation Control, Area Security, and Enemy Prisoner of War Operations*. 7 May 1993.
FM 21-10. *Field Hygiene and Sanitation*. 21 June 2000.
FM 21-10-1. *Unit Field Sanitation Team*. 11 October 1989.
FM 22-51. *Leader's Manual for Combat Stress Control*. 29 September 1994.
FM 24-19. *Radio Operator's Handbook*. 24 May 1991.
FM 27-10. *The Law of Land Warfare*. 18 July 1956. (Reprinted with basic including Change 1, 15 July 1976.)
FM 31-70. *Basic Cold Weather Manual*. 12 April 1968. (Reprinted with basic including Change 1, 17 December 1968.)
FM 31-71. *Northern Operations*. 21 June 1971.
FM 63-1. *Support Battalions and Squadrons, Separate Brigades, and Armored Cavalry Regiments*. 30 September 1993. (Reprinted with basic including Change 1, 20 September 1994.)
FM 63-2. *Division Support Command, Armored, Infantry, and Mechanized Infantry Divisions*. 20 May 1991.
FM 63-2-1. *Division Support Command—Light Infantry, Airborne, and Air Assault Divisions*. 16 November 1992. (Reprinted with basic including Change 1, 20 September 1994.)
FM 71-100. *Division Operations*. 28 August 1996.
FM 71-100-2. *Infantry Division Operations—Tactics, Techniques, and Procedures*. 31 August 1993.
FM 71-100-3. *Air Assault Division Operations—Tactics, Techniques, and Procedures*. 29 October 1996.
FM 71-123. *Tactics and Techniques for Combined Arms Heavy Forces: Armored Brigade, Battalion/ Task Force, and Company/Team*. 30 September 1992.
FM 90-5. *Jungle Operations*. 16 August 1982.
FM 90-10. *Military Operations on Urbanized Terrain*. 15 August 1979.
FM 90-26. *Airborne Operations*. 18 December 1990.
FM 100-8. *The Army in Multinational Operations*. 24 November 1997.
FM 100-10. *Combat Service Support*. 3 October 1995.
FM 100-17. *Mobilization, Deployment, Redeployment, and Demobilization*. 28 October 1992.
FM 100-17-5. *Redeployment*. 29 September 1999.
FM 100-23. *Peace Operations*. 30 December 1994.
FM 100-25. *Doctrine for Army Special Operations Forces*. 1 August 1999.
FM 101-5. *Staff Organization and Operations*. 31 May 1997.
FM 101-5-2. *US Army Report and Message Formats*. 29 June 1999.

TB Med 530. *Occupational and Environmental Health: Food Service Sanitation*. 28 November 1991.
TB Med 577. *Occupational and Environmental Health: Sanitary Control and Surveillance of Field Water Supplies*. 7 March 1982.
CMH Pub 20-5. *The Medics' War*. April 1986.

DOCUMENTS NEEDED

These documents must be available to the intended users of this publication.

Department of the Army Forms

DA Form 1155. *Witness Statement on Individual*. 1 June 1966.
DA Form 1156. *Casualty Feeder Report*. 1 June 1966.
DA Form 1594. *Daily Staff Journal or Duty Officer's Log*. 1 November 1962.
DA Form 1934. *Grid Azimuths (T and T) and (T-T) Correction from UTM Grid Coordinates*. February 1957.
DA Form 2765-1. *Request for Issue or Turn-in*. April 1976.
DA Form 3444. *Terminal Digit File For Treatment Record (Orange)*. May 1991.
DA Form 8005. *Outpatient Medical Record (OMR) (Orange)*. November 1991.
DA Form 8007-R. *Individual Medical History (LRA)*. November 1996.

Department of Defense Forms

DD Form 1380. *US Field Medical Card*. December 1991.
DD Form 1934. *Geneva Conventions Identity Card for Medical and Religious Personnel Who Serve in or Accompany the Armed Forces*. July 1974.
DD Form 2697. *Report of Medical Assessment*. February 1995.
DD Form 2766. *Adult Preventive and Chronic Care Flowsheet*. March 1998.
DD Form 2766C. *Adult Preventive and Chronic Care Flowsheet (Continuation Sheet)*. March 1998.
DD Form 2795. *Pre-Deployment Health Assessment Questionnaire*. May 1999.
DD Form 2796. *Post-Deployment Health Assessment Questionnaire*. May 1999.

Standard Forms

SF Form 558. *Medical Record—Emergency Care and Treatment*. September 1996.
SF Form 600. *Health Record—Chronological Record of Medical Care*. June 1997.
SF Form 603. *Health Record—Dental*. October 1975.

READING RECOMMENDED

These readings contain relevant supplemental information.

Joint and Multiservice Publications

AR 40-562. *Immunizations and Chemoprophylaxis*. AFJI 48-110; BUMEDINST 6230.15; CG COMDTINST M6230-4. 1 November 1995.
AR 190-8. *Enemy Prisoners of War, Retained Personnel, Civilian Internees, and Other Detainees*. OPNAVINST 3461.6; AFJI 31-304; MCO 3461.1. 1 October 1997.
AR 600-8-14. *Identification Cards for Members of the Uniformed Services, their Family Members, and other Eligible Personnel*. AF 36-3026 (I); BUPERS I 1750.10A; MCO P5512.1B, CG M5512.1; Manual 29.2, Instructions 1 and 2. 1 March 1998. (Change 2, 29 July 1999.)
FM 3-4. *NBC Protection*. FMFM 11-9. 29 May 1992. (Reprinted with basic including Changes 1—2, 21 February 1996.)
FM 3-5. *NBC Decontamination*. MCWP 3-37.3. 28 July 2000.
FM 3-9. *Potential Military Chemical/Biological Agents and Compounds*. NAVFAC P-467; AFR 355-7. 12 December 1990.
FM 3-100. *Chemical Operations Principles and Fundamentals*. MCWP 3-3.7.1. 8 May 1996.
FM 4-02.283. *Treatment of Nuclear and Radiological Casualties*. NTRP 4-02.21; ARMAN 44-161(I); MCRP 4-11.1B. 20 December 2001.
FM 6-22.5. *Combat Stress*. MCRP 6-11C; NTTP 1-15M. 23 June 2000.
FM 100-23-1. *Multiservice Procedures for Humanitarian Assistance Operations*. FMFRP 7-16; NDC TACNOTE 3-07.6; ACCP 50-56; PACAFP 50-56; USAFEP 50-56. 31 October 1994.

Army Publications

AR 40-501. *Standards of Medical Fitness*. 30 August 1995. (Reprinted with basic including Change 1, 27 February 1998.)
FM 3-05.20. *Special Forces Operations*. 26 June 2001.
FM 3-97.6. *Mountain Operations*. 28 November 2000.
FM 4-02.1. *Combat Health Logistics*. 28 September 2001.
FM 55-30. *Army Motor Transport Units and Operations*. 27 June 1997.
FM 55-65. *Strategic Deployment*. 3 October 1995.
FM 71-100-2. *Infantry Division Operations—Tactics, Techniques, and Procedures*. 31 August 1993.
FM 71-100-3. *Air Assault Division Operations—Tactics, Techniques, and Procedures*. 29 October 1996.
FM 100-14. *Risk Management*. 23 April 1998.
FM 100-25. *Doctrine for Army Special Operations Forces*. 1 August 1999.
FM 100-30. *Nuclear Operations*. 29 October 1996.

INDEX

References are to paragraph numbers unless otherwise indicated.

advanced trauma management, 1-4*a*(4)(*b*), 1-8, 1-10*b*. *See also* field surgeon.
ambulance
air and ground direct support, 1-11*b*(1), F-14, F-18*b*
platoon, 3-4, 3-14, H-3*b*
headquarters, 3-4*a*
leader, 3-4*a*
sergeant, 3-4
squads, 1-8*b*(2), 3-4*b*
ammunitions, 3-9*c*(6), 3-13*f*
area
damage control, 3-10*b*
support
medical battalion, 1-4*a* and *b*(3), 1-17
medical company, 1-4*a*, 1-8*a*, 2-16
squad, 1-8*b*(4)—(5), 3-3*c*(2), F-14, Figure F-9, H-3*a*(2)(*b*)
elements, 3-3*c*
treatment
platoon, 3-3, F-10
squad, 3-3*b*, F-12—13
ATM. *See* advanced trauma management.
automation and digitization, I-9—11
area common user system, I-5, I-7*c*, I-9*b*. *See also* warfighter information network.
MC4 system, I-12
application, I-14
command and control, I-15
hardware, I-12*c*(2)
software, I-12*c*(1)
telecommunications, I-12*c*(3)
medical communications for combat casualty care system concept, page I-13

battalion
aid station, 4-8*b*(2)
area support, 2-16
blood
banking, 3-3*c*(2)(*b*)
management report, E-7, F-28
situation report, 3-2*d*(2), 3-3*a*
supply, E-6—7
support, 3-3*c*, 3-15*c*
brigade
Class VIII requisitioning, F-24
collecting point, A-2*c*
combat team, 2-4*b*(10) and *c*, 2-14, F-21
medical supply office, 2-10*a*

brigade *(continued)*
organic support battalion, 2-14*c*
separate infantry, 2-10*c*
support
battalion, 2-1, 2-15
medical company, 2-15, Appendix F
surgeon section, 4-8*a*(1)

camouflage, operational guidelines, 3-10*a*(1)
CHL. *See* combat health logistics.
Class VIII, Appendix D, F-24, F-27
digital request, F-24*b*
emergency request, F-24*c*
routine requisitions, F-24*a*
supply management in Force XXI divisions, D-1*a*
clearing station
ammunition, individual weapons, and sensitive military equipment, 3-13*f*
cots, 3-3*c*, F-10
establishment, 3-13
evacuation, 3-13*f*
layout, Figure 3-1
operations on urbanized terrain, Appendix J
clinical
guidelines
combat casualty care, Appendix L
psychologist, 3-6*b*, L-20
standing operating procedure, Appendix H
cold weather environment, 4-5
combat
casualty care clinical guidelines, Appendix L
health
logistics
blood management, 1-13, F-28
Class III resupply, 3-15*c*
Class VIII automation management, F-23
delivery of Class VIII supplies, F-27
health service materiel officer, F-22
overview, F-21, Figure F-15
support
in specific environments, Chapter 4
planning, 1-6, Appendix B
system, Chapter 1
operational stress control, 1-4, 1-10*b*, 1-17, 4-4*b*(5). *See also* mental health section.

communications
radios
amplitude modulated (AM), I-3
AN/GRC-213 (improved high-frequency), I-3*a*
AN/GRC-246, I-3*b*
AN/PSC-5 Spitfire, I-3*c*
ancillary equipment, I-4
combat net radio systems, I-7
frequency-modulated (FM), I-2
Single Channel Ground and Airborne Radio System, I-2*a*
AN/PRC-119, I-2*b*
AN/VRC-88F/87F, I-2*a* and *c*
AN/VRC-89F, I-2*a* and *d*
AN/VRC-90F, I-2*a* and *e*
wire nets, I-8
command frequency-modulated (FM), I-8*a*
high-frequency amplitude modulated (AM), I-8*b*
internal wire communication, I-8*f*
wire subscriber access, I-5*c*
company commander, 3-2*a*(1), F-4
COSC. *See* combat operational stress control.
CSOP. *See* clinical standing operating procedure.

dental
comprehensive care, 1-14*b*
element, 3-3*c*(2)(*a*), F-14*a*
officer, 3-3*c*(2), F-14, L-10
operational care, 1-4*b*(1), 1-14*a*, 2-4*b*(4), 2-6*b*(3), 3-3*c*
section, F-14
services, 1-6*b*, 1-10*b*, 1-14
specialist (91E), 1-8*b*(4), 3-3*c*(2), L-11
desert environment, 4-4
acclimatization ,4-4*b*(1)
discipline, 4-4*b*(2)
water, basic need, 4-4*b*(3)
wind; dust and sand, 4-4*b*(6)
division
air assault, 2-3*d*
airborne, 2-3*c*
armored and mechanized infantry, 2-3*a*
Force XXI, digitized, 2-3*a*(2)
light infantry, 2-3*b*
medium, 2-3*e*
overview, 2-2

echelon of medical care
Echelon I, 1-4*a*
Echelon II, 1-4*b*
Echelon III, 1-4*c*
Echelon IV, 1-4*d*
Echelon V, 1-4*e*
evacuation
platoon, F-17—18, F-20, Figures F-11—14
squads, F-19
executive officer. *See* field medical assistant.
expected areas of patient density, 3-9*c*(3)

field
medical assistant/executive officer, 3-2*a*(2), 3-3*a*, 3-12*a*
surgeon (62B MC), 3-3, L-2
forward
support medical
company, 2-5
evacuation team, F-1*c*
surgical team, 1-8*b*(6), 2-7*e*(1), 2-13*a*, 3-3*e*—*f*, F-1*c*, J-3, L-5
FST. *See* forward surgical team.

Geneva Conventions, Appendix A, G-5*b*(2)
compliance with, A-6
medical implications of, A-2

health
care specialist (91W), 3-3*b*, L-6—7
medical training, L-8
records, Appendix K
hospitalization in
CONUS, 1-12*c*
corps, 1-12*a*
theater (echelon above corps), 1-12*b*

interim brigade combat team, 2-15

Jungle environment, 4-2
combat operations, 4-2*b*
special planning considerations, 4-2*c*

laboratory specialist, medical (91K), 3-3*c*(2), L-15
landing zone (site), 3-9*c*(8)
law of war, A-1

logistics
blood management, 1-13, 3-2*d*
report, E-7
combat health, 3-2*d*, F-5*b*
elements, F-5
medical
equipment maintenance, F-5*c*
supply and maintenance element, 3-2*d*
unit supply, 3-2*c*, F-5*a*

MASCAL. *See* mass casualty.
mass casualty
operations, J-4
planning for, 1-6*d*, H-3*e*, J-4*a*
rehearsals and training, J-4*b*
situations, Appendix C
MC4. *See* Medical communications for combat casualty care.
medical
communications for combat casualty care, I-12—15, Figure I-7
company
area support, 2-16*a*, Figure 2-13
brigade support, 2-15*a*, F-1*a*, Figure F-1
division support, 2-6, Figure 2-7, 2-7*b*
employment of, 3-8, F-6
forward support, 2-4
air assault, 2-5*c*, Figure 2-3
airborne, 2-5*d*, Figure 2-4
digitized, 2-5*e*, Figure 2-5
heavy, 2-5*a*, Figure 2-1
light, 2-5*b*, Figure, 2-2
headquarters, 3-10
heavy separate brigade, 2-9, Figure 2-11
main support
air assault, 2-7*d*, Figure 2-9
airborne, 2-7*e*, Figure 2-10
heavy, 2-7*a*, Figure 2-6
light, 2-7*c*, Figure 2-8
site selection, 3-9
evacuation, 1-11*a*
laboratory
element, F-14*b*
specialist (91K), L-15
regulating, 1-11*b*
supply and medical maintenance element, 3-2*d*
surgical nurse (66H AN), 3-3*d*, L-4

medical *(continued)*
troop-armored cavalry regiment, 2-12, Figure 2-12
threat, 1-5
mental health section, 3-6, 3-17, F-9*a*, Figure F-4
clinical psychologist (73A67), L-20
combat operational stress control, 1-4, 1-10*b*, 1-17, 4-4*b*(5)
psychiatrist, L-18
specialist (91X), L-21
social worker (73A67), L-19
MH. *See* mental health section.
modular medical support system
ambulance squad, 1-8*b*(2)
area support squad, 1-8*b*(4)
combat medic (trauma specialist), 1-8*b*(1)
forward surgical team, 1-8*b*(6)
general, 1-8*a*
patient holding squad, 1-8*b*(5)
treatment squad, 1-8*b*(3)
mountain environment, 4-3
increase in patient suffering, 4-3*e*
litter bearers, 4-3*b*
operations, 4-3*c*
survival training, 4-3*d*

NBC and directed-energy environments, 4-6

optometry section, 3-7*a*, 3-18
eye specialist (91WP3), 3-7, L-28
officer (67F00 MS), 3-7, L-27
optical laboratory specialist (91H), 3-7, L-31
operational dental care, 1-4*b*(1), 1-14*a*, 2-4*b*(4), 2-6*b*(3), 3-3*c*

patient holding squad, 3-3*d*, F-15, H-3*a*(*c*)
physician assistant (65D SP), 1-4*a*(4)(*b*), 3-3*a*, F-2*c*, L-3
physician. *See* field surgeon.
planning, combat health support, Appendix B
platoon
evacuation, F-17—18, F-20, Figures F-11 and F-13—14
leader, 3-4
treatment, 3-3*a*, 3-12*a*, F-10, F-16
preventive medicine
environmental science officer (72D67 MS), L-25
field sanitation team, 1-16*b*
functions, 3-5*d*, F-7*b*
officer (60C00 MC), L-24

preventive medicine *(continued)*
section, 3-5, 3-16, F-7—8, Figure F-3
employment of, 3-16
services, 1-16
specialist (91S), L-26
property exchange, 3-4*b*, F-26
psychiatrist (60W), 3-6*b*, L-18
PVNTMED. *See* preventive medicine.

radios. *See* communications.
radiology
element, 3-3*c*(2)(*c*), F-14*c*
specialist, 1-8*b*(4), 3-3*c*(2), F-14, L-13—14
rehearsals and training, C-2*b*, J-4*b*

security, G-5*d*—*e*
semiannual combat medic skills validation test, L-9
site selection, medical company, 3-9, G-5*f*(1)
commander's plan and mission, 3-9*c*(1)
decontamination area, 3-9*c*(12)
equipment, 3-9*c*(11)
expected areas of patient density, 3-9*c*(3)
flow of traffic (patients and vehicles), 3-9*c*(10)
Geneva Conventions adherence, 3-9*c*(13)
hardstand, drainage, obstacles, and space, 3-9*c*(4)
perimeter security, 3-9*c*(9)

tactical standing operating procedure, Appendix G
annexes, G-5
format, G-3
general, G-1
purpose, G-2
sections, G-4
training, Chapter 4
clinical laboratory specialist, L-17
dental specialist, L-12
eye specialist, L-29—30
health care specialist, L-7
medical, L-8
mental health specialist, L-22—23
radiology specialist, L-14
treatment
medical,1-10*a*
platoon, 3-3, 3-12, F-10, F-16, H-3*a*
headquarters, 3-3*a*, F-11
squad, 3-3*b*—*c*, F-12

TSOP. *See* tactical standing operating procedure.

unit supply, 3-2*c*, F-5*a*

van, expansible, 2-5*a*(3), 2-7*b*(2)

warfighter information network, I-8*f*, I-9*a*
Water, 4-2c, 4-4, 4-5*d*

FM 4-02.6 (FM 8-10-1)
1 AUGUST 2002

By Order of the Secretary of the Army:

ERIC K. SHINSEKI
General, United States Army
Chief of Staff

Official:

JOEL B. HUDSON
Administrative Assistant to the
Secretary of the Army
0217709

DISTRIBUTION:

Active Army, Army National Guard, and US Army Reserve: To be distributed in accordance with the initial distribution number 110816, requirements for FM 4-02.6.

PIN: 080070-000