FM 3-7

NBC Field Handbook

Headquarters, Department of the Army

DISTRIBUTION RESTRICTION: Distribution is authorized to US government agencies only to protect technical or operational information, as well as unclassified, controlled, nuclear information (UCN) material from automatic dissemination under the International Exchange Program or by other means. This determination was made 29 November 1993. Other requests for this document will be referred to Commandant, US Army Chemical School, ATTN: ATZN-CM-FNB, Fort McClellan, AL 36205-5020.

DESTRUCTION NOTICE: Destroy by any method that will prevent disclosure of contents or reconstruction of he document.

FIELD MANUAL
NO. 3-7

HEADQUARTERS
DEPARTMENT OF THE ARMY
Washington, DC, 29 September 1994

NBC Field Handbook

Preface ... ii
Chapter 1 NBC Warning and Reporting System ... 1-1
Chapter 2 Chemical ... 2-1
Chapter 3 Protection and Decontamination ... 3-1
Chapter 4 Nuclear Protection ... 4-0
Chapter 5 Biological Protection ... 5-0
Chapter 6 Smoke ... 6-1
Chapter 7 Flame Field Expedients ... 7-1
Appendix A Combat Orders ... A-0
Appendix B NBC Defense Equipment and Training Aids ... B-1
Appendix C NBC Signs ... C-1
Appendix D Tactical Operations ... D-1
Appendix E Conversions and Measurements ... E-0
References ... References-1
Glossary ... Glossary-1
Index ... Index-1

DISTRIBUTION RESTRICTION: Approved for public release; distribution is unlimited.

* This publication supersedes FM 3-7, 27 September 1990.

PREFACE

This manual, FM 3-7, is designed as a guide to help the chemical soldier at battalion level and below in NBC defense. It details the NBC warning and reporting system, and how to locate, identify, and operate in and around NBC contamination. This manual is designed to bean easy-to-read, step-by-step manual depicting the manual method of calculating NBC defense procedures useful for the field soldier. A more detailed discussion of NBC defensive measures may be found in:
FM 3-3, Chemical and Biological Contamination Avoidance
FM 3-3-1, Nuclear Contamination Avoidance
FM 3-4, NBC Protection
FM 3-4-1, Fixed Site Protection
FM 3-5, NBC Decontamination
FM 3-11, Flame Field Expedients

Chemical soldiers must be familiar with and be able to apply the information in this manual.

Although this manual does not implement any particular international agreement, material presented herein complies with related international agreements. A list of related international agreements and other references can be found in the references section.

Unless otherwise stated, whenever the masculine gender is used, both men and women are included.

The proponent for this manual is HQ, TRADOC. Submit changes for improving this publication on DA Form 2028 (Recommended Changes to Publications and Blank Forms) and forward it to:

Commandant
U.S. Army Chemical School
ATTN: ATZN-CM-FNB
Fort McClellan, AL 36205-5020.

CHAPTER 1

NBC Warning and Reporting System

The NBCWRS consists of standard NBC Reports and Strike Warnings. This system is broken down into the following areas:

- NBC threat status
- NBC warning and reporting system (NBCWRS)
- Friendly strike warnings
- NBC weather and wind messages

NBC Threat Status (STANAG 2984)

a. Serial O (none).

The opposing force does not possess any NBC defense equipment, is not trained in NBC defense or employment, and does not possess the capability to employ NBC warfare agents or systems.

b. Serial 1 (low).

The opposing force has an offensive NBC capability, has received training in defense and employment techniques, but there is no indication of the use of NBC weapons in the immediate future.

c. Serial 2 (medium).

The opposing force is equipped and trained in NBC defense and employment techniques. NBC weapons and employment systems are readily available. NBC weapons may have been employed in other areas of the theater.

Employment of NBC weapons is considered probable. Indicators would be:

- NBC munitions deployed to field storage sites.
- Enemy troops wearing or carrying protective equipment.
- NBC reccon elements observed with conventional recon units.
- NBC decon elements moved forward.

d. Serial 3 (high).

The opposing force possesses NBC warfare agents and delivery systems. NBC defense equipment is available and training status is considered at par or better than that of the United States. NBC weapons have already been employed in the theater and attack is considered probable in the immediate future. Indicators are:

- NBC attack in progress but not in area of operation.
- NBC warnings/signals to enemy troops.

- NBC munitions delivered to firing units within range of friendly forces.
- Movement of surface-to-surface missiles to a launch site.

The threat status can be used for any size or type unit. It is possible to have a CB (chemical-biological) status of three and a nuclear status of zero.

Vulnerability Analysis

To assist field commanders in developing the NBC threat status, refer to tables 1-1, 1-2, and 1-3.

For more detailed discussion of chemical agents, see FM 3-3, Chapter 1 or FM 3-4, Chapter 3.

Table 1-1. CB threat status matrix.

Condition	Serial Number			
	0	1	2	3
Enemy force information: • Training status • NBC equipment availability • Wearing overgarments • In collective protection shelters, in positions with overhead cover, or exposed?				
CB weapon systems: • Availability of CB weapons • CB weapons moved to firing units or launch sites? • Weather radars queued? • Decon/recon assets forward?				
Enemy CB policy and capabilities: • What is enemy's stated policy on CB weapons employment? • Can enemy produce CB agents? • Has industrial output increased or changed for production of CB munitions or protective equipment?				
Current Situation: • have CB weapons been used in theater? • Is weather favorable for CB attack? • Is terrain favorable for CB attack?				
Totals (circle current status)				

Use Xs to mark applicable boxes or degree of threat. Total number of Xs in each column, and use serial number with largest number as current threat status.

Table 1-2. Nuclear threat status matrix.				
Condition	Serial Number			
	0	1	2	3
Enemy force information: • Training status • NBC equipment availability • In collective protection shelters, in positions with overhead cover, or exposed				
Nuclear weapons systems: • Availability of nuclear weapons • Nuclear weapons moved forward to firing units or launch sites? • Weather radars queued? • Decon/recon assets forward?				
Enemy nuclear policy and capabilities: • What is enemy's stated policy on nuclear weapons employment? • Can enemy produce nuclear weapons? • Has industrial output increased or changed for production of nuclear munitions or protective equipment				
Current situation: • Have nuclear weapons been used in theater? • Is weather favorable for nuclear attack? • Is terrain favorable for nuclear attack?				
Totals (circle current status)				
Use Xs to mark applicable boxes or degree of threat. Total columns and use serial number with largest number as current threat status.				

Table 1-3. Casualty estimate for initial chemical hazards.

Type Munition	Target Radii (Meters)	Percent Casualties *			
		Nonpersistent		Persistent	
		Nerve	Blood	Nerve	Blister
Bursting	150	40	10	25	10
	500	30	5	20	5
	1,000	15	2	15	2
Spray	150			45	10
	500			30	5
	1,000			20	2

*Troops in MOPP1 or MOPP2. For troops in MOPP4, reduce casualty percentages to a negligible level.

Table 1-4. Chemical agent persistency in hours on chemical agent resistant coated painted surfaces.

Temperature		Agents				
C°	F°	GA/GF[1]	GB2, 3	GD2, 3	HD1	VX 2, 3
-30	-22	*	110.34	436.69	**	***
-20	-4	*	45.26	145.63	**	***
-10	14	*	20.09	54.11	**	***
0	32	*	9.44	22.07	**	***
10	50	1.42	4.70	9.78	12	1776
20	68	0.71	2.45	4.64	6.33	634
30	86	0.33	1.35	2.36	2.8	241
40	104	0.25	0.76	1.25	2	102
50	122	0.25	0.44	0.70	1	44
55	131	0.25	0.34	0.51	1	25

NOTES:
1 For grassy terrain, multiply the number in the chart by 0.4.
2 For grassy terrain, multiply the number in the chart by 1.75.
3 For sandy terrain, multiply the number in the chart by 4.5.
* Agent persistency time is more than 1.42.
** Agent is in a frozen state and will not evaporate or decay.
*** Agent persistency time exceeds 2,000 hours.

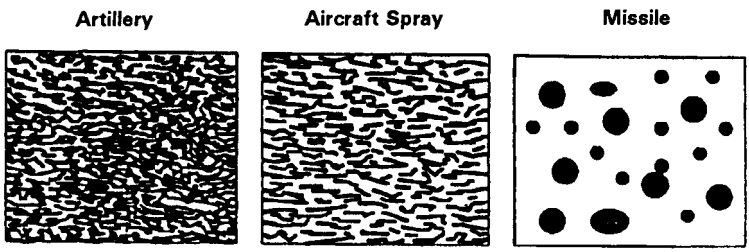

Figure 1-1. Heavy liquid contamination on M9 paper.

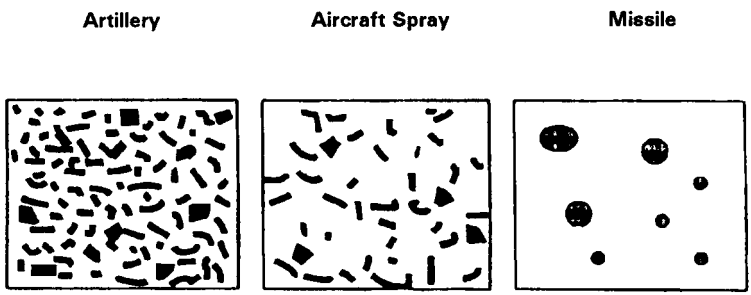

Figure 1-2. Moderate liquid contamination on M9 paper (1 gram/square meter).

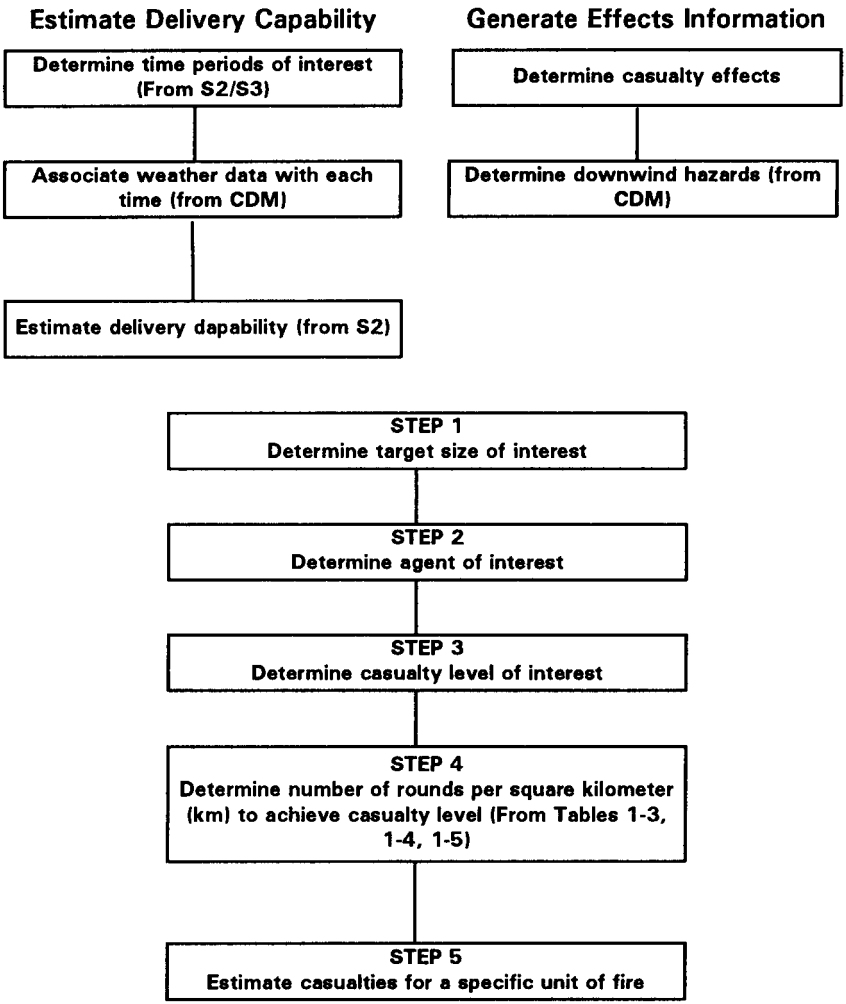

Figure 1-3. Chemical Vulnerability and Assessment and Force Protection

Table 1-5. GB nerve agent casualties.						
Rounds per 100m or .1 km			Temperature °F			
BM-21/.1 km^2	152mm/.1 km^2	122mm/.1 km^2	10	32	50	68
1	2	4	10%	16%	24%	33%
2	4	7	14%	22%	30%	40%
3	6	10	19%	27%	37%	47%
4	8	14	25%	34%	43%	54%
5	10	17	31%	40%	50%	60%
			Casualty Percentage			

Table 1-6. TGD or VX nerve agent casualties.							
Rounds				Temperature °F			
Msl/ 10km^2	Msl/ 1.5km^2	Bombs/ 10km^2	Bombs/ 1.5 km^2	10	32	50	68
6	1	26	4	5%	14%	20%	21%
9	2	40	6	8%	18%	25%	25%
12	2	54	8	12%	24%	31%	31%
15	2	68	10	16%	28%	36%	36%
18	3	80	12	19%	32%	40%	41%
21	3	94	14	21%	35%	42%	43%
24	3	106	16	23%	37%	44%	45%
				Casualty Percentage			

Table 1-7. THD blister agent casualties.			
Munitions in Rounds		Protective Posture	
152 mm/100m^2	122 mm/100m^2	MOPP Zero	MOPP 1
4	7	17%	13%
7	14	24%	18%
11	20	34%	23%
14	27	43%	28%
18	33	51%	32%
21	40	57%	36%
		Casualty Percentage	

Flow of NBC Reports

NBC reports 1 through 6 move between units and higher headquarters as shown in Figure 1-4.

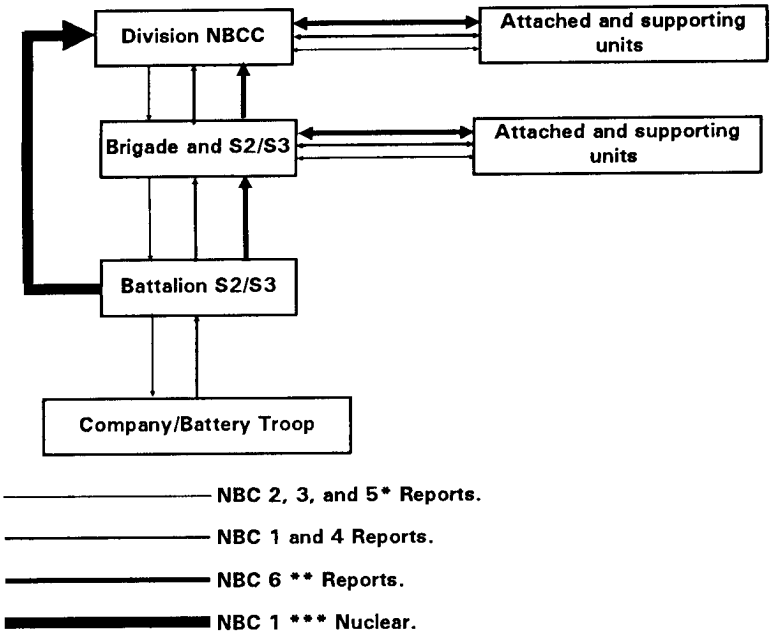

* Best sent as an overlay.

** Sent only when requested.

*** For nuclear attacks, only designated observer units will submit reports to division NBCCs (NBC centers). All other units will be prepared to send the information, if requested.

Figure 1-4. Flow of NBC Reports.

LINE	NUCLEAR	CHEMICAL & BIOLOGICAL	REMARKS
A	Strike serial number	Strike serial number	Assigned by NBC center
B	Position of observer	Position of observer	Use grid coordinates (UTM or place).
C	Direction of attack from observer to include unit of measure	Direction of attack from observer	Nuclear: Deg magnetic north (DMN) or mills (MMN). Deg true north (DTN) or mils (MTN). Deg grid north (DGN) or mils (MGN). Chemical: Direction measured clockwise from grid north or magnetic north (state which) in degrees or mils (state which).
D	Date-time group of detonation	DTG os start of attack	Nuclear: Use Zulu time. Chemical: Designate time zone used.
E	N/A	DTG of end of attack	Designate time zone used.
F	Location of area attacked	Location of area attacked	Use grid coordinates (or place). State whether location is actual or estimated.
G	Suspected or observed event and means of delivery or kind of attack	Kind of attack	State whether attack was by artillery, mortars, rockets, missiles, bombs, or spray.
H	Type of burst	Type of agent/type of burst; P (persistent), NP (nonpersistent)	Nuclear: Specify air, surface, or subsurface. Chemical: State whether air, ground, or spray attack.

Figure 1-5. Meaning of line items in NBC reports.

LINE	NUCLEAR	CHEMICAL & BIOLOGICAL	REMARKS
I	N/A	Number of munitions or aircraft	If known
J	Flash-to-bang time	N/A	Use seconds
K	Crater present or absent and diameter	Description of terrain and vegetation	Nuclear: Send in meters Chemical: Send in NBC 6
L	Cloud width at H + 5 minutes	N/A	State whether measured in degrees or mils
M	Stabilized cloud top or cloud bottom angle or cloud top or bottom height at H + 10 min	N/A	Nuclear: State whether angle is cloud top or cloud bottom and whether measured in degrees or mils. Chemical: State whether height is cloud top or cloud bottom and whether measured in meters or feet.
N	Estimated yield	N/A	Send as KT
O	Reference date-time for estimated contour line when not H + 1	N/A	Use when contours are not plotted at H+1.
P	Radar purposes only	N/A	
PA	N/A	Predicted hazard area (coordinates)	If wind speed is 10 kmph or less, this item is 010 (the radius of the hazard area in kilometers).
PAR	Coordinates of external contours of radioactive cloud	N/A	Six-digit coordinates. Letter R identifies RADAR set.

Figure 1-5. Meaning of line items in NBC reports (Continued).

LINE	NUCLEAR	CHEMICAL & BIOLOGICAL	REMARKS
PB	N/A	Duration of hazard in the attack and hazard area	In days, hours, minutes, etcetera.
PBR	Downwind direction of radioactive cloud and unit of measure	N/A	Deg magnetic north (DGM) or mils (MLM). Deg true north (DGT) or mils (MLT). Deg grid north (DGG) or mils (MLG). Letter R identifies RADAR set.
Q	Location of reading	Location of sampling and type of sample	Nuclear: UTM or place. Chemical: UTM or place. State whether test was air or liquid.
R	Dose rate or actual value of decay exponent	N/A	State dose rate in cGyph. See sample NBC4 for terms associated with this line.
S	Date-time group of reading	Date-time group contamination detected	State time initial identification test sample or reading was taken.
T	H + 1 date-time group	Date-time group of latest contamination survey of the area	NBC 5 and NBC 6 reports only.
U	1,000-cGyph contour line	N/A	Plot in red.
V	300-cGyph contour line	N/A	Plot in green.
W	100-cGyph contour line	N/A	Plot in blue.

Figure 1-5. Meaning of line items in NBC reports (Continued).

LINE	NUCLEAR	CHEMICAL & BIOLOGICAL	REMARKS
X	20-cGyph contour line; (30-cGyph contour line is used by other NATO forces)	Area of actual contamination	Nuclear: Plot in black. Chemical: Plot in yellow.
Y	Direction of left and right radial lines	Downwind direction of hazard and wind speed	Nuclear: Direction measured clockwise from GN to the left and then right rradial lines (degrees or mils, state which), 4 digits each. Chemical: Direction: 4 digits (degrees or mils). Wind speed: 3 digits (kmph).
Z	Effective wind speed Downwind distance of Zone I Cloud radius (Include unit of measure for each category)	N/A	3 digits—effective wind speed (kmph). 3 digits—Downwind distance of zone 1 (km or nautical miles) 2 digits—cloud radius (km or nautical miles). If wind speed is less than 8 kmph, this line contains only 3-digit radius of zone 1 (km).
ZA	N/A	Significant weather phenomena	Air stability (2 digits). Temperature in centigrade (2 digits). Humidity (1 digit). Significant weather phenomena (1 digit). Cloud cover (1 digit).
ZB	Used to transmit correlation factors or transmission factors	Remarks	Include any additional information.

Figure 1-5. Meaning of line items in NBC reports (Continued).

NBC 1 Observers' Initial Report.

This report is used by the observing unit to give basic initial and follow-up data about an NBC attack. It is sent by platoons and companies to battalion headquarters. Battalion and higher elements must consolidate reports and decide which NBC 1 to forward. The NBC 1 report following the first use of NBC weapons is sent with a FLASH precedence. Subsequent reports are sent with a precedence of IMMEDIATE. Only observers specifically designated by the division NBC center send NBC 1 (nuclear) reports.

Line	Nuclear	Biological (suspected)	Chemical
B	NB062634	LB206300	LB200300
C	90 deg Grid		
D	201405Z Mar 93	200410Z Mar 93	201405Z Mar 93
E		200414Z Mar 93	201412Z Mar 93
F		LB206300 Act	LB200300 Est
G	Artillery	Aerial spray	Bomblets
H	Surface	Unknown	Nerve, P, ground
J	60 Sec		
K			
L	15 Deg		
M			

NOTES: 1. Line items B, D, H, and either C or F should always be reported; other line items may be used if the information is known. Transmit line item MIKE (nuclear) only when data for line item LIMA cannot be obtained.

2. Biological attacks are considered to be "suspected" until confirmed by laboratory analysis.

Figure 1-6. NBC 1 Report.

NBC 2 Evaluated Data Report.

The NBC 2 report is based on two or more NBC 1 reports. It is used to pass evaluated data to units. Division is usually the lowest level to prepare an NBC 2 report. However, a brigade or battalion might do so, especially during independent operations.

Line	Nuclear	Biological (suspected)	Chemical
A	1ID024	B001	C002
D	201405Z Mar 93	200410Z Mar 93	201405Z Mar 93
F	NB107186 Est	LB206300 Act	LB200300 Act
G	Artillery	Aerial spray	Bomblets
H	Surface	Unknown	Nerve, P, ground
N	50		
Y		0270 015	0270 015
ZA		518640	518640

NOTES: 1. This report is normally based on two or more NBC 1 reports. It includes an attack location and, in the case of a nuclear detonation, an evaluated yield.
2. Refer to the chemical downwind message to determine cloud cover, significant weather phenomena, and air stability.
3. Line ZULA ALPHA contains the 6-digit code from the CDM.
4. *Use other line items if information is known.*

Figure 1-7. NBC 2 Report.

NBC 3 Warning of Predicted Contamination Report.
The NBCC uses NBC 1 reports and wind information to predict downwind hazard areas. This is disseminated as an NBC 3 report. Each unit evaluates the NBC 3 report, determines which of its subordinate units may be affected, and disseminates the report as required. This report warns commanders when they may be within a downwind hazard area so they may take protective measures.

NBC 4 Reconnaissance, Monitoring and Survey Report.
When a unit detects NBC hazards through monitoring, survey, or reconnaissance, this information is reported as an NBC 4 report. Reports from various units are plotted on the NBCC situation map to show where hazards exist. These reports are prepared and submitted by company-level organizations.

NBC 5 Actual Contaminated Areas Report.
Once the NBC 4 reports are posted on the situation map, an NBC 5 report is prepared showing the contaminated area. NBC 5 reports usually are prepared by division. The preferred method of dissemination is by map overlay.

NBC 6 Detailed Information on Chemical/Biological Attack Report.
This report, summarizing information concerning a chemical or biological attack, is prepared at battalion. It is submitted to higher headquarters only when requested. If desired, it can be sent from higher to lower for information purposes.

STRIKWARN (Friendly Nuclear Strike)

Line	Nuclear	Chemical
A	1ID024	C002
D	201405Z Mar 93	201405Z Mar 93
F	NB107186 Est	LB200300 Act
H	Surface	Nerve, P, ground
N	50	
PA		
		LB190300
		LB200312
		LB200300
PB		In attack area 2-4 days.
		In warning area 1-2 days.
Y	02720312 deg	0270 deg, 015 kmph
Z	01902505	
ZB		

NOTES:
1. If the effective wind speed is less than 8 kmph, line ZULU of the NBC 3 nuclear report consists of three digits for the radius of Zone I.
2. If the wind speed is less than 10 kmph, line PAPA ALFA of the NBC 3 chemical report is 010 (the radius of the hazard area km).
3. NBC 3 nuclear is used for passing immediate warning of predicted radiological contamination from friendly bursts.
4. Use other line items if information is known.

Figure 1-8. NBC 3 Report.

Line	Nuclear	Biological	Chemical
H	NB123987	Unknown Agent	Nerve, P
Q	35	NB211603	LB200300, liquid
R	201535Z Mar 93	201605Z Mar 93	01430Z Mar 93
S			

NOTES:
1. Line items HOTEL, QUEBEC, ROMEO, and SIERRA may be repeated as often as necessary.
2. Radiation dose rates are measured in the open with the instrument 1 meter above the ground.
3. In line ROMEO, descriptive words such as "initial," "peak," "special," "series," "verification," "contact," or "summary" may be added.
4. If readings are taken inside a vehicle or shelter, also give the correlation factor with line item ZULU BRAVO.

Figure 1-9. NBC 4 Report.

Line	Nuclear	Chemical
A	1ID024	C002
D	201405Z Mar 93	201405Z Mar 93
H	Surface	Nerve, P, ground
S	201535Z Mar 93	201430Z Mar 93
T	201505Z Mar 93	201500Z Mar 93
U		
V	NB105690	
	NB108685	
	NB105680	
W	NB104694	
	NB111685	
	NB093683	
X	NB103698	LB200300
	NB114686	LB191291
	NB091680	LB190300

NOTES:
1. This report is best sent as an overlay if time and the tactical situation permit.
2. When contamination arises from a single burst, the dose rate always refers to H + 1 hour, and the line item TANGO is used. When several detonations at different times or on different days and no single H + 1 hour is possible, then dose rates are reported as at a specified time, using line item OSCAR. Therefore, line items OSCAR and TANGO cannot both be used in the same report.
3. Contour lines are to be annotated with dose rates.

Figure 1-10. NBC 5 Report

Line	Multiple	Single
A	Hot Candle	AC002
D	162025Z—162155Z	072220Z—072310Z
F1		011 NB706101
F2		025
F3	PA490650	042
	PA511671	
	PA531174	
	PA527650	
	PA575650	
H	Surface 3	
I	22	

NOTE: If the burst has less than a 99% chance of being an airburst, an NBC 3 nuclear report should be prepared for separate transmission.

Figure 1-12. STRIKWARN message.

Line	Chemical or Biological
A	C002
D	201405Z Mar 93
E	201412E Mar 93
F	LB200300, Act
G	Bomblets
H	Nerve, P, Airburst
I	Unknown
K	Mostly small houses and barns, elevation 600 meters
M	Attack received as counterfire, from aircraft, enemy bypassed on right flank of atttack area.
Q	Liquid ground sample taken by detection team in attack area
S	201430Z Mar 93
T	201500Z Mar 93
X	As per overlay
Y	Downwind direction 0270 degrees, wind speed 015 kmph.
ZB	This is the second chemical attack in our area to date.

NOTES:
1. This report is designed to be presented at battalion level and above and is to be submitted only when requested.
2. This report is completed by battalion and higher NBC personnel. It is in narrative form, giving as much detailed information as possible for each line item.
3. This report is also suitable for accompanying samples sent for analysis.

Figure 1-11. NBC 6 Report.

Line Item	Meaning
A	Target number of "nickname:
*D	a. Multiple burst. Date-time attack (pulse) will start, followed by date-time attack (pulse) will end (ZULU time). b. Single burst: Date-time of attack followed by date-time after which attack will be cancelled (ZULU time).
*F1	a. Multiple. UTM grid coordinatesof MSD 1 box. b. Single. MSD in hundreds of meters followed by UTM grid coordinates of GZ or DGZ. (If more than one MSD is included, GZ or DGZ will be included only in the first FOXTROT line sent).
F2	a. Multiple. UTM grid coordinates of MSD 2 box. b. Single: MSD2 in hundreds of meters (followed by UTM grid coordinates of GZ or DGZ, if only one FOXTROT sent).
F3	a. Multiple. UTM grid coordinates of MSD 3 box. b. Single. MSD 3 in hundreds of meters (followed by UTM grid coordinates of GZ or DGZ if only one FOXTROT sent).
H	If one or more bursts has less than 99% assurance of being an airburst, or if it is a scheduled surface or subsurface burst, indicate "surface," preceded by the total number of surface and/or subsurface bursts. If only one burst is surface, number need not be sent. If all bursts are airbursts, do not transmit.
I	Number of bursts in multiple attack. If single burst, do not transmit.

* Line should be encoded.

Cancellation occurs when:
1. Authenticated message consisting of Line ALPHA and word "cancelled".
2. Single burst detonates. Multiple burst window ends.
3. After strike window ends.

Figure 1-13. STRIKWARN format.

Radius	Corresponding to	Zone	Requirements
< MSD[1]	Limit of negligible risk to warned and protected personnel (see note 5)	1	Evacuate all personnel (see note 4).
> MSD[1] < MSD[2]	Limit of negligible risk to warned and exposed personnel.	2	Maximum protection (see note 6) to remain.
> MSD[1] < MSD[2]	Limit of negligible risk to unwarned and exposed risk.	3	Minimum protection (see note 7) to remain.
More than MSD[3]			No protection measures except against dazzle and pulse EMP.

NOTE 1. MSD means minimum safe distance.
NOTE 2. When surface bursts are used, or an intended airburst has less than a 99% assurarnce of no militarily significant fallout, the fallout hazard will be considered. Details will be transmitted in a subsequent NBC 3 nuclear report if fallout will be a hazard to friendly units.
NOTE 3. Commanders will be guided to safety criteria as stated in FM 101-31-1.
NOTE 4. If a unit commander is unable to evacuate Zone I, he will immediately assume the best protection possible and report through his next higher headquarters to the releasing/executing commander.
NOTE 5. Negligible risk should not normally be exceeded unless significant advantages will be gained.
NOTE 6. Maximum protection for ground forces denotes that personnel are in "closed up" tanks or sheltered in foxholes with overhead shielding, or the equivalent.
NOTE 7. Minimum protection for ground forces denotes that personnel are prone on open ground with all skin areas covered and with an overall thermal protection at least equal to that provided by a two-layer uniform.
NOTE 8. Since the least separation distance (LSD) for light aircraft is exceeded by MSD 3, *aircraft remaining beyond MSD 3 will avoid significant degrdation of the* airframe or pilot performance (exxcept against dazzle)severe enough to prevent mission accomplishment.

Figure 1-14. Protection requirements for friendly nuclear strike.

NBC WEATHER AND WIND MESSAGES

Effective Downwind Message (EDM)

ZULU	DDTTTT	Date-Time Group Winds Were Measured (ZULU)
ALFA	dddsss---	Over 0 thru 2 KT
BRAVO	dddsss---	Over 2 thru 5 KT
CHARLIE	dddsss---	Over 5 thru 30 KT
DELTA	dddsss---	Over 30 thru 100 KT
ECHO	dddsss---	Over 100 thru 300 KT
FOXTROT	dddsss---	Over 300 thru 1 MT
GOLF	dddsss---	Over 1 thru 3 MT

1. The first three digits (ddd) give the effective wind direction, in degrees, from grid north.

2. The second three digits (sss) give the effective wind speed in kilometers per hour.

3. The last three digits (---) give the expanded angle in degrees (in NATO use 7th digit as follows:

4 = 40 degree angle	0 = 100 degree angle
5 = 50 degree angle	1 = 110 degree angle
6 = 60 degree angle	2 = 120 degree angle
7 = 70 degree angle	3 = more than 120 degree angle
8 = 80 degree angle	
9 = 90 degree angle	

4. If wind speed is less than 8 kmph, the preselected yield group line will contain only the 3-digit radius of Zone I.

Each EDM is valid for 12 hours. It is used in conjunction with the NBC 2 Nuclear Report to form a simplified fallout prediction (discussed in Chapter 2).

Chemical Downwind Message

1. Each chemical downwind message (CDM) is valid for only 6 hours.

2. The area affected may be a map sheet number or an area, such as I Corps.

110500 ZULU 110600 ZULU

I Corps

WHISKEY MIKE 120010418742
XRAY MIKE 125019416742
YANKEE MIKE 130005518642

WHISKEY: 120 010 4 18 7 4 2

Downwind direction in degrees

Windspeed in kmph

Air stability code
1 = very unstable (U)
2 = unstable (U)
3 = slightly unstable (U)
4 = neutral (N)
5 = slightly stable (S)
6 = stable (S)
7 = very stable (S)

Temperature code

Code	Temp
05	5°C
04	4°C
03	3°C
02	2°C
01	1°C
00	0°C
51	−1°C
52	−2°C
53	−3°C
54	−4°C
55	−5°C

Humidity code
0 = 0 - 9%
1 = 10 - 19%
2 = 20 - 29%
3 = 30 - 39%
4 = 40 - 49%
5 = 50 - 59%
6 = 60 - 69%
7 = 70 - 79%
8 = 80 - 89%
9 = 90 - 100%

Cloud cover code
0 = Sky less than half covered by clouds
1 = Half the sky covered by clouds
2 = More than half the sky covered by clouds

Significant weather phenomena code
3 = Blowing snow or sand
4 = Fog, ice fog, or thick haze
5 = Drizzle
6 = Rain
7 = Light rain or snow
8 = Showers of rain, snow, hail or a mixture
9 = Thunderstorm
S = Elevated Inversion Layer

* NOTE: Unknown weather data is represented by a dash (-).

Figure 1-15. How to read weather information in a chemical downwind message.

3. Lines WHISKEY MIKE, XRAY MIKE, and YANKEE MIKE each contain coded weather information. Line WHISKEY MIKE is valid for only the first 2 hours; line XRAY MIKE for the next 2 hours; and line YANKEE MIKE for the last 2 hours of the six covered.

Strike Serial Number (A)	Date/Time of Attack (ZULU) (D)	GZ Coordinates (Act/Est) (F)	Kind of Attck (G)	Type of Agent (H)	Remarks
C001	200945Z	LB200300 Est	Artillery	Nerve (NP) Air	

Figure 1-16. Suggested format for a chemical/biological strike serial log

CHAPTER 2

Chemical

Atmospheric Stability Charts

Temperature Gradients

Inversion Temperature Gradient (Stable-S). This condition usually exists on a clear or partially clear night when middle and low clouds cover less than 30 percent of the sky, and on early mornings until about 1 hour after sunrise when the wind speed is less than 5 kmph--ideal for enemy employment of chemical agents.

Neutral Temperature Gradient (Neutral-N). This condition usually exists on heavily overcast days or nights at 1 or 2 hours before sunset or 1 to 2 hours after sunrise when the middle and low clouds cover more than 30 percent of the sky. Independent of cloud cover and time of day, a neutral condition may also exist when the wind speed is greater than 5 kmph. Additionally, periods of precipitation are normally accompanied by a neutral condition. A neutral temperature gradient is most favorable for enemy use of biological agents.

Lapse Temperature Gradient (Unstable-U). This condition normally exists on a clear day when the middle and low clouds cover less than 30 percent of the sky and when the wind speed is less than 5 kmph. It is the least favorable condition for the enemy to employ chemical or biological agents. When a lapse condition exists, area coverage without diffusion will be enhanced with a steady low wind speed of 3 to 7 kmph.

To obtain the air stability category, refer to Table 2-1. Enter Table 2-2 with the category obtained from Table 2-1. Select the appropriate weather and terrain conditions from Table 2-2. Read across to where the columns intersect and extract the final stability category. For more information on field expedient behavior of chemical agents, see FM 3-6 or from CDM.

Table 2-1. Air stability category basic chart			
Air Stability Category Basic Chart			U = Unstable N = Neutral S = Stable
Time of day° and angle of sun	Condition of Sky		
	Less than half covered	More than half covered	Overcast
MORNING ≤ 4°	S	S	N
>4° ≤ 32°	N	N	N
>32° ≤ 40°	U	N	N
>40°	U	U	N
EVENING >46°	U	U	N
>35° 46°	U	N	N
>12° 35°	N	N	N
>5° 12°	S	N	N
≤ 5°	S	S	N
° At night, use 4°			

Table 2-3. Downwind distance of warning area			
Means of Delivery (from line G of the NBC 1 or NBC 2)	Distance (km) from the center of the attack area along the downwind axis, when the atability condition is—		
	U	N	S
Artillery, bomblets, and mortars	10	30	50
Multiple rocket launchers, missiles, bombs, and unknown munitions.	15	30	50

Table 2-2. Air stability category adjustment chart.			
Air Stability Category Adjustment Chart	**U = Unstable N = Neutral S = Stable**		
Weather and Terrain All eight conditions given below must be checked. If more than one applies, choose the most stable category.	**Stability Category from Basic Chart**		
	U	**N**	**S**
Dry to slightly moist surface.	U	N	S
Wet surface (after continuous rain or dew).	N	N	S
Frozen surface or partly covered with snow, frost, or permafrost.	N	S	S
Surface completely covered with snow.	S	S	S
Continuous rainfall.	N	N	N
Haze or mist (visibility 1 to 4 km).	N	N	S
Fog (visibility less than 1 km).	N	S	S
Downwind speed more than 18 kmph.	N	N	N

Once the proper stability condition is determined, use Table 2-3 to compute the downwind distance for Type A attacks.

Plotting Chemical Agent Hazards

Classification of chemical agents:

- **Persistent**
- **Nonpersistent**
- **Dusty**

Table 2-4. Threat chemical agents.

Types of agent	Symbol	Symptoms in man	Effects on man	Rate of Action	How normally disseminated	Protection required	Decon	Means of identification
Nerve	GA GB GB VX	Difficulty breathing, sweating, drooling, neusea, vomiting, convulsions, and dimming of vision	Incapacitates atlow concentration; kills if inhaled or absorbed through the skin or eyes	Very rapid by inhlation, slower through skin Delayed through skin; rapid through eyes	Aerosol or vapor	Protective mask and protective clothing	STB slurry; household bleach; 10% solution of lye or washing soda; DS2; steam and ammonia in confined area; hot, soapy water; M258-series kit; M291 kit	M256, M18A2, CAM, M8/M9 paper, M8A1 alarm
Blood	AC CK	Rapid breathing, convulsions, and coma	Kills if high concentrations are inhaled	Rapid	Aerosol or vapor	Protective mask	None needed in field.	M256, M18A2
Blister	HD HN HL L CX	No early sumptons. Searing of eyes and stinging of skin Powerful irritation of eyes, nose, and skin	Blisters skin and respiratory tract; can cause temporary blindness. Some agents sting and form welts on the skin.	Blisters delayed hours to days; eye effects more rapid. Mustard lewisite, aand phosgene oxime very rapid	Liquid or droplets	Protective mask and protective clothing	STB; DS2; household bleach; M258-series kit; Try lye; fire. Wash with soap and water.	M256, M18A2, CAM, M8/M9 paper

Chemical Hazard Plotting Steps

Air-Contaminating Agents--Type A

Type A agents normally are dispersed as aerosols or vapor clouds with little or no contamination on the ground.

Ground-Contaminating Agents–Type B

Type B agents normally are expected to be dispersed in liquid form to contaminate surfaces.

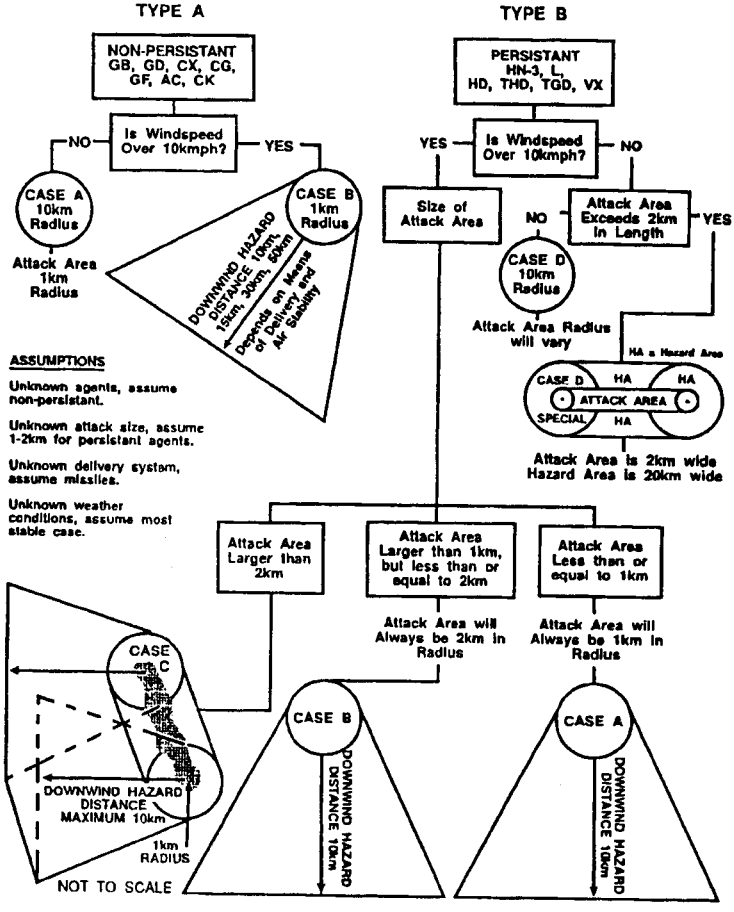

Figure 2-1. Flow chart.Chemical Hazard Prediction

Chemical Hazard Prediction
Ground Burst Non-Persistent Agent

Type "A" Attacks

Windspeed ≤ 10 KMPH

Type "A"
Case "a"
DWHD
10 km Radius Circle

Windspeed > 10 KMPH

Type "A"
Case "b"
DWHD

Line G

Seventh Digit From CDM

Means of Delivery	DWHD from Center of Attack Area		
	U	N	S
Artillery Bomblets Mortars	10 km	30 km	50 km
MRL'S Missiles, Bombs and Unknown	15 km	30 km	50 km

Figure 2-2. Flow chart, type A attack.

Plotting Downwind Hazard

Step 4

Example (Type A, Case a)
NBC 3 Chemical Report

Step 3

Step 1 - Attack location
Step 2 - 1km Attack area circle
Step 3 - 10km hazard area circle

Figure 2-3. Type A, Case a.

STEP 7

Example (Type A, Case b) NBC 3 Chemical Report

A	002
D	2716472
F	LB580750 Actual
H	Nerve, NP, Ground Burst
*PA	LB556751
	LB559754
	LB632774
	LB610694
	LB558747
Y	0105 Deg, 022kmph
ZA	218242
ZB	Type A Case B

* Coordinate points of line PA.

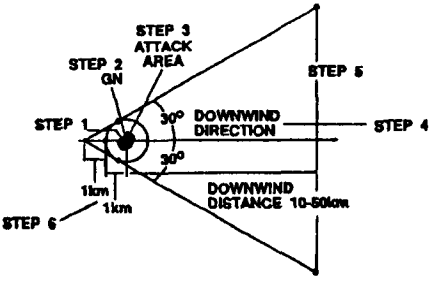

Step 1 - Attack location
Step 2 - Grid north line
Step 3 - 1km attack area circle
Step 4 - Downwind direction and speed
Step 5 - Downwind distance
Step 6 - Extended upwind intersection point
Step 7 - Tangent lines

Figure 2-4. Type A, Case b.

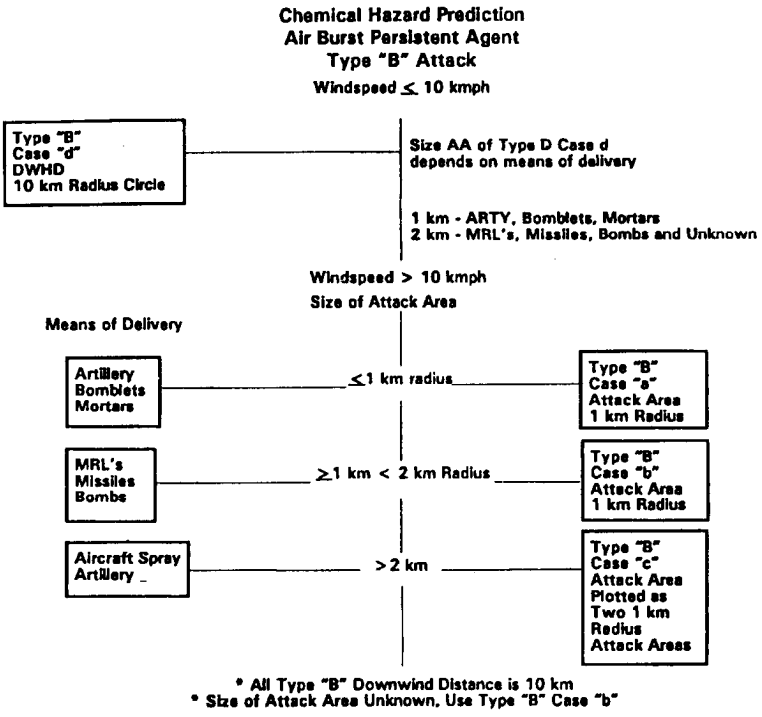

Probable Time After Ground Contamination Which Personnel May Safely Remove Mask (Line Papa Bravo)		
Daily Mean Surface Air Temperature	Within Attack Area Number of Days	Within Hazard Area Number of Days
<0 - 10° C (32 -50° F) 11 - 20° C (51 -68° F) 21 - >30° C (69 - 86° F)	3 - 10 Days 2 - 4 Days Up to 2 Days	2 - 6 Days 1 - 2 Days Up to 1 Day

Figure 2-5. Flow chart, type B attack.

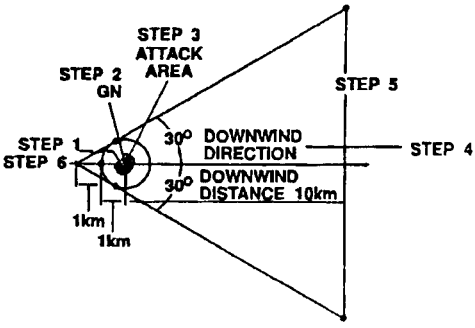

STEP 7

Example (Type B Case a) NBC 3
Chemical Report

A 002
D 271472
F LB560750 Actual
H Nerve, NP, Ground Burst
PA LB556751
LB559754
LB632774
LB610694
LB558747
Y 0105 Deg, 022 kmph
ZA 218242
ZB Type B Case A
• Coordinate points of line PA.

Plot the same as type A, Case b
Maximum downwind distance is 10km

Figure 2-6. Type B, Case a.

STEP 6

Example (Type B Case b) NBC 3
Chemical Report

A 002
D 271472
F LB560750 Actual
H Nerve, PER, Ground Burst
PA LB556751
LB559754
LB632774
LB106694
LB558747
Y 0105 Deg, 022 kmph
ZA 218242
ZB Type B Case b
• Coordinate Points For Lines PA

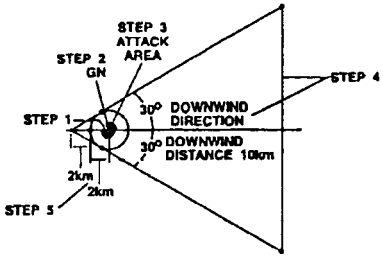

Step 1. Attack location
Step 2. Grid north line
Step 3. 2km circle
Step 4. Downwind direction and distance
Step 5. Extended upwind intersection point
Step 6. Tangent lines

Figure 2-7. Type B, Case b.

STEP 6

Example (Type B, Case c)
NBC 3 Chemical Report

A 007
D 141550Z
F UC310060 to
UC370061 est
H Nerve, V, Spray
PA UC313068
UC303068
UC298059
UC305938
UC365939
UC481014
PB Attack Area 2-4 Days
Hazard Area 1-2 Days
Y 0147 Degrees,
012 kmph
ZA 216662
ZB • Coordinate Points For
Line PA

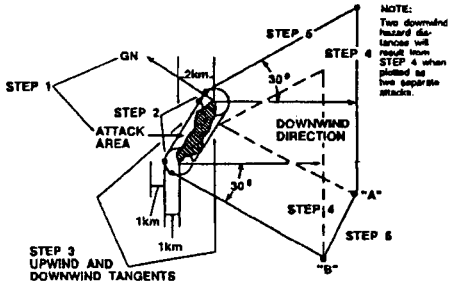

Step 1. Attack area
Step 2. 1km circles
Step 3. Downwind direction lines
Step 4. Downwind distance
Step 5. Tangent lines

Figure 2-8. Type B, Case c.

Example (Type B, Case d) NBC 3 Chemical report

A 005
D 220730Z
F LB212295 est
H Nerve, V, Airburst
PA 010 km
Y 0105 Deg, 008 kmph
ZA 219452
ZB Radius of Attack Area 1 km, Type B Case d

NOTE: Attack area radius depends on means of delivery.

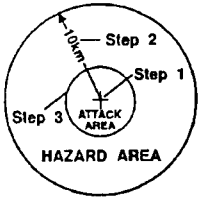

Step 1. Attack location
Step 2. 10km circle
Step 3. Attack area circle

Figure 2-9. Type B, Case d.

Example (Type B, Case d) (special).
A 005
D 220730Z
F LB212295 to LB242295 Actual
H Nerve, Persistent, Spray
PA 010 km
PB AA 2-4 days, HA 1-2 days
Y 0105 deg, 008 kmph
ZA 219452
ZB Type B, Case d (special)

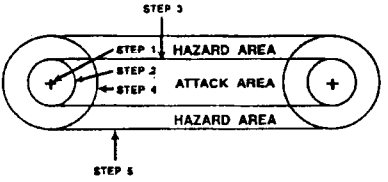

NOTE: Figure above is not to scale.

Step 1. Attack area (Start/end points)
Step 2. Start/end point 1 km circles
Step 3. Attack area
Step 4. Start/end point 10km circles
Step 5. Hazard area

Figure 2-10. Type B, Case d (Special).

Adjusted Hazard Prediction

Adjust hazard predictions when:

- Windspeed change of 10 kmph or more
- Wind speed increases from less than 10 kmph to more than 10kmph or the reverse.
- Change of air stability category (Type A attacks only)
- Downwind direction change of 30° or more.

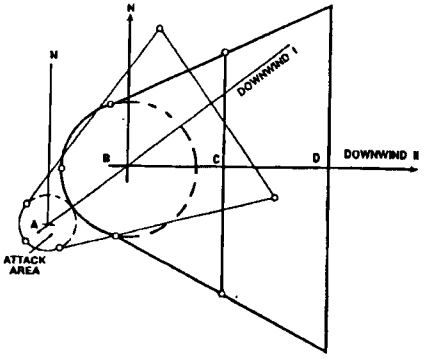

Figure 2-11. Recalculation of downwind hazard area, Type A attack, after change in downwind direction at Point B.

Persistency of Chemical Agents

Table 2-5 shows persistency of chemical agents for moderate contamination. As a rule of thumb, cooler conditions increase the persistency of chemical agents. Persistency triples as contamination levels increase from moderate to heavy. Chemical agent persistency data in Table 2-5 is for surface winds of 10 kmph and considers weathering only (without decon). For other surfaces use the following multiplication factors for the times given: alkyd paint = 1.3, bare soil = 4.0. Agent HL is not shown. To approximate HL, use GD persistency times. Concentrations of contamination are considered to be heavy at (10 grams per square meter. One week is considered to be 168 hours. One month (30 days) is equal to 720 hours.

Table 2-5. Chemical Agent Persistency in Hours on CARC Painted Surfaces

Temperature		GA/GF[1]	GB[2,3]	GD[2,3]	HD[1]	VX[2,3]
C°	F°					
-30	-22	*	110.34	436.69	**	***
-20	-4	*	45.26	145.63	**	***
-10	14	*	20.09	54.11	**	***
0	32	*	9.44	22.07	**	***
10	50	1.42	4.70	9.78	12	1776
20	68	0.71	2.45	4.64	6.33	634
30	86	0.33	1.35	2.36	2.8	241
40	104	0.25	0.76	1.25	2	102
50	122	0.25	0.44	0.70	1	44
55	131	0.25	0.34	0.51	1	25

[1] For grassy terrain multiply the number in the chart by 0.4
[2] For grassy terrain multiply the number in the chart by 1.75
[3] For Sandy terrain multiply the number in the chart by 4.5
*Agent persistency time is greater than 1.42
** Agent is in a frozen state and will not evaporate or decay
*** Agent persistency time exceeds 2,000 hours

Time of Arrival for Chemical Hazards

The earliest an agent can be expected to arrive at a location is determined by dividing the distance from the attack center by twice the wind speed. For example, if you are 10 kilometers from the attack center and the wind speed is 5 kilometers per hour, the earliest the agent cloud would arrive at your location would be one hour.

10 km ÷ (2 x 5 kmph) = 1 hour

Collective Protection

Table 2-6 Types of collective-protection systems for vehicles and fixed facilities.

System	Description	conditions Justifying the Requirement	Example Systems
Ventilated-faceplate	Series of individual respiratory systems (or masks) serviced by a common filter.	• Clean working area subject to inadvertent entry of contamination. • High work rate, reduced breathing resistence. • Frequent entry and exit movements. • Brief inside occupation.	• Infantry fighting vehicles. • Self-propelled howitzers.
Overpressure	A collective NBC filter and overpressure system inside a vehicle or shelter	• Critical manual dexterity skills. • Limited entry and exit movements. • Lengthy inside occupation.	• Air defense. • Communications. • Medical. • Patient evaluation vehicles. • Maintenance and supply sites. • Rest and relief.
Hybrid	Combination of overpressure and ventilated-facepiece system.	• Flexibility. • Lenghty inside occupation. • Emergency entry and exit movements.	• Armored fighting vehicles (tanks). • Helicopters. • Air defense. • Multiple launcher rocket system.
Total	Hybrid or overpressure plus an environmental control system. Other categories may also incorporate environmental control; for example, ventilated facepiece and microclimatic cooling.	• Same as hybrid. • Extreme climates.	• Same as hybrid.

Table 2-7. GPFU fielded systems.	
Number of GPFUs/System	System
1	M60 Tank
1	M60A1 Tank
1	M60A2 Tank
1	M60A3 Tank
1	M728 Combat Engineer vehicle
1	M1 Tank
1	M1A1 Tank

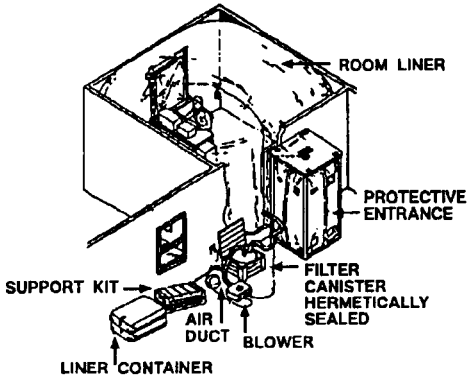

Figure 2-8. Simplified collective-protection equipment.

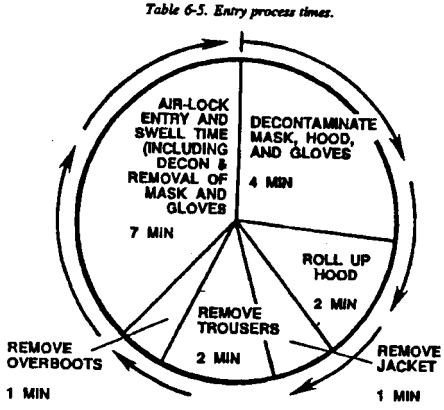

Figure 2-12. Entry process times.

Table 2-13. Modular CPE examples of application.

System	Set-Up[1]		Tear-Down	
	Personnel in MOPP4	Time (min)	Personnel in MOPP4	Time (min)
Simplified Collective-Protection Equipment M20	2	30[2]	2	10[3]
Modular Collective-Protection Equipment	2	10[4]	2	5
M51 Shelter	5	30[5]	5	30

[1] Only set-up time and not fully operational time.
[2] Does not include time to seal a room when the liner is not used.
[3] Based on disposing of the room liner in place.
[4] Protective entrance only.
[5] Site-prep and stake-down times not included.

Table 2-14. Collective-protection MOPP levels.

Soldiers Not in Collective Protection			Soldiers in Collective Protection	
MOPP Level	**MOPP Gear**		**Ventilated Facepiece**	**Overpressure**
Zero	Overgarment Overboots Mask & Hood Gloves	carried carried carried carried	•Assume MOPP zero.	•Assume MOPP zero. •Overpressure off.
1	Overgarment Overboots Mask & Hood Gloves	worn carried carried carried	•Assume MOPP 1.	•Assume MOPP zero or MOPP 1. •Overpressure on.
2	Overgarment Overboots Mask & Hood Gloves	worn worn carried carried	•Assume MOPP2.	•maintain MOPP zero or MOPP1. •Overpressure on. •Entry exit procedures not required.
3	Overgarment Overboots Mask & Hood Gloves	worn worn worn carried	•Assume MOPP3. •When mounted, connect ventilated facepiece to mask.	•Maintain MOPP zero or MOPP1 unless interior is contaminated. •Overpressure on. •Exit/entry precedures required if an attack occurs.
4	Overgarment Overboots Mask & Hood Gloves	worn worn worn worn	•Assume MOPP3 or MOPP4.* •When mounted, connect ventilated facepiece to mask.	•Maintain MOPP zero or MOPP1 unless interior is contaminated. •Overpressure on. •Entry/exit procedures required if an attack occurs.

* During an engagement, the commander may allow personnel protected from liquid agents to operate temporarily without protective gloves. This option could slightly increase the potential for casualties.

CHAPTER 3

Protection and Decontamination

Table 3-1. Mission-oriented protective posture (MOPP) levels.

MOPP Equipment	Mopp Levels				
	MOPP Zero	MOPP1	MOPP2	MOPP3	MOPP4
Mask	Carried	Carried	Carried	worn*	Worn
Overgarment	Available	Worn*	Worn*	worn*	Worn
Chemical Protective Undergarment	Carried	Worn**	worn**	Worn**	Worn**
Vinyl Overboot	Available	Available	Worn	Worn	Worn
Gloves	Available	Carried	Carried	Carried	Worn

*The jacket or hood can be left open for ventilation.
**The CPU is worn under the BDU (primarily applies to SOF, armor vehicle crewman, and aviators).
Modification of standard MOPP levels is authorized (for example, mask only or mask and gloves only).
Chemical protective helmet cover is put on helmet MOPP1 through MOPP4.

Individual Protective Equipment

The BDO/CPOG becomes unserviceable if it is ripped, tom, or a fastener is broken or missing; or if petroleum, oils, or lubricants are spilled or splashed on the garment. Chemical protective glove set, greenback vinyl overboot, and chemical protective footwear covers become unserviceable if ripped, tom, punctured, cracked, or if the rubber becomes sticky. Serviceability tests for the chemical protective gloves set. Fill each glove with air and submerge in water, checking for air leaks. Fill glove with water and check for water leaks. Any leaks make the glove unserviceable. NOTE: See FM 3-4, Chapter 2, for detailed information.

When the commander directs his unit to go from MOPP Zero to MOPP1, the chemical officer/NCO will determine BDO/CPOG days of wear. Upon completion of the mission, the unit returns to MOPP Zero, and overgarments are returned to their vapor-barrier bag. The chemical officer/NCO at company or battalion level estimate the number of days of BDO/CPOG wear for his unit. Then uses the information on days of overgarment wear as input for risk assessment.

Table 3-2. Minimum IPE protection capabilities.Item

Item	Not exposed to chemical agent	Exposed to chemical agent
Battledress overgarment	*30 days	24 hours
Chemical protective overgarment	*14 days	6 hours
14/25-mil glove set	**	24 hours
Green/black vinyl overboot	**	24 hours
Chemical protective footwear cover	**	24 hours
7-mil glove set	**	6 hours

* Times begin when item is removed from its sealed vapor bag, and stops when sealed back in its vapor-barrior bag.
** Will protect against liquid chemical agents and vapor hazard as long as they remain serviceable.
The key to effectiveness at any time during wear is serviceability.
Wear time may be extended by the commander when operationally necessary. See FM 3-4, Chapter 3, Chemical Vulnerability Assessment and force protection for detailed information.
Any operational hazards may have a degrading effect on protective capabilities (i.e., rivercrossings, moving through swampy/wet areas, heavy rain, excessive sweating by soldiers, POL spills while refueling, maneuver through areas where IPE is easily torn or ripped.

Table 3-3. BDO risk assessment.

Days of wear	Risk of injury
<30	Negligible
>30	(approx 5%-ID)
>45	(approx 10%-ID)
>60	(10%-ID)

Filter Exchange Criteria

Filter exchange criteria for all NBC falters in the inventory-from the mask filters to the filters on the simplified collective-protective equipment (SCPE)--are based on design, physical condition, climatic conditions, and the possible agent that could be employed. The following paragraphs discuss peacetime, transition-to-war, and wartime exchange criteria.

Peacetime

When assessing filter exchange criteria, consider several factors. Commanders and NBC personnel must monitor replacement schedules for pieces of NBC equipment with filters. Peacetime exchange criteria for all filters is based on the following conditions:

- Physical damage occurs.

- Immersion in water, or filters have become water logged by other means.
- High resistance to airflow is observed.
- Directed by higher headquarters.
- Listed as unserviceable in SB 3-30-2.

NOTE: When filters are listed as unserviceable in SB 3-30-2, they still can be used as training filters.

Transition to War

Leaders consider NBC issues when preparing for deployment. As part of that process, commanders will determine when their units should remove their training filters and replace them with filters from unit contingency stocks. The commander's guidance should be reflected in an SOP or order. Factors for consideration on whether to exchange filters include unit location, unit readiness/deployability alert

Table 3-4. Wartime Filter Exchange Criteria.

Climate Category					
Filter	Cold humid (weeks)	Warm moderate (weeks)	Hot dry (weeks)	Hot humid (weeks)	System
•C-2/M13A2	52	52	39	10	•M40/M17-series protective mask
•M10A1 canister	52	52	52	13	•M24/M25 protective mask
•M18 gas	52	39	26	4	•Filter comp of M13 tank GPFU
•M12A1 gas	52	39	26	4	•Fixed site filter use in structure and building
•M48 gas/particulate	52	52	39	10	•M1A1 task overpressure system
•MCPE gas/particulate	52	39	26	4	•Modular collective protection equipment
•HSFC gas/particulate	52	39	26	4	•*Simplified* protection equipment M20/M28
•M23 gas	52	39	26	4	•M51 *shelter*
•M10 gas	52	39	26	4	•fixed site filter
•C-22 R1 gas	52	52	52	13	•GPFU M46 fixed site filter

Climatic Definitions		
Category	Mean temp (F)	Mean relative humidity (%)
Cold, humid	<-15	<90
Warm, moderate	<60	<70
Hot, dry	<98	<27
Hot, humid	>96	>76

status, last time falters were exchanged, threat, time available, and stocks available. For example, a forward deployed unit commander, based on an enemy chemical capability in the area of operation, directs by SOP that his or her unit install its contingency set of filters. Alternatively, a CONUS-based unit commander determines that the basis for installing contingency falters would occur upon an increase in unit alert status for deployment to an area with an NBC threat.

Considerations commanders should use before initiating filter exchange include

- Mission—What is the unit mission?
- Enemy—What is the current threat assessment with respect to use of NBC weapons? Is our unit likely to encounter attack on arrival in the operational area?
- Terrain-Where should filters be exchanged: at home station, en route, or in the operational area?

Troop Preparation

Plan Ahead

- Check NBC defense guidance on OPLAN/OPORD; anticipate projected work requirements in the next 24-48 hours.
- Ensure serviceability or shortfalls of equipment through precombat inspections of NBC equipment.
- Know the most current weather data, particularly wind direction.
- Plan work/rest cycles appropriate to the environment and the mission.
- Ensure deployment and mounting of alarms.
- Use SOPs to reduce command, control, and communication tasks.
- Keep plans simple.

Think Teamwork

- Use methods of individual identification (name tags, personal items).
- Encourage “small-talk” while in MOPP.
- Pair an experienced soldier with an inexperienced “buddy” whenever possible.
- Use the buddy system to ensure that all members of the unit are regularly checked for signs of stress and agent exposure.

Work Smart

- Provide relief from MOPP4 as soon as the mission allows.
- Use world/rest ratios, slow work rate, and minimize work intensity.
- Work in the shade whenever possible.

- Enforce command drinking to reduce dehydration and heat casualties.

REMEMBER-the most motivated soldiers and leaders are the most likely to ignore their needs for food, water, and rest.

- Use collective protection as much as possible.
- Enforce good eating, drinking, and sleeping discipline.
- Rotate jobs and people during long shifts or periods of inactivity.
- Provide relief from extreme temperatures (hot or cold) as soon as possible.
- Remember that even short breaks from total encapsulation are effective in sustainment performance.
- Augment units or divide work between two units.
- Schedule work for a cooler time of day or at night.

MOPP Analysis

Use intelligence preparation of the battlefield (IPB) to determine—

- An estimate on how many enemy fire support systems are in range, where, and what they are.
- How to support probable enemy courses of action (COA).
- Enemy's intent and capabilities.
- Enemy tactical doctrine.
- An evaluation of arms of operation and times of interest set by the commander.
- Terrain and weather.
- Threat integration (how the enemy will fight).

Prior planning based on information provided by the chemical officer will help the commander make sound decisions. Regular updates need to be provided to the commander because of rapid changes in the situation.

Using IPB, provide the commander and staff:

- Detailed information on enemy NBC capability based on the type of weapon systems that the enemy has available at that period of interest.
- How the enemy would employ chemicals.
- Areas of likely employment based on threat employment doctrine.
- Detailed analysis of terrain and weather in the unit's AO during each period of interest.
- MOPP guidance for each period of interest.
- Templates of predicted fallout data that are updated as conditions change.
- Alternative actions the commander can initiate prior to the time period in question to minimize degradation of affected units.
- Continuous monitoring of S2 message and radio traffic for any NBC-related information that could be important to the unit's mission.

MOPP System Flexibility

Flexibility is the key to providing maximum protection with the lowest risk possible while still allowing mission accomplishment. Commanders may place all or part of their units in different MOPP levels or authorize variations within a given MOPP level.

Soldiers may leave the overgarment jacket open at MOPP1, MOPP2, or MOPP3 allowing greater ventilation. Soldiers may leave the hood open or rolled at MOPP3. The various configurations of the last two MOPP levels with the hood rolled or open are referred to as "Mopp open." Commanders decide which of these variations to use based on the threat, temperature, and unit work intensity.

Units may be granted the flexibility to raise or lower their protective posture from that recommended by higher headquarters. This may be done down to platoon level and by an element that finds itself isolated. If higher headquarters specifically denies this flexibility, then protective postures may only be raised, not lowered.

W A R N I N G

Do not use mask-only when blister or persisent nerve agents are present.

Managing Performance Problems

- heat stress
- hunger
- thirst
- discomfort
- performance degradation
- reduced ability to see and hear
- increased feelings of isolation end confusion
- frustration end claustrophobia or panic
- degraded alertness and attention

Physiological factors during sustained periods of MOPP are:

Table 3-5 provides examples that can be used as a guide in estimating the work

Table 3-5. Work intensities of military tasks.

Work intensity in MOPP Zero—MOPP1	Activity	Work intensity in MOPP2—MOPP4
Very light	•Lying on ground •Standing in foxhole •Sitting in truck •Guard duty •Driving truck	Very light
Light	•Cleaning rifle •Walking, hard surface/1m/s, no load •Walking, hard surface/1m/s, 20 kg load •Manual of arms •Walking, hard surface/1 m/s, 30 kg load	Light
Moderate	•Walking, loose sand/1 m/s,no load •Walking, hard surface-/1.56 m/s, no load •Calisthenics	Moderate
	•Walking, hard surface/1.56 m/s, 20 kg load •Scouting patrol •Pick and shovel •Crawling, full pack •Digging foxholes •Field assaults	Heavy
Heavy	•Walking, hard surface/1.56 m/s, 30 kg load •Walking, hard surface/2.0 m/s, no load •Emplacement digging •Walking, hard surface/2.25 m/s, no load •Walking, loose sand/1.56 m/s, no load	The work intensity categories of this table are based on metabolic expenditures. Very light = 105 to 175 watts Light = 172 to 325 watts Moderate = 325 to 500 watts Heavy = 500+ watts Moderate = 325 to 500 watts Heavy = 500+ watts The weight of the chemical protective overboots is a primary contributor to increased work intensity in MOPP.

The following tables will provide information necessary to calculate recommended work/rest cycles, water requirements, maximum work times and recovery times.

Table 3-6. Number of minutes of work per hour in work/rest cycle (daylight operations).

		MOPP Zero				MOPP4 + Underwear				MOPP4 + BDU			
WBGT	**Ta**	**VL**	**L**	**M**	**H**	**VL**	**L**	**M**	**H**	**VL**	**L**	**M**	**H**
78	82	NL	NL	NL	25	NL	30	10	5	NL	25	10	5
80	84			40	25		25	10	na		20	10	na
82	87			35	20		20	5			15	na	
84	89			30	20		na	na			na		
86	91			30	20								
88	94			20	15								
90	96			20	10								
92	98			10	10								
94	100		30	10	10								
96	103		10	na	na	na				na			
98	105		na										
100	107	na											

KEY TO TABLE:
WBGT - Wet Bulb Globe Temperature (°F)
Ta - Ambient Temperature (Dry Bulb - °F)
VL - Very Light Work Intensity
L - Light Work Intensity
M - Moderate Work Intensity
H - Heavy Work Intensity
BDU - Battle Dress Uniform
NL - No Limit (Continuous Work Possible)
na - Work/Rest Cycle Not Feasible (See Maximum Work Time in Table 3-8)

INSTRUCTIONS AND NOTES:
This table provides, for four levels of work intensity (see Table 3-5), the number of minutes of work per hour in work/rest schedules tailored to the conditions specified. The remainder of each hour should be spent in rest. This table was prepared using the prediction capability of the USARIEM Heat Strain Model. Assumptions used in generating this table include: 1) troops fully hydrated, rested, and acclimated; 2) 50% relative humidity; 3) windspeed = 2m/s; 4) clear skies; 5) heat casualties <5%. This guide should not be used as a substitute for common sense or experience. Individule requirements may very greatly. The appearance of heat casualties is evidence that the selected work/rest schedule is inappropriate for the conditions. USARIEM 1/11/91

Table 3-7. Water requirements for work/rest cycles (qt/hr) (daylight operations).

		MOPP Zero				MOPP4 + Underwear				MOPP4 + BDU			
WBGT	Ta	VL	L	M	H	VL	L	M	H	VL	L	M	H
78	82	0.5	1.0	1.5	1.0	1.0	1.0	1.0	1.0	1.0	1.0	1.0	1.0
80	84	0.5	1.0	1.0	1.0	1.0	1.0	1.0		1.0	1.0	1.0	
82	87	1.0	1.0	1.0	1.0	1.0	1.0	1.0		1.0	1.0		
84	89	1.0	1.0	1.0	1.0	1.0				1.0			
86	91	1.0	1.0	1.0	1.0	1.0				1.0			
88	94	1.0	1.5	1.0	1.0	1.5				1.5			na
90	96	1.0	1.5	1.0	1.0	1.5			na	1.5		na	
92	98	1.0	1.5	1.0	1.0	1.5	na	na		1.5	na		
94	100	1.0	1.5	1.5	1.0	1.5				1.5			
96	103	1.0	1.5										
98	105	1.5	na	na	na	na				na			
100	107	na											

KEY TO TABLE:

WBGT - Wet Bulb Globe Temperature (°F)
Ta - Ambient Temperature (Dry Bulb - °F)
VL - Very Light Work Intensity
L - Light Work Intensity
M - Moderate Work Intensity
H - Heavy Work Intensity
BDU - Battle Dress Uniform
NL - *No Limit (Continuous* Work Possible)
na - Work/Rest Cycle Not Feasible (See Water Requirements in Table 3-9)
USARIEM 1/11/91

INSTRUCTIONS AND NOTES:

Water requirements listed are for both the work/rest schedules specified in Table 3-6 for support of sustained work, and work times unrestricted by thermal stress (unshaded blocks), and work times unrestricted by thermal stress. Work intensities may be estimated using Table 2-1. Drinking should be divided over course of sach hour *to replace water as it is lost* to sweat. The table was prepared using *prediction capabilities* of the USARIEM Heat Strain Model; assumptiong used in generating estimates include 1) troops fully hydrated, rested, and acclimated; 2) 50% relative humidity; 3) windspeed 2m/s; 4) clear skies;5) heat casualties <5%. This guidance is not a substitute for common sense or experience; appearance of heat casualties is evidence that safe work limits (<5% casualties) have been exceeded.

Table 3-8. Maximum work times (minutes) (daylight operations).

		MOPP Zero				MOPP4 + Underwear				MOPP4 +BDU			
WBGT	**Ta**	**VL**	**L**	**M**	**H**	**VL**	**L**	**M**	**H**	**VL**	**L**	**M**	**H**
78	82			NL	65		177	50	33		155	49	32
80	84			157	61		142	49	32		131	48	32
82	87			114	56		115	47	31		110	46	30
84	89		NL	99	53		104	45	30		100	45	30
86	91	NL		87	50	NL	95	44	29	NL	93	44	29
88	94			74	45		85	42	28		83	42	27
90	96			67	43		79	41	27		78	41	27
92	98			60	40		75	40	26		74	40	26
94	100		193	55	37		70	39	25		70	39	25
96	103		101	48	33	203	65	37	23	194	65	37	23
98	105		82	44	31	141	62	36	22	140	62	36	22
100	107	261	70	41	28	118	59	35	21	118	59	35	21

KEY TO TABLE:
WBGT - Wet Bulb Globe Temperature (°F)
T_a - Ambient Temperature (Dry Bulb - °F)
VL - Very Light Work Intensity
L - Light Work Intensity
M - Moderate Work Intensity
H - Heavy Work Intensity
BDU - Battle Dress Uniform
NL - No Limit (Continuous Work Possible)
USARIEM 1/11/91

INSTRUCTIONS AND NOTES:
This table provides for four levels of work intensity (see Table 3-6), the maximum number of minutes work can be sustained in a single work period without exceeding a greater than 5% risk of heat causualties. This table was prepared using the prediction capability of the USARIEM Heat Stain Model. Assumptions used in generating this table include 1) all troops fully hydrated, rested, and acclimatized; 2) 50% relative humidity; 3) windspeed = 2m/s; 4) clear skies. the guidance should not be used as a substitute for common sense or experience. Individual reuirements may very greatly. The appearance of heat casualties is evidence that the safe limits of work time have been reached.

Table 3-9. Water requirements for maximum work times (qt/hr) (daylight operations).

		MOPP Zero				MOPP4 + Underwear				MOPP4 = BDU			
WBGT	Ta	VL	L	M	H	VL	L	M	H	VL	L	M	H
78	82	.5	1.0	1.5	2.0	1.0	1.5	2.0	2.0	1.0	1.5	2.0	2.0
80	84	.5	1.0	1.5	2.0	1.0	1.5	2.0	2.0	1.0	1.5	2.0	2.0
82	87	1.0	1.0	1.5	2.0	1.0	1.5	2.0	2.0	1.0	1.5	2.0	2.0
84	89	1.0	1.0	1.5	2.0	1.0	1.5	2.0	2.0	1.0	1.5	2.0	2.0
86	91	1.0	1.0	1.5	2.0	1.0	1.5	2.0	2.0	1.0	2.0	2.0	2.0
88	94	1.0	1.5	2.0	2.0	1.5	2.0	2.0	2.0	1.5	2.0	2.0	2.0
90	96	1.0	1.5	2.0	2.0	1.5	2.0	2.0	2.0	1.5	2.0	2.0	2.0
92	98	1.0	1.5	2.0	2.0	1.5	2.0	2.0	2.0	1.5	2.0	2.0	2.0
94	100	1.0	1.5	2.0	2.0	1.5	2.0	2.0	2.0	1.5	2.0	2.0	2.0
96	103	1.0	1.5	2.0	2.0	1.5	2.0	2.0	2.0	1.5	2.0	2.0	2.0
98	105	1.5	2.0	2.0	2.0	2.0	2.0	2.0	2.0	2.0	2.0	2.0	2.0
100	107	1.5	2.0	2.0	2.0	2.0	2.0	2.0	2.0	2.0	2.0	2.0	2.0

KEY TO TABLE:
WBGT - Wet Bulb Globe Temperature (°F)
Ta - Ambient Temperature (Dry Bulb - °F)
VL - Very Light Work Intensity
L - Light Work Intensity
M - Moderate Work Intensity
H - Heavy Work Intensity
BDU - Battle Dress Uniform
USARIEM 1/11/91

INSTRUCTIONS AND NOTES:
Amounts listed are required to support maximum work times in Table 3-8; estimate work intensities using Table 3-5. Drinking should be divided over course of each hour. If water requirement is 2.0, sweat loss is greater than maximum water absorption during an hour, and troops will become increasingly dehydrated regardless of amount drunk; leaders should plan for an extended rest and rehydration period at work completion. The table was prepared using prediction capability of the USARIEM Heat Strain Model; assumptions used in generating estimates include 1) troops fully hydrated, rested, and acclimatized; 2) 50% relative humidity; 3) windspeed = 2 m/s; 4) clear skies; 5) heat casualties <5%. This guidance is not a substitute for common sense or experience; appearance of heat casualties is evidence that safe work limits (<5% casualties) have been exceeded.

Table 3-10. Recovery time estimates after maximum work (hours of rest in the shade).

WBGT	Ta	MOPP Zero	MOPP4
60	68	0.25	1.0
66	75	0.25	1.0
72	82	0.5	1.5
74	84	0.5	1.5
76	86	0.5	2.0
78	88	0.5	2.0
80	91	0.5	3.0
82	93	0.5	4.0
84	95	0.5	6.0
86	97	1.0	15.0
88	100	1.0	NCP
90	102	1.0	
92	104	1.5	
94	106	2.0	
96	109	8.0	
98	111	NCP	
100	113		

KEY TO TABLE:
WBGT - Wet Bulb Globe Temperature (°F) As Measured in shade (If Only Full Sun WBGT Is Available, Subtract 5°F WBGT Before Using This Table)
Ta - Ambient Temperature (Dry Bulb -°F)
MOPP Zero - Battle Dress Uniform Only
MOPP4 - Battle Dress Overgarment and Mask (Closed)
NCP - No Cooling Possible Under These Conditions - Seek Cooler Location and/or Remove BDO

NOTES AND INSTRUCTIONS:
This table provides the number of hours rest in the shade that should be required after working the maximum work times specified in Table 3-8 or 3-13. This table was prepared using the cooling capacity equations of the USARIEM Heat Strain Model. Assumptions used in generating this table include 1) troops fully hydrated and acclimatized; 2) 50% relative humidity; 3) windspeed = 2m/s; 4) no solar load; 5) recovery of normal body temperature. This guidance should not be used as a substitute for common sense or experience. Individual requirements may vary greatly.
USARIEM 1/11/91

Table 3-11. Number of minutes of work per hour in work/rest cycle (night operations).

		MOPP Zero				MOPP4 + Underwear				MOPP4 + BDU			
WBGT	**Ta**	**VL**	**L**	**M**	**H**	**VL**	**L**	**M**	**H**	**VL**	**L**	**M**	**H**
60	68				40			30	20			25	15
66	75				40			25	15			25	15
72	82				35		NL	20	15		NL	20	10
78	88			NL	30			15	10			15	10
80	91				25			15	5			15	5
82	93	NL	NL		25	NL	30	10	5	NL	25	10	5
84	95			40	25		25	10			20	5	
86	97			35	20		15	5			10		
88	100			30	20				na				na
90	102			25	15		na	na			na	na	
92	104			20	15								
94	106			15	10								

KEY TO TABLE:

WBGT - Wet Bulb Globe Temperature (°F)
Ta - Ambient Temperature (Dry Bulb - °F)
VL - Very Light Work Intensity
L - Light Work Intensity
M - Moderate Work Intensity
H - Heavy Work Intensity
BDU - Battle Dress Uniform
NL - No Limit (Continuous Work Possible)
na - Work/Rest Cycle Not Feasible (See Maximum Work Time in Table 3-13)

INSTRUCTIONS AND NOTES:

This table provides, for four levels of work intensity (see Table 3-5), the number of minutes of work per hour in work/rest schedules tailored to the conditions specified. The remainder of each hour should be spent in rest. This table was prepaired using the prediction capability of the USARIEM Heat Strain Model. Assumptions used in generating this table include: 1) troops fully hydrated, rested, and acclimated; 2) 50% relative humidity; 3) windspeed = 2m/s; 4) clear skies; 5) heat casualties <5%. This guide should not be used as a substitute for common sense or experience. Individual requirements may vary greatly. The appearance of heat casualties is evidence that the selected work/rest schedule is inappropriate for the conditions. USARIEM 1/11/91

Table 3-12. Water requirements for work/rest cycles (qt/hr) (night operations).

		MOPP Zero				MOPP4 + Underwear				MOPP4 + BDU			
WBGT	Ta	VL	L	M	H	VL	L	M	H	VL	L	M	H
60	68	0.25	0.25	0.5	1.0	0.25	1.0	1.0	1.0	0.25	1..0	1.0	1.0
66	75	0.25	0.25	1.0	1.0	0.5	1.0	1.0	1.0	0.5	1.0	1.0	1.0
72	82	0.25	0.5	1.0	1.0	0.5	1.0	1.0	1.0	0.5	1.0	1.0	1.0
78	88	0.25	0.5	1.0	1.0	1.0	1.5	1.0	1.0	1.0	1.5	1.0	1.0
80	91	0.5	1.0	1.5	1.0	1.0	1..5	1.0	1.0	1.0	1.5	1.0	1.0
82	93	0.5	1.0	1.5	1.0	1.0	1.0	1.0	1.0	1.0	1.0	1.0	1.0
84	95	0.5	1.0	1.0	1.0	1.0	1.0	1.0		1.0	1.0	1.0	
86	97	0.5	1.0	1.0	1.0	1.0	1.0	1.0		1.0	1.0		
88	100	0.5	1.0	1.0	1.0	1.0				1.0			na
90	102	1.0	1.0	1.0	1.0	1.0	na	na		1.0	na	na	
92	104	1.0	1.5	1.0	1.0	1.5				1.5			
94	106	1.0	1.5	1.0	1.0	1.5				1.5			

KEY TO TABLE:

WBGT - Wet Bulb Globe Temperature (°F)
Ta - Ambient Temperature (Dry Bulb - °F)
VL - Very Light Work Intensity
L - Light Work Intensity
M - Moderate Work Intensity
H - Heavy Work Intensity
BDU - Battle Dress Uniform
NL - No Limit (Continuous Work Possible)
na - Work/Rest Cycle Not Feasible (See Maximum Work Time in Table 3-13)
USARIEM 1/10/91

INSTRUCTIONS AND NOTES:

Amounts listed are required to support work/rest schedules in Table 3-11; drinking should be divided over course of each hour to replace water as it is lost to sweat. Use Table 3-14 to determine water required to support maximum work times shown in Table 3-13. The table was prepared using prediction capabilities of the USARIEM Heat Strain Model; assumptions used in generating estimates include 1) troop fully hydrated, rested, and acclimatized; 2) 50% relative humidity; 3) windspeed = 2 m/s; 4) no solar load; 5) heat casualties <5%. This guidance is not a substitute for common sense or experience;appearance of heat casualties is evidence that safe work limits (<5% casualties) have been exceeded (that the selected work/rest cycle and/or water guidance is inappropriate for the conditions).

Table 3-13. Maximum work times (minutes) (night operations).

		MOPP Zero				MOPP4 + Underwear				MOPP4 + BDU			
WBGT	Ta	VL	L	M	H	VL	L	M	H	VL	L	M	H
60	68				188			76	42			73	41
66	75				119			66	39			64	38
72	82			NL	90		NL	58	36		NL	57	36
78	88				72			53	34			52	33
80	91				64			50	32			50	32
82	93	NL	NL		60	NL	206	49	32	NL	168	48	31
84	95			139	55		144	47	31		133	47	30
86	97			107	51		121	46	30		115	45	29
88	100			82	46		100	44	28		97	43	28
90	102			71	42		91	42	27		89	42	27
92	104			63	39		83	41	26		82	41	26
94	106			56	36		77	40	25		76	40	25

KEY TO TABLE:
WBGT - Wet Bulb Globe Temperature (°F)
Ta - Ambient Temperature (Dry Bulb - °F)
VL - Very Light Work Intensity
L - Light Work Intensity
M - Moderate Work Intensity
H - Heavy Work Intensity
BDU - Battle Dress Uniform
NL - No Limit (Continuous Work Possible)
USARIEM 1/10/91

INSTRUCTIONS AND NOTES:
This table provides for four levels of work intensity (se Table 3-5), the maximum number of minutes of work that can be sustained in a single work period without exceeding a greater than 5% risk of heat casualties. This table was prepared using the prediction capability of the USARIEM Heat Strain Model. Assumptions used in generating this table include 1) all troops fully hydrated, rested, and acclimatized; 2) 50% relative humidity; 3) windspeed = 2 m/s; 4) no solar load. The guidance should not be used as a substitute for common sense or experience. Individual requirements may vary greatly. The appearance of heat casualties is evidence that the safe limits of work time have been reached.

Table 3-14. Water requirements for maximum times (qt/hr) (night operations).

		MOPP Zero				MOPP4 + Underwear				MOPP4 + BDU			
WBGT	Ta	VL	L	M	H	VL	L	M	H	VL	L	M	H
60	68	0.25	0.25	0.5	1.0	0.25	1.0	1.5	2.0	0.25	1.0	1.5	2.0
66	75	0.25	0.25	1.0	1.5	0.5	1.0	2.0	2.0	0.5	1.0	2.0	2.0
72	82	0.25	0.5	1.0	1.5	0.5	1.0	2.0	2.0	0.5	1.0	2.0	2.0
78	88	0.25	0.5	1.0	1.5	1.0	1.5	2.0	2.0	1.0	1.5	2.0	2.0
80	91	0.5	1.0	1.5	2.0	1.0	1.5	2.0	2.0	1.0	1.5	2.0	2.0
82	93	0.5	1.0	1.5	2.0	1.0	1.5	2.0	2.0	1.0	1.5	2.0	2.0
84	95	0.5	1.0	1.5	2.0	1.0	1.5	2.0	2.0	1.0	1.5	2.0	2.0
86	97	0.5	1.0	1.5	2.0	1.0	1.5	2.0	2.0	1.0	1.5	2.0	2.0
88	100	0.5	1.0	1.5	2.0	1.0	2.0	2.0	2.0	1.0	2.0	2.0	2.0
90	102	1.0	1.0	2.0	.20	1.0	2.0	2.0	2.0	1.0	2.0	2.0	2.0
92	104	1.0	1.5	2.0	2.0	1.5	2.0	2.0	2.0	1.5	2.0	2.0	2.0
94	106	1.0	1.5	2.0	2.0	1.5	2.0	2.0	2.0	1.5	2.0	2.0	2.0

KEY TO TABLE:

WBGT - Wet Bulb Globe Temperature (°F)
Ta - Ambient Temperature (Dry Bulb - °F)
VL - Very Light Work Intensity
L - Light Work Intensity
M - Moderate Work Intensity
H - Heavy Work Intensity
BDU - Battle Dress Uniform
NL - *No Limit* (Continuous Work Possible)
USARIEM 1/10/91

INSTRUCTIONS AND NOTES:

Amounts listed are required to support maximum work times in Table 3-13; drinking should be divided over course of each hour. If water requirement is 2.0, sweat loss is greater than maximum water absorption during an hour, and troops will become increasingly dehydrated regardless of amount drunk; leaders should plan for an extended rest and rehydration period at work completion (see Table 3-10). This table was prepared using prediction capability of the USARIEM Heat Strain Model; assumptions used in generating estimates include 1) troops fully hydrated, rested, and acclimatized; 2) 50% relative humidity; 3) windspeed = 2 m/s; 4) no solar load; 5) heat casualties <5%. This guidance is not a substitute for common sense or experience; appearance of heat casualties is evidence that safe work limits (casualties) have been exceeded.

Table 3-15. Wind speed effects on arrival time of chemical agents.

Wind speed (kmph)	Time before agent reaches unit location (seconds)	Distance between unit and detectors (meters)
5	108	150
10	54	150
15	36	150
20	27	150
25	22	150

Table 3-16. Detectors required for different size unit fronts.

Unit front size (in meters)	Number of detector units
1—35	1
37—372	2
373—708	3
709—1,044	4
1,045—1,380	5

Table 3-17. M8A1 alarm battery life.

Average air temperature		Maximum number of 12-hour missions	
°F	°C	BB501/U	BA3517/U
120-90	50-32	14	6
80	27	12	8
70	21	12	8
60	15	10	5
50	10	9	3
40	4	8	2
32	0	6	1
20	-4	5	1
10	-13	3	Do not use below 20°F (-4°C)
0	-17	2	
-10 to -40	-22 to -40	1	

NOTE: If battery fails or you have no batteries, refer to TM 3-251-BD for a field expedient method of powering the alarm.

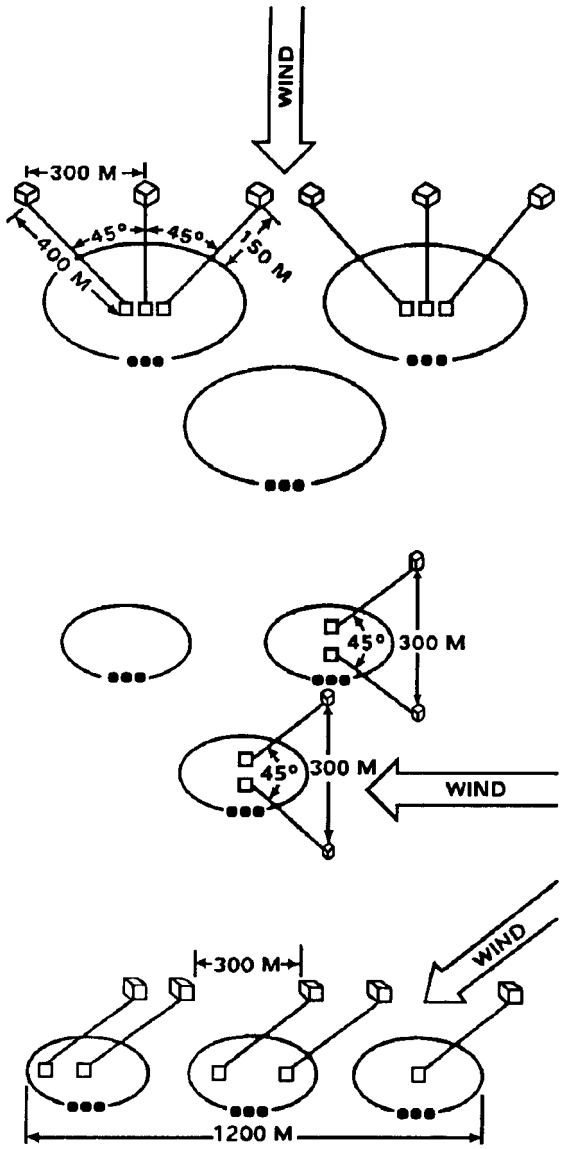

Figure 3-1. Fixed emplacement of M8A1 alarms.

CAM

There are eight bar indicators: one to three bars = low vapor hazard, four to six bars = low vapor hazard, four to six bars = high vapor hazard, and seven to eight bars = very high levels of vapor hazard.

Table 3-18. Common Interferents for the CAM

Interferent	G bar response	H bar response
M258A1 decon kit		High
M280 DKIE		High
DS2	Low	
Insect repellant	Low-Very high	
Brake fluid	High-Very high	Very high
Cleaner, general purpose	High	
Burning kerosene		High
Breath mints	High	
Gasoline vapor	Low	Low
Burning grass	Low-High	Low
Burning gas	Low	

Unmasking Procedures

Without detection equipment

1. In a shady area, have one or two soldiers take a deep breath, hold it, and break their mask seals for 15 seconds with their eyes open.

2. Have them clear and reseal masks. Observe them for 10 minutes for symptoms.

3. If no symptoms appear, have the same soldiers break their mask seals, take two or three breaths, clear and reseal their masks. Observe them for 10 minutes for symptoms.

4. If no symptoms appear have the same soldiers unmask for 5 minutes and then remask. If no symptoms appear in 10 minutes, it is safe to give the all clear signal and unmask.

5. Continue to observe the soldiers in ease delayed symptoms develop.

With M256 or M256A1 Detector Kit

1. Test with the detector kit.

2. If the test is negative, have one or two soldiers move to a shady area if possible, and unmask for 5 minutes. Have the soldiers remask. Observe them for 10 minutes for symptoms.

3. If no symptoms appear, it is safe to give the all clear signal and unmask. The senior leader present may ask higher headquarters for permission.

4. Continue to watch soldiers for possible delayed symptoms.

Using Estimated Wait Times Before Executing Open/Unmasking Time Tables

NOTE: All tables are ICT 5 risk level (Incapacitating dosage of vapor sufficient to disable 5% of exposed soldiers).

Formula Procedure

a. Variables

P = Percent of worst case time remaining

O = Original worst case time from table

N = New worst case time from table

T = Time between original estimate and weather change

U = Updated worst case time

b. Procedure.

Read O directly from table

Weather change:

P= (O-T)/O
U = PxN

Weather changes again:

Set O=U
Set T = time since last weather change

Repeat as required

Table 3-19. Estimated worst case MOPP open times.

Agent: GA/GF
Terrain: Sand
The numnbers in the chart represent hours.

Wind Speed KMPH	Stability	Temperature (°F)							
		50	60	70	80	90	100	110	120
0-10	Unstable	60+	53	33	20	13	10	8	5
	Neutral	60+	60+	45	28	18	13	8	5
	Stable	60+	60+	58	38	23	15	10	8
11-24	Unstable	13	8	5	3	3	2	2	2
	Neutral	20	13	8	5	5	3	2	2
	Stable	20	13	8	5	5	3	2	2
> = 25	Neutral	2	2	2	2	2	2	2	2

NOTES:
1. Worst case MOPP open time—information in the table indicates the time for GA/GF to weather below 5 percent incidence of incapacitation due to vapor-on-skin effects. DO NOT OPEN MOPP WITHOUT FOLLOWING MOPP OPENING PROCEDURES!
2. Opening the MOPP suit—unzip and/or unsnap MOPP clothing; do not remove.
3. When the actual temperature is between two listed temperatures, enter the table with the lower temperature. To get times for grass terrain, multiply numbers in the chart by 0.4. DO NOT INTERPOLATE!
4. See FM 3-6 for definition of stability categories.

Table 3-20. Estimated worst case unmasking times.

Agent: GA/GF
Terrain: Sand
The numnbers in the chart represent hours.

Wind Speed KMPH	Stability	Temperature (°F)							
		50	60	70	80	90	100	110	120
0-10	Unstable	60+	60+	60+	55	35	25	15	13
	Neutral	60+	60+	60+	60+	45	30	20	13
	Stable	60+	60+	60+	60+	55	35	23	15
11-24	Unstable	60+	60+	60+	38	23	15	10	8
	Neutral	60+	60+	60+	43	28	18	13	10
	Stable	60+	60+	60+	45	30	20	13	10
> = 25	Neutral	60+	60+	35	23	15	10	8	5

NOTES:
1. Worst case MOPP open time—information in the table indicates the time for GA/GF to weather below 5 percent incidence of incapacitation due to vapor-on-skin effects. DO NOT OPEN MOPP WITHOUT FOLLOWING MOPP OPENING PROCEDURES!
2. Opening the MOPP suit—unzip and/or unsnap MOPP clothing; do not remove.
3. When the actual temperature is between two listed temperatures, enter the table with the lower temperature. To get times for grass terrain, multiply numbers in the chart by 0.4. DO NOT INTERPOLATE!
4. See FM 3-6 for defination of stability categories.

Table 3-21. Estimated worst case MOPP open unmasking times.

Agent: GA/GF
Terrain: CARC
The numnbers in the chart represent hours.

Wind Speed KMPH	Stability	Temperature (°F)							
		50	60	70	80	90	100	110	120
0-10	Unstable	1.25	0.75	0.50	0.25	0.25	0.25	0.25	0.25
	Neutral	1.50	1.0	0.50	0.50	0.25	0.25	0.25	0.25
	Stable	1.50	1.0	0.50	0.50	0.25	0.25	0.25	0.25
11-24	Unstable	0.75	0.50	0.25	0.25	0.25	0.25	0.25	0.25
	Neutral	0.75	0.50	0.25	0.25	0.25	0.25	0.25	0.25
	Stable	1.0	0.50	0.50	0.25	0.25	0.25	0.25	0.25
> = 25	Neutral	0.50	0.50	0.25	0.25	0.25	0.25	0.25	0.25

NOTES:
1. Worst case MOPP open/unmasking time—information in the table indicates the time for GA/GF to weather below 5 percent incidence of incapacitation due to vapor-on-skin and inhalation. DO NOT OPEN MOPP WITHOUT FOLLOWING MOPP OPENING PROCEDURES! DO NOT UNMASK WITHOUT FOLLOWING UNMASKING PROCEDURES
2. Opening the MOPP suit—unzip and/or unsnap MOPP clothing; do not remove.
3. When the actual temperature is between two listed temperatures, enter the table with the lower temperature. To get times for grass terrain, multiply numbers in the chart by 0.4. DO NOT INTERPOLATE!
4. If soldiers are working on vehicles, avoid skin contact with the vehicle.
5. See FM 3-6 for definition of stability categories.
6. For planning, ensure the following steps are taken:
   a. Remove as much earth and debris as possible from the CARC painted surface and conduct operator spraydown.
   b. Above times are estimated weathering times for CARC painted surfaces; confine contamination-free status by using detection devices before MOPP reduction.
   c. If possible, move uncontaminated equipment from the contaminated area.
   d. Anything not painted with CARC (such as concrete, plastics, and weapons) must be individually checked for contamination.

Table 3-22. Estimated worst case MOPP open times.

Agent: HD
Terrain: Sand
The numnbers in the chart represent hours.

Wind Speed KMPH	Stability	Temperature (°F)							
		50	60	70	80	90	100	110	120
0-10	Unstable	60 +	60 +	60 +	60 +	48	32	23	15
	Neutral	60 +	60 +	60 +	60 +	60 +	43	28	20
	Stable	60 +	60 +	60 +	60 +	60 +	58	38	25
11-24	Unstable	60 +	60 +	43	28	18	13	8	5
	Neutral	60 +	60 +	60 +	38	25	18	10	8
	Stable	60 +	60 +	60 +	40	28	18	13	8
> = 25	Neutral	33	20	13	8	5	5	3	3

NOTES:
1. Worst case MOPP open time—information in the table indicates the time for HD to weather below 5 percent incidence of incapacitation due to vapor-on-skin effects. To get times for grass terrain, multiply numbers in the chart by 0.4. DO NOT OPEN MOPP WITHOUT FOLLOWING MOPP OPENING PROCEDURES!
2. Opening the MOPP suit—unzip and/or unsnap MOPP clothing; do not remove.
3. When the actual temperature is between two listed temperatures, enter the table with the lower temperature. DO NOT INTERPOLATE!
4. See FM 3-6 for definition of stability categories.

Table 3-23. Estimated worst case unmasking times.

Agent: HD
Terrain: Sand
The numnbers in the chart represent hours.

Wind Speed KMPH	Stability	Temperature (°F)							
		50	60	70	80	90	100	110	120
0-10	Unstable	60+	60+	60+	60+	53	35	23	18
	Neutral	60+	60+	60+	60+	60+	48	33	23
	Stable	60+	60+	60+	60+	60+	60+	45	28
11-24	Unstable	60+	60	58	38	25	15	10	8
	Neutral	60+	60+	60+	50	33	23	15	10
	Stable	60+	60+	60+	53	35	23	15	10
>=25	Neutral	53	33	20	13	8	5	5	3

NOTES:
1. Worst case unmasking time—information in the table indicates the time for HD to weather below 5 percent incidence of incapacitation due to inhalation. To get times for grass terrain, multiply numbers in the chart by 0.4. DO NOT UNMASK WITHOUT FOLLOWING UNMASKING PROCEDURES!
2. When the actual temperature is between two listed temperatures, enter the table with the lower temperature. TDO NOT INTERPOLATE!.
3. See FM 3-6 for definition of stability categories.

Table 3-24. Estimated worst case MOPP open/unmasking times.

Agent: HD
Terrain: CARC
The numnbers in the chart represent hours.

Wind Speed KMPH	Stability	Temperature (°F)							
		50	60	70	80	90	100	110	120
0-10	Unstable	11	7	5	3	2	2	1	1
	Neutral	12	8	5	4	2	2	1	1
	Stable	13	8	5	4	2	2	1	1
11-24	Unstable	7	5	3	2	2	1	1	1
	Neutral	8	5	3	2	2	1	1	1
	Stable	8	5	3	2	2	1	1	1
> =25	Neutral	5	3	2	1	1	1		1

NOTES:
1. Worst case MOPP open/unmasking time—information in the table indicates the time for HD to weather below 5 percent incidence of incapacitation due to vapor-on-skin and inhalation. DO NOT OPEN MOPP WITHOUT FOLLOWING MOPP OPENING PROCEDURES! DO NOT UNMASK WITHOUT FOLLOWING UNMASKING PROCEDURES!
2. *Opening the MOPP suit—unzip and/or unsnap* MOPP clothing; do not remove.
3. When the actual temperature is between two listed temperatures, enter the table with the lower temperature. DO NOT INTERPOLATE!
4. If soldiers are working on vehicles, avoid skin contact with the vehicle.
5. See FM 3-6 for definition of stability categories.
6. *For planning, ensure the following steps are taken:*
   a. Remove as much earth and debris as possible from the CARC painted surface and conduct operator spraydown.
   b. Above times are estimated weathering times for CARC painted surfaces; confine contamination-free status by using detection devices before MOPP reduction.
   c. *If possible, move uncontaminated equipment from the contaminated area.*

Table 3-25. Estimated worst case MOPP open/unmasking times.

Agent: VX
Terrain: Sand
The numnbers in the chart represent hours.

Wind Speed KMPH	Stability	Temperature (°F)							
		50	60	70	80	90	100	110	120
0-10	Unstable	60+	55	50	45	36	26	17	8
	Neutral	60+	60+	60+	60+	49	38	26	15
	Stable	60+	60+	60+	45	51	41	32	23
11-24	Unstable	60+	55	50	45	35	25	15	5
	Neutral	60+	60+	60+	60+	48	35	23	10
	Stable	60+	60+	60+	60+	49	38	26	15
> =25	Neutral	60+	60+	60+	60+	47	34	21	8

NOTES:
1. Worst case MOPP open time—information in the table indicates the time for VX to weather below 5 percent incidence of incapacitation due to vapor-on-skin and inhalation. DO NOT OPEN MOPP WITHOUT FOLLOWING MOPP OPENING PROCEDURES! DO NOT UNMASK WITHOUT FOLLOWING UNMASKING PROCEDURES!
2. Opening the MOPP suit—unzip and/or unsnap MOPP clothing; do not remove.
3. When the actual temperature is between two listed temperatures, enter the table with the lower temperature. To get times for grass terrain, multiply numbers in the chart by 0.4. DO NOT INTERPOLATE!
4. See FM 3-6 for definition of stability categories.

Table 3-26. Estimated worst case MOPP open/unmasking times.

Agent: VX
Terrain: CARC
The numnbers in the chart represent hours.

Wind Speed KMPH	Stability	Temperature (°F)							
		50	60	70	80	90	100	110	120
0-10	Unstable	8.25	5.25	3.5	2.25	1.5	1	0.75	0.5
	Neutral	8	5	3.25	2	1.25	1	0.75	0.5
	Stable	9.25	6	3.75	2.5	1.5	1	0.75	0.5
11-24	Unstable	5	3	2	1.25	0.75	0.5	0.25	0.25
	Neutral	5	3.25	2	1.25	0.75	0.5	0.5	0.25
	Stable	5.75	3.5	2.25	1.5	1	0.75	0.5	0.25
> =25	Neutral	3.25	2	1.25	0.75	0.5	0.5	0.25	0.25

NOTES:
1. Worst case MOPP open/unmasking time—information in the table indicates the time for VX to weather below 5 percent incidence of incapacitation due to vapor-on-skin and inhalation. DO NOT OPEN MOPP WITHOUT FOLLOWING MOPP OPENING PROCEDURES! DO NOT UNMASK WITHOUT FOLLOWING UNMASKING PROCEDURES!
2. Opening the MOPP suit—unzip and/or unsnap MOPP clothing; do not remove.
3. When the actual temperature is between two listed temperatures, enter the table with the lower temperature. DO NOT INTERPOLATE!
4. If soldires are working on vehicles, avoid skin contact with the vehicles.
5. See FM 3-6 for definition of stability categories.
6. For planning, ensure the following steps are taken:
   a. Remove as much earth and debris as possible from the CARC painted surface and conduct operator spraydown.
   b. Above times are estimated weathering times for CARC painted surfaces; confine contamination-free status by using detection devices before MOPP reduction.
   c. If possible, move uncontaminated equipment from the contaminated area.
   d. Anything not painted with CARC (such as concrete, plastics, and weapons) must be individually checked for contamination.

Table 3-27. Estimated worst case MOPP open times.

Agent: TGD
Terrain: Sand
The numnbers in the chart represent hours.

Wind Speed KMPH	Stability	Temperature (°F)							
		50	60	70	80	90	100	110	120
0-10	Unstable	8	6	4	3	3	3	3	3
	Neutral	8	7	6	5	4	4	3	3
	Stable	25	22	18	15	13	10	8	5
11-24	Unstable	3	3	3	3	3	3	3	3
	Neutral	5	4	3	3	3	3	3	3
	Stable	5	4	3	3	3	3	3	3
> = 25	Neutral	3	3	3	3	3	3	3	3

NOTES:
1. Worst case MOPP open time—information in the table indicates the time for TGD to weather below 5 percent incidence of incapacitation due to vapor-on-skin effects. DO NOT OPEN MOPP WITHOUT FOLLOWING MOPP OPENING PROCEDURES!
2. Opening the MOPP suit—unzip and/or unsnap MOPP clothing; do not remove.
3. When the actual temperature is between two listed temperatures, enter the table with the lower temperature. To get times for grass terrain, multiply numbers in the chart by 0.4. DO NOT INTERPOLATE!
4. See FM 3-6 for definition of stability categories.

Table 3-28. Estimated worst case UNMASKING times.

Agent: TGD
Terrain: Sand
The numnbers in the chart represent hours.

Wind Speed KMPH	Stability	Temperature (°F)							
		50	60	70	80	90	100	110	120
0-10	Unstable	60	46	32	18	14	10	6	3
	Neutral	60 +	53	47	40	33	25	18	10
	Stable	60 +	60 +	60 +	60	48	36	24	13
11-24	Unstable	25	18	12	5	4	4	3	3
	Neutral	60	45	30	15	12	9	6	3
	Stable	60	45	30	15	12	9	6	3
> = 25	Neutral	18	12	7	3	3	3	3	3

NOTES:
1. Worst case MOPP open time—information in the table indicates the time for TGD to weather below 5 percent incidence of incapacitation due to vapor-on-skin effects. DO NOT UNMASK WITHOUT FOLLOWING UNMASKING PROCEDURES!
2. When the actual temperature is between two listed temperatures, enter the table with the lower temperature. To get times for grass terrain, multiply numbers in the chart by 0.4. DO NOT INTERPOLATE!
3. See FM 3-6 for definition of stability categories.

Table 3-29. Estimated worst case MOPP open times.

Agent: TGD
Terrain: CARC
The numnbers in the chart represent hours.

Wind Speed KMPH	Stability	Temperature (°F)							
		50	60	70	80	90	100	110	120
0-10	Unstable	1.75	1	0.75	0.5	0.25	0.25	0.25	0.25
	Neutral	1.75	1	0.75	0.5	0.25	0.25	0.25	0.25
	Stable	2	1.25	0.75	0.5	0.25	0.25	0.25	0.25
11-24	Unstable	1	0.75	0.5	0.25	0.25	0.25	0.25	0.25
	Neutral	1	0.75	0.5	0.25	0.25	0.25	0.25	0.25
	Stable	1.25	0.75	0.5	0.25	0.25	0.25	0.25	0.25
> = 25	Neutral	0.75	0.5	0.25	0.25	0.25	0.25	0.25	0.25

NOTES:
1. Worst case MOPP open time—information in the table indicates the time for TGD to weather below 5 percent incidence of incapacitation due to vapor-on-skin effects. DO NOT OPEN MOPP WITHOUT FOLLOWING MOPP OPENING PROCEDURES!
2. Opening the MOPP suit—unzip and/or unsnap MOPP clothing; do not remove.
3. When the actual temperature is between two listed temperatures, enter the table with the lower temperature. DO NOT INTERPOLATE!
4. If soldiers are working on vehicles, avoid skin contact with the vehicles.
5. See FM 3-6 for defination of stability categories.
6. For planning, ensure the following steps are taken:
   a. Remove as much earth and debris as possible from the CARC painted surface and conduct operator spraydown.
   b. Above times are estimated weathering times for CARC painted surfaces; confine contamination-free status by using detection devices before MOPP reduction.
   c. If possible, move uncontaminated equipment from the contaminated area.
   d. Anything not painted with CARC (such as concrete, plastics, and weapons) must be individually checked for contamination.

Table 3-30. Estimated worst case unmasking times.

Agent: TGD
Terrain: CARC
The numnbers in the chart represent hours.

Wind Speed KMPH	Stability	Temperature (°F)							
		50	60	70	80	90	100	110	120
0-10	Unstable	3.25	2	1.25	0.75	0.5	0.25	0.25	0.25
	Neutral	3.25	2	1.25	0.75	0.5	0.25	0.25	0.25
	Stable	3.5	2.25	1.5	1	0.5	0.5	0.25	0.25
11-24	Unstable	2	1.25	0.75	0.5	0.25	0.25	0.25	0.25
	Neutral	2	1.25	0.75	0.5	0.25	0.25	0.25	0.25
	Stable	2.25	1.25	1	0.5	0.25	0.25	0.25	0.25
> =25	Neutral	1.25	0.75	0.5	0.25	0.25	0.25	0.25	0.25

NOTES:
1. Worst case unmasking time—information in the table indicates the time for TGD to weather below 5 percent incidence of incapacitation due to vapor-on-skin effects. DO NOT UNMASK WITHOUT FOLLOWING UNMASKING PROCEDURES!
2. When the actual temperature is between two listed temperatures, enter the table with the lower temperature. TDO NOT INTERPOLATE!
3. If soldiers are working on vehicles, avoid skin contact with the vehicles.
4. See FM 3-6 for defination of stability categories.
5. For planning, ensure the following steps are taken:
   a. Remove as much earth and debris as possible from the CARC painted surface and conduct operator spraydown.
   b. Above times are estimated weathering times for CARC painted surfaces; confine contamination-free status by using detection devices before MOPP reduction.
   c. If possible, move uncontaminated equipment from the contaminated area.
   d. Anything not painted with CARC (such as concrete, plastics, and weapons) must be individually checked for contamination.

Decontamination Resources Available at Each Level of Organization

Individual Soldiers

- One M258Al or M291 skin decon kit.
- One canteen of water.

Operators and crews

- One onboard Mll decon apparatus or M13 decon apparatus, portable (DAP), for major pieces of equipment.
- Soap and water, M258A1 or M291 kits as needed for decon of sensitive or vulnerable surfaces.
- HTH mixture or bleach.
- M280 or M295 decon kit.

Company Level

- **One** 50-pound drum of STB.
- Two 5-gallon pails of DS2 or 2 M13 DAPs.
- Six long-handled brushes.
- 300 plastic garbage bags.
- Six 3-gallon buckets.
- Six large sponges.
- Two 32-gallon galvanized trash cans (from mess section).
- Two immersion heaters (from mess section).

Battalion PDDE Crews

- Power-driven decontaminating equipment (PDDE) or light weight decon system (LDS).
- Basic load liquid detergent.

Chemical Company Decon Squad

- Ten 5-gallon pails of DS2, or M13 DAPs, per M12A1 (IAW CTA 50-970).
- Twenty-six 50-pound drums of STB per M12A1 (IAW CTA 50-970).
- Power-driven decon equipment.

- Basic load of liquid detergent.

Chemical Company Decon Platoon

- 5-gallon pails of DS2 or M13 DAPs, per M12A1 or M17 LDS (IAW CTA 50-970).
- 50-pound drums of STB per M12A1 (IAW CTA 50-970).
- Power-driven decon equipment or M17 light decon system (dual purpose platoon only).
- Basic load of decontaminants.

Levels of Decontamination

There are three levels of decon: immediate, operational, and thorough.

Immediate Decon minimizes casualties, saves lives, and limits the spread of contamination. Immediate decon is carried out by individuals upon becoming contaminated. There are three immediate techniques: skin decon, personnel wipedown, and operator's spray down.

Operational Decon sustains operations, reduces the contact hazard, and limits the spread of contamination to eliminate the necessity or reduce the duration of wearing MOPP gear. Operational decon is carried by individual and/or units. It is restricted to specific parts of operationally essential equipment/material and/or working areas, in order to minimize contact and transfer hazards and to sustain operations. Further decon may be required to reduce contamination to negligible risk levels. There are two operational decon tehniques: vehicle washdown and MOPP gear exchange.

Thorough Decon reduces or eliminates the need for individual protective clothing. Thorough decon is carried out by units with assistance from chemical units to reduce contamination on personnel, equipment/material, and/or working areas to the lowest possible level (negligible risk) to permit the reduction or removal of individual protective equipment and maintain operations with minimal degradation. This may include decontamination of terrain as required. There are three thorough decon techniques: detailed troop decon, detailed equipment decon, and detailed aircraft decon.

The three levels of decon—immediate, operational, and thorough-are presented as part of this chapter to explain the seven standard decon techniques used for most decon operations. Your chemical officer or NCO advises on efficient ways to conduct operational or thorough decon operations. For example, conducting decon operations might require the use of one or a combination of the seven decon techniques.

Table 3-31. Comparison data for decon types.

Level	Technique	Best Start Time*	Done By	Gains
Immediate	Skin Decon	Before 1 minute	Individual	Stops agent from penetrating
	Personal Wipedown	Within 15 minutes	Individual or Crew	
	Operator Spraydown			
Operational	MOPP Gear Exchange**	Within 6 hours	Unit	Possible temporary relief from MOPP4. Limit liquid agent spread.
	Vehicle Washdown***		Battalion Crew or decon PLT (-)	
Thorough	Detailed Equipment/Aircraft Decon	When mission allows reconstitution	Decon platoon	Probable long-term MOPP reduction with minimum risk
	Detailed Troop Decon		Unit	

* The techniques become increasingly less effective the longer they are delayed.
** Performance degredation and risk assessment need to be considered when exceeding 6 hours. See FM 3-4, BDO risk assessment.
*** Vehicle washdown is most effective if started within 1 hour, but will often have to be delayed for logistical reasons.

Operational Decontamination

Table 3-32. Operational decon responsibility matrix.

Phase		Task	Unit: Contaminated Unit	Unit: Battalion PDDE Crew	Unit: Battalion	Unit: Brigade
Planning	Preparation	Request	P		S	
		Coordination			P	S
		Site Selection	P		S	
		Rendezvous	P		S	
		Site Setup	S	P		
	Execution	Site Control and Security	P			
		Processing	P	S		
	Site Clearance	Cleanup		P		
		Marking and Reporting		P		

Legend: P = Primary responsibility, S = Supporting responsibility

Table 3-33. Sample operational decon checklist.		
	Task	**Procedure**
1	Decon assessmnet	If the battalion has no decon assets, request assistance from the next higher headquarters for needed support.
2	Coordination	Battalion chemical section conducts coordination with contaminated unit on where to meet. The decon should be done between one to six hours after becoming contaminated.
3	Site selection	The contaminated unit chooses the decon site in coordination with the battalion. Consider the following items when selecting a site: • Off main route but easy access • Large enough area, (100 square meters per site for a squad-size element) • Good overhead concealment • water source, (plan for 100 gallons per vehicle) • Good drainage
4	Rendezvous	Ensure the battalion decon crew knows where to meet the contaminated unit, and site location for set up.
5	Site setup	Ensure the PDDE are positioned properly and ready to dispense hot, soapy water. Ensure that the contaminated unit operates the MOPP gear exchange at the same time as the vehicle washdown.
6	Site control and security	Ensure the drivers of the contaminated vehicles know when to move into position at the washdown location. Ensure the contaminated unit has provided site security.
7	Processing	Ensure the decon NCOIC is processing vehicles at a rate of three minutes per vehicle. Also ensure soldiers are going through the MOPP gear exchange, if needed.
8	Cleanup	Decon NCOIC ensures the MOPP gear exchange area is cleaned up.
9	Marking and reporting	Decon NCOIC has his team properly mark the decon site and send NBC 5 report forward.

Table 3-34. Unsupported one-lane washdown.		
Steps and Risks	**Equipment**	**Procedure**
Step 1. Button up vehicle/equipment. Performing this step prevents contamination from being washed or splashed into uncontaminated areas. **Risks.** Failure to perform this step may result in contamination being washed *into uncontaminated areas*, subjecting crew and maintenance personnel to hazards.	None	Equipment crew/operators close all access doors, hatches, windows, and other openings before washdown. Put muzzle covers on weapons. Nonessential personnel can dismount and begin MOPP gear exchange. They then act as "buddies" for essential crew/operators. **NOTE:** Ensure that vehicles equipped with over pressurized systems are operating with system on.
Step 2 Washdown vehicle/equipment. Performing this step limits spread of contamination, minimizes hazards, and *enhances weathering* to make detailed equipment decon easier and faster. **Risks.** If you do not do this step, expect casualties from contact hazards. Spreading or transferring the hazard most likely will increase. Weathering of the hazard most likely will be slowed. You will not be able to reduce MOPP level immediately because an after-vehicle washdown check for contamination is not made. (See decon in combat, Chapter 1, for when to unmask for brief periods.)	Use for all forms of contamination: • One PDDE. • Adequate fuel for water heater (if available) and pump unit. • Adequate water supply (about 100 to 150 gallons per vehicle). • Liquid detergent to mix with water (see Appendix J).	**Chemical, biological, and radiological:** Two soldiers from the battalion PDDE crew operates washdown equipment. A third soldier supervises. Soldiers must wear toxicological agent protective (TAP) aprons or wet weather gear worn over MOPP gear to keep MOPP gear from becoming saturated. Soldiers spray hot, soapy water (under pressure) from PDDE onto equipment surfaces. This removes, neutralizes, or *destroys most of the gross* contamination trapped in dirt and mud. Unheated soapy water or plain water may be used, if necessary, but is less effective than hot, soapy water. Start at the *top decks of vehicles* and wash downward.
Step 3. Vehicles move into assembly area.		Exchange chemical suit.

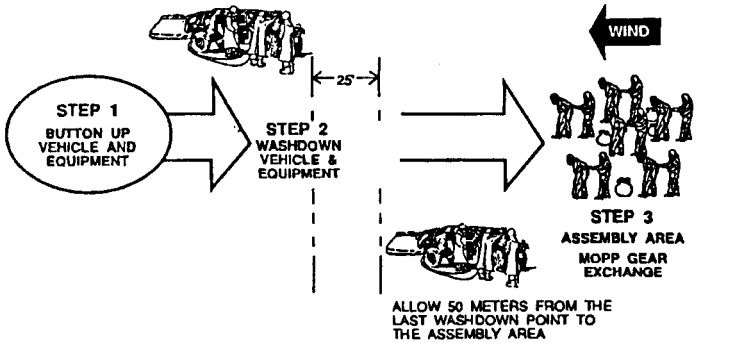

Unsupported one-lane washdown with one lightweight decontaminating system (shown below) and with two lightweight decontaminating systems (above)

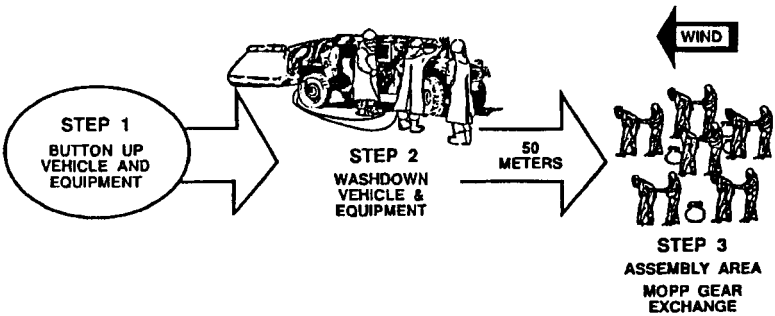

Figure 3-2. Unsupported one-lane washdown.

Table 3-35. Unsupported two lane washdown		
Steps and Risks	Equipment	Procedures
Preaction: Unit tactically disperses in concealed marshalling area. Makes contact with control point for final orders. Control point monitors and supervises rate of movement into lanes to prevent congestion.	Watch	One soldier from the battalion decon crew. Every three minutes two vehicles will be released from the marshalling area. On signal vehicles will proceed to the decon station in their respective lane.
Step 1. Button up vehicle/equipment. Performing this step prevents contamination from being washed or splashed into uncontaminated areas. This step applies for both lanes. **Risks.** Failure to perform this step may result in contamination being washed into uncontaminated areas, subjecting crew and maintenance personnel to hazards.	None	Equipment crew/operators close all access doors, hatches, windows, and other openings before washing down. Put muzzle cover on weapons. Nonessential personnel can dismount and begin MOPP gear exchange upon commander's orders. They they can act as "buddies" for essential crew/operators. **NOTE::** Ensure that vehicles equipped with overpressurized systems are operating with the systems on. No MOPP gear exchange is required if crew/operators are inside vehicle and have not been exposed to any contamination.
Step 2. Wash down vehicles/equipment. Crews/drivers remain in vehicles. Sprayers use cross diagonal technique for two to three minutes, removing gross contamination. This technique avoids water splashing the crew members. Performing this step limits the spread of contamination, minimizes hazard, and enhances weathering to make detailed equipment decon easier and faster.	• Adequate fuel for water heater (if available) and pump unit. • Adequate water supply (about 100 to 150 gallons per vehicle). • Liquid detergent to mix with water (see Appendix F). **NOTE:** Use M12 PDDA, M17 LDS, 65-GPM pump, fire-fighting equipment, and/or combination.	**Chemical, biological, and radiological:** Two soldiers per lane from the battalion decon crew wash down equipment. A third soldier supervises. Soldiers must wear TAP aprons or wet weather gear over MOPP gear to keep MOPP gear from becoming saturated. Soldiers spray hot, soapy water (under pressure) from PDDE onto equipment surfaces. This removes, neutralizes, or destroys most of the gross contamination trapped in dirt and mud. Unheated soapy water or plpain water may be used, if necessary, but is less effective than hot, soapy water. Start at the top decks of vehicles and wash downward.
Step 3. Vehicles move into assembly area. MOPP gear exchange is determined by the commander		Exchange MOPP suit.

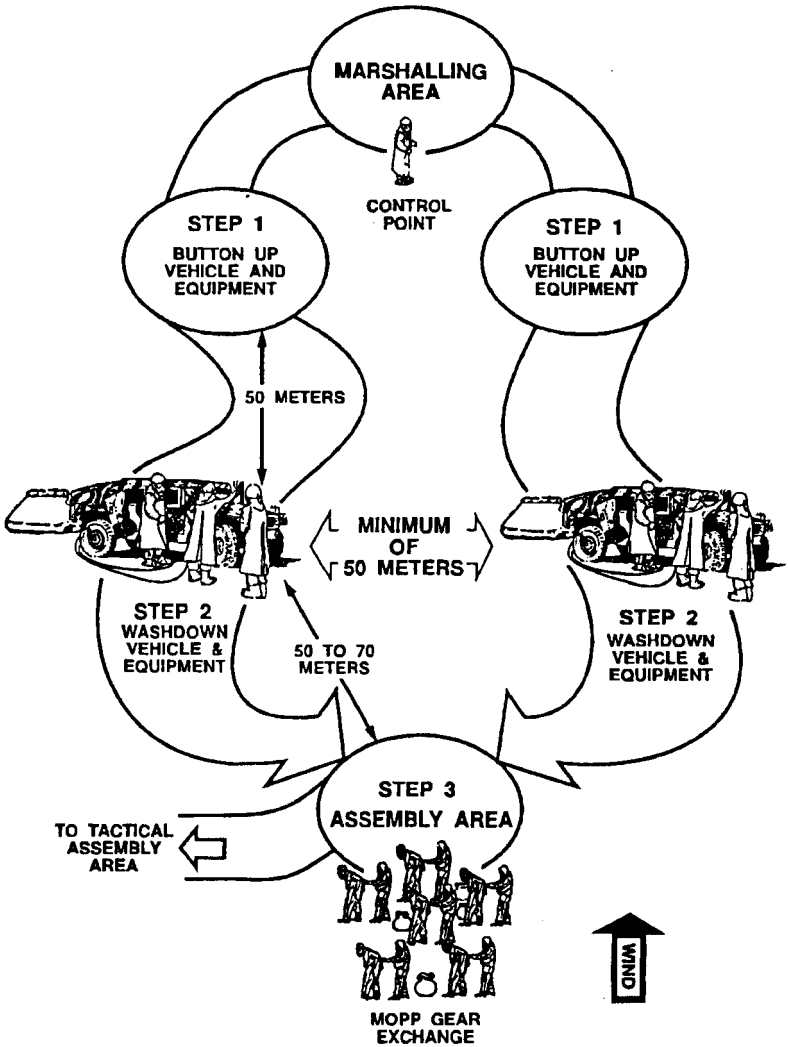

Figure 3-3. Unsupported two lane washdown

Table 3-36. Supported two-lane washdown.		
Steps and Risks	**Equipment**	**Procedures**
Preaction: Unit tactically disperses in a concealed marshalling area. Make contact with control point for final instructions. Control point monitors and supervises rate of movement into lanes to prevent congestion.	Watch	One soldier from the battalion decon crew required. Two vehicles will be released from the marshalling area every three minutes. On signal vehicles will proceed to the decon station in theor respective lane.
Step 1. Button up vehicle/equipment. Performing this step prevents contamination from being washed or splashed into uncontaminated areas. This step applies to both lanes. **Risks.** Failure to perform this step may result in contamination being washed into uncontaminated areas, subjecting crew and maintenance personnel to hazards.	None	Equipment crew/operators close all access doors, hatches, windows, and other openings before washdown. Put muzzle covers on weapons. Nonessential personnel can dismount and begin MOPP gear exchange, upon commander's orders. They then act as "buddies" for essential crew/operators. **NOTE:** Ensure that vehicles equipped with overpressurized systems are operating with systems on.
Step 2. Wash down vehicles/equipment. Crews/drivers remain in vehicles. Vehicles stop by the first wash. Sprayers decon half of the vehicle/equipment facing their side, for one and one-half minutes. Vehicles then move to the second wash where sprayers will decontaminate the other half of the vehicle/equipment for one and one-half minutes.	• 3 M17 LDS. • Adequate fuel for water heater and pump units. • Asequate water supply (approximately 100 to 150 gallons per wash point per vehicle). • Liquid detergents to mix with water. **NOTE:** Use M12 PDDE, M17 LDS, 65-GPM pump, fire-fighting equipment, and/or combination.	Chemical, biological, and radiological: Four soldiers from the chemical decon platoon wash down equipment. A fifth soldier supervises. Soldiers must wear TAP aprons or wet weather gear worn over MOPP gear to keep from becoming saturated. Soldiers spray hot, soapy water (under pessure) from PDDE onto equipment surfaces. Start at the top decks of vehicles and wash downward.
Step 3. Vehicles move into assembly area. MOPP gear exchange is determined by the commander.		Exchange MOPP suit.

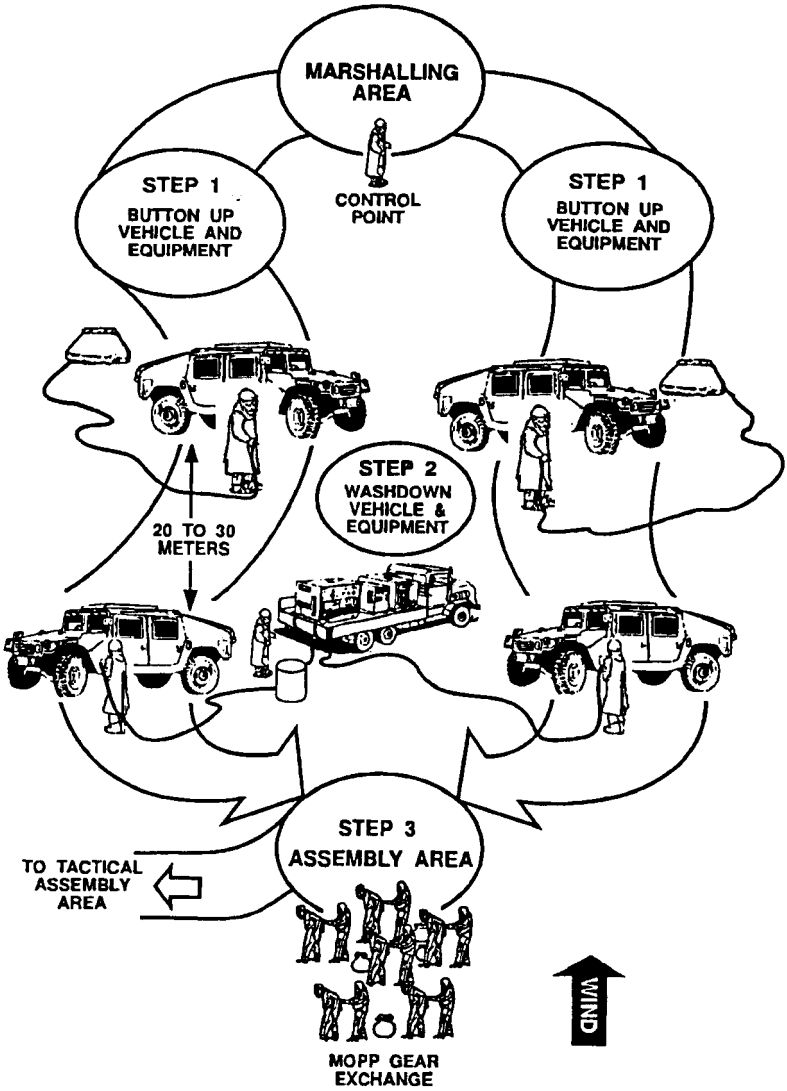

Figure 3-4. Supported two-lane washdown.

MOPP Gear Exchange	
Step	**Procedure**
1.	Decontaminate gear.
2.	*Prepare for Decontamination.*
3.	Decontaminate hood
4.	Remove overgarments and overshoes.
5.	Remove gloves.
6.	Put on overgarments.
7.	Put on overboots and gloves.
8.	Secure hood.

Table 3-37. MOPP gear exchange (buddy team method).

Steps and Risks	Equipment	Procedures
STEP 1 DECON GEAR. Performing this step removes gross contamination from individual gear (weapon, helmet, load-bearing equipment, and mask carrier). **RISKS.** If you do not do this step, you will transfer contamination from your individual gear to your new MOPP gear. You will have to change MOPP gear within 24 hours, even if you do not receive any more contamination. If chemical/biological contamination is not removed from individual gear, the weathering process will be delayed (see FM 3-4). If radiological contamination is not removed, your radiation exposure may increase over time, prolonging the time you must remain in MOPP gear.	ALL CONTAMINATION: • Four long-handled brushes. • Large piece of plastic (poncho or similar material) CHEMICAL/BIOLOGICAL: • One 5-gallon container STB dry mix. RADIOLOGICAL: None.	CHEMICAL/BIOLOGICAL: If the personnel armor system, ground troops (PASGT) helmet is worn, remove and discard the chemical protective helmet cover. Brush or rub STB into personal equipment. Brush or rub STB dry mix onto hose if wearing the M24, M25A1, or M42 mask. Gently shake off any excess. Set aside gear on an uncontaminated surface. RADIOLOGICAL: Shake or brush contamination off.
STEP 2. PREPARE FOR DECON. Performing this step allows the soldier to remove his overgarment trousers and boots later. It also allows for the hood to be rolled easier. **NOTE:** A soldier can do this step by himself or with the help of his buddy.	ALL CONTAMINATION: • Cutting tool.	Unfasten the shoulder straps on the hood and pull them over the shoulder and reattach them to the Velcro ® fastener. Loosen drawcord on hood of protective mask. Remove M9 paper. Untie drawcords on trouser legs of the garment, unzip the trouser legs, and roll a cuff in each leg. Ensure that the cuff does not come over the top of the overboot. Unfasten or cut fasteners on green vinyl overboots or untie/cut the laces on the protective overboot.

Table 3-37. MOPP gear exchange (buddy team method) (Continued).

Steps and Risks	Equipment	Procedures
STEP 3 DECON HOOD. Performing this step removes the gross contamination from the mask and hood. The squad leader and companion or two personnel from the squad stand in the center of a circle. They supervise the other teams while they go through the technique themselves. **RISKS: CHEMICAL/BIOLOGICAL CONTAMINATION.** If this step is not done, small amounts of contamination may still be on the mask and hood. You will risk spreading contamination to your skin during the undressing. **RISKS: RADIOLOGICAL CONTAMINATION.** If you do not do this step, excessive radiation exposure could occur from contaminants on the hood and mask. You also risk spreading contamination to your skin during the undressing.	**CHEMICAL/BIOLOGICAL:** • One M258A1 or two M295 skin decontaminating kits per person. **RADIOLOGICAL:** • Three containers (about 3-gallon capacity) • Two sponges. • Soapy water. • Rinse water. • Paper towels or similar drying material. • One IDK kit per person, if water is not available.	**CHEMICAL/BIOLOGICAL:** Using the M258A1 or M295 skin decon kit, decontaminate the hood and exposed parts of your buddy's mask. Start with the eye lens outserts, wiping from the top down. Then decon the rest of the hood, wiping from the top of the head to the bottom of the hood. When you have finished decontaminating your buddy's mask, decontaminate your gloves in preparation for rollong your buddy's hood. (NOTE: When decontaminating the mask, do not press so hard that you break your buddy's seal). Leave the zipper on the hood closed. Grab the straps where they connect to the back of the hood and lift the hood straight up of the buddy's shoulders. Pull the hood up and over the head until the bottom of the back of the hood is to the top of the eye lens outserts, but not over. Check for contamination on the underside of the hood edges and decon if necessary. Roll your buddy's hood. Put one tuck (about two inches) on the forehead, then begin rolling at both temples simultaneously by tucking in with the thumbs as you roll toward the bottom of the zipper. **M40 MASK.** The contaminated soldier holds the mask firmly in place to avoid breaking the seal. Make the rolls from each side of the hood come to a point at the bottom of the zipper, forming a V. Put a half twist in the V, forming two sides into a tail. Then tuck the tails between the upper part of the canister and mask. (Tie tail over and under the hose of the M42.) **(Step 3 continues on next page.)**

Table 3-37. MOPP gear exchange (buddy team method) (Continued).		
Steps and Risks	**Equipment**	**Procedures**
STEP 3. DECON HOOD (continued)		**RADIOLOGICAL:** Wipe your buddy's mask and hood with sponge dipped in hot, soapy water. Rinse with sponge dipped in clean water. Dry with paper towels or rags. The buddy does his or her own gloves. Cool, soapy water is not as effective for removing contamination, but can be used if you scrub longer. Use IDK skin decon kit ONLY if no water is available. If water supply is limited, soldier may use some of his drinking water (from his canteen) with a wet sponge or cloth. Do not reverse rolls. Only your buddy's hood will be decontaminated and rolled at this time.
STEP 4. REMOVE OVERGARMENTS/OVERSHOES. Performing this step limits the spread of agents and helps prevent agents from penetrating through to skin or undergarments. **RISKS:** If you do not do this step, the agent will penetrate your overgarment. The more agent on the garment, the quicker it will penetrate. If you do not do this step properly, you risk spreading the agent onto your undergarments or skin, causing casualties.	ALL CONTAMINATION: • Two discard containers (recommend plastic bags.)	**CHEMICAL/BIOLOGICAL:** Unfasten the three snaps on the back of overgarment trousers. Do this by grasping the outside overgarment jacket and unsnapping the snaps individually. Untie the drawcord at the bottom of the jacket. Unfasten the Velcro® at the wrist and unfasten. Unfasten the Velcro® closures over the zippered front of the jacket and unzip the jacket. Grasp the jacket at the shoulders. Instruct the buddy to make a fist. Pull the jacket down and away from the soldier, ensuring that the black part of the jacket isn't touched. Lay the overgarment jacket on the ground , black side up. (It will be used for the buddy to stand on later.) Carefully unfasten and unzip the trousers. Do not loosen the waist tabs. Instruct the soldier to break the seals on the overshoes by alternately stepping on the heels and pulling up his foot. Grasp the trousers and pull them down to the knees. Instruct the soldier to walk out of the trousers/GVOs, (Step 4 continues on next page.)

Table 3-37. MOPP gear exchange (buddy team method) (Continued).

Steps and Risks	Equipment	Procedures
STEP 4. REMOVE OVERGARMENTS/OVERSHOES (continued).		taking care not to step on the contaminated side of the overgarment. If wearing overboots, remove trousers first, then step out of overboots (with buddy's help) onto the black side of jacket. The soldier should step onto the jacket wearing mask, battledress uniform (BDUs), and gloves.
STEP 5. REMOVE GLOVES. Performing this step removes contaminated gloves and limits the spread of contamination. RISKS: If this step is not done, it is quite probable the agent will be transferred to clean overgarments (Step 6). Contamination may get on your skin because gloves, tear, rip, puncture, and wear out.	ALL CONTAMINATION: • Two discard containers (from Step 4)	Hold finger tips of the gloves and partially slide the hand out. When fingers of both hands are free, hold arms away from body and let gloves drop off.
STEP 6. PUT ON OVERGARMENTS. Performing this step restores MOPP protection. RISKS: If you do not do this step properly, you risk contaminating your new overgarment or your skin.	ALL CONTAMINATION: • One set of chemical protective overgarments per person (correct size).	Open package containing new overgarments, but do not touch the garment. Have your buddy reach into the package and pull out the overgarment without touching the outside of the package. Your buddy puts on the trousers and jacket, fastens overgarment, and leaves trouser legs open. Do not reverse roles. Only your buddy will put on clean overgarments at this time.
STEP 7. PUT ON OVERBOOTS AND GLOVES. Performing this step restores MOPP protection. RISKS: If you do not do this step, you run the risk of becoming a casualty by touching contamination remaining on unit equipment. You risk spreading contamination to your skin or undergarments. You risk contaminating your regular combat boots.	ALL CONTAMINATION: • One set of chemical protective overboots per person. • One set chemical protective gloves per person (correct size). • M9 paper.	Pick up a package of clean overboots and open without touching the overboots inside. Have your buddy reach into the package (without touching outside of package), remove the GVO/overboots, put them on, and fasten trouser legs. Open a package of clean gloves without touching gloves. Have your buddy remove them from package (without touching the outside of the package) and put them on. Put on M9 paper. Do not reverse roles. Only your buddy will put on clean overgarments at this time. Table 3-37 continued on next page.

Table 3-37. MOPP gear exchange (buddy team method) (Continued).

Steps and Risks	Equipment	Procedures
STEP 8. SECURE HOOD. Performing this step restores MOPP protection. **RISKS:** If you do not do this step, you risk tranferring contamination to the inside of the hood.	ALL CONTAMINATION: • One decon 1 and one decon 2 wipe packet fromM2581 kit. • One M295 SDK decon packet.	Decontaminate your rubber gloves with M258A1 or M295 skin decon kit. Once gloves are decontaminated, unroll your buddy's hood and attach the straps and tighten neck cord. Check all zippers and ties on the hood and overgarment to ensure they are tight.

Thorough Decon

Table 3-38. Thorough decon support matrix.

	UNIT								
	DIVISION CMLO	DIVISION	BRIGADE	DISCOM	FSB	CHEMICAL UNIT	CONTAMINATED UNIT	BATTALION	SITUATION DEPENDENT
Preparation Phase Tasks									
Request	S						P	S	
Coordination	S		S					P	
Site Selection		S or S				P			
Advance Party Link-up						S	P	S	
Site-Setup				S	S	P	S		
Execution Phase Tasks									
Site Control/Security						S	P		
Predeocn Actions						P	S		
Processing						P	S		
Site Clearance Phase Tasks									
Cleanup						P	P		S
Marking & Reporting						P			S

P = Primary Responsibility, S = Supporting Responsibility

Table 3-39. Equipment recapitulation for detailed troop decon of an average-sized company.	
Three containers (2-gallon capacity). One will hold an immersion heater.	Two books of M8 paper per squad.
Three containers (3-gallon capacity). Four additional containers required for radiological decon.	One role of M9 paper per squad.
Two M258A1 or M291 decon kits per person.	Four M1 chemical agent monitors (CAMs).
Two boxes of plastic bags.	Four M8A1 automatic chemical agent alarms.
Ten 50-pound drums of STB.	Two immersion heaters with fuel.
One 5-pound drum of general purpose detergent.	Two shovels.
One 1-gallon container of mask sanitizing solution per ten tanks.	First aid supplies and antidotes.
Four long-handled brushes.	One M256A1 detector kit per squad.
Four large sponges (four additional sponges for radiological decon).	One role plastic per company.
Four bundles of rags.	One case paper towels per company.
Four cutting tools (scissors, knives).	Engineer tape.
One filter-pair or filter canister per mask.	Protective mask PLL parts.
One hood per mask.	**NOTE:** If only one radiacmeter is available, use it at Station 5 to monitor personnel. Pile together decontaminated equipment from Station 1 and decontaminate masks from Station 7. After a squad has been monitored through Station 5, an attendant should monitor the equipment pile.
Three AN/PDR27 radiacmeters or AN/VDR2 (for radiological only).	

Table 3-40. Detailed Troop Decon personnel and equipment recapitulation.

Station	Personnel	Equipment
Station1 *Individual Gear Decon*	2 attendants 1 *monitor* (CAM operator)	3 30-gallon containers 2 long-handled brushes 2 ponchos or plastic sheets 1 CAM 8 M8 detector paper 4 M256A1 kits 100 trash bags
Station2 Overboot and Hood Decon	1 attendant	2 cutting tools 60 M258A1 or M295 (or one per person) 2 ponchos or plastic tarps 100 trash bags
Station 3 Overgarment Removal	1 attendant	10 M258A1/M295 2 30-gallon containers 100 trash bags
Station 4 Overboot and Glove Removal	1 attendant	2 30-gallon containers 100 trash bags Engineer tape Cutting tool
Station 5 *Monitor*	1 attendant (CAM operator) 1 aidman (or combat lifesaver)	1 CAM 5 M8 detector paper 24 M258A1/M295
Station 6 Mask Removal	2 attendants	1 M8A1 chemical alarm
Station 7 Mask Decon Point	2 attendants 1 monitor	4 3-gallon containers 1 CAM 2 sponges 1 case paper towels 1 immersion heater w/container Mask sanitizing solution
Station 8 Reissue Point	Unit supply NCO Unit NBC NCO	Mask PLL

Table 3-41. Planning Factors for DS2 application.			
Planning Catagory	**Tank**	**Truck**	**APC**
Gallons of DS2	15	8	7
Minutes to apply	35	29	18
CAUTION **Do not mix HTH or STB with DS2. If mixed, a violent reaction will occur.**			

Table 3-42. Preparation of decon mixtures.		
Decon Mixtures		
Solution	**1 Gallon of Water**	**5 Gallons of Water**
5 percent	.6 pounds STB/HTH	3.6 pounds STB.HTH
10 percent	.75 pounds STB/HTH	4.5 pounds STB/HTH

Table 3-43. Planning factors for the rinse station.			
Planning Catagory	**Tank**	**Truck**	**APC**
M12A1 Rinse (gal)	325	158	152
M12A1 Rinse (min)	12	7	9
M17 LDS (gal)*	57	42	31
M17 LDS (min)*	14	11	10
* With Spray Wands			

Table 3-44. Common interferences that can cause false positive readings on the CAM.

Interferent	G-Bar Response	H-Bar response
M258A1 Decon Kit		High
M280 DKIE		High
DS2	Low	
Insect Repellent	Low-Very High	
Brake Fluid	High-Very High	Very High
Cleaner, General Purpose	High	
Burnig Kerosene		High
Breath Mints	High	
Gasoline Vapor	Low	Low
Burning Grass	Low-High	Low
Burning Gas	Low	
Green Smoke	Low	Low-High
Breakfree Oil	Low	
Ammonia	Very High	

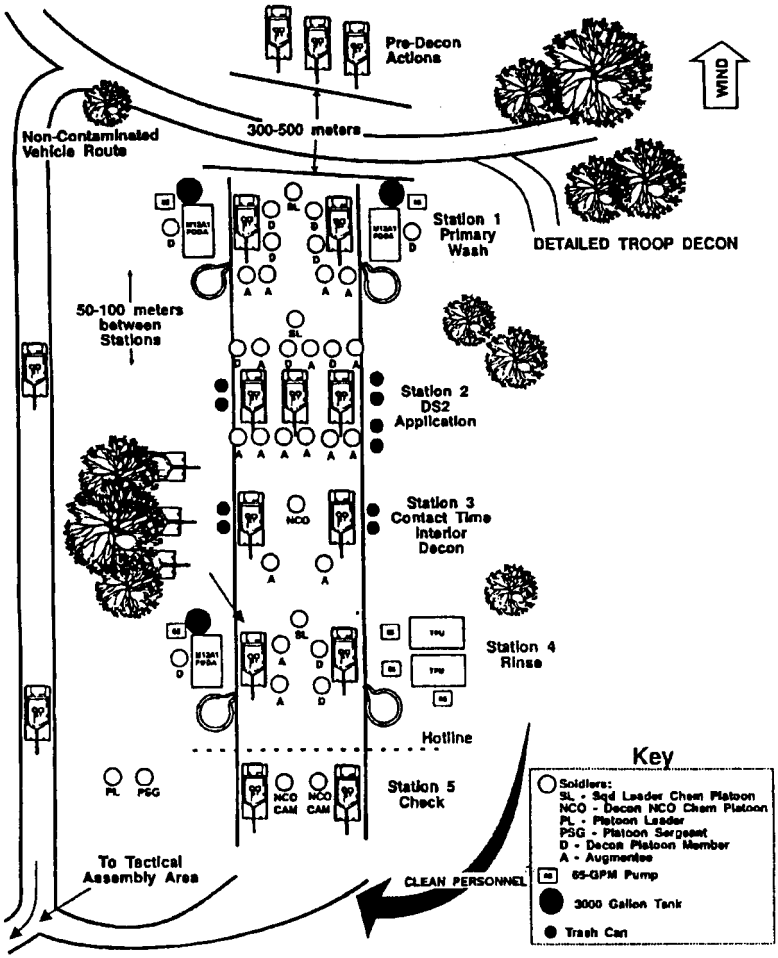

Figure 3-5. M12A1 PDDA-equipped unit-optimum DED layout.

Table 3-45. Personnel and equipment requirements for optimum M12A1 PDDA-equipped DED setup (see figure 3-5).

	Personnel		Equipment
	Decon Platoon	Augmentee	
Station1 Initial Wash	1 Squad Leader 2 PDDA Operators 4 Sprayers	4 Scrubbers	2 M12A1 PDDAs 2 3,000-gal Tanks 2 65-GPM Pumps 6 Long-Handled Brushes 8 TAP Aprons Liquid Detergent
Station 2 DS2 Application	1 Squad Leader 3 Appliers	9 Appliers	18 Long-Handled Brushes 9 MOps with Extra Mop Heads 3 30-gal Containers 9 M13 DAPs Sufficient DS2
Station 3 Wail/Interior Decon	1 NCO	2 Interior Decon Assistants	2 AN/VDR2 or AN/PDR27 () 3 TAP Aprons 6 30-gal Containers 10 M8 Detector Paper 30 Sponges 8 M256A1 50 Trash Bags 1 Clipboard w/Pen 1 Stopwatch
Station 4 Rinse	1 Squad Leader 1 PDDA Operator 2 Pump Operators	2 Sprayers	1 M12A1 PDDA 1 3,000 gal Tank 3 65 GPM Pumps 2 TPU 2 TAP Aprons
Station 5 Check	2 NCO/CAM Operatiors		2 CAM 10 M256A1 20 M8 Detector Paper 2 AN/VDR2 or AN/PDR27 2 M8A1 Chem Alarms
C2	! Platoon Leader 1 Platoon Sergeant		1 HUMMWV/CUCV w/Radio 3 NBC Marking Kits
Total Personnel	20	17	

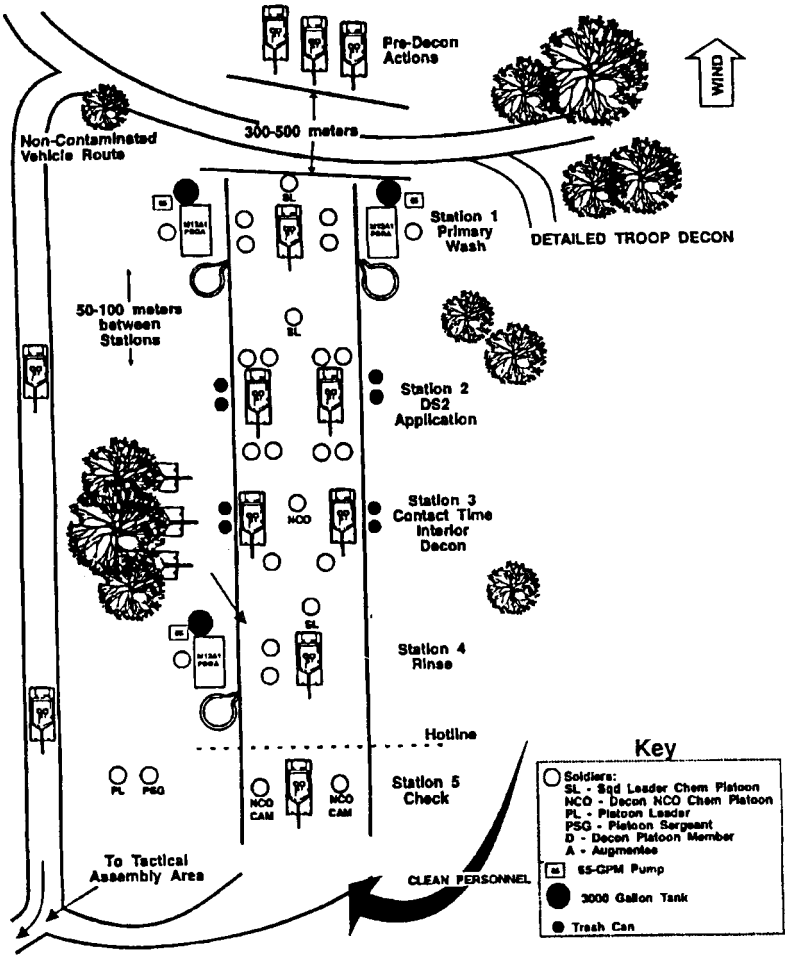

Figure 3-6. An Alternate DED layout for an M12A1 PDDA-equipped unit.

Table 3-46. Personnel and equipment requirements for an alternate M12A1 PDDA-equipped DED setup (see figure 3-6).

	Personnel	Equipment
Station 1 Initial Wash	1 NCOIC* 2 PDDA Operators* 4 Sprayers 2 Scrubbers	2 M12A1 PDDAs 2 3,000-Gallon Tanks 2 65-GAL Pumps 4 Long-Handled Brushes 6 TAP Aprons Liquid Detergent
Station 2 DS2 Application	1 NCOIC* 8 Appliers	14 Long-Handled Brushes 8 Mops with Extra Mop Heads 3 30-Gallon Containers 8 M13 DAPs Sufficient DS2
Station 3 Wait/Interior Decon	1 NCO* 2 Interior Decon Assistants	2 AN/VDR2 or AN/PDR27 3 TAP Aprons 6 30-Gallon Containers 10 M8 Detector paper 30 Sponges 8 M256A1 50 trash Bags 1 Clipboard w/Pen 1 Stopwatch
Station 4 Rinse	1 NCOIC* 1 PDDA Operator* 2 Sprayers	1 M12A1 PDDA 1 3,000-Gallon Tank 1 65-GPM Pump 1 TPU 2 TAP Aprons
Station 5 Check	2 NCO/CAM Operators*	2 CAMs 10 M256A1 20 M8 Detector Paper 2 AN/VDR2 or AN/PDR27 2 M8A1 Chem Alarms
C2	1 Platoon (Decon Platoon) 1 Platoon Sergeant (Decon Platoon)	1 HUMMWV/CUCV w/Radio 3 NBC Marking Kits
Total Personnel	29 (Minimum of 11 soldiers from the decon platoon)	

* These individuals should be from the decon platoon

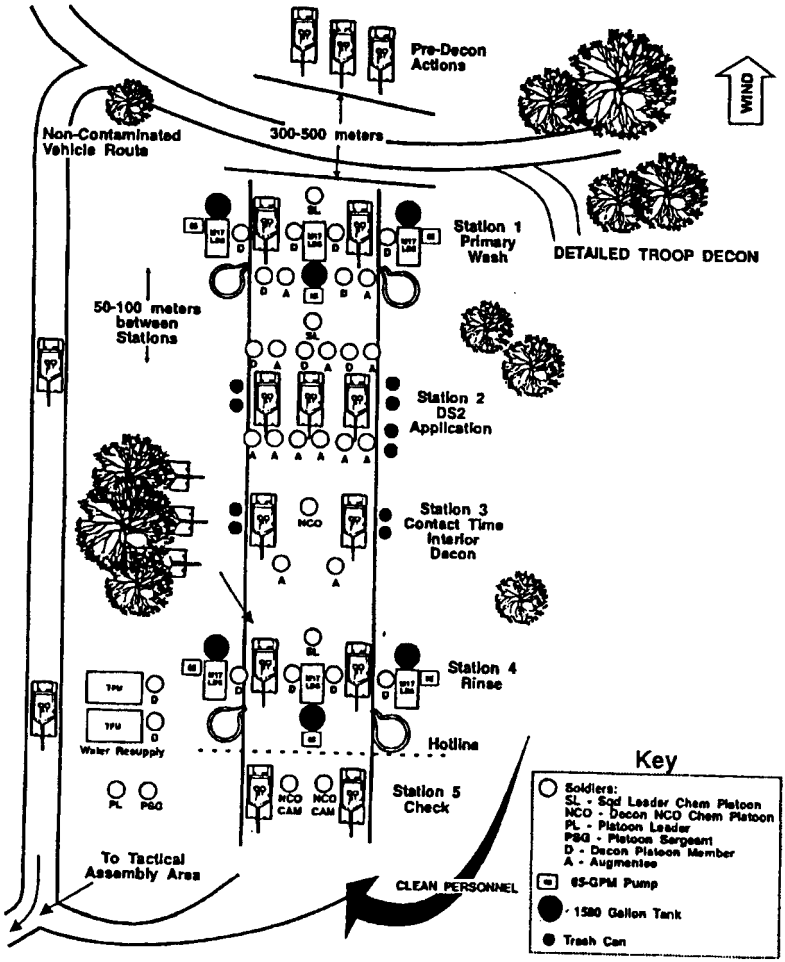

Figure 3-7. Optimum DED layout for an M17 LDS-equipped unit.

Table 3-47. Personnel and equipment optimum requirements for optimum M17 LDS DED setup (see figure 3-7).

	Personnel		Equipment
	Decon Platoon	Augmentee	
Station 1 Initial Wash	1 Squad Leader 4 Sprayers 2 Scrubbers	2 Scrubbers	3 M17 LDS 3 1,500-gal Tanks 3 65-GPM Pumps 6 Long-Handled Brushes 8 TAP Aprons Liquid Detergent
Station 2 DS2 Application	1 Squad Leader 3 Appliers	9 Appliers	18 Long-Handled Brushes 9 MOps with Extra Mop Heads 3 30-gal Containers 9 M13 DAPs Sufficient DS2
Station 3 Wail/Interior Decon	1 NCO 2 Interior Decon Assistants		2 AN/VDR2 or AN/PDR27 3 TAP Aprons 6 30-gal Containers 10 M8 Detector Paper 30 Sponges 8 M256A1 50 Trash Bags 1 Clipboard w/Pen 1 Stopwatch
Station 4 Rinse	1 Squad Leader 4 Sprayers		3 M17 LDS 3 1,500 gal Tank 3 65 GPM Pumps 4 TAP Aprons
Station 5 Check	2 NCO/CAM Operatiors		2 CAM 10 M256A1 20 M8 Detector Paper 2 AN/VDR2 or AN/PDR27 2 M8A1 Chem Alarms
C2	! Platoon Leader 1 Platoon Sergeant		1 HUMMWV/CUCV w/Radio 3 NBC Marking Kits
Total Personnel	24	11	

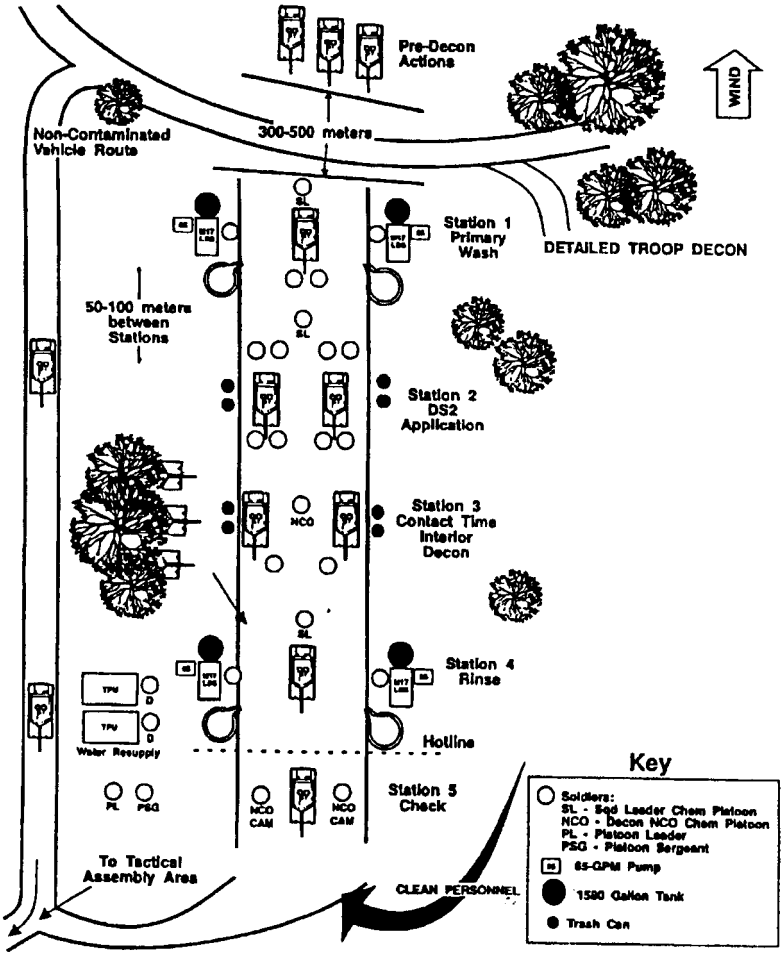

Figure 3-8. An Alternate DED layout for an M17 LDS-equipped unit.

Table 3-48. Personnel and equipment requirements for alternate M17 LDS DED setup (see figure 3-8).

	Personnel	Equipment
Station 1 Initial Wash	1 NCOIC* 4 Sprayers 4 Scrubbers	3 M17 LDS 3 1,500-Gallon Tanks 3 65-GAL Pumps 4 Long-Handled Brushes 8 TAP Aprons Liquid Detergent
Station 2 DS2 Application	1 NCOIC* 8 Appliers	14 Long-Handled Brushes 8 Mops with Extra Mop Heads 3 30-Gallon Containers 8 M13 DAPs Sufficient DS2
Station 3 Wait/Interior Decon	1 NCO* 2 Interior Decon Assistants	2 AN/VDR2 or AN/PDR27 3 TAP Aprons 6 30-Gallon Containers 10 M8 Detector paper 30 Sponges 8 M256A1 50 trash Bags 1 Clipboard w/Pen 1 Stopwatch
Station 4 Rinse	1 NCOIC* 4 Sprayers	2 M17 LDS 2 1,500-Gallon Tank 2 65-GPM Pump 4 TAP Aprons
Station 5 Check	2 NCO/CAM Operators*	2 CAMs 10 M256A1 20 M8 Detector Paper 2 AN/VDR2 or AN/PDR27 2 M8A1 Chem Alarms
C2	1 Platoon (Smoke/Decon Platoon) 1 Platoon Sergeant (Smoke/Decon Platoon)	1 HUMMWV/CUCV w/Radio 3 NBC Marking Kits
Water Resupply	2 Drivers*	2 TPUs
Total Personnel	32 (Minimum of 10 soldiers from the smoke/decon platoon)	

* These individuals should be from the decon platoon

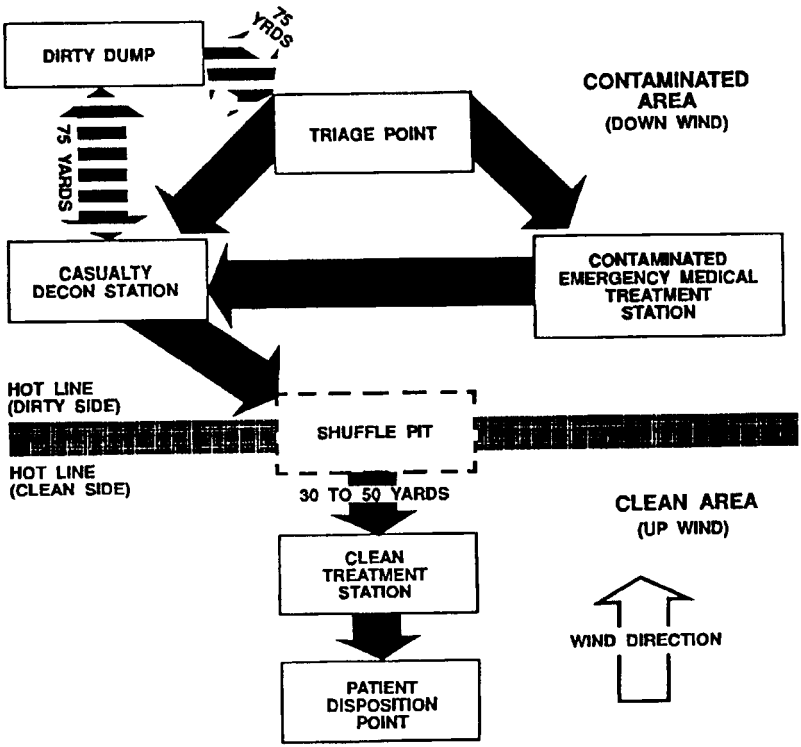

Figure 3-9. Layout for a patient decontamination station and a clean treatment area without Collective Protection Shelter (CPS).

Chemical Patient Decontamination Procedures

Step 1. Decontaminate the patient's mask end hood.

Step 2. Remove gross contamination from the patient's overgarment.

Step 3. Remove patient's protective overgarment and personal effects.

Step 4. Remove patient's battledress uniform.

Step 5. Transfer the patient to a decon litter.

Step 6. Decontaminate skin (M291/M258A1 kit or 0.5% chlorine solution).

Step 7. Transfer the patient across the shuffle pit.

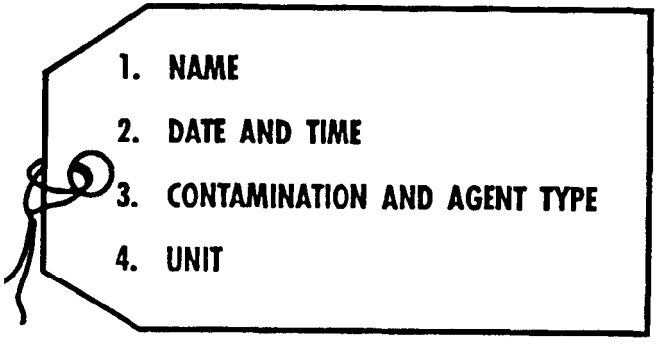

Figure 3-10. Field expedient NBC casualty tag.

Table 3-49. Standard Decontaminants.

Decontaminant	Chemical	Biological	Nuclear
DS2	X	X	
STB	X	X	
Mask sanitizing solution	X	X	
Soap and detergents	X	X	X

Table 3-50. Natural Decontaminants.

Decontaminant	Chemical	Biological	Nuclear
Weathering	X	X	X
Absorbents (earth, sawdust, ashes, rags)	X		
Sealants (concrete, asphalt, earth, paint)	X	X	X
Water	X	X	X
Steam	X	X	X
Fire	X	X	

Table 3-51. Average DS2 and Water Usage for Thorough Decon.

Vehicle	DS2 Req (gal)	Water Req (gal)	
		M17	M12A1
Tank	8.5	57	215
Truck	4.9	42	157
APC	3.8	31	151

Ref: Tech Report DPG/JOD-91/017 dated 26 Aug 91.
NOTE: Sump requirements calculations for the sump at each station are:
Total gallons x 0.00495 = cubic yards
Cubic yards x 1.5 = size hold to dig

Table 3-52. Nonstandard Decontaminants.

Decontaminant	Chemical	Biological	Nuclear
Oxidizing agents (potassium permanganate, potassium or sodium dichromate, nitric acid, or aqua regia			X
Complexing (chelating) agents (citric acid, tartaric acid, sodium tartrate), kerosene, segesterene, sodium citrate, oxalic acid, sodium oxalate, or orthophosphoric acid			X
Iodine water purification tablets		X	
Disinfectant, chlorine, food service		X	
Formalin (formaldehyde)		X	
Peracetic acid (PAA)		X	
Ethylene oxide		X	
Carboxide		X	
Hyamine (benzathonium chloride)		X	
Sodium hypochlorite solution (household bleach)	X	X	
Calcium hypochlorite (HTH) [high-test bleach (HTB), or high-test hypochlorite]*	X	X	
2-Propanone (acetone)	X		
Diethyl ether	X		
Ethylene glycol	X		
Solvents (gasoline, JP4, diesel fuel, kerosene)	X		
Sodium hydroxide (caustic soda or lye)	X	X	
Sodium carbonate (washing soda, soda ash, sal soda, or laundry soda)	X		
Potassium hydroxide (caustic potash)	X	X	
Hexachloramelamine	X		
Ammonia or ammonium hydroxide (household ammonia)	X		
Perchloroethylene (tetrachloroethylene)	X		
Dichloramine-B and Dichloramine-T	X		
Acids (sulfuric acid, hydrochloric acid, acetic acid, or oxalic acid)			X

*A 5 percent solution hypochlorite solution is an effective decon solution against most chemical and biological agents. This solution can be used effectively for skin decon provided it is followed by a soap-and-water wash. Calcium hypochlorite is in the Army supply system.

Decontamination of Specific Items

The following table lists more than two dozen specific surfaces or materials, and it explains briefly how to best decontaminate each for chemical, biological, and nuclear contamination. The best method for decon of a particular surface or material in a given situation could be any of those listed for that surface or material.

The order in which the methods are listed does not indicate preference of one over another. You should choose the beat method for decon of a particular item. For a more in-depth understanding of the decon methods, refer to FM 3-5.

Table 3-53. Decontamination of Specific Items.

Surface or Material	Type of Contamination		
	Chemical	Biological	Nuclear
Asphalt: Roads (Applicable to small vital areas only)	• Flush with water. • Spray with slurry from PDDE. • Cover with STB; when liquid contamination is visible and personnel are nearby, use dry mix. • Weather. • Cover small areas or paths across roads with 10 cm (4 inches) of earth.	• Weather. (Remain masked.) • Wet with water (will help prevent secondary aerosols, but does not decon). • Apply 2% household bleach solution. • Spray with slurry from PDDE. • Pour, spray, or spread oil on surface (will help prevent secondary aerosol, but does not decon).	• Brush or sweep. • Flush with water (this may drive some of the contamination into the surface; waste must be controlled). • Vacuum cleaning.
Roofs	Same as for asphalt roads.	• Same as for asphalt roads. • Apply detrochlorite (leave on at least 30 minutes, then flush with water.)	Same as for asphalt roads.
Brick & Stone: Roads (Applicable to small vital areas only)	• Weather. • Spray with slurry from PDDE or apply with brushes and brooms. Let remain 24 hours, then flush with water. • Wash with soapy water, preferably hot. • Cover small areas or paths across roads with 10 cm (4 inches) of earth.	Same as for asphalt roads.	• Same as for asphalt roads. • Abrasion (sand blasting). This provides direct and complete removal of contaminated dust; however, sand and equipment being used becomes contaminated.
Buildings	• Spray with slurry from PDDE or apply with brushes and brooms. Let remain 24 hours, then flush with water. • Use STB or dry mix around build ings where waste water runs. • Wash with soapy water, preferably hot. • Weather.	• Same as for asphalt roads. • Apply STB slurry to vertical surfaces by manual means or PDDE. Slurry may be left on exteriors..	Same as for brick and stone roads.
Concrete: Roads (Applicable to small vital areas only)	• Spray with slurry from PDDE. • Cover with STB or dry mix. • Weather. • Cover small areas or paths across roads with 10 cm (4 inches) of earth.	Same as for asphalt roads.	Same as for brick and stone roads.
Buildings, bunkers, gun emplace-ments, tank obstacles	Same as for brick and stone buildings.	Same as for brick and stone buildings.	Same as for brick and stone buildings.

continued

Table 3-53. Decontamination of Specific Items (continued).

Surface or Material	Type of Contamination		
	Chemical	Biological	Nuclear
Earth: Roads (Applicable to small vital areas only), gun emplacements, bivouac areas, pathways, bomb craters	• Spray with slurry from PDDE. • Cover with STB; when liquid contamination is visible and personnel are nearby, use dry mix. • Weather. • Burn (may present downwind vapor hazard). • Cover small areas or paths across roads with 10 cm (4 inches) of earth. • Scrap layer of contaminated earth to side or road.	• Same as for asphalt roads • Burn.	• Earthmoving (removal). Contaminated dust should be controlled. Equipment may become contaminated. Waste disposal must be considered. • Sealing (with earth). No waste disposal problem; however, equipment may become contaminated.
Fabrics: Canvas, covers, tarpaulins, tentage, mask carriers, web gear, clothing	Cotton • Immerse in boiling soapy water for 1 hr (1 lb soap to 10 gal water; stir. • Use 5% solution of sodium carbonate for G agents. • Immerse in boiling water for 1 hr. • Launder by standard methods. • Use slurry. • Weather (except for V agents). Woolen (DS2 not recommended) Immerse in warm (100°F, soapy water for 1 hr or longer with light agitation; dry items slowly (fabric may shrink))	Cotton • boil in water for 15 minutes. • Autoclave for 45 minutes at 123°C (253°F). • Immerse in 2% household bleach solution for 30 minutes, rinse immediately. • Launder (destroys or inactivates all but highly resistant spores). Woolen (DS2 not recommended). Launder (fabric may shrink).	Cotton and Woolen (DS2 not recommended for wollen). • Brushing (removes contaminated dust, but presents dust hazard top personnel). • Laundering (most practical procedure; waste must be controlled; fabric may shrink).
Leather: Boots, gloves, and other items	• scrub with hot, soapy water and rinse. • Immerse in soapy water at 120°F for 4 hrs and rinse. • Use 5% sodium carbonate solution for G agents. • Air.	• Immerse in 2% household bleach solution. Rinse. • Immerse in 2% peracetic acid for 10 minutes, rinse, and air for 10 to 50 minutes. • Wipe with 2% peracetic acid, remove excess, and air 10 to 15 minutes.	• Brushing • Flushing with water or soapy water.
Glass: Windows	• Dépon kit, individual equipment. • M258A1 or M280 kit. • DS2. • Wash with hot, soapy water. • Wash with clear water or organic solvent. • Blot off surface. • Air. • Weather	• M258A1 or M280 kit. • Wash with soap and water. • Wipe with disinfectant solution or 2% peracetic acid (see similar procedures below for mess gear).	• M258A1 or M280 kit. • Wash with detergent. • Flush with water. • Wipe with solvents.
Lenses	• M258A1 or M280 kit. • Same as for windows (DS2 may damage lens coatings). • Decon kit, individual equipment.	• M258A1 or M280 kit. • Wipe with soap and water. • Wipe with alcohol or household bleach.	• M258A1 or M280 kit. • Brush or wipe (care must be exercised to prevent scratching of lens). • Use compressed air to blow contamination from surface.
Grass and Low Vegetation: Fields, open terrain	• Burn. • Spray with slurry from PDDE. • Cover with STB or dry mix. • Explode drums of STB. • Clear paths through area by use of detonating cord or other detonating devices.	• Burn. • Same as for asphalt roads.	Same as for earth.

continued

Table 3-53. Decontamination of Specific Items (continued).

Surface or Material	Type of Contamination		
	Chemical	Biological	Nuclear
Metals (unpainted): Ammunition	• Wipe with soapy water. • Wipe with organic solvent and dry. • Air	• Wipe with soapy water. • Wipe with 2% household bleach solution. • Air.	• Brush or wipe.
Machinery	• Use DS2. • Same as for ammunition.	• Use DS2. • Wipe with 2% peracetic acid, rinse, and air for 10 to 15 minutes.	• Brush or wipe. • Wash with detergent. • Flush with water.
Mess gear and canned rations	• Immerse in boiling, soapy water for 30 minutes and rinse. • Immerse in boiling water for 30 minutes. • Spray with DS2. • Wash in hot, soapy water, rinse, and air.	• Wash with soap and water, then immerse in disinfectant solution (disinfectant, chlorine, food service, or 1/3 canteen cup of household bleach per 10 gal water). • Boil in water 15 minutes. (Not effective on toxins and bacterial spores.) Immerse in 5% sodium carbonate (4 lb washing soda to 10 gallons water), rinse with potable water. • Immerse in household bleach solution (1/2 gal bleach to 25 gal water) for 30 minutes, then rinse and air for 10 to 15 minutes. • Immerse in HTH solution (1/2 lb to 25 gal water) 30 minutes, then rinse. • Immerse in STB solution (1 lb to 25 gal water) for 30 minutes, then rinse. • Immerse in 2% peracetic acid for 10 minutes, rinse, and air for 10 to 15 minutes.	• Wash with soap and water, rinse. • Brush, wipe contamination from surfaces and containers.
Metals (painted): Vehicles, weapons, equipment	• DS2 (may soften paint). • Wash with hot, soapy water and rinse. • Spray with slurry from PDDE, remove from surface in 1 hour and oil surface. • Weather. • Air. • M291 kit may be used for individual weapon decon. • M280 (DKIE) decon kit, individual equipment.	• Wash with detergent and high-pressure water stream. • Apply detrochlorite. Leave on 30 minutes, then remove by washing with a stream of water. • Steam clean, using detergent. • Use household bleach solution. • Use 2% peracetic acid.	• Brush or wipe. • Wash. • Use organic solvents, caustics (not on aluminum or magnesium surfaces), complexing agents (of small value on weathered surfaces), or abrasives.
Plastics (opaque): Insulation, telephones, panel boards.	• DS2 (may soften or damage some plastics. • Wash with hot, soapy water and rinse. • Weather. • Air.	Same as for lenses	• Wash with detergents. • Flush with water. • Wipe or brush.
Plastics (transparent): Eyepieces, airplane canopies	• Wash with hot, soapy water and rinse. • Weather. • Air. • Blot off surface.	Same as for lenses.	Same as for plastics (opaque).
continued			

Table 3-53. Decontamination of Specific Items (continued).

Surface or Material	Type of Contamination		
	Chemical	Biological	Nuclear
Rubber (impermeable): Aprons, suits, and other items	• Spray with DS2 and rinse after 30 minutes. • Immerse in hot, soapy water (just below boiling point) for 1 hour; do not agitate. Rinse with clear water and hang up to dry. • For G agents, use 10% sodium carbonate solution, rinse, and air. • Apply hot, soapy water with brushes and rinse. • Spray with slurry from PDDE. • After a few minutes, wash off with clear water.	Same as for leather.	• Brushing. • Scrubbing or flushing with water or soapy water.
Rubber (natural and synthetic): Gloves, boots	• Spray with 10% mixture of HTH and rinse. • Immerse in slurry solution for 4 hours, rinse, and air. • Use the M291 kit in emergencies. • AIR.	Same as for leather.	Same as for impermeable rubber.
Mask facepieces and other rubber articles coming in direct contact with the skin.	• USE the M291 kit in emergencies. • Wash with warm, soapy water. • Use decon kit, individual equipment, M280.	• Wash in warm, soapy water; rinse in clear water, and dry at room temperature • Wipe with 2% peracetic acid; wipe off excess immediately, and air 10 to 15 minutes.	• Wipe or brush off. • Wipe off with water and detergent (avoid wetting mask filters).
Tires, hoses, mats, insulation.	• Spray with 10% mixture of HTH and rinse. • Apply slurry paste. Allow slurry to remain at least 30 minutes, then flush with clear water (may be left on tires). • Apply hot soapy water. • Air. • Weather.	Use same methods used for chemical decon.	Same as for impermeable rubber.
Sand (Applicable to small vital areas only): Beaches, deserts.	• Flush with water. • Spread STB or spray slurry over surface. • Weather. • Cover paths with roofing paper. • Scrape off 5 to 10 cm (2 to 4 inches) of contaminated top layer.	• Burn. • Wet with water (will help prevent secondary aerosols, but does not decon). • Apply 2% household bleach solution. • Apply slurry of 7 parts STB and 93 parts water (by weight). • Apply sodium hydroxide.	Same as for earth.
Undergrowth and tall grass: Meadows, jungles, forests (Applicable to small vital areas only)	• Burn (downwind vapor hazard). • Spray slurry from PDDE. • Weather. • Explode drums of STB. • Clear paths with detonating cord, bangalore torpedoes, or demolition snakes.	• Burn. • Same as for sand.	To extent possible, use same procedures as for earth.
Wood (unpainted): Buildings, vehicle bodies, boxes, crates, and similar items	• Apply slurry with PDDE, brooms, or swabs. Let slurry remain 12 to 24 hours; flush and repeat application, then flush again. • Scrub with hot, soapy water and rinse. • Weather.	• Apply detrochlorite. Leave on at least 30 minutes; flush with water. • Apply STB slurry to vertical surfaces. Slurry may be left on interiors. • Weather (sun and rain eliminate most microorganisms within one day). • Burn.	• Planning. • Wash exterior with large amounts of water (some contamination may soak into surfaces.

continued

Table 3-53. Decontamination of Specific Items (continued).

Surface or Material	Type of Contamination		
	Chemical	Biological	Nuclear
Wood (painted surface): (DS2 may soften paint). Buildings, boxes	• Apply slurry with PDDE, brooms, or swabs. Let slurry remain 12 to 24 hours, then rinse off with water. • Scrub with hot water and rinse. Use DS2 and rinse. • Weather.	Same as for wood buildings and boxes as previously indicated .	• Wash exterior with large amounts of water. • Wipe contamination from surface.
Water	Decon of water should only be undertaken by trained water purification personnel.	• Boil small amounts 15 minutes. • Chlorinate using chlorination kit. • Add iodine water purification tablets to small amounts of water.	• Flocculation (requires special chemicals to remove suspended matter in water). • Ion exchange (removes radioions from solution).
Food: Not canned or protected by impermeable container	Food known or suspected to be contaminated with chemical agents should not be consumed until approved by veterinary personnel.	• Boil in water 15 minutes. Cook thoroughly. • Immerse in or spray with 2% household bleach solution. (Packaged food or food which is peeled or pared may be immersed or sprayed.)	Wash or trim contamination from unpackaged food.
Food: Canned, bottled, or protected by impermeable container	See mess gear and canned rations.	See mess gear and canned rations.	See mess gear and canned rations.
Personnel	• Use M291 kit on exposed skin known or suspected to be contaminated; decon kit, individual equipment, M280. • Bathe with soap and water if readily available.	• Bath with soap and hot water; decon kit individual equipment, M280. • Use the M291 kit.	• Brush or wipe from skin and hair. • Bathe with soap and hot water.

Chapter 4

Nuclear Protection

There are three types of radiation:
ALPHA — Travels only a few centimeters, internal hazard only.
BETA — Travels a few meters in air, limited penetrating power, external and internal hazard.
GAMMA — Travels speed of light, cannot be totally shielded.

Actions Before an Attack:

The best defense against a nuclear attack is to dig in. Unit defensive positions, which vary from soldier's foxholes to improved defensive positions, should be prepared whenever the tactical situation permits.

Foxholes: A deep, round foxhole with overhead cover offers the best protection from blast, thermal radiation, initial nuclear radiation, and fallout.

Field shelters: Well-constructed fighting positions and bunkers provide excellent protection against all the effects of a nuclear detonation.

Tunnels, caves, culverts, and storm drains provide good shelter.

Armored personnel earners, infantry fighting vehicles, and tanks (in a hull-down defilade) give excellent protection.

Weapons, individual equipment, clothing, and other items should be secured in their foxholes. Supplies, explosives, and flammables should be dispersed and protected or shielded. If left unsecured, these may become lethal weapons from the blast wave.

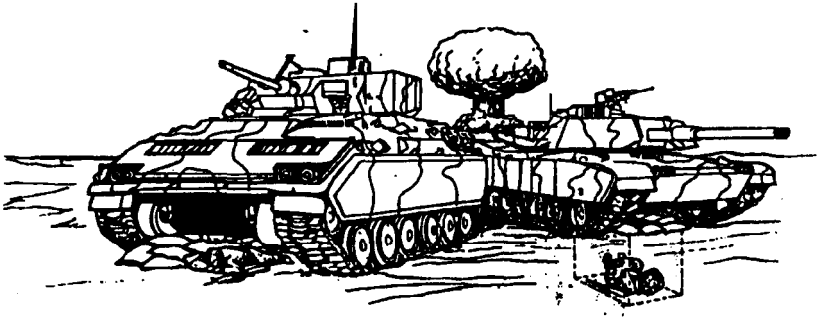

Figure 4-1. Tracked vehicle as expedient overhead cover.

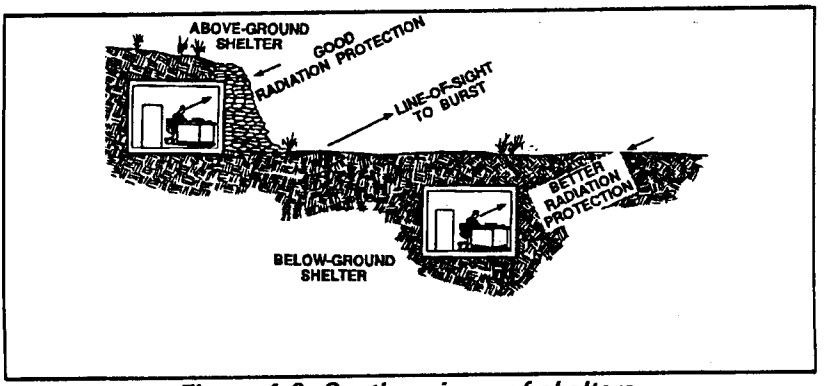

Figure 4-2. Section views of shelters.

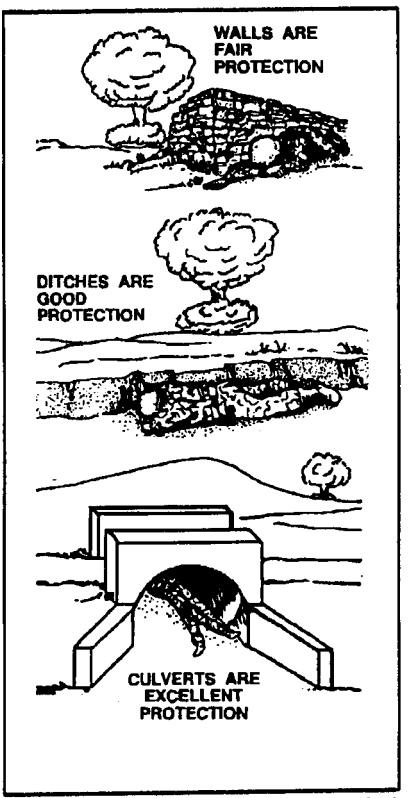

Figure 4-3. Expedient cover against blast and thermal effects.

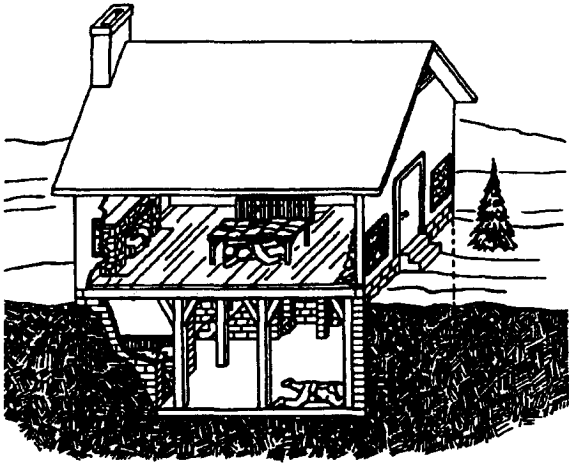

Figure 4-4. Shelter in a building.

Table 4-1. Shielding values of earth cover for a 2,400-centigray free-in-air dose.

Soldier in	Radiation Protection Factor	Resultant Dose cGy
Open	one	2,400
Open foxhole, 4' deep	8	300
Same with 6" earth cover	12	200
Same with 12" earth cover	24	100
Same with 18" earth cover	48	50
Same with 24" earth cover	96	25

Table 4-2. Radiation protection factors of sand-or clay-filled sandbags.

Soldier In	Radiation Protection Factor	Resultant Dose cGy
Open	None	2,400
Open foxhole, 4' deep	8	300
Same with 1 layer (4 inches)	16	150
Same with 2 layers (8 inches)	32	75
Same with 3 layers (12 inches)	64	38

Table 4-3. Comparison of blast casualties from a 10-kiloton fission weapon.

Range (meters)	200	300	400	700	800	900	1,000	1,400
Personnel in open (percentage)	100	80	41	11	8	5	4	0
Personnel in wheeled vehicle (percentage)	10	100	100	99	80	62	43	1

Actions During an Attack

- Immediately drop face down.
- Close eyes.
- Protect exposed skin.
- Wait until blast wave passes and debris stops falling.
- Stay calm, check for injury.
- Check weapons and equipment.
- Prepare to continue the mission.

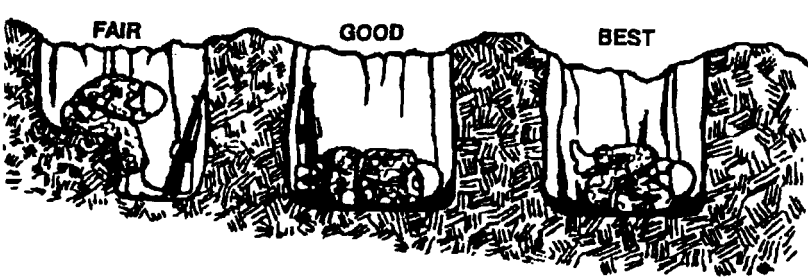

Figure 4-5. Recommended body positions in a foxhole.

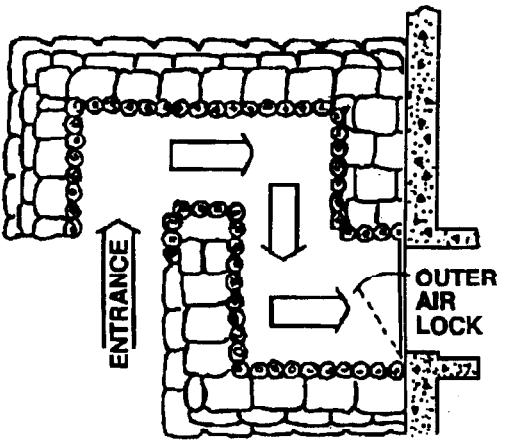

Figure 4-6. Protection from blast flow into shelters.

Actions After an Attack

- Begin continuous monitoring.
- Organize survivors.
- Secure and organize equipment.
- Cover mouth with handkerchief.
- Assist casualties.
- Send NBC 1 report.
- Improve protection against possible fallout.
- Conduct damage assessment and restoration of combat power.

Simplified Fallout Prediction (M5A2)

1. Information required: NBC 2 nuclear report and effective downwind message (EDM).

2. Record date-time of burst, GZ, and wind direction on M5A2.

3. Determine Zone I from the nomogram printed on the M5A2, draw arc on M5A2,

and label.

4. Zone II = 2 x Zone I; draw an arc, and label.

5. Draw tangents from cloud radius to end of Zone I.

6. Darken the perimeter.

7. Draw time-of-arrival arcs and label.

8. Orient azimuth on predictor with grid north.

Significance of Predicted Fallout Zones

Exposed, unprotected personnel may receive the following doses from fallout:
Zone I— Immediate operational concern. More than 150 centigray (cGy) within 4 hours.
Zone II— Secondary hazard. Less than 150 cGy within 4 hours. More than 50 cGy within 24 hours.
Outside the predicted area— No more than 50 cGy in 24 hours. No more than 150 cGy for an indefinite period.

Detailed Fallout Prediction (Unit Level)

1. Obtain a valid NBC 3 report.

2. Determine scale at which the prediction will be drawn (must be the same as the map on which it will be displayed.)

3. On overlay paper, mark GZ.

With Line YANKEE (from NBC 3 report):

4. Mark grid north.

5. Extend radial lines at their proper azimuths from GZ (from line YANKEE).

6. Using GZ as center, draw Zone I arc (from line ZULU) between radial lines.

7. Using GZ as center, draw Zone II arc (2 x Zone I) between radial lines.

8. Using GZ as center, draw circle with radius equal to the cloud radius (from line ZULU).

9. Draw two tangent lines from the GZ circle to the points of intersection of the two radial lines with the Zone I arc.

10. Using GZ as center, draw dashed time-of-arrival arcs (from line ZULU). No arcs are drawn beyond the end of Zone II.

11. Label zones, times of arrival.

12. Add marginal information:
    a. Strike serial number (from line ALFA).
    b. Date-time of attack (from line DELTA).
    c. GZ coordinates (from line FOXTROT).
    d. Scale.

Without Line YANKEE:

4. Using GZ as center, draw Zone I circle (the only 3 digits on line ZULU).

5. Using GZ as center, draw Zone II circle (2 x Zone I).

6. Label zones and GZ.

7. Add marginal information:
    a. Strike serial number (from line ALFA).
    b. Date-time of attack (from line DELTA).
    c. GZ coordinates (from line FOXTROT).
    d. Scale.

NOTE: If you need more detailed information on fallout prediction, see FM 3-3-1. Figure 4-6. Four parts of completing a fallout prediction.

Marginal Information

- Map designation
- Grid reference data
- Nuclear burst ground zero identification
- H-hour
- Reference time
- Decay rate (exponent)
- Time of preparation
- Validity time
- Source of contamination (fallout, neutron-induced, or radiological agents)
- Dose rate information

Radiological Monitoring

Periodic monitoring (readings at least once every hour) is done when–
- Intelligence indicates a threat of nuclear war.
- Nuclear war has been initiated or NBC threat status (nuclear) is Serial 3.
- Continuous monitoring falls below 1 centigray per hour (cGyph).

Continuous monitoring is done when—
- A nuclear detonation is seen, heard, or reported.
- Periodic monitoring records 1 cGyph or higher.
- Ordered by the unit commander.
- A warning of expected contamination (NBC 3) is received.

Automatic NBC 4 reports are—
- Initial report.
- Peak report.
- Special reports--send when a condition exists that warrants the commander's attention—for example, when the commander's operational exposure guidance (OEG) is exceeded.

Additional directed reports are—
- Series reports.
- Summary reports.
- Verification reports.

Radiological Survey Briefing

1. Situation: Enemy and contamination situation

2. Mission: Who, what, when, where, and why

3. Execution:
   (a) Concept of operation
   (b) Assignments
   (c) Coordinating instructions:
      (1) Time of departure
      (2) Primary and alternate routes
      (3) Coordination required
      (4) OEG, turn-back dose (D_{tb}), turn-back dose rate (R_{tb}
      (5) Actions on reaching D_{tb} or R_{tb}
      (6) Areas requiring marking
      (7) Debriefing - when, where, by whom

4. Service Support: Forms, equipment, POL, decontamination, and so forth

5. Command Signal:
   a. Command. Location of control party
   b. Signal:
      (1) Reporting requirements
      (2) SOI
      (3) Codes and call signs
      (4) Primary and alternate communication means

Aerial Radiological Survey Briefing

Control party briefing includes—

- Time of departure.
- Course legs and routes.
- Tentative height.
- Coordination required.
- OEG.
- Actions on reaching D_{tb} or R_{tb}.
- Debriefing: when, where, by whom.
- Height of aircraft (150 meters AGL [above ground level] maximum, 60 meters AGL optimal).
- Ground speed (53 knots [98 kmph] maximum; slower is more accurate).
- Establishment procedures for the air-ground correlation factor (AGCF).
- Time interval between readings (500 meters maximum).

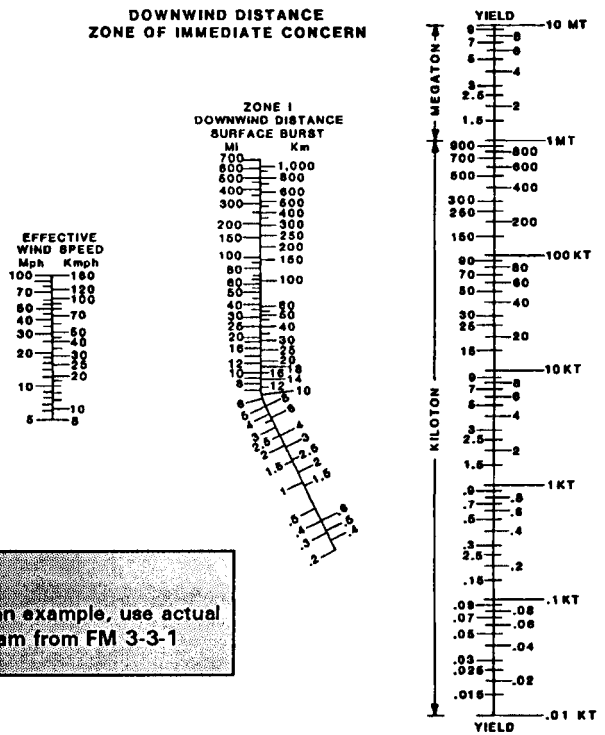

NOTE:
This is an example, use actual nomogram from FM 3-3-1

Figure 4-7. Downwind distance of Zone I (km).

To use the above table to find the downwind distance of Zone I, enter the left-hand column with the yield as indicated on line NOVEMBER of the NBC 2 nuclear report. Read across the top to locate the nearest wind speed (always round UP to safe-side). Where the two columns intersect is the Zone I distance Distances are in kilometers.

$$\text{Time of arrival (TARR)} = \frac{\textit{Distance From GZ (KM)}}{\textit{Effective Wind Speed (kmph)}}$$

$$\text{Transmission factor} = \frac{\textit{Indise Dose or Dose Rate (ID)}}{\textit{Outside Dose or Dose Rate (OD)}}$$

Inside dose or dose rate = Outside dose or dose rate x transmission factor

$$\text{Outside dose or dose rate} = \frac{\textit{Inside Dose or Dose Rate}}{\textit{Transmission Factor}}$$

Radiological Calculations*
(For use with pocket calculator)

Decay

Kaufman Equation: $R_1 = R_t \times t_n$ $R_t = R_1/t_n$ $t = \frac{R_1}{t_n}$

R_1 = Dose rate measured at H + 1.
R_t = Dose rate measured at time (t) after burst (other than H + 1)
t = Time that Rt was measured (in H +m- hours after burst).
n = Decay exponent (use 1.2 if unknown).

Total Dose**

Use if $T_e \leq H + 25$: $D = (R_1/1\text{-}n)\ (T_x 1\text{-}n - T_e 1\text{-}n)$
Use if $T_e > H + 25$: $D = R_{Te} X\ T_s$
D = Total dose.
T_x = Time of exit from area (in H + number of hours after burst).
T_e = Time of entry into area (in H + number of hours after burst).
T_s = Time of stay in area (hours).

Decay Rate of Fallout (n)

$n = \text{Log}\ (R_a/R_b)\ /\ \text{Log}\ (T_b/T_a)$
R_a = Dose rate measured at time a (T_a) (after peak dose rate).
R_b = Dose rate measured at time b (T_b) (last dose rate).
T_a = time (in H + number of hours after burst) that R_a was measured.
T_b = time (in H + number of hours after burst) that R_b was measured.

* For neutron induced radiological calculations, use nomograms in FM 3-3-1.
** When decay constant n = 1, use 1.000001 for the above equation.

Validity Time for Decay Rate (T_p)

$T_p = 3\ (T_b - T_a) + T_b$

T_a = Time (in H + number of hours after burst) that R_a was measured.
T_b = Time (in H + number of hours after burst) that R_b was measured.

Table 4-4. Normalizing Factors (NFs)
(Correlation to H + 1 Hour)

TIME AFTER BURST	DECAY EXPONENT (n)							
	0.600	0.800	1.000	1.200	1.400	1.600	1.800	2.000
10 min	0.341	0.238	0.167	0.116	0.081	0.057	0.040	0.028
20 min	0.517	0.415	0.333	0.268	0.215	0.172	0.138	0.111
30 min	0.660	0.574	0.500	0.435	0.379	0.330	0.287	0.250
40 min	0.784	0.723	0.667	0.615	0.567	0.523	0.482	0.444
50 min	0.896	0.864	0.833	0.803	0.775	0.747	0.720	0.694
1 hr 0 min	1.000	1.000	1.000	1.000	1.000	1.000	1.000	1.000
1 hr 10 min	1.090	1.130	1.160	1.200	1.240	1.280	1.320	1.360
1 hr 20 min	1.180	1.250	1.330	1.410	1.490	1.580	1.670	1.770
1 hr 30 min	1.270	1.380	1.500	1.620	1.760	1.910	2.070	2.250
1 hr 40 min	1.350	1.500	1.660	1.840	2.040	2.260	2.500	2.770
1 hr 50 min	1.430	1.620	1.830	2.070	2.330	2.630	2.970	3.360
2 hr 0 min	1.510	1.740	2.000	2.290	2.630	3.030	3.480	4.000
2 hr 15 min	1.620	1.910	2.250	2.640	3.110	3.660	4.300	5.060
2 hr 30 min	1.730	2.080	2.500	3.000	3.600	4.330	5.200	6.250
2 hr 45 min	1.830	2.240	2.750	3.360	4.120	5.040	6.170	7.560
3 hr 0 min	1.930	2.400	3.000	3.730	4.650	5.800	7.220	9.000
3 hr 15 min	2.020	2.560	3.250	4.110	5.200	6.590	8.340	10.560
3 hr 30 min	2.120	2.720	3.500	4.490	5.770	7.420	9.530	12.250
3 hr 45 min	2.210	2.870	3.750	4.880	6.360	8.280	10.790	14.060
4 hr 0 min	2.290	3.030	4.000	5.270	6.960	9.190	12.120	16.000
4 hr 20 min	2.410	3.230	4.330	5.810	7.790	10.440	14.000	18.770
4 hr 40 min	2.520	3.420	4.660	6.350	8.640	11.760	16.000	21.770
5 hr 0 min	2.620	3.620	5.000	6.890	9.510	13.130	18.110	25.000
5 hr 20 min	2.730	3.810	5.330	7.450	10.410	14.560	20.350	28.440
5 hr 40 min	2.830	4.000	5.660	8.010	11.340	16.040	22.690	32.110
6 hr 0 min	2.930	4.190	6.000	8.580	12.280	17.580	25.150	36.000
6 hr 20 min	3.020	4.370	6.330	9.160	13.250	19.170	27.720	40.110
6 hr 40 min	3.120	4.560	6.660	9.740	14.230	20.800	30.410	44.440
7 hr 0 min	3.210	4.740	7.000	10.330	15.240	22.490	33.200	49.000
7 hr 20 min	3.300	4.920	7.330	10.920	16.270	24.230	36.100	53.770
7 hr 40 min	3.390	5.100	7.660	11.520	17.310	26.020	39.110	58.770
8 hr 0 min	3.480	5.270	8.000	12.120	18.370	27.850	42.220	64.000
9 hr 0 min	3.730	5.800	9.000	13.960	21.670	33.630	52.190	81.000
10 hr 0 min	3.980	6.310	10.000	15.840	25.110	39.810	63.090	100.000
11 hr 0 min	4.210	6.800	11.000	17.760	28.700	46.360	74.900	121.000
12 hr 0 min	4.440	7.300	12.000	19.720	32.420	53.290	87.600	144.000

1. Use next higher time if time falls in between.
2. Interpolating NF of odd decay rates will be approximations only.

Normalizing Factor Formulas

For H + l: $NF = (T^2)$
or H + 48: $NF = (T^2/48)$
T2 = Elapsed time after burst
n = Decay Exponent
$R_1 = R_t \times NF$

Aerial Survey Calculations

Minimum number of readings $= \dfrac{\textit{leg or route length (km)}}{.5\ km} + 1$

Time between readings (sec) =

$$\frac{\textit{Leg or Route Length (km)} \times 3{,}600\ (sec/hr) \times (\textit{no. readings} - 1)}{\textit{Windspeed of Aircraft (kmph)}}$$

Distance between readings (km) =

$$\frac{\textit{Time Between Readings (sec)} \times \textit{Aerial Aircraft Speed (kmph)}}{3.6\ (sec/hr)}$$

Plotting interval between readings (km) $= \dfrac{\textit{Leg or Route Length (km)}}{\textit{no. Readings} - 1}$

Turn-back dose (D_{tb}) $= \dfrac{OEG}{2}$

Turn-back dose rate (R_{tb}) $= \dfrac{2 \times OEG \times \textit{Speed (kmph)}}{\textit{Distance (km)}}$

Table 4-5. Transmission Factors for Residual Radiation.	
M1 tank	.04
M60 tank	.04
M2 IFV	.2
M3 CFV	.2
M93 NBC Recon (Fox)	.2
M113 APC	.3
M109 SP howitzer	.2
M88 recovery vehicle	.09
M548 cargo vehicle	.7
M577 carrier; command post	.3
M551 Armored Recon Airborne Assault Vehicle	.2
M728 Combat Engineer Vehicle	.04
M9 ACE	.3
Grader	.8
Bulldozer	.5
Scraper	.5
HMWWV	.6
CUCV	.6
2½-ton truck	.6
4- to 7-ton truck	.5
Multistory building	
Top floor	.01
Lower Floor	.1
Frame house	
First floor	.6
Basement	.1
Urban area (in open)	.7*
Woods	.8*
Underground shelter (3-foot earth cover)	.0002
Foxholes	.1

* These factors do not apply to ground survey dose rates.
Note: The above TFs are for planning purposes only. Calculate the actual TF for a given shelter using the following transmission factor formulas.

$$TF = \frac{ID\ (Inside\ Dose\ Rate)}{OD\ (Outside\ Dose\ Rate)} \quad ID = OD \times TF$$

Table 4-6. Correlation Factors for Residual Radiation. *

Shielding	Location of Survey Meter	Correlation Factor
M1 tank (Abrams)*		20.0
M60 tank	Turret, rear top	25.0
	Turret, front	53.0
	VDR2 mount, left of driver intercom box	23.0
M2 IFV (Bradley)	AN/VDR2 mount on hull wall	9.1
M3 CFV	AN/VDR2 mount on hull wall	9.1
M113 APC	AN/VDR2 mount on hull wall by heater	3.6
M109 SP howitzer	Near driver, left side	9.1
	Rear right side	3.5
M88 recovery vehicle	Commander position	3.4
M577 command post Carrier	AN/VDR2 mount above TC's intercom box	6.9
551 armored recon	Near driver, right side	2.5
airborne assault vehicle		4.6
HUMMWV family (M998)	AN/VDR2, by radio mount	1.7
2½-ton truck		1.7
4- to 10-ton truck		2.0
M1008 CUCV Series	AN/VDR2 mount on cab floor	2.0
Multistory building		
Top floor		10.0
Lower floor		2.0
Frame house		
First floor		2.0
Basement		10.0
Underground shelter (3-foot earth cover)		5,000.0
Foxholes		10.0

* These CFs are for planning purposes only. Calculate the actual CF for a given shelter, using the following correlation factor formulas.

$$CF = \frac{OD\ (Outside\ Dose\ Rate)}{ID\ (Inside\ Dose\ Rate)} \quad OD = ID \times CF$$

Table 4-7. AN/VDR2 Attenuation Factor DIP Settings.

	Row G	Row H	Row J
M577	0	4	0
M60 Tank	2	3	0
M1 Tank	2	0	0
M113	0	3	6
M2/M3	0	9	1
M151	0	1	3
M880/M1008	0	2	0
M998	0	1	7

Table 4-8. Dose Criteria for Placing a Unit in a Radiation Exposure Status Category.

Radiation Exposure Status	Numerical Criteria Total Cumulative Dose (cGy)
RES Zero	0 (no exposure)
RES1	> 0 - ≤70
RES2	> 70 - ≤150
RES3	>150

Table 4-9. Nuclear radiation degree-of-risk exposure.

Radiation status category (See A&B)	Total past cumulative dose (cGy) (See C)	Possible exposure criteria for a single operation that will not result in exceeding the dost criteria for the stated degree of risk (cGy) (See D&E)
RES-0 Units	No explosure	Negligible risk: ≤ 50 Moderate risk: ≤ 70 Emergency risk: ≤ 150
RES-1 Units	More than 0, but less than or equal to 70	Negligible risk: ≤ 10 Moderate risk: ≤ 30 Emergency risk: ≤ 110
RES-2 Units	More than 70, but less than or equal to 150	Any further exposure is considered to exceed a negligible or moderate risk. Emergency risk: ≤ 40
RES-3 Units	More than 150	All further exposure will exceed the emergency risk.

NOTES:
A. Radiation status categories are based on previous exposure to radiation.
B. Reclassification of units from one radiation status category to a less serious one is made by the commander, upon advice of the surgeon, after ample observation of actual set of health of exposed personnel.
C. All exposures to radiation are considered total body and simply additive. No allowance is made for body recovery from radiation injury.
D. Risk levels are graduated within each status category to provide more stringent criteria as the total radiation dose accumulated becomes more serious. The exposure criteria given for RES-1 and RES-2 units should be used only when the numerical value of a unit's total past cumulative dose is unknown.
E. Each of the degrees of risk can be applied to radiation hazards resulting from enemy or friendly weapons, or both, and from initial nuclear radiation resulting from planned friendly supporting fire.

Radiation Injury

Immediate Injury but Delayed Effects

Since a radiation injury victim does not show symptoms immediately after exposure, except for nausea and vomiting, these initial symptoms are not reliable by themselves to evaluate casualties or treat patients. Currently, the only available method to quickly estimate the radiation injury to a soldier is with a personnel dosimeter. Without this dosimetry, many days must pass before definitive diagnostic techniques of the secondary radiation exposure symptoms can provide an accurate estimate of radiation injury.

Tolerance:

IM93 ± 10% certified and leak checked
IM147 ± 10% certified and leak checked
DT236 ± 30% or ± 30 cGy, whichever is less, with 95% confidence after 24 hours

Self-aid and Buddy Aid

Key Factor in Nuclear Combat

Nuclear detonations can produce large numbers of blast, bum, and projectile injuries that initially must be managed by individual soldiers trained in critical frost-aid procedures.

Critical Period

The great physical damage to the surrounding area as a result of a nuclear detonation will increase delays in medical assistance and evacuation. Quality self-aid and buddy aid will improve casualty survival rates and conserve medical resources. Prompt stabilization will ensure casualties can better withstand evacuation to appropriate medical treatment facilities.

Radiation Guidance

Radiation guidance is the advice by the medical staff officer to the commander concerning the medical effects of predicted and actual radiation received by a unit. Commanders use medical advice and information to weigh the options of retaining soldiers with radiation injury (with the possibility of increasing lethality) versus entry into the medical support system.

Importance of Fitness and Wellness

The percentage of deaths that will occur from a given exposure is not a constant value, and it is, in fact, changed by many conditions. For healthy soldiers, LD + 50 is estimated to be about 450 cGy if no medical care is provided, if there are no other injuries, and if they are required to perform little physical labor. If, however, soldiers with no other injuries are worked to exhaustion or are in poor general health, LD + 50 is be reduced to approximately 300 cGy. Soldiers in good health, promptly evacuated to a CONUS hospital, and provided extensive medical care are expected to have their LD + 50 increased to 600 cGy. Soldiers' fitness and health are, therefore, critical factors for survival on a nuclear battlefield.

Table 4-10. Effects of radiation exposure on combat personnel.

Dose* Range (cGy)	Initial Symptoms**	Time of Initial Symptoms (approx)	Performance Capability (mid-dose range)	Final Disposition
0 to 70	None to slightincidence of transient headache and nauses, vomiting in up to 5% of personnel in upper part of range	6—12 hours	Combat effective	Duty
71 to 150	Transient mild nausea and vomiting in 5%—30% of personnel, vomiting in up to 5% of personnel in upper part of range.	2—20 hours	Combat effective	Duty. No deaths.
151 to 300	Transient mild to moderate nausea and vomiting in 20%—70% of personnel, mild to moderate fatigue and weakness in 25%—60% of personnel.	2 hours to 2 days	DT: PD from 4 hours until recovery. UT: PD from 6 hours until 1 day. PD: 6 weeks until recovery.	Duty; less than 5% deaths at low end of exposure range; death may occur in 10% of personnel.
301 to 500	Transient moderate nausea and vomiting in 50%—90% of personnel, moderate fatigue in 50%—90% of personnel.	2 hours to 3 days	DT: PD from 3 hours until 2 weeks, for death or recovery. UT: PD from 4 hours to 2 weeks until death or recovery.	Duty at low end of exposure range; less than 10% deaths. At high end of exposure range, death may occur in more than 50% of personnel beginning after 4 weeks.
501 to 800	Moderate to severe nausea and vomiting in 80%—100 of personnel.	Within 1 hour	DT: PD from 2 hours until 3 weeks. CI from 3 weeks until death.	At low end of exposure range death may occur in more than 50% of personnel beginning after 4 weeks. At high end of exposure range 99%, beginning after 3 weeks.

Table 4-10. Effects of radiation exposure on combat personnel (continued)

Dose* Range (cGy)	Initial Symptoms**	Time of Initial Symptoms (approx)	Performance Capability (mid-dose range)	Final Disposition
	Moderate to severe fatigue and weakness in 90%—100% of personnel.	2 hours to 6 weeks	DT: PD from 2 hours to 2 days and 7 days until 4 weeks.	
801 to 1,500	Moderate to severe nausea, vomiting, disorientation, and dizziness in 100% of personnel; moderate fluid loss in 80% of personnel.	45 minutes to 2-1/2 days	DT: PD 1 hour until 6 hours and 1-1/2 days until 1 week. CI: 6 hours until 1-1/2 days and 1 week until death. UT: PD 1-1/2 hours until 8 days. CI: 8 days until death.	1,000 cGy; death in 1 to 3 weeks.

DT = demanding task
UT = undemanding task
PD = performance decrement (25% - 75% of preirradiation performance level)
CI = combat ineffective (< 25% of preirradiation performance level)

* Doses are free-in-air dose values.
** Vomiting and nausea from tension or fear was reported by 20% of US combat troops in a survey of WWII veterans, particularly in the presence of horrible sights and smells. Extreme fatigue and weakness are also common symptoms of combat stress (battle fatigue). Therefore, none of these symptoms alone are a reliable indicator of the amount of radiation exposure a person may have received.
The effects listed in Table 4-10 represent a continuous exposure spectrum broken into dose range segments. When looking at symptoms/performance, the high end of one segment is very close to the low end of the next segment.

Table 4-11. Radii of Vulnerability.

Category	Personnel In—(LL) (Based on governing effect)					Moderate Damage				Severe Damage		
						Wheeled vehicles		Tanks	Towed Arty	Supply depot	Randomly Parked Helicopters	
Yield (KT)	Open	Open Foxholes	APC	Tanks	EARTH Shelter	Exp	Shld				Cargo Trans	Light Observ
0.1	700	600	600	500	300	200	150	100	100	100	400	500
0.5	900	800	800	700	450	300	250	200	200	200	500	800
1	1,200	900	900	800	500	400	350	300	250	250	700	1,100
2	1,700	1,000	1,100	900	600	500	450	400	300	300	850	1,300
3	2,000	1,100	1,200	1,000	700	600	500	500	400	450	1,000	1,600
5	2,500	1,200	1,250	1,100	800	700	600	600	500	500	1,200	1,900
10	3,200	1,300	1,300	1,250	900	800	700	700	600	600	1,500	2,500
15	3,700	1,400	1,400	1,300	850	900	800	800	700	700	1,800	2,800
20	4,000	1,500	1,450	1,400	1,000	1,000	900	900	800	800	1,900	3,400
30	5,000	1,600	1,500	1,500	1,100	1,200	1,100	1,000	900	950	2,200	3,700
40	5,500	1,700	1,600	1,600	1,200	1,400	1,250	1,100	1,000	1,200	2,500	4,100
50	6,000	1,800	1,700	1,700	1,300	1,700	1,500	1,200	1,200	1,400	2,700	4,500
100	8,000	1,900	1,800	1,800	1,400	2,200	1,900	1,300	1,300	1,700	3,200	5,700
200	12,000	2,000	1,900	1,900	1,500	2,500	2,000	1,500	1,500	1,900	3,700	6,200
300	14,000	2,100	1,950	1,950	1,600	3,000	2,100	1,600	1,600	2,000	3,800	7,100

NOTES:
1. Radii listed are distances at which a 5 percent incidence of effect occurs.
2. HOB used is 60W 1/3 meters.
3. To obtain a radius of vulnerability, enter the Yield Column of the nearest listed yield. If exactly halfway between yields, enter with larger yield. Data listed in table above is for training use only. Use the data in FM 101-31-2 (S) whenever possible.
4. All values have been rounded up to the next 10 meters.

CHAPTER 5

Biological Protection

Actions Before An Attack:
- Up-to-date immunizations
- Good hygiene
- Area sanitation
- Physical conditioning

Biological Attack Indicators:
- Mysterious illness (large number of soldiers)
- Large number of insects or unusual insects
- Large number of dead wild and domestic animals
- Artillery shells with less powerful explosions
- Aerial bombs that pop rather than explode
- Mist or or fog sprayed by aircraft

Actions During Suspected Attack:
- Wear protective mask
- Keep clothing buttoned up
- Consider any known biological agent cloud as a chemical attack

Actions After An Attack:
- Send NBC 1 Report
- Identify casualties (from symptoms they exhibit)
- Isolate soldiers with symptoms

Biological Hazard's Prediction

Suspect A Biological Attack When
- There are indications of a chemical attack, but no immediate effects
- A presumed chemical attack has occurred, but the agent has not been identified

Three Types Of Biological Attacks Are:
- Type A Case a—Point-source attack (example aerosol generator, bomb) or an area attack (as in artillery or bomb let attack). This type of attack includes toxins.
- Type A Case b—A spray fine.
- Type B—Large, liquid drop/ground contaminating attack

Biological Calculations

Maximum Downwind Hazard (MDWHD) = 4 X windspeed (kmph) X cloud duration *of greatest effects (Zone I)

✲ ***The cloud duration is a measure of the length of time a biological agent is likely to remain effective end aerosolized in the environment.***

Example of MDWHD Computation:
Time of attack: 0130
BMNT: 0430
Wind direction: 150 grid
Windspeed: 13 kmph
Cloud duration = 5 hrs MDWHD = 4 X 15 X 5 = 300 km
(3 hrs from time of attack to BMNT + 2 = 5 hrs)

Cloud Duration of the Greatest Effects (Zone I)
Daytime (from BMNT to sunset) 8 hours
Nighttime (from sunset to BMNT) # of hours from time of attack to BMNT + 2 (max of 8 hours)
Cloud Arrival Time (CAT) =

$$\text{Time of Attack (TOA)} + \frac{\textit{Distance (km) From Attack Area}}{\textit{Windspeed (kmph)}}$$

Simplified Downwind Hazard Prediction for Biological Agents

Downwind hazard prediction for biological agents is very similar to the procedure for chemical agents. The resulting prediction provides a minimum estimate of the danger zones for biological agents in general. After employment, actual sampling will produce a better indication of areas affected.

Indications of a Biological Attack

The NBCC will issue an NBC 3 chemical report to alert units in the immediate downwind hazard area. The NBC 3 chemical report equates to approximately 50% of Zone I of the simplified biological downwind hazard prediction. This warning will be adequate for the first 1 to 5 hours (depending on wind speed) units in the remainder of Zone I and Zone II of the biological hazard will need to receive NBC 3 biological reports for adequate warning.

The hazard area prediction will be less reliable as the distance and time from the point of attack increases. (If the wind changes, follow the same procedures for recalculation as for chemical hazard prediction.

$$\text{Cloud Exposure Time} = \text{(CET)} = \frac{\textit{Distance (km) From Attack Area}}{3 \times \textit{Windspeed (kmph)}}$$

The NBC 3 chemical report equates to approximately 50 percent of Zone I of the simplified biological downwind hazard prediction. This warning will be adequate for the first 1 to 5 hours (depending on wind speed). Units in the remainder of Zone I and Zone II of the biological hazard will need to receive NBC 3 biological reports for adequate warning.

All attacks during daytime and all toxin attacks must be presumed to have a cloud

duration of the greatest effects of 8 hours. Only for night attack is it necessary to compute this duration.

The 8-hour maximum for cloud duration is based upon agent decay by environmental conditions, particle fall, and cloud dissipation. The actual effectiveness to minimum hazard levels may extend to as much as 32 hours. (Four times the cloud duration of greatest effects.)

Meaning of Zones for Biological Areas

Zone I-More than 20% to 30% casualties.
Zone II—20% to 30% casualties, gradually decreasing to 1% to 3% casualties.
Outside the predicted area—No more than 1 % to 3% casualties.

Table 5-1. Pasquill Stability Classes

Class	Definition
A	Extremely unstable
B	Moderately unstable
C	Slightly unstable
D	Neutral
E	Slightly Stable
F	Moderately Stable

Conditions					
	Daytime		Nighttime		
Surface wind speed m/sec	Strong	Moderate	Slight	Cloudy	Clear
<2	a	A-B	B		
2-3	A-B	B	C	E	F
3-4	B	B-C	C	D	E
4-6	C	C-D	D	D	D
>6	C	D	D	D	D

Type A Case a (Point Source Attack)

1. Derive the location of the attack from NBC 1 chemical report and plot the location on a map or template.

2. Draw a 1-km radius circle around the point of attack.

3. Determine the maximum downwind hazard.

MDWHD = 4 x windspeed (kmph) x cloud duration of greatest effects * (Zone I)
✲ ***The cloud duration is a measure of the length of time a biological agent is likely to remain effective end aerosolized in the environment.***

4. Draw a line from the point of attack along the representative downwind direction, equal in length to the MDWHD.

5. Draw a line perpendicular to the representative wind direction, intersecting the point of the MDWHD.

6. Extend the line along the representative wind direction for a distance twice the radius of the circle around the attack area from GZ, in the direction behind the attack area.

7. From the rear endpoint of the representative wind direction line, draw two lines that intersect this point, are tangent to the attack area circle, and intersect the line of MDWHD.

8. Erase the area bebind the attack area circle. The remaining area constitutes the Zones I and II hazard area. The points shown on the diagram define the hazard area. Indicate these points on line PA of the NBC 3 Report.

9. Divide the MDWHD by 4. Plot this distance along the representative wind direction line. Draw a line perpendicular to the representative wind direction and which intersects both tangent lines at this point. The area within this smaller plot is the Zone I hazard area.

10. Report the two points at which the Zone I hazard line intersects the tangent lines on line ZB of the NBC 3 biological report.

Time of attack: 0330
BMNT: 0530
wind speed: 13 kmph
wind direction: 90 deg grid
MDWHD = 4x13x4=208 km
(2 hours from time of attack to BMNT + 2 hours = 4)

Type A Case a (area attack)

1. Derive the location of the attack from NBC 1 chemical report and plot it on the map.

2. Plot a circle with a radius of 1 km, unless the attack area radius is known to be more than 1 km. If the attack area is known to be greater than 1 km, plot a circle with a radius equal to the radius of the attack area around the center of the attack area. The circle must have a minimum radius of 1 km.

3. All subsequent procedures are exactly as outlined in the Type A, Case a point-source sample.

Time of attack: 2230
BMNT: 0700
wind speed: 15 kmph
wind direction: 60 deg grid
MDWHD=4x15x8=480km
(maximum 8 hours BMNT)

Type A, Case b (linear spray)

1. Derive the location of the attack area from NBC 1 chemical report. (A number of reports may need to be evaluated). Plot the attack area or spray line on the map.

a. Draw a line through the attack area from the start point to the end point.

2. Draw l-km-radius circles around the beginning point and endpoint of the spray line.

3. Determine the MDWHD, as in Case a.

4. From each endpoint of the spray line, draw a line equal in length to the MDWHD along the representative downwind direction.

5. Draw a perpendicular line intersecting the MDWHD point on the representative wind direction line drawn from the attack area endpoint furthest downwind. This is the line of maximum downwind hazard.

6. Extend each representative wind direction line 2 km behind each endpoint of the spray line.

7. Draw a line from each point 2 km behind the endpoints tangent to the outer side of each circle, until it intersects the MDWHD line.

8. Draw a line tangent to the rear of both attack circles. Erase the area behind the attack circles. This figure encompasses the Zone II hazard area. Report the points delineating this area.

9. Divide the MDWHD by 4. Plot this distance from the attack area endpoint furthest downwind on the representative wind direction line. Draw a line perpendicular to this point and which intersects both tangent lines. This smaller figure is the Zone I hazard area. Report the point of intersection with the tangent lines as Zone I on line ZB of the NBC 3 biological reports.

Time of attack: 0930
BMNT: 0700
wind speed: 2 kmph
wind direction: 90 deg grid
spray length: 10 km
MDWHD=4x12x8=384km

Type B (large, liquid drops, ground contaminating attack)

1. Derive the location of the attack area from NBC 1 biological report, and plot it on the map.

2. Draw a circle with a radius equal to the radius of the attack area. This circle should have a minimum radius of 5 km.

3. Report the hazard area as three digits on line PA of the NBC 3 biological report.

Table 5-2. Potential Biological Warfare Agents.

Microorganism	Mode of Transmission	Incubation Period (Days)[2]	Mortality Rate (Percent)2	Vaccine ([3])	Treatment ([4])
Bacteria					
Bacillus Anthracis (Anthrax)	A, D[9], I	1-7	5-1005	+	E[6]
Francisella Tularensis (Tularemia)	A, D[9], I, V	1-10	<30	+ +	E
Yersinia Pestis (Plague)	A, V	2-6	25-1007	+ + +	E[6]
Vibrio Cholerae (Cholera)	I	1-5	15-90	+ + +	E
Corynebacterium Diptheriae (Diptheria)	A, D[9]	2-5	5-12	+ + +	E
Salmonella Typhi (Typhoid Fever)	I	6-21	7-14	+ + +	E
Rickettsiae					
Rickettsia SPP (Spotted fevers group)	V	6-15	10-40	+ + +	E
Rickettsiae (Endemic or flea-borne typhus)	V	6-14	2-5	N	E
Rickettsia (Rocky Mountain spotted fever)	V	3-10	30 (approx)	N	E
Coxiella Burnetii (Q fever)	A, I	14-21	<1	+ +	E

[1] Transmission can be by aerosol-A, direct contact-D, ingestion-I, and/or vector-V.
[2] Incubation periods and mortality rates vary according to a number of factors (such as ability of the host to resist infection, infective dose, portal of entry, and virulence of the microorganism).
[3] + indicates vaccine available but of questionable value; + + indicates vaccine available, but mainly used in high risk individuals; + + + indicates vaccine used extensively; N indicates no vaccine available.
[4] E indicates effective treatment available; N indicates no specific treatment.
[5] The mortality rate is lower when the agent enters through the skin; higher when it enters through the respiratory tract.
[6] Treatment must be initiated in the earliest stage of the pulmonary form to be effective.
[7] The 25 percent represents mortality due to bubonic form; 100 percent represents mortality due to pneumonic form.
[8] Mosquitoes are thought to be the primary vectors, but this has not been proven.
[9] Direct contact refers to being bitten by a rabid animal, which is the usual means of transmission, or coming into contact with a rabid animal.

Table 5-2. Potential Biological Warfare Agents (continued).

Microorganism	Mode of Transmission	Incubation Period (Days)[2]	Mortality Rate (Percent)2	Vaccine ([3])	Treatment ([4])
Viruses					
Eastern Equine Encephalitis (EEE)	V[8]	4-24	60 (Approx)	N	N
Venezuelan Equine Encephalitis (VEE)	V[8]	4-24	<1	+ +	N
Japanese B Encephalitis	V (Mosquito)	5-15	10-80	+ +	N
Russian SpringùSummer Encephalitis (RSSE)	V (Tick)	7-14	3-40	+	N
Yellow Fever	V (Mosquito)	3-6	5-40	+ + +	N
Dengue Fever	V (Mosquito)	4-10	<1	+	N
Pox Virus					
Variloa Virus (Smallpox)	A, D[9]	7-16	10-25	+ + +	N
Hantaan Virus (Hemorrhagic Fever with Renal Syndrome)	A, V				
Phlebovirus (Rift Valley Fever)	V (Mosquito)	4-6	<1	N	N
Nairovirus (Crimean-Congo Hemorrnagil Fever)	V (Tick)	3-7			
Bunyavirus (LA Crosse)	V (Mosquito)				
Phlebovirus(Sandfly)	V (Sand fly)	3-6			

[1] Transmission can be by aerosol-A, direct contact-D, ingestion-I, and/or vector-V.
[2] Incubation periods and mortality rates vary according to a number of factors (such as ability of the host to resist infection, infective dose, portal of entry, and virulence of the microorganism).
[3] + indicates vaccine available but of questionable value; + + indicates vaccine available, but mainly used in high risk individuals; + + + indicates vaccine used extensively; N indicates no vaccine available.
[4] E indicates effective treatment available; N indicates no specific treatment.
[5] The mortality rate is lower when the agent enters through the skin; higher when it enters through the respiratory tract.
[6] Treatment must be initiated in the earliest stage of the pulmonary form to be effective.
[7] The 25 percent represents mortality due to bubonic form; 100 percent represents mortality due to pneumonic form.
[8] Mosquitoes are thought to be the primary vectors, but this has not been proven.
[9] Direct contact refers to being bitten by a rabid animal, which is the usual means of transmission, or coming into contact with a rabid animal.

Table 5-3. Threat Toxins.

Type of Toxin	Means of ID	Symptoms in Man	Effects on Man	Rate of Action	How Normally Disseminated	Protection Required	Decontamination
Mycotoxins	None	Vomiting, eye and skin irritation, dizziness, bloody diarrhea, and blisters.	Can incapacitate or kill, depending on concentration.	Rapid	Dusts, droplets, aerosols, smokes, or covert means	Protective mask and protective clothing	Soap and water, bleach, M258-series kit, STB and DS2
Enterotoxins	None	Severe vomiting and diarrhea, painful cramps, and weakness	Primarily incapacitates, assuming proper first aid is conducted	Same as above	Same as above	Same as above	Same as above
Botulinum Toxin	None	Double vision, weakness, difficulty in speech and swallowing, and respiratory paralysis	Kills	Delayed	Same as above	Same as above	Same as above

CHAPTER 6

Smoke

Smoke in the Offense

Battlefield applications of smoke include—

- Obscuring
- Screening
- Protecting
- Marking

Friendly forces use projected, generated, and self-defense smoke to-

- Mark targets.
- Obscure enemy gunners and surveillance.
- Degrade enemy command, control, and communications.
- Conceal passage of lines, movement to contact, and hasty and deliberate attacks.
- Conceal landing zones (LZs), drop zones (DZs), or pickup zones (PZs). (For friendly LZs, DZs, and PZs the smoke is placed to restrict enemy observation without interfering with friendly operations.)
- Conceal river-crossing operations and reduction of obstacles.
- Conceal logistics operations (for example, fast refuel sites).
- Signal.
- Support deception plans.
- Degrade enemy laser designators, range finders, and weapons.
- Enhance the effectiveness of artillery-delivered minefield by concealing their visual indicators.
- Support MOUT operations.

Smoke in the Defense

In the defense, forces use smoke primarily to increase survivability and counter enemy reconnaissance, surveillance, and target acquisition. Forces use smoke in the defense to—

- Obscure enemy direct-fire gunners and artillery forward observers.
- Disrupt enemy movement and command and control.
- Conceal obstacle emplacement, preparation of battle positions, and movement to alternate positions.
- Conceal reconstitution, holding, and staging areas.
- Conceal MSR activities.
- Signal.
- Mark targets.
- Deceive the enemy as to areas of main effort and battle positions.
- Reduce the effectiveness of enemy directed-energy weapons.

- Enhance air defense by degrading nap-of-earth flight patterns and forcing the enemy to fly higher.
- Silhouette targets.
- Support MOUT operations.

Tactical Countermeasures

- Disperse laterally and in-depth to increase lines-of-sight.
  - Position forward observers outside anticipated coverage.
  - Position laser designators to front or flanks to avoid preplanned smoke.
  - Position visual air defense systems on high ground.
  - Position thermal/MMW air defense systems in smoke.
- Use obstacles to disrupt enemy timing.
  - Use electronic jamming to preclude adjustments of smoke.
  - Use remote sensor systems to track enemy progress.
  - Engage at choke points with indirect or preaimed direct fire.
- Deceive the enemy about unit location.
  - Prepare positions and alternates in friendly smoke.
  - Conduct rigorous counter-reconnaissance.
  - Use decoys.
- Use helicopters to identify and fire through gaps in coverage. Use remote piloted vehicIe (RPV) to look down through smoke.
- Employ scatterable mines in friendly or enemy smoke to slow an attacking enemy.
- When moving in smoke, plan for tighter formations, slower speeds, and easily recognized routes.
- In the defense, prepare and rehearse movement to alternate and subsequent positions. Use range cards, T&E mechanisms, and multiple lines-of-sight for paired weapons. Plan for target hands-off.

Smoke coordination and reconnaissance checklists for smoke unit leaders are outlined on Page 6-5.

Smoke Planning Process

- Each echelon of command plans for smoke employment to support current and future operations.
- Integrate smoke into the overall tactical plan.
- Synchronize smoke use with key events or decision points.
- Base smoke planning on the same factors as the tactical plan—
  - Mission
  - Enemy situation

- Terrain
- Weather
- Troops available
- Time
- Distance

- Mission considerations include—
  - Types of smokes and obscurants available.
  - Unit capabilities.
  - Detailed planning and preparation.
  - Employment techniques.
  - Communications.
  - Intelligence.
  - Whether the unit has successfully operated in smoke previously

- Chemical staffs must coordinate with other staff sections to—
  - Develop estimates that define enemy capabilities and our own courses of action.
  - Analyze smoke targets.
  - Prioritize smoke resources.
  - Recommend courses of action to the commander.

- When the commander approves the staff estimates, the staff prepares orders that combine smoke with combat power.

Situation and Target Development

Targeting begins with the commander's guidance and continues through the development of a prioritized list specifying what targets to attack and when to attack these targets (DECIDE), plus acquiring high-payoff targets (DETECT), and what will defeat these targets (DELIVER).

Intelligence Preparation of the Battlefield

- For smoke planners
  - Evaluation of area of interest and operation.
  - Terrain analysis
  - Weather analysis
  - Threat evaluation
  - Threat integration

Smoke Estimate

- Chemical officer, in coordination with the G3/S3, FSO, and smoke unit commander/platoon leader prepares the smoke estimate.

- Estimate goes to the S2 and targeting officer for inclusion into the target value analysis (TVA) for fire support planning, and to the S3 and chemical staff for smoke

target planning.

Smoke Support Plan Development

- Prepared simultaneously with the smoke estimate.
- Obtain the restated mission/commander's intent.
- Obtain required fire and smoke planning information.
- Recommend smoke support coordinating measures.
- Update status displays.
- Brief smoke support plan to obtain concurrence from commander (or G3/S3 as required by local policy).
- Coordinate fire support plan changes with the commander or S3 and with the FSO.
- Coordinate the smoke support plan with adjacent units.
- Brief smoke unit leader(s) on the smoke annex to the OPORD.

Smoke Support Plan Execution

- Use covered and concealed maneuver techniques.
- Time smoke delivery with decision points, IPB, and human feedback.
- Use unobscured weapons to overwatch.
- Do not let your smoke silhouette your own forces.
- Plan to engage through or around the smoke.
- Plan for enemy countermeasures.
- Plan for additional maneuver time under smoke.
- Verify enemy locations (responsibility of recon).

Smoke Support Plan Execution

The impact of smoke on tactical operations mandates close coordination, control, and planning for contingencies.

- Command/staff supervision are essential to ensure the use of smoke enhances rather than degrades mission success.
- Commanders must control smoke in their areas of operation.
- Smoke unit leader monitors the communications nets for the supported unit and internal nets.

- Plan to minimize friendly force degradation from our use of smoke.

Smoke Mission Coordination Checklist for Smoke Unit Commanders or Leaders

- Grid coordinates of the smoke target area.
- Tactical or operational missions to be supported.
- Visibility criteria required in the smoke target area?
- Type of screening smoke (haze, blanket, or curtain).
- Type of smoke unit support for logistics, security, and fire support available or needed.
- Will weather and terrain influence the mission?
- Anticipated duration of the mission.
- Direction of known or suspected enemy forces.
- Supported units' frequencies, call signs, and brevity codes.
- Signals for starting, stopping, shifting, or continuing the smoke mission.
- Tactical situation in the proposed smoke area of operations concerning enemy contact, obstacles, etcetera.
- Actions taken should the smoke unit make enemy contact.
- Grid coordinates of supported unit TOCs/CPs.
- Challenge/password and code weds.
- Fog oil and fuel (both diesel and gasoline) resupply.
- Maintenance support and recovery provided.
- Projected requirement for Class V.
- What aviation assets will be available to supported and supporting units?
- Where are LZs, and FARPs?

Smoke Recon Checklist for Smoke Unit Leaders

- Locate selectcd target areas.
- Determine supported and subordinate unit positions.
- Designate subordinate unit smoke positions and/or lanes.
- Locate smoke control point(s).
- Designate supply routes, access routes, fuel resupply points, and/or fuel/fog oil

forward prestock points if required.

- Determine local weather and terrain conditions. (While it is important to note local weather conditions at the time of the recon, the unpredictable nature of weather necessitates that the smoke unit leader consider all possibilities when drafting the operations order.)

- Determine security support requirements and internal smoke unit defense measures.

Table 6-1. Smoke Generator Unit Capabilities

Type of Organization	Point Sources	Average Screen Width* Visibility at 50 Meters (Min-Max)	Average Screen Width* Visibility at 50—Meters (Min-Max)
Chemical Company (SG) (Mtr) (M151) M3A4) One Platoon	48 24	1.00 km—3.4 km 0.50 km—1.7 km	2.0 km—6.8 km 1.0 km—3.4 km
Chemical Company (SG) (Mtr) M998) (M3A4) One Platoon	48 24	0.50 km—1.7 km 0.50 km—1.7 km	1.0 km—3.4 km 0.1 km—3.4 km
Chemical Company (SG) (Mtr) M1037) (M157) One Platoon	24 12	0.50 km—1.7 km 0.25 km—.85 km	1.0 km—3.4 km 0.5 km—1.7 km
Chemical Company (Smk/Decon) (M151) M3A4) One Platoon	48 12	1.00 km—3.4 km 0.30 km—.9 km	2.0 km—6.8 km 0.5 km—1.7 km
Chemical Company (Hvy Div/Mech) Smoke Platoon (M1059) (M157)	6	0.20 km—.6 km	0.4 km—1.1 km
Chemical Company (SG) Mech (M1059) (M157) One Platoon	21 7	0.60 km—2 km 0.30 km—.7 km	1.1 km—3.7 km 0.5 km—1.3 km

* Average screen widths are estimates for stationary smoke employment only but may be used as minimums for mobile employment.

Table 6-2. Wind Speed Estimation.		
Observed Conditions	Wind Speed	
	Kmph	MPH
Smoke, vapor from breath, or dust raised by vehicles or personnel rises vertically. No leaf movement.	0-2	0-1
Smoke, vapor from breath, or dust raised by vehicles or personnel moves slightly in direction of wind. Leaves move slightly and intermittently.	3-5	1-3
You can feel slight wind on your face. Leaves rustle.	6-10	4-7
Leaves and small twigs in constant motion.	11-14	7-12
Wind raises dust from ground. Loose paper and small branches move.	15-25	13-18
Small trees with leaves sway. Coastal wavelets form on inland waters.	26-32	19-24

Table 6-3. MOGAS Consumption (number of gallons).								
Generators	Mission (Hours)							
	1	2	3	4	6	8	10	12
1	3	6	9	12	18	24	30	36
2	6	12	18	24	36	48	60	72
3	9	18	27	36	54	72	90	108
4	12	24	36	48	72	96	120	144
6	18	36	54	72	108	144	180	216
8	24	48	72	96	144	192	240	288
10	30	60	40	120	180	240	300	360
12	36	72	108	144	216	288	360	432
14	42	84	126	168	252	336	420	504
18	54	108	162	216	324	432	540	648
24	72	144	216	288	432	576	720	864
36	108	216	324	432	648	864	1,080	1,296
48	144	288	432	576	864	1,152	1,440	1,728
Formula	Gallons of MOGAS = mission duration (hours) times number of generators times 3 gallons/hour.							

Table 6-4. Fog Oil Consumption (Number of 55-gallon drums) (For general planning M3A4 EM157)

Genererators	Mission (Hours)							
	1	2	3	4	6	8	10	12
1	1	2	3	4	6	8	10	12
2	2	4	6	8	12	16	20	24
3	3	6	9	12	18	24	30	36
4	4	8	12	16	24	32	40	48
6	6	12	18	24	36	42	60	72
8	8	18	24	32	48	64	80	96
10	10	20	30	40	60	80	100	120
12	12	24	36	48	72n	96	120	144
14	14	28	42	56	84	112	140	168
18	18	36	54	72	108	144	180	216
24	24	48	72	96	144	192	240	288
36	36	72	108	144	216	288	360	432
48	48	96	144	192	208	384	480	576

Table 6-5. Smoke Pot Characteristics.

Type of Smoke Pot	Burning Time (Minutes)	Ignition	Chain Ignition	Floating	Weight (Pounds)	Fuel Filler
M5	12-22	Manual or electrical	Yes	No	33	HC (solid)
M4A2	10-15	Manual	No	Yes	38	HC (solid)
XM8 (Training only)	5-7	Manual	No	No	33	TA (solid)

Table 6-6. Smoke Pot Placing Guide.

Wind Speed		Temperature Gradient	Terrain Description	Position Spacing (meters)		Distance Smoke Line from Target (Meters)
Kmph	Mph			Haze	Blanket	
1-14	1-9	All: Stable Unstable or Neutral	Open/Water	50	25	250
			Wooded	60	30	300
				70	35	350
25-15	9-16	All	Open/Water	40	20	200
			Wooded	50	25	250
26-32	16-20	All	Open/Water	30	15	150
			Wooded	40	20	200
Formula	Number of pots/points required = $\frac{\textit{Duration of Mission (min)}}{\textit{Burn Time of Pot (min)}}$					

CLASSIFICATION

1. Grid coordinates of the smoke mission (target location): _____
2. Start and stop date/time/event of smoke mission:
   START Date/Time/Event: _____
   STOP Date/Time/Event: _____
3. On/off-station date/time for the smoke unit(s):
   ON-STATION date/time: _____
   OFF-STATION date/time: _____
4. Type of visibility in the smoke required: _____
   (Blanket: less than 50 meters.) (Haze: 50 to 150 meters.)
5. Enemy location(s)/activity: _____
6. Communications:
   (a) Supported unit's frequencies and callsign:
   Primary Frequency: _____ Alternate: _____
   Callsign: _____
   (b) Supporting unit's frequencies and callsigns:
   Primary Frequency: _____ Alternate: _____
   Callsign: _____

CLASSIFICATION

Figure 6-1. Sample smoke mission coordination checklist.

CLASSIFICATION

7. Supporting unit's command relationship to the supported unit (DS, GS, attached, OPCON): _____

_____

8. Supported units' responsibilities to the supporting unit (for example, maintenance, transportation, fuel, and feeding): _____

9. Required staff coordination for the mission: (Check applicable staff sections.):
   S2 __ S3 __ S4 __ FSE __ ALO __ ENG __

10. Location of supported unit's TOC: _____

11. Challenge, password(s), and code word(s): _____

12. Coordination effected with subordinate units, DATE/TIME: _____

13. Coordination effected with adjacent units, DATE/TIME: _____

14. Designate supply route(s) in/out of area: _____

15. Determine local weather conditions and peculiarities: _____

16. Determine any additional security requirement (for example, supporting unit requirement(s) for security forces): _____

17. Liaison Information (between supported unit and supporting unit):

_____

18. Smoke operation overlay: _____

19. After action report (AAR) to division NBCC: _____
    Date/Time Mission Started: _____
    Duration of Mission: _____
    Fog Oil/MOGAS Consumption: _____
    Mission Issues/Problems: _____
    Mission Results (success or failure): _____

CLASSIFICATION

Figure 6-1 (cont'd). Sample smoke mission coordination checklist

CHAPTER 7

Flame Field Expedients

Flame Field Expedients (FFE) Checklists

Location of Fuel Mixing Site

- No fire hazards
- Firm, well-drained terrain
- Convenient to supply delivery
- Central location
- Well-ventilated and outdoors
- Posted with NO SMOKING signs

Employment in the Offense

- Raids
- Ambushes
- Low-intensity conflicts
- MOUT operations

Employment in the Defense

- Reinforce obstacles
- Augment final protective fires
- Cover dead spaces and gaps in the defense
- Illuminate critical areas of the battle

Items neceesary to mix fuel

- Water-free, standard-issue gasoline, JP4, JP5, or JP8 fuels.
- Nongalvanized fuel containers
- Wooden paddles
- Air hose and air supply source
- M4 fuel-thickening compound
- FM 3-11 or FM 5-250
- Unthickened fuel (a 60/40 mixture of gasoline and oil)

Basic items required to construct an exploding device

- Container to hold the fuel
- Fuel (thickened or unthickened)
- Buster: explosive charge
- Igniter: trip flare, M34 wP
- Grenade, raw gasoline
- Method of initiation: blasting caps

Basic items required to construct an illuminating FFE

- Container to hold the fuel
- Fuel (thickened or unthickened)
- Igniter: trip flare

Safe Handling and Minimum Safe Distance for Explosives

Safe Handling

Handling, transport, and storage of explosive items must conform to AR 385-63 and local regulations.

Responsibility for preparing, placing, and firing of charges must not be divided. Supervising all phases of the mission must rest with one person.

Personnel handing explosives, blasting caps, and demolitions must—
- Follow safety rules.
- Observe post regulations.
- Adhere to local unit SOPS.

Minimum Safe Distance for Missile Hazard

The MSD table gives distances at which personnel in the open are relatively safe from missiles created by bare charges placed in or on the ground, regardless of type or condition of the soil. See AR 385-63 and FM 5-250 for further details.

Table 7-1. Minimum Safe Distances (MSDs).

Pounds of Explosives	MSD (in meters)
1-2	300
30	311
35	327
40	342
45	356
50	369

Fire and Burn Safety

Thickened flame fuel—
Bums much longer than raw gasoline.
Sticks to objects and continues to bum.
Cannot be stamped out with a boot, it will only spread and continue to burn.

Burning Fuel on Personnel

If burning fuel splashes on an individual, he or she must react as follows:
- DO NOT run (running can result in extensive and severe burns).
- React quickly to extinguish the fire.
- Fall to the ground, face down, if burning fuel is on the front.
- Fall to the ground, face up, if burning fuel is on the back.
- Remain motionless.
- Smother the flame by depriving it of oxygen.

Soldiers not affected by the flame must —
- React quickly to help smother the flame.
- Use soil, sand, canvas, or $C0_2$ tire extinguishers (in training).
- Use BDU garments, poncho liners, or shelter halves (in combat).

Burning Fuel on Equipment
If FFE fires are on equipment, personnel must use either standard Army $C0_2$ fire extinguishers or expedients (water, sand, soil, other nonflammable dry substances).

Detection of Water in Gasoline

Water in gasoline is one of the chief causes of poor or unsatisfactory flame fuel. When mixing flame fuel, assume that all gasoline contains water unless it has just been removed.

Water in gasoline is most easily detected by sampling the liquid at the bottom of the container with an aspirator.

Removing Water from Gasoline

Siphon
Tilt the drum and allow it to stand for several minutes. Water will accumulate in the lowest portion of the drum. Insert a flexible tube or hose and siphon off the water. See FM 3-11 for additional methods.

Fuel Mixing Procedures

1. Determine quantity of M4 thickener needed.
   Rule of thumb: Number of ounces of M4 thickener = gals of gasoline x 3 (constant)
   Example M4 = 50 gallons of gasoline x 3
   M4 = 150 ounces of my fuel thickening compounds = 3 3/4 cans (2 1/2 pounds each) of M4 thickener to be added to the gasoline.

2. Add unclotted M4 thickener to gasoline while stirring.

3. Mix until applesauce texture is achieved (5-10 minutes).

4. Allow the fuel to age for 6 to 8 hours (can be emplaced while aging). Although aging is desirable, newly mixed fuel may be fired with acceptable results.

Unthickened Fuel

When M4 (or Ml) fuel thickening compound is not available, an acceptable alternative fuel can be prepared using a 60% - 40% combination of MO GAS and oil. (NOTE: Any kind of oil will work, such as standard 30 weight motor oil, fog oil, or crank case draining.) The best oil to use is 90 weight oil. Example: In a

55-gallon drum, 30 gallons of MOGAS should be mixed with 20 gallons of oil. Join the two substances and shake or stir vigorously for a minute or two. The fuel is now ready for use.

Exploding Flame Devices

See FM 3-11 for step-by-step instructions.

Vertical Flame Mine with Detonating cord

Area coverage is approximately 50 to 80 meters in diameter. Each 55-gallon flame land mine requires the following:

- One 55-gallon container.
- Fitly gallons of gasoline.
- One hundred feet of detonating cord.
- Two electric blasting caps.
- One hundred and fifty ounces of M4 thickening compound.
- One M49 trip flare or (in combat) M34 WP grenade.
- Six or seven sandbags.

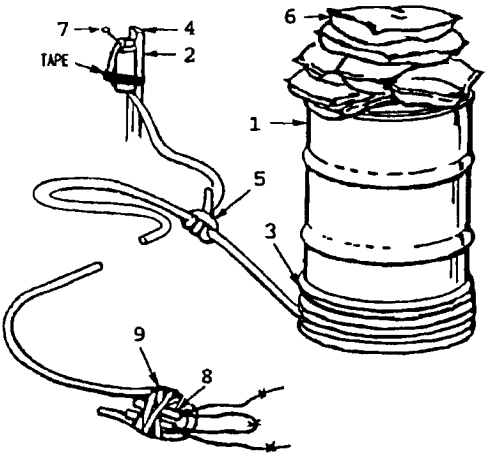

SAFETY NOTE: It is vital that electrical cap-up procedures are accomplished correctly and in the proper sequence.
NOTE: During entire cap up process, radio transmitters in the area (within 50 meters of the cap) must be turned off.

Figure 7-1. Sample vertical flame mine with detonating cord.

The illustration below shows a horizontal exploding 55-gallon flame device (detonating cord).

Area coverage is approximately 80 to 10 meters in diameter. Each horizontal 55-gallon flame land mine requires the following:
- One 55-gallon container.
- Fifty gallons of gasoline.
- One hundred feet of detonating cord.
- Two electric blasting caps.
- One hundred and fifty ounces of M4 thickening compound.
- One M49 trip flare or (in combat) M34 WP grenade.
- Two 1.25-pound blocks of composition C4 or two l-pound blocks of TNT.

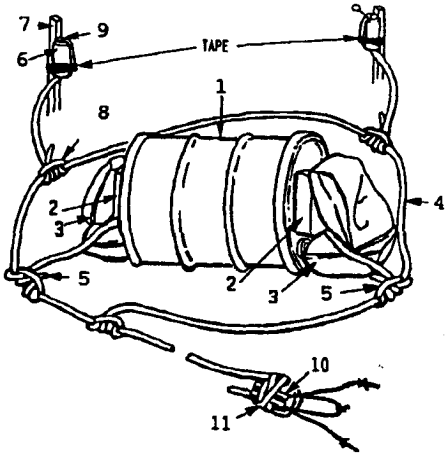

Figure 7-2. Example of a horizontal flame mine.

5-Gallon Flame Device

The illustration below shows a 5-gallon fragmentation exploding flame device (explosive charge or M4 burster). Area coverage is approximately 20 to 25 meters.

Each 5-gallon flame device requires the following:
- One 5-gallon container.
- Five gallons of gasoline.
- Twenty-five feet of detonating cord.
- Two electric blasting caps.
- One M4 field incendiary burster.
- Fifteen ounces of M4 thickening compound.

55-Gallon Flame Fougasss Container

Area coverage is approximately 150 to 200 meters in diameter.

Each 55-gallon flame fougasse device requires the following:

- One 55-gallon drum.
- Fifty gallons of gasoline.
- One hundred feet of detonating cord.
- Two electric blasting caps.
- Two 1.25-pound blocks of composition C4 or two l-pound blocks of TNT.
- One hundred and fifty ounces of M4 thickening compound.
- One M49 trip flare or (in combat) M34 WP grenade.
- Fifty to eighty sandbags.

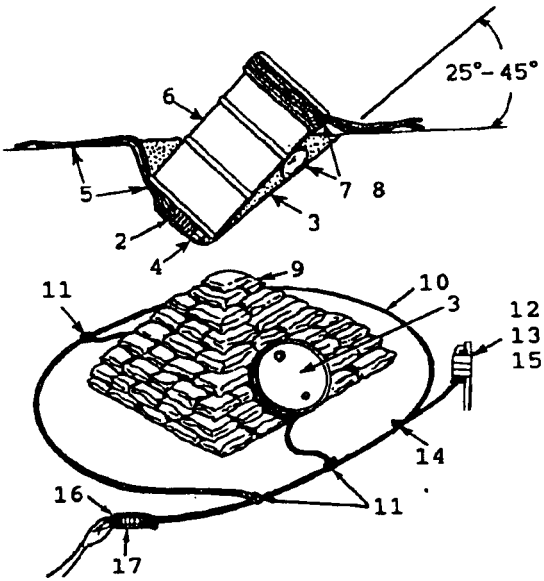

Figure 7-3. Fougasse made with a 55-gallon container.

One ammunition-can flame bunker bomb requires the following eight items:

- One small-arms ammunition container.
- One gallon of gasoline.
- Fifty feet of detonating cord.
- One nonelectric blasting cap.
- One M60 fuse igniter.
- Seven and a half feet of M700 time fuse.
- Three ounces of M4 thickening compound.
- One M49 trip flare or (in combat) M34 WP grenade.

Area coverage is approximately 5 to 10 meters in diameter. The bunker bomb is designed as a portable FFE device to be used during mobile defensive operations or raids into enemy rear areas during deep operations. This device is ideally suited for use in built-up areas during mobile operations in urban terrain.

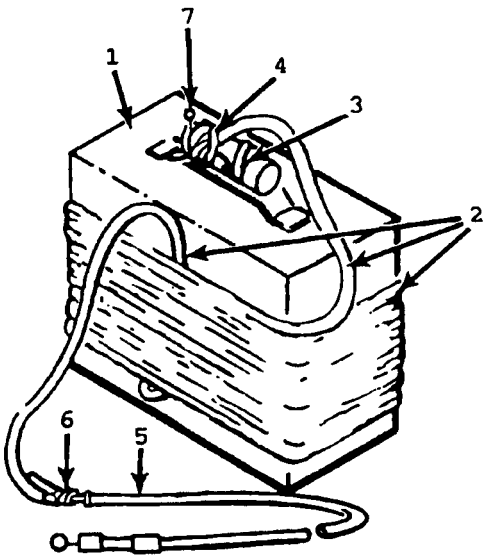

Figure 7-4. Example of bunker bomb made from an ammunition

Propellant Charge Container

Area coverage is approximately 30 to 45 meters in diameter. Each propellant charge fougasse requires the following:

- One metal cylinder or propellant charge container.
- Three gallons of gasoline.
- One hundred feet of detonating cord.
- Two electric blasting caps.
- Nine ounces of M4 thickening compound.
- One M49 trip flare or (in combat) M34 WP grenade.
- One 1.25-pound block of composition C4.
- Twenty to thirty sandbags.

The 155 powder charge Fougasse has a range of approximately 30 to 40 meters.

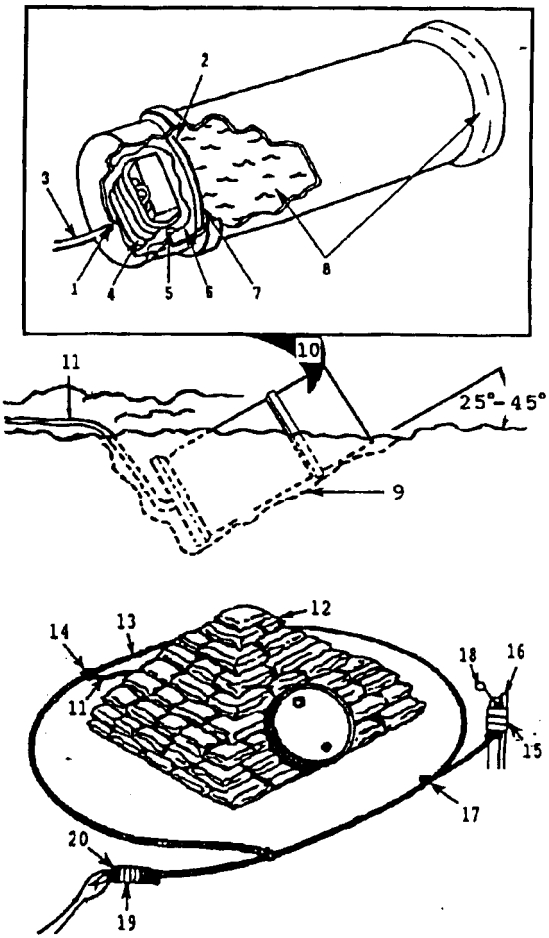

Figure 7-5. Example of a propellant charge fougasse.

Flame Illuminators

The Husch-type flare is a sealed, metal container (powder canister) 3/4 full of thickened fuel with a 1/8 to 3/16th-inch hole in the bottom. The container is placed with cap end down in half of a 55-gallon drum 3/4 full of thickened fuel. A reflector assembly made from 24-inch culvert should extend about 24 inches above the top of the drum half rim (figure below). When the fuel in the drum half is ignited, the heat from the burning fuel produces vapor in the powder canister, this vapor is

expelled as a burning jet through the hole in the canister.

A Husch-type flare will illuminate an area of about 50 meters radius for 4 to 5 hours.

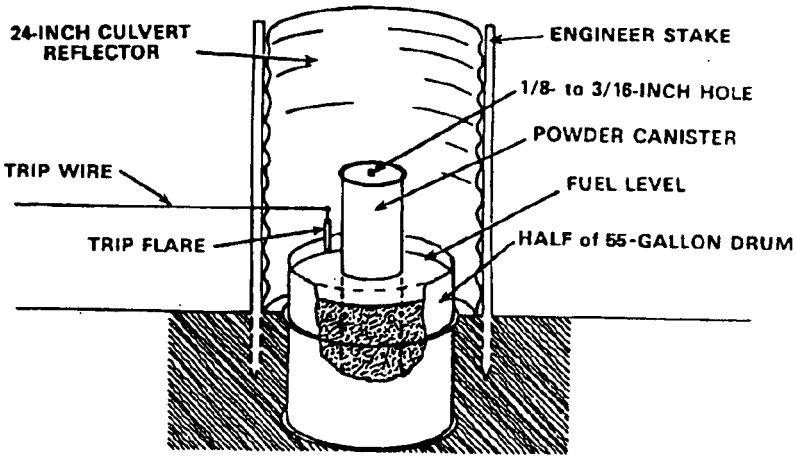

Figure 7-6. Cutaway showing composition of a Husch flare.

Methods of Firing

Exploding flame devices can be wired to fire electrically on an individual basis, in groups, or with simultaneous ignition. Also, they may be rigged with trip wires for immediate or delayed firing.

NOTE: Electric and nonelectric blasting caps can be used with various bursters or igniters.

An exploding or illuminating FFE device can be constructed, emplaced and camouflaged by 3 trained soldiers in less than an hour, provided all necessary equipment is on hand and the selected shot sites designated in advance.

Alternative explosive charges

Although M4 field incendiary bursters are designed specifically for field expedient flame weapons, this does not mean they are the only charge to be used. Alternative explosive charges, such as composition C4, TNT, claymore mines or detonating cord, may be used in lieu of M4 bursters to produce a powerful explosion.

APPENDIX A

Combat Orders

Combat orders are written or oral communications used to transmit information pertaining to combat operations.

Warning Order

A warning order gives advance notice of a contemplated action or order which is to follow. Although a warning order has no prescribed format, all known elements should be included. Figure A-1 represents a suggested format.

WARNING ORDER—Stated to alert recipients

ADDRESSEES—To whom the order pertains

SITUATION—A short, concise statement of the friendly and enemy situation

TIME/NATURE OF OPERATION—Type of mission

EARLIEST TIME OF MOVE

TIME/PLACE FOR OPORD ISSUANCE

SPECIAL INSTRUCTIONS—Details of early coordination to be made, rehearsals, and special equipment requirements.

ACKNOWLEDGE

Figure A-1. Warning order - essential elements

Operation Order (OPORD)

The operation order sets forth the organization for combat (task organization), the situation, the mission, the commander's decision and plan of action, and the details of the execution needed to ensure coordinated action by a unit. The standard OPORD format is shown in Figure A-2.

CLASSIFICATION

OPORD NO.

REFERENCES. List any maps or documents needed to understand the order or that were used in the preparation of the order.

TIME ZONE USED THROUGHOUT THE ORDER:

TASK ORGANIZATION:

1. SITUATION
   a. Enemy forces
      (1) Situation (enemy, weather, and terrain)
      (2) Capabilities
      (3) Probable course of action
   b. Friendly forces
      (1) Mission of your parent unit
      (2) Mission of unit providing your support
      (3) Mission and/or route of adjacent units that may affect your operation
   c. Attachments and detachments

2. MISSION
Who, what, when, where (coordinates), and why

3. EXECUTION
   a. Concept of operation. The overall plan (scheme of maneuver) for the unit and plan for fire support (refer to annex).
   b. Commander's intent. How commander views the upcoming operations.
   c. Sub-unit missions. For sections, teams and individuals.
   d. Coordinating instructions
      (1) Time schedule
      (2) Formations and order of movement
      (3) Route (primary and alternate)
      (4) Movement within friendly front lines
      (5) Rally points and actions at rally points
      (6) Actions on enemy contact at danger areas and at the objective
      (7) Nuclear, biological, and chemical (NBC) safety instructions and mission-oriented protective posture (MOPP) level and Priority intelligence requirements (PIR)
      (9) Fire support (if not already discussed)
      (10) Rehearsal and inspections
      (11) Debriefing (including essential elements of information (EEI), other intelligence requirements (OIR), time, and place
      (12) Annexes (other actions may be covered separately)

CLASSIFICATION

Figure A-2. Format for an operation order.

CLASSIFICATION

4. SERVICE SUPPORT
   a. Supply
      (1) Rations
      (2) Uniforms
      (3) Arms and ammunitions
      (4) Captured material
   b. Transportation
   c. Medical evacuation
   d. Personnel
   e. Prisoners of war

5. COMMAND AND SIGNAL
   a. Command
      (1) Commander leader location
      (2) Chain of command.
   b. Signal
      (1) Frequencies and call signs
      (2) Pyrotechnics and signals
      (3) Challenges and passwords
      (4) Code words

NOTES:
1. The OPORD heading items may be omitted depending on the situation.
2. Details under subparagraphs should be tailored to provide all relevant and essential information.
3. Items covered by standing operating procedures (SOP) need not be covered in the OPORD.

CLASSIFICATION

Figure A-2. Format for an operation order (continued).

(Classification)

(Change from oral orders, if any)

Copy __ of __ copies
Issuing Headquarters
Place of issue (may be in code)
Date-time Group of signature
Message Reference Number

ANNEX __ (CHEMICAL SUPPORT) TO OPERATION ORDER NO

References: Map, charts, and other relevant documents.

1. SITUATION.
   a. Enemy Forces. Information should include:
      • See annex _____ (Intelligence) to OPORD
      • Capabilities of enemy NBC weapon systems (munitions/agents).
      • Decontamination/reconnaissance assets.
   b. Friendly Forces. Information concerning NBC decontamination, reconnaissance, and smoke assets, not covered by the operation order, that are available in higher, adjacent, supporting, and reinforcing units.
   c. Attachments and Detachments. List the NBC decontamination, smoke, and reconnaissance units attached to or detached from the issuing headquarters.
   d. Assumptions (OPLAN Only). Include information on the ability of friendly forces to conduct chemical operations and defend against NBC attack. Include assumptions as to the probability of enemy use of NBC weapons. Include assumptions of vulnerability of civilian population to NBC attack.
2. MISSION. See basic OPORD.

3. EXECUTION.
   a. Concept of Operations. The concept for employment of NBC decontamination, reconnaissance, and smoke assets should be described. Priorities for NBC reconnaissance, decontamination, and smoke support established.
   b. In subsequent, separate lettered subparagraphs, state the specific tasks to be accomplished by NBC decontamination, smoke, and reconnaissance assets.
   c. Fire Support. See appendix ___ (Chemical Fire Support Plan) to annex ___ (Fire Support) to OPORD

(Classification)

Figure A-3. Model Chemical Support Annex.

(Classification)

d. Coordinating Instructions.
(1) Operational exposure guidance.
(2) Troop safety criteria.
(3) MOPP level.
(4) Location of decontamination sites.
(5) Directions for rendering assistance to local populace.
(6) Other coordination or control measures applicable to two or more elements of the command.

4. SERVICE SUPPORT.
a. General. Division installations remain in present locations. Annex H (Service Support).
b. Material and Services. Information pertaining to availability, procedure for distributing, prestock points, location of decontamination sites, and transportation of NBC defense supplies, materiel, decontaminants, and chemical munitions.

5. COMMAND AND SIGNAL.
a. Command. Location of primary and alternate NBC defense units.
b. Signal.
(1) Procedures for requesting NBC defense support.
(2) Emergency NBC attack signal, if different from that specified in the SOP.
(3) Designate NBC 1 (nuclear) observers.

Acknowledgment instructions.

Last name of commander
Rank

Authentication:
Appendixes:
Distribution:

(Classification)

Figure A-3. Model Chemical Support Annex. (continued).

(Classification)

Copy __ of __ copies
Issuing Headquarters
Date-time Group
Message Reference Number

ANNEX __ (SMOKE SUPPORT) to OPLAN/OPORD

References: Map, charts, smoke overlays, and other relevant documents.
Time zone used throughout the order:

1. SITUATION.
   a. Enemy Forces. See Annex __ (Intelligence) to OPLAN/OPORD NO
   b. Friendly Forces. Include information concerning smoke assets, not covered by the operation order, that are available in higher, adjacent, supporting, and reinforcing units.
   c. Attachments and Detachments. List assets supporting the smoke mission, attached to, or detached from the issuing headquarters.

2. MISSION. State the smoke mission, including deception operations.

3. EXECUTION.

(Commander's intent).
   a. Concept of Operation. From next higher headquarters commander. (Describe the concept for employment of smoke assets, to include priorities. Cover the role of smoke in support of the division deception plan.)
   b. (In subsequent lettered subparagraphs, give the specific tasks to be accomplished by smoke assets.)
   c. Coordinating Instructions. (State coordination or control applicable to two or more elements of the command.)

4. SERVICE SUPPORT.
   a. Material and Services. (Include information pertaining to availability, procedure for distribution, prestock points, and transportation of smoke generator fuel and other supplies.)
   b. Miscellaneous

(Classification)

Figure A-4. Model Smoke Support Annex.

(Classification)

5. COMMAND AND SIGNAL.
   a. Command. (State procedures for control of smoke assets, and location of primary and alternate command posts.)
   b. Signal. CEOI reference.

(COMMANDER)

(AUTHENTICATION)

1 ENCLOSURE (Operation overlay is enclosed)
Describe enclosure (if there is one)

DISTRIBUTION:

(Classification)

Figure A-4. Model Smoke Support Annex (continued).

Fragmentary Order

A fragmentary order is used to change or modify the OPORD. It normally follows the OPORD format but only includes the items to be changed or modified.

(Classification)

(Change from oral orders, if any)

Copy __ of __ copies
Issuing Headquarters
Place of issue (may be in code)
Date-time Group of signature
Message Reference Number

FRAGO

References:

1. SITUATION
   a. Enemy forces.
   b. Friendly forces.
   c. Attachments and detachments.

2. MISSION

3. EXECUTION
   Intent:
   a. Concept of operations.
   b. Tasks to maneuver units.
   c. Tasks to CS units.
   d. Coordinating instructions.

4. SERVICE SUPPORT

5. COMMAND AND SIGNAL

(Classification)

ACKNOWLEDGE:

NAME (Commander's last name)
RANK (Commander's rank)

OFFICIAL:

ANNEXES:
DISTRIBUTION:

(Classification)

Figure A-5. Format for Fragmentary Order.

(Classification)

Copy __ of __ copies
Issuing Headquarters
Place of issue (may be in code)
Date-time Group of signature
Message Reference Number

SITUATION REPORT NO

Period covered: (date and time to date and time).
References: Maps (series number, sheet(s), edition, scale).

1. ENEMY
   a. Units in contact.
   b. Enemy reserves that can affect local situation.
   c. Brief description of enemy activity during period covered by report.
   d. Brief estimate of enemy strength, materiel means, morale, and his probable knowledge of our situation.
   e. Conclusions covering courses of action open to enemy.

2. OWN SITUATION
   a. Location of forward elements.
   b. Location of units, headquarters, and boundaries.
   c. Location of adjacent units and supporting troops.
   d. Brief description and results of operations during periods of report.
   e. Noneffective units.

3. ADMINISTRATION
General statement of the administrative situation, if other than normal, as it directly affects the tactical situation.

4. GENERAL
Information not covered elsewhere.

5. COMMANDER'S EVALUATION
To be completed when directed by higher authority.

Authentication:

Commander

Annexes:
Distribution:

(Classification)

Figure A-6. Format for Operational Situation Report. (Based on STANAG No. 2020. Operational Situation Reports) (NOTE: Omit subparagraphs not applicable.)

APPENDIX B

NBC Defense Equipment and Training Items

Table B-1. NBC Defense Equipment.

Item/Components/Repair Parts	NSN	Reference
Adapter, Oxygen Supply, ABC M8	4240-00-848-6074	
Adhesive, Rubber Type II	8040-00-117-8738	
Alarm Unit, M42	6665-00-859-2215	
Antifreeze Bottle, 1 gallon	6685-00-181-7929	
Antiglare Eyelens, Outsert, M2	4240-00-961-1062	
Antiseize Compound	8030-00-087-8630	
Apparatus, Decon, Portable, ABC M11	4230-00-720-1618	3-4230-204-12&P
Area Predictor, Radiological Fallout, M5A2	6665-00-106-9595	FM 3-3-1
Atom Sign	9905-12-132-2579	
Bag, NBC Storage	8465-01-216-6259	
Bag, Waterproof, CB Mask, M1	4240-00-377-9401	
Battery, BA3090	6135-01-063-1978	
BA 3030		
Battery, CAM	6665-99-760-9742	
Battle Dress Overgarment		
XXX Small	8415-01-137-1700	
XX Small	8415-01-137-1701	
X Small	8415-01-137-1702	
Small	8415-01-137-1703	
Medium	8415-01-137-1704	
Large	8415-01-137-1705	
X Large	8415-01-137-1706	
XX Large	8415-01-137-1707	
Bio Sign	9905-12-132-2578	
Bolt, Machine, Hex HD, Steel	5306-00-206-4931	
Bracket, Mounting	4230-00-776-4385	
Brush, Window	7920-01-136-8892	
Btry Assy, BB501/U	6140-00-134-0850	
Btry, BA3030	6135-00-930-0030	
Btry, Dry Med Dty, BA3517/U	6135-00-450-3528	
Btry, Nonchargeable, Lithium S02, BA-5800/U	6665-99-760-9742	
Buckle	5340-00-961-5547	
Button Flap, Long	4240-00-602-2210	
Button Flap, Short	4240-00-602-2209	
Cable Assy, M168	5995-00-179-9053	
Calculator Set, ABC-M28A1	6665-00-130-3616	3-6665-303-10
Calipers	5120-00-229-3049	
CANA	6505-00-137-5891	FM 3-4
Canister, Insert Filter	4240-01-177-2675	
Carrier, Headpiece, Hosp, M12	4240-00-368-6361	
Carrier, M17	4240-00-476-2541	
Carrier, M15A1, for M17	4240-00-933-2533	

Table B-1. NBC Defense Equipment (continued).		
Item/Components/Repair Parts	**NSN**	**Reference**
Carrier, Smoke Generator, M1059	2350-01-203-0188	3-1040-279-12
Charger, RADIAC Detector, PP1578	6665-00-542-1177	TB SIG 226-8
Chemical Agent Monitor, CAM	6665-01-199-4153	TM 3-6665-331-10
Clamp, Hose	4730-00-269-3760	
Clamp, Wire	4240-00-580-6423	
Clip and Buckle Assembly	4240-00-602-2207	
CM Agent, Auto Alarm Sys, M8A1	6665-01-105-5623	3-6665-312-12
Confidence Sample, CAM	6665-99-225-3523	
Container, Decon	4230-01-136-8891	
Container, Fluid Assy (for tng)	4230-01-136-8889	
Container, DS2, 14 liter	6850-01-136-8888	
Corrosion Prev Compd	8030-00-838-7789	
Coupling, Canister: M1	4240-00-300-6457	
Coupling Half, Quick Disconnect	4230-00-903-4573	
Cover, Helmet, CP	8415-01-111-9028	
Cover, Voicemitter, Assy	4240-00-903-3606	
Cylinder, Nitrogen	4230-00-775-7541	
Decon agent, calcium hypochlorite, HTH, 99-lb barrel	6810-01-065-2410	
Decon agent, DS2, 1-1/3 quart	6850-00-753-4827	
Decon agent, DS2, 5-gallon	6850-00-753-4870	TB CML 113
Decon agent, STB, 150-pound drum	6850-00-297-6653	
Decon Apparatus, M12A1	4230-00-926-9488	3-4230-209-12
Decon Apparatus, M17	4230-01-251-8702	3-4230-228-10
Decon Apparatus, Portable, M13	4230-01-133-4124	3-4230-214-12&P
Decon Kit, Skin, M258A1	4230-01-101-3984	3-4240-216-10
Decon Kit, 291 SDK	4230-01-276-1905	
Detector, Air Filter	6665-01-071-0716	
Detector Kit, CM Agent, ABC-M18A2	6665-00-903-4767	3-6665-254-12
Detector Kit, CM Agent, M256	6665-01-016-8399	3-6665-307-10
Detector Kit, CM Agent, M256A1	6665-01-133-4964	
Detector Unit, M43A1	6665-01-081-8140	
Disk, Valve	4240-01-104-0965	
Disk, Valve, Outlet	4240-00-712-6090	
Disk, Valve (Inlet, Nosecup)	4240-01-104-0965	
Disk, Valve, Non-metallic Outlet	4240-01-712-6090	
Eyelens, Outserts	4240-00-678-0731	
Faceform Blank	4240-01-032-6050	
Fallout Prediction Plotting Scale ML556/UM	6675-00-868-8094	FM 3-3-1
Ferrule	4240-01-178-8094	
Filter Canister, M20 SCPE	4240-01-178-9936	
Filter, C2, M40 Mask	4240-01-161-3710	
Filter Element, CB Mask, M13A2	4240-00-165-5026	
Filter, GP, M56/M59/M84 MCPE	4240-01-067-5605	
Filter, M48	4240-01-161-3710	
Filter Unit, Canister, M10A1	4240-00-127-7186	
Fog Oil, SGF2	9150-00-261-7895	
Funnel, Common Lab	6640-00-889-7023	
Gas Sign	9905-23-132-2580	
Generator, Smoke, M3A3	1040-00-587-3618	3-1040-202-12
Generator, Smoke, M3A4	1040-01-143-9506	3-1040-276-10

Table B-1. NBC Defense Equipment (continued).		
Item/Components/Repair Parts	**NSN**	**Reference**
Gloves, CM Protective		TM 10-277
X-Small	8415-01-144-1862	
Small	8415-01-033-3517	
Medium	8415-01-033-3518	
Large	8415-01-033-3519	
X-Large	8415-01-033-3520	
Glove Insert, White Cotton		
Small	8415-00-268-8354	
Medium	8415-00-268-8353	
Harness, Canister	4240-00-831-2184	
Harness, Head: C15	4240-00-961-1064	
Harness, Head, *8R1)	4240-00-690-8765	
Headpiece, GP, Hosp, M13A1	4240-00-763-2464	
Helmet Cover	8415-01-111-4029	
Hood, CB Mask, Tank, ABC-M5	4240-00-860-8987	3-4240-223-15
Hood, CB Mask, Aircraft, ABC-M7	4240-00-021-8695	3-4200-219-15
Hood, CB Mask, Field, ABC-M6A2	4240-00-999-0420	
Hose, Air Duct	4240-00-829-2761	
Hose Assy, Nonmetallic	4720-01-136-9028	
Inhibitor, Corrosion, vapor	6850-00-865-2916	
Maintenance Kit, M273	5180-01-108-1729	3-6665-312-12
Marking Crayon	7510-12-120-9355	
Marking Rod	9905-12-133-0113	
Mask, CB Aircraft ABC-M24		3-4240-280-10
Small	4240-00-808-8799	
Medium	4240-00-776-4384	
Large	4240-00-808-8798	
Mask, CB, M17A1/M17A2		3-4240-279-10
Mask, CB, M40/M42		3-4240-400-10
M40—Small	4240-01-258-0061	
Medium	4240-01-258-0062	
Large	4240-01-258-0063	
M42—Small	4240-01-258-0064	
Medium	4240-01-258-0065	
Large	4240-01-258-0066	
Mask, CB, Tank, ABC M25A1		3-4240-280-10
Small	4240-00-994-8751	
Medium	4240-00-994-8750	
Large	4240-00-994-8752	
Mask, M43		
Type I, Small	4240-01-208-6966	
Medium	4240-01-208-6967	
Large	4240-01-208-6968	
X-Large	4240-01-208-6969	
Type II, Small	4240-01-265-2677	
Medium	4240-01-265-2679	
Large	4240-01-265-2678	
X-Large	4240-01-265-2680	
Microphone, Carbon (M25/A1)	5965-00-988-8770	
Microphone, Dynamic (M24)	5965-00-900-8102	
MK1 Antidote (NAAK) Kit	6505-01-140-6455	FM 3-4

Table B-1. NBC Defense Equipment (continued).		
Item/Components/Repair Parts	**NSN**	**Reference**
MK1 Antidote (NAAK) (Pkg of 30)	5505-01-140-6455	
M12A1 Gas Filter, M8A3	4240-00-289-7978	
M13 Particulate Filter, M8A3	4240-00-368-6291	
M14 GPFU, AR Ambulance	4240-00-010-5267	
M18 Gas Filter, 10 CFM, M13	4240-00-838-3952	
19 Particle filter, M13 GPFU	4240-00-866-1825	
M17A1—X-Small	4240-01-106-0485	
Small	4240-00-926-4199	
Medium	4240-00-926-4201	
Large	4240-00-926-4200	
M17A2—X-Small	4240-01-143-2017	
Small	4240-01-143-2018	
Medium	4240-01-143-1019	
Large	4240-01-143-2020	
Mount, VDR2, MT6123	5340-01-222-1374	
N-Amyl Acetate	6810-00-123-7047	
NATO Adapter	6665-01-077-2986	
NBC Marking Set, M274	9905-12-124-5995	3-9905-001-10
Nozzle, Spray Head	4730-00-873-1720	
Overboots, CM Protective	8430-01-021-5978	NA
Overboots, Vinyl, Size 3	8430-01-048-6305	NA
Overboots, Vinyl, Size 4	8430-01-048-6306	NA
Overboots, Vinyl, Size 5	8430-01-049-0878	NA
Overboots, Vinyl, Size 6	8430-01-049-0879	NA
Overboots, Vinyl, Size 7	8430-01-049-0880	NA
Overboots, Vinyl, Size 8	8430-01-049-0881	NA
Overboots, Vinyl, Size 9	8430-01-049-0882	NA
Overboots, Vinyl, Size 10	8430-01-049-0883	NA
Overboots, Vinyl, Size 11	8430-01-049-0884	NA
Overboots, Vinyl, Size 12	8430-01-049-0885	NA
Overboots, Vinyl, Size 13	8430-01-049-0886	NA
Overboots, Vinyl, Size 14	8430-01-049-0887	NA
Packing, Preformed, Hd and Cont.	5330-00-180-9903	
Packing, Preformed, Nitro Seal	5330-00-804-7767	
Paint, OD	8010-00-297-0560	
Paint, Yellow	8010-00-844-1306	
Paper, CM Agent Detector VGH ABC-M8	6665-00-050-8529	
Paper, CM Agent Detector, M9	6665-01-226-5589	3-6665-311-10
Particle Filter, MCPE	4240-01-066-3266	
Pin, Temple	4240-00-602-2208	
Polyurethane Coating	8010-08-128-6958	
Primer Coating	8010-00-082-1714	
Probe, M8A1 Alarm	6665-01-177-9252	
Pump, Manual	4320-01-136-8894	
Pyridostigmine Bromide Tablets	6505-01-178-7903	fm 3-4
Radiacmeter		
IM93/UD	6665-00-752-7759	11-6665-214-10
IM174/PD	6665-00-856-8037	11-6665-213-12
IM174A/PD	6665-00-999-5145	11-6611-232-12
IM174B/PD	6665-01-056-7422	
Radiac Set, AN/VDR2	6665-01-222-1425	

Table B-1. NBC Defense Equipment (continued).		
Item/Components/Repair Parts	**NSN**	**Reference**
Radiac Set, AN/PDR27-Series		
J Model	6665-00-543-1435	11-6665-209-10
L Model	6665-00-856-3456	11-6665-209-10
P Model	6665-00-975-7222	11-6665-224-15
Q Model	6665-00-017-8903	11-6665-209-10
R Model	6665-00-961-0846	11-6665-230-12
S Model	666501-080-4418	11-6665-249-14
Recon system NBCRS, XM93	6665-01-323-2582	
Ring, Retaining, Extension	5365-00-282-1633	
Sampling Kit, CB Agent, M34	6665-00-776-8817	3-6665-268-10
Shoestrings	8335-01-107-6998	
Stud Assembly	4240-00-962-4512	
Suit, CM Protective		TM 10-277
X-X-X-Small	8415-010070-1880	
X-X-Small	8415-01-070-1879	
X-Small	8415-00-407-1060	
Small	8415-00-177-5007	
Medium	8415-00-177-5008	
LargeX-Large	8415-00-407-1062	
XX-L	8415-00-407-1063	
Large	8415-00-407-1064	
TAP Apron, S	8415-00-281-7813	
TAP Apron, M	8415-00-281-7814	
TAP Apron, L	8415-00-281-7815	
Tape, Pressure Sensitive	7510-00-890-9872	
Thickener, Fuel, M4	DODAC K917	FM 3-11
Tool, Closing, Wire Clamp	9505-00-368-6336	
Valve, Inlet, CBR Mask	4240-00-893-3697	
Vest, Microclimate	8415-01-217-5634	
Wand, Brush Half	4710-01-136-8893	
Wand, Pump Half	4710-01-136-8890	3-4230-214-12&p
Water Purification Kit	6810-01-266-6979	
Water Test Kit, M272	6665-01-134-0885	3-6665-319-10
Winterization Kit, ABC-M4	4240-00-065-0139	
Winterization Kit, M253	6665-00-169-1455	3-6665-225-12
Winterization Kit, Tank CB Mask, ABC-M3	4240-00-066-0181	3-4240-202-14
Wire, Safety Sea	5340-00-835-9815	
Wool, Metallic: Steel Wool	5350-00-242-4403	
Yellow Rayon Ribbon	8315-12-132-2577	

Table B-2. Training Items	
Nomenclature	**NSN**
AN/TDQ-T1, Large Area Radiac Training Set (TSC Local)	6930-01-060-1627
Atomic Explosion Simulator, M142	FSC-DODIC 1370-L605
Gloves, Neoprene, Training, Small	8415-01-081-8314
Medium	8415-01-081-8315
Large	8415-01-081-8316
X-Large	8415-01-081-8317
Grenade, Hand, Riot, CS, M7A3 (16 ea)	FSC-DODIC 1330-G963
Polyethylene Glycol-200 (PEG 200), 55 Gal	6810-01-074-9719
Refills, Training Kit, M58A1	6910-01-113-2434
Riot Control Agent, ABC, CS Capsule (50 ea)	FSC-DODIC 1365-K765
Simulator, Projectile, Airburst, Liquid (SPAL) M9	1370-01-047-3479 L595
Talc, Tech, T3, 8 lb	6810-00-142-9849
Training Kit, M58A1	6910-01-101-1768
Adapter, Sampling	6910-01-113-3754
Decontaminating Kit, Skin, M291 (Dual Purpose)	4230-01-276-1905
Simulator, Automatic Alarm, M81 (Local TSC)	6665-01-088-4789
Detector Kit Training, M256	6665-01-112-1644
Training Device Diazepam Injection Automatic	6910-01-275-4833
Applicator, Disposable	6510-00-3030-8250
Brush, Acid	7920-00-514-2417
Brush, Cleaning	1005-00-494-6602
Brush, Dusting	7920-00-205-0565
Brush, Scrub	7920-00-061-0037
Calcium, Hypo	6810-00-242-4770
Cleaning Compound	6850-00-592-3283
Cheesecloth	8305-00-222-2423
Alcohol, Rubbing	6505-00-655-8366
Knife, Pocket	5110-00-162-2205
Lacquer, Black	8010-00-085-0559
N-Amyl Acetate (Banana Oil) Pint Container	6810-00-123-7047
Pail, Utility	7240-01-094-4305
Paint, Face Camofl.	6850-00-161-6203
Polish, Plastic	7930-00-935-3794
Spoon, Measuring	7330-00-875-6912
Drafting Set, Plotting	
Goggles	
Riot Control Agent, ABC, CS Capsule (50 ea)	FSD-DODIC 1365-K765
Talc, Tech, T3, 8 lbs.	6810-00-142-9849

APPENDIX C

NBC Signs

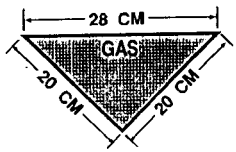

Name of Agent (If Known)
Date and Time of Detection

CHEMICAL

Yellow Background
With Red Lettering

Name of Agent (If Known)
Date and Time of Detection

BIOLOGICAL

Blue Background
With Red Lettering

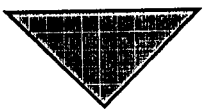

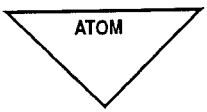

Dose Rate
Date and Time of Reading
Date and Time of Burst
(If Known)

Surface of Marker Facing
Away From Contamination
(Front)

RADIOLOGICAL

White Background
With Black Lettering

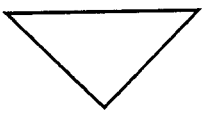

Surface of Marker Facing
Contamination (Back)

Chemical Agent In Mine
Date of Emplacement

Surface of Marker Facing
Away From Minefield (Front)

CHEMICAL MINEFIELD
(UNEXPLODED MINES)

Red Background
With Yellow Lettering
and Stripe

Surface of Marker Facing
Minefield (Back)

Figure C-1. NBC contamination marking signs.

Warsaw Pact Markers

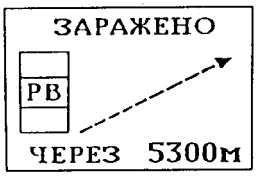

Background: Red
Lettering: Black
Rectangle on the left side contains contamination symbol.
РВ = Nuclear
Ь = Biological
ОВ = Chemical

An Arrow (dotted line on sign) indicates direction of contaminated area. A set of lines indicates a decontaminated path through the area. A number to the right of the lines indicates the width of this path.

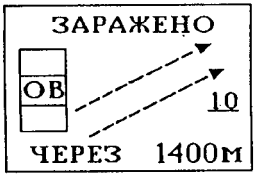

At the bottom of the sign ЧЕРЕЗ (which means across, over, or through) is followed by a number that indicates the distance across the contaminated area.

If ЧЕРЕЗ is crossed out and replaced by ОБЬЕЗА (detour), the area cannot be decontaminated

Soviet Contamination Markers

Contamination Flag

Cloth flag
Color; red or yellow
Pocket in flag is for contamination data.

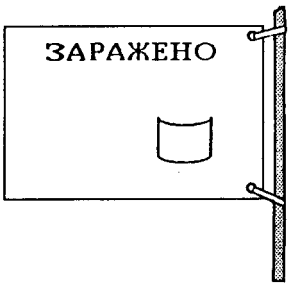

Radiological Contamination Flag

Cloth flag
Background colors:
Yellow - 1 cGy/hr
Red - 5 cGy/hr
Multicolor - >100 cGy/hr

Figure C-2. Threat Markers. Former Warsaw Pact.

APPENDIX D

Tactical Operations

MEDEVAC Request

1. Location of pick-up site.
2. Radio frequency, call sign, suffix.
3. Number of patients.
4. Special equipment required.
5. Number of patients by type of casualty (litter, walking wounded).
6. Security of pick-up site.
7. Method of marking of pick-up site.
8. Patient nationality and status.
9. NBC contamination (omit if NA).

Troop-leading Procedures

1. Receive the mission.
2. Issue the warning order.
3. Makes tentative plan.
4. Conduct coordination.
5. Make a reconnaissance (map, physical).
6. Complete the plan.
7. Issue the order.
8. Inspect/supervise/refine.

Declination Diagrams

The declination diagram (usually located in the lower right margin of a map) graphically illustrates the relationships between grid north (symbolized by the letters GN), true north (symbolized by a star), and magnetic north (symbolized by a half arrowhead). Typical declination diagrams are shown in the figure D-1.

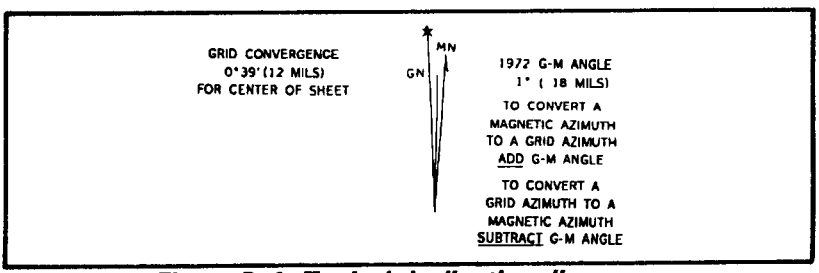

Figure D-1. Typical declination diagram.

Of particular interest to the military user is the relationship of grid north to magnetic north, since this defines the relation of azimuth directions on the map (grid) to an Azimuth obtained with a compass (magnetic). This relationship (the GM angle), is expressed in degrees and minutes and accompanies the declination diagram. Some maps also contain a note for converting from grid to magnetic azimuth and from magnetic to grid azimuth as shown. When the note is not given, conversion must be determined based on the declination diagram.

NOTE: Declination diagrams and GM Angles vary from map to map. Users should exercise extreme care to insure that the proper conversions from grid to magnetic azimuth or magnetic to grid azimuth are used.

To convert a magnetic azimuth to a grid azimuth, subtract the GM angle.

To convert a magnetic azimuth to a grid azimuth, add the GM angle

To convert a grid azimuth to a magnetic azimuth, add the GM angle.

To convert a grid azimuth to a magnetic azimuth, subtract the GM angle.

Combat Preparations

Tactical Road Marches

Movement Order

Movement order of briefing should include as a minimum the following:

- Enemy and friendly situation.
- Destination.
- Start, critical, release, and rally points.
- Rate of march and catch up speed.
- Support (indirect, direct, and medical) and communications.
- Actions on contact.
- Order of march.
- Route/alternate route.
- Distance between vehicles (day -50 meters; night -25 meters).
- Departure time.
- Location of commander.
- Lead vehicle (security/reconnaissance).

Spot Report

1. Size
2. Activity
3. Location
4. Unit/Uniform
5. Time
6. Equipment

March security

Each vehicle must be assigned a sector of fire. Vehicle crew maintains a 360-degree observation and an air guard.

Halts

Security is first priority on any scheduled, unscheduled, or disabled vehicle halt.

Defense Planning Considerations

1. Establish Security (OP/Patrols/PEWs, M8)
2. Position Key Weapons:
   a. Coordinate w/units on left and right
   b. Establish FPF or PDF for MG.
   c. Mutual support between MG.
   d. Cover armor approaches with antiarmor systems.
   e. Establish fire control measures.
3. Prepare Positions:
   a. Cheek sectors of fire.
   b. Check overhead cover and view
   c. Position in depth and achieve support between positions.
   d. Select/Prepare alternate and supplementary positions.
4. Integrate indirect fires, CAS and obstacles with direct and indirect fires.
5. Check commo and establish emergency signals.
6. Designate ammo, supply, PW, and casualty points.

Table D-1. Maximum effective range in meters of weapons.

Type	Max EFF Range (m)
M16	460
M79/M203	560
M60mg	560
mg, 50 Cal	560
LAW	560
SAW	560
90-mm RCLR	560
106-mm RCLR	560
60-mm	560
81-mm	560
4.2-in.	560
TOW	560
TOW II	560
DRAGON	560
105-mm	560
105-mm Tank	560
120-mm Tank	560
25-mm BIFV	560
155-mm BIFV	560
M198	560
8-in How	560

STANDARD RANGE CARD

For use of this form see FM 7-34. The proponent agency is TRADOC

SQD 1ST
PLT 1ST
CO B

MAGNETIC NORTH

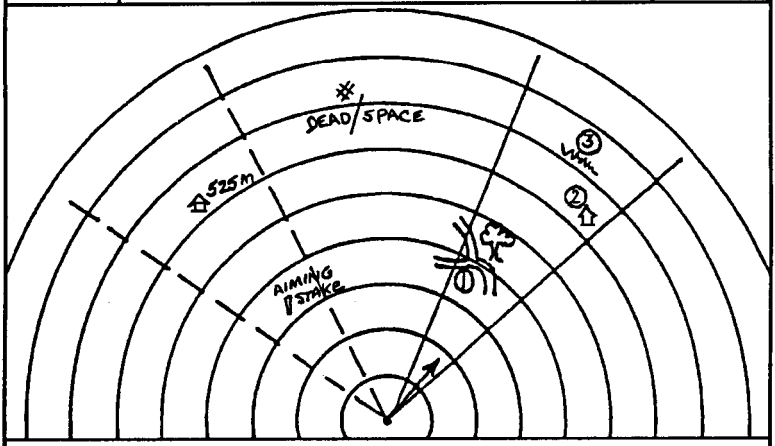

DATA SECTION

POSITION IDENTIFICATION	GL08451038	DATE	4 JULY
WEAPON		EACH CIRCLE EQUALS METERS	100

NO.	DIRECTION/ DEFLECTION	ELEVATION	RANGE	AMMO	DESCRIPTION
1	L035	0/24	400		PDF (WOODED RJ)
2	R375	-50/15	625		BARN
3	R175	-50/40	725		HEDGEROW

REMARKS:
① TW 30/R17
② TW 3/L3
③ TW 1/R3

DA Form 5517-R Feb 86

Figure D-3. Example of completed DA Form 5517-R.

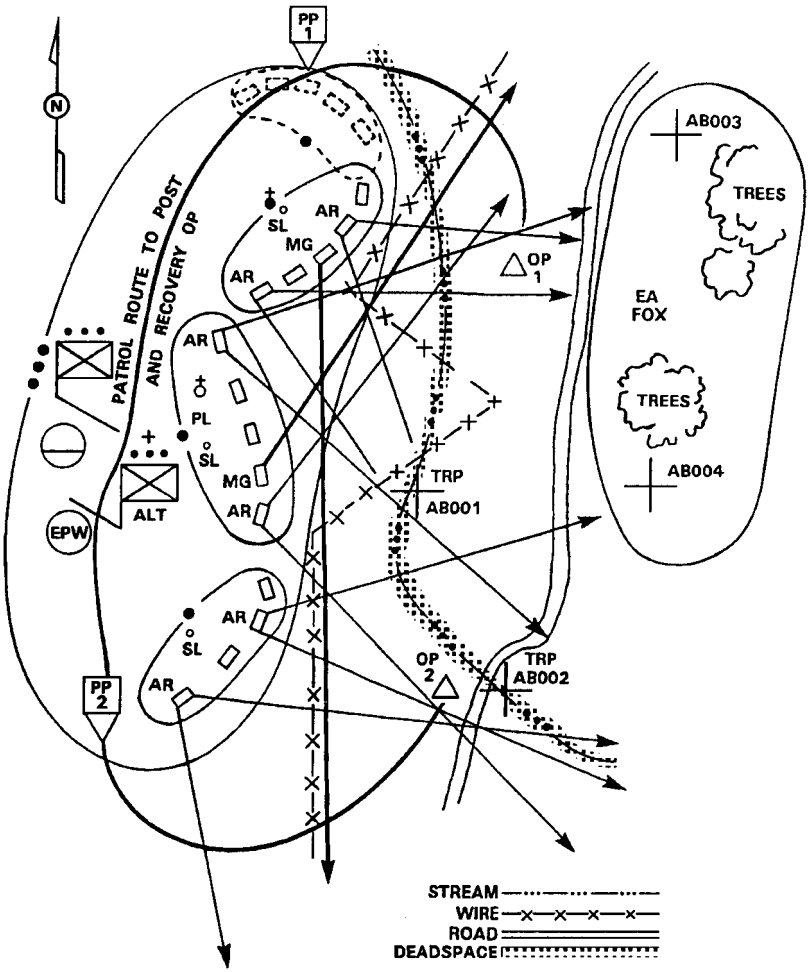

Figure D-4. Example of a platoon sector sketch.

Table D-2. Final Protective Fires.	
60-mm	70m (W) 30m (D)
81-mm	100m (W) 35m (D)
4.2 in	200m (W) 35m (D)
105-mm	200m (W) 30m (D)
155-mm (Plt)	200m (W) 50m (D)
(Btry)	400m (W) 50m (D)

Bivouac and Assembly Areas

Area must be organized to provide a continuous 360-degree perimeter security. When any element leaves the perimeter, either shrink the perimeter or redistribute the perimeter responsibilities. Crew-served weapons are the basis for the unit defense. Individual weapons provide security for the crew-served weapons and must have overlapping sectors of fire.

Section characteristics are:

- Concealment.
- Cover from direct and indirect fire.
- Defendable terrain.
- Drainage and a surface that will support vehicles.
- Exits and entrances, and adequate internal roads or trails.
- Space for dispersion of vehicles, personnel, and equipment.
- Suitable landing site nearby for supporting helicopters.

Quartering party responsibilities are:

- Reconnoiters the area.
- Checks the area for NBC hazards.
- Cheeks the area for obstacles and mines, then marks or removes them.
- Marks platoon and squad sectors.
- Selects a command post location.
- Selects a company trains location.
- Provides guides for the incoming unit(s) to accomplish immediate occupation.

Recommended priority of work:

- Post local security (LP/OP).
- Position crew-served weapons (combat engineer vehicle (CEV), antitank (AT) weapons, and machine guns) and chemical alarms.
- Assign individual fighting positions.
- Clear fields of fire, prepare range cards and camouflage vehicles.
- Prepare hasty fighting positions.
- Install/change to land line communication.
- Emplace obstacles and mines.
- Construct primary fighting positions.

- Prepare alternate and supplementary fighting positions.
- Stockpile ammunition, food, and water.

Recommend actions at the bivouac and assembly area are

- Reorganization.
- Weapons check.
- Maintenance.
- Distribution of supplies.
- Rest and personal hygiene.
- Consumption of rations.

Fire Support Procedures and Characteristics

Call for Fire Elements

Identification
Call signs.

Warning order
Type mission, adjust fire, fire for effect, immediate suppression. Method of target location: grid, polar, shift from known point.

Target location
Grid: six-digit grid (degrees (roils, or cardinal directions) direction
Polar: direction (degrees, roils, or cardinal directions) distance vertical correction (fire direction center must know observer location)

Shift: right/left from known point
add/drop from known point
vertical correct from known point
(fire direction center must have known point)

Target description
Size, number, type, degree of protection, status.

Method of engagement (optional)
Ammunition/fuze desired, sheaf corrections, high angle, danger close.

Method of tire and control (optional)
At my command, time on target, request splash.

Adjustments
The adjustments that may be needed to obtain round on target arc spotting, lateral, and range.

Spotting
Is where round lands in relation to target, such as short or long and number of roils right or left of target. Example of spottings: short 40 right or long 50 left.

Lateral correction (right/left)
Adjust the lateral shift from impact to observer target (OT) line in meters. Corrections of 20 meters or less will be ignored until firing for effect.

W = Rm W = Lateral shift correction in meters
m = mils between burst and target
R = OT factor = $\frac{\text{target range}}{1{,}000}$ (to nearest 1,000 meters)

NOTE: If target range is less than 1,000 meters, round to nearest 100 meters.

Range correction (up/down)
Mechanical time fuze only. Initial range shift correction is used to bracket target (Table D-3).

Range deviation

Table D-3. Target bracketing.

Distance (meters) to Target	Change
Less than 1.000	+/- 100 meters
1.000 to 1.999	+/- 200 meters
2.000 or greater	+/- 400 meters

Target location examples

Grid Coordinates

"F6A15, THIS IS F6A27.....Call signs of the fire direction center (FDC) and observer.
ADJUST FIRE, OVER..... Warning to alert the firing unit.
"GRID 135246, OVER.".....Normally, a six-digit grid is best.
"2 MACHINE GUNS FIRING..... Description of the target.
VT IN EFFECT, OVER"..... Adjustment is conducted with fuze quick. Fuze variable time (VT) will be used in fire for effect.
"DIRECTION 1650, OVER..... Must be sent before or with first correction.

Polar Coordinates

" F6A15, THIS 1S F6A27 .....Call signs of the FDC and observer.
FIRE FOR EFFECT, POLAR, OVER..... Warning to alert the firing unit.
"DIRECTION 0250 .....Direction from the observer to the target.

DISTANCE 3500, OVER." ..... Distance from the observer to the target.
"25 INFANTRYMEN IN OPEN..... Description of the target.
ICM, AT MY COMMAND, OVER." ..... Improved capabilities missile (ICM) rounds will be used. The observer will command FIRE at the appropriate time after the FDC informs the observer that the tiring unit is READY.

NOTE: Direction must be given before any subsequent corrections when adjusting fires

Shift From A Known Point

"F6A1, THIS IS F 6A ..... Call signs of the FDC and observer.
FIRE FOR EFFECT, SHIFT
BG43, OVER. " ..... Warning to alert the firing unit.
"DIRECTION 5470 ..... Direction from the observer to the target.
LEFT 400,OVER. " ..... The target is located 400 meters to the left of BG43 and at the same range. (Lateral shift or range changes can be omitted when not needed.)
"25 INFANTRYMEN IN SHALLOW ..... Description of the target.
FOXHOLES, VT IN EFFECT, OVER. " ..... Airbursts are most effective against protected personnel without overhead cover.

Fratricide Risk Assessment Matrix
Example of Unit Defense Perimeter TACSOP

A. Upon arrival to new site, ALL personnel:
(1) Position mission-essential vehicles for easy access to main avenue of approach.
(2) Drape camouflage over all vehicles.
(3) Prepare hasty fighting positions.
- Range cards
- Fields of tire
- Concealment
- Berms
- Choose M60 positions
- Choose primary line of tire

(4) Choose secondary positions.
(5) Run TA-1 wire to M60/Forward dismount point.

B. If no enemy action is imminent, reduce security to 1/4, and:

(6) Improve vehicle camouflage.

(7) Download vehicles.

(8) Prepare biouvac:

- CP first
- 292 and PRC-77
- Tentage
- Camo systems
- Latrine site
- Garbage site
- Concertina wire
- Hasty minefield

(9) Perform daily PMCS on ALL equipment.

(10) Prepare duty rosters.

(11) Improve fighting positions:

- Overhead cover
- Concealment
- Early warning devices
- Pyrotechnics

What can a commander expect from his chemical staff?

TOC OPERATION CHECKLIST

Section I: Mission requirements.	**YES**	**NO**
1. All radios (AM/FM) are operational and manned by qualified personnel.	____	____
2. Situation map is posted with the current operation(s) and updated with significant developments.	____	____
3. The Staff Duty Journal (DA Form 1594) is opened as soon as TOC is operational, and all significant developments are entered on the form.	____	____
Section II: Additional requirements that improve efficiency and survivability.		
4. Telephone nets are opened.	____	____
5. Planning map and/or planning overlays are available to the commander.	____	____
6. TOC personnel are assigned defensive sectors, and hasty defensive positions are prepared.	____	____
7. Access to TOC is controlled (e.g., concertina and sentries positioned and ID badges used).	____	____
8. TOC duty shifts are designated.	____	____
9. Vehicles, equipment, and positions are camouflaged.	____	____
10. Facilities are blacked out.	____	____
11. Generators are sandbagged.	____	____
12. Fighting positions are improved.	____	____

APPENDIX E

Conversions and Measurements

Conversion Factors

To Convert—	To—	Multiply By—
Acres	Square Feet	43,560
	Square Yards	4,840
	Square Miles	0.00156
	Square Meters	4,046.856
	Hectares	0.40468
Barrels	Gallons Not-Petroleum	31.5
	Petroleum	42
Centimeters	Inches	0.3937
	Feet	0.0328
Cubic Centimeters	Cubic Inches	0.06102
Cubic Feet	Cubic Inches	1,728
	Cubic Meters	0.028317
	Cubic Yards	0.037037
	Gallons	7.48
	Liters	28.32
Cubic Feet of Water	Pounds at 60°F	62.37
	Gallons	7.481
Cubic Inches	Fluid Ounces	0.554113
	Quarts	0.017316
	Gallons	0.004329
	Milliliters	16.387064
Cubic Meters	Cubic Feet	35.3145
	Cubic Yards	1.30795
Cubic Yards	Cubic Feet	27
	Cubic Meters	0.76456
Cups	Teaspoons	48
	Tablespoons	16
	Ounces	8
Feet	Centimeters	30.48
	Miles	0.00019
	Kilometers	0.0003
Gallons	Milliliters	3.785
	Cubic Inches	231
	Cubic Feet	0.1337
	Cubic Yards	0.00495
	Cubic Meters	0.00379
	Fluid Ounces	128

To Convert—	To¤	Multiply By¤
Kilograms	Long Tons	0.00098
	Metric Tons	0.001
Kilometers	Feet	3,280.8
	Miles	0.62137
Liters	Fluid Ounces	33.814
	Quarts	1.05669
	Gallons	0.2642
	British Gallons	0.2198
	Cubic Inches	61.02374
	Cubic Feet	0.03531
	Cubic Meters	0.001
	Cubic Yards	0.00131
Meters	Inches	39.37
	Feet	3.2808
	Yards	1.094
Miles	Nautical Miles	0.869
	Feet	5,280
	Yards	1,760
	Meters	1,609.344
Miles (Nautical)	Statute Miles	1.1508
Milliliters	Fluid Minnnims	16.231
	Fluid Drams	0.2705
	Cubic Ounces	0.0338
	Inches	0.061
Millimeters	Inches	0.03937
Ounces	Grains	437.5
	Drams	16
	Pounds	0.0625
	Grams	28.34952
	Kilograms	0.02835
Ounces (Fluid)	Minims	480
	Pints	0.0625
	Quarts	0.03125
	Gallons	0.00781
	Cubic Inches	1.80469
	Cubic Feet	0.00104
	Milliliters	29.57353
	Liters	0.02957
	Teaspoons	6
	Tablespoons	2
Ounces (British Fluid)	Fluid Ounces US	0.96

To Convert—	To¤	Multiply By¤
Pounds	Ounces	16
	Grams	453.6
	Kilograms	0.453592
	Short Tons	0.0005
	Long Tons	0.0004466
	Metric Tons	0.0004536
Pounds of Water	Gallons	0.1198
Quarts (Dry)	Cubic Inches	67.2006
Quarts (Fluid)	Fluid Ounces	32
	Cubic Inches	57.749
	Cubic Feet	0.033421
	Millimeters	946.358
	Liters	0.946333
Square Centimeters	Square Inches	0.115
	Square Feet	0.00108
Square Feet	Square Inches	144
	Square Yards	0.111111
	Square Centimeters	929
	Square Meters	0.0929
Square Inches	Square Centimeters	6.452
Square Meters	Square Feet	10.765
	Square Yards	1.196
Square Miles	Acres	640
	Square Kilometers	2.589998
Square Yards	Square Meters	0.836
Tons (Long)	Pounds	2,240
	Kilograms	1,016.185
	Short Tons	1.12
	Metric Tons	1.016
Tons (Short)	Pounds	2,000
	Kilograms	907.185
	Long Tons	0.89286
	Metric Tons	0.907185
Tons (Metric)	Pounds	2,204.62
	Kilograms	1.000
	Long Tons	0.984206
	Short Tons	1.10231
Yards	Centimeters	91.44
	Meters	0.9144

Celsius-Fahrenheit Conversions

°C °F	°C °F	°C °F
-50 = -58	+10 = +50	+70 = +158
-45 = -49	+15 = +59	+75 = +167
-40 = -40	+20 = +68	+80 = +176
-35 = -31	+25 = +77	+85 = +185
-30 = -21	+30 = +86	+90 = +194
-25 = -13	+35 = +95	+95 = +203
-20 = -4	+40 = +104	+100 = +212
-15 = +5	+45 = +113	+105 = +221
-10 = -14	+50 = +122	+110 = +230
-5 = +23	+55 = +131	+115 = +239
0 =-32	+60 = +140	+120 = +248
+5 = +41	+65 = +149	
°C = (°F - 32) x .56	°F = (1.8 x °C) +32	

Decontaminant Containers - Measurements and Weights

Containers	Measurement	Weights
Drum, 55-gallon, 16-gage (NSN 8110-00-597-2353)	Cubage —12 cubic feet Length —35 inches Width —27.5 inches	Empty, 70 pounds Filled with water, 526 pounds Filled with STB (slury), 600 pounds Filled with DS2, 507 pounds
Drum, 55-gallon, 18-gage (NSN 8110-00-292-9783)	Cubage —12 cubic feet Length —35 inches Width —27.5 inches	Empty, 50 pounds Filled with water, 506 pounds Filled with STB (slury), 600 pounds Filled with DS2, 487 pounds
Ash and Garbage Can, 32-gallon (GI Can) (NSN 7240-00-160-0440)	Cubage —7 cubic feet Length —26.5 inches Width —20 inches	Empty, 33 pounds Filled with water, 300 pounds Filled with STB (slury), 353 pounds Filled with DS2, 288 pounds
Gasoline Can, 5-gallon (NSN 7240-00-178-8286)	Cubage —1 cubic feet Length —18.50 inches Width —6.75 inches	Empty, 10.5 pounds Filled with water, 52 pounds Filled with STB (slury), 66 pounds Filled with DS2, 50 pounds
Pail, 5-gallon, DS2 (NSN 7240-00-575-2243)	Cubage —1 cubic feet Length —13.75 inches Width —11.12 inches	Empty, 6 pounds Filled with water, 48 pounds Filled with STB (slury), 61 pounds Filled with DS2, 46 pounds
Drum, 8-gallon, STB, 16-gage (NSN 6850-00-297-6693)	Cubage —1.4 cubic feet Length —14 inches Width —14 inches	Empty, 11 pounds Filled with water, 78 pounds Filled with STB (slury), 91 pounds Filled with DS2, 71 pounds

References

Sources Used

These are the sources quoted in this publication.

FM 3-3. *Chemical and Biological Contamination Avoidance.* 16 November 1992

FM 3-3-1. *Nuclear Contamination Avoidance.*

FM 3-4. *NBC Protection.* 29 May 1992.

FM 3-5. *NBC Decontamination.* 17 November 1993.

FM 3-6. *Field Behavior of NBC Agents (including Smoke and Incendiaries).* 3 November 1986.

FM 3-9. *Potential Military Chemical/Biological Agents and Compounds.* 12 December 1990.

FM 3-11. *Flame Field expedients.* 19 September 1990.

FM 3-18. *Special NBC reconnaissance (LB Team).* 7 May 1993.

FM 3-19. *NBC Reconnaissance.* 19 November 1993.

FM 3-100. *NBC Defense, Chemical Warfare, Smoke and Flame Operations.* 23 May 1991.

FM 3-101. *Chemical Staffs and Units.* 19 November 1993.

FM 3-101-1. *Smoke Squad/Platoon Operations.*

FM 3-101-2. *NBC Reconnaissance Platoons and Squads.*

Documents Needed

These documents must be available to the intended users of this publication.

DA Form 2028. *Recommended Changes to Publications and Blank Forms.* February 1974.

CTA 50-900.

Glossary

B

BDO— battle dress overgarment

BMNT— beginning morning nautical twilight

C

C— Celsius

CAM— chemical agent monitor

CARC— chemical agent resistant coating

CB— chemical-biological

CDM— chemical downwind message

CF— correlation factor

cGy— centigray(2)

cGyph— centigray per hour

CI— combat ineffective

COA— courses of action

CONUS— continental United States

CPOG— chemical protective overgarment

CPS— Collective Protection Shelter

CUCV— Commercial Utility Cargo Vehicle

D

DAD— detailed aircraft decon

DAP— decon apparatus, portable

DED— detailed equipment decon

deg— degree(s)

DGN— degrees grid north

DMN— degrees magnetic north

DTN— degrees true north

DGZ— desired ground zero

DKIE— deamtamination kit, individual equipment

DS2— decontaminating solution No. 2

DTD— detailed troop decon

E

EDM— effective downwind message

EENT— early evening nautical twilight

est— estimated

ETO— ethylene oxide

F

F— Fahrenheit

G

gal— gallon(s)

GEOREF— World Geographic Reference System

GMT— Greenwich mean time

GN— grid north

GZ— ground zero

H

H— high-test hypochlorite

HC— hexachloroethane

HMMWV— high-mobtity, multi-wheeled vehicle

HOB— height of burst

hr— hour(s)

HTB— high-teat bleach

hvy— heavy

I

IAW— in accordance with

ID— inside does rate

IPB— intelligence preparation of the battlefield

IPE— individual protective equipment

K

km— kilometers

kmph— kilometers per hour

KT— kiloton

L

lb— pound(s)

LDS— light decon system

LL— latent lethality

LSD— least separation distance

M

m— meter(s)

MDWIID— maximum downwind haazard distance

mech— mechanized

met— meteorological

min— minute(s)

mm— millimeter(s)

MOGAS— motor gasoline

MOPP— rnission-oriented protective posture

MGN— mils grid north

MMN— mils magnetic north

MTN— mils true north

MRL— multiple rocker launcher

MSD— minimum safe distance

mtr— motorized

N

NATO— North Atlantic Treaty Organization

NBC— nuclcar, biological, and chemical

NBCC— NBC center

NBCWRS— NBC warning and reporting system

NF— normalizhg factor

No.— number

O

oetant— one of eight world areas

OD— outside dose rate

OEG— operation exposure guidance

OPLAN— operation plan

OPORD— operation order

P

PAA— peracetic acid

PD— performance decrement

PDDE— power-driven decontaminating equipment

POL— petroleum, oils, and lubricants

Q

qt— quart

R

RES— radiation exposure status

RP— red phosphorous

S

S2— intelligence officer

S3— operations and training officer

SCPE— simplified collective-protective equipment

SG— smoke generator

SITREP— situation report

SOI— signal operating instructions

SOF— special operations forces

SOP— standing operating procedures

STANAG— NATO standardization agreement

STB— supertropical bleach

T

TF— transmission factor

TOC— tactical operations center

U

unk— unknown

US— United States of America

UT— undemanding task

UTM— universal transferse mercator

W

WP— white phosphorous

Index

A

Agents, type A, type B. *See Chemical hazard prediction.*
Air stability category, 2-2—2-3
Alarm. *See M8A1.*
Assembly areas, D-6—D-7
Atmospheric stability charts, 2-1

B

Biological warfare agents, potential, 5-6—5-7
Biological hazard prediction, 5-0—5-5
Blister agent casualties, 1-7

C

CAM, 3-19, 3-52
CARC surfaces, 1-4
Chemical agents
  wind speed effects on, 3-17
  persistency, 2-12
Chemical hazard prediction
  adjusted, 2-11
  flow chart, 2-5, 2-8
  plotting, 2-4
  Type A, case a, 2-7
  Type A, case b, 2-7
  Type B, case a, 2-9
  Type B, case b, 2-9
  Type B, case c, 2-10
  Type B, case d, 2-10
Chemical downwind message, 1-20
Collective protection, 2-13—2-16
Conversions and measurements, E-0—E-4
Correlation factors. *See Residual radiation.*

D

Decontaminants.
  decontamination mixtures, 3-51
  DS2 application, 3-51
  natural, 3-63
  standard, 3-62

Decontamination
comparison data, 3-35
detailed troop, 3-49—3-50
layouts, 3-53, 3-55, 3-57, 3-59, 3-61,
levels, 3-34
nonstandard, 3-64
operational, 3-36—3-43. *See also MOPP gear exchange.*
personnel and equipment requirements, 3-54, 3-56, 3-58, 3-60
rinse station, 3-51
specific items, 3-65—3-69
supplies, 3-33
thorough decontamination support matrix, 3-48
water usage for, 3-63
Detailed fallout prediction, 4-5—4-6

E

Effective downwind message, 1-20
Equipment,
individual protective, 3-1
NBC defense, B-1—B-5

F

Filter exchange criteria (wartime), 3-3
Fire support, D-7—D-10
Flame field expedients
5-gallon flame device, 7-5
bunker bomb, 7-7
checklists, 7-1
flame fougasse, 7-6
minimum safe distances, 7-2
propellant charge fougasse, 7-8
safety, 7-2—7-3
vertical flame mine, 7-1
Fog oil. *See Smoke.*
Fragmentary order, A-7

H

Hazards, biological. *See Biological hazard prediction.*
Hazards, chemical agent. *See Chemical agent hazard.*
Husch flare, 7-8—7-9

M

M8A1 alarms, fixed placement, 3-18

Markers, Threat, C-2
Marking signs, contamination, C-1
MEDEVAC request, D-1
MOGAS. *See Smoke.*
Monitoring. *See Radiological monitoring.*
MOPP
  analysis, 3-5
  flexibility, 3-6
  worst case open/unmasking times, 3-21—3-32
MOPP gear exchange, 3-44
  buddy team, 3-45—3-48

N

NBC warning and reporting system, 1-1—1-22
NBC reports
  flow of, 1-8
  line items, 1-9—1-12
NBC 1 report, 1-13
NBC 2 report, 1-14
NBC 3 report, 1-14—1-15
NBC 4 report, 1-14—1-15
NBC 5 report, 1-14, 1-16
NBC 6 report, 1-14, 1-17
Nerve agent casualties, 1-7
Normalizing factors, 4-10—4-11
Nuclear attack.
  actions after, 4-4—4-5
  actions before, 4-0—4-3
  actions during, 4-3

O

Observer's report. *See NBC 1 report*
Operation order, A-0—A-2
  chemical support annex, A-3—A-4
  smoke support annex, A-5—A-6
Operational situation report, A-8

P

Patient decontamination, 3-62
Prediction. *See Chemical hazard prediction.*
Protection, biological, 5-0
Protection, troop, 3-4—3-5

R

Radiation.
effects of, 4-17—4-18
injury, 4-15
types of, 4-0
Radiological.
calculations, 4-9
monitoring, 4-6
survey, 4-7; aerial, 4-8
Range card, D-4
Residual radiation.
correlation factors, 4-13
transmission factors, 4-12
Situation report. *See Operational situation report.*

S

Signs. *See Marking signs.*
Simplified fallout prediction, 4-4
Smoke.
countermeasures, 6-2
estimate, 6-3
fog oil consumption, 6-8
in the defense, 6-1—6-2
in the offense, 6-1
mission checklist, 6-5, 6-9—6-10
MOGAS consumption, 6-7
planning, 6-2—6-3
recon checklist, 6-5
support plan, 6-4—6-5
Smoke pot placing guide, 6-9
Spot report, D-2
STANAG 2984, 1-1
Strike serial log, 1-22
STRIKWARN message, 1-14, 1-16
format, 1-18
protection requirements, 1-19
Survey. *See Radiological survey.*

T

Tactical road march, D-2
TOC operation checklist, D-11
Toxins, 5-8
Training items, B-6
Transmission factors. See *Residual radiation.*

U

Unmasking procedures, 3-19
  wait times, 3-20

V

Vulnerability analysis, 1-2, 1-3, 1-4

W

Warning order, A-0

Water. *See Decontamination.*
Weather information, 1-21
Weather messages, 1-20
Wind messages, 1-20
Wind speed estimation, 6-7
Work intensity, 3-7
Work/rest cycle
  maximum work times (daylight), 3-10
  maximum work times (night), 3-15
  minutes of work per hour (daylight), 3-8
  minutes of work per hour (night), 3-13
  recovery time, 3-12
  water requirements, 3-9, 3-11, 3-14, 3-16

FM 3-7
29 SEPTEMBER 1994

By Order of the Secretary of the Army:

GORDON R. SULLIVAN
General, United States Army
Chief of Staff

Official:

MILTON H. HAMILTON
Administrative Assistant to the
Secretary of the Army
07283

DISTRIBUTION:

Active Army, USAR, and ARNG: To be distributed in accordance with DA Form 12-11 E, requirements for FM 3-7, *NBC Field Handbook* (Qty rqr. block no. 0012)

☆ U S GOVERNMENT PRINTING OFFICE: 1994 – 528 - 027/20040