FM 3-34.471 (FM 5-420)

PLUMBING, PIPE FITTING, AND SEWERAGE

HEADQUARTERS, DEPARTMENT OF THE ARMY

DISTRIBUTION RESTRICTION: Approved for public release; distribution is unlimited.

***FM 3-34.471** (FM 5-420)

Field Manual
No. 3-34.471

Headquarters
Department of the Army
Washington, DC, 31 August 2001

Plumbing, Pipe Fitting, and Sewerage

Contents

		Page
	PREFACE	**vi**
Chapter 1	**PLUMBING SYSTEMS**	**1-1**
	Section I - Basic Water Supply and Water Distribution Systems	**1-1**
	Plans	1-1
	BOM	1-2
	Water Supply Lines and Branches	1-2
	Tapping the Water Main	1-8
	Installing Curb and Meter Stops	1-10
	Hot-Water Supply System	1-11
	Fire-Protection Water Systems	1-12
	Section II - Theater of Operations Water Supply and Distribution System	**1-13**
	Water Distribution Methods	1-14
	Plans and Installation	1-14
	Design Procedures	1-14
	Section III - Sewerage System	**1-14**
	Plans	1-14
	Sanitary Sewer and Drains	1-14
	Storm Sewer and Drain	1-15
	Industrial Drain	1-16
	Pipes and Fittings	1-16
	House Sewer	1-18
	Manholes	1-20
	Sewage Disposal Systems	1-20
	Sewage Disposal Facilities	1-24

Distribution Restriction: Approved for public release; distribution is unlimited.

*This publication supersedes Field Manual (FM) 5-420, 7 May 1993, and FM 5-163, 15 October 1973.

Page

Section IV - Wastewater 1-27
Policy 1-27
Responsibilities 1-28
Consideration Factors 1-28
Collection 1-28
Disposal 1-29
Section V - Human Waste 1-30
Policy 1-31
Responsibilities 1-31
Field Expedient Facilities 1-31
Fixed and Installation Facilities 1-31
Section VI - Solid Waste 1-32
Policy 1-32
Responsibilities 1-32
Disposal 1-32
Section VII - Human Waste Disposal in the Field 1-34
Constructing and Closing Latrines 1-34
Cathole Latrine 1-35
Straddle-Trench Latrine 1-36
Deep-Pit Latrine 1-36
Bored-Hole Latrine 1-37
Latrines in Areas With High Groundwater Tables 1-38
Urine Disposal Facilities 1-41
Maintenance of Urine Disposal Facilities 1-43
Section VIII - Wastewater Disposal in the Field 1-44
Kitchen Waste 1-44
Grease Traps 1-46
Evaporation Beds 1-47
Wastewater 1-49
Design Considerations 1-49
Alternate Systems 1-53
Pipe Sizes 1-57
Pipe Cover 1-58
Chapter 2 HEATING SYSTEMS 2-1
Hot-Water Heating Systems 2-1
Steam-Heating Systems 2-2
Forced-Air Heating Systems 2-5

Page

Chapter 3 BASIC PLUMBING REPAIRS AND MAINTENANCE 3-1
Leaks 3-1
Frozen Pipes 3-3
Scale 3-4
Waste System Stoppages 3-4
Chapter 4 PLUMBING FIXTURES 4-1
Water Supply and Piping Requirement 4-1
Water Closets 4-1
Lavatories 4-12
Sinks 4-16
Urinals 4-18
Showers 4-20
Bathtubs 4-23
Laundry Tubs 4-24
Drinking Fountains 4-25
Chapter 5 WATER HEATERS....5-1
Types 5-1
Sizes 5-6
Operation Hazards 5-6
Chapter 6 PIPES AND FITTINGS 6-1
Pipe Selection 6-1
Pipe Assembly Materials 6-2
Pipe Measurements 6-3
Cast-Iron Soil Pipe and Fittings. 6-7
Galvanized-Steel/Iron Pipe and Fittings 6-19
Copper Tubing and Fittings 6-27
Plastic Pipe and Fittings 6-36
Other Types of Pipes and Fittings 6-40
Chapter 7 VALVES AND FAUCETS....7-1
Section I - Valves.... 7-1
Types 7-1
Repair and Maintenance 7-2
Section II - Faucets 7-7
Types 7-7
Installation 7-9
Repairs 7-9

Page

Chapter 8 STACKS AND BRANCHES 8-1
Pipe Selection 8-1
Pipe Size 8-1
Installation 8-3
Stack and Branch Supports 8-5
Testing 8-5
Chapter 9 TRAPS AND VENTS 9-1
Section I - Traps 9-1
Use 9-1
Types 9-1
Trap Seal Loss 9-2
Section II - Vents 9-6
Installation 9-6
Sizes 9-10
Chapter 10 STEAM, GAS, AND AIR PIPING 10-1
Steam Piping 10-1
Gas and Air Piping 10-3
Chapter 11 CENTRIFUGAL PUMPS 11-1
Characteristics 11-1
Types 11-2
Installation and Operation 11-3
Valves 11-4
Priming 11-4
Maintenance and Repair 11-5
Trouble Sources 11-5
Chapter 12 INSULATION 12-1
Types 12-1
Installation 12-3
Maintenance 12-3
Appendix A METRIC CONVERSION CHART A-1
Appendix B CONSTRUCTION PLANS AND DRAWINGS B-1
Section I - Plans and Drawings B-1
Architect's Design B-1
Typical Water Supply and Distribution System Plan B-1
Typical Utility and Building Waste System Plan B-1
Unit Construction and Package Unit Prints B-4
Section II - Plumbing and Heating Symbols B-8
Types of Symbols B-8

Page

List of Symbols B-10

Appendix C BOM C-1

Description C-1

Preparation C-1

Appendix D PIPE SIZES FOR WATER DISTRIBUTION SYSTEM DESIGN D-1

Appendix E DISTRIBUTION SYSTEMS DESIGN PROCEDURES E-1

Design Procedures..... E-1

Dynamic Water Distribution System Design E-3

Preface

This manual is a guide for engineer personnel responsible for conducting plumbing and pipe fitting operations. This manual provides information on water, waste, and heating systems and basic plumbing techniques. Use this guide to help repair fixtures, leaky pipes, and valves; to make pipe joints; to install water, waste, and heating systems; and to test and service these systems.

Plumbers install and repair water systems, waste systems, and fixtures; cut, ream, thread, and bend pipes; and caulk, solder, and test joints or systems for leaks.

Users of this manual should be familiar with the tools used by the construction military occupational specialty (MOS) in career management field (CMF) 51. This manual provides information on utility plans and drawings to include bill of materials (BOM) and standard plumbing and heating symbols; plumbing materials and procedures; sewerage, water supply, and heating installation; insulation material; and pumps. The entire pattern for soldiers in CMF 51 is described in Department of the Army (DA) Pamphlet 611-21.

Appendix A contains an English to metric measurement conversion chart.

The proponent of this publication is Headquarters (HQ), United States (US) Army Training and Doctrine Command (TRADOC). Send comments and recommendations on DA Form 2028 directly to Commandant, US Army Engineer School, ATTN: ATZT-DOT-DD, Fort Leonard Wood, Missouri 65473-6650.

Unless this publication states otherwise, masculine nouns and pronouns do not refer exclusively to men.

Chapter 1

Plumbing Systems

Plumbing is a system of piping, apparatus, and fixtures for water distribution and waste disposal within a building. This chapter covers the basic water supply and water distribution systems, the theater of operations (TO) water supply and water distribution systems, and the sewerage system. Plumbing also includes the installation and maintenance of these systems. When architects design a building, they prepare a set of prints and a set of specification sheets detailing the types and quality of materials to be used. Plumbers use the prints and specifications to layout and plan the project.

SECTION I - BASIC WATER SUPPLY AND WATER DISTRIBUTION SYSTEMS

1-1. A water supply system receives, treats, and moves water to a water distribution system. Water may come from a stream or lake, a deep or shallow well, or a reservoir which collects surface water. The water supply system purifies and pumps the water into a storage tank. After the water is purified, it is released into the distribution system. The distribution system is an arrangement of connected pipes (called a *run*) that carries the water to its destination. This system usually has a means of heating some of this water.

PLANS

1-2. See *Appendix B* for information on construction plans, prints, drawings, and plumbing and heating symbols.

WATER SUPPLY AND WATER DISTRIBUTION PLANS

1-3. A plumber should be able to install a complete water supply system by using a plan together with standard and special detail drawings and a BOM. A standard detail drawing will show the water heater and standard storage-tank connections. The plan will show the type of piping by size and fittings (*see Appendix B*).

UTILITY- AND BUILDING-WASTE SYSTEM PLANS

1-4. For more information on utility- and building-waste system plans, see *Appendix B*.

UNIT-CONSTRUCTION AND PACKAGE-UNIT PRINTS

1-5. Prints are used for structures and equipment in water supply and water distribution systems. The type of print depends on whether the unit is constructed or if it is a package unit to be assembled in the field (see *Appendix B, paragraph B-8).*

BOM

1-6. The designer (architect) or draftsman usually prepares a BOM (DA Form 2702) when preparing the original drawings. However, if no BOM accompanies the field prints, the plumber must compile it. *Appendix C* gives instructions for preparing a BOM.

WATER SUPPLY LINES AND BRANCHES

1-7. The main water supply system provides potable cold water at the main at a pressure that meets National Plumbing Code standards. The water service main for the plumbing installation Ts into the main water supply. The plumbing system must provide enough water for normal use at each outlet.

1-8. Fixture supply risers take water from the main supply to the fixtures on each floor level. Each fixture supply riser must have a diameter large enough to supply water to all the fixtures it connects. The size is determined by the design load for the riser *(*refer to *Appendix D, Tables D-3 or D-4).*

PIPE SELECTION

1-9. Cold-water systems may use galvanized-iron or galvanized-steel pipe, copper tubing, plastic pipe, brass, cast iron, galvanized, wrought iron, or other approved material. The material used depends on the—

- Amount of water to be supplied.
- Water pressure.
- Corrosion factor for different types of pipe in different temperatures.
- Cost.
- Availability.

PIPE SIZE

1-10. The size of water supply piping depends on the—

- Water pressure and friction loss through the length of the pipe.
- Number and kinds of fixtures installed (fixture demand).
- Number of fixtures in use at a given time (factor of simultaneous use).
- Type of flushing devices *(*refer to *Chapter 4).*

Friction Loss

1-11. When a liquid flows through a pipe, layers move at different speeds, with the center layer moving fastest. This resistance to flow (called *friction loss*) varies with different types of pipe. Pipe friction, in turn, causes a drop in water pressure. In a small pipe, this friction loss is overcome by increasing the

water pressure. If higher water pressure is not possible, increasing the pipe size can reduce friction loss. See *Appendix D* for friction loss in different types of pipe.

Water Hammer

1-12. In a water supply system, water hammer occurs when flowing water is stopped abruptly or cannot be compressed, causing the flowing water to slam against the valve with the same amount of pressure as applied to the water system (such as when you flush a water closet, the water closet's tank completes the filling action, and the control valve in the tank closes).

1-13. The effects of water hammer are noise from rattling pipes and sometimes leaky pipe joints, both of which can be eliminated easily by installing a device called a *expansion chamber* to slow the water in the plumbing system. The expansion chamber shown in *Figure 1-1* is capped at the upper end causing it to fill with air, not water. Air, unlike water, can be compressed. Therefore, when the water flow is stopped abruptly, the air in the air chamber works like an automotive shock absorber relieving the slamming action against the valve. Install expansion chambers in the water supply system on both hot and cold service lines at each major fixture within a structure.

1-14. Expansion chambers can be purchased or fabricated. *Figure 1-1* shows an example of a constructed expansion chamber. The type of pipe and the dimensions used are not critical, but ensure that the section identified as the riser is at least 6 inches long.

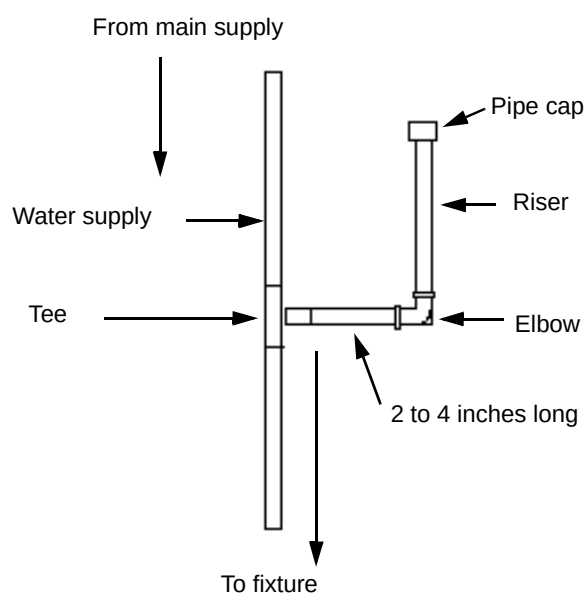

Figure 1-1. Expansion Chamber Construction

Water Pressure

1-15. Pressure in the main usually ranges from 45 to 60 pounds per square inch (psi). If the pressure is over 60 psi, a pressure-reducing valve must be placed in the water service line at its entry to the building. The size of the water service pipeline, the rate of use, the length of the line, and the outlet height in the system control the pressure available at the outlet. If the water pressure is less than 15 psi, use a tank and a pump or other means to provide pressure. If the water pressure is over 80 psi, use an approved pressure regulator.

Calculations for Sizing Pipe

1-16. The minimum practical size for a water service line is 3/4 inch. This size should be used even when calculations indicate a smaller one. Calculations for factoring loss of pressure in complex systems are beyond the range of this manual. For simple systems, use approximate figures to find the pipe size. *Tables D-1* and *D-2, Appendix D*, give capacities and psi for galvanized-steel/iron pipe, copper tubing, and plastic pipe. Use these tables combined with the maximum fixture demand and simultaneous use factor to determine pipe sizes.

1-17. **Maximum Fixture Demand.** The maximum fixture demand in gallons per minute (GPM) is the total amount of water needed to supply all the fixtures at the same time. Estimate the maximum fixture demand by counting the number and types of fixtures in the plumbing system. *Table 1-1* gives the maximum fixture demand for different fixtures.

Table 1-1. Fixture Demand (in GPM)

Fixture	GPM
Water closet	45.0
Lavatory	7.5
Shower	15.0
Urinal	39.5
Slop sink	22.5
Laundry tub	15.0
Floor drain	7.5

1-18. For example, what is the maximum fixture demand for a plumbing system which consists of the following 14 fixtures: 2 water closets, 4 lavatories, 2 showers, 3 urinals, 1 slop sink, 1 laundry tub, and 1 floor drain? Use *Table 1-1* and the following steps:

Step 1. Multiply the number of each fixture by the GPM of that type fixture (from *Table 1-1*).

Step 2. Total these figures.

1-19. The result is a maximum fixture demand of 313.5 GPM.

NOTE: Use the fixture demand (313.5 GPM) with the simultaneous-use factor to select the pipe size.

1-20. **Simultaneous-Use Factor.** The simultaneous-use factor is the percentage of fixtures potentially in use at a given time *(Table 1-2)*. It is an estimate of the total demand on a water supply system, expressed as water supply fixture units. Simultaneous-use factors decrease as the number of fixtures in a building increases. Use the formulas in *Table 1-2* to determine simultaneous use factor.

Table 1-2. Simultaneous-Use Factor

Number of Fixtures	Percent of Simultaneous Use
1-5	100 minus (number of fixtures minus 1) x 12.75
6-50	50 minus (number of fixtures minus 1) x .56
51 or more	Estimate at 30 percent

1-21. If a table for the simultaneous-use factor is not available, estimate the probable demand by computing 30 percent of the maximum fixture demand in gallons.

1-22. Continuing the example in *paragraph 1-18*, the 14 fixtures would have a simultaneous use of 42.72 percent (round up to 43 percent). Since the fixture demand was 313.5 GPM, the water service line must have a capacity of 43 percent of 313.5 (110 GPM). What size of pipe would be needed for a 60-foot long pipeline with a pressure at the main of 45 psi *(*refer to *Appendix D*, *Tables D-1* and *D-2)*?

Step 1. Read down the 60-foot column in *Tables D-1* or *D-2*, to 1 1/2 inch diameter.

Step 2. Read across (left) to the psi column and establish the given as 45 psi.

Step 3. Read back to the 60-foot column. *Table D-1* shows 150 GPM (the quantity that includes 110 GPM); *Table D-2* shows 155 GPM (round up to 160 GPM).

1-23. Either 1 1/2-inch galvanized, copper, or plastic piping would be large enough for the water service line.

NOTE: Remember, the minimum practical size for a water service line is 3/4 inch. This size should be used even when calculations indicate a smaller size.

INSTALLATION

Main Water Supply Line

1-24. The main water supply is a pipe, usually hung from a ceiling, with branches connected to serve the fixture risers. This supply pipe has the same diameter as the water service from the main and is centrally located to

provide short takeoffs to the fixture supply risers throughout the building. To reduce friction loss, lay the main supply piping as straight as possible. The main supply pipe must not sag or trap water. It should be graded slightly, up to 1/4 inch per foot, dropping toward the water meter. At the low end of the grade, place a drip cock or stop-and-waste valve for draining the pipe in the winter. A drainpipe may be needed to carry the wastewater from the opening in the valve to a floor drain or sump. If it is impossible to grade all the piping to one point, all parts that cannot be centrally drained should have separate drip cocks or stop-and-waste valves. The main supply pipe must be well supported to take its weight off the fittings and to prevent leaks.

Fixture Supply Risers

1-25. Use reducing Ts to connect fixture supply risers to the main supply. Run the risers through the interior walls of the building. Tighten all the joints before the partitions are finished. Use pipe rests or clamps to support vertical-fixture supply risers at each floor level. (Fixture supply risers must not depend on the horizontal branches for support.) Horizontal-fixture branches should be well supported and graded upward toward the vertical-fixture supply risers.

Valves

1-26. Install gate valves in each vertical supply riser, so that a section can be repaired without shutting off the water to other sections. Small gate valves on the supply to each fixture allows for shutting off the water for faucet repairs.

TESTING FOR LEAKS

1-27. Inspecting for leaks is important. A leaky joint wastes water and causes costly damage to the building. In new construction, test the entire system for leaks before the floor and partitions are closed up. When performing this test, use the water pressure from the main that feeds the system. While the system is under pressure, inspect each joint for moisture. If a leak is detected in a joint, tighten the joint or replace it by cutting the pipe and connecting a new section with a union. When working with copper soldered joints or plastic solvent-cement joints, drain the pipe and then connect the joint. Copper compression joints can be tightened or replaced.

DISINFECTING THE PIPING SYSTEM

1-28. After installation or repair, clean and disinfect plumbing pipes and other parts of a water supply system carrying drinking water before use. Flush the system to remove dirt, waste, and surface water. Disinfect each unit with a chemical such as a solution of hypochlorite or chlorine.

Dosage

1-29. Under average conditions, use the dosages (in parts per million [ppm]) in *Table 1-3*. The chlorine dosage required to disinfect a unit depends on the—

- Contact time.
- Amount of organic chlorine-consuming material present.

Table 1-3. Chlorine Dosage

Unit	Minimum Dosage (ppm)
Pipe	50
Storage	50
Filter	100
Well	150

- Volume of water to be disinfected. *Table 1-4* gives the volume of water for different sizes and lengths of pipe.

Table 1-4. Volume of Water Disinfected (By Pipe Size)

Pipe Diameter (in Inches)	Volume Per Foot of Pipe (in Gallons)
2	0.16
4	0.65
6	1.47
8	2.61
10	4.08
12	5.88
16	10.45
20	16.32

Application

1-30. Use portable gas chlorinators to apply the liquid chlorine. Chlorine cylinders should not be connected directly to the mains because water may enter the cylinder and cause severe corrosion, resulting in dangerous leakage. A solution of hypochlorite is usually applied by measuring pumps, gravity-feed mechanisms, or portable pipe-disinfecting units. Use the following steps to apply disinfectant:

Step 1. Flush all sections thoroughly at a velocity of at least 3 feet per second (fps) until all the dirt and mud are removed.

Step 2. Plug all branches and other openings with plugs or heads properly braced to prevent blowouts.

Step 3. Insert the disinfectant into the mains through taps or hydrants at the ends of each section.

Step 4. Bleed out any air trapped in the line.

Step 5. Add the predetermined chlorine dosage as the main slowly fills with water.

Step 6. Continue feeding until the water coming from the supply end contains the desired amount of chlorine.

Step 7. Keep the chlorinated water in the unit for 24 to 48 hours.

Step 8. Flush the main until the water contains only the amount of chlorine normally in the supply.

Step 9. Analyze samples daily for bacteria until the analyses show no further need for disinfection. If the samples are unsatisfactory, rechlorinate.

MAINTENANCE AND REPAIR

Corrosion

1-31. Galvanic corrosion (resulting from a direct current of electricity) occurs in a plumbing system that includes two different kinds of metal pipe, such as galvanized pipe and copper pipe. See *Chapter 3* for reducing and repairing corrosion.

Scale

1-32. Hard water contains a large amount of calcium and magnesium compounds, which prevent soap from lathering. This forms a scum that slows the flow of water. The scum deposits harden and form scale. See *Chapter 3* for reducing and removing scale.

Frozen Pipes

1-33. Water supply lines may freeze when exposed to temperatures below 32 degrees Fahrenheit. Outside pipes must be buried below the frost line. In northern zones, this is 4 feet or more. If the building temperature falls below freezing, inside pipes may also freeze, causing the pipe to break at the weakest point. Use the procedures in *Chapter 3* to thaw frozen pipes.

TAPPING THE WATER MAIN

1-34. Water mains are usually cast iron, 8 inches or more in diameter. If the main is less than 8 inches in diameter, taps should be 2 inches or smaller. Use *Figure 1-2* and the following steps to tap the water main:

Step 1. Dig to expose the pipe at the point where the tap is to be made. Dig as close to the top of the water main as possible.

Step 2. Clean all dirt and rust off the pipe at that point.

Step 3. Place the gasket of the water-main self-tapping machine on the pipe, and set the saddle of the machine on the gasket.

Step 4. Wrap the chain around the pipe, and tighten it to clamp the water main self-tapping machine to the pipe.

Step 5. Remove the cap from the cylinder of the machine, and place the combination drill and tap in the boring bar.

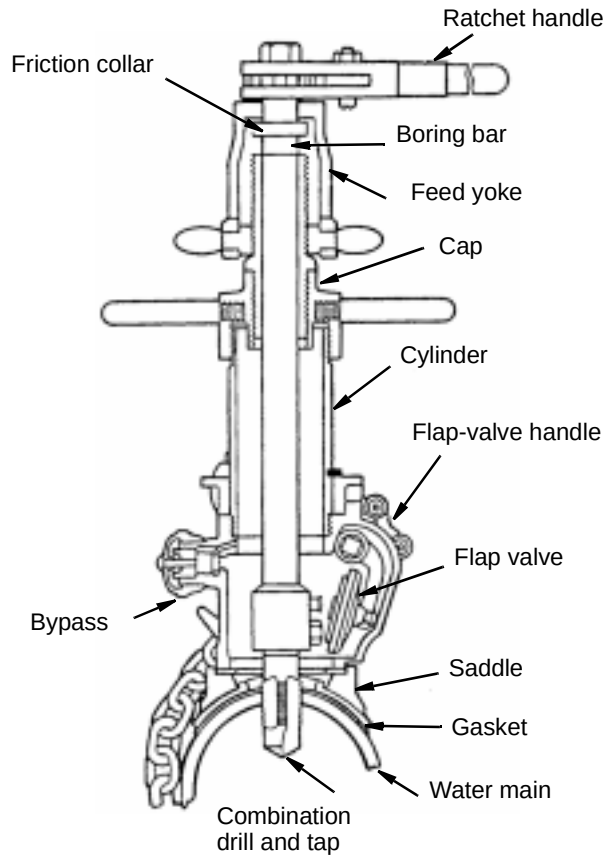

Figure 1-2. Tapping the Water Main

Step 6. Reassemble the machine by putting the boring bar through the cylinder and tightening the cap.

Step 7. Open the flap valve between the compartments.

Step 8. Start drilling the hole by applying pressure at the feed yoke and turning the ratchet handle until the drill enters the main.

Step 9. When the tap starts threading the hole, back off the feed yoke to prevent stripping the threads.

Step 10. Continue to turn the boring bar until the ratchet handle can no longer be turned without extra force.

Step 11. Remove the tap from the hole by reversing the ratchet. Then, back the boring bar out by turning it counterclockwise.

Step 12. Close the flap valve between the upper and lower compartments.

Step 13. Drain the water from the cylinder through the bypass.

Step 14. Remove the cap and drill tool. Place a corporation stop *(Figure 1-3, page 1-10)* in the boring bar, ensuring that the stop is closed.

Step 15. Repeat steps 6 and 7.

Step 16. Turn the ratchet handle to thread the corporation stop into the pipe.

Step 17. Repeat step 13.

Step 18. Remove the cap from the cylinder, and unbolt the boring bar from the corporation stop.

Step 19. Remove the lower chamber from the pipe.

Step 20. Inspect for leaks.

Step 21. If the corporation stop leaks, tighten it with a suitable wrench.

INSTALLING CURB AND METER STOPS

1-35. Curb and meter stops control the water entering the building. *Figure 1-3* shows this installation.

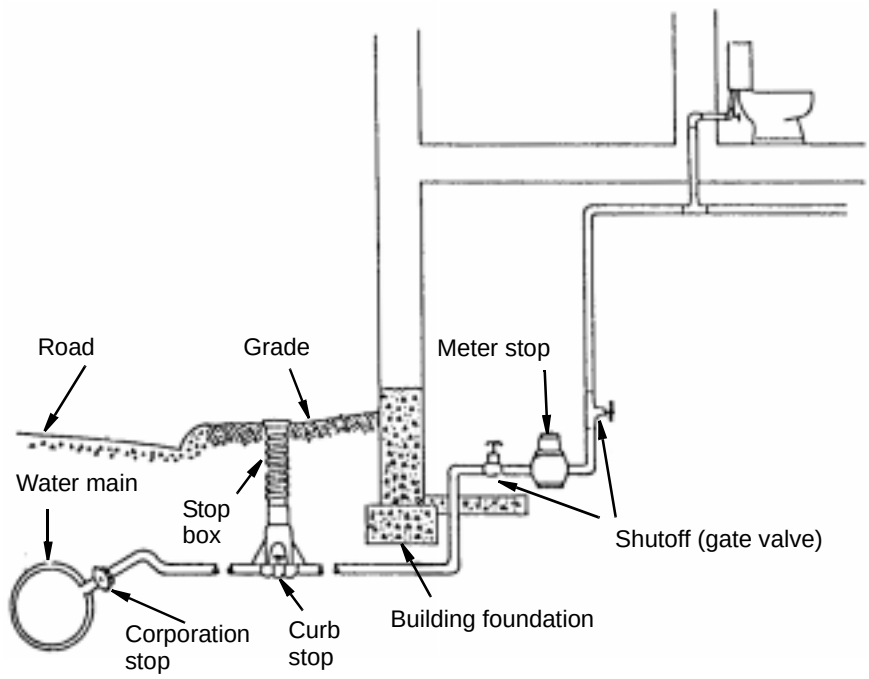

Figure 1-3. Curb and Meter Stops

CURB STOP

1-36. After tapping the water main and inserting the corporation stop, install the curb stop in a suitable position. It is usually set in a cast-iron stop box to provide easy access in the water service between the curb and the building.

1-37. The stop box has a variable telescopic length for use on different grades. When the water service is copper, join the curb stop to the service piping with a compression joint. After installing the curb stop, run the water service line to the building and through the building wall to the inside of the

basement. The water service line can be laid in the same trench as the sewer. The bottom of the water pipe at all points should be at least 12 inches above the top of the sewer line. The water pipe should be placed on a solid shelf excavated at one side of the common trench with a minimum clear horizontal distance of at least 12 inches from the sewer line. It must be placed in the ground at a level deeper than the maximum depth of frost penetration.

METER AND METER STOP

1-38. After running the water service lines through the side of the building and closing the holes around the service pipe with waterproof cement, install the water meter and meter stop.

Meter Stop

1-39. The meter stop is a ground-joint valve, which controls and shuts off the flow of water into the building. Place the meter stop as close to the service pipe entry as possible.

Water Meter

1-40. The water meter, installed near the meter stop, measures the amount of water used in the building.

1-41. Often the meter and stop are placed in a meter vault that replaces the stop box at the curb. In this case, place a stop-and-waste valve in the line where the water service enters the building.

HOT-WATER SUPPLY SYSTEM

1-42. The hot-water system consists of a water heater and a piping system. This system runs parallel to the cold-water pipes running to the plumbing fixtures (faucets) where hot water is desired. A standard detail drawing will show the water heater and standard storage-tank connections. The water heater is fueled by gas, oil, electricity, or possibly solar energy.

WATER HEATERS

1-43. Water heaters are classified into four categories: range-boiler, gas, oil-burning, and electric. See *Chapter 5* for water heaters.

PIPE SELECTION

1-44. The pipes used in hot-water systems are similar to those used in cold-water supply systems. Old hot-water systems used wrought-iron or steel pipe. Newer systems use chlorinated polyvinyl chloride (CPVC) plastic pipe, since CPVC resists corrosion. Copper is the most commonly used piping for distribution.

PIPE SIZE

1-45. To size the hot-water main supply lines and the risers, follow the same procedure as for basic water supply, *paragraph 1-10, page 1-2*.

INSTALLATION

1-46. Installation begins with a water-heating device and the main supply line from that device. Grade the hot-water supply to a centrally located drip cock near the water heater. Water for the fixtures at various levels throughout the building is taken from the main hot-water supply by fixture supply risers. Each of the risers should have a valve.

ONE-PIPE SYSTEM

1-47. Buildings with a large floor area or with several floors need the supply of hot water to the fixture as soon as possible after the tap is opened. In a one-pipe system, such as that used for cold-water supply, a lag occurs from the time the hot-water tap is opened until the water travels from the water-heating device to the tap.

TWO-PIPE SYSTEM

1-48. To overcome this time lag, use a two-pipe, circulating-water supply system *(Figure 1-4)*. Hot water passes from the water heater through the main fixture supply risers and returns through a line to the water heater. This looped system circulates the hot water at all times. Warm water tends to rise and cold water tends to fall, creating circulation. The water within the loop is kept at a high temperature. When a tap is opened, hot water flows from the hot-water supply riser into the branch and out of the tap. The cold-water filler within the hot-water storage tank (water heater) has a siphon hole near the top of the tank. If reduced pressure occurs at point A, the siphon hole allows air to enter the cold-water filler. This breaks the vacuum and prevents back siphonage of hot water into the cold-water distribution system.

1-50. This circulating supply system *(Figure 1-4)* is an overhead-feed and gravity-return system and is likely to become air-locked. An air lock prevents circulation of the hot water. Since air collects at the highest point (B) of the distribution piping, the most practical way to relieve the air lock is to connect an uncirculated riser to the line at that point. The air lock is relieved when a fixture on the uncirculated riser is used.

MAINTENANCE AND REPAIR

1-51. Maintenance and repair of hot-water systems is similar to what was previously discussed. Refer to *paragraphs 1-31, 1-32,* and *1-33, page 1-8.*

FIRE-PROTECTION WATER SYSTEMS

FIRE HYDRANTS

1-52. Fire protection for buildings of fire-resistant construction is provided by fire hydrants. These are usually located at least 50 feet from each building or from the water distribution system within the building.

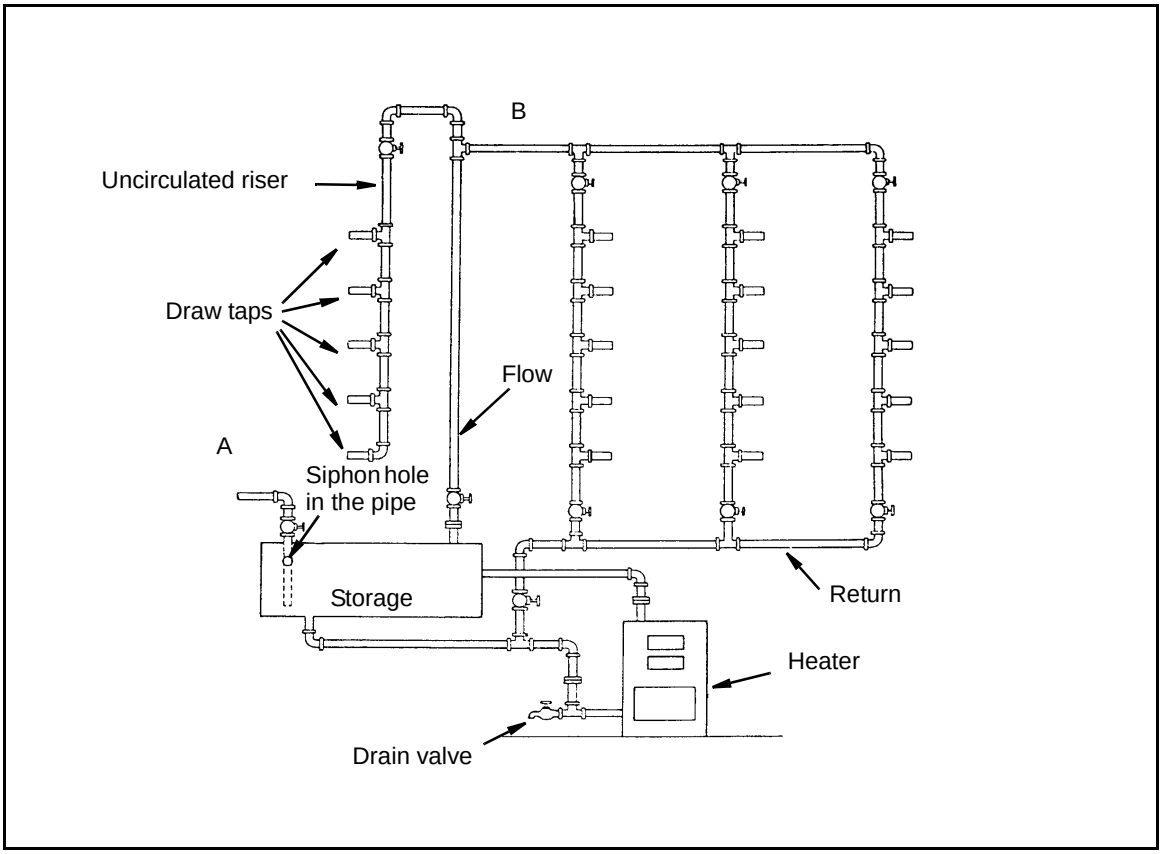

Figure 1-4. Circulating Hot-Water System (Two-Pipe)

AUTOMATIC SPRINKLER SYSTEMS

1-53. Automatic sprinkler systems are used for fire-resistant structures only when the value, the importance of the contents or activity, or the possibility of a fire hazard justifies a sprinkler system. Buildings of frame and ordinary construction that are more than two stories high and house tops will be protected by automatic sprinkler systems.

SECTION II - THEATER OF OPERATIONS WATER SUPPLY AND DISTRIBUTION SYSTEM

1-54. In a TO, there is always a chance the Army may have to take over the repair and operation of a municipal water system. Although most systems will be similar to those used in the US, problems can be expected in obtaining replacement parts and operating supplies. Sizes and dimensions of basic components can be expected to differ from those in the US and even require the use of metric tools. Also, certain nations may use different disinfecting methods than chlorine. Under these circumstances, the Army should consider hiring former local employees who are familiar with the equipment to operate and maintain the system.

WATER DISTRIBUTION METHODS

1-55. After water is purified, it is released into the distribution system. The distribution of large quantities of water under tactical conditions will be by pipelines, trucks carrying bladders, and 5,000-gallon tanker trucks. Small quantities can be picked up from tank farms or storage and distribution points in 400-gallon water trailers or in refillable drums, 5-gallon cans, and individual containers.

PLANS AND INSTALLATION

1-56. *Appendix B, Figure B-1,* shows a water distribution system plan for a hospital area. The general location and size of the pipes are shown, together with the valves, sumps, water tank, and other fixtures. Generally, the symbols used on distribution-system plans are the same as those for water plumbing. (See *Appendix B, Section II,* for standard plumbing symbols.) The plumber who installs the system determines the location of the pipes and other equipment to suit the climate and terrain, and according to the National Plumbing Codes.

DESIGN PROCEDURES

1-57. See *Appendix E* for water distribution system design procedures used in the TO.

SECTION III - SEWERAGE SYSTEM

1-58. A sewerage system consists of the pipes and apparatus that carry sewage from buildings to the point of discharge or disposal. The system includes sewer pipe and conduits, manholes, flush tanks, and sometimes storm-drain inlets. If it is not served by a processing plant, the system may include facilities for pumping, treating, and disposing of sewage. Roofs, inner courts, vents, shafts, light wells, or similar areas having rainwater drains should discharge to the outside of the building or to the gutter. Get administrative approval before connecting to the drainage system.

PLANS

1-59. *Figure 1-5* shows a typical sewerage system and a drain system.

SANITARY SEWER AND DRAINS

BUILDING DRAIN

1-60. The building drain receives the discharge of sanitary and domestic wastes (or soil and waste) from within the building.

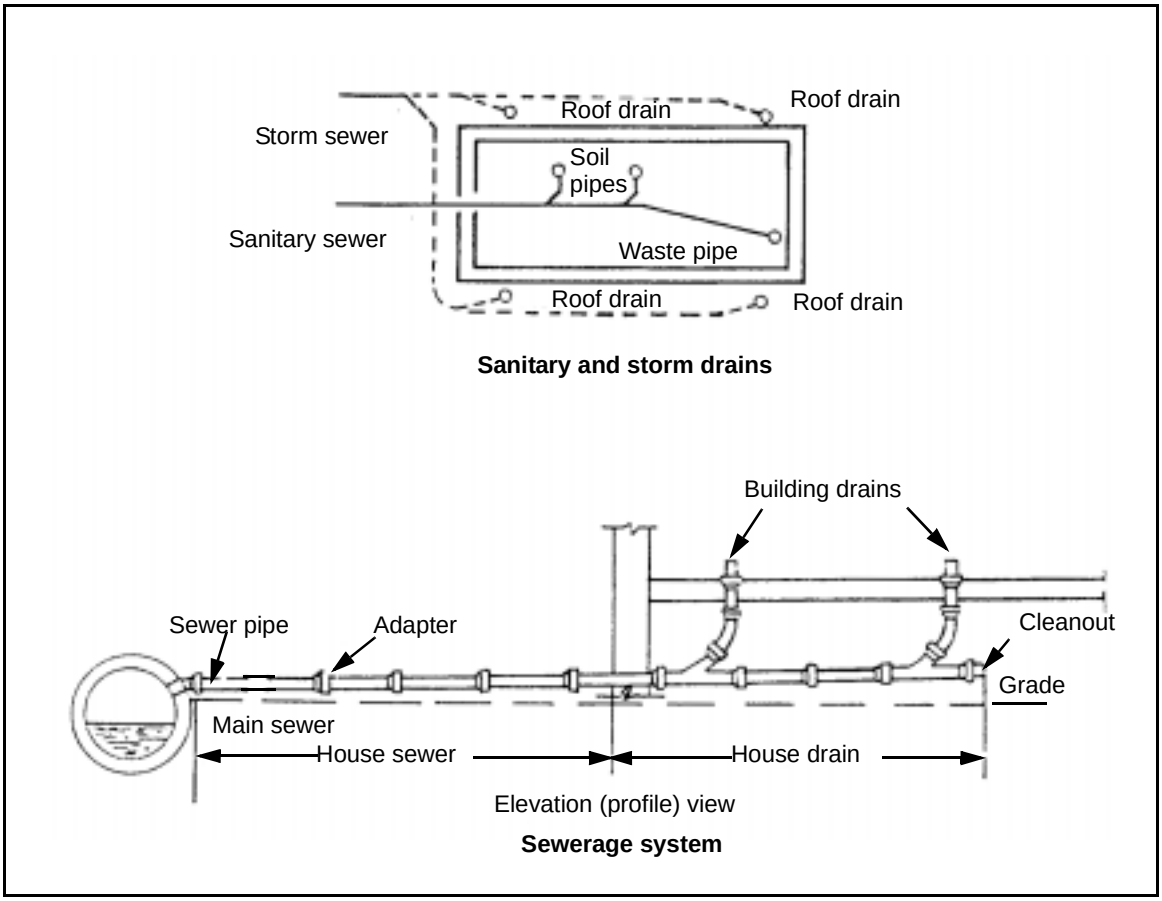

Figure 1-5. Sewerage and Drain Systems

HOUSE DRAIN

1-61. The house drain is located between and is connected to the building drain and the house sewer. The house drain, also called the collection line, receives the discharge of sanitary and domestic wastes from the building drain and carries it to the house sewer line or pipe, as shown in *Figure 1-5*. The house drain may be underground or suspended from the basement ceiling.

HOUSE SEWER

1-62. The house sewer line or pipe begins just outside the building foundation wall and ends at the main sewer line or pipe in the street or at a septic tank *(Figure 1-5)*. A house sewer line or pipe carries liquid or waterborne wastes from the house drain to the main sewer lines. Sanitary sewers are not connected to the storm sewers, because the sanitary discharge must be treated before it is dumped into a stream or lake.

STORM SEWER AND DRAIN

1-63. A storm sewer line or pipe carries rain water and subsurface water. Since the discharge sewer is runoff water, treatment is not needed. The storm

drain receives storm water, clear rain, or surface-water waste only *(Figure 1-5, page 1-15)*.

INDUSTRIAL DRAIN

1-64. The industrial drain receives liquid waste from industrial operations. However, this type of drain is of little importance in TO construction.

PIPES AND FITTINGS

1-65. The pipes and fittings for sewer systems are standard to the National Plumbing Codes and general usage.

PIPE SELECTION

1-66. Cast-iron soil pipe or plastic pipe is usually used for house sewers and drains. Bituminous-fiber pipe, when not prohibited, may be substituted for cast-iron pipe for the house sewer. Concrete or vitrified-clay pipe is found in older installations.

Vitrified-Clay or Concrete Sewer Pipe

1-67. These pipes are connected with resilient joints, using a rubber sleeve and/or rigid joints by compressing rubber or neoprene rings. Vitrified-clay tile is highly resistant to all sewerage and industrial wastes. Concrete pipe may be manufactured with steel reinforcement; it comes in diameters of 12 to 108 inches.

Cast-Iron Soil Pipe

1-68. Cast-iron soil pipe is classified as follows:

- Hub-(or bell-)and-spigot. Hub-and-spigot pipe comes in 5- and 10-foot lengths (in various diameters). It is connected with lead, oakum, or mechanical compression joints.
- Hubless. Hubless pipe comes in 10-foot lengths (in various diameters). It is connected with a stainless steel band over a neoprene sleeve.

Plastic Pipe

1-69. Acrylonitrile butadiene-styrene (ABS) is gray or black plastic pipe used for storm or sanitary drainage, above and below ground. It is connected with solvent-cement joints. This pipe comes in 10- and 20-foot lengths in various diameters.

Cast-in-Place Concrete Conduit (Tube or Pipe)

1-70. This conduit is used when a pipe larger than 60 inches is needed to increase the capacity in a main, a trunk, or an outfall sewer. The drains are arches or culverts reinforced with concrete.

PIPE SIZE

1-71. Sewerage systems are usually constructed of pipe ranging in diameter from 2 to 36 inches. Both the house sewer and the house drain must be leakproof and large enough to carry off the discharge of all plumbing fixtures. If either the sewer or the drain is too small, fixtures may overflow. The house sewer and house drain are usually the same size. Waste matter is forced through the house drainpipe by water. Therefore, the pipe must be large enough to carry out all the water and waste discharged through it; but it must be small enough for the water to move rapidly, forcing the waste through to the sewer. A pipe sized to flow half full under normal use will have good scouring action and can carry peak loads when required.

Drainage Fixture Units (DFUs)

1-72. The discharge of a plumbing fixture is figured in DFUs. One DFU represents approximately 7.5 gallons of water being discharged per minute. The DFUs for standard fixtures are shown in *Table 1-5*.

Table 1-5. DFU Values

Fixture	Unit Value (DFUs)
Lavatory or washbasin	1
Floor drain	2
Kitchen sink	2
Bathtub	2
Laundry tub	2
Shower	2
Slop sink	3
Urinal	6
Water closet	6

1-73. For example, assume that a plumbing installation consists of 2 water closets, 4 lavatories, 2 shower heads, 3 urinals, 1 slop sink, 1 laundry tub, and 1 floor drain. Determine the discharge in DFUs from *Table 1-5*. Assume that the cast-iron house drain will have a slope of 1/4 inch per foot.

Step 1. Multiply the number of each fixture by its DFU value from *Table 1-5*, for a total of 45 DFUs.

Step 2. Read down the 1/4 inch column in *Table 1-6, page 1-18*. The fixture unit capacity next higher than 41 is 96.

Step 3. Read horizontally across to the left to 4 inches.

1-74. As a result, the minimum pipe size required is 4 inches.

Pipe Capacity

1-75. *Table 1-6* lists the capacity (in DFUs) of various pipe sizes for horizontal drains. This table is for cast-iron soil pipe, galvanized-steel/iron pipe, or plastic house drains, house sewers, and soil and waste branches. When using copper tubing (drain, waste, and vent (DWV) type) for above ground only, it may be one size smaller than shown on the table.

Table 1-6. Horizontal Sanitary Drain Capacity (in DFUs)

Size of Pipe (in Inches)	Slope (Inches per Foot)	
	1/8	1/4
1 1/4	1	1
1 1/2	2	2
2	5	6*
3	15**	18*
4	84	96
5	162	216
6	300	450
8	990	1,392
10	1,800	2,520
12	3,084	4,320

***No water closet will discharge into a pipe smaller than 3 inches (includes DWV-type copper tubing).**

****No more than two water closets will discharge into any 3-inch, horizontal-branch house drain or house sewer.**

1-76. To find the correct size of the pipe, plan the slope of the pipeline by counting the total number of DFUs emptying into a horizontal drain line.

PIPE SUPPORT

1-77. A base of solid, undisturbed earth provides enough support for house sewer and drain piping. This prevents future settling, which might cause the weight of the pipe sections to press too heavily on the joints. If the soil is loose, each joint should be supported on concrete, cinder block, or brick.

HOUSE SEWER

INSTALLATION

1-78. Usually the first step in installing the house sewer is to connect the sewer thimble and then work back, grading up to the house drain. The hole cut in the sewer must be no larger than necessary to fit the sewer thimble. All joints must be supported. The thimble should be tapped in above the normal

flow level. For example, if the street sewer is 24 inches in diameter and the normal flow is 50 percent, the tap should be at least 12 inches above the bottom of the pipe. Install the thimble with its discharge parallel to the direction of sewer flow. This prevents backflow during periods of high flow. Use the following installation steps:

Step 1. Tap gently around the circumference of the main sewer to find the depth of flow for placing the thimble. A dull sound results from tapping below the sewer level, and a ringing sound results from tapping above the sewer level.

Step 2. Use the thimble as a pattern for marking the size of the hole with chalk.

Step 3. Make the cut on this line with a small, cold chisel and an 8-ounce ball peen hammer, as shown in *Figure 1-6*. Use light blows to prevent damage to the main sewer.

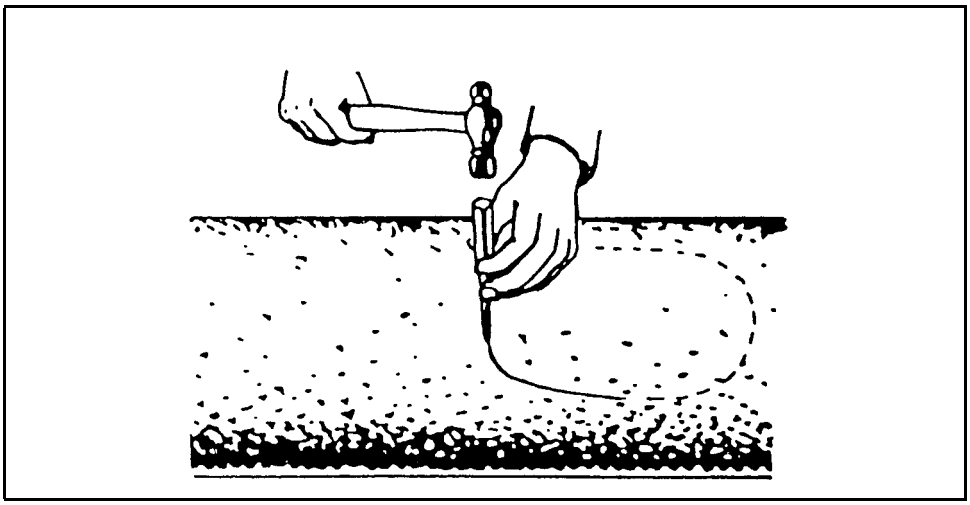

Figure 1-6. Cutting a Hole in the Main Sewer

Step 4. Work around the cut until a depth of 1/8 to 3/16 inch is reached.

Step 5. Make a small hole in the center of the area to be removed. Always use light blows.

Step 6. Enlarge the hole into an oval shape as near the size of the sewer thimble as possible. Try the thimble in the opening often to see if it will fit without enlarging the hole.

Step 7. Place the thimble in the proper position and pack oakum around the edges of the flange.

Step 8. Complete the installation by packing a rich portland cement mortar (one part sand to one part cement) around the thimble. Use enough mortar under the thimble, on the bottom of the tap, and on the top and sides. Support the joint until the mortar sets.

NOTE: The system must be tested after it is completed.

GRADING

1-79. When possible, house sewers should be graded to a slope of 1/4 inch per foot. Greater or lesser slope is permitted when necessary. Trenches for house sewers may be graded with surveying instruments or with a carpenter's level having a rising leg or a board under one end. For example, a 1/4-inch-per-foot slope would be 1/2 inch for 2 feet using a 2-foot carpenter's level with a 1/2-inch thick board under one end. If the pipe is sloped correctly, the level will read *level* anywhere on the pipe except the hub. The drain is graded toward the main sewer with the hub end of the pipe lying upgrade. A similar procedure uses an 8-foot board and a 4-foot level.

DANGER
All underground plumbing must be laid at least 12 inches from any underground electrical cable. Failure to do so could result in physical injury, death, and/or destruction of equipment

MANHOLES

1-80. Manholes are entranceways to the sewer system (for cleaning, inspection, and repair). They are round and are constructed of cement with brick-and-mortar walls on a concrete slab. A removable heavy lid in a cast-iron ring closes the top. *Figure 1-7,* is a section drawing of a round manhole. The base slab slopes from 10 to 9 inches. The lid is 2 1/3 feet in diameter by 3 1/4 inches thick. There are three shelves around the pipes in an opening measuring 3 feet 6 inches in diameter. (Precast concrete manholes are available, but the military plumber rarely installs this type.)

SEWAGE DISPOSAL SYSTEMS

GREASE TRAPS

1-81. Grease traps are placed in the flow line of the building's sewer system to catch grease and fats from kitchen and scullery sinks. (Solid grease usually clogs the waste pipes.) The box-type traps are made of brick, concrete, or metal, in various shapes and sizes. The grease trap should be set in the waste line as close as possible to the fixture. *Figure 1-8,* shows baffle walls, which control the flow. Baffle walls are placed in boxes to separate floating grease particles.

SEPTIC TANKS

1-82. A septic tank speeds up the decay of raw sewage *(Figure 1-9, page 1-22).* It may be concrete, stone, or brick, in box-section form. (Lumber is used when other materials are not available.) It should be watertight. The siphon chamber makes certain that liquid will flow from the chamber; however, the siphon chamber is not absolutely necessary. The baffle boards are usually 2-

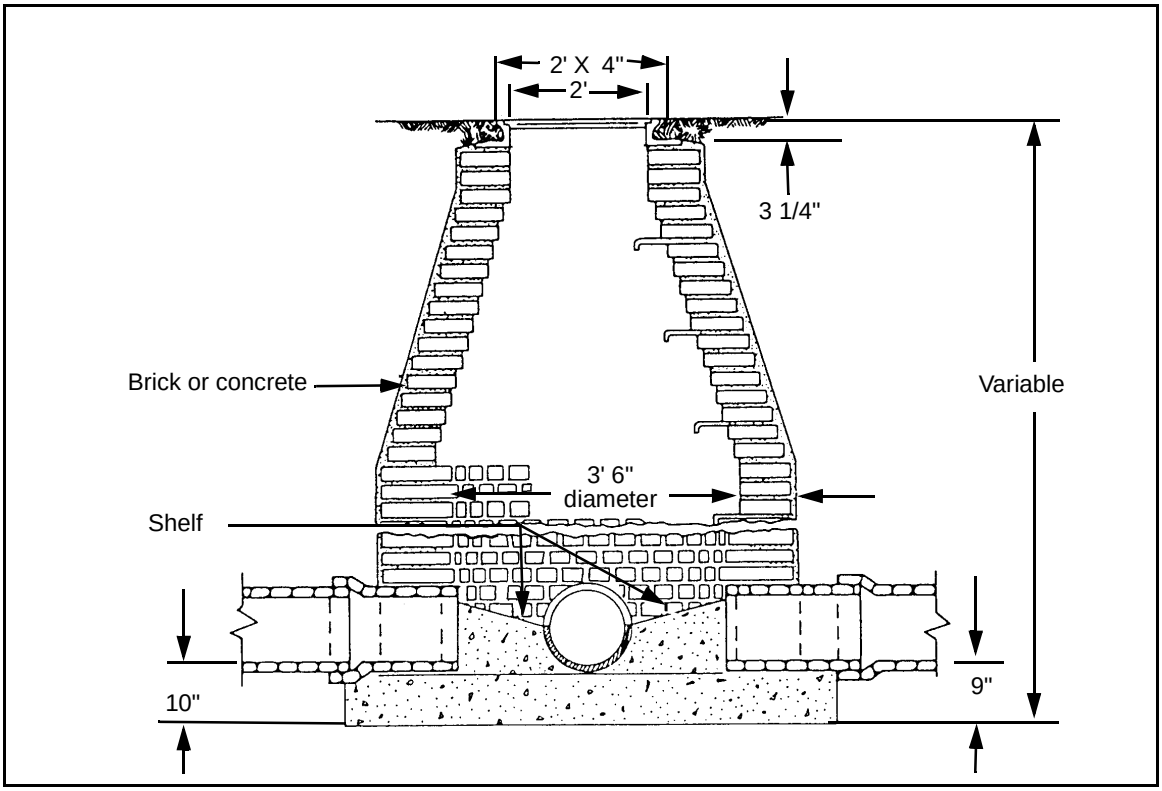

Figure 1-7. Round Manhole Construction

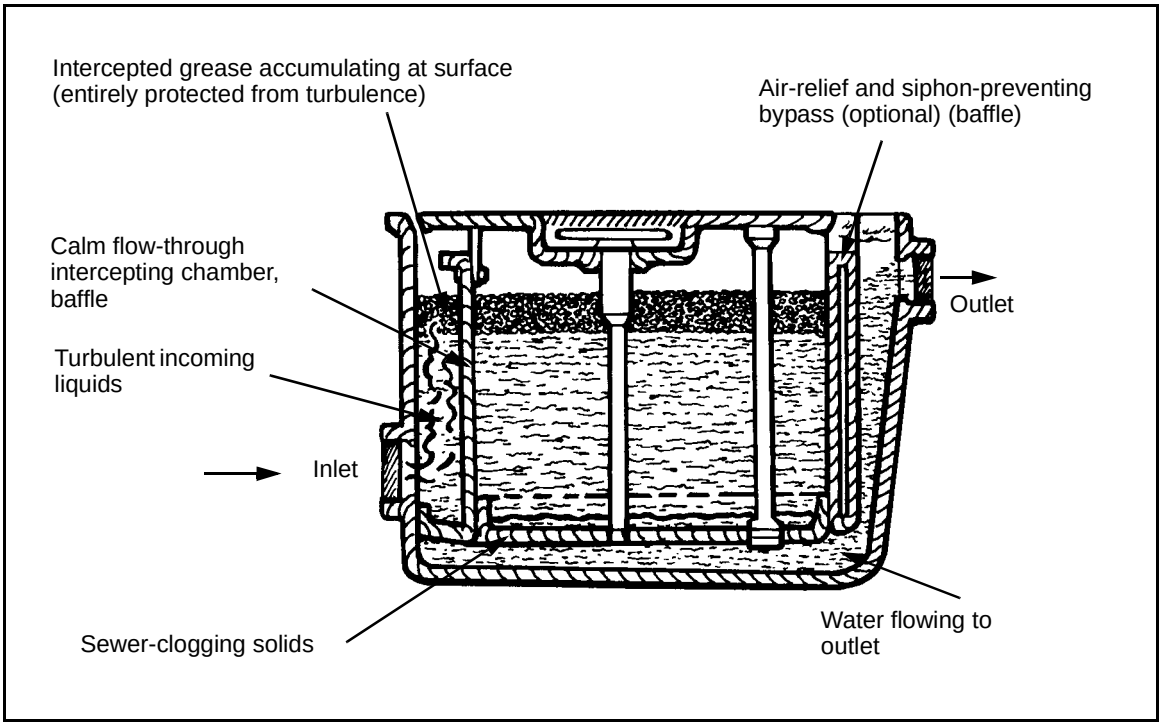

Figure 1-8. Grease Trap

inch oak planks, which run entirely across the tank. The boards are suspended from hangers and extend several inches below the surface of the sewage. One board should be located 10 inches from the *inlet* pipe and the other about 4 inches from the *outlet* partition. The septic tank should have a manhole and cover to give access for cleaning and repair. Septic tanks must be designed to hold for 24 hours and not less than 16 hours, 70 percent of the peak water demand of that facility.

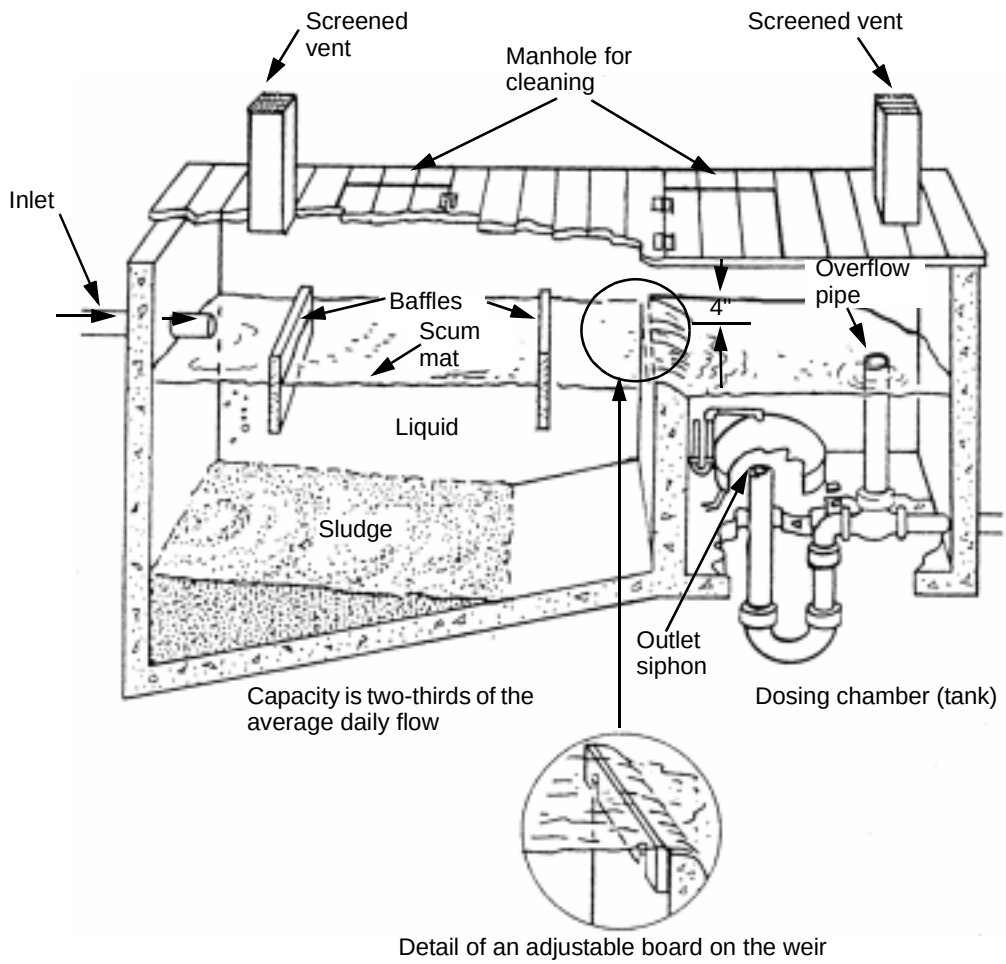

NOTES:
1. Use the board cover only to retain heat in cold climates or to control fly nuisance.
2. When not required for dosing the tile drain system, the dosing chamber and siphon are omitted.

Figure 1-9. Septic Tank

1-83. *Figure 1-10,* shows a small sewerage system, which includes the septic tank. The distribution box, which permits equal flow to all the lines of the disposal field, can be either wood, concrete, or brick. The diversion gate is usually wood with a handle slot, so it can be moved to change the sewage flow.

1-84. The system shown in *Figure 1-10* uses both a septic tank and a subsurface sand filter to dispose of sewage. A plumber needs both a plan and a profile (elevation) view of the system.

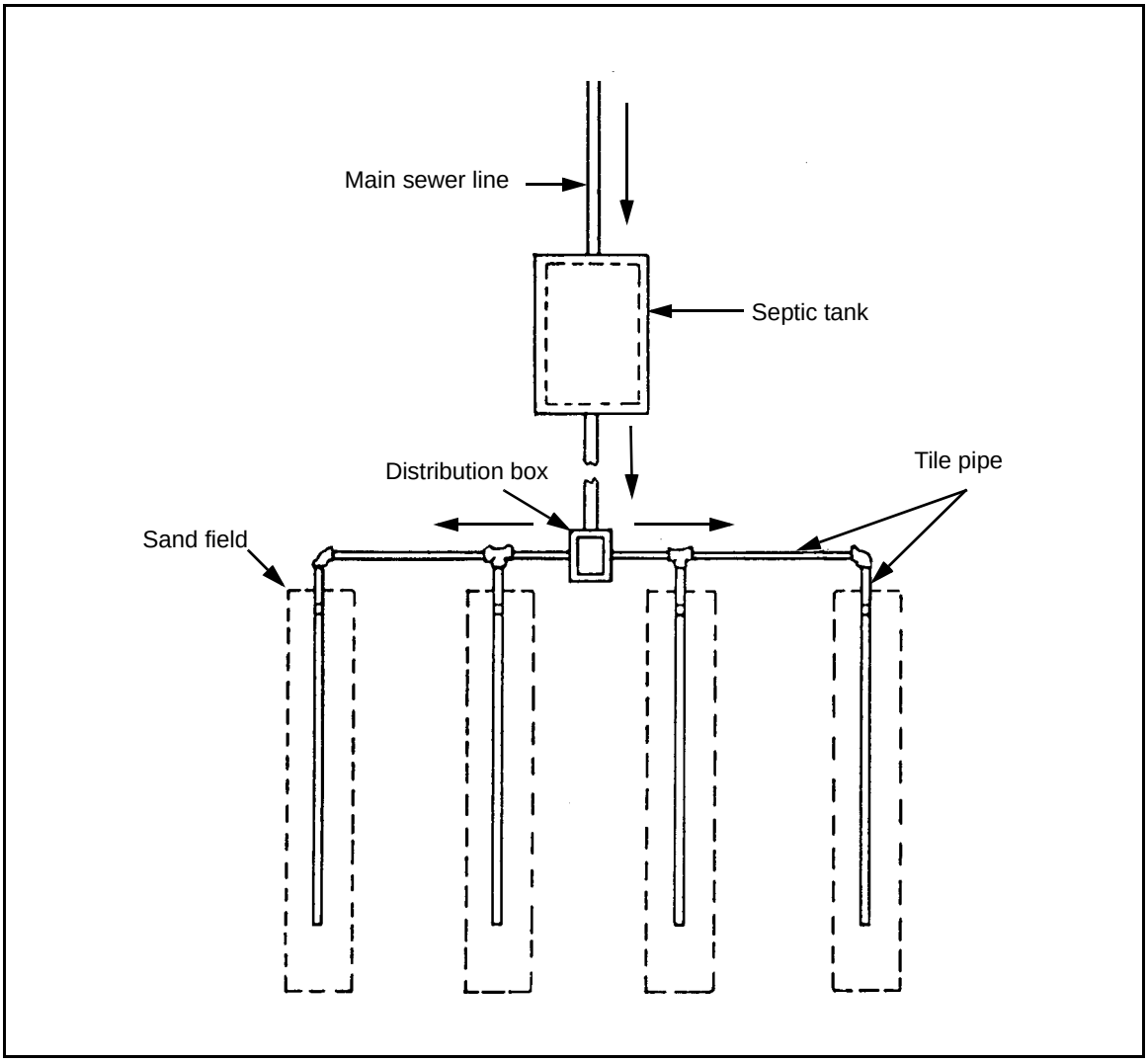

Figure 1-10. Small Sewerage System Plan

IMHOFF TANK

1-85. If a septic tank cannot handle the load, an Imhoff tank may be used. *Figure 1-11, page 1-24,* shows typical construction details. When a treatment plant is required, plans for a specific site should be prepared, taking into account soil conditions and features of the land's surface.

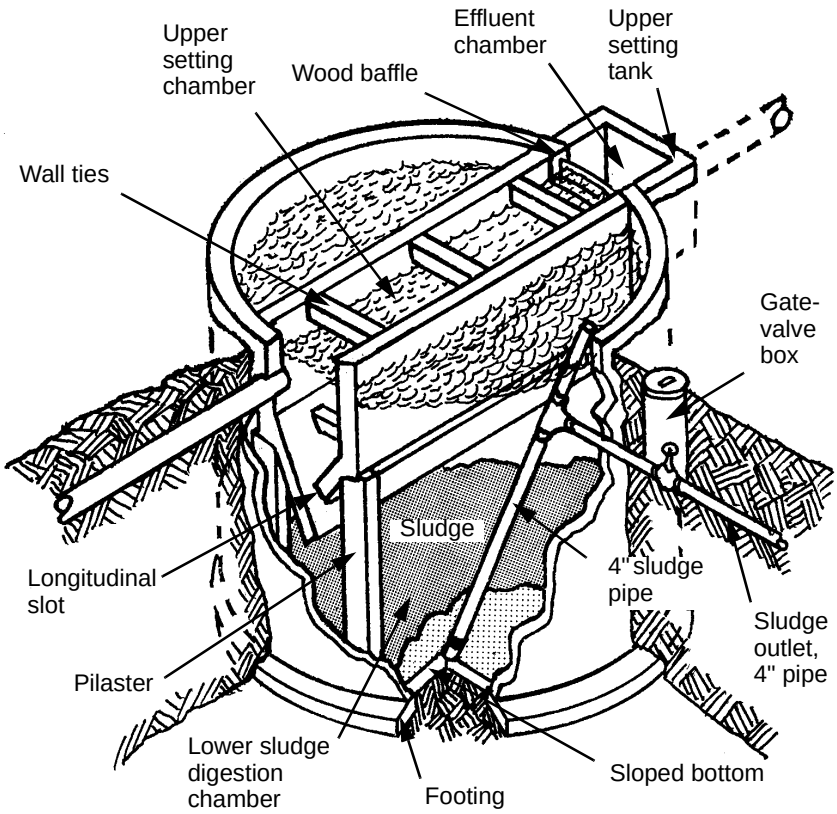

Figure 1-11. Cross Sections of an Imhoff Tank

SEWAGE DISPOSAL FACILITIES

DRAINAGE BED

1-86. The subsurface system is the most common type of drainage bed. A subsurface system is used where space and soil permit or where there is no stream or pond nearby. When laying the piping for a drainage bed consider the—

- Lay of the land (topography).
- Depth of the potable water supply.
- Location of surface lakes and streams.
- Type of soil.

1-87. For example, a subsurface irrigation system must handle 2,000 gallons per day (GPD), and the average time noted in the soil absorption test is 10 minutes. From *Table 1-7, page 1-26*, this corresponds to 1.7 GPD per square foot.

1-88. The length of piping in a subsurface drainage bed depends on the type of soil and the volume of liquid to be treated. This is determined by a soil percolation test *(paragraph 1-91)*. To compute the length of the drainage lines, an average percolation rate is used. *Table 1-7*, gives soil absorption rates of the drainage lines.

1-89. The solution would be (round up to the nearest 10 feet)--

$$\frac{2{,}000\ GPD}{1.7\ GPD/sq\ ft} = 1{,}180\ sq\ ft$$

1-90. If trenches are 18 inches wide (1.5 feet) (round up to the nearest 10 feet)--

$$\frac{1{,}180\ sq\ ft}{1.5\ sq\ ft} = 790\ ft\ of\ trench\ and\ pipe$$

1-91. Another factor of laying piping for a drainage bed includes performing a soil percolation test. Use the following steps to perform this test *(Figure 1-12, page 1-26)*:

Step 1. Dig at least six test holes, 1 foot square, to a depth equal of that of the planned drainage bed.

Step 2. Place a 2-inch layer of gravel in the bottom of the holes and fill the holes with water.

Step 3. Let the test holes stand overnight if the soil is tight or has a heavy clay content. If the soil is sandy and the water disappears rapidly, no soaking period is needed. Pour water into the holes to a depth of 6 inches above the gravel. The batter board acts as a reference line, and a ruler should be used to record the level of water in the hole below the batter board.

Step 4. Measure the water every 10 minutes over a 30-minute period. The drop in water level during the final 10 minutes is used to find the percolation rate of the soil.

- Soil that takes 30 minutes to absorb 1 inch of water needs 4 feet of drainage for each gallon of liquid.
- If a test hole needs more than 30 minutes to absorb 1 inch of water, the soil is not suitable for a subsurface-drainage system.

LEACHING TANKS

1-92. Leaching tanks and cesspools receive raw sewage or septic tank overflow. They can be made of 4- by 4-inch lumber or 5-inch round timber. Dry masonry may be used for wall construction when time and materials permit. *Figure 1-13, page 1-27,* shows the design for a small leaching tank.

SAND-FILTER FIELDS

1-93. Piping of surface irrigation and subsurface sand filter disposal systems is installed using plans and profiles. The plans and profiles are based on the

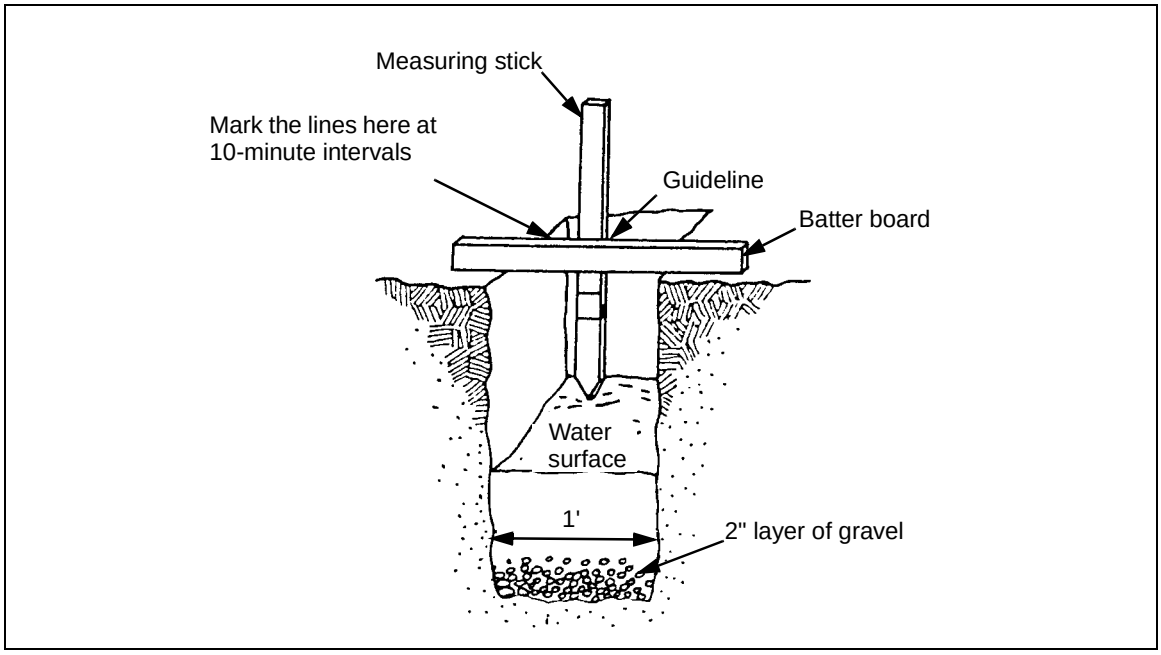

Figure 1-12. Soil Percolation Test

Table 1-7. Soil Absorption Rates of Drainage Lines

Absorption (GPD)		
Time Required for Water Level to Fall 1 Inch (in minutes)	**Per Square Foot of Trench Bottom in the Field**	**Per Square Foot of Percolating Area in a Leaching Tank**
1	4.0	5.3
2	3.2	4.3
5	2.4	3.2
10	1.7	2.3
30	0.8	1.1
60	0.6	0.8

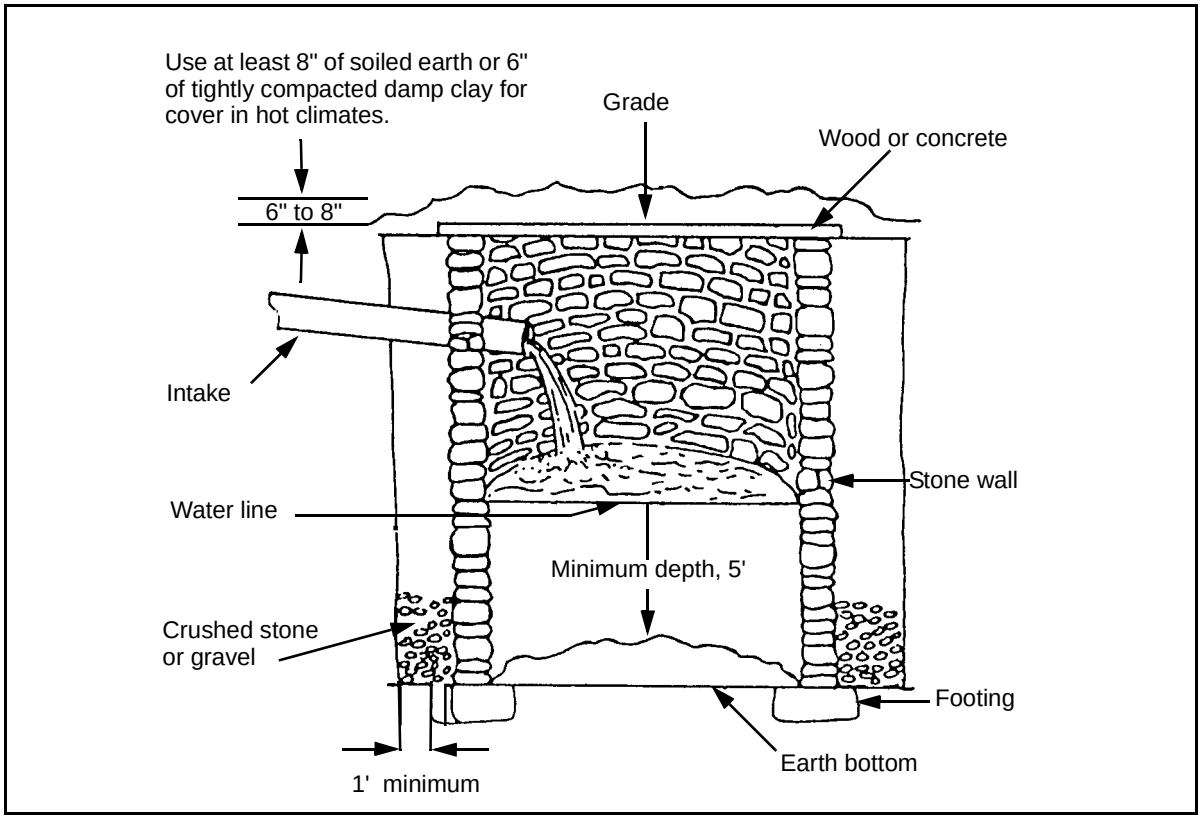

Figure 1-13. Design for a Leaching Tank

area topography and a soil percolation test. The small sewerage system shown in *Figure 1-10, page 1-23,* shows a sand filter field.

SECTION IV - WASTEWATER

1-94. Water usage generally results in wastewater that requires disposal. Depending on the source, wastewater may contain suspended solids and particulate matter, organic material, dissolved salts, biological and pathogenic organisms, and toxic chemicals. The volume of wastewater alone can cause significant problems in the field.

POLICY

1-95. Army policy directs that wastewater and waterborne wastes be collected and disposed of in a manner that protects water resources and preserves public health. These procedures must have a minimal impact on unit readiness. The Army is required to comply with federal, state, and local environmental pollution and wastewater laws on US territory. *(*For more information about US laws and regulations, refer to *Training Circular (TC) 5-400.)* While in other countries, units may have to comply with the host

nation's laws and procedures as determined by the theater commander. In a true contingency operation, the theater commander determines if local environmental laws apply in the area of operation. Regardless of laws and regulations, proper wastewater disposal is essential to protect the health of the force. Proper disposal prevents the contamination of water supplies and development of rodent and insect breeding sites. Large volumes of wastewater may impact on unit operations and help the enemy locate and identify the unit.

RESPONSIBILITIES

1-96. Units in the field are responsible for collecting and disposing of the wastewater they generate. Large-volume wastewater producers, such as hospitals, normally require engineer support. In the continental US (CONUS), this support usually comes from installation facility engineers. The preferred method for wastes disposal is through contractors when they are available. Theater combat engineers provide this support during deployments and contingency operations outside the continental US (OCONUS) when contractors are unavailable or when the mission dictates. In any event, the commander is responsible for coordinating proper wastewater disposal.

CONSIDERATION FACTORS

1-97. The method of wastewater collection, treatment, and ultimate disposal depends on a number of factors including the following:

- The volume and characteristics of the wastewater.
- Operational considerations (length of stay at a given site, intensity of combat and such).
- Geological conditions (terrain type, soil characteristics, and groundwater-table depth).
- Climatic conditions.
- Engineer support available.
- The accessibility of installation and fixed sewage collection, treatment, and disposal systems.
- The applicability of environmental regulations.

COLLECTION

1-98. Base camps produce significant volumes of wastewater in relation to the volume of water consumed. No definitive studies have been done to quantify the volume of wastewater generated by the various base camps. A conservative estimate for planning purposes is that about 80 percent of all water used for purposes other than human consumption ends up as wastewater. The largest volume of field wastewater is generated by laundries, showers, and kitchens. While this wastewater is not unique to base camps, it contributes to the total volume requiring collection and disposal.

FIELD SHOWERS

1-99. Field showers are generally collocated with a base camp to support both residents and transients. Quartermaster personnel operating the showers are responsible for collecting and disposing of shower wastewater. In some cases, this disposal may be in conjunction with that of the base camp. When possible, units should consider recycling shower and laundry water to reduce the volume requiring disposal.

FIELD LAUNDRIES

1-100. Field laundries may also be collocated within the base camp. They are the largest source of wastewater. As with showers, quartermaster personnel operating the laundries are responsible for wastewater collection and disposal. When possible, units should recycle laundry water to reduce the volume requiring disposal.

FIELD KITCHENS

1-101. The base camp's dining and food sanitation centers are a significant source of wastewater. In addition to volume, grease and particulate matter present a complicating factor. As such, grease traps must be constructed to remove food particles and grease before collecting and disposing of the wastewater. Design criteria for grease traps are outlined in *Section VIII, page 1-44*, of this chapter.

DISPOSAL

1-102. The wastewater disposal method depends on the factors listed in *paragraph 1-97, page 1-28*. The following options should be considered in each case:

- Connection to an established installation sanitary sewer system.
- Collection and retention of wastewater for engineer/contractor removal to a fixed treatment facility.
- Engineer construction of semipermanent wastewater collection and disposal systems.
- Use of a field expedient wastewater disposal system, if available.

FIXED FACILITIES

1-103. Existing installation disposal facilities should be used in most training scenarios in the CONUS. This also holds true for many noncombat operations outside the OCONUS, especially in developed countries. A point of contact (POC) should be established with the host nation, via joint task forces (JTF) or civil affairs. In some operations, preplanned base camp sites can take advantage of local sewer systems. Facility engineer assistance is needed to make the required connections and access the system. Pretreatment will not be required since the composition of wastewater is roughly equivalent to that of a fixed installation. Grease traps or filters may be required in areas, such as the dining-facility stream, to remove grease and particulate matter because they could affect the operation of the wastewater pumps.

1-104. If the installation sewer system is unavailable, collect the wastewater in containers, such as expandable pillow tanks or drums. The containers can be moved to a sewage-treatment plant or a sanitary sewer access by engineers or contractors. Storage containers, wastewater tank trucks, and pumps are not standard equipment so this option requires extensive prior planning and coordination.

1-105. Semipermanent collection, treatment, and disposal facilities may be possible in permanent training sites and preplanned deployment sites. Small package plants are also available as listed in the Army Facilities Components System (AFCS). Extensive construction engineer support is required to build and maintain such systems.

FIELD FACILITIES

1-106. Actual field expedient disposal methods may not be permitted in training areas in the CONUS or most developed countries. However, personnel must know how to construct and operate these field expedient methods with limited or nonexistent engineer support. Obviously, some engineer support is almost always needed. Earthmoving equipment may be necessary due to the volume of wastewater generated. This support must be included in site- preparation planning.

1-107. Traditional field expedient disposal methods consist of soakage pits, soakage trenches, and/or evaporation beds. The effectiveness of these methods depends on geological conditions, soil composition, and the climate. These devices, especially soakage pits, are generally constructed for small volumes of wastewater. With proper design and operation, they can be effective for larger volumes of watewater. Since these methods result in final disposal, some wastewater pretreatment may be necessary to remove grease, particulate matter, and organic material. Design and construction critera for these devices are outlined in *Section VIII, page 44*. Guidance is also available from supporting engineers and preventive-medicine personnel. These methods are generally appropriate for short periods only, so consider the alternatives in *paragraph 1-103, page 1-29* when occupying the same site for more than two weeks.

1-108. Soakage or evaporation may be impossible in arctic environments, or under certain geological or climatic conditions. The only alternative may be to collect wastewater in tanks or drums for removal by engineers or contractors. As in *paragraph 1-103*, this option requires extensive prior planning and coordination.

SECTION V - HUMAN WASTE

1-109. Proper human waste disposal (feces and urine) is essential to prevent the spread of diseases caused by direct contact, water contamination, or dissemination by rodents and insects. Proper disposal is critical because many disease organisms are transmitted through feces.

POLICY

1-110. Army policy directs that human waste be disposed of with good sanitary practices; and the Army must comply with federal, state, and local environmental laws for human waste. *(*For more information on US laws and regulations, see *TC 3-34.489 and FM 3-100.4.)* Few laws specifically address human waste disposal in the field; nevertheless, proper human waste disposal is essential and requires command emphasis at all levels.

RESPONSIBILITIES

1-111. At installation level, facility engineers are responsible for constructing, maintaining, and operating fixed sewage systems. Commanders are responsible for providing human waste disposal facilities in the field. Engineer support may be required to construct some types of field disposal devices.

FIELD EXPEDIENT FACILITIES

1-112. The type of field latrine selected for a given situation depends on a number of factors–the number of personnel, the duration of the stay at the site, and geological and climatic conditions. Preventive-medicine personnel and the unit's field sanitation team can help determine the right type, location, number, and size of latrines. Specific guidance on selecting and constructing field expedient facilities is discussed in *Section VII, page 1-34*.

1-113. The locations of base camp latrines are a compromise between the requirement for separation from dining facilities and water sources and convenience for personnel. Multiple latrine sites are clearly necessary for larger base camps. Sanitation and maintenance are critical to prevent disease transmission to and from personnel. An important factor is the requirement for hand-washing facilities adjacent to each latrine. Close and mark latrines according to the local policy and good field sanitation practices *(paragraph 1-132, page 1-35)*.

FIXED AND INSTALLATION FACILITIES

1-114. As discussed in *paragraph 1-102, page 1-29*, the construction and use of field expedient facilities may be prohibited. In such cases, the only option is to get support from the installation facility engineer and/or contractor.

1-115. The preferred option is to establish the base camp in an area with latrine facilities already in place and connected to a installation sewage system. This may be possible in permanent training areas or predesignated deployment sites. An alternate option is the engineer construction of a stand-alone sewage system and fixed latrines. Again, this may be possible in predesignated training areas or deployment sites.

1-116. An option commonly used is contract-supported latrine facilities. These include chemical toilets or self-contained vault toilets. The contractor is

responsible for emptying the contents on a scheduled basis. Contractors may be the only option available due to local regulations and policies.

SECTION VI - SOLID WASTE

1-117. The accumulation and disposal of solid waste is a major problem on the modern battlefield. Not only does the solid waste impact on military operations, it may also contribute to environmental contamination and it may serve as breeding sites for rodents and insects.

POLICY

1-118. Army policy directs that all solid and hazardous waste be disposed of in an environmentally acceptable manner. Disposal must be consistent with good sanitary engineering principles and mission accomplishment. The Army is required to comply with federal, state, and local requirements for the collection and disposal of solid waste. Most legislation is not specifically oriented toward a field environment. The Army adopts federal laws that deal with solid and hazardous wastes as explained in *TC 3-34.489 and FM 3-100.4*. The theater commander determines the applicability of both US and host-nation regulations and policies. Proper waste disposal is required to protect the health of the force.

RESPONSIBILITIES

1-119. Depending on the nature and volume of waste, generating units are generally responsible for its collection and disposal. Certain types of waste require special handling that may be beyond the unit's capability. Large waste generators, such as hospitals, may not have the resources or equipment to properly dispose of all the solid waste. In these cases, installation facility engineers or theater engineers are responsible for solid-waste disposal support.

DISPOSAL

1-120. Solid waste is not unique to the base camp. The primary sources of solid waste are routine troop-support, maintenance, and motor pool operations; administrative functions; and medical and dining facilities. A major effort must be made to reduce the amount of waste generated. This in turn will reduce the burden on disposal systems. Disposal methods depend on installation or host nation requirements. Most solid wastes can be transported to a disposal point in unit or contract vehicles. In most cases, the volume of waste alone is an operational concern. With prior approval, small amounts of some solid wastes may be burned using field expedient incinerators.

GENERAL WASTE

1-121. Wastes that are not specifically classified as petroleum,oils, lubricants (POL), hazardous, or medical waste are considered general waste. General wastes include—

- Paper and plastic products (the most abundant solid waste generated in the field).
- Food and garbage generated by dining facilities.
- Scrap material (wood, metal).

1-122. Special consideration must be given to rotting waste from dining facilities. It may not be hazardous or infectious, but it may present a serious aesthetic problem and become a breeding site for disease-carrying rodents and insects. Rotting waste must be removed and disposed of as soon as possible, especially in warmer weather. Burial, if permitted, must not be in the vicinity of the immediate base camp. General waste is normally disposed of through landfill operations. Installation facility engineers or theater engineers are responsible for constructing and operating these landfills.

POL WASTE

1-123. This waste consists of all used oil and POL products (including fuel and petroleum derivatives and asphalt products). The products may be classified as hazardous waste if they become mixed with water or soil. Products are separated and stored in appropriate containers and the containers are disposed of through contractors or retrograde operations.

HAZARDOUS WASTE

1-124. Certain types of solid waste (especially chemicals) are classified as hazardous waste. Examples include solvents, paints, and cleaners. These products require special handling, transportation, disposal, and documentation. Hazardous wastes are stored in appropriate containers, and the containers are disposed of through contractors or retrograde operations. Engineers and preventive-medicine personnel can provide guidance and assistance on hazardous-waste disposal. (See *TC 3-34.489 and FM 3-100.4* for more information on hazardous waste.)

MEDICAL WASTE

1-125. Medical waste is any waste that is generated by a health-care facility and that is capable of producing infectious diseases. For waste to be infectious, it must contain or potentially contain pathogens of sufficient quantity/ virulence to result in an infectious disease in a ssqle host. Medical wastes should be disposed of through contractors, but they can be incinerated in certain cases. (See *TC 3-34.489 and FM 3-100.4* for more information on medical waste.)

SECTION VII - HUMAN WASTE DISPOSAL IN THE FIELD

1-126. During wartime, commanders must exercise a high degree of resourcefulness. When adequate buildings and facilities are available, commanders must determine whether the added health benefits of using such facilities offsets tactical considerations. When adequate facilities are unavailable or the commanders choose not to use them, improvised facilities must be constructed to ensure the maintenance of proper sanitary standards. The devices discussed in this section can be simply constructed and they provide adequate sanitation.

CONSTRUCTING AND CLOSING LATRINES

1-127. The following general rules apply to constructing all types of latrines, except catholes *(paragraph 1-133)*.

LOCATION

1-128. To ensure that food and water are protected from contamination, latrines should be at least 100 yards from the dining facility and 100 feet from the nearest water source. Latrines should not be dug below the groundwater table or where they may drain into a water source. (The groundwater table can be determined from information given by local inhabitants or excavating to the groundwater table.) Latrines are usually built at least 30 yards from the end of the unit area but within a reasonable distance for easy access. They should be lighted at night if the military situation permits. If lights cannot be used, tie pieces of cord or tape to trees or stakes as guides to the latrines.

SCREENING

1-129. Place a canvas or brush screen around each latrine or enclose it in a tent. If possible, heat the shelter in cold climates. Dig a drainage ditch around the screen or tent to prevent water from flowing over the ground into the latrine. For fly control, spray the shelter with an insecticide twice a week. If fly problems persists, spray the pit contents and box interior twice a week with a residual insecticide.

HAND-WASHING DEVICE

1-130. Install a simple hand-washing device outside each latrine. The device should be easy to operate and have a constant supply of water. The importance of hand-washing devices must be given aggressive emphasis. Hands contaminated with fecal material are a common means of disease transmission.

POLICING

1-131. Police the latrines daily. Assign specific unit personnel the responsibility of ensuring that the latrines are properly maintained.

CLOSING

1-132. Close a latrine pit when it is filled to within 1 foot of the surface or when it is being abandoned. Remove the latrine box and close as follows:

- Fill the pit to the surface with successive, 3-inch layers of earth. Pack each layer down.
- Place a l-foot mound of dirt over the length of the pit to prevent fly pupa from getting out of the closed latrine.
- Place a rectangular sign on top of the mound. The sign should indicate the type of pit and the date closed; include the unit designation in nonoperational areas.

CATHOLE LATRINE

1-133. The simplest of all field human waste disposal devices is the cathole latrine *(Figure 1-14)*. This latrine is used by individuals on the march and patrol. It is also used in similar situations where latrine facilities are not available. A cathole latrine should be dug at least 1 foot wide and 1 foot deep. After use, replace and repack the soil.

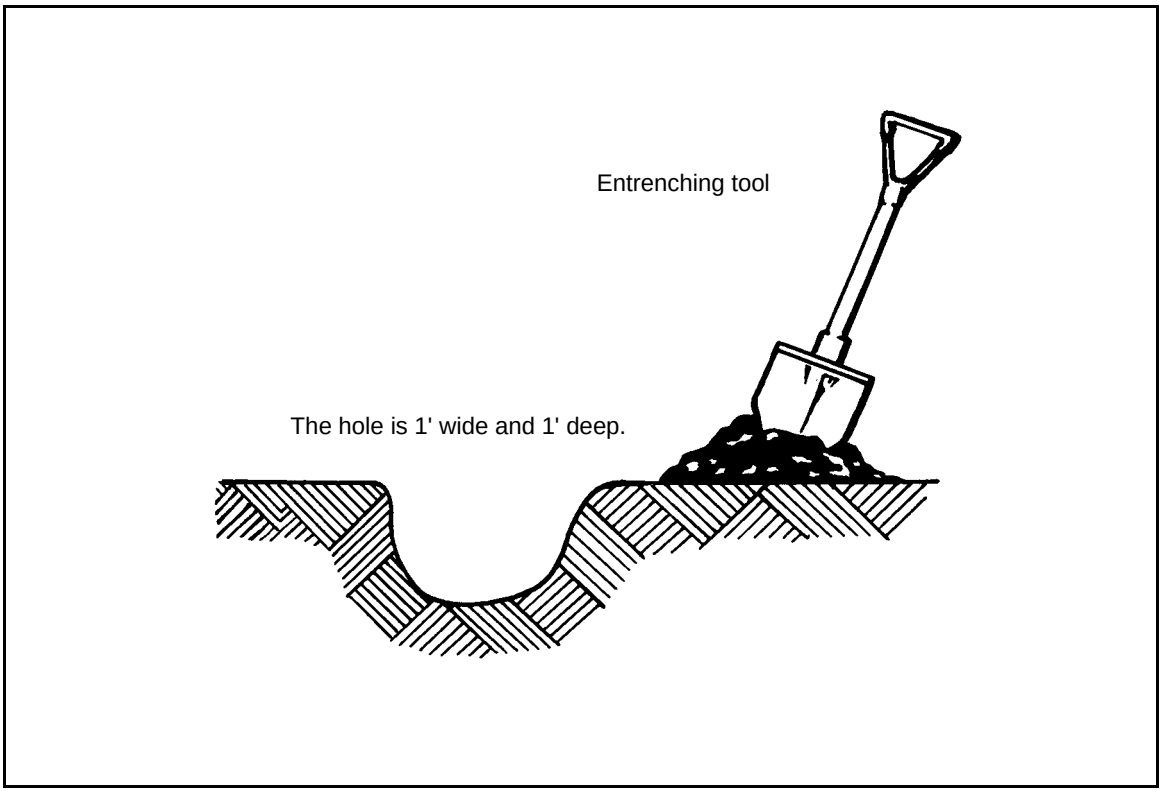

Figure 1-14. Cathole Latrine

STRADDLE-TRENCH LATRINE

1-134. The most common type of latrine for temporary (one to three days) bivouacs is the straddle-trench latrine *(Figure 1-15).* A straddle-trench latrine is dug 1 foot wide, 2 1/2 feet deep, and 4 feet long. It will accommodate two people at the same time. Provide straddle trenches to serve at least 4 percent of the unit's male strength and 6 percent of the female strength. Thus, for a unit of 100 men and 100 women, at least four latrines are needed for the men and six for the women. Place the trenches at least 2 feet apart. There are no seats with this type of latrine. Boards may be placed along both sides of the trench to provide better footing. Place toilet paper on a suitable holder. Protect it from bad weather by covering it with a tin can or other covering. Remove the earth and pile it at the end of the trench so that each individual can properly cover his excreta and toilet paper. Close the saddle-trench latrines as described in *paragraph 1-132, page 1-35*.

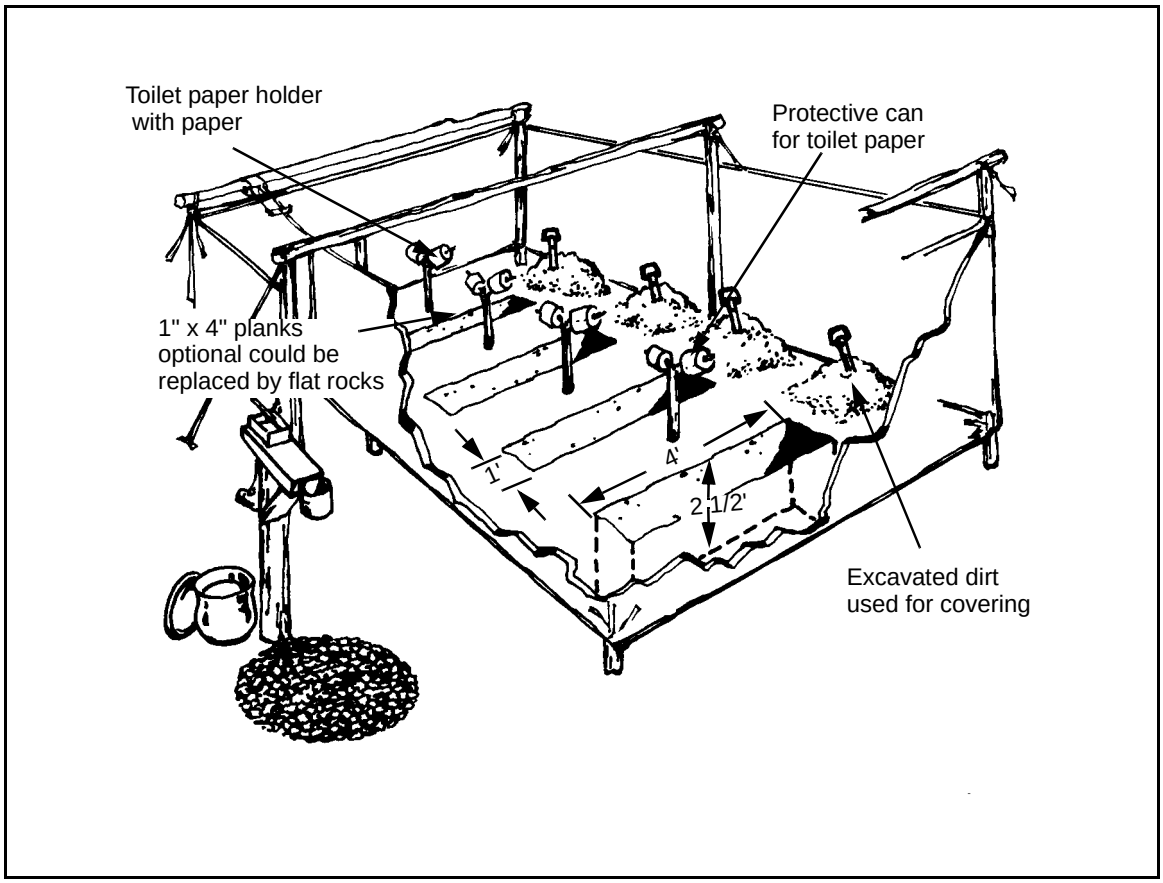

Figure 1-15. Saddle-Trench Latrine with a Hand-Washing Device

DEEP-PIT LATRINE

1-135. The deep-pit latrine is used with a latrine box *(Figure 1-16).* The standard latrine box has four seats, and is 8 feet long and 2 1/2 feet wide at the base. A unit of 100 men requires two four-seat latrine boxes. Cover the

holes with flyproof, self-closing lids. Flyproof the cracks with strips of wood or tin. Place a metal deflector (can be made with a flattened can) inside the front of the box to prevent urine from soaking into the wood.

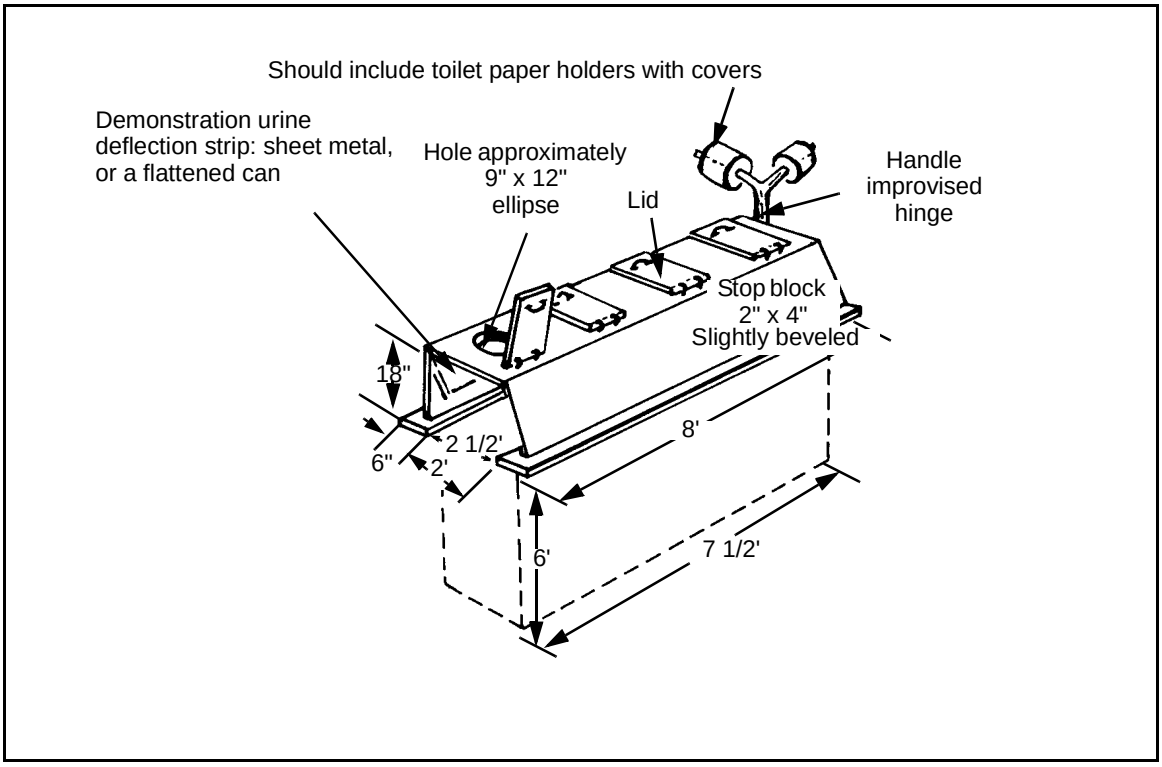

Figure 1-16. Deep-Pit Latrine

1-136. Dig the pit about 2 feet wide and 7 1/2 feet long. This will give the latrine box 3 inches of support on all sides. The depth of the pit depends on the estimated length of time the latrine is to be used. As a rough guide, allow a depth of 1 foot for each week of estimated use, plus 1 foot for the dirt cover when closed. Rock or high groundwater levels often limit the depth of the pit, but it should be no deeper than 6 feet. Support may be needed in some types of soil to prevent the sides from collapsing. If so, use planking or a similar material. Pack the earth tightly around the bottom edges of the box to seal any openings through which flies might enter.

1-137. To prevent flies from breeding and to reduce odors, keep the latrine box clean, the seat lids closed, and the cracks sealed. Maintain a good fly control program in the area. Applying lime to the pit contents or burning it does not effectively control flies or odor. Scrub the box and latrine seats with soap and water daily. Close deep-pit latrines as described in *paragraph 1-132, page 1-35*.

BORED-HOLE LATRINE

1-138. A bored-hole latrine consists of a hole that is about 18 inches in diameter and 15 to 20 feet deep. It is covered by a one-hole latrine box

(Figure 1-17). The actual diameter is not critical, so make it as large as available augers permit. Sink a covered metal drum into the ground for use as a box. Remove both ends of the drum. Make a flyproof seat cover with a self-closing lid to fit the top of the drum. If a drum is not available, construct a flyproof, wooden box that is 18 inches high. A bored-hole latrine is satisfactory for small units.

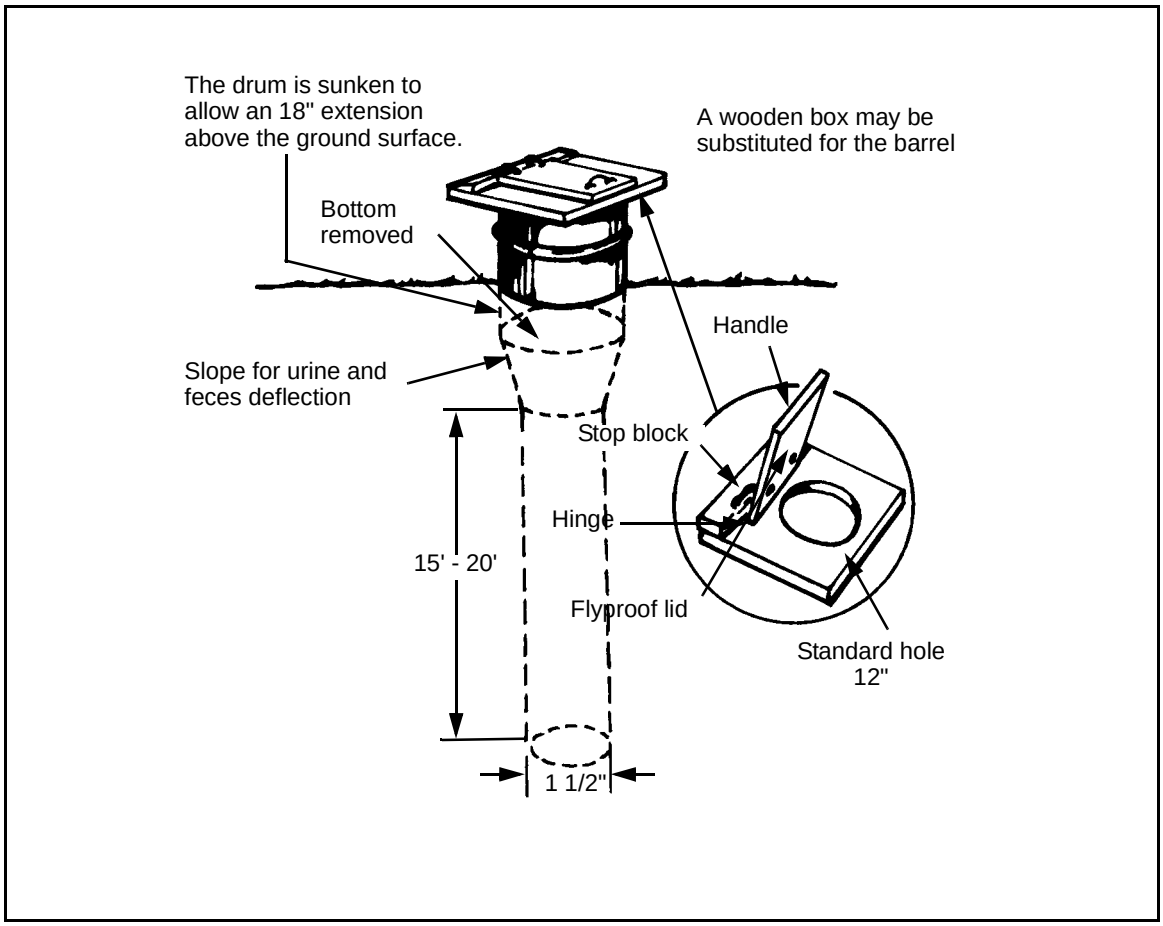

Figure 1-17. Bored-Hole Latrine

LATRINES IN AREAS WITH HIGH GROUNDWATER TABLES

1-139. The following latrines are limited to areas where the groundwater table is deep enough to prevent groundwater contamination or water standing in the latrine pit. They are also limited to areas that are free of impervious rock formations near the surface. Several alternatives are available for locations where a high groundwater table or a rock formation near the surface prevents digging a pit of adequate depth.

MOUND LATRINE

1-140. A dirt mound makes it possible to build a deep-pit latrine without the pit extending into water or rock *(Figure 1-18)*. Construct a mound of earth

that is at least 6 feet wide and 12 feet long. It must be able to support a four-hole latrine box. The mound should be high enough to meet the pit's depth requirement. Allow 1 foot from the base of the pit to the water or rock level. Break up or plow the area where it is to be placed to aid in seepage of liquids from the pit. If timber is available, build a crib of desired height to enclose the pit and support the latrine box. Build the mound and compact it in successive l-foot layers to the top of the crib as shown in *Figure 1-18*. Roughen the surface of each layer before adding the next. If timber for a crib is unavailable, construct the mound to the desired height in l-foot layers as described and dig the pit into the mound. It may be necessary to brace the walls with wood, sandbags, or other material to prevent them from collapsing. Flyproof and enclose a mound latrine the same as a deep-pit latrine *(paragraphs 1-135, 1-136,* and *1-137, pages 1-36* and *1-37).*

NOTE: The size of the mound base depends on the type of soil in the area. Make the mound larger if the slope is steep. Also, it may be necessary to build steps up a steep slope.

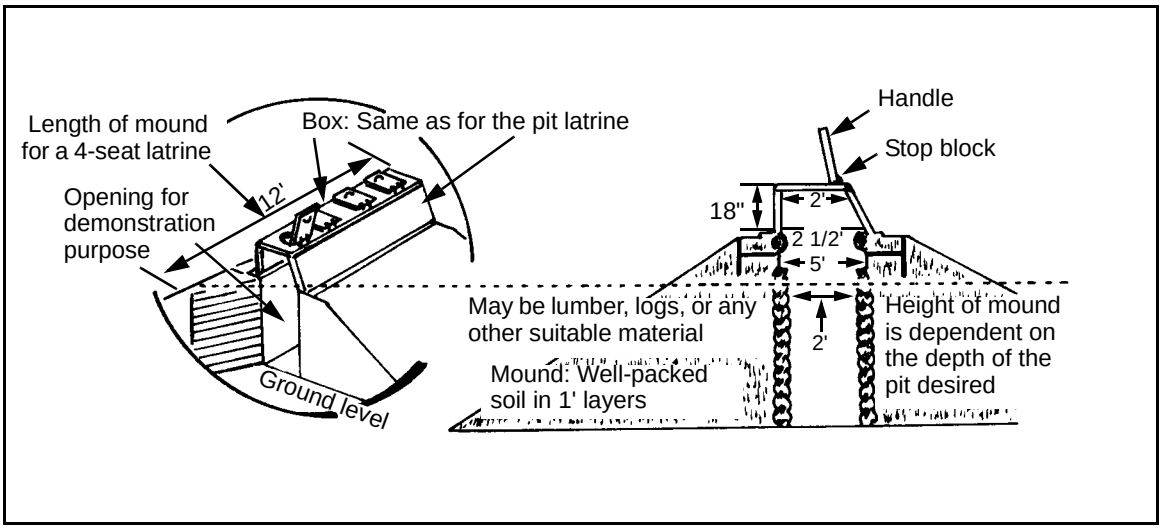

Figure 1-18. Mounded Latrine

BURN-OUT LATRINE

1-141. A burn-out latrine is particularly suitable for jungle areas with high groundwater tables *(Figure 1-19, page 1-40)*. It has been extremely useful in the past. Ensure that the burning location is downwind of the base camp. For a unit of 100 men and 100 women, at least eight men's latrines and eight women's latrines are needed.

1-142. Place a 55-gallon drum in the ground. Leave enough of the drum above the ground for a comfortable sitting height. The drum may be cut in half, making two latrines of less capacity. Place a wooden seat with a flyproof, self-closing lid on top of the drum. Weld handles to the sides of the drum, allowing two men to carry the drum with ease, because it must be moved before the contents are burned out. Have two sets of drums, if possible, so one set can be used while the other set is being burned out. Encourage male

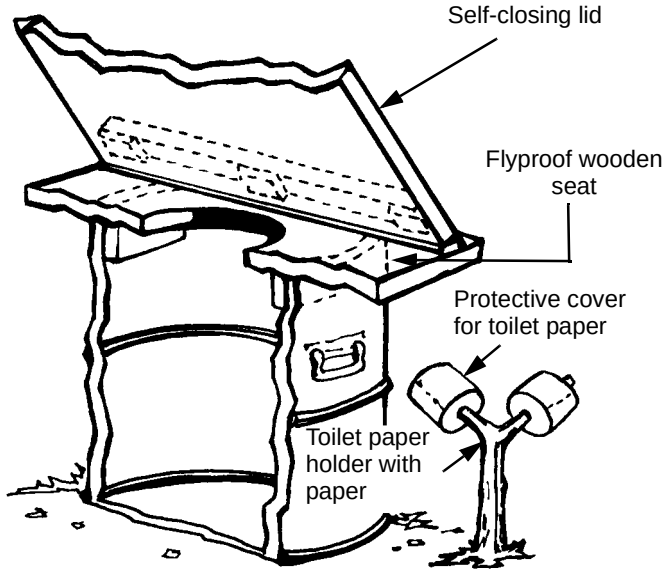

Figure 1-19. Burn-Out Latrine

personnel to urinate in a urine disposal facility *(paragraph 1-145)* rather than a burn-out latrine because more fuel is required to burn out a latrine with a liquid content.

1-143. Burn out the latrine daily by adding sufficient fuel to incinerate the fecal matter. Do not use highly volatile fuel because of its explosive nature. A mixture of 1 quart of gasoline to 5 quarts of diesel oil is effective; nevertheless, use it with caution. Burn the contents again if they are not rendered dry and odorless in one burning. Bury the residual ash.

PAIL LATRINE

1-144. Build a pail latrine when conditions (populated areas, rocky soil, marshes) are such that a latrine cannot be dug *(Figure 1-20)*. Construct a standard latrine box according to *paragraphs 1-135, 1-136,* and *1-137, page 1-36* and *1-37*. Place hinged doors on the rear of the box. Add a floor and place a pail under each seat. Position the box to form a part of the outer wall if the box is located in a building. Ensure that the rear of the box opens directly to the outside of the building. The box should be flyproof, and the seats and rear doors should be self-closing. Construct the floor of the box with an impervious material (concrete, if possible), and allow enough slope toward the rear to facilitate rapid drainage of washing water. Install a urinal in the male latrine with a drainpipe leading to a pail outside and enclose the pail in a flyproof box. Clean pails at least once daily. Bury or burn the contents or dispose of them by another sanitary method. Plastic liners for the pails reduce the risk of accidental spillage. Tie the filled bags at the top before disposal.

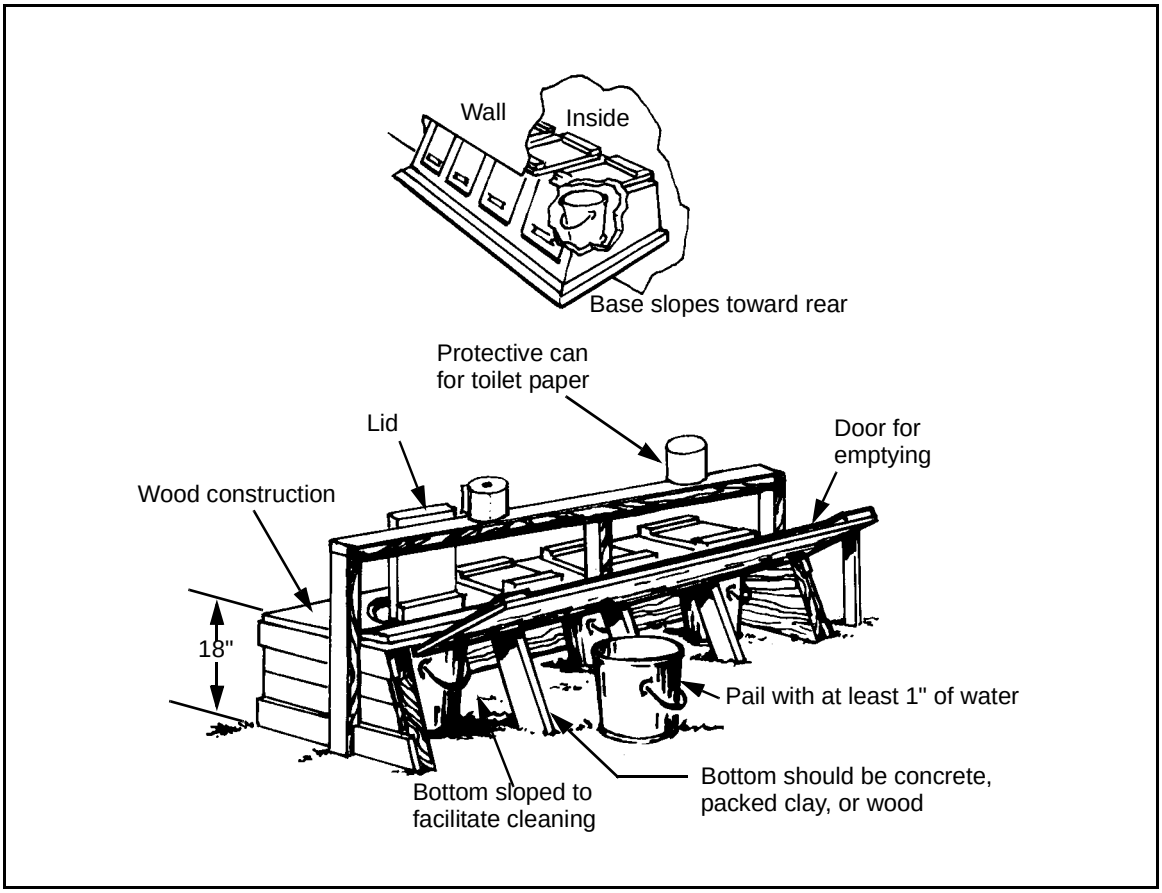

Figure 1-20. Pail Latrine

URINE DISPOSAL FACILITIES

1-145. In permanent and semipermanent camps, urine disposal facilities are usually connected to the sewer system. In the field, separate devices for urine disposal may be necessary. Collocate such facilities in the male latrines to minimize fouling of seats. At least one urine disposal facility is required for each male latrine or per 100 personnel.

URINE SOAKAGE PIT

1-146. The best device for urine disposal in the field is a urine soakage pit *(Figure 1-21, page 1-42)*. Dig the pit 4 feet square and 4 feet deep. Fill it with an aggregate material. Lay a border along each edge so that each side of the soakage pit's surface is 5 feet long. The border should be 6 inches wide, 4 inches deep, and composed of small stones. Depending on available materials, use either pipe urinals or trough urinals with this pit. An optional feature is the ventilating shafts with screened openings that extend from about 8 inches above the pit to within 6 inches of the bottom of the pit.

NOTE: A soakage trench *(paragraph 1-156, page 1-45)* may be used when the groundwater table or a rock formation precludes digging a standard urine soakage pit.

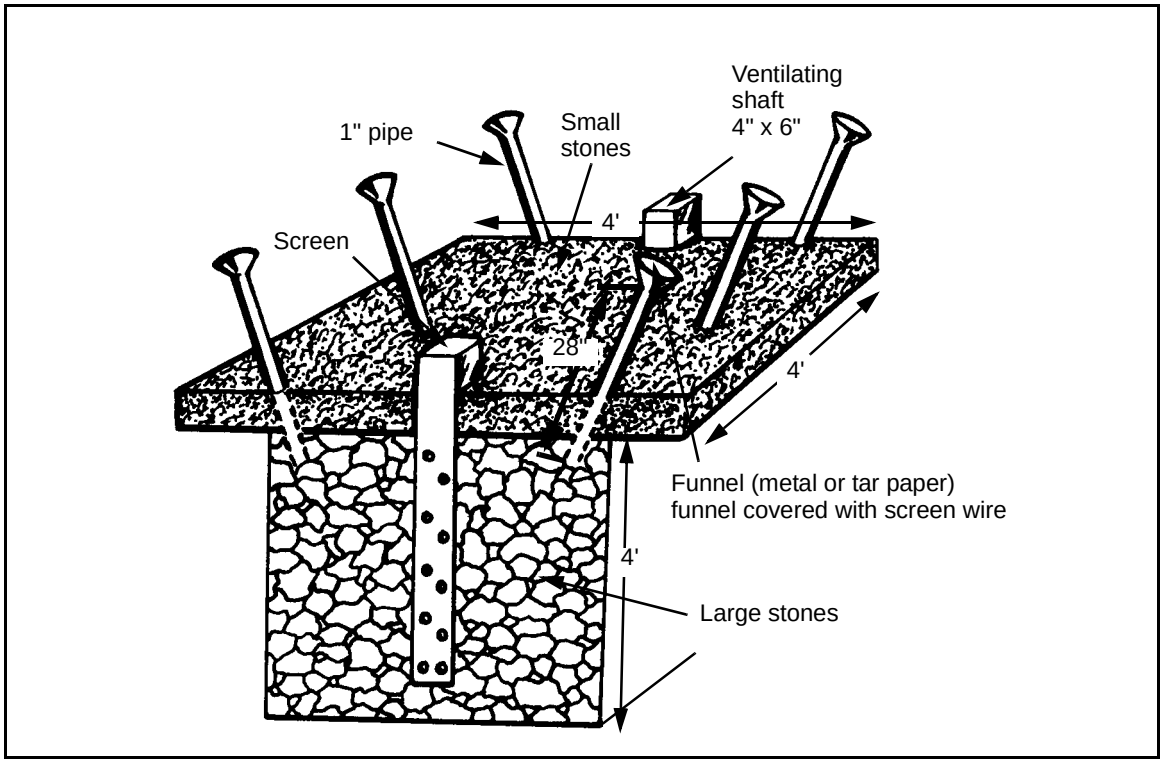

Figure 1-21. Urine Soakage Pit with Pipe Urinals

1-147. Pipe urinals should be at least 1 inch in diameter. Place them at an angle near each corner of the pit and, if needed, on the sides halfway between the corners *(Figure 1-21)*. The pipes should extend at least 8 inches below the surface of the pit. Place a funnel made of tar paper, sheet metal, or similar material in the top of each pipe. The upper rim of the funnel should extend about 30 inches above the ground surface.

TROUGH URINALS

1-148. If materials are available and more permanent facilities are desired, build a trough urinal *(Figure 1-22)*. The trough is U- or V-shaped and made of sheet metal or wood. If the trough is made of wood, line it with heavy tar paper. The four troughs forming the sides should be no more than 4 1/2 feet long when they are used with a soakage pit and an apron. Each trough should slope slightly toward one corner where a pipe carries the urine to the soakage pit.

URINAL

1-149. The urinal represents a further modification for more permanent installation *(Figure 1-23, page 1-44)*. Simply described, it is a 55-gallon drum

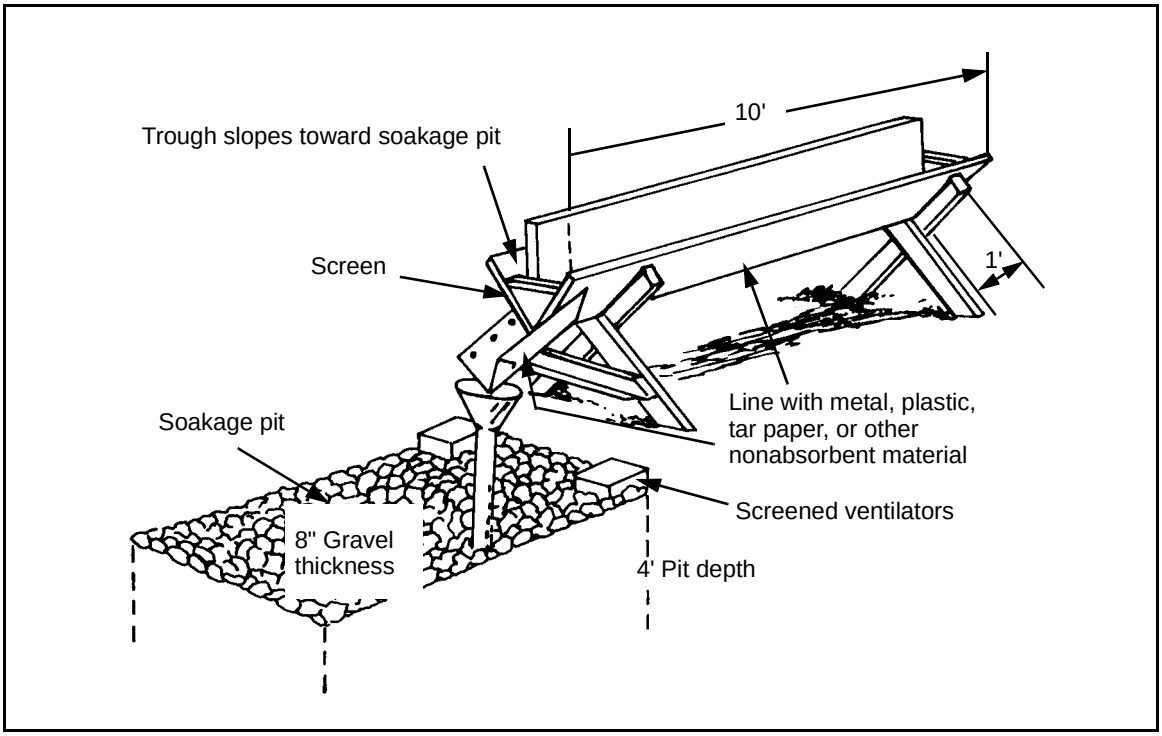

Figure 1-22. Trough Urinal

containing oil that is placed over a recessed soakage pit, thus the name, *urinoil*. Waste POL can be used; but vegetable oil is preferred. Urine voided through the screen immediately sinks through the oil to the bottom of the drum. The action of the urinal is somewhat like that of a barometer. As more urine is added, the oil level rises in the 3-inch pipe. This continues until it reaches the 1 1/2-inch notch on the overflow pipe in the center of the drum. Atmospheric pressure and the weight of the oil causes the urine to overflow until equilibrium is reestablished in the drum. The oil acts as an effective seal against odors and flies. The screen is easily lifted with attached hooks for removal of debris. The urinal will operate in place as long as the soakage pit will accept the urine.

MAINTENANCE OF URINE DISPOSAL FACILITIES

1-150. To ensure proper operation of latrine facilities—

- Urinate in the trough or the pipe, not directly on the pit's surface.
- Wash funnels and troughs with soap and water daily.
- Replace funnels when necessary.
- Prevent oil or grease from getting into the pit because they may clog it, and oil leeching through the pit may also contaminate the groundwater.

1-151. If the latrine is located some distance from sleeping areas, place a large can or pail at a convenient location for use as a urinal at night. Empty the can into the soakage pit every morning, and wash the pail with soap and water before reusing it.

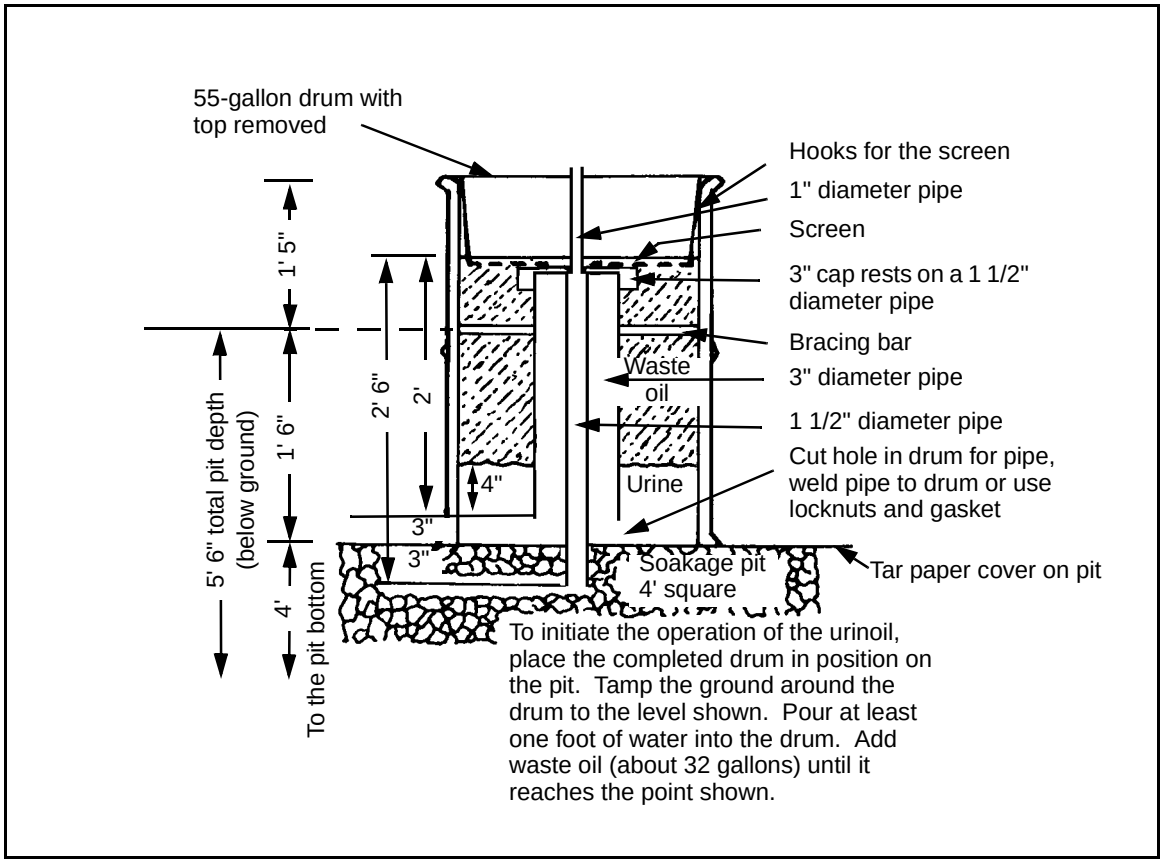

Figure 1-23. Urinal

1-152. When a urine soakage pit is abandoned or becomes clogged, spray it with insecticide. Mound it over with a l-foot covering of compacted earth. Place a rectangular sign on the mound indicating the type of pit and the date closed.

SECTION VIII - WASTEWATER DISPOSAL IN THE FIELD

KITCHEN WASTE

1-153. Wastewater from food service operations contains food particles, grease, and soap. Consequently, kitchen waste requires treatment before disposal.

GREASE TRAPS

1-154. In permanent or semipermanent camps, kitchen waste is passed through a grease trap. Afterwards, it is drained into a wastewater collection system. In temporary base camps, however, the soil absorbs kitchen waste. Install grease traps *(paragraph 1-157, page 1-46)* to remove the grease from

the liquid to prevent clogging the soil and stopping absorption. Clean the grease traps frequently and, if permitted by federal and state regulations, burn or bury the removed grease. If not permitted, follow local procedures and unit standing operating procedures (SOPs) for proper disposal.

SOAKAGE PITS

1-155. In temporary base camps, a kitchen soakage pit is constructed like a urine soakage pit *(paragraph 1-146, page 1-41)*. It will normally dispose of liquid kitchen waste for a total of 200 persons. A grease trap is substituted in the kitchen waste soakage pit for the pipes or troughs in the urine soakage pit. If the camp is to last for several weeks, construct two kitchen waste soakage pits and alternate their usage on a daily basis. A rest period helps to prevent clogging. A clogged soakage pit will not accept liquid, and it must be properly closed. To close a kitchen pit, backfill and compact with soil 1 foot above the grade and mark the pit according to *paragraph 1-132, page 1-35*.

SOAKAGE TRENCHES

1-156. Use a soakage trench when the groundwater level or a rock formation precludes digging a pit. The trench consists of a pit, 2 feet square and l foot deep. The pit has a trench radiating outward from each side for a distance of 6 or more feet *(Figure 1-24)*. Dig the trenches 1 foot wide, varying the depth from 1 foot at the center to 1 1/2 feet at the outer ends. Fill the pit and trenches with material similar to that used in the soakage pit. Build two units for every 200 persons fed and alternate their usage on a daily basis. Use a grease trap with the soakage trench, and close it according to *paragraph 1-132*.

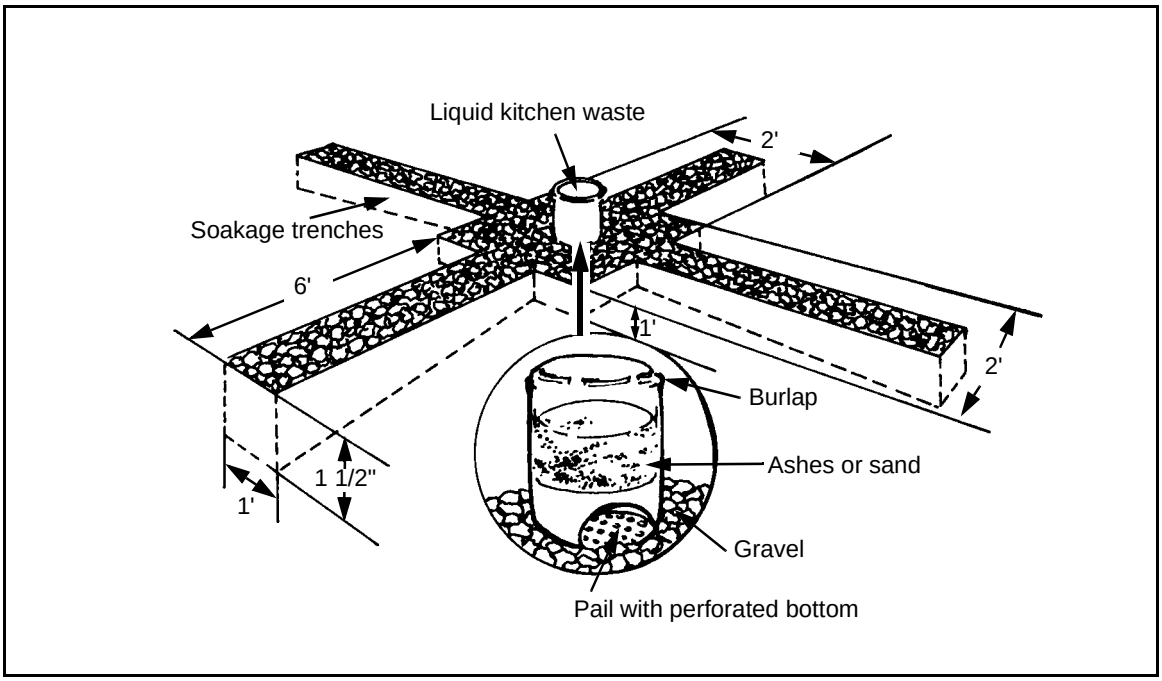

Figure 1-24. Soakage Trench with Barrel-Filter Grease Trap

GREASE TRAPS

1-157. A grease trap should be large enough to prevent the addition of hot, greasy water from heating the cool water already in the trap. Otherwise, grease will pass through the trap instead of congealing and rising to the top of the water. A grease trap should be provided for each soakage pit except those under showers.

BAFFLE GREASE TRAP

1-158. A baffle grease trap is constructed from a 55-gallon drum or box *(Figure 1-25)*. The box or drum is divided vertically into unequal chambers by a wooden baffle. This baffle should extend to within 1 inch of the bottom.

1-159. Waste is poured through a strainer into the large chamber. It then passes under the baffle and flows out into the small chamber. In the large chamber, the trap should have a removable lid and a strainer. The strainer may be a box with openings in the bottom. Fill the strainer with straw or burlap to remove coarser solids. Clean the strainer frequently by scrubbing it with soap and water to prevent clogging. Insert a 1-inch pipe, 3 to 6 inches below the top of the smaller chamber to carry liquid from the trap to the soakage pit. Clean the trap frequently to ensure proper operation. Remove the grease, drain the trap, and remove the sediment from the bottom. Burn or bury the grease, sediment, and strained material.

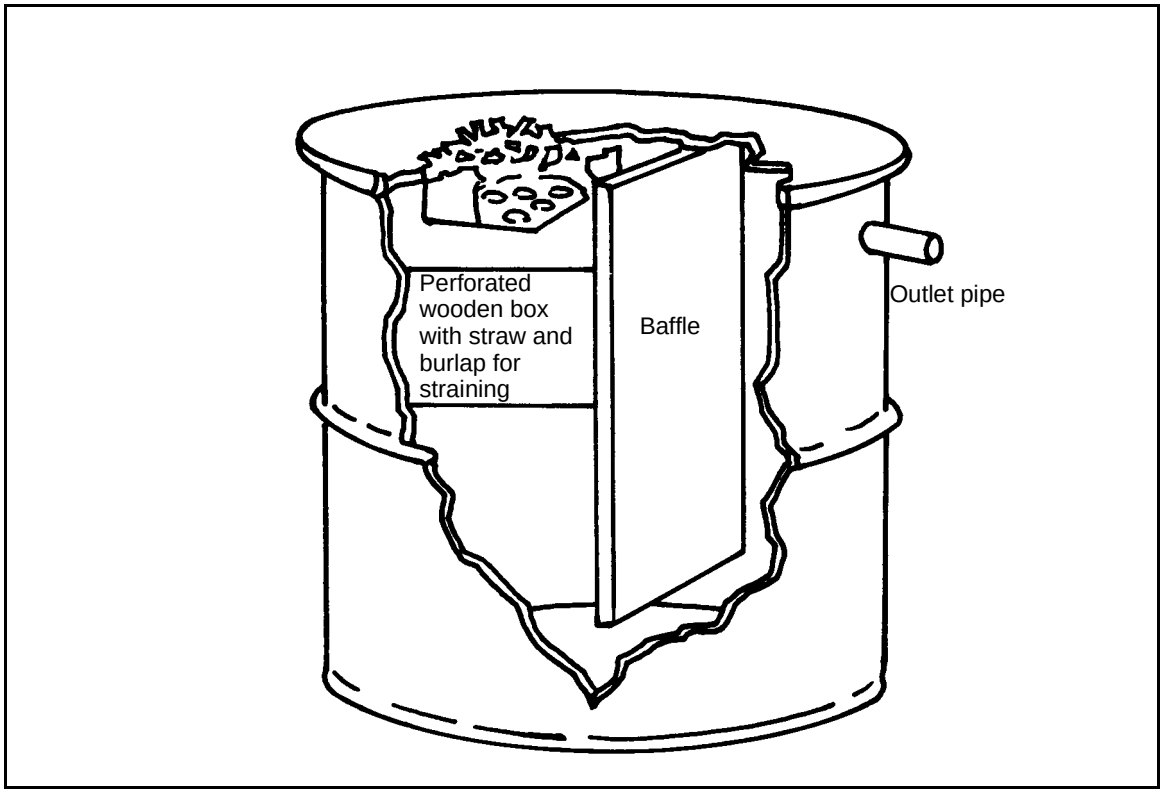

Figure 1-25. Baffle Grease Trap

BARREL-FILTER GREASE TRAP

1-160. The barrel-filter grease trap is constructed from a 30- to 50-gallon barrel or drum *(Figure 1-26)*. Remove the barrel top and bore a number of large holes into the bottom. Place 8 inches of gravel or small stones in the bottom of the barrel and cover them with 12 to 18 inches of wood ashes or sand. Fasten a piece of burlap to the top of the barrel to serve as a coarse strainer. Place the trap directly over the soakage pit or on a platform with a trough leading to the pit. If the trap is placed over the pit, remove the bottom instead of boring holes into it. Empty the trap every two days. Wash the trap, remove and bury the ashes or sand, and refill the trap with fresh ashes or sand. Wash the burlap strainer every day or replace it.

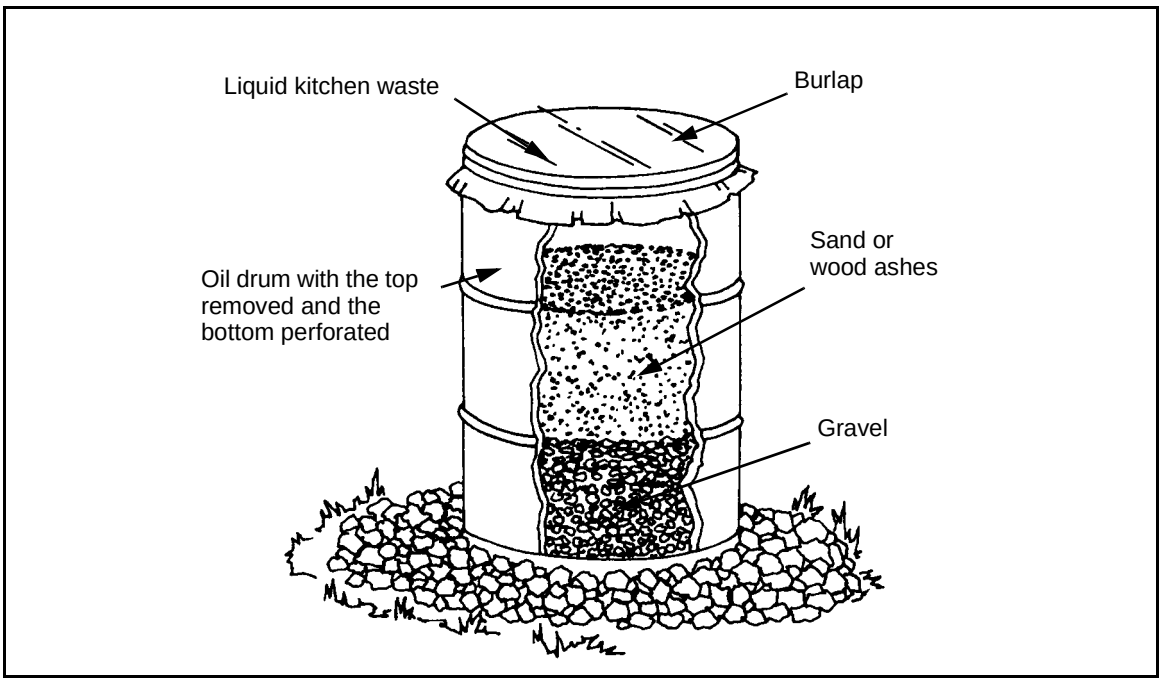

Figure 1-26. Barrel-Filter Grease Trap

EVAPORATION BEDS

1-161. Evaporation beds may be used in hot, dry climates *(Figure 1-27, page 1-48)*. They may also be used where clay soil prevents the use of standard soakage pits. Evaporation beds configured in three tiers, can be used when confined by available acreage *(Figure 1-28, page 1-48)*.

1-162. Evaporation beds measure 8 by 10 feet. Construct sufficient beds to allow 3 square feet per person per day for kitchen waste and 2 square feet per person per day for wash and bath waste. Space the beds so that the waste can be distributed to any one of the beds. Scrape the top soil to the edges, forming a small dike around the bed. Spade the earth in the bed to a depth of 10 to 15 inches. Rake it into a series of rows with the ridges approximately 6 inches above the depression. Form the rows either lengthwise or crosswise, depending on which one allows for the best water distribution.

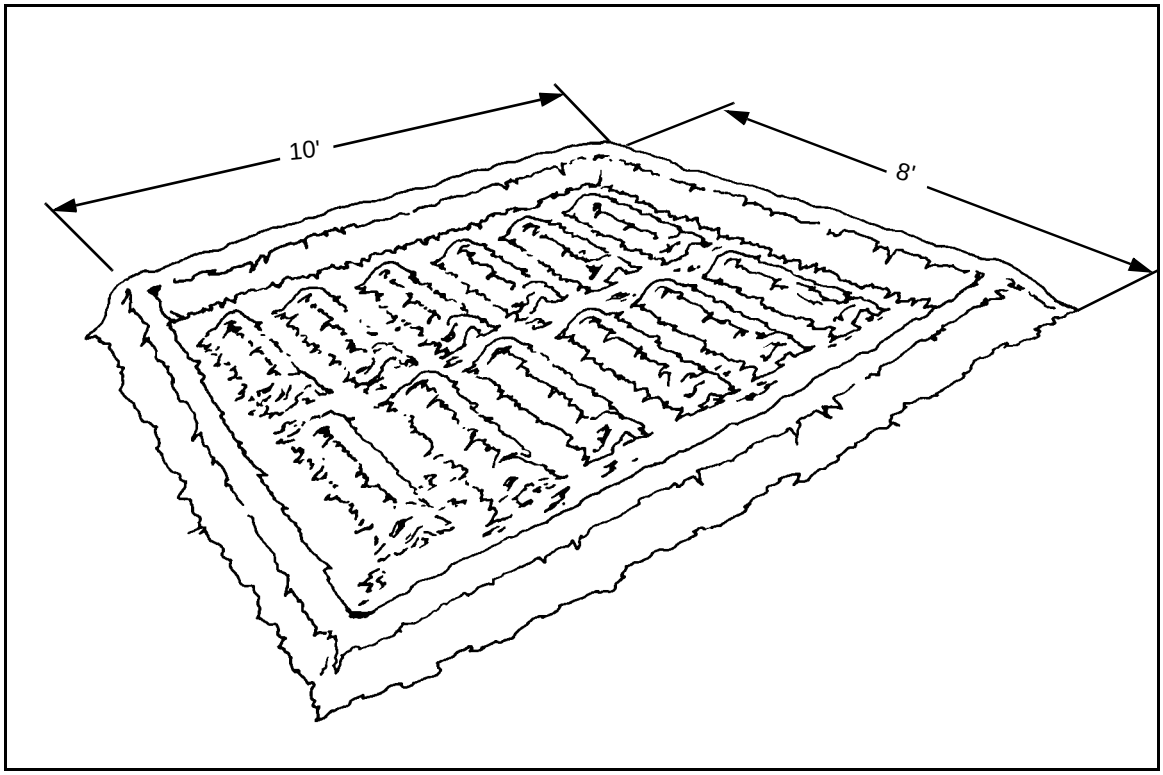

Figure 1-27. Evaporation Bed

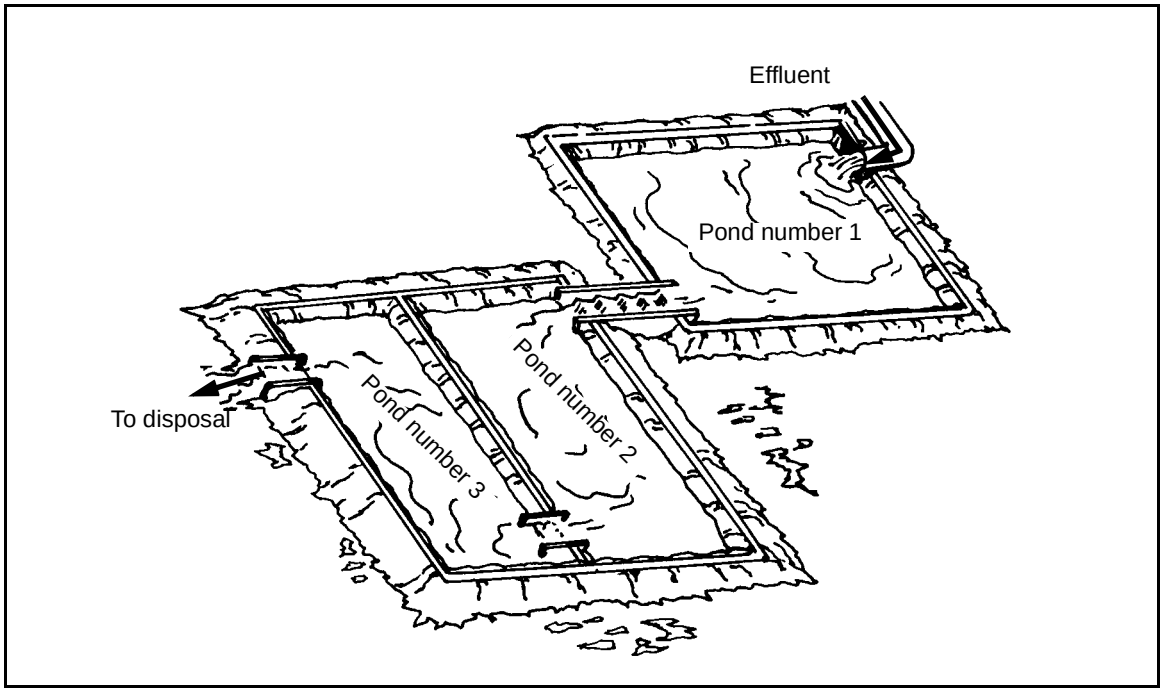

Figure 1-28. Three-Tier Evaporation Beds

1-163. During the day, flood one bed with liquid waste to the top of the ridges. This is equivalent to an average depth of 3 inches over the bed. Allow the liquid waste to evaporate and percolate. After three or four days, the bed is usually sufficiently dry for respading and reforming. Flood the other beds on successive days and follow the same sequence of events.

1-164. Give careful attention to proper rotation, maintenance, and dosage. It is essential that kitchen waste be run through an efficient grease trap *(paragraph 1-157, page 1-46)* before putting it in an evaporation bed. If used properly, evaporation beds create no insect hazard and only a slight odor. Other waste disposal methods are possible if they are more adaptable to the particular situation.

WASTEWATER

1-165. Every device used for washing or drinking should have a soakage area. Soakage areas prevent pools and mud from forming. Excavate the area under and a few inches around hand-washing devices, wash racks, and lister bags. Fill the areas with small, smooth stones to form a soakage pit. Ensure that wastewater from wash racks is passed through a grease trap before it enters a soakage pit or trench. Each field shower only requires a soakage pit or trench.

DESIGN CONSIDERATIONS

1-166. The general considerations discussed in previous sections can be used for design purposes of company-sized or smaller elements. For larger base camps, the number of waste facilities would become excessive when using these general rules of thumb. Design waste facilities to suit the needs of the base camp to be established.

1-167. The amounts of wastewater generated by laundry, bath, and kitchen activities are directly related to the water-consumption planning factors for each facility. For bath and laundry facilities, waste disposal systems should be designed to handle 100 percent of the flow to that facility, since practically everything that flows into these facilities flows back out. Waste disposal systems for kitchen facilities should be sized to handle 70 percent of the design flow to these facilities, since part of the water is consumed within the facility.

1-168. Liquid waste from all these facilities should be discharged into a sewer pipe. For most theater facilities, a 6- to 12-inch plastic pipe placed at a 2 percent slope will suffice. The pipe should be buried, if possible, with minimum cover depending on the traffic in the area. The sewer pipe must empty its contents somewhere. In developed countries, a complete underground, waterborne sewerage system may be feasible and can possibly be connected to the host nation's main sewer system. However, several theater base camps are being constructed in undeveloped countries where no sewage system currently exists. In this case, base-camp design and construction must include waste treatment and disposal facilities. While an underground septic tank with a tile drain field is normally ideal, the amount of construction effort and materials required may make it unfeasible. If there

are no waterborne toilets in the system, soakage pits or evaporation beds will usually be sufficient to handle the effluent from the laundry, bath, and kitchen facilities.

PERCOLATION TEST

1-169. Before designing a wastewater system, determine the absorption capability of the soil at the site. This is done by conducting a percolation test as follows:

Step 1. Dig one or more holes 1 foot square by 1 foot deep.

Step 2. Fill the test hole(s) with water and allow it to seep into the surrounding soil.

Step 3. Refill the hole(s) to a depth of at least 6 inches while the bottom of the hole is still wet.

Step 4. Measure the depth of the water and record the time it takes for all of it to be absorbed into the soil.

Step 5. Calculate the time required for the water level to drop 1 inch.

Step 6. Use the time from step 5 to determine the application rate from *Table 1-8 or Table 1-9*. *Table 1-8* is used for surface evaporation beds and *Table 1-9* is used for seepage or soakage trenches.

NOTE: If the percolation rate exceeds 60 minutes, the soil is not suited for a seepage pit. A percolation rate over 30 minutes indicates borderline suitability for soil absorption, and other methods of wastewater disposal should be considered.

Table 1-8. Application Rate for Evaporation Beds

Soil Percolation Rate (1 inch)	Application Rate (GPD)
1 minute	57,700
2 minutes	46,800
5 minutes	34,800
10 minutes	25,000
30 minutes	12,000
60 minutes	8,700

SEEPAGE PITS

1-170. The required size of a seepage pit can be determined from a percolation test and the estimated amount of effluent from the facility. The pit should be 4 to 6 feet deep and dug in a square or rectangular fashion. The bottom of the pit should be at least 2 feet above the groundwater table and 5 feet above rock or other impermeable soil conditions. The effective absorption

Table 1-9. Application Rate for Seepage Pits and Soakage Trenches

Soil Percolation Rate (1 inch)	Application Rate (GPD/sq ft)
1 minute	5.3
2 minutes	4.3
5 minutes	3.2
10 minutes	2.3
15 minutes	1.8
20 minutes	1.5
30 minutes	1.1
45 minutes	0.8
60 minutes	0.5

area is considered to be the total area of the walls in the pit; the bottom of the pit is not considered. Several smaller pits for a facility may be more feasible than one large pit. When more than one pit is used, ensure that there is equal distribution of the wastewater to all the pits. The distance between seepage pits should be at least twice the size of the pits. The pits should be located outside the base camp and at least 100 feet from the nearest water source.

1-171. Pits should be no deeper than 6 feet because deeper excavations might require wall shoring, which increases the construction effort. The design procedure is based on all absorption occurring in the walls only, and the required absorption area is obtained by increasing the length of the walls. Use the following steps to determine the required absorption area and pit size:

Step 1. Perform a percolation test *(paragraph 1-169)*. The test should be performed twice–initially and again at the full estimated depth.

Step 2. Determine the application rate from *Table 1-9*.

Step 3. Find the required absorption area by dividing the total estimated effluent from the facility by the application rate.

Step 4. Divide the required absorption area (step 3) by 4 (the number of walls).

Step 5. Divide the required absorption area per wall (step 4) by the depth of the pit (normally 6 feet). This will be the length of each wall. Remember, the bottom of the pit must be 2 feet above the groundwater table and 5 feet above any type of impermeable soil conditions.

Step 6. Construct a pit by using walls of this length determined from step 5.

NOTE: Using several small pits rather than one large pit reduces the excavation effort required.

Step 7. Fill the pit with large stones or rubble. Wastewater should be piped in near the center of the pit. Tar paper, plastic, or some other material can be used as a cover to prevent rainwater from filling the pit.

SOAKAGE TRENCHES

1-172. If a groundwater table or a rock stratum exists within 6 feet of the surface, a soakage trench may be substituted for a seepage pit. A soakage trench consists of a central pit that is 2 feet square and 1 foot deep. A trench radiates outward for 6 feet or more from each side of the pit. The trenches are 1 foot wide and increase in depth from 1 foot at the central pit to 1 1/2 feet at the outer end. The central pit and the radiating trenches are filled with gravel or broken rock. The length of the trench may vary as needed.

1-173. The design procedures for the soakage trench are similar to those for a seepage pit and are outlined below:

Step 1. Perform a percolation test *(paragraph 1-169, page 1-50).*

Step 2. Determine the application rate from *Table 1-9, page 1-51*.

Step 3. Determine the required absorption area by dividing the total estimated flow from the facility by the application rate.

Step 4. Divide the absorption area (step 3) by 8 (four radiating trenches; each trench has two walls). The absorption is considered to take place in the side walls of the trenches only, and this step yields the area of each wall.

Step 5. Divide the wall area from step 4 by the average depth of 1 1/4 feet, since each trench is 1 foot deep at one end and 1 1/2 foot deep at the other end. This step determines the length of each trench.

Step 6. Construct the soakage trench with four trenches of the determined length (step 5), each radiating from the central pit.

EVAPORATION BEDS

1-174. In places where a high groundwater table or clay soil prevents the use of standard seepage pits, evaporation beds may be used. Construct enough beds to handle the entire wastewater flow from the base camp laundry, kitchen, and bath facilities. Locate the beds outside the base camp and in an open, sunny area. Give careful attention to the proper rotation, maintenance, and dosage of the evaporation beds. If used properly, the beds create no insect problems and only a slight odor. An evaporation field is probably the simplest method of disposing of large amounts of wastewater from shower and laundry facilities. The design procedure is as follows:

Step 1. Perform a percolation test *(paragraph 1-169)*. The test should be performed in at least 3 or 4 locations over the area of the proposed field.

Step 2. Determine the application rate from *Table 1-8, page 1-50*. The rates in the table include allowances for resting, recovery, maintenance, and rainfall.

Step 3. Divide the total daily effluent by the application rate to determine the required acreage.

Step 4. Construct enough beds to equal the acreage calculated in *Step 3*.

ALTERNATE SYSTEMS

1-175. Although rare in theater construction, a waterborne sewage system for human waste may be desirable. If the sewer cannot be connected to an existing main sewer, a treatment facility must be constructed to support the base camp. The three types of treatment facilities that should be considered for theater base camps with waterborne human waste are–cesspools, sewage lagoons, and septic tanks with tile drain fields. While all three provide feasible solutions for the base camp, a septic tank with a tile drain field is preferred over the other two methods.

CESSPOOLS

1-176. Cesspools are no longer used in developed countries because they may pollute the groundwater; however, they are common in undeveloped countries. If water sources are in the area where cesspools are used, the water must continually be checked to verify its purity. Cesspools are the least preferred method and should be used only as a last resort.

SEWAGE LAGOONS

1-177. Sewage lagoons or oxidation ponds are common throughout the world. They can be used in all regions except arctic areas. Sewage lagoons are commonly used by small communities because they are less expensive to construct than sewage treatment plants. Although a sewage lagoon is easy to construct, it is not a recommended theater practice. Sewage lagoons must be located at least one-half mile from the population center because of the odors produced by anaerobic digestion. The increased length of the sewer collection system, compounded by the possible need for automatic lift stations, significantly increases the material cost and construction effort required for a complete system. Absorption from sewage lagoons into the surrounding soil is a problem and should be minimized. See *Table 1-10* for relative absorption rates in sewage lagoons.

Table 1-10. Relative Absorption Rates in Sewage Lagoons

Time Required for Water Level to Drop 1 Inch in a Test Hole	Relative Absorption Rate	Type of Soil
0-3 minutes	Rapid	Coarse sand and gravel
3-5 minutes	Medium	Fine sand or sandy loam
5-30 minutes	Slow	Clay, loam, or clay with sand
30-60 minutes	Semi-impervious	Dense clay
>60 minutes	Impervious	Hardpan or rock
NOTE: The first two types of soil are not suited for lagoons unless water retention is assisted by the installation of a waterproofing skin at the lagoon bottom.		

SEPTIC TANKS WITH TILE DRAIN FIELDS

1-178. Septic tanks are the preferred method of providing for primary and partial secondary treatment of sewerage containing human waste. Septic tanks are very common throughout the world. The preferred method of installation is to order a precast or fiberglass unit sized for the anticipated flow of wastewater; if available, septic tanks can be constructed in place. A septic tank separates and retains most of the solids in the sewage flow. The solids settle to the bottom of the tank and undergo anaerobic digestion. The effluent is dispersed into the surrounding soil by a tile drain field which is an underground system of porous pipes connected to the septic tank.

1-179. Subsurface irrigation is a method of sewage disposal commonly used in conjunction with septic tanks at small installations. This method allows sewage to seep directly into the soil or uses tile drain fields with application rates as shown in *Table 1-11*.

Table 1-11. Subsurface Application Rates of Sewage in Tile Drain Fields

Time Required for the Water Level to Drop 1 Inch in a Test Hole	Allowable Rate of Sewage Application (Gallons Per Square Foot of Trench Bottom Per Day)
1 minute	4.0
2 minutes	3.2
5 minutes	2.4
10 minutes	1.7
30 minutes	0.8
60 minutes	0.6

Tile Drain Fields

1-180. A tile drain field consists of lines of concrete or clay drain tiles laid in the ground with open joints. Recently, manufacturers have begun to produce concrete pipe with 1/4- to 3/8-inch perforations in the bottom half. Also, a bituminized fiber pipe with holes bored in the lower portion of the pipe to allow drainage can be used for these drain lines. This pipe is light, can be easily laid in the trench, and is made in various sizes (2 to 8 inches in diameter and 5 to 8 feet in length). The long lengths of pipe are particularly valuable in soil where other types of drain fields may settle unevenly. Perforated plastic pipe offers the same advantages. *Figure 1-29* and *Figure 1-30, page 1-56*, show typical field layouts. The following conditions are important for proper functioning of the tile fields:

- The groundwater is well below the level of the tile field.

- The soil has satisfactory leaching characteristics within a few feet of the surface, extending several feet below the tile. Soil leaching tests should be made at the site.
- The subsurface drains away from the field.
- The area is adequate.
- There is no possibility of polluting drinking-water supplies, particularly from shallow or driven wells in the vicinity.

1-181. The length of the tile and the details of the filter trench generally depend on the soil characteristics. The minimum width of trenches on the basis of soil are as follows:

- Sand and sandy loam, 1 foot.
- Loam, 2 feet.
- Sand and clay mixture, 2 feet.
- Clay with some gravel, 3 feet.

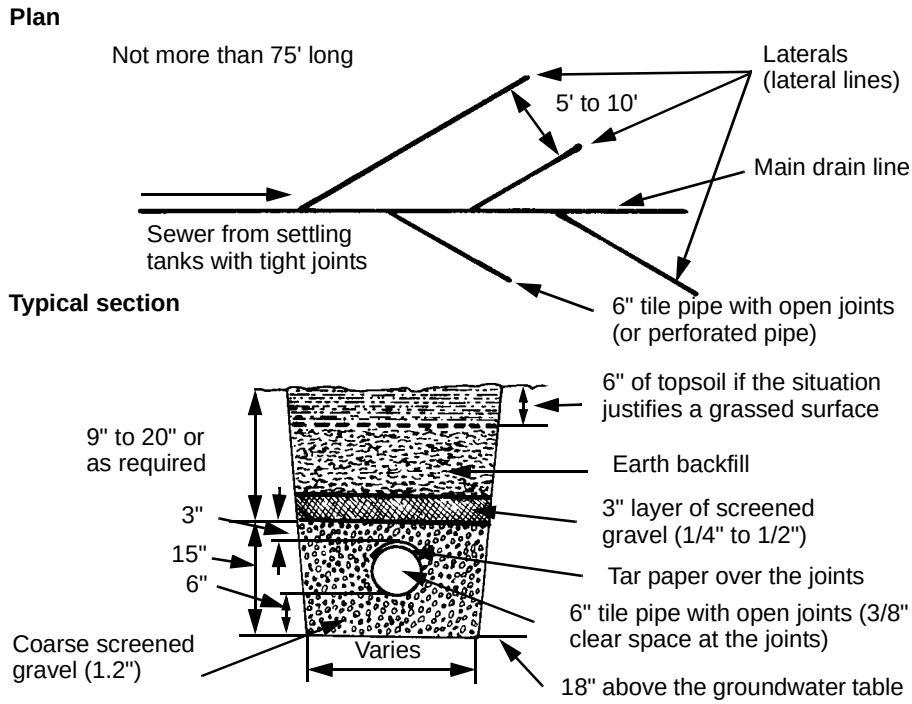

NOTE: No vehicle traffic is allowed over the tile drain field.

Figure 1-29. Typical Layout of a Subsurface Tile System

1-182. Placing tile below the frost line to prevent freezing is not necessary. Tile placed 18 inches below the ground surface operated successfully in New England for many years. Subsurface tile should never be laid below groundwater level.

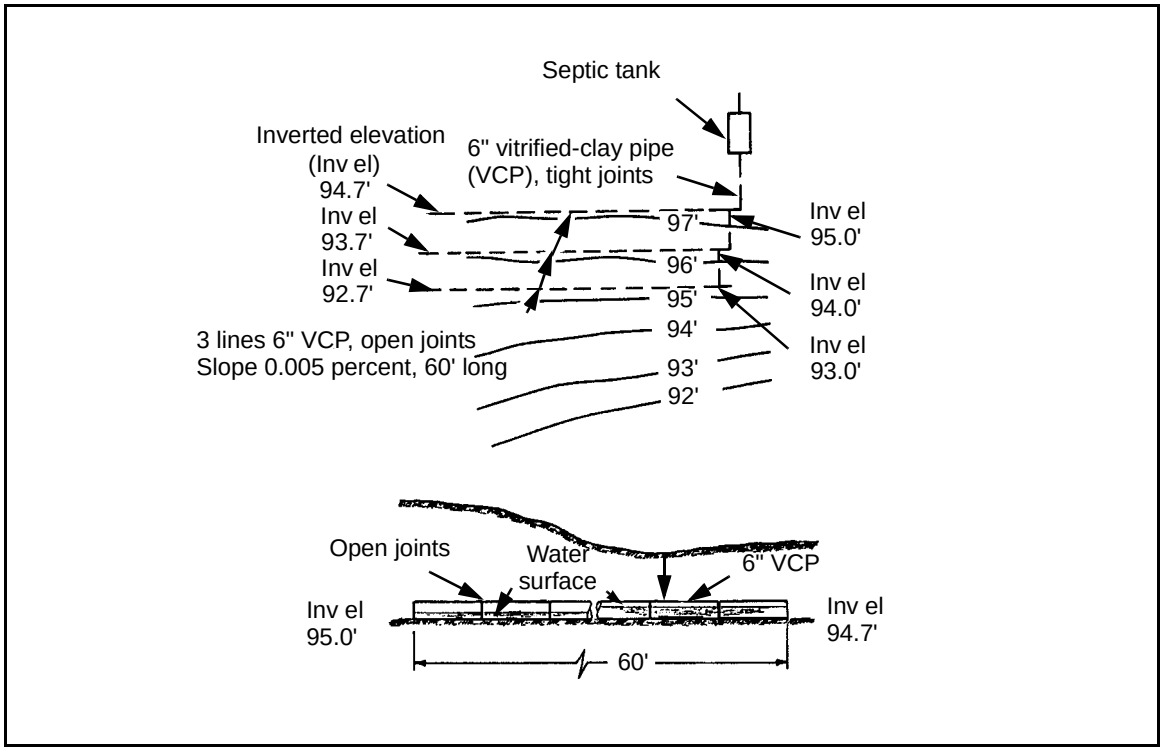

Figure 1-30. Typical Layout of a Tile Field in Sloping Ground

1-183. Design and construction should provide for handling and storing of some solid material to eliminate clogging of pipe joints. Pipe that is 3 to 6 inches in diameter is recommended. Larger pipe gives greater storage capacity for solids and a larger area at the joint for solids to escape into the surrounding gravel.

1-184. Lay pipe with 3/8-inch clear openings to provide for free discharge of solids from the line to the filter trench. Cover the top of the space with tar paper or similar material to prevent the entry of gravel. Bell and spigot pipe is easily laid to true line and grade. Good practice calls for breaking away two-thirds of the pipe along the bottom of the bells at the joint and using small wood-block spacers. The pipe is commonly laid at a slope of about 0.5 feet per 100 feet when taking the discharge directly from the septic tank, and 0.3 feet per 100 feet when a dosing tank is used ahead of the field.

1-185. Lay tile on a 6-inch bed of screened coarse gravel, with 3 inches of coarse gravel around and over the pipe. Gravel passing a 2 1/2-inch mesh and retained on a 3/4-inch mesh is recommended. This gravel bed gives a relatively large percentage of voids into which the solids may pass and collect before the effective leaching area becomes seriously clogged. Ensure that the soil which fills the trench does not fill the voids in the gravel around the pipe. A 3-inch layer of medium screened gravel over the coarse gravel and 3 inches of fine screened gravel over the medium stone is recommended.

1-186. Carefully design the tile layout. Generally, the length of the laterals should not exceed 75 feet. When tile is laid in sloping ground, distribute the

flow so that each lateral gets a fair portion, and prevent the flow from discharging down the slope to the lowest point. Lay individual lines parallel to the land contours *(Figure 1-30)*. Tile fields are commonly laid out in a herringbone pattern or with the laterals at right angles to the main distributor. Ensure that the distance between laterals is triple the width of the trench. You may want to connect the laterals to distribution boxes. Trenches 24 inches wide or more are the most economical. If a trenching machine is available, base the design on the width of the trench excavated by the machine.

1-187. Fence or post the tile field after it is constructed to prevent vehicle traffic from crushing the tile. Planting shrubs or trees over the field is not a good idea since the roots tend to clog the tile lines, but grass over the lines helps remove the moisture and keep the soil open. A typical section of a tile filter trench is shown in *Figure 1-29, page 1-55*.

Subsurface Drain Fields

1-188. Subsurface filter trenches or beds may be required where the soil is so dense and impervious that a tile drain field is impractical, and where lack of an isolated area prevents the use of an open filter. Drains that are under the subsurface filter trenches or beds may be discharged freely to the nearest satisfactory point of disposal, such as a small stream or a dry streambed.

1-189. Design filter trenches or beds for a rate of filtration not greater than 1 gallon per square foot per day. For filtering material use clean, coarse sand that passes a 1/4-inch mesh with an uniformity coefficent not greater than 4.0. Ensure that the filtering sand is at least 30 inches deep and coarse, screened gravel passes a 3 1/2-inch mesh and be retained on a 19/4-inch mesh. A typical section of an under-drained filter trench is shown in *Figure 1-31, page 1-58*. Governing conditions for field layout are similar to those for tile fields described above.

1-190. A typical plan and section for a subsurface filter bed are shown in *Figure 1-32, page 1-59*. Ensure that the slope of the distributors is about 0.3 feet per 100 feet when a dosing tank is used, and 0.5 feet per 100 feet when no dosing tank is required. For installations having more than 800 feet of distributors, build the filter in two or more sections with siphons to alternate the flow between the sections. Lay distribution pipelines in beds on 6- to 10-foot centers; under-drainpipes on 5- to 10-foot centers.

1-191. Provide dosing tanks with automatic sewage siphons for tile or subsurface fields when the length of distribution tile exceeds 300 feet. Design dosing tanks to discharge a volume equal to 70 to 80 percent of the volumetric capacity of the distribution piping in the tile field or filter. The dosing tank can usually be constructed as part of the septic tank and in the same width as the septic tank *(Figure 1-33, page 1-60)*.

PIPE SIZES

1-192. For most theater construction, a 6- to 12-inch plastic pipe is sufficient to transport wastewater from the facility to a disposal system. Place the pipe at about a 2 percent slope to facilitate gravity feed. Use *Table 1-12, page 1-58*, to determine the size of pipe needed.

Table 1-12. Pipe Sizes

Flow Rate (GPM)	Pipe Size (in inches)
< 300	6
300-700	8
700-1,250	10
1,250-2,200	12

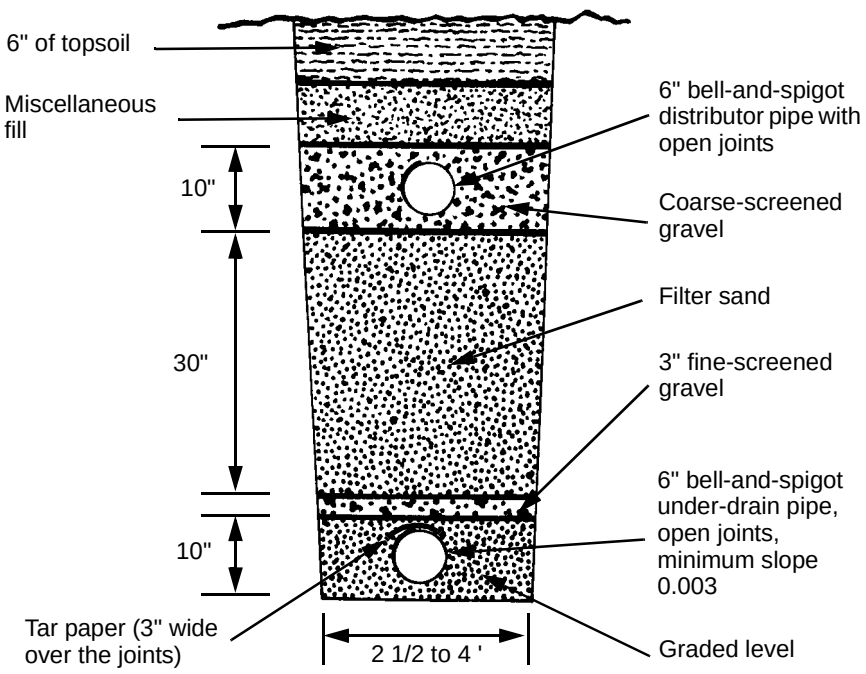

Figure 1-31. Typical Section of an Under-Drained Filter Trench

PIPE COVER

1-193. The minimum cover for wastewater pipe is as follows. In areas where freezing temperatures occur, the pipes must be placed below the frost line (except for subsurface tile systems).

- Pedestrian areas: 6 inches
- Light vehicles: 24 inches
- Heavy vehicles (2 1/2-tons >): 48 inches

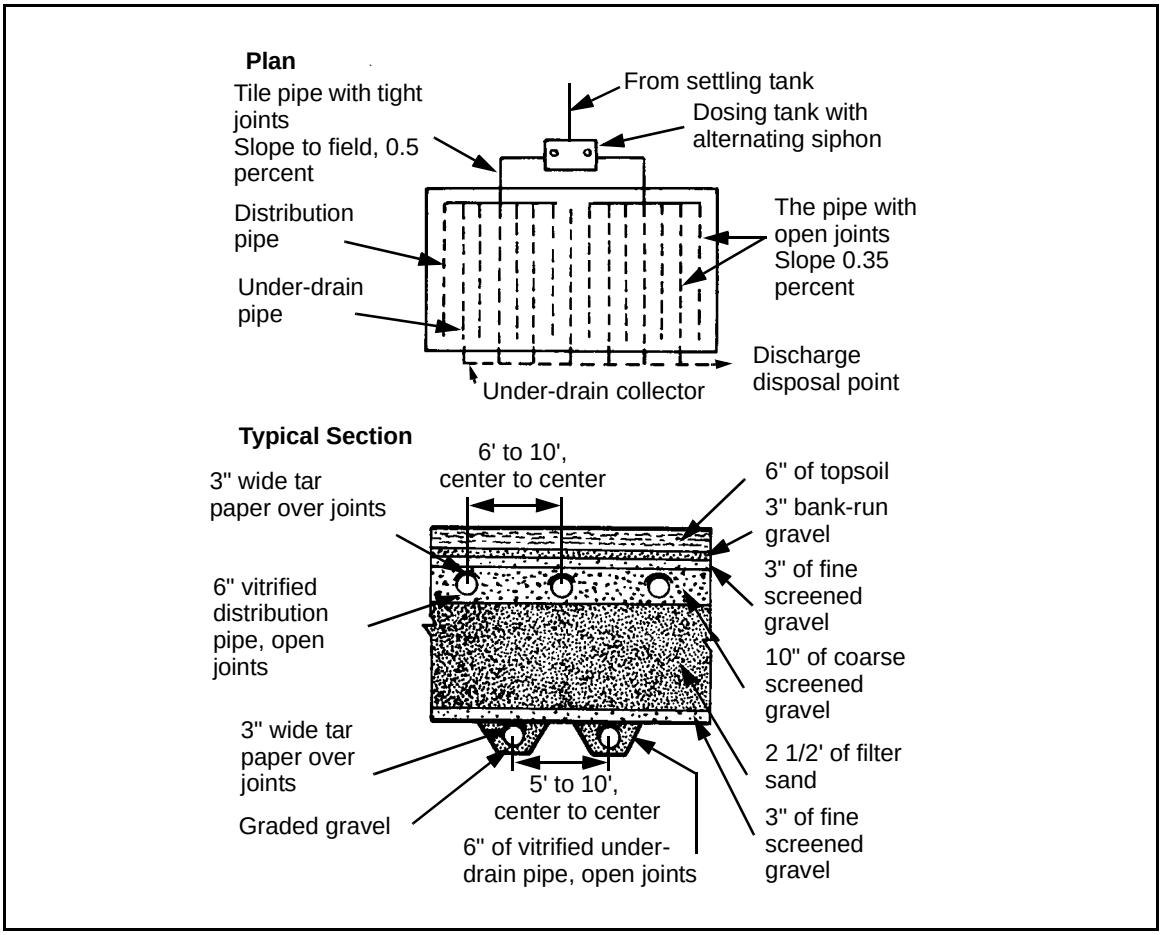

Figure 1-32. Typical Plan and Section of a Subsurface Sand Filter

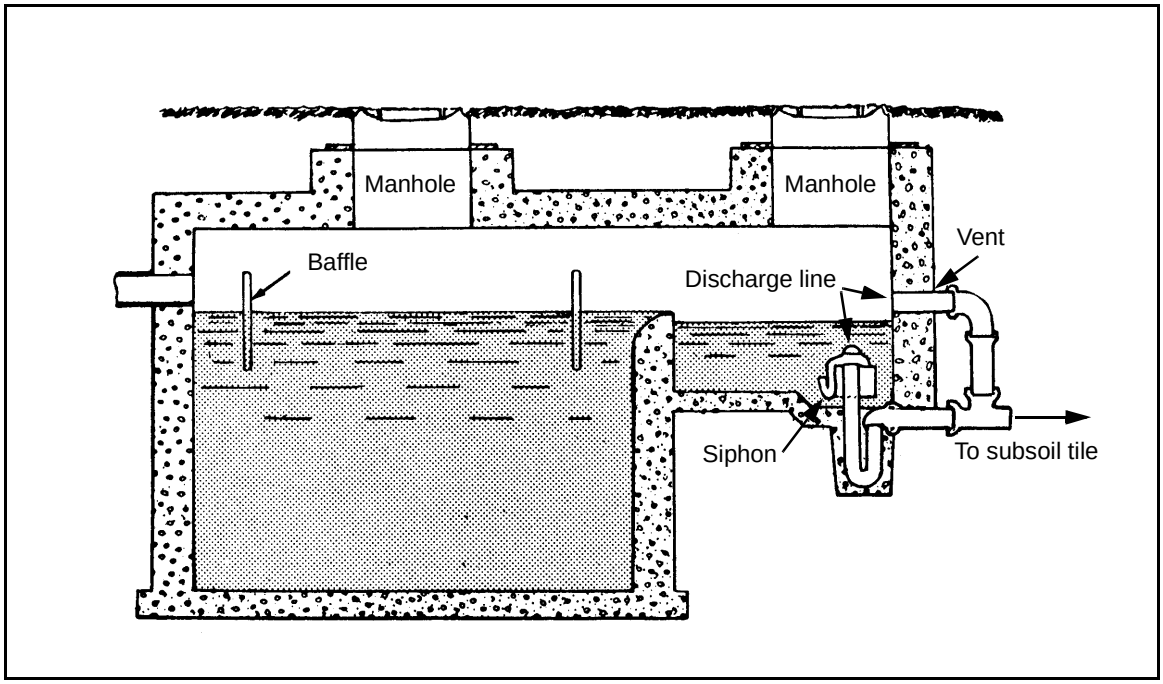

Figure 1-33. A Septic Tank With a Dozing Siphon

Chapter 2

Heating Systems

Heating systems carry heat from the point of production to the place of use. Heating-system designs are complex with many variations. They are classified by the medium used to carry the heat from the source to the point of use. Steam, hot-water, and forced-air systems are the most common. Hot-water heating is used extensively. Forced-air heating is used in most semipermanent constructions and in most barracks. *Appendix B* provides plumbing plans to include a list of heating symbols used on heating-system plans.

HOT-WATER HEATING SYSTEMS

2-1. A hot-water heating system is made up of a heating unit, pipes, and radiators or connectors. Water is heated at a central source, circulated through the system, and returned to the heating unit. Usually a pump (rather than a gravity system) is used to keep the water circulating. The two types of hot-water systems are the one-pipe and the two-pipe.

PLANS

2-2. A hot-water heating system may have a separate plan or may be combined with the hot- and cold-water and sewer lines on the plumbing plan. A hot-water-system plan shows the layout of units, pipes, accessories, and connections. *Figure 2-1, page 2-2*, shows a typical system. This figure also shows the location of the boiler, circulating pump, and compression tank. A one-pipe system is shown; however, the hot water will flow in two directions (or loops), each loop containing two radiators. The second radiator in each loop is larger than the first. (*Appendix B* provides heating symbols that are used on architect's plans.)

ONE-PIPE SYSTEM

2-3. A one-pipe system is the simplest type of hot-water system and is adequate for very small installations (*Figure 2-2, page 2-3*). Hot water circulates through one set of pipes through each radiator. As a result, the water reaching the last radiator is cooler than the water in the first radiator. To obtain the same amount of heat from all the radiators, each radiator must be larger than the one before.

TWO-PIPE SYSTEM

2-4. In a two-pipe system the hot water goes from the heating unit to each radiator by way of the main, connected by Ts and elbows (*Figure 2-3, page 2-3*). The cooler water leaving the radiators returns to the heater through separate return piping.

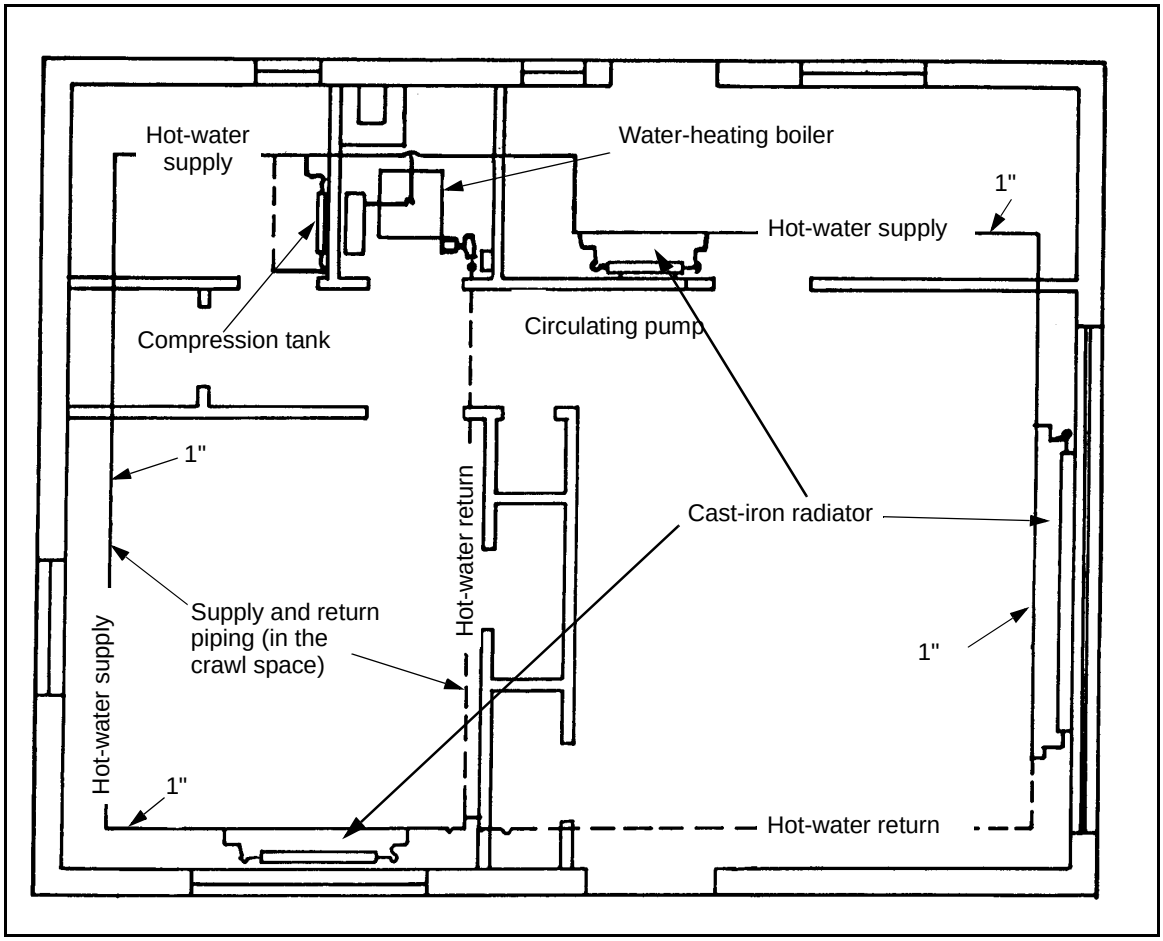

Figure 2-1. Hot-Water (One-Pipe) Heating-System Plan

STEAM-HEATING SYSTEMS

2-5. A steam-heating system consists of a boiler that heats the water, producing the steam; radiators in which the steam turns back to water (condenses), giving heat; and connecting pipes that carry the steam from the boiler to the radiators and returns the water to the boiler. This system includes either an air valve or other means of removing air from the system. The two types of steam-heating systems are the one-pipe and the two-pipe, which are classified as—

- *High-pressure.* A high-pressure system operates above 15-psi gauge.
- *Low-pressure.* A low-pressure system operates from 0- to 15-psi gauge.
- *Vapor.* A vapor system operates under both low-pressure and vacuum conditions.
- *Vacuum.* A vacuum system operates under low-pressure and vacuum conditions with a vacuum pump.

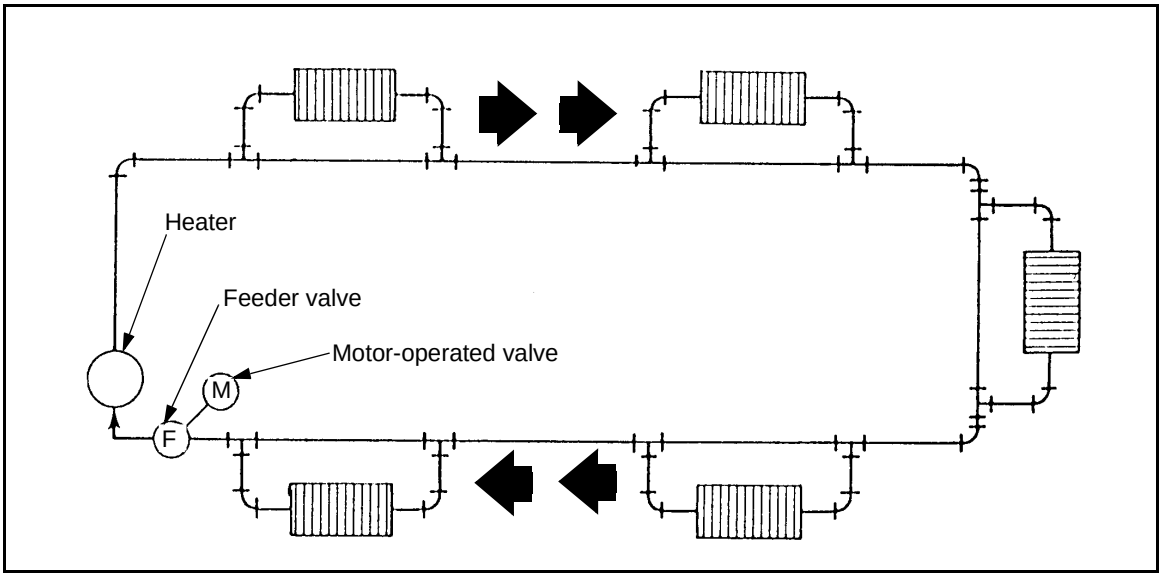

Figure 2-2. One-Pipe Hot-Water Heating System

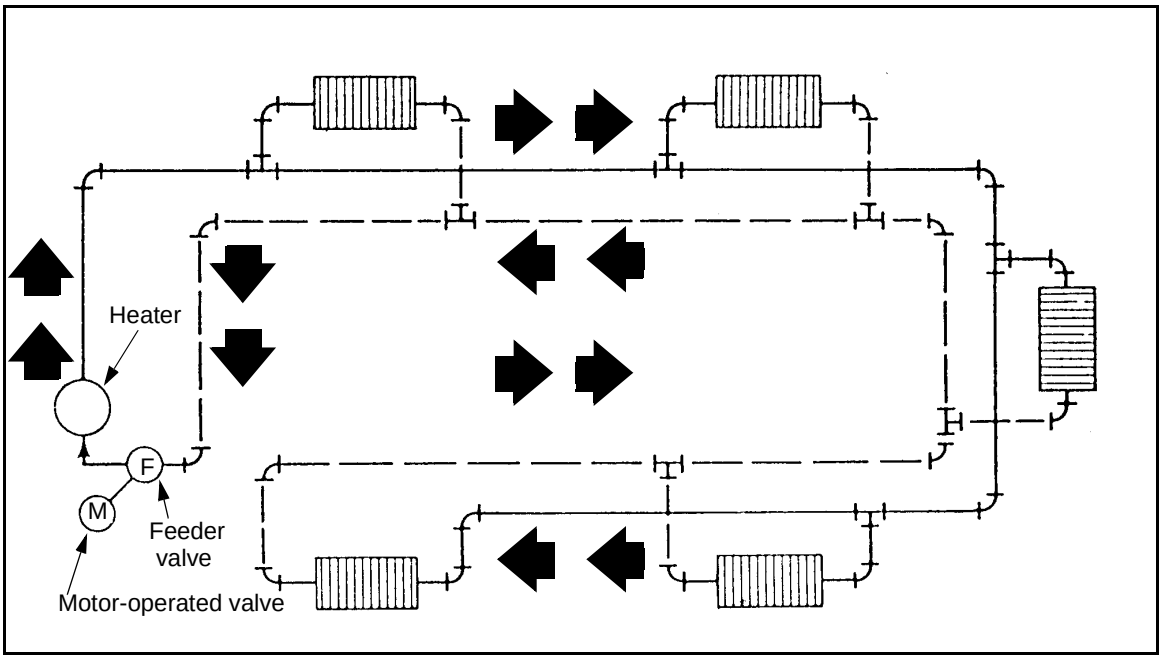

Figure 2-3. Two-Pipe Hot-Water Heating System

ONE-PIPE SYSTEM

2-6. The one-pipe system uses a single main and riser to carry steam to radiators or other heating units and to return condensed steam (condensate) to the unit. This system is best for small installations where low cost and easy operation are important. Each radiator or other heating unit is equipped with an air valve, controlled by heat (thermostatic), as shown in *Figure 2-4*. Larger air valves are installed at the end of steam mains. These valves should be the

vacuum-type with a small check valve to keep air from flowing back into the system when heat input is reduced. The connection to the unit may have shutoff (angle) valves. Since the restricted opening causes a repeated banging sound (water hammer), these valves cannot be partly closed for heat input control.

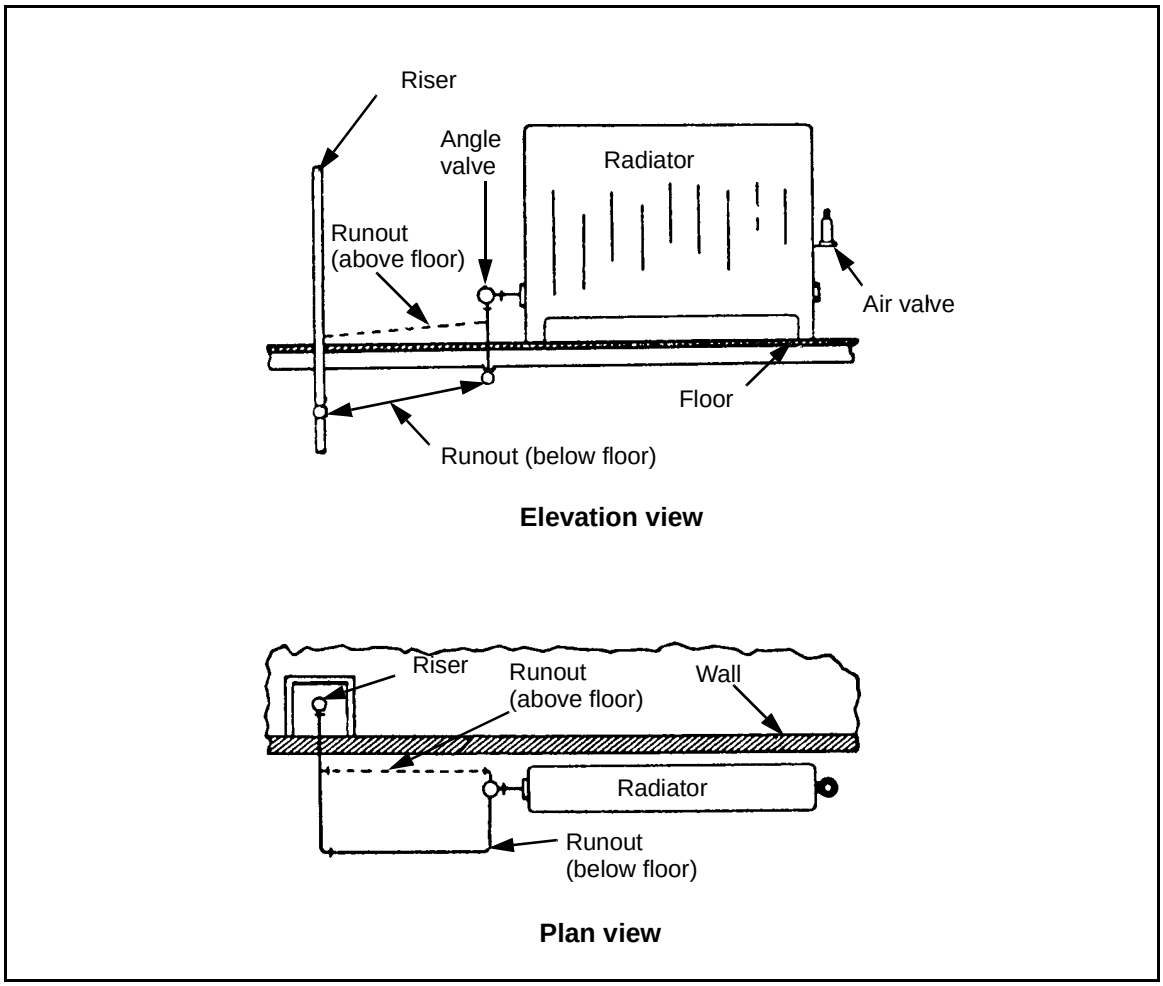

Figure 2-4. Radiator Connections for a One-Pipe Steam System

TWO-PIPE SYSTEM

2-7. The two-pipe system has two sets of mains and risers: one set distributes steam to the heating unit and the other returns condensate to the boiler. *Figure 2-5* shows a two-pipe steam system. This system operates under high- or low-pressure, vapor, or vacuum conditions, and with either upflow or downflow distribution. This system allows adjustment of steam flow to individual heating units. It uses smaller pipes than the one-pipe system. A two-pipe *upflow vapor* system, which can operate over a range of pressures, is shown in *Figure 2-6, page 2-6*.

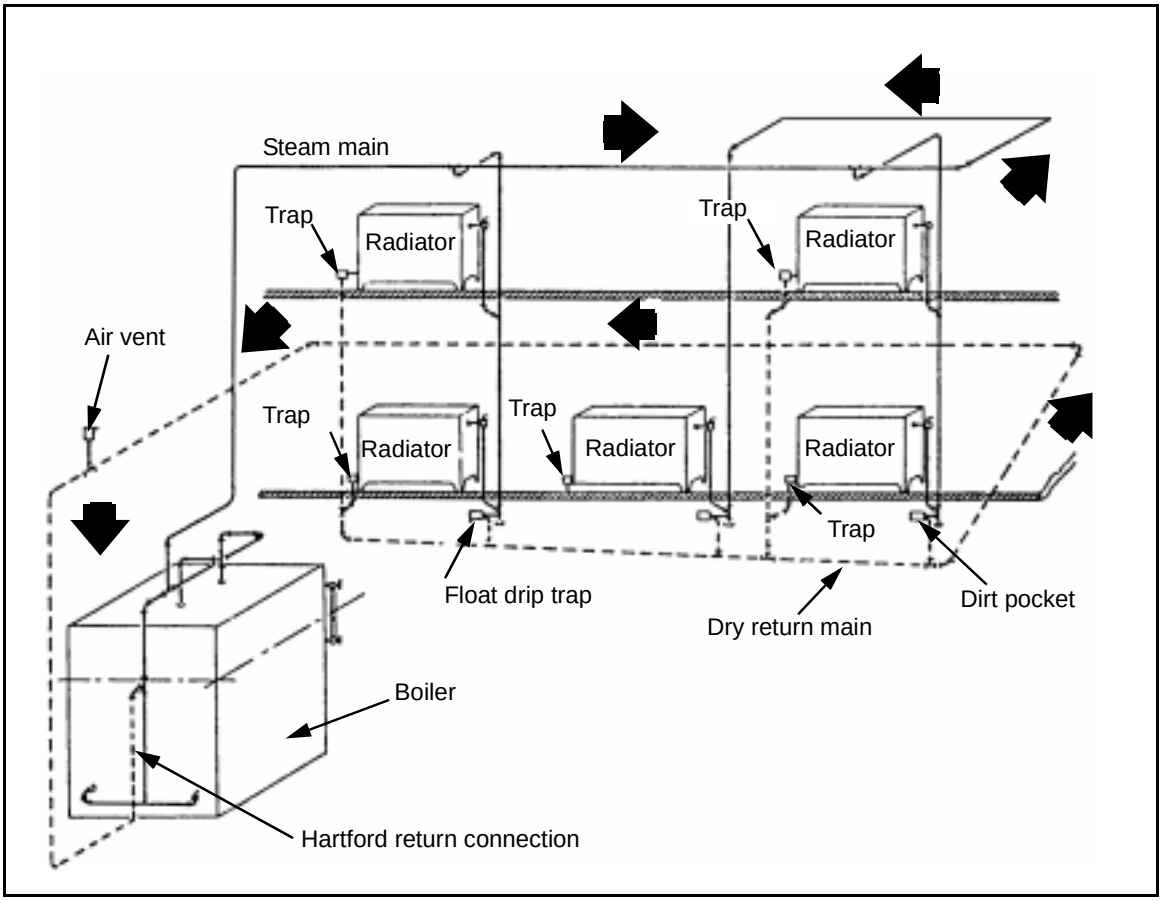

Figure 2-5. Two-Pipe Steam Heating System (Upflow or Downflow)

FORCED-AIR HEATING SYSTEMS

2-8. A forced-air *upflow* heating system distributes heated air through a duct system (*Figure 2-7, page 2-7*). The air is usually heated by a gas-fired or oil-fired furnace. This system consists of a furnace, a bonnet, warm-air supply ducts and registers, return cold-air registers and ducts, and a fan or blower forced-air circulation. *Figure 2-8, page 2-7,* shows a *downflow* furnace with a crawl space duct system and a crawl space plenum system.

PLANS

2-9. In a forced-air heating-system plan, solid lines indicate warm-air ducts; cold-air return ducts are indicated by dashed lines (*Figure 2-9, page 2-8*). (*Appendix B* gives the most common heating symbols used on plans.) All duct sizes give the horizontal or width dimensions first. (Depth, the second dimension, is not shown on a plan drawing.) Use the plan to determine the location and sizes of warm-air registers needed. When ceiling registers (diffusers) are used, the neck dimensions are given. When wall or baseboard registers are used, face dimensions are given. Look in the notes on a plan for the height of the wall registers above the finished floor line. Return (cold-air)

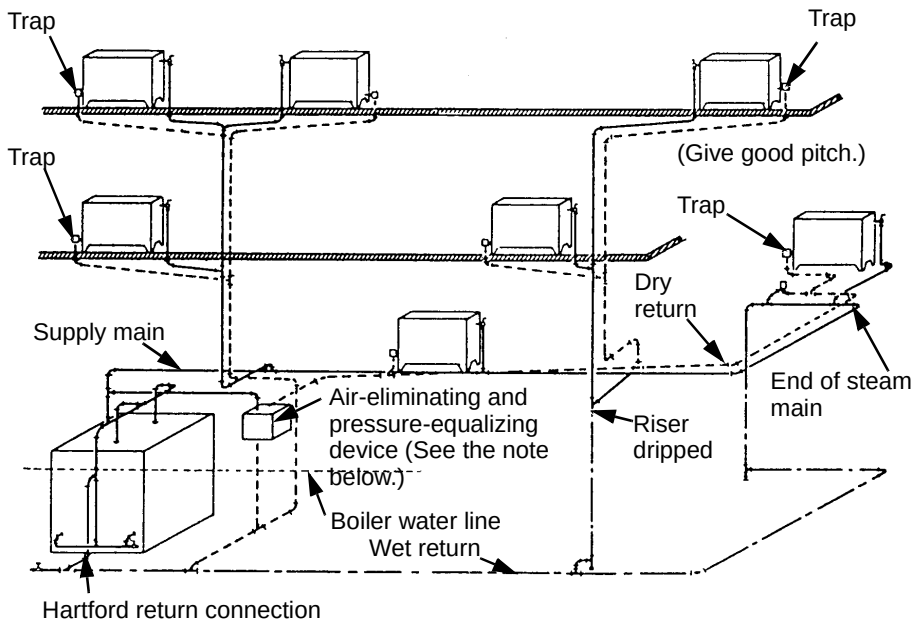

NOTE: Proper piping connections, with special appliances for pressure equalizing and air elimination, are essential. Condensate may be dripped from the end of stream main through the trap into the dry return.

Figure 2-6. Two-Pipe Upflow Vapor System

registers are shown recessed into the wall. The face dimensions of the return registers are noted adjacent to the register symbol.

INSTALLATION AND OPERATION

2-10. The bonnet above the heat plant (furnace) collects the heated air for distribution to various rooms. The warm air is distributed from the bonnet through rectangular-shaped supply ducts and registers (warm-air) into the rooms. The warm-air registers are installed in the ceiling. The air, after circulating through the rooms and losing heat, is returned to the furnace by the return (cold-air) registers and ducts. The return registers are placed in the wall, just below the opening; the return air ducts are installed in the crawl space. The warm-air distribution by branch ducts is the same as the examples shown in *Figure 2-9, page 2-8*.

2-11. Forced-air systems are laid out so that the warm air from the registers is directed at the cold exterior walls. In some systems, the warm-air registers are located in exterior walls below windows. The registers for cold-air return are normally installed at baseboard height. Cold air moves to the floor where it is collected by the cold-air registers and returned through ducts to the furnace for reheating and recirculation. Furnace location is important for

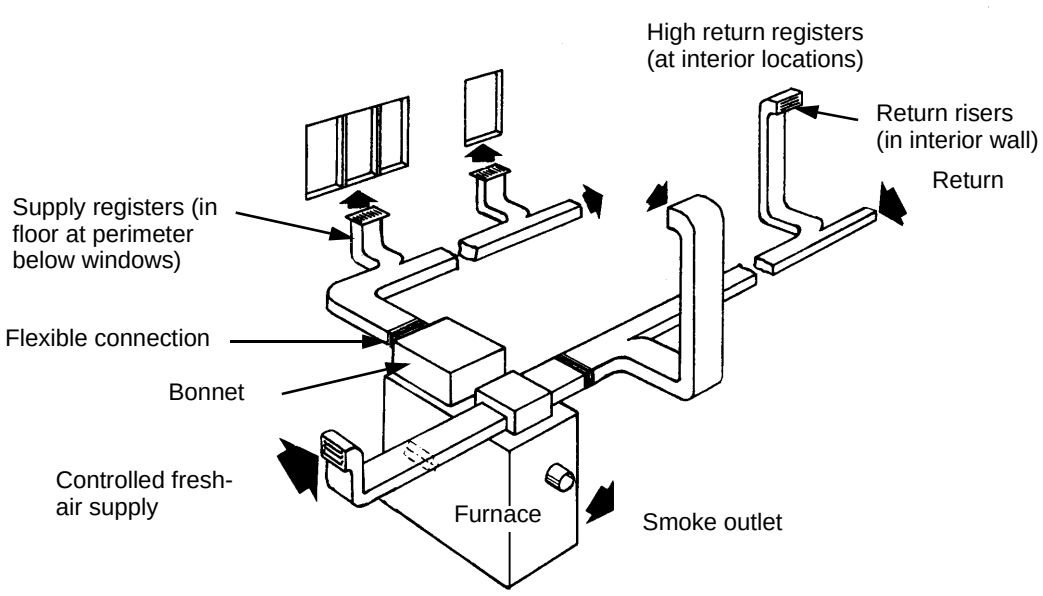

NOTE: The furnace and ducts are located in the basement of the basement-and-one-story house. In two-story houses, supply and return registers should be in the same relative positions in each story.

Figure 2-7. Forced-Air Upflow System

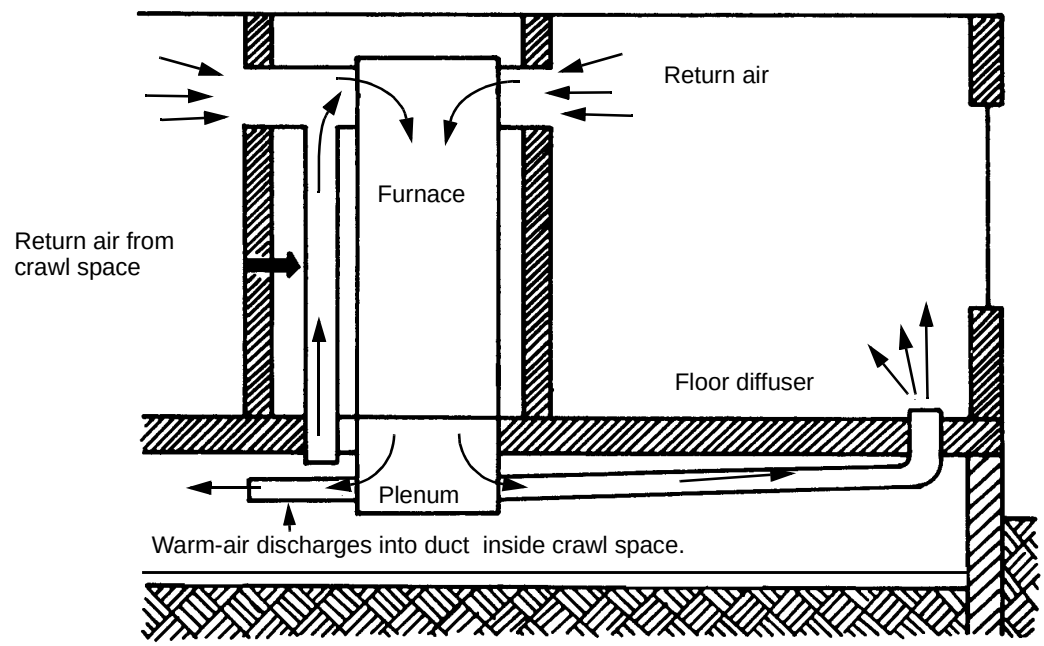

Figure 2-8. Forced-Air Downflow System

proper forced-air heating. This design equalizes duct lengths by centrally locating the furnace room (*Figure 2-9*) .

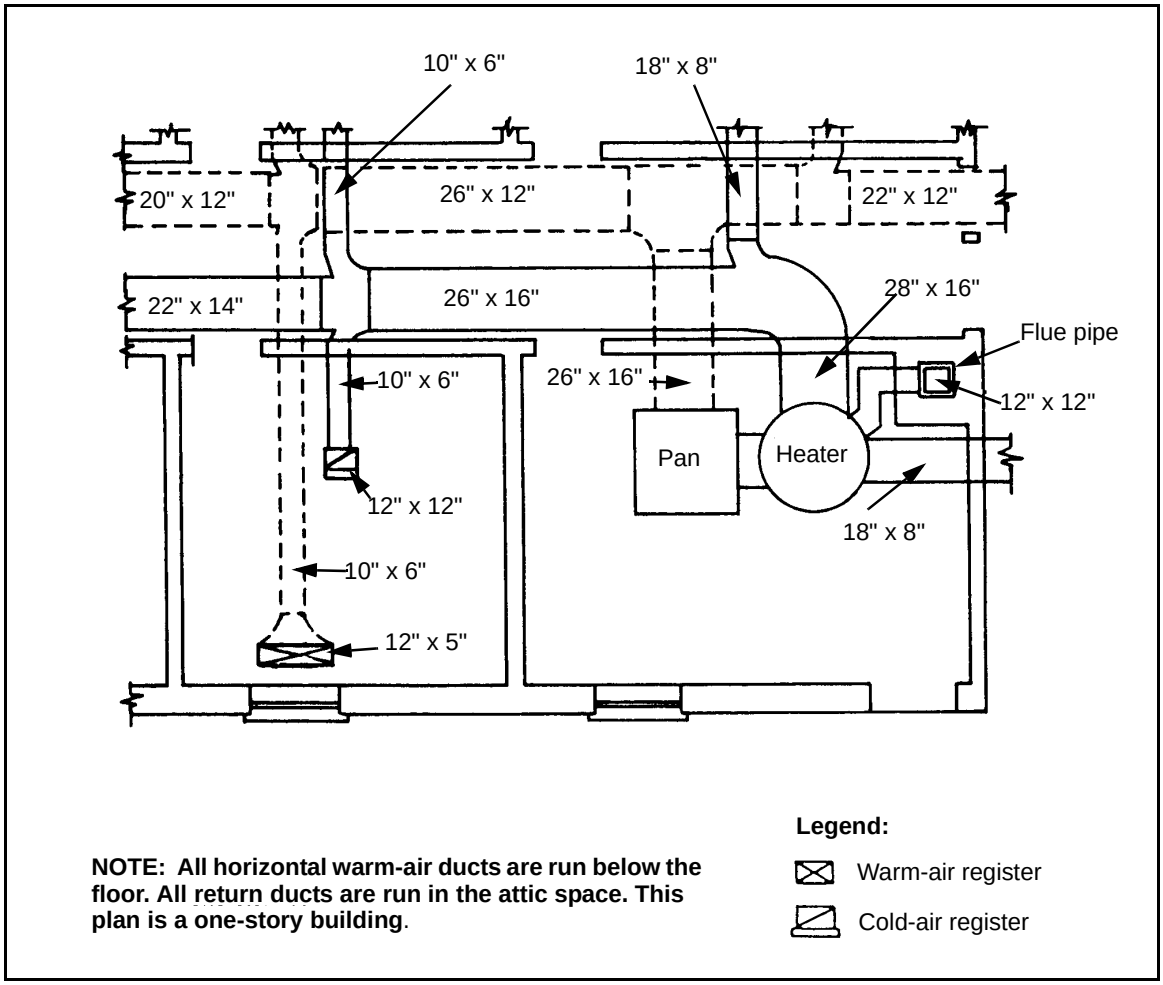

Figure 2-9. Partial View of a Forced-Air Heating-System Plan

Comfort Zone Design

2-12. The comfort zone is a horizontal area between the top of the average person's head and knees. Air blowing from the supply is uncomfortable. To avoid this, registers are placed either above or below the comfort zone-high on the wall or in the baseboard.

Duct Connections

2-13. The main trunk should run above a central corridor to equalize branch duct lengths to individual rooms. *Figure 2-10* shows common rectangular duct connections.

2-14. *Figure 2-10* also shows a typical warm-air bonnet with two main supply ducts. It shows two possible elbow connections and two duct Ts. The

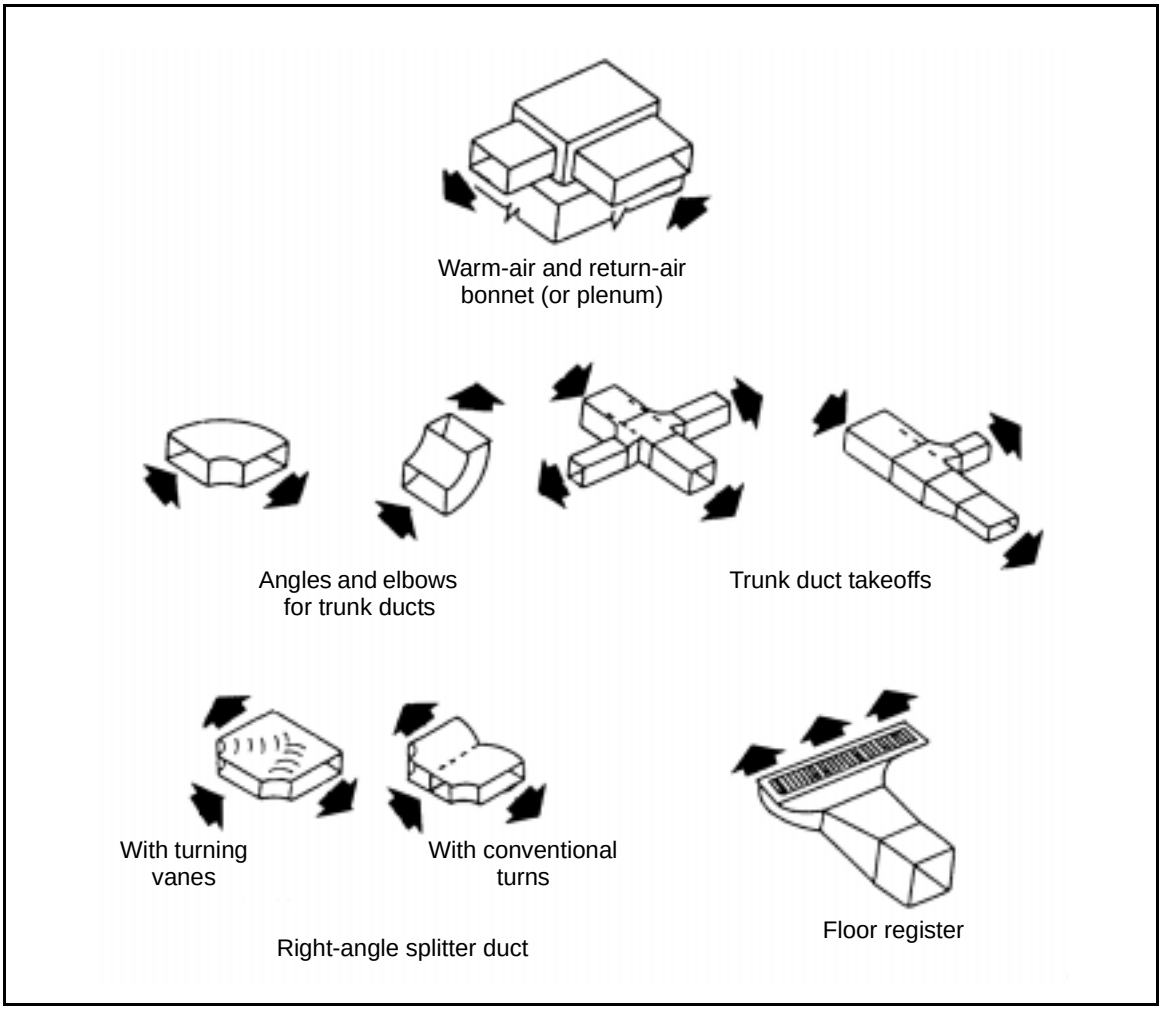

Figure 2-10. Rectangular Duct Connections

split T is used to direct the air flow on the warm side of the system. The straight T may be used on the cold-air return. Trunk takeoffs are shown. In the double-branch connection, less air is present in the main duct after some of it has been channeled into branch ducts. The size of the main duct can then be reduced on the far side of the connection point. The single-branch connection shows two methods of reduction. First, reduction in the duct is made at the connection. Secondly, a reduction in duct depth is made on the far side of the connection. In both double- and single-branch takeoffs, the branch connections form a natural air scoop to encourage airflow in the desired direction.

2-15. A boot is one method to change the shape of a duct without changing the equivalent cross section area or constricting the air flow. A boot fitting from branch to stack, with the stack terminating at a warm-air register, is shown in *Figure 2-11, page 2-10*. *Table 2-1, page 2-10* gives the equivalent lengths of gravity duct fittings.

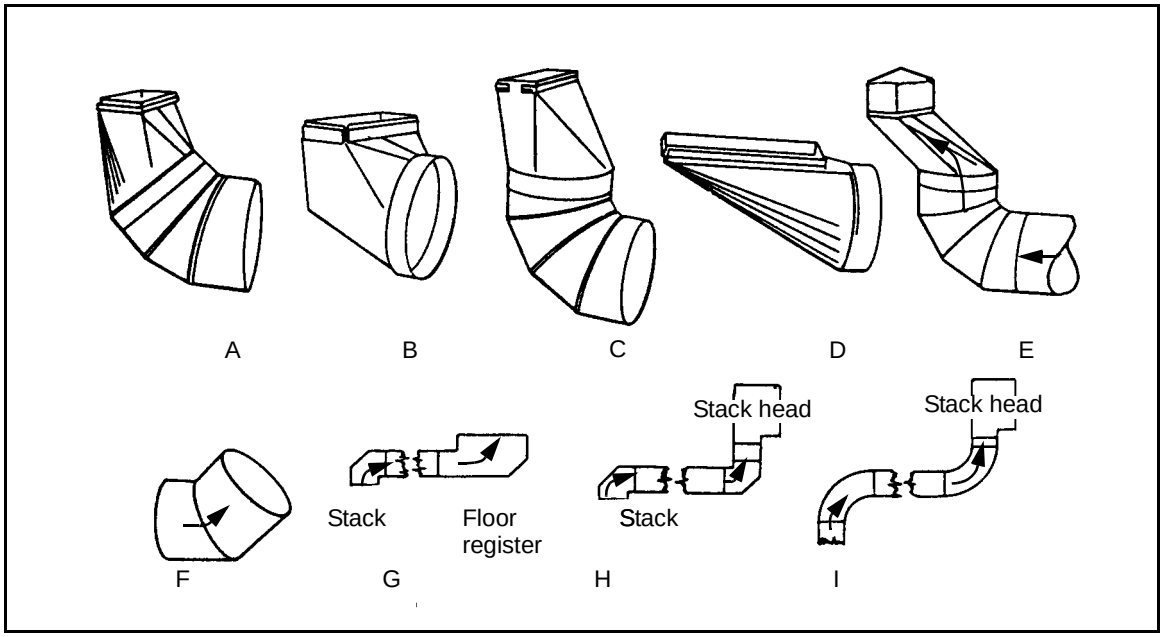

Figure 2-11. Duck (Boot) Fittings

Table 2-1. Equivalent Lengths of Gravity Duct Fittings

Warm-Air Boot	Name of Combination	Equivalent Number of 90-Degree Elbows
A	45-degree angle boot and 45-degree elbow	1
B	90-degree angle boot	1
C	Universal boot and 90-degree elbow	1
D	End boot	2
E	Offset boot	2 1/2
F	45-degree angle boot	1/2
G	Floor register, second story	3
H	Offset	3
I	Offset	2 1/2

Chapter 3

Basic Plumbing Repairs and Maintenance

This chapter covers step-by-step repair procedures for leaky pipes, frozen pipes, and fixture and drain-line stoppages. (Repairing leaky valves and faucets is covered in *Chapter 7*.) Preventive maintenance, covered in this chapter, can help reduce corrosion and scale, which can cause leaky pipes and a sharply reduced water flow, respectively.

LEAKS

PIPE CORROSION

3-1. Pipe corrosion is the thinning of the wall of a metal pipe, caused by electrolysis (chemical breakdown by electric current), rust, or acidity of the water. Galvanic corrosion (resulting from a direct current of electricity) occurs in a plumbing installation system that includes two different kinds of metal pipe, such as galvanized pipe and copper pipe.

3-2. The first sign of corrosion may be a leak in the system occurring within the walls or floors of the building. Water may show up several levels below the leak. To help locate the leak, use a strip of wood as a resonator to detect and magnify the sound of the leak. Place one end of the wood against your ear and the other end against the pipe and trace the sound. Sound will increase when getting closer to the leak.

Repairing Corrosion

3-3. After locating the leak, cut out and replace the corroded pipe with—

- *Galvanized pipe.* Use the following steps to replace galvanized pipe:

  Step 1. Shut off the water at the nearest valve below the leak, and drain the pipe.

  Step 2. Where the fittings on each side of the leak are not readily available, cut out the leaking section. One plumber should hold the pipe with a wrench to prevent its turning in the adjoining fitting, while another plumber cuts a thread on it.

  Step 3. Replace the cutout section with a coupling, a pipe section of the required length, and a union.

- *Copper pipe.* Copper pipe resists corrosion, except when attacked by acids. If a leak occurs in copper pipe—

  Step 1. Shut off the water at the nearest valve below the leak, and drain the pipe.

  Step 2. Replace it with either soldered or compression joints. (These methods are described in *Chapter 6*.)

NOTE: Make sure to allow for the fittings required to install the replacement pipe.

Reducing Corrosion

3-4. The two ways to reduce corrosion in plumbing systems are with—

- *Dielectric unions.* Dielectric unions placed in the cold- and hot-water takeoffs from the tank can control galvanic corrosion of water tanks. A dielectric union has a fiber washer, which insulates the tank from the rest of the plumbing installations, preventing the flow of current from the tank to the system.
- *Magnesium rods.* Magnesium rods are used in some water heaters, such as the gas-operated type, to protect against rust and corrosion. They act as electrolytic cells in which the magnesium particles go into solution, flow through the water, and are deposited on the metal to be protected. The electrolytic action (electrolysis) dissolves the rods. Eighteen months is considered the maximum life of the rods; then they must be replaced.

VALVE REPAIR

3-5. All valves should be checked regularly for leaks. Most leaks are from leaky washers or bonnets. Refer to *Chapter 7* for repairs.

FAUCET REPAIR

3-6. Refer to *Chapter 7, Section II*, for faucet repairs.

TEMPORARY REPAIRS FOR SMALL LEAKS

3-7. Small leaks in a system require temporary or emergency repairs. Before making any repairs, shut off the water and relieve the pressure from the system. Pipes can be temporarily repaired with—

- *Rubber hose or plastic tubing.* Cut the pipe on either side of the leak with a hacksaw or pipe cutter. Remove the damaged pipe section and replace it with a length of rubber hose or plastic tubing. To do this, slip the ends over the pipe and fasten them with hose clamps. The inside diameter of the hose must fit the outside diameter of the pipe.
- *Sheet rubber***.** Wrap the leaking area with sheet rubber. Place two sheet-metal clamps on the pipe (one on each side). Then, fasten the clamps with nuts and bolts.
- *Electrician's friction tape.* Wrap several layers of friction tape around the hole or crack, extending the tape about 2 inches above and below the leak.
- *Wood plugs.* Small holes can be filled with wood plugs. Drive a wooden plug into the hole after it is drilled or reamed. The plug will swell as it absorbs water, preventing it from being blown out by water pressure.

NOTE: A permanent repair should be made as soon as possible to replace the weak or defective part. Replace it with a unit (and insulation if used) that is the same size and quality as the original installation.

FROZEN PIPES

3-8. Water supply lines may freeze when exposed to temperatures below 32 degrees Fahrenheit. Outside pipes must be buried below the frost line. In northern zones, this may be 4 feet or more. If the building temperature falls below freezing, inside pipes may also freeze, causing the pipe to break at the weakest point. Procedures for thawing above- and below-ground pipes are discussed in the paragraphs below.

ABOVEGROUND PIPES

3-9. A blowtorch is the best method to thaw aboveground pipes, but there is a risk of fire. Use the following steps when using a blowtorch:

Step 1. Open the faucets in the line.

Step 2. Apply heat from the blowtorch at one end of the pipe and work along the entire length of the pipe.

Step 3. Continue to heat the pipe until the water flows freely.

CAUTION

Do not overheat. Solder joints will break loose when the solder melts.

3-10. Pipes can be thawed by wrapping them with burlap or other cloth and pouring boiling water over the wrappings, thus transmitting heat to the frozen pipe.

3-11. When internal freezing is due to failure in the heating plant, the heating plant must be repaired; a high temperature should be maintained in the building until the pipes thaw.

UNDERGROUND PIPES

3-12. Use the following steps to thaw frozen underground pipe:

Step 1. Remove the pipe fittings.

Step 2. Place a small thaw pipe or tube into the frozen pipe as shown in *Figure 3-1, page 3-4*.

Step 3. Add an elbow and a piece of vertical pipe to the outer end of the thaw pipe.

Step 4. Place a bucket under the opening to the frozen pipe.

Step 5. Insert a funnel into the open end of the vertical pipe.

Step 6. Pour boiling water into the funnel and, as the ice melts, push the thaw pipe forward.

Step 7. After the flow starts, withdraw the pipe quickly. Allow the flow to continue until the thaw pipe is completely withdrawn and cleared of ice.

NOTE: A small pump may be used to clear a piece of pipe. However, excessive pump pressure can cause a backup; therefore, this procedure must be carefully monitored.

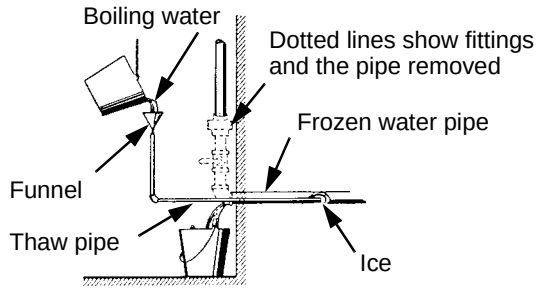

Figure 3-1. Thawing A Frozen Pipe

SCALE

3-13. Scale can sharply reduce the flow of water to fixtures. Scale is a result of hard water. Hard water contains a large amount of calcium and magnesium compounds which prevent soap from lathering. This forms a scum, which slows down the flow of water. The scum deposits harden and form scale.

REDUCING SCALE

3-14. In localities where the water is unusually hard, a water softener is used to reduce the hardness. The softener normally contains zeolite, which must be recharged regularly. Add sodium chloride (table salt) to the water to recharge. Water softeners are programmed to recharge at a set time each day. The softened water is then piped into the distribution system.

REMOVING SCUM

3-15. To remove scum that has formed on the inside of a pipe, do one of the following:

- Flush with hot water.
- Use lye or lye mixed with a small quantity of aluminum shavings. Only cold water should be used with lye.
- Replace the entire pipe when there is a sharp reduction of water flow.

NOTE: Chemical cleaners should not be used in pipes that are completely stopped up because the cleaners must contact the stoppage directly.

WASTE SYSTEM STOPPAGES

3-16. A common problem in waste systems is a stoppage. A stoppage can occur in a fixture drain, floor drain, branch line, or main line. The cause can be hair, grease, or other foreign matter that holds back the flow of waste disposal. Use the proper clearing tool to clear the stoppage. These tools

(Figure 3-2) are designed to clear stoppages in different areas of the waste system. These areas include water closets, lavatories and sinks, urinals, bathtubs, shower drains, branch and main waste lines, and grease traps

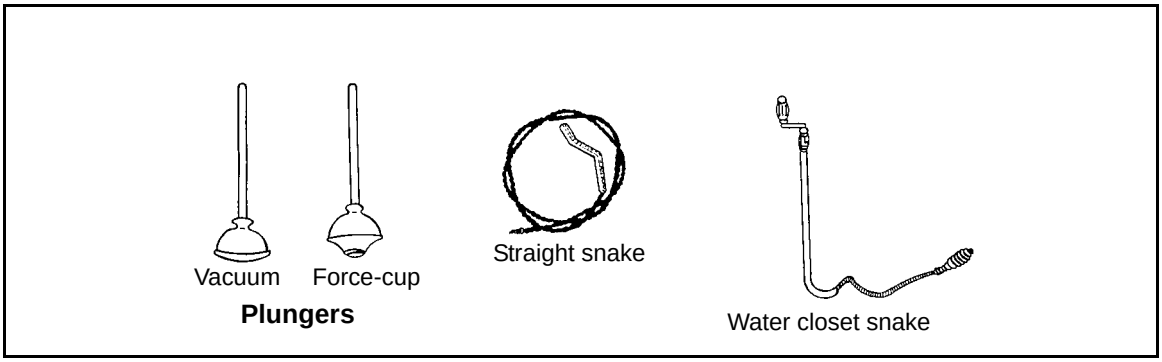

Figure 3-2. Stoppage Clearing Tools

3-17. Water closet stoppages *(Figure 3-3)* can be cleared with a—

- *Force-cup plunger*. Use the following steps to clear stoppages with a force-cup plunger:

  Step 1. Pump the plunger up and down until the water level drops.

  Step 2. Place toilet paper in the bowl and flush the water closet to check if the stoppage is cleared.

- *Water closet snake*. Use the following steps to clear stoppages with a water closet snake:

  Step 1. Push the snake into the bowl and turn the handle clockwise with a push-pull action until the water level drops.

  Step 2. Check to see if the stoppage is cleared as in step 2 above.

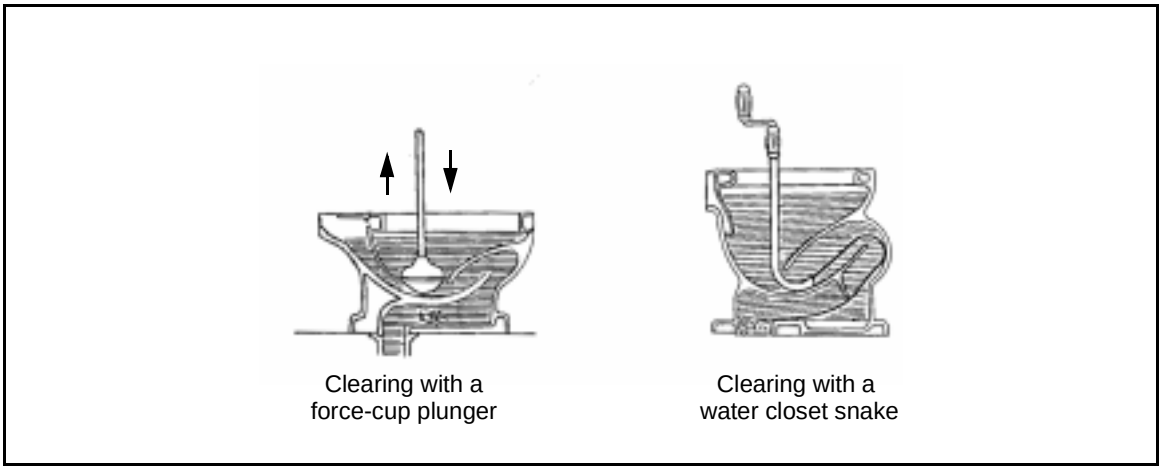

Figure 3-3. Clearing Water Closet Stoppages

LAVATORIES AND SINKS

3-18. Clear lavatory and sink P-trap stoppages *(Figure 3-4)* with a—

- *Plunger*. Use the procedures below to clear stoppages.

  Step 1. Place a wet rag in the bowl's overflow opening. If the lavatory has a pop-up plug, remove the plug.

  Step 2. Set a plunger over the waste outlet and push it up and down until the water completely drains out of the bowl.

  Step 3. Remove the rag from the overflow opening and replace the pop-up plug, if necessary.

  Step 4. Run water through the drain to ensure that the stoppage is removed.

- *Snake (1/4- to 1/2-inch)*. Use the steps below to clear stoppages.

  Step 1. Remove the plug if the lavatory has a pop-up plug.

  Step 2. Push the snake down into the waste outlet as far as it will go.

  Step 3. Use a push-pull and turning action until the water completely drains out of the bowl.

  Step 4. Remove the snake and replace the pop-up plug, if applicable.

NOTE: Stoppage in a P-trap can be removed by disassembling the P-trap, then removing the stoppage. Reassemble the P-trap after the stoppage is removed and flush with water to ensure good drainage of water.

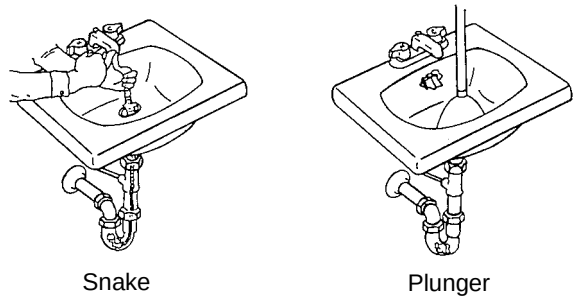

Figure 3-4. Clearing Lavatory and Sink Stoppages

3-19. Use the following steps to clear lavatory and sink drain line stoppages beyond the P-trap *(Figure 3-5)*:

Step 1. Place a container under the P-trap to catch the water spillage, then disassemble the P-trap.

Step 2. Push the snake into the drain line, turning it with a push-pull action until it moves freely.

Step 3. Remove the snake and replace the P-trap, then run water through the drain line to ensure that the water flows freely.

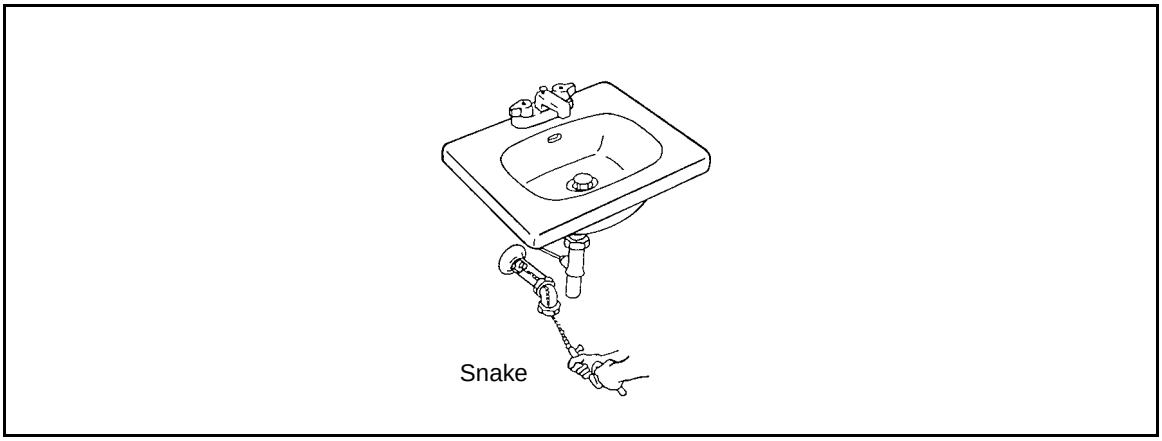

Figure 3-5. Cleaning Lavatory and Sink Stoppages Beyond the P-Trap

URINALS

3-20. A stoppage in a urinal with a water seal or an exposed P-trap is cleared the same as a lavatory (using a plunger and a 1/4- to 1/2-inch snake).

BATHTUBS

3-21. Use the steps below to clear bathtub P-trap stoppages *(Figure 3-6)*.

Step 1. Remove the stopper linkage and the overflow cover.

Step 2. Push a 1/4- to 1/2-inch drain snake into the overflow opening until it meets some resistance.

Step 3. Turn the snake using a push-pull motion until it turns freely.

Step 4. Remove the snake and run water through the drain to check if the stoppage is cleared.

Step 5. Replace the overflow cover and linkage.

NOTE: Stoppage can often be removed with a vacuum plunger. Try a plunger first; if the plunger does not work, use a snake.

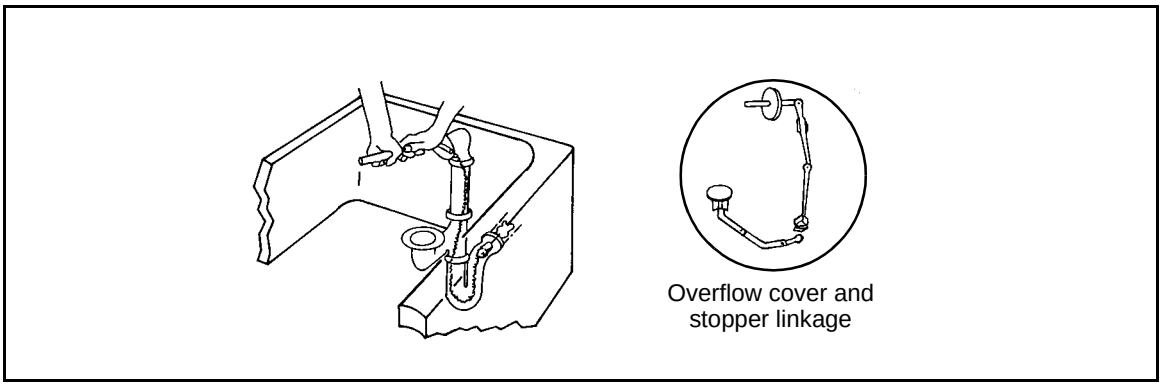

Figure 3-6. Clearing Bathtub P-Trap Stoppages

3-22. Use the following steps to clear drum-trap stoppages (*Figure 3-7).*

Step 1. Remove the drum-top cover and gasket and push a 1/4- to 1/2-inch snake into the trap's lower line to search for the stoppage.

Step 2. If a stoppage exists, clear it.

Step 3. If there is no stoppage in the lower line, remove the snake and push it into the upper line.

Step 4. Turn the snake with a push-pull action to remove the stoppage and replace the gasket and cover.

Step 5. Run water through the drain to see if the stoppage is cleared.

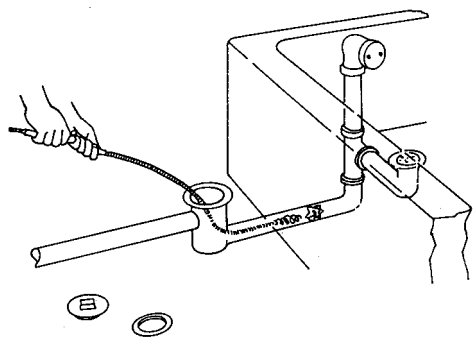

Figure 3-7. Clearing Bathtub Drum-Trap Stoppages

SHOWER DRAINS

3-23. Shower drains *(Figure 3-8)* can be cleared by using a—

- *Hose.* Use the steps below to clear drains.

  Step 1. Remove the strainer from the drain.

  Step 2. Hook up the water hose to a source of water and place the other end of the hose into the drain.

  Step 3. Stuff rags around the hose to form a tight seal.

  Step 4. Turn the water on full force, then off and on again. The surge of water (pressure) will clear the stoppage.

  Step 5. Replace the strainer.

- *Snake (1/4- to 1/2-inch).* Use the steps below to clear drains.

  Step 1. Remove the strainer from the drain.

  Step 2. Push the snake into the drain and turn the snake with a push-pull action until it moves freely.

  Step 3. Remove the snake and replace the strainer.

3-24. Floor Drain Stoppage. Floor drain stoppages are cleared the same as shower drains *(Figure 3-8).* A floor drain may have the strainer cemented to

the floor; if so, remove it by chipping the cement around the strainer. Once the stoppage is cleared, cement the strainer back in place.

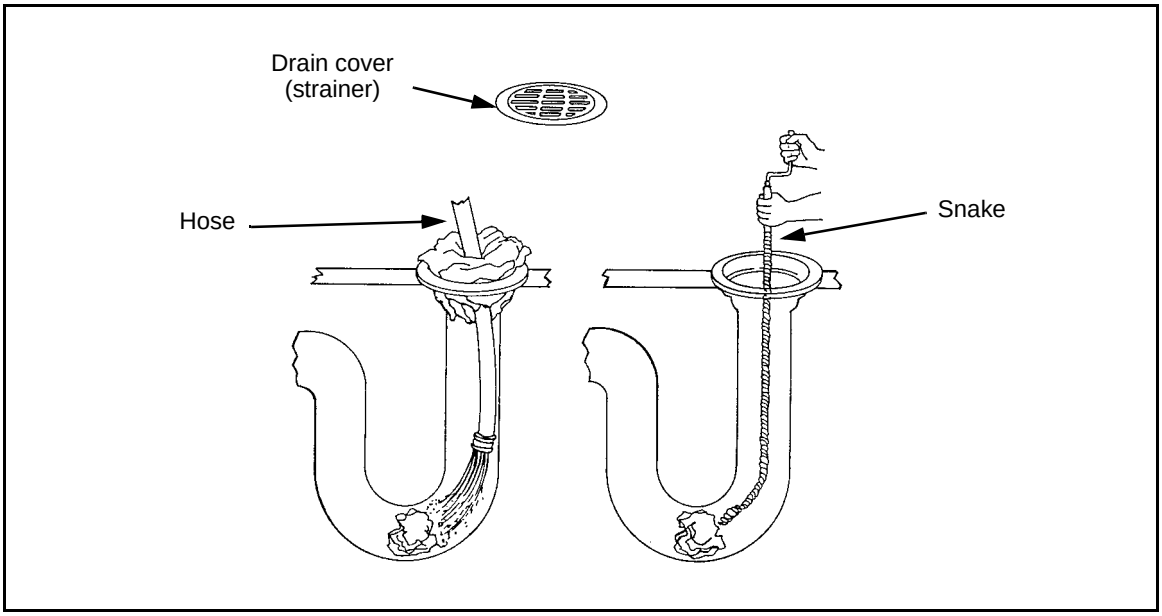

Figure 3-8. Clearing Shower-Drain Stoppages

BRANCH AND MAIN WASTE LINES

3-25. Stoppages *(Figure 3-9, page 3-10)* that occur in a branch or main waste line in a building are cleared through a cleanout plug. Clear branch lines by using the following steps:

Step 1. Remove the closest cleanout plug.
Step 2. Clear the stoppage with a snake.
Step 3. Replace the cleanout plug.
Step 4. Run water through the drain to ensure that the stoppage is cleared.

3-26. Clear main lines by using the following steps:

Step 1. Remove the closest cleanout plug.
Step 2. Clear the stoppage with a 3/4- to 1-inch heavy-duty snake.
Step 3. Replace the cleanout plug.

GREASE TRAPS

3-27. All work is done on the principle that grease is lighter than water and will rise to the top of the water. Use the following steps to clear a grease-trap stoppage:

Step 1. Remove the top cover and dip out the grease with a ladle.
Step 2. Scrape the walls and bottom after the grease is scooped out.
Step 3. Flush with clear water.

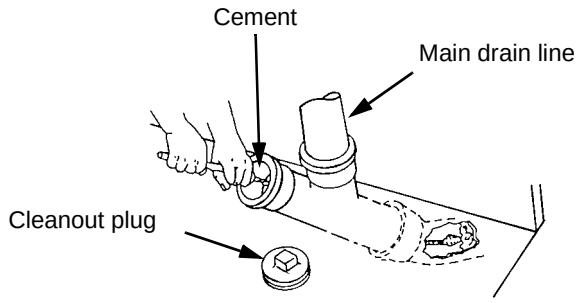

Figure 3-9. Clearing Waste-Line Stoppages

Chapter 4

Plumbing Fixtures

A plumbing fixture receives water and discharges its waste into a sanitary drainage system. Plumbing fixtures include water closets, lavatories, sinks, urinals, showers, bathtubs, laundry tubs, and drinking fountains. This chapter covers the installation and repair procedures for these fixtures.

WATER SUPPLY AND PIPING REQUIREMENT

4-1. A plumbing fixture must be supplied with a water flow rate that will fill it in a reasonable time. The pipe size required to supply each fixture depends on the psi pressure on the water main, the length of piping in the building, the number of fixtures and, for water closets, the types of flushing devices. *Table 4-1* shows the pipe diameter for various fixtures. (Refer *Chapter 6* for pipes and fittings.)

Table 4-1. Pipe Diameters for Plumbing Fixtures

Fixture	Pipe Diameter (in inches)
Lavatory	1/2
Shower	1/2
Bathtub	1/2
Kitchen sink	1/2
Slop sink	1/2
Scullery sink	3/4
Laundry tub	1/2
Drinking fountain	1/2
Water closet tank	1/2
Urinal with diaphragm-type flushometer	3/4
Water closet flushometer	1

WATER CLOSETS

4-2. A water closet is a fixture used to carry organic body wastes to the sewer system. Water closets are made of vitreous china. They can be installed on a

floor or suspended from a wall. They are available with various types of flushing action: washdown bowl, washdown bowl with jet, reverse-trap bowl, and siphon-jet bowl *(Figure 4-1)*.

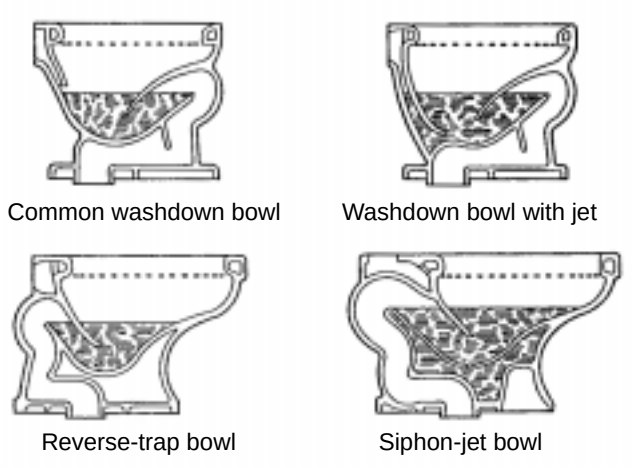

Figure 4-1. Water Closets

BOWLS

Types

4-3. Each type has a built-in trap containing a water seal, based on the same atmospheric pressure on both sides of the trap.

4-4. **Common Washdown Bowl.** This bowl is the least expensive and the simplest type of water closet. The trap is at the front of the bowl, and small streams of water running down from the rim flush the bowl.

4-5. **Washdown Bowl With Jet.** This bowl is similar to the washdown bowl but is flushed differently. The unit has a small hole in the bottom, which delivers a direct jet as the unit is flushed. The jet, directed into the upper arm of the trap, starts a siphoning action.

4-6. **Reverse-Trap Bowl**. This bowl is similar to the washdown bowl, except that the trap is at the rear of the bowl, making the bowl longer. This bowl holds more water than the washdown bowl and is quieter in operation.

4-7. **Siphon-Jet Bowl.** This bowl is the most efficient, the quietest, and the most expensive water closet. It looks like the reverse-trap bowl but holds more water. It is almost completely filled with water.

Installation

4-8. Water-closet bowls are either floor-mounted or wall hung.

NOTE: The method of installing water closet bowls is the same regardless of the flushing action.

4-9. **Floor-Mounted**. To install a floor-mounted water closet bowl, the following items and materials are needed: a floor flange, a water closet bowl, a level, a wrench, and a wax or rubber gasket. When installing a water closet, use the following steps and *Figure 4-2*.

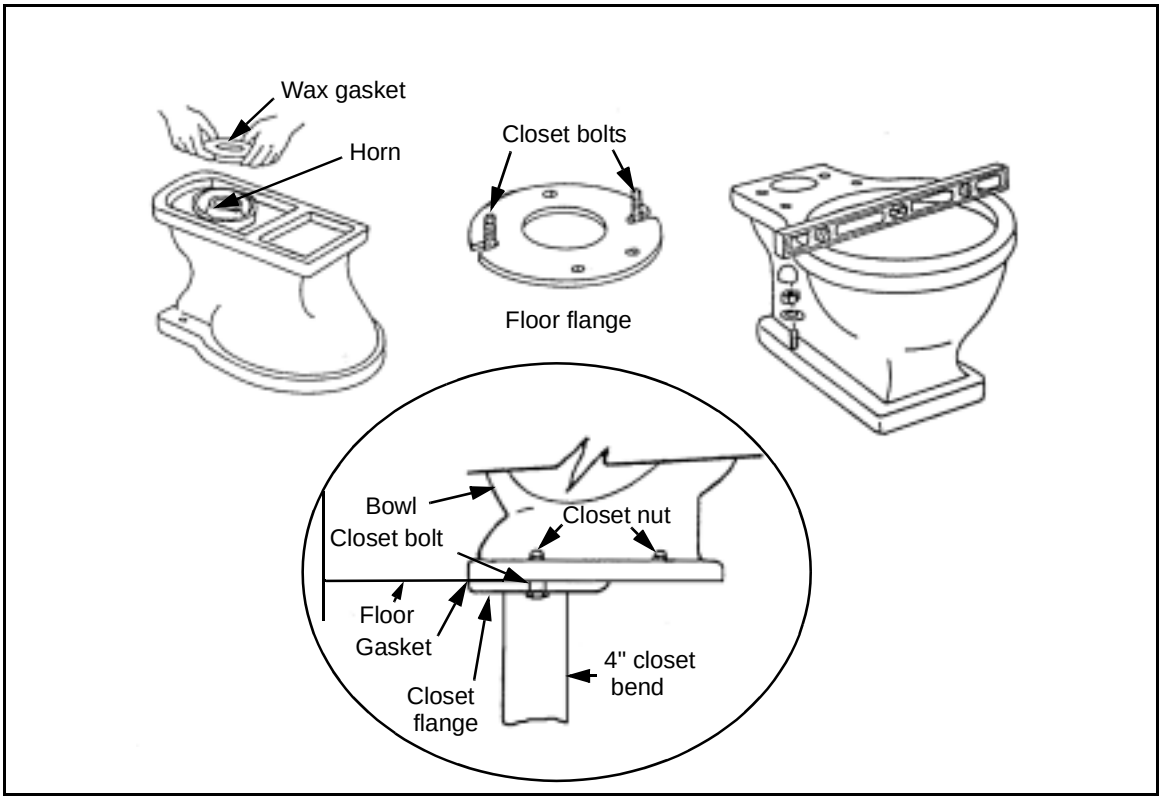

Figure 4-2. Floor-Mounted Water Closet Bowl

Step 1. Place the floor flange over the closet bend until the flange rests on the finished floor and then make a joint for the type of piping being used.

Step 2. Put two bowl bolts with their threaded ends up into the flange slots. If the bowl needs four bolts, place the bowl properly on the flange and mark the spots for the two additional bolts. Set these bolts into the positions marked. For a wood floor, use bolts with wood threads at one end and machine threads at the other end. For tile or concrete floors, set the heads of the machined bolts in the holes and fill with cement to floor level.

Step 3. Turn the bowl upside down on protective waste newspaper or wooden strips to avoid scratching. Set a wax gasket over the horn.

Step 4. Turn the bowl right side up and set it on the flange with the bolts through the holes of the bowl.

Step 5. Place a washer and nut on each bolt, tightening each alternately until the bowl is set.

Step 6. Ensure that the bowl is in a level position. If it is not level, use thin metal shims to make it level.

Step 7. Place a nut cap on each nut and tighten down. Do not over tighten.

4-10. **Wall Hung.** Install the bowl after the finished wall is up. A wall-hung, water closet bowl is installed on a carrier mounted between the wall studs. This type of water closet is used mainly in commercial buildings, but may also be found in residential buildings. Use the following steps and *Figure 4-3* to hang a water closet bowl:

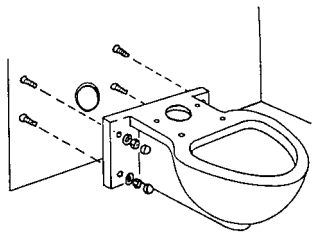

Figure 4-3. Wall-Hung Water Closet Bowl

Step 1. Install a carrier using the manufacturer's instructions.

Step 2. Connect the carrier's outlet to the rough-in waste pipe.

Step 3. Place a sealing gasket in the rear opening of the bowl.

Step 4. Place the bowl against the wall with the carrier's bolts passing through the bowl's holes.

Step 5. Place a washer and nut on each bolt.

Step 6. Keep the bowl level and tighten the nuts alternately.

Step 7. Place beauty caps over the bolts.

TANKS

4-11. Tanks are classified as close-coupled (floor-mounted) or wall hung. A close-coupled tank is attached to a floor-mounted bowl. A wall-hung tank is attached to the wall above the bowl, using fittings for the bowl connection. The flushing mechanism is the same for both types.

Close-Coupled (Floor-Mounted)

4-12. To mount a floor-mounted tank, use the following steps and *Figure 4-4*.

Step 1. Push the cone-shaped gasket over the tank's flush-valve outlet. Place the cushion gasket (if included) on the bowl and line up the holes.

Step 2. Place the tank on the bowl with the bolt holes lined up.

Step 3. Slide a rubber washer on each bolt and, from inside the tank, push the bolts through the holes.

Step 4. Slide a washer over each bolt under the back lip of the bowl and tighten the nuts hand tight.

Step 5. Tighten the nuts alternately to seat the cone gasket and tank on the bowl.

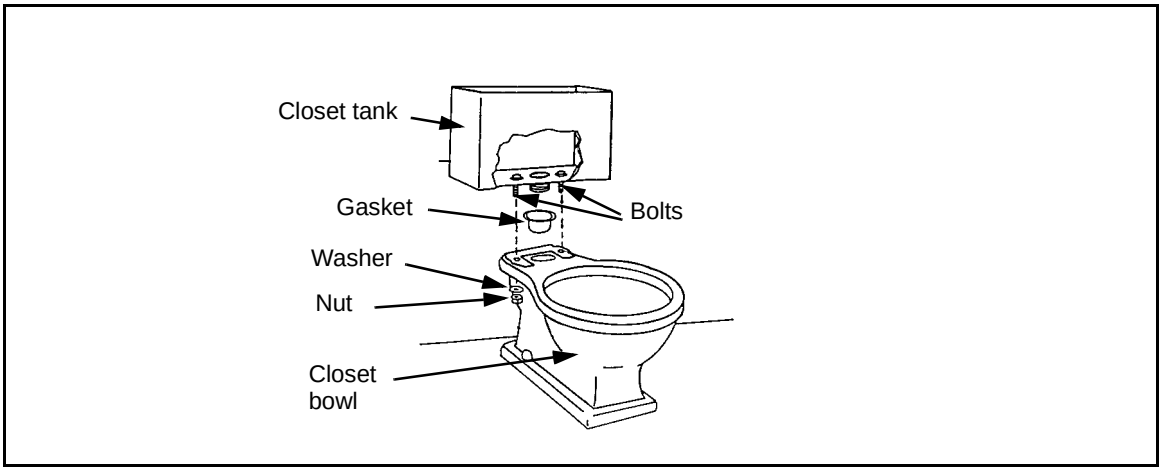

Figure 4-4. Floor-Mounted Tank

Wall Hung

4-13. To mount a wall-hung tank, use the following steps and *Figure 4-5*.

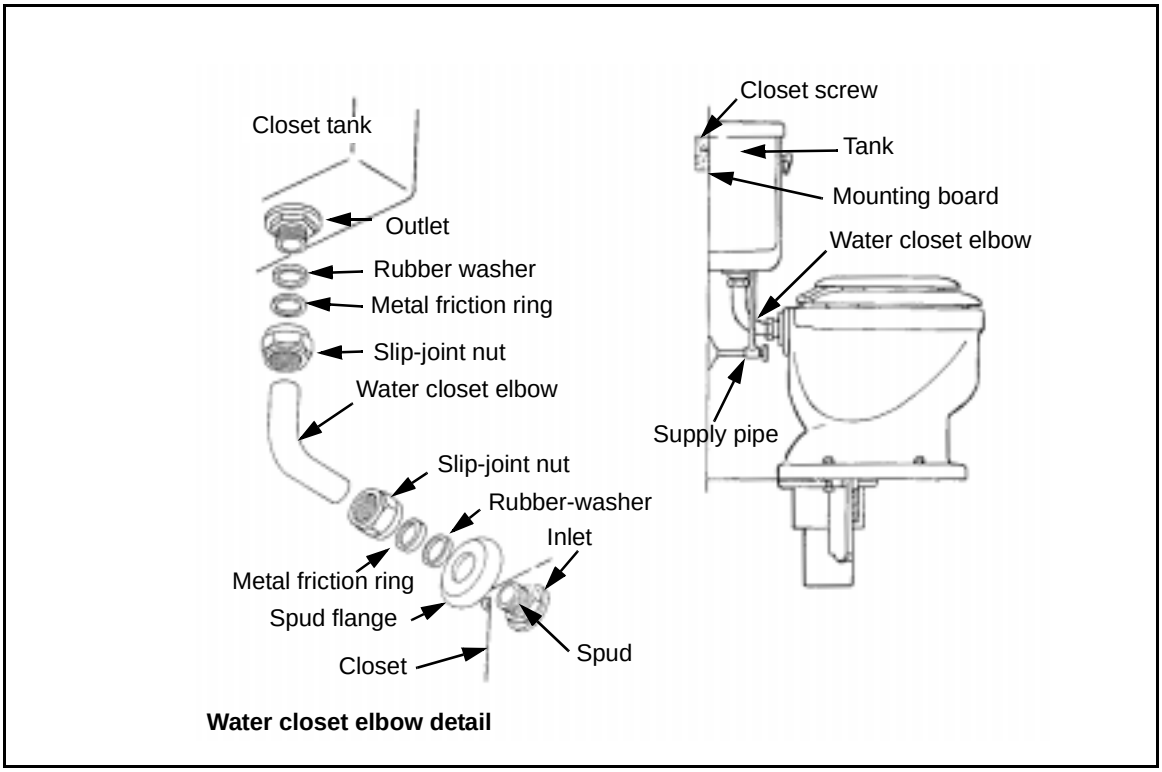

Figure 4-5. Wall-Hung Tank

Step 1. Install a 2- by 4-inch mounting board by notching the wall studs at the height recommended by the manufacturer.

Step 2. Install the elbow and spud connection (flange) to the rear of the bowl.

Step 3. Slide the slip nut, ring, and washer (in that order) onto the other end of the elbow.

Step 4. Attach the tank to the wall's mounting board with screw bolts. Make sure the elbow is in the tank's outlet and the tank is level.

Step 5. Check the elbow alignment and tighten the slip-joint nuts.

FLUSHING MECHANISMS

4-14. *Figure 4-6* shows tank mechanisms and flushometers.

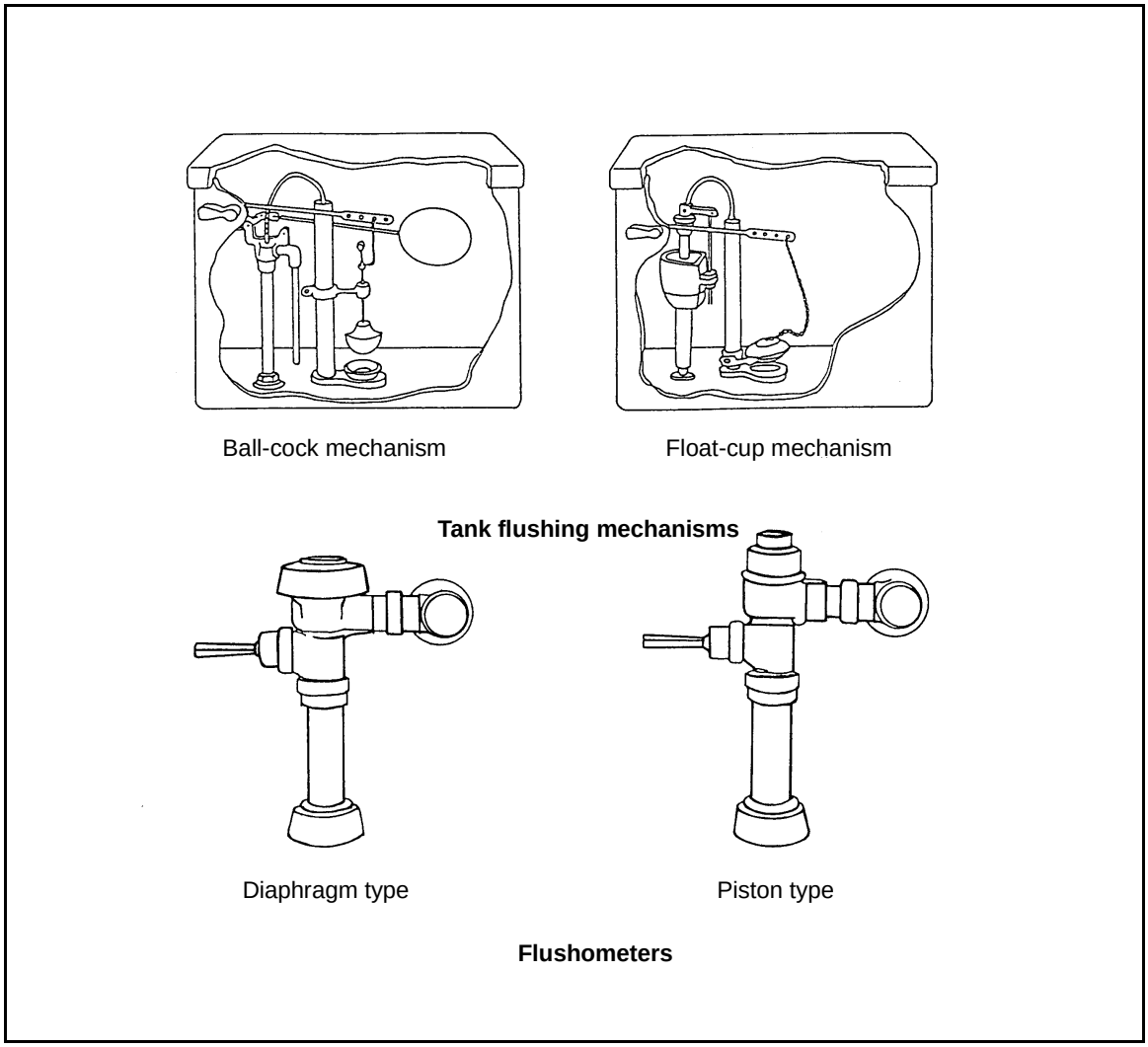

Figure 4-6. Flushing Mechanisms

Tank Flushing Mechanisms

4-15. A tank's flushing mechanism is mechanically operated to flush the water closet. The two most common mechanisms are the ball cock and float cup *(Figure 4-6)*. Follow manufacturer's instructions to install a flushing

mechanism in a tank. After installation, connect the water supply service, check the flushing mechanism's operation, and adjust it to maintain the proper water level in the tank.

Flushometers

4-16. The flushometer valve delivers (under pressure) a preset amount of water directly into a water closet for flushing. The flushing action is quick and shuts off automatically. Always follow the manufacturer's instructions to install a flushometer. After installation, turn on the water supply and operate the flushometer several times, checking for leaks and proper operation. The most common type of flushometer valves are the diaphragm and the piston *(Figure 4-6)*.

TANK WATER SUPPLY CONNECTION

4-17. The water supply is connected from the rough-in plumbing to a shutoff valve and from the valve to the inlet at the bottom of the tank. Use *Figure 4-7* and the following steps to connect the water supply:

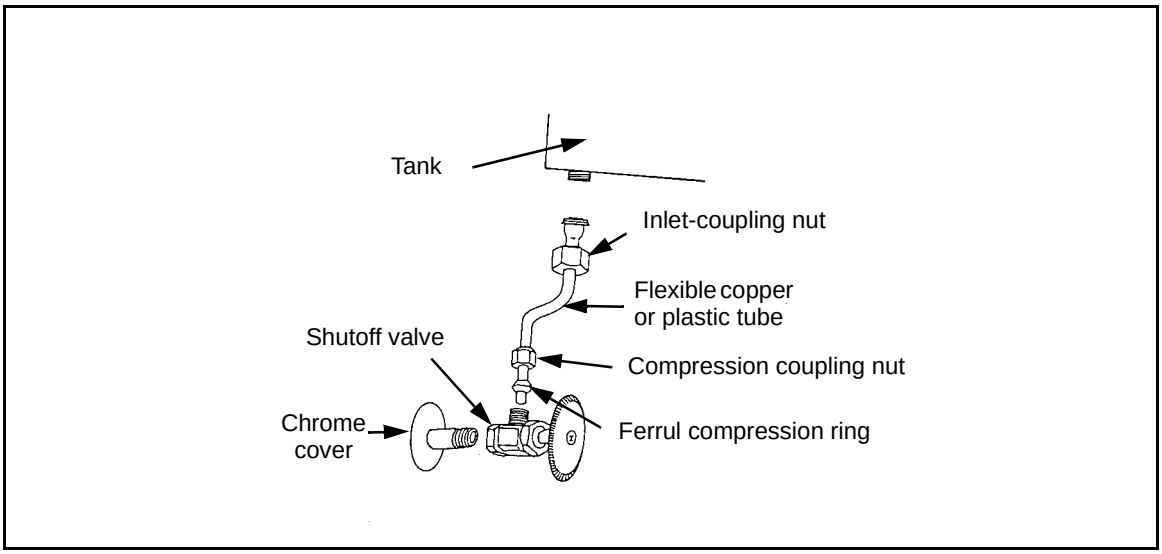

Figure 4-7. Tank Water Supply Connection

Step 1. Slide the chrome cover on the pipe projecting out from the wall and push it against the wall.

Step 2. Coat the threads with joint compound or Teflon® tape and screw the shutoff valve onto the pipe. Tighten the valve so that its other opening is straight.

Step 3. Bend the flexible tube with a spring bender to get a proper fit. (Steel-coated flexible supply lines are commonly used.)

Step 4. Slide the inlet-coupling nut on with the tubing threads up, and attach it to the tank's inlet and tighten hand tight.

Step 5. Slide the coupling nut threads and compression ring down onto the tubing. Screw the coupling nut onto the valve hand tight.

Step 6. Tighten the inlet-coupling nut and valve-coupling nut.

Step 7. Open the shutoff valve for the water supply and check for leaks.

Step 8. Adjust to get a proper water level of 1 inch below the top of the overflow tube. If an adjustment is made, check the operation.

Step 9. Place the tank cover on the tank and install the water closet seat.

REPAIRS AND MAINTENANCE

4-18. See *Chapter 3* for water-closet stoppages.

Flushometers

4-19. When the valve is not flushing or will not stop flushing, repair the flushometer *(Figure 4-8)*. If the flushometer is a—

- Diaphragm-type,

  Step 1. Turn off the water supply and remove the outer cover.

  Step 2. Remove the inner core. If the cover will not remove easily, pry it off with a screwdriver.

  Step 3. Remove the relief valve.

  Step 4. Remove the valve seat.

  Step 5. Remove the clogged or worn diaphragm and clean.

  Step 6. Install the new diaphragm.

  Step 7. Reassemble the valve.

  Step 8. Turn the water supply on and check the valve's operation.

- Piston-type,

  Step 1. Turn the water supply off and remove the outer cover and gasket.

  Step 2. Remove the inner cover and the gasket.

  Step 3. Remove the brass screws and retaining plate.

  Step 4. Remove the clogged or worn rubber cup.

  Step 5. Install the new rubber cup.

  Step 6. Reassemble the valve.

  Step 7. Turn the water supply on and check the valve's operation.

4-20. Use the steps below to repair handles *(Figure 4-9, page 4-10)* when there is a—

- Water leak at the handle.

  Step 1. Turn the water supply off at the angle valve and unscrew the retaining nut.

  Step 2. Pull out the handle body containing all the parts up to the packing nut.

  Step 3. Grip the handle body with a wrench and unscrew the packing nut with another wrench.

  Step 4. Remove the worn packing washer and install the new packing washer.

  Step 5. Reassemble all the parts.

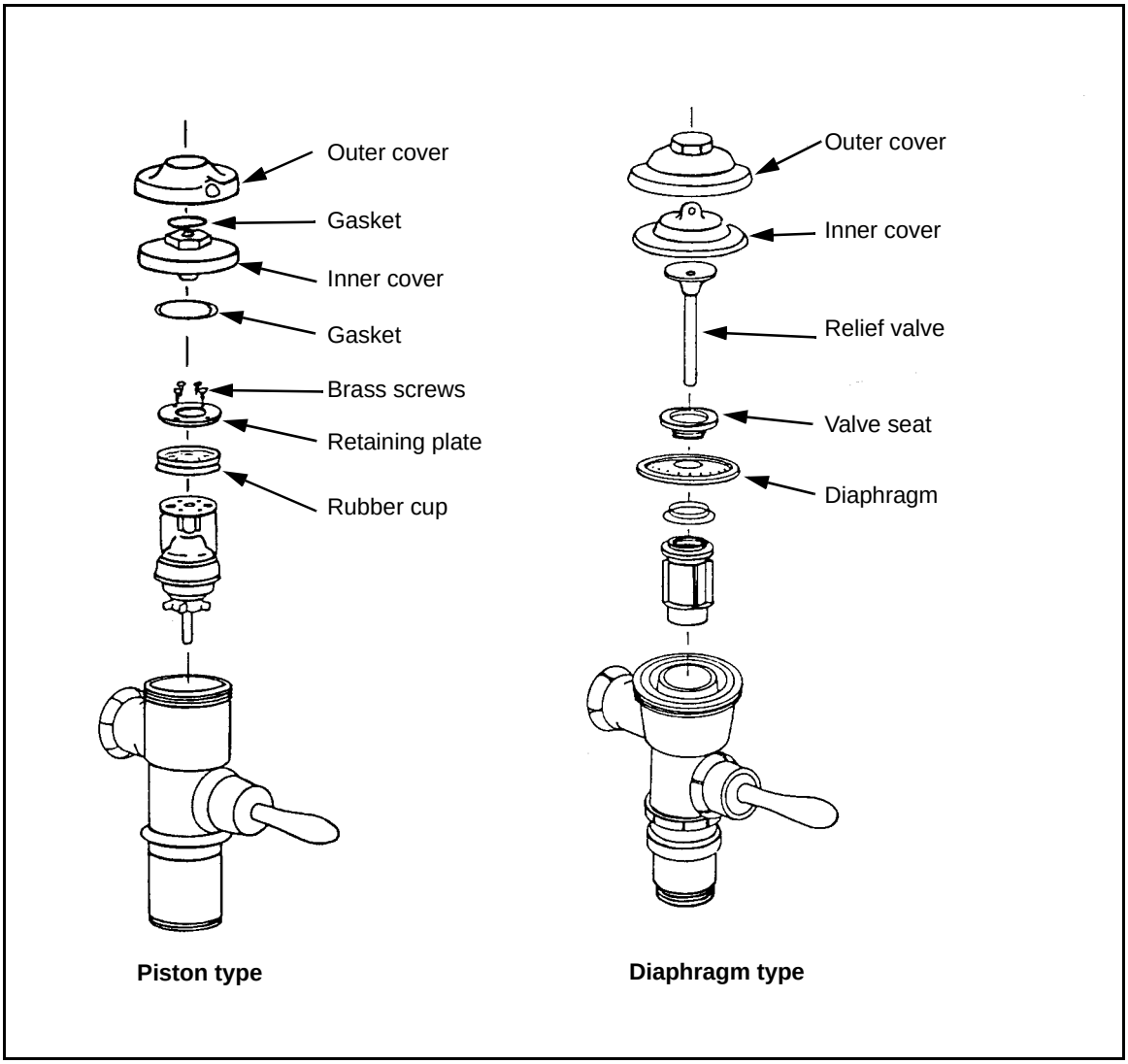

Figure 4-8. Flushometer Repairs

Step 6. Turn the water supply on and check the handle for leaks and for proper operation.

NOTE: Replace the Mylar® seal and tighten the retaining nut.

- Loose or wobbly handle.

  Step 1. Turn the water supply off at the angle valve and unscrew the retaining nut.

  Step 2. Pull out the handle body containing all the parts up to the packing nut.

  Step 3. Grip the handle body with a wrench and unscrew the packing nut with another wrench.

  Step 4. Grip the handle body with a wrench and unscrew the bushing with lock-grip pliers.

Step 5. Remove the worn bushing spring or plunger and replace worn parts with new ones.

Step 6. Reassemble all the parts.

Step 7. Turn the water supply on and check the handle for leaks and for proper operation.

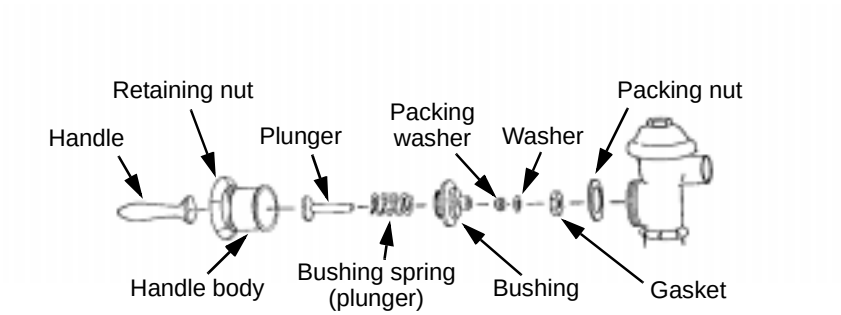

Figure 4-9. Flushometer Handle Repair

Tank Flushing Mechanisms

4-21. Fixture control devices are used for flushing water closets, holding water in a lavatory bowl, and draining waste. These devices get much usage and wear *(Figure 4-10)*. Use the procedures below for ball-cock and float-cup repairs.

4-22. **Ball-Cock Repairs.** Use the following steps to make repairs to the ball cock when—

- The water level is so high that it is running into the top of the overflow pipe.

  Step 1. Remove the tank top and unscrew the float ball from the float rod.

  Step 2. Shake the float ball to find out if water is in the ball. If water is inside the ball, replace the ball. If no water is in the ball, the float ball is functional.

  Step 3. Screw the float ball back onto the rod.

  Step 4. Place both hands on the middle of the float rod and carefully bend the ball side of the rod down about 1/2 inch.

  Step 5. Flush the water closet to see that the water level is about one inch below the top of the overflow pipe and then replace the tank top.

- There is water running in a water closet.

  Step 1. Remove the tank top and turn off the water supply at the shutoff valve.

  Step 2. Flush the water closet to empty the tank.

  Step 3. Unscrew the flush (tank) ball from the lift wire.

  Step 4. Check the bottom of the flush ball for damage or wear.

  Step 5. If the flush ball is damaged or worn, replace it with a new one.

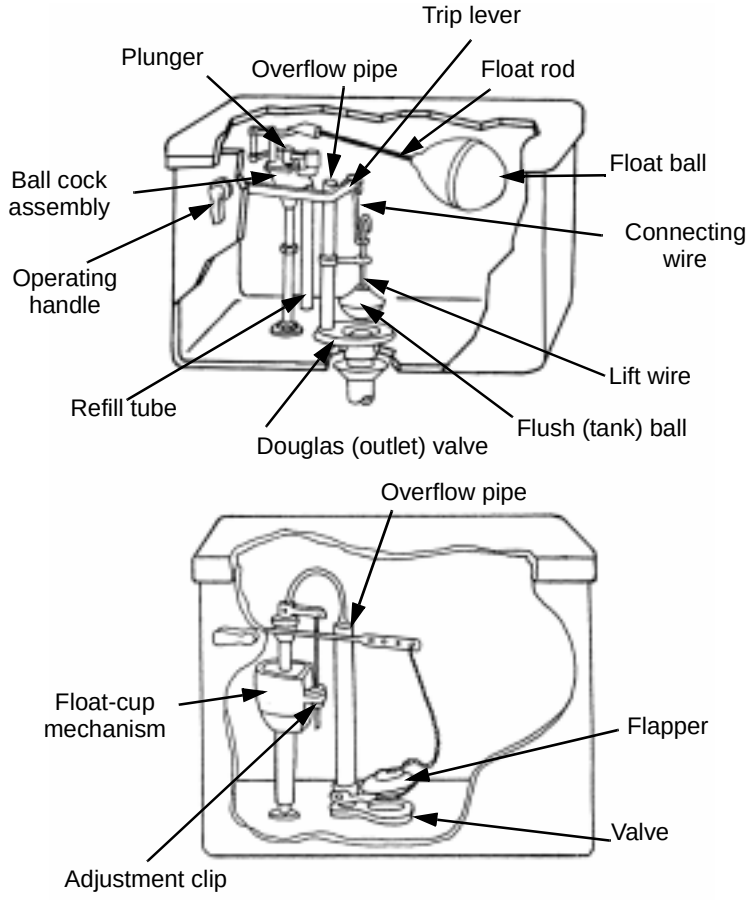

Figure 4-10. Tank Mechanism Repairs

Step 6. Clean the flush outlet valve seat with emery cloth or steel wool.

Step 7. Operate the handle to see that the flush ball sits evenly in the flush-outlet valve.

Step 8. Turn the water supply on and flush the water closet to check the repair. Replace the tank top.

- There is a faulty ball cock operation.

Step 1. Remove the tank top and turn the water supply off.

Step 2. Flush the water closet to empty the tank.

Step 3. Remove the float rod with the float ball attached.

Step 4. Remove the screws or pins at the top of the ball cock assembly.

Step 5. Lift the plunger out of the assembly.

Step 6. Remove the washer located under the bottom of the plunger and O-ring from around the plunger and replace them.

Step 7. Reassemble the ball cock assembly float rod with a float ball attached.

Step 8. Turn the water supply on and check the ball cock.

4-23. **Float-Cup Repairs.** Use the following steps to make repairs to the float cup when—

- The water level is so high that it is running into the overflow pipe.

  Step 1. Remove the tank top. Squeeze the top and bottom of the adjustment clip and move it down on the pull rod to lower the float cup.

  Step 2. Flush the tank and then check the incoming water level. The level should be about one inch below the top of the overflow pipe.

  Step 3. Replace the tank top if the level is correct. If the level is not correct, repeat steps 1 and 2 until it is correct.

  Step 4. Replace the tank top.

- Water is running in the water closet.

  Step 1. Remove the tank top. Turn off the water supply at the shutoff valve and flush the water closet.

  Step 2. Lift up the flapper and check the bottom for damage or wear. If the flapper is damaged or worn, replace it.

  Step 3. Clean the outlet valve seat with emery cloth or steel wool.

  Step 4. Operate the handle to ensure that the flapper sits evenly in the outlet valve.

  Step 5. Turn the water supply on and flush the water closet to check the repair. Replace the tank top.

LAVATORIES

4-24. A lavatory is designed for washing one's hands and face. Lavatories come in a variety of shapes, sizes, and colors. They are made of vitreous china, enameled cast iron, stainless steel, and plastic. Hot and cold water is supplied through the supply system and the waste drains into the sanitary sewer.

TYPES

4-25. *Figure 4-11* shows examples of wall-hung, vanity, pedestal, and trough lavatories.

Wall Hung

4-26. This lavatory hangs on a bracket attached to the wall. It may or may not have legs for added support.

Vanity

4-27. Vanities are installed on a cabinet or counter.

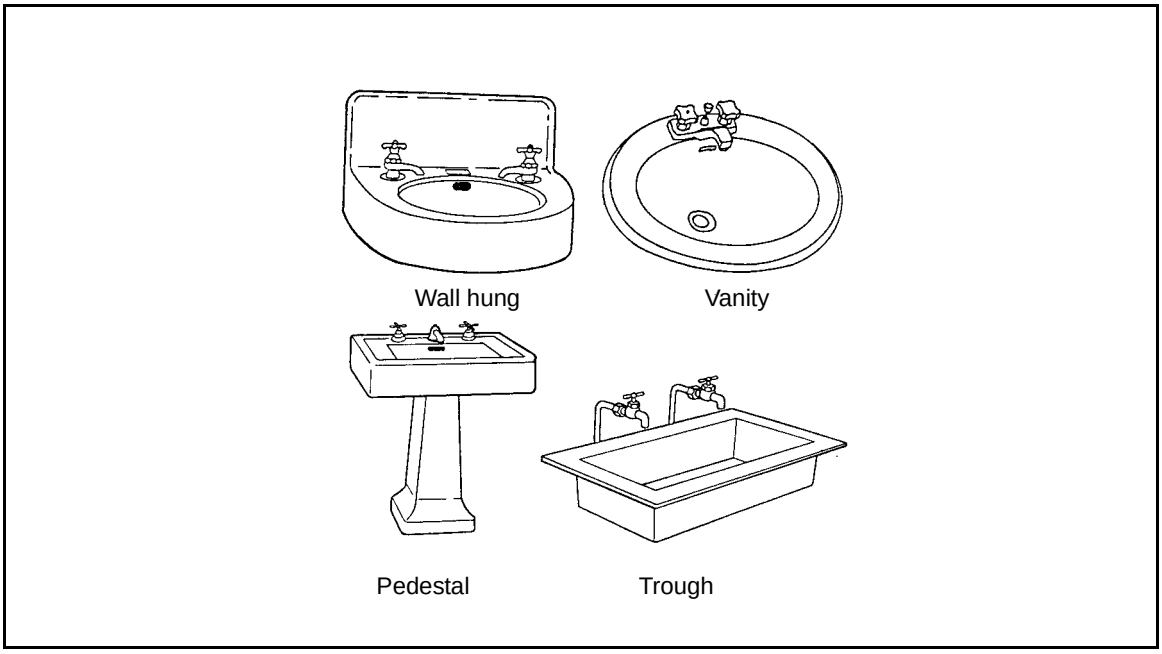

Figure 4-11. Lavatories

Pedestal

4-28. This lavatory's weight rests on the floor and does not require support.

Trough

4-29. This lavatory is mostly used in commercial plants and certain military facilities.

INSTALLATION

Wall Hung

4-30. Use the following steps, the manufacturer's instructions, and *Figure 4-12, page 4-14,* to install a wall-hung lavatory:

Step 1. Install the mounting board between the studs at the proper height, using the same method as for a wall-hung flush tank *(paragraph 4-10, page 4-4).*

NOTE: Refer to the manufacturer's specifications and plans for the required height and elevation.

Step 2. Attach a hanger bracket on the finished wall using the proper length of wood screws at the recommended height. The metal bracket must be level.

Step 3. Place the lavatory on the bracket and push down. Make sure the lavatory is level.

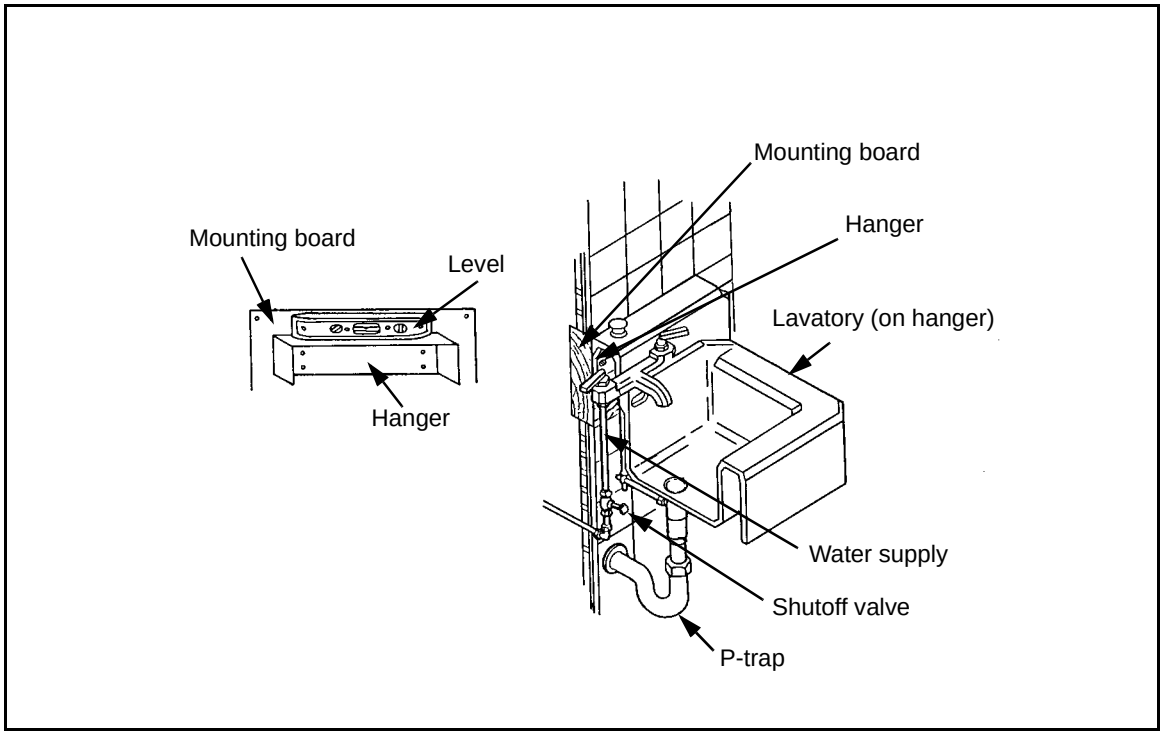

Figure 4-12. Wall-Hung Lavatory Installation

Faucets

4-31. See *Chapter 7* for faucet installation and repairs.

Drain Assembly

4-32. The waste from the lavatory may be released by either a chain-type plug or a pop-up plug *(Figure 4-13)*. Installation of the flange is the same for both types. (Follow manufacturer's instructions to install the pop-up plug mechanism to attach the tailpiece.) To install a flange—

Step 1. Apply a ring of plumber's putty around the drain outlet and set the flange firmly into the outlet.

Step 2. Connect the flange to the bowl with a washer and locknut.

Step 3. Coat the flange threads with pipe-joint compound and screw on the tailpiece.

Step 4. Connect the P-trap between the rough-in waste outlet and the tailpiece *(Figure 4-14)*. All connections should be made with washers and slip nuts to form leakproof joints.

Water Supply Connection

4-33. *Figure 4-15, page 4-16,* shows how to connect water services (hot and cold) for a lavatory. After installation, turn the water supply on and check for leaks.

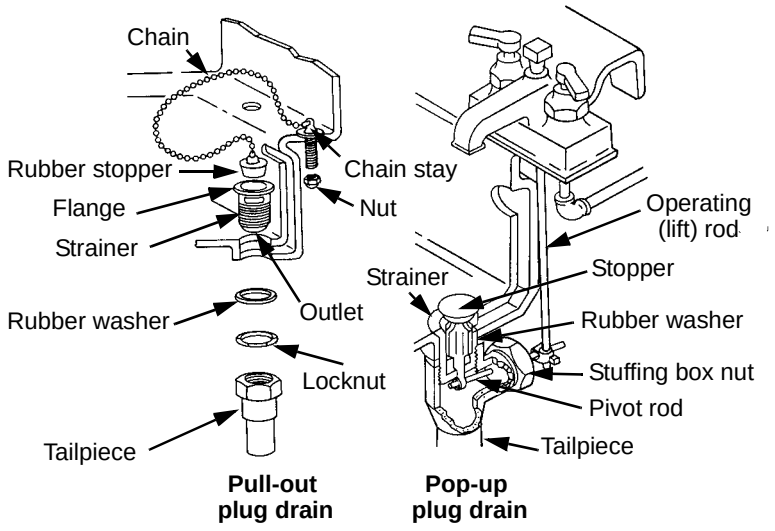

Figure 4-13. Drain-Plug Assembly

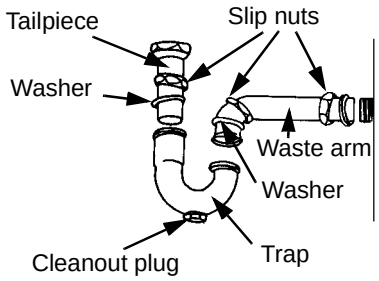

Figure 4-14. P-Trap Connection

POP-UP PLUG REPAIRS

4-34. Use the repair steps below when the pop-up plug (stopper) fails to keep water in the bowl *(Figure 4-16, page 4-17).*

Step 1. Loosen the clevis screw with pliers.

Step 2. Push the pop-up plug (stopper) down so that it sits snugly on the flange.

Step 3. Tighten the clevis screw. Ensure that it fits snugly on the flange.

Step 4. Squeeze the spring clip and pull out the pivot rod from the clevis hole. The stopper then should operate easily. Place the pivot rod through the next higher or lower hole in the clevis.

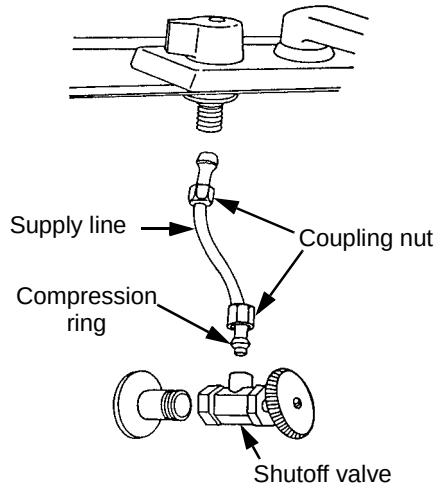

Figure 4-15. Water Supply Connection

Step 5. Close the stopper and fill the bowl with water.

Step 6. Check the water level to ensure that the stopper holds water in the bowl.

NOTE: If steps 1-6 do not fix the problem, continue by using the following steps:

Step 7. Tighten the pivot-ball retaining nut. If the leak continues, remove the nut with pliers.

Step 8. Squeeze the spring clip, sliding the pivot rod out of the clevis hole.

Step 9. Slide the pivot-ball retaining nut and worn washers off the pivot rod.

Step 10. Slide new washers (plastic or rubber) and the ball nut onto the pivot rod and tighten the pivot ball.

Step 11. Reassemble the pivot rod into the clevis hole.

Step 12. Run water into the lavatory and check the connection for leaks.

NOTE: Check the pop-up stopper's ability to hold water after repairing the pivot-ball connection.

SINKS

4-35. Sinks are available for different uses and come in several sizes and shapes *(Figure 4-17)*. They are made of enameled cast iron, enameled pressed-steel, galvanized steel, and stainless steel. (Refer to *Chapter 7* for faucet installation.)

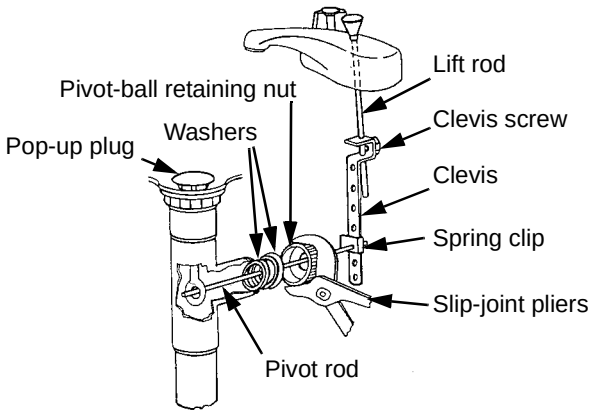

Figure 4-16. Pop-Up Plug Repairs

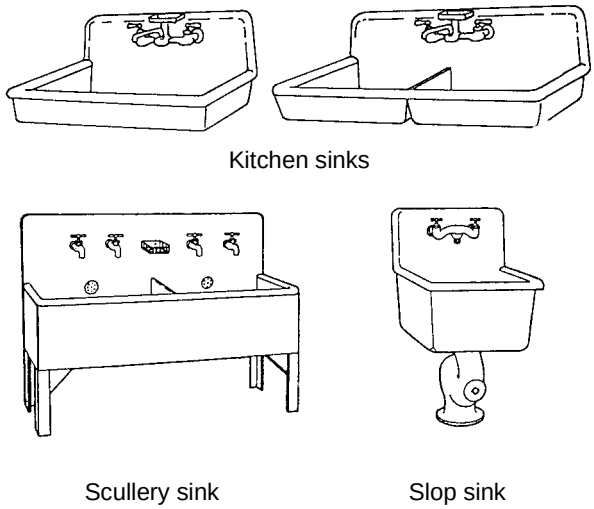

Figure 4-17. Sinks

SCULLERY SINK

4-36. Scullery sinks are large, deep sinks used in mess-hall-type facilities. Scullery sinks need only installation of faucets and connection to waste- and water supply lines.

SLOP SINK

4-37. Slop sinks are used for buckets and mops.

KITCHEN SINK

4-38. Kitchen sinks can be either single- or double-compartment and can be wall hung or set in a counter top. Kitchen sinks have a strainer to prevent food waste from entering the waste system *(Figure 4-18)*. Connect the water service the same as for a lavatory *(refer to Figure 4-15, page 4-16)*.

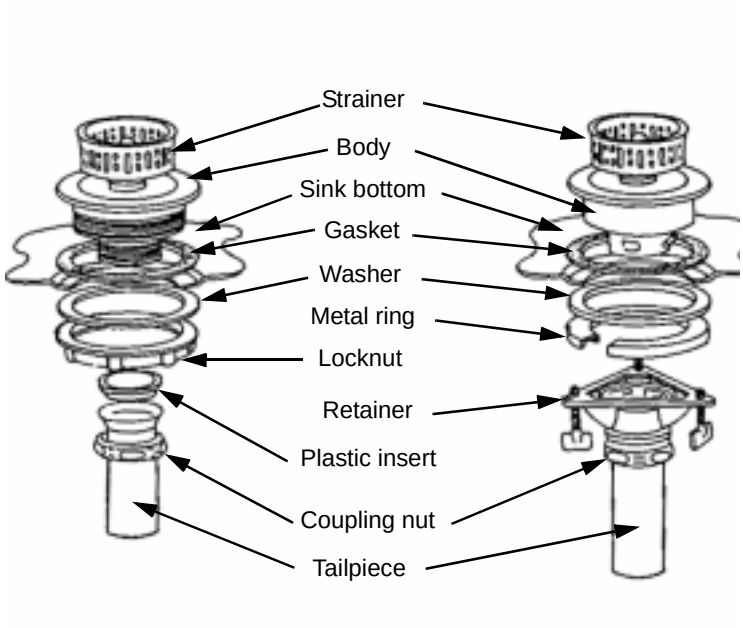

Figure 4-18. Kitchen Sink Drain Assembly

URINALS

4-39. A urinal is a fixture that carries human liquid waste to the sewer. It is made of vitreous china or enameled cast-iron.

TYPES

4-40. Urinal types are wall hung, stall, and trough *(Figure 4-19)*.

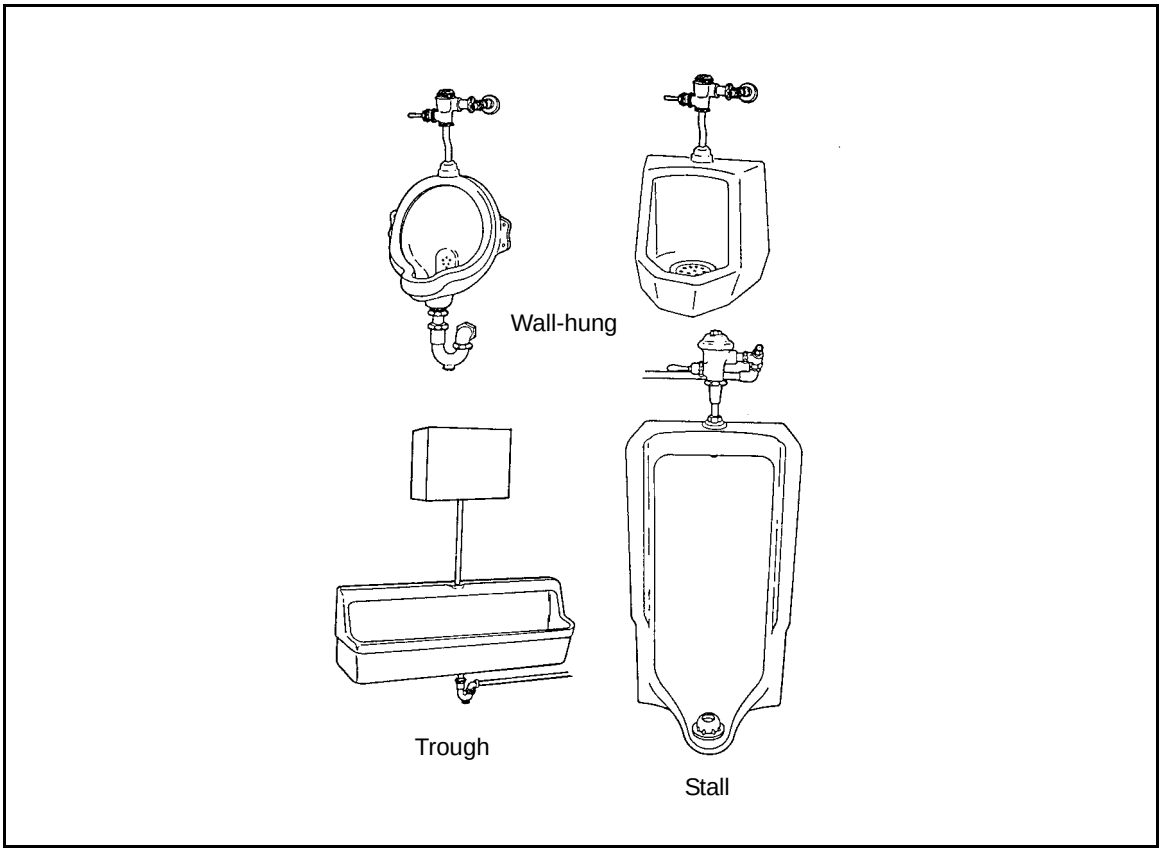

Figure 4-19. Urinals

Wall Hung

4-41. This urinal can have a built-in water-seal trap or a P-trap with a washdown or siphon-jet flushing action. The flushing device for a wall-hung urinal is a flushometer valve.

Stall

4-42. The stall urinal is set into the floor. A beehive strainer covers the waste outlet, which is caulked to a P-trap below floor level. The flushing action is the washdown-type produced by a flushometer valve.

Trough

4-43. A trough urinal is wall hung with a flush tank. The urinal has perforated pipe across the rear, which allows water to flow down the back of the trough when flushed.

INSTALLATION

Wall Hung

4-44. Use the following steps and the manufacturer's instructions to hang a wall-hung urinal:

Step 1. Install the mounting board and bracket.

Step 2. Install the urinal on the bracket.

Step 3. Make the waste connection to the rough-in piping.

Step 4. Make the water connection to the rough-in piping to include the flushometer valve.

Step 5. Turn on the main water supply and flush the urinal several times to check for leaks.

Trough

4-45. Use the following steps and the manufacturer's instructions or military construction drawing to hang a trough urinal:

Step 1. Install the mounting board for the trough and tank.

Step 2. Attach the tank to the wall and install the flushing mechanism.

Step 3. Install the hanger for the trough bowl.

Step 4. Attach the bowl to the wall.

Step 5. Install the waste connection to the rough-in piping.

Step 6. Install the piping from the tank to the trough bowl.

Step 7. Install a water line between the tank and the rough-in piping.

Step 8. Turn on the main water supply and flush the urinal several times to check for leaks.

Flushometers

4-46. Refer to *paragraph 4-16, page 4-7,* for flushometers.

SHOWERS

4-47. A shower has many advantages over a bathtub which include—the small amount of space required for installation, the small amount of water used compared with bathtub use, and sanitation. *Figure 4-20* shows the types of showerheads. The two types of individual shower installations are: tiled and the steel-stall. (Group showers are usually tile or concrete.)

TYPES

Tile

4-48. The tile shower has tile or marble walls on three sides with a waterproof shower curtain or door that can be closed while the shower is in use. The tiled floor slopes to the center (or rear) where a drain is placed. The wall should be waterproofed by setting the tile in waterproof cement. The floor is generally laid upon a lead shower pan, which forms a waterproof base on which to lay the tile, as shown in *Figure 4-21*.

Stall

4-49. The stall shower is a prefabricated unit with three sides and a base, fitted together. The sides are thin sheets of grooved steel, fitted together with a watertight joint. The base is usually precast concrete. Spray from the

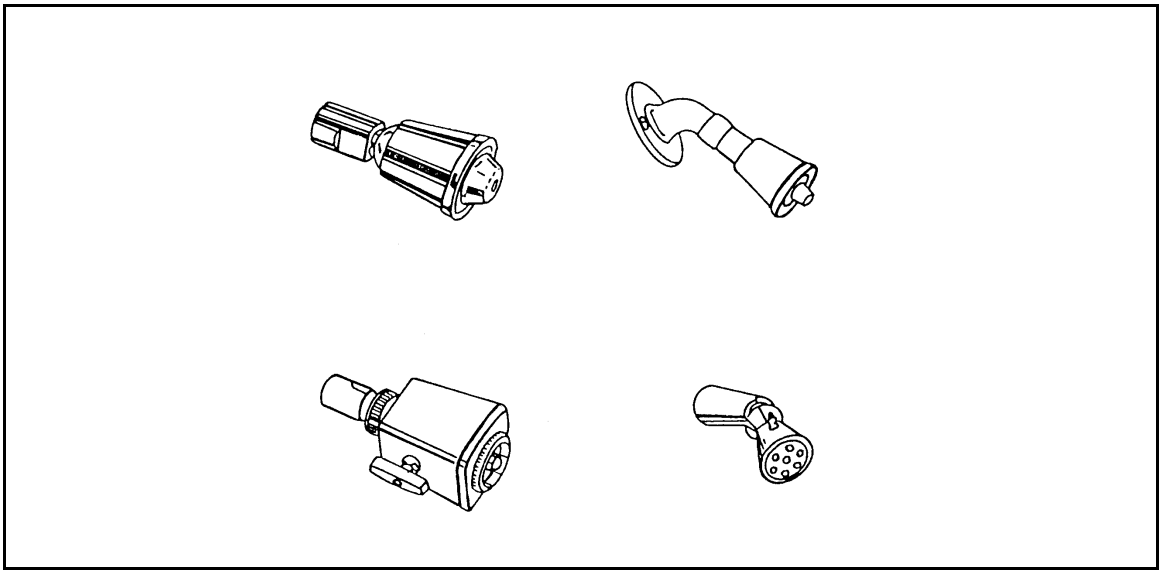

Figure 4-20. Showerheads

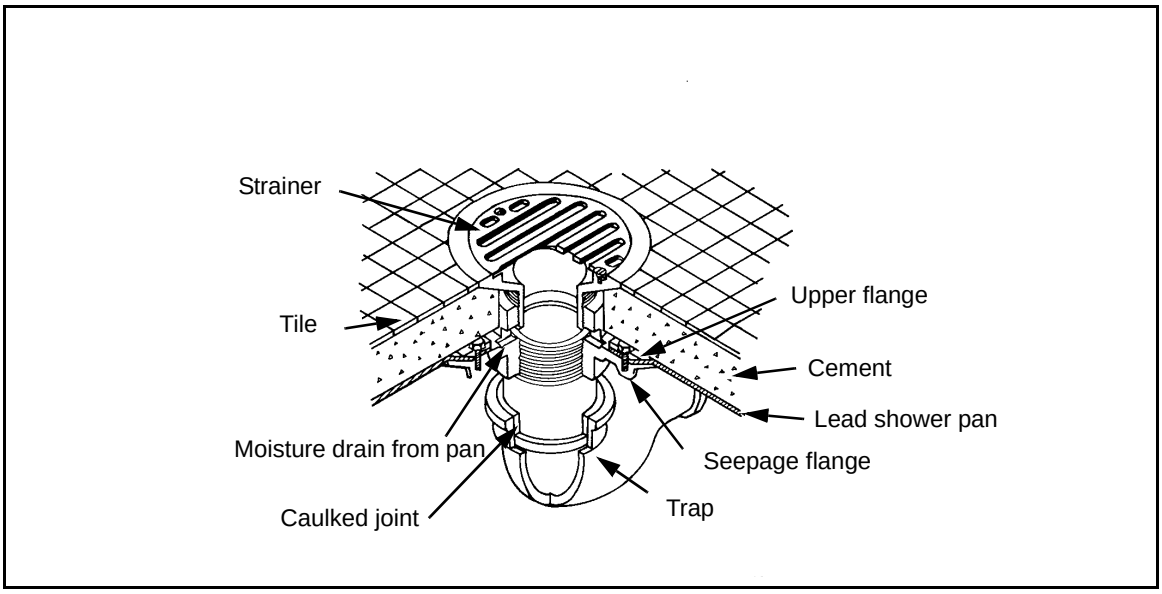

Figure 4-21. Shower Pan Installation

showerhead causes considerable noise as it hits the thin steel, and the metal sides tend to rust rapidly.

INSTALLATION

4-50. Complete waterproofing is the most important requirement of shower installation. Tile installed with good-quality waterproof cement provides a waterproofed wall. For the floor, a waterproof base (shower pan) under the shower is necessary, since water standing on the tile surface can seep through and cause leaks. (Refer to *Chapter 7* for faucet assembly and installation.)

Lead Shower Pan

4-51. Before installing the lead shower pan, a carpenter must rough in the general outline of the stall and lay a solid base of subflooring or plywood. Without a solid base, the shower pan is soft and flexible. If not supported properly, the pan will sag and leak under the weight of the tile. Inspect the rough in of the trap underneath the flooring to ensure that the outlet is correctly placed.

4-52. Many types of shower drains are available. The one in *Figure 4-21, page 4-21,* has the proper-length nipple for placing the seepage flange at a level with the lead pan threaded into the nipple. The lead pan is made by using a solid sheet of lead 6 to 8 inches larger than the size of the shower floor and bending up the edges at right angles to the desired height. Use *Figure 4-21* and the following procedure to install a lead shower pan:

Step 1. Cut a hole where the drain is located and lower the lead shower pan into place. The pan should rest firmly on the seepage flange of the shower drain.

Step 2. Coat the inside of the lead shower pan with asphalt.

Step 3. Place pipe-joint compound or putty under the top of the flange.

Step 4. Place the upper flange on top of the lower flange and attach them together to form a watertight joint between the shower waste and the shower pan.

Step 5. Thread the strainer down into the flanges to the desired level of the tile.

Step 6. Complete the installation by laying cement in the shower pan and tiling the floor.

Concrete Shower Pan

4-53. Concrete shower pans with prefabricated, steel shower stalls are easy to install. They are often set up after the original construction. In this case, the cement base is laid directly on top of the floor.

WATER SUPPLY CONNECTION

4-54. The water supply for a shower may be hidden in the wall or exposed. *Figure 4-22* shows exposed hot- and cold-water lines tied into a single water line ending in a showerhead. The cold-water line is brought in on the right side while the hot-water line is brought in on the left. A variety of faucet and valve combinations is available on unexposed installations *(Figure 4-23, page 4-24).* The compression valve provides a tempered water line of chromium-plated tubing, ending in a gooseneck and showerhead. In the single-handle mixing valve, the hot and cold water are mixed in a cast-brass mixing chamber. The handle controls a piston-like valve. By turning the valve handle clockwise, warmer water is supplied to the showerhead. A greater variety of showerheads than valves is available *(see Figure 4-20, page 4-21).*

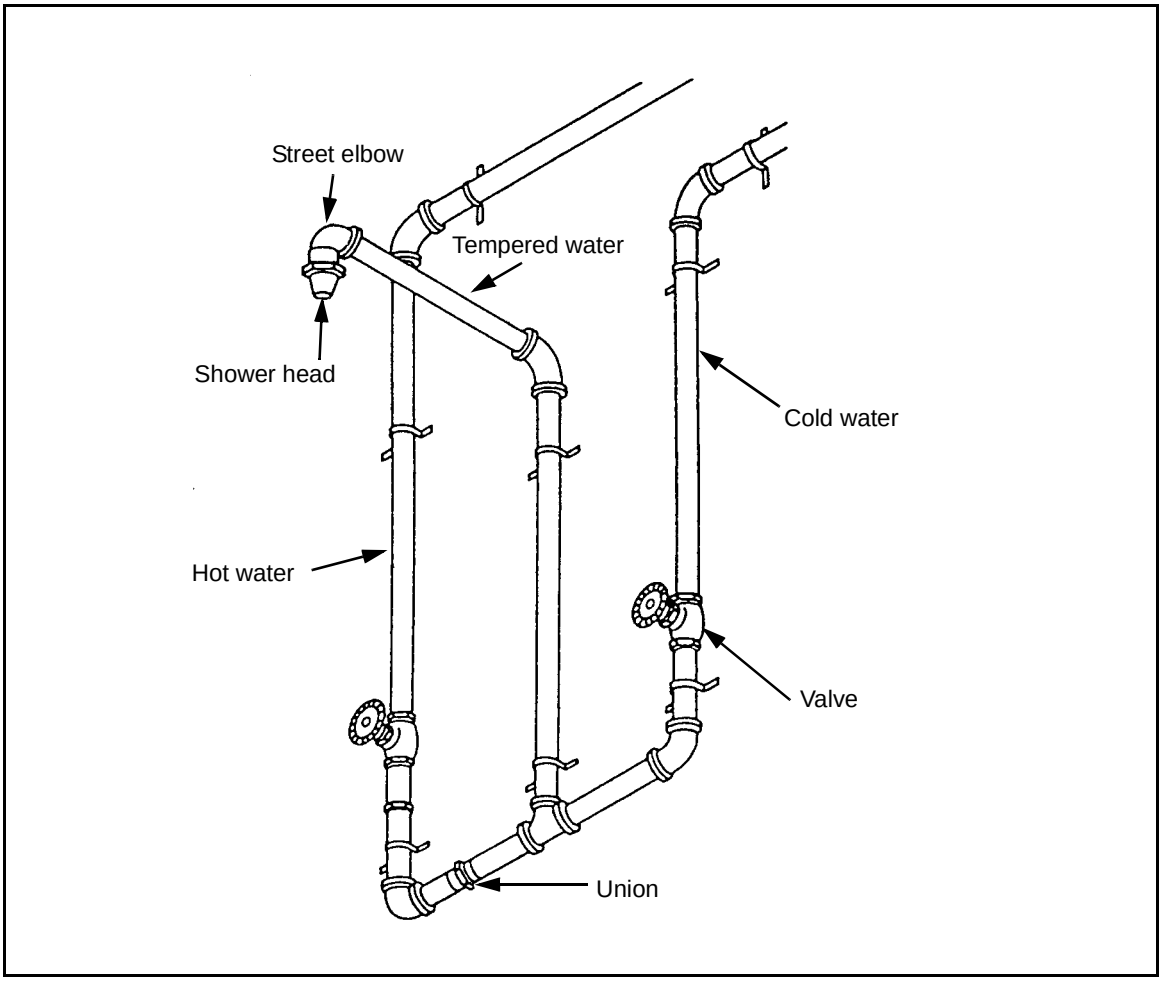

Figure 4-22. Shower With Exposed Piping

BATHTUBS

TYPES

4-55. A variety of built-in bathtubs is available. They are designed to be recessed for corner installation of square, rectangular, and angled tubs and tubs with one or more ledge seats. Tubs are made of enameled cast iron or steel and fiberglass.

INSTALLATION

4-56. Modern cast-iron tubs are designed to rest on the floor and fit against the wall framing (studs). They need no wall support, except that steel tubs have flanges supported by l- by 4-inch boards, nailed to the studs. Use a waterproofing cement to caulk the joint between the finished wall surface and the tub. Mount the over-rim tub filling, with or without a shower diverter, on the wall at one end of the tub. The drain may be the pull-out or pop-up type.

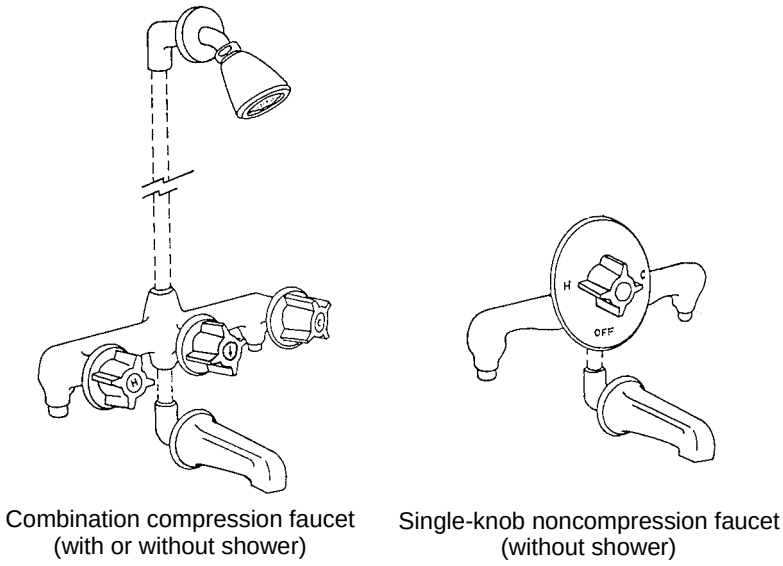

Combination compression faucet (with or without shower)

Single-knob noncompression faucet (without shower)

Figure 4-23. Showers With Unexposed Piping

Install removable service panel in the wall behind the tub to provide access to the trap and the water supply valve.

LAUNDRY TUBS

4-57. Laundry tubs are usually placed in the basement or utility room.

TYPES

4-58. The most common type is concrete with a metal rim, although enameled cast-iron/steel and plastic units are also available. They come in single- and double-compartment styles *(Figure 4-24)*.

INSTALLATION

4-59. Use the following steps and *Figure 4-25*, to install a tub (refer to *Chapter 7* for faucet installation):

Step 1. Assemble the metal stand by bolting its sections together.

Step 2. Place the stand in a convenient place in front of the rough-in piping and carefully set the tub on the stand.

Step 3. Connect the P-trap to the tub as shown in *Figure 4-25*.

Step 4. Connect a swing-combination faucet to the hot- and cold-water supply lines. Usually, the faucet is furnished with a hose bib for attaching a hose.

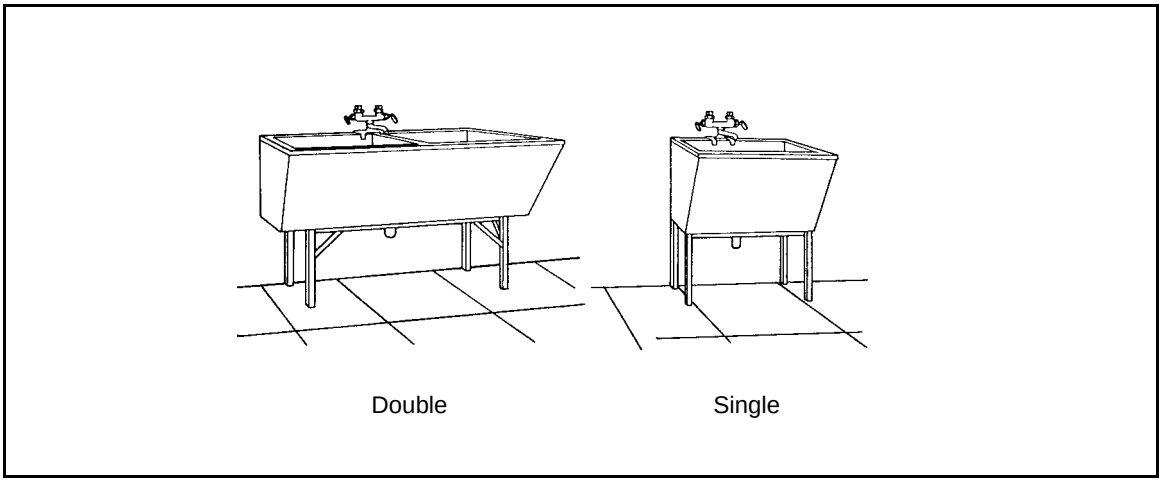

Figure 4-24. Laundry Tubs

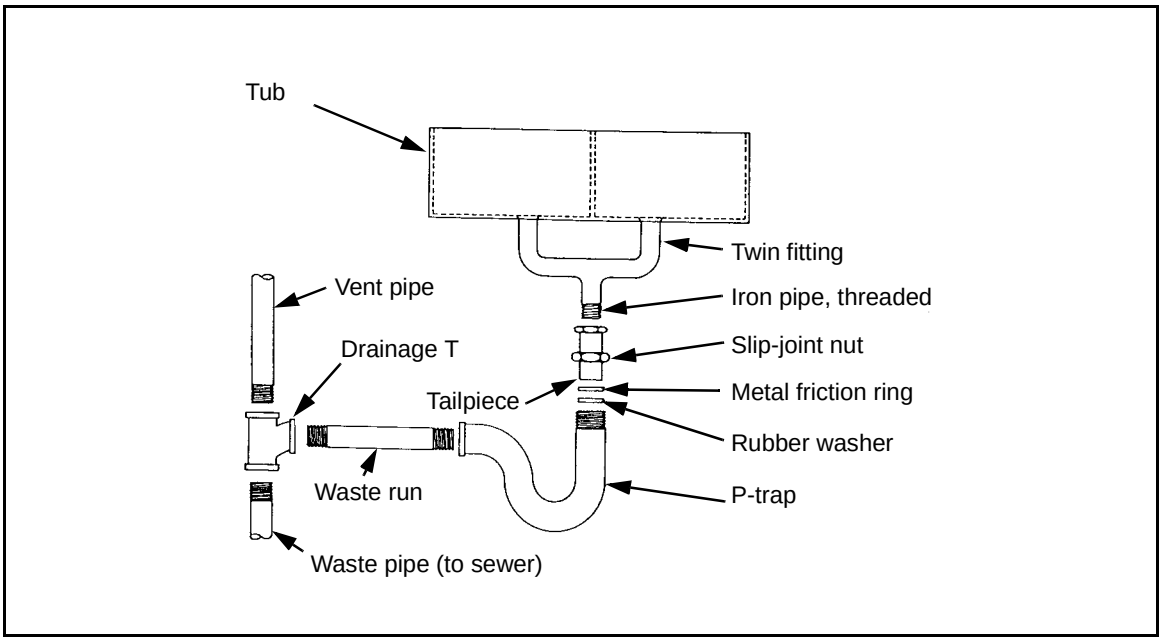

Figure 4-25. Laundry Tub Installation

DRINKING FOUNTAINS

4-60. Drinking fountains *(Figure 4-26, page 4-26)* are made of porcelain enameled steel, cast iron, or stainless steel.

TYPES

4-61. The three types of drinking fountains are the pedestal, wall-hung, and electrically cooled. The pedestal fountain needs no wall support. The wall-hung fountain is bolted to a mounting board on the wall. The electrically cooled fountain has a refrigerating unit in which the water supply tubing

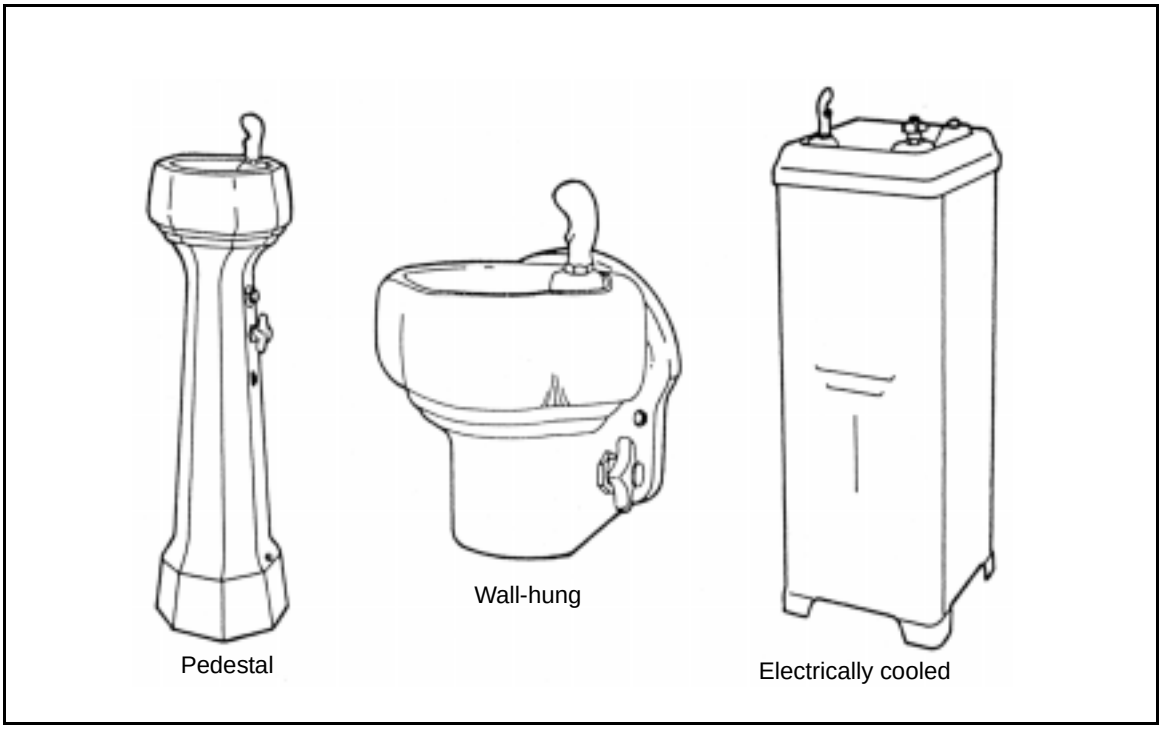

Figure 4-26. Water Fountains

passes over the refrigerating coils to be cooled before being supplied to the drinking outlet.

INSTALLATION

4-62. Sanitation is an extremely important consideration when installing drinking fountains. Water from the drinking outlet should not fall back on the bubbler head. The bubbler head should project at least 3/4 inch above the rim of the fountain and be located so that a person's mouth cannot touch it. The fountain drain should have a good strainer to keep chewing gum and other objects from entering the drain line.

4-63. Install fountains with the bubbler head at a height designed for the average user. Ensure that the mounting is sturdy to support considerable weight in addition to that of the fixture. Install a 1 1/4-inch P-trap below the waste pipe. The electrically cooled fountain requires a nearby electrical outlet. Follow the manufacturer's instructions when installing a water fountain.

Chapter 5

Water Heaters

Water heaters are classified into four categories: range boilers and gas, oil-burning, and electric water heaters. Each type should have a temperature- and pressure-relief valve and a sediment drain at the lowest part of the tank. Relief valves are set to allow water to blow into a drain line when the pressure exceeds 210 degrees Fahrenheit or when the pressure exceeds 125 psi.

TYPES

RANGE BOILERS

5-1. The range boiler is a hot-water storage tank, varying from 1 to 5 feet in diameter and from 6 to 15 feet in length. It has a furnace coil, an exterior device to heat the water, or a combination of the two.

Range Boiler and Furnace Coil

5-2. In the range boiler and furnace-coil arrangement shown in *Figure 5-1, page 5-2*, the range boiler is usually mounted upright on a stand. A drain is placed at the bottom to remove sediment, and a temperature- and pressure-relief valve is placed at the top for safety. The furnace coil is located in the furnace firebox, which supplies heat to the building. This type of installation is of value only when the furnace is heating the building; it is impractical in the summer months.

Range Boiler and Heater

5-3. In the range boiler and heater installation *(Figure 5-2, page 5-2)*, the boiler is usually installed horizontally on a stand. The heater may be fired by coal, gas, or oil.

GAS WATER HEATERS

Side-Arm Gas Heater

5-4. The side-arm gas water heater *(Figure 5-3, page 5-3)* (usually in older installations) is used mostly during the summer months to support furnace-oil water heaters.

Gas Water Heater

5-5. The gas water heater *(Figure 5-4, page 5-3)* is a galvanized-iron, copper, or porcelain-lined (gas-lined) steel tank enclosed in an insulating jacket. A gas burner provides the heat. The thermostat controls the temperature of the

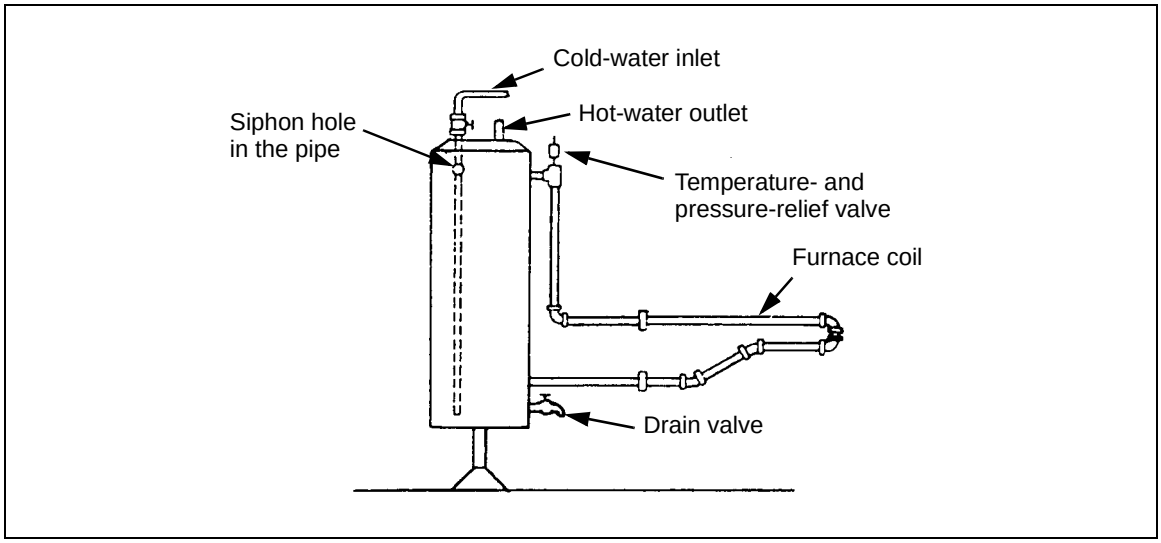

Figure 5-1. Range Boiler and Furnace Coil

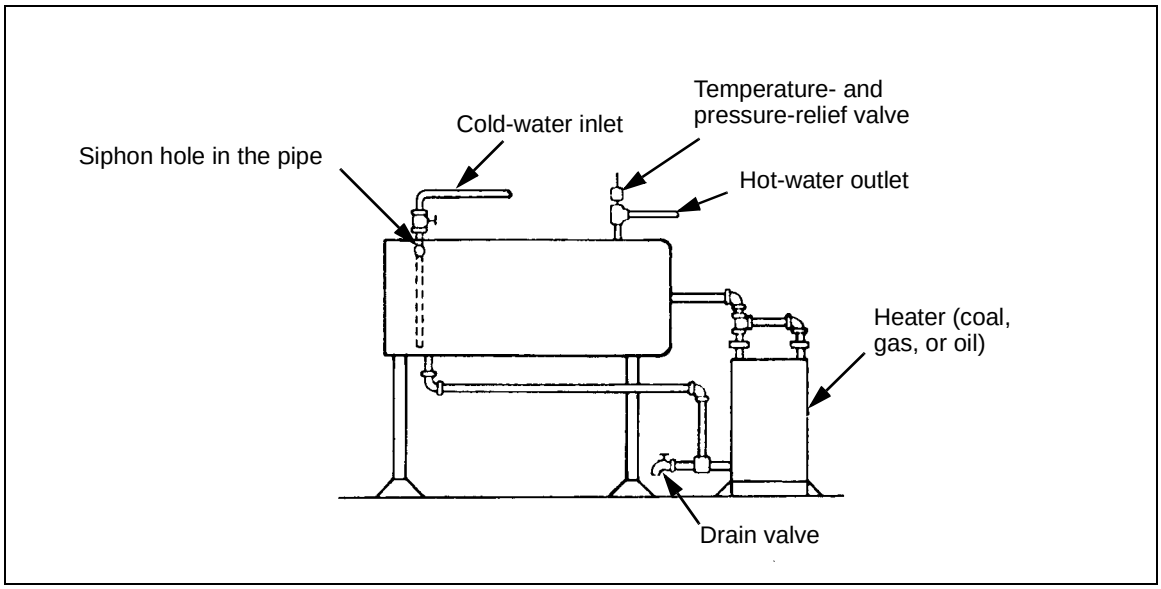

Figure 5-2. Range Boiler and Heater

water in the insulated tank. Its operation is automatic and will keep water at any temperature from 110 degrees to 165 degrees Fahrenheit, according to the setting on the thermostat. When gas is available, the gas water heater provides an efficient and inexpensive way to supply hot water at all times.

OIL-FIRED WATER HEATER

5-6. The oil-fired water heater is similar to the gas water heater, except that a vaporizing or pressure oil burner supplies the heat.

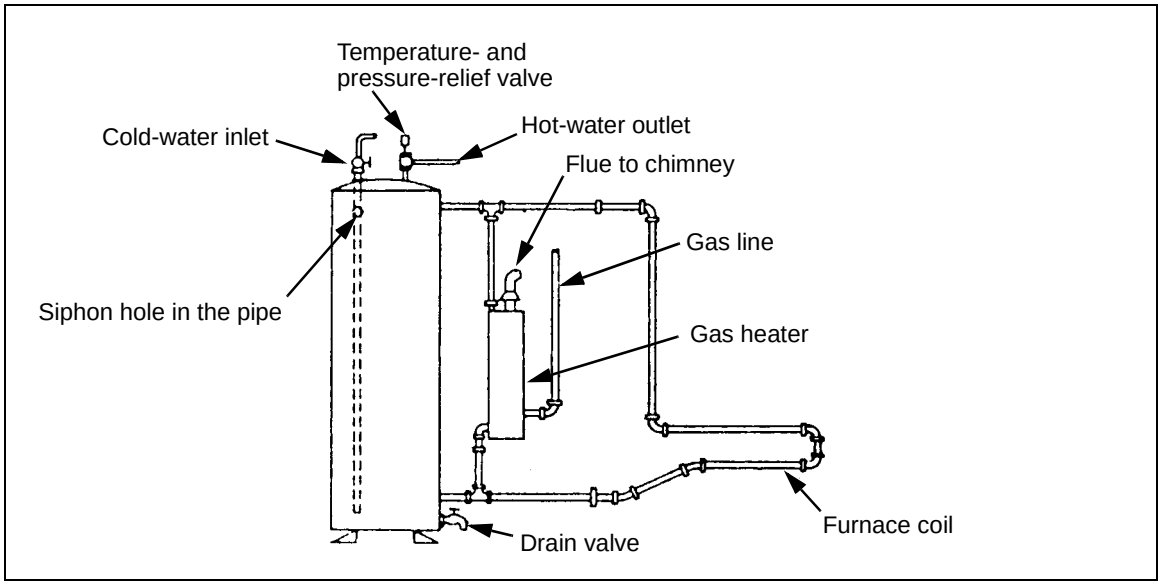

Figure 5-3. Side-Arm Gas Heater

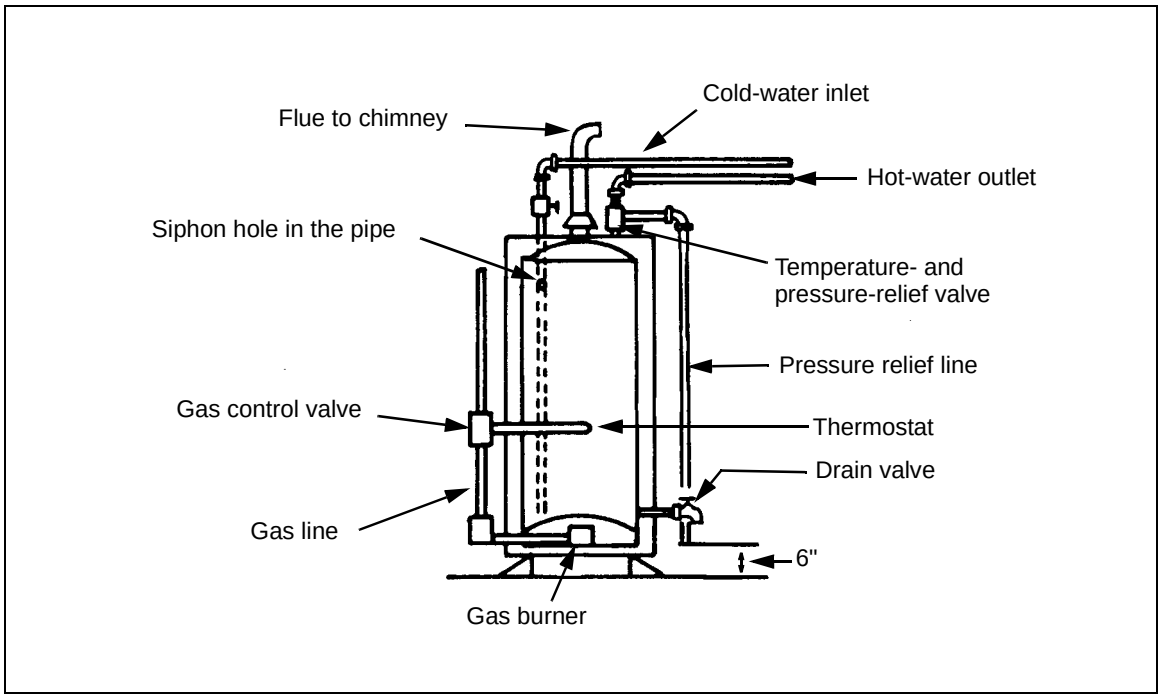

Figure 5-4. Gas Water Heater

ELECTRIC WATER HEATER

5-7. The electric water heater *(Figure 5-5, page 5-4)* normally has two immersion-type heating elements. The upper heater usually has higher wattage than the lower. Thermostats control these elements to ensure that the operation is automatic. The heater does not need a flue or smoke pipe,

since there are no burning products. The electric water heater may be located away from the chimney, in a closet, for example.

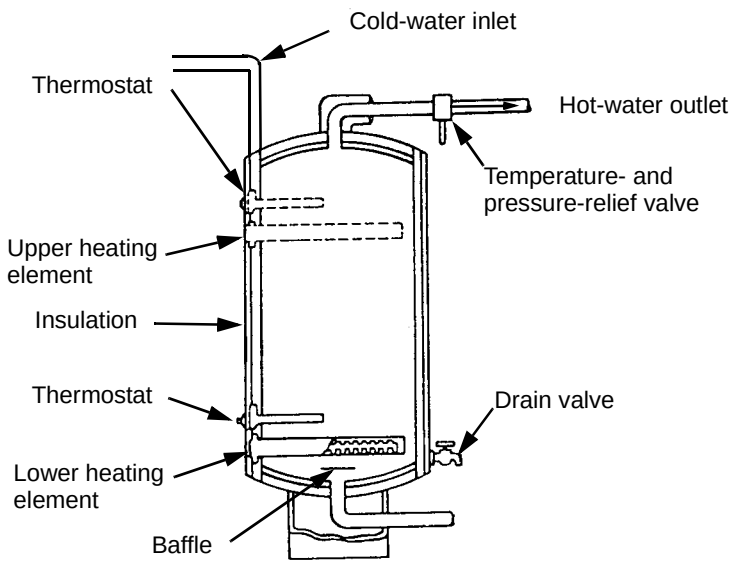

Figure 5-5. Electric Water Heater

FIELD WATER-HEATING DEVICES

5-8. Under field conditions, water-heating devices are desirable to maintain the health, cleanliness, and morale of the troops. In some climates, heat from the sun will take the chill from shower water. (Painting water containers black can absorb more heat from the sun.) When a device is needed to heat water, it can be assembled by using available materials. Two devices for mess-kit washing and showers are the vapor burner and the oil-water flash burner, which is assembled from a kit.

Vapor Burner

5-9. Fuels such as diesel oil, kerosene, gasoline, or a combination are used. In cold climates, gasoline may be added to thin the oil before use. To construct the burner, several sections of pipe, a valve, pipefittings, and a fuel reservoir are needed. The burner operates by preheating the fuel to form a vapor before burning. *Figure 5-6* shows a vapor burner for a mess-kit washing setup, as described in the following procedures:

Step 1. Assemble the pipe so that it doubles under itself. The best pipe size to use is 1/2- or 1/4-inch.

Step 2. Drill small holes (1/16 inch or less) in the top of the lower pipe, where the water containers will be placed.

Step 3. Cap the end of the pipe so that fuel can only escape from the drilled holes.

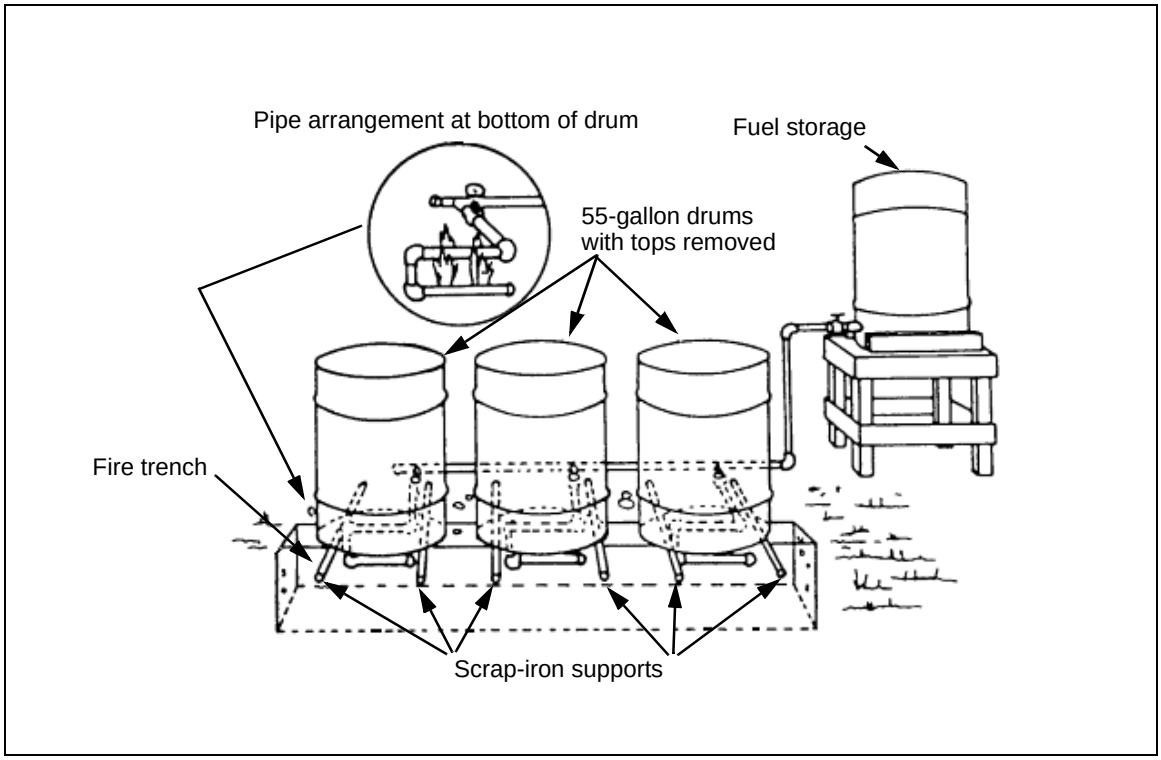

Figure 5-6. Vapor Burner

Step 4. Burn the fuel from the lower pipe to heat the fuel in the upper pipe, causing the fuel to vaporize. The vapor causes pressure in the lower pipe and forces the fuel out through the holes as a spray, making a better flame.

Step 5. Place the pipes in a fire trench for more efficient operation. The trench should be about 1 foot wide and 15 inches deep.

Step 6. Coil iron wire around the lower pipe near the holes and around the upper pipe just above the holes to serve as an automatic relighting device. The wires become red hot after the burner has been operating for a few minutes. If the flame goes out, the heat from the wires relights the fuel, preventing an explosion from gas collected in the trench.

Step 7. Before lighting the burner, open the control valve to allow a small amount of fuel to run through the lower pipe.

Step 8. Ignite the fuel by heating the upper pipe and starting the fuel-heat-gas pressure cycle.

Oil-Water Flash Burner

5-10. This burner can be assembled and installed from a kit, following manufacturer's instructions. A properly operated burner produces a blue flame. If the blue flame blows itself out, insufficient fuel is getting through the holes. Open the valve slightly or enlarge the holes to correct this situation. A yellow flame indicates incomplete burning caused by too much fuel escaping from the holes. Close the valve slightly or decrease the size of the holes to correct this condition.

SIZES

5-11. The maximum load and the working load determine the amount of hot water needed per hour. A heater with a storage capacity and recovery rate supplying that amount should be installed.

MAXIMUM LOAD

5-12. The maximum load of a water heater is the maximum amount of water used daily per person per hour. (The amount of daily water used is spread over several hours.) The amount of water varies with the style of living and the type of building. To determine the size of hot-water heater needed for a building, consider the maximum hourly use and the number of users. Generally, the maximum hourly use of hot water per person would be—

- Schools – 2 or 3 gallons
- Offices – 4 or 5 gallons
- Living quarters and barracks – 8 to 10 gallons

WORKING LOAD

5-13. The working load of a water heater is the percentage of maximum load expected under normal conditions in any given hour. Approximate working loads are—

- School or office buildings – 25 percent
- Residential buildings – 35 percent
- Barracks buildings – 40 percent

5-14. For example, the capacity of a water heater for a barracks that houses 50 soldiers can be determined as follows:

Step 1. 50 users x 8 gallons per hour (GPH) each = 400 gallons

Step 2. 400 gallons x 40 percent working load = 160 gallons

5-15. A heater with a 100-gallon storage capacity and a 60-GPH recovery rate (100 degrees Fahrenheit rise) could be installed.

OPERATION HAZARDS

5-16. Operation hazards and methods of reducing them are as follows:

- *Carbon monoxide poisoning.* Carbon monoxide is a colorless, odorless gas given off when burning is incomplete. The hazard may be removed by proper operation and adequate ventilation.
- *Lead poisoning.* Lead poisoning results from using leaded fuel such as ethyl gasoline. Breathing the vapors is very dangerous. Adequate ventilation is absolutely necessary.
- *Explosion.* A serious explosion can occur when a burner is not built or operated properly. If the flame of a burner goes out and the fuel is not turned off or relighted immediately, gas may build up. An explosion can result if the gas is ignited. The vapor burner is more dangerous than the oil-water flash burner, but the vapor burner's automatic relighting device reduces the chance of an explosion.

Chapter 6

Pipes and Fittings

Pipes and fittings for plumbing systems are classified into four basic groups: (1) cast-iron soil pipe and fittings, (2) galvanized-steel/iron pipe and fittings, (3) copper tubing and fittings, and (4) plastic pipe. Other pipes are also covered in this chapter.

PIPE SELECTION

6-1. *Table 6-1* gives the characteristics and uses of pipes and fittings in a plumbing system. *Appendix D* covers pipe capacities and the allowance for friction loss in pipes.

Table 6-1. Pipe Characteristics and Uses

			System	
Type of Pipe	**Rigid**	**Flexible**	**Water**	**Waste**
Cast-iron soil pipe:				
Hub and spigot	*			*
Double hub	*			*
Hubless	*			*
Galvanized-steel/ iron pipe	*		*	*
Copper tubing:				
K[1]	*		*	
L[2]	*	*	*	
M[3]	*	*	*	
DMV	*			*
Plastic pipe:				
PB		*		
PE		*	*	
PVC	*	*	*	*
CPVC[4]	*		*	
ABS	*			*

[1]Thick wall
[2]Medium wall
[3]Thin wall
[4]CPVC is used for cold- and hot-water systems.

PIPE ASSEMBLY MATERIALS

JOINT MATERIALS

6-2. All joints must be watertight and gastight. To do this, a specific material is used with each kind of pipe. Refer to the paragraphs below and the definitions in the glossary of this manual for additional information on joint materials.

Oakum

6-3. Oakum is hemp or jute fibers soaked with a bituminous compound. It is loosely twisted or spun into a rope or yarn. It is used with lead or other materials to make caulked joints in hub-and-spigot cast-iron pipe and in vitrified-clay tile or concrete pipe.

Lead

6-4. Lead is melted and poured into the joint. Alternatively, lead wood or shredded lead, packed cold, may be used on top of the oakum in caulked joints.

Pipe-Joint Compound

6-5. Thread and pipe joints are made by using one of several compounds, referred to as *dope*, for protecting the threads and for easy maintenance.

Solder

6-6. Solder is used with solder fittings to join copper tubing and brass and copper pipe. A nonacid flux (a substance, such as rosin, applied to promote union of materials) must be used. A 95 percent tin and 5 percent aluminum compound or substance is used for copper tubing.

Solvent Cement

6-7. Solvent cement is used with plastic fittings to join rigid plastic pipe. This cement comes in several types for each different plastic pipe and fitting.

Bitumen

6-8. Bituminous compounds, such as asphalt and tar pitch, are used to make joints in vitrified-clay tile and concrete pipe.

Gaskets

6-9. Flange joints need gaskets of rubber, cork, composition, sheet metal, or other material.

OTHER MATERIALS

6-10. In addition to the following, some materials are discussed under the different types of pipes in this chapter.

Sheet Metal, Aluminum, Lead Copper, and Galvanized-Iron

6-11. These materials are used for flashing around stacks and for shower pans.

Pipe Hangers

6-12. Many types of hangers for supporting pipe are available *(Figure 6-l).* Among the most common are the perforated iron strap furnished in rolls and cut to length, U-shaped wire hangers, and iron-ring hangers.

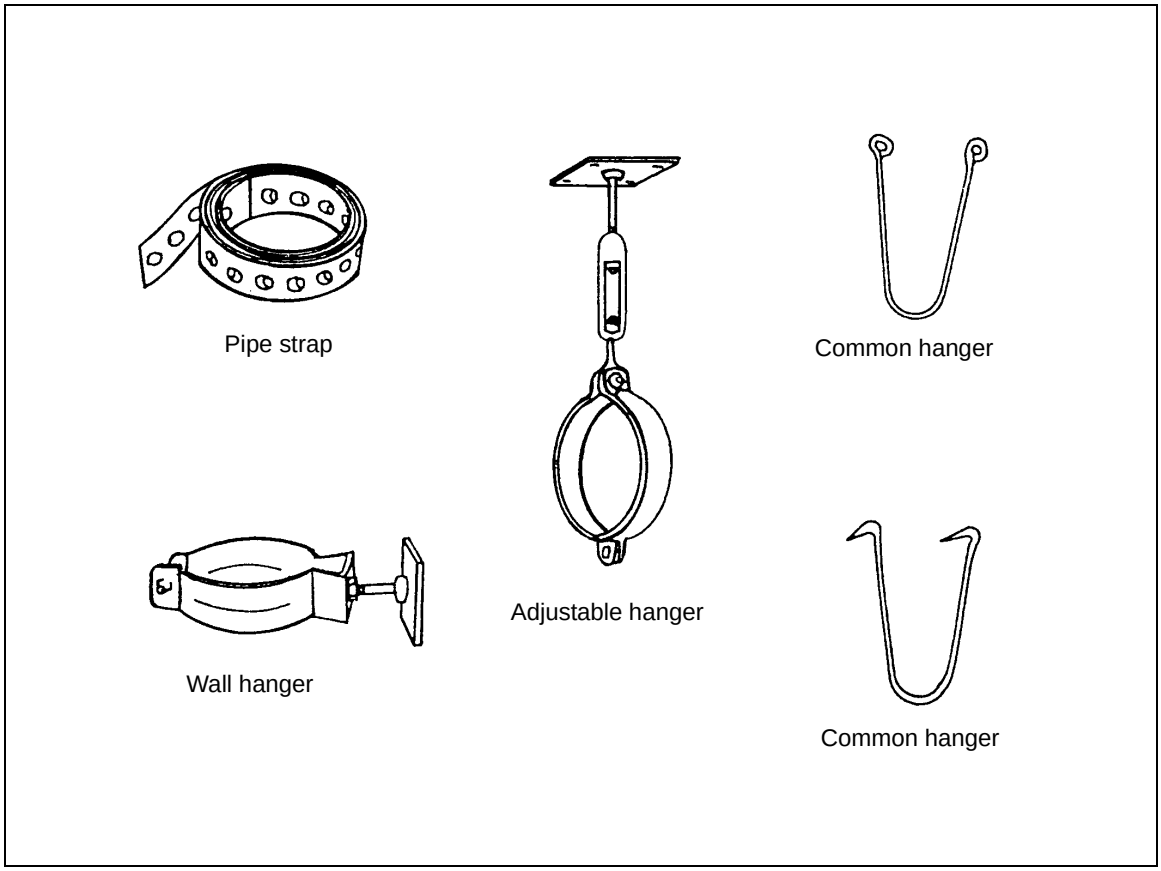

Figure 6-1. Pipe Hangers

Oil

6-13. Cutting oil or lard oil is used as a lubricant when cutting threads on pipe.

Insulation

6-14. See *Chapter 12* for pipe insulation.

PIPE MEASUREMENTS

6-15. Fittings are part of a pipe-run length. The total length measurement must include the distance (engagement) a pipe goes into a fitting and the fitting's dimensions. This section describes determinations and definitions of pipe runs and plumbing measurements.

DEFINITIONS

Pipe Engagement

6-16. A pipe engagement is the distance the pipe goes into a fitting. This distance is determined by the pipes nominal size diameter *(Figure 6-2)*.

Type of Fitting Material	Nominal Size Diameter (in Inches)	Approximate Pipe Engagement (in Inches)
Steel, threaded (pipe-joint compound) 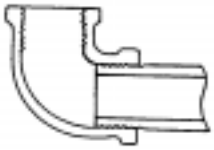	1/8 1/4 3/8 1/2 3/4 1 1 1/4 1 1/2 2 3	1/4 3/8 3/8 1/2 9/16 11/16 11/16 11/16 3/4 1
Copper (solder) 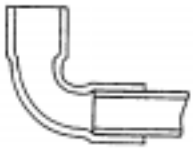	1/4 3/8 1/2 3/4 1 1 1/4 1 1/2	5/16 3/8 1/2 3/4 15/16 1 1/18
Plastic (solvent cement) 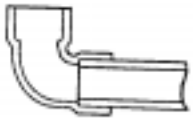	1/2 3/4 1 1 1/4 1 1/2 2 3 4	1/2 5/8 3/4 11/16 11/16 3/4 1 1/2 1 3/4
Cast-iron (oakum and lead) 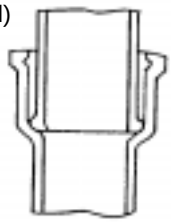	2 3 4 5 6	2 1/2 2 3/4 3 3 3

Figure 6-2. Pipe Engagement in Fittings

Fitting Dimension

6-17. A fitting's dimension is the measurement from the center of a fitting to the end of the fitting, as shown in *Figure 6-3*. Use this dimension when the fitting is part of the pipe-run length.

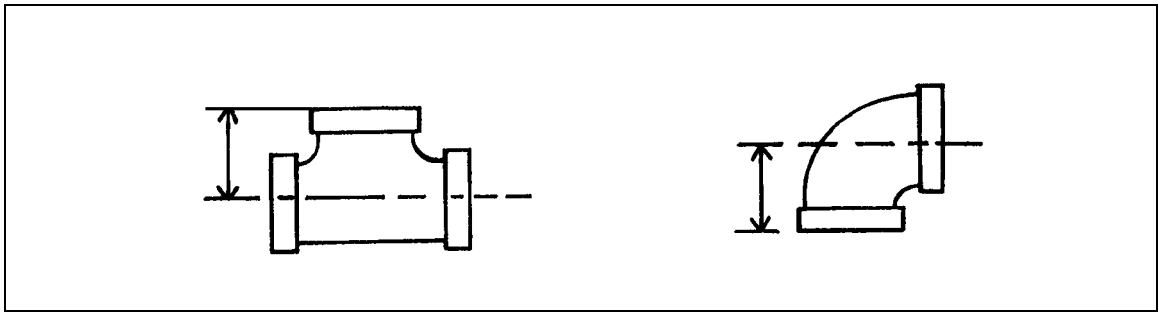

Figure 6-3. Fitting Dimension

TYPES OF MEASUREMENTS

6-18. Of the several methods of measuring pipe lengths, the ones most commonly used are the face-to-face and the center-to-center methods, as shown in *Figure 6-4*.

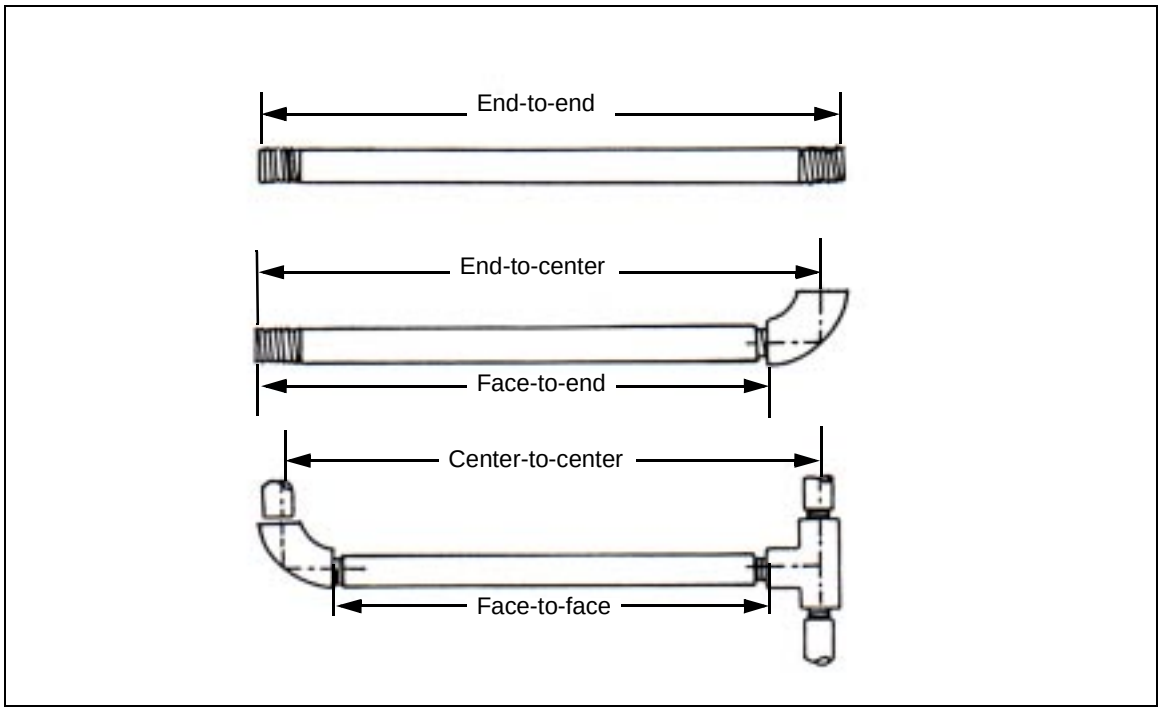

Figure 6-4. Types of Measurements

Face-to-Face

6-19. A face-to-face measure is the distance between the faces of each fitting. To determine the pipe length needed, add the pipe engagement distance for each fitting to the face-to-face measurement.

Center-to-Center

6-20. A center-to-center measure is used when pipe fittings are on each end. To determine the pipe length needed, subtract the sum of both fitting dimensions and then add the sum of both pipe engagements.

End-to-End

6-21. End-to-end measure is the full length of pipe, including both threads.

Offset

6-22. An offset measurement is used to install a pipeline run around an obstacle (*Figure 6-5*). The following steps explain how to run an offset using 3-inch steel-threaded pipe; 45-degree elbows with a fitting dimension of 4 5/8 inches; and a 1-inch threaded-pipe engagement:

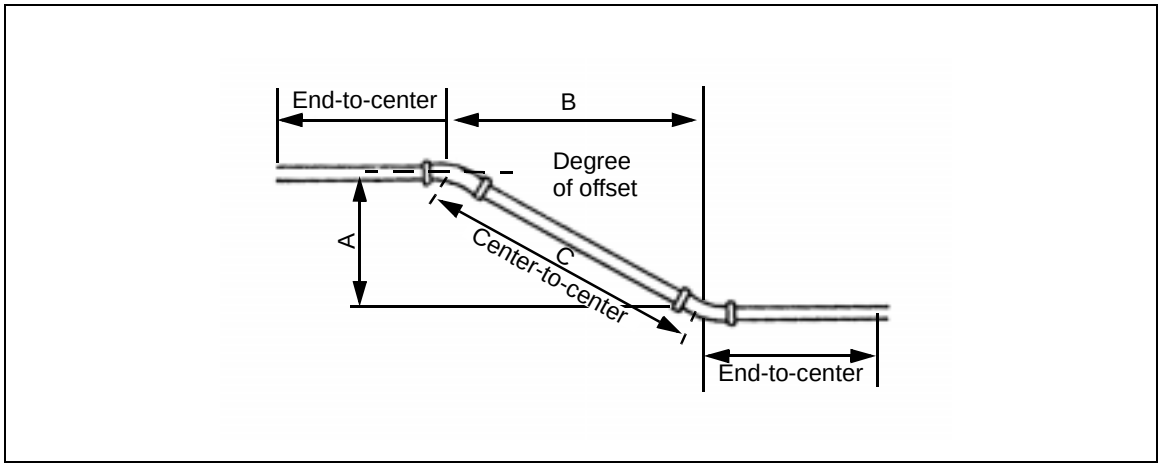

Figure 6-5. Offset Measurement

Step 1. Determine the vertical distance "A" from the center of the pipe to center of the pipe. In this example, the distance is 40 inches.

Step 2. Refer to *Table 6-2* for the 45-degree offset constant, which is 1.4142.

Step 3. Multiply 1.4142 inches by 40.

1.4142 by 40 = 56.5680 = 56.57 = 56 9/16 inches of pipe

Step 4. Since two elbows are needed, subtract the sum of both elbow-fitting dimensions from 56 9/16 inches. A 3-inch, 45-degree elbow-fitting dimension is 4 5/8 inches.

4 5/8 + 4 5/8 = 8 10/8 = 9 2/8 = 9 1/4 (*or* 9 4/16)

56 9/16 – 9 4/16 = 47 5/16

Step 5. Add the sum of the 1-inch pipe engagement for each fitting to 47 5/16 inches.

47 5/16 + 2 = Total pipe length needed for "C"

Table 6-2. Offset Degree Constants

Degree of Offset	When A=1, B=	When B=1, A=	When A=1, C=
60	0.5773	1.7320	1.1547
45	1.0000	1.0000	1.4142
30	1.7320	0.5773	2.0000
22 1/2	2.4140	0.4142	2.6131
11 1/4	5.0270	0.1989	5.1258
5 3/8	10.1680	0.0983	10.2170

CAST-IRON SOIL PIPE AND FITTINGS

6-23. Cast iron is available in two different wall thicknesses or weights, service weight (SW) and extra-heavy weight (XH).

USE

6-24. Cast-iron soil pipe is used for sewers, drains, stacks, and vents in a waste system. SW is used in households and is adequate for most military construction; XH is used where liquids may corrode the pipe or where greater strength is needed for tall stacks or under roadways.

TYPES AND SIZES

6-25. This pipe is manufactured in three different types *(Figure 6-6, page 6-8)*:

Hub and Spigot

6-26. Hub-and-spigot pipe comes in 5-foot lengths ranging in diameter from 2 to 15 inches.

Double Hub

6-27. Double-hub pipe comes in lengths ranging in diameter from 2 to 15 inches.

Hubless

6-28. Hubless pipe comes in 10-foot lengths ranging in diameter from 1 1/2 to 8 inches.

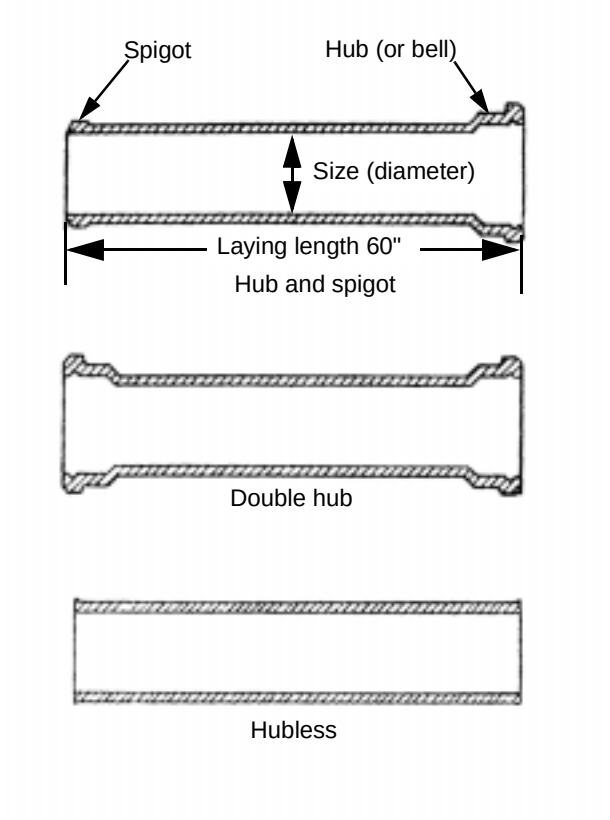

Figure 6-6. Cast-Iron Pipes

HANDLING AND STORAGE

6-29. Cast-iron pipe is heavy and brittle; therefore, it must be stored and handled with care to prevent cracks or breakage.

FITTINGS

6-30. The major types of fittings used for cast-iron pipe are Ts, Y-branches, bends, and traps. (Less commonly used fittings are listed in *paragraph 6-36, page 6-11*.) These fittings are used for connecting hub-and-spigot or hubless cast-iron pipes.

Ts

6-31. *Sanitary Ts* are designed to carry drainage and *straight Ts* are used for vent lines *(Figure 6-7)*. Use a tapped T, either sanitary or straight, to connect threaded-pipe branch drains or vent lines. Use a test T for testing a newly installed waste system for leaks. A Ts size is always given first by the through section (run) and then by the takeoff (outlet).

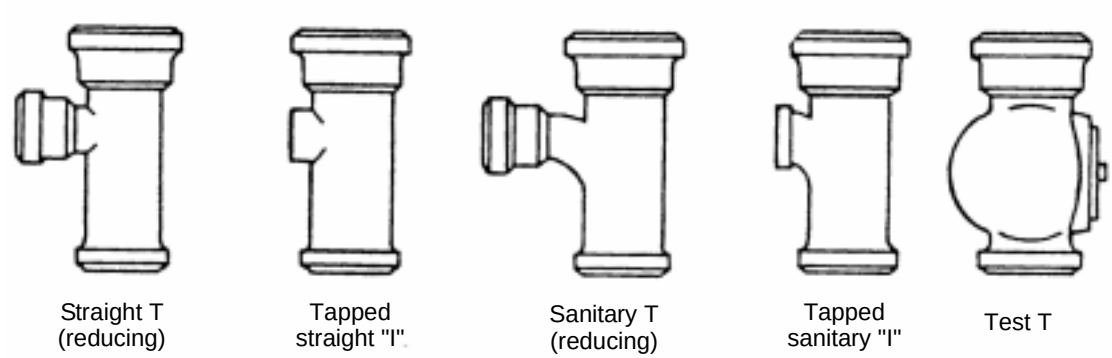

Figure 6-7. Cast-Iron Ts

Y-Branches

6-32. Y-branches are used to join one or more sanitary sewer branches or to connect a branch to a main line. This design allows a smoother change in flow direction. The most common Y-branches are the 45- and 90-degree types *(Figure 6-8)*.

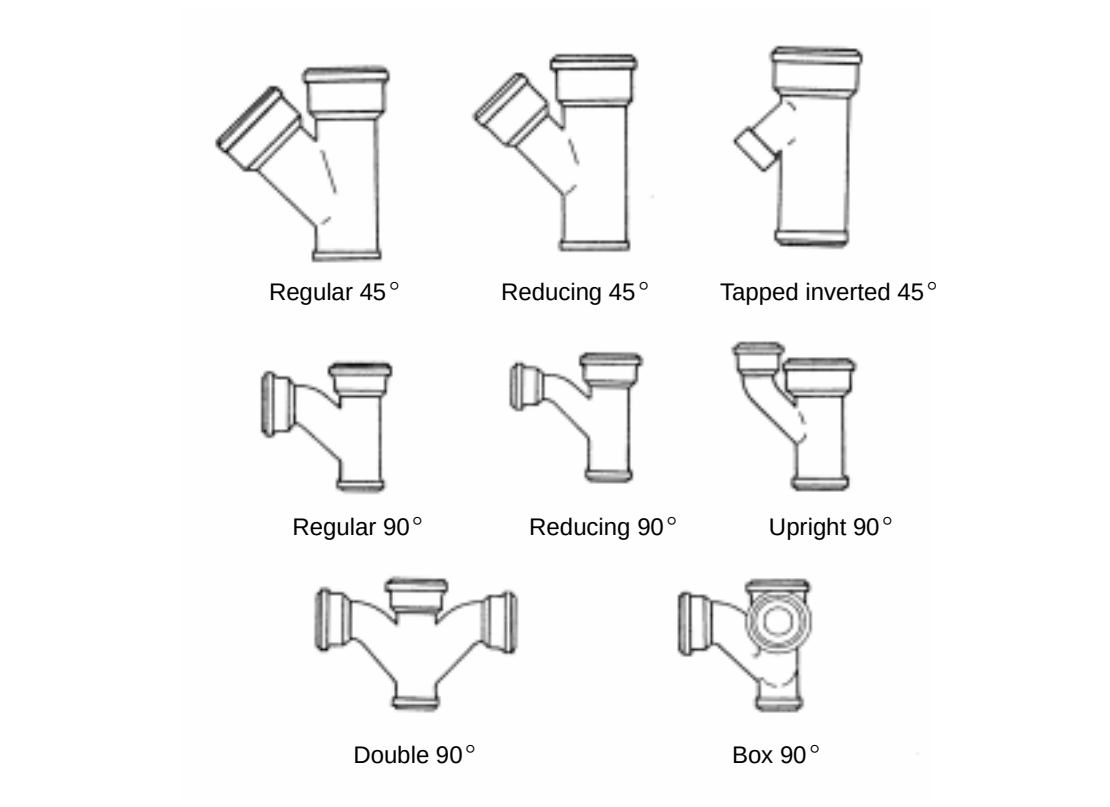

Figure 6-8. Cast-Iron 45- and 90-Degree Y-Branches

- **45-Degree**. A 45-degree Y-branch has a side takeoff entering the through section at a 75-degree angle. The side takeoff may be the same diameter or a smaller diameter. If the takeoff is smaller, it is a reducing Y-branch. Other types of 45-degree branches are inverted, tapped, and tapped inverted.
- **90-Degree**. The 90-degree Y-branch, also called a combination Y and 1/8 bend or T-Y, is made in several shapes. The double 90-degree Y-branch is used extensively in a unit vent installation. The box 90-degree Y-branch with a side takeoff on each side is used to install a stack in a room corner. The 90-degree Y-branches also have tapped side takeoffs.

Bends

6-33. Bends are used to change the direction of a cast-iron pipeline. The degree of direction change is given as a common math fraction. Bends are designated in fractions of 1/16, 1/8, 1/6, 1/5, 1/4, and 1/2 as they change the direction of 22 1/2, 45, 60, 72, 90, and 180 degrees, respectively. These bends can be regular, short sweep, or long sweep *(Figure 6-9)*.

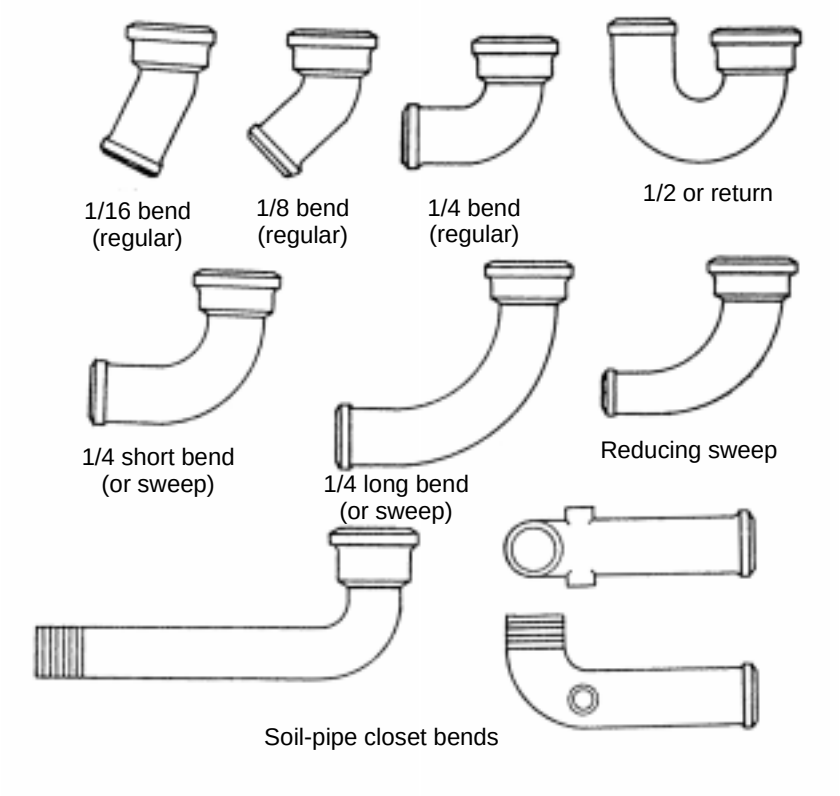

Figure 6-9. Cast-Iron Bends

Closet Bends

6-34. A closet bend is a special fitting to connect a soil waste branch line for a water closet (toilet). It can be plain or tapped for waste or venting. Closet bends are made to fit different types of floor flanges (rims for attachment). One type may have a spigot end for caulking, which is marked for cutting to a desired length. Another type has a hub end that connects to the floor flange with a sleeve as shown in *Figure 6-9*.

Traps

6-35. A trap provides a water seal, which keeps sewer gases from entering a building through a waste outlet. The most common type is a P-trap. The P-trap is used in a partition to connect a drain to a waste branch. A running trap is used in a building's drain line when the local plumbing codes require that the building drain be trapped. *Figure 6-10* shows four general types of cast-iron soil pipe traps. (See *Chapter 9* for further information on traps and trap seal loss.)

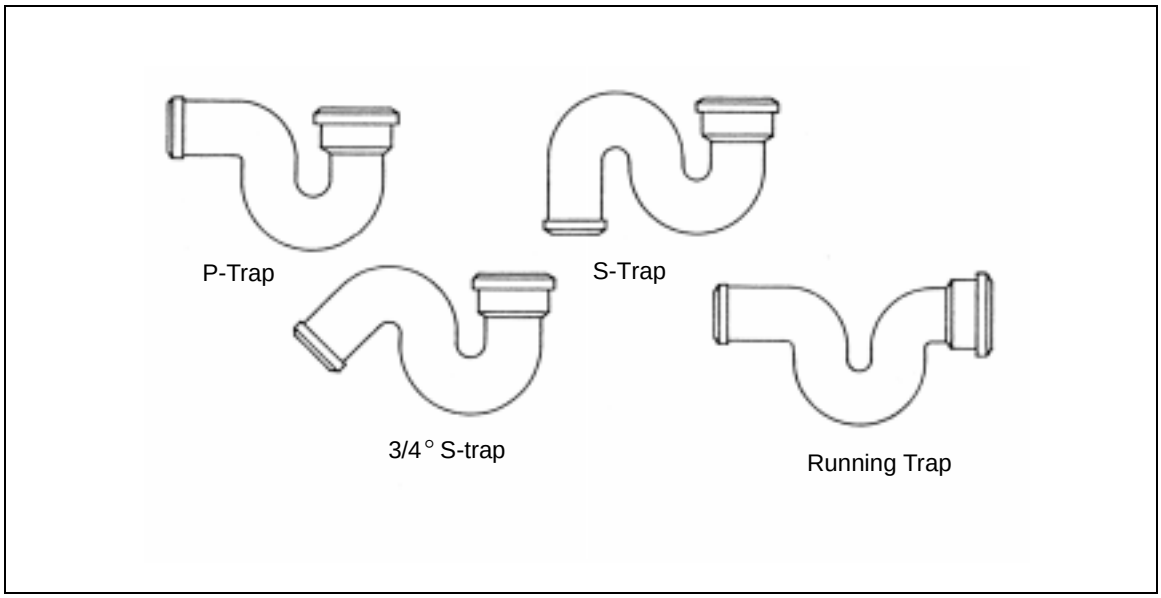

Figure 6-10. Cast-Iron Traps

Other Fittings

6-36. The following fittings (except the tucker coupling) may be used on all types of pipe.

- **Offset**. An offset *(Figure 6-11, page 6-12*) carries soil or waste line past an obstruction in a building. Offsets are either regular or 1/8-degree bend. The 1/8-degree bend gives smoother transition than the regular one.
- **Increaser**. An increaser *(Figure 6-11, page 6-12)* increases the diameter of a straight-through pipeline. It is usually used at the top of a stack.

- **Cleanout**. The cleanout *(Figure 6-11)* is a removable, threaded plug placed in drainage lines for cleaning or removing stoppages.
- **Tucker coupling**. The tucker-coupling fitting *(Figure 6-11)* connects a hub-and-spigot pipe section to a threaded pipe section. This fitting has a hub on one end and female threads at the other end.
- **Sewer thimble**. The sewer thimble *(Figure 6-11)* is a special fitting that connects the building sewer line to the main sewer line.

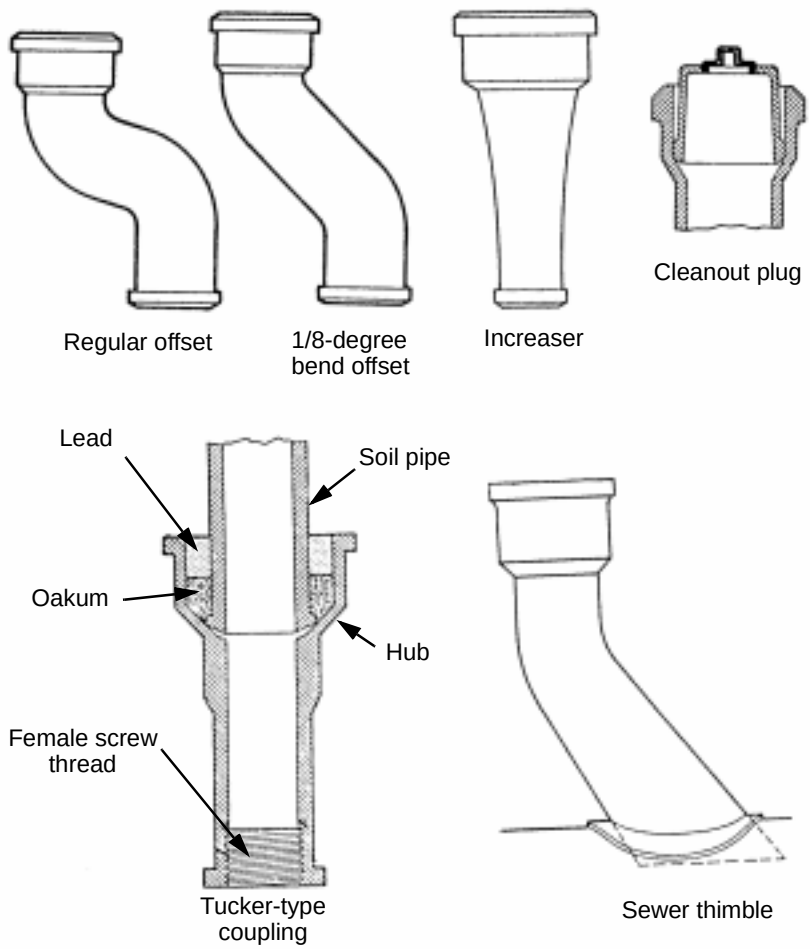

NOTE: All of these fittings except the tucker coupling can be used on all types of pipes.

Figure 6-11. Cast-Iron Fittings

MEASURING

6-37. Measure cast-iron soil pipe using one of the methods in *paragraph 6-18, page 6-5*.

CUTTING

6-38. Cast-iron soil pipe can be cut by scoring with a hammer and cold chisel or by cutting with a soil-pipe cutter *(Figure 6-12)*. Use the following steps:

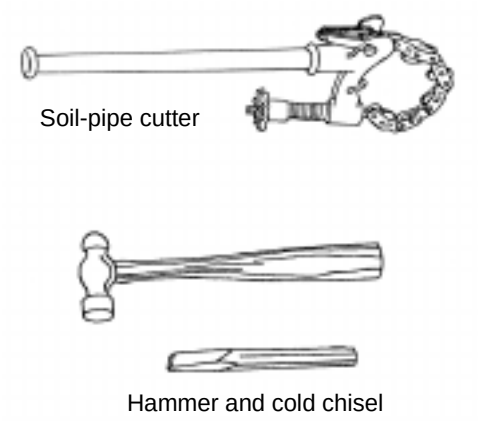

Figure 6-12. Cast-Iron Soil-Pipe Cutting Tools

Step 1. Make a chalk or crayon mark completely around the pipe where it will be cut.

Step 2. Cut the pipe with a soil-pipe cutter or by using a hammer and cold chisel.

- **Soil-pipe cutter**. Set the pipe in a vise and position the cutting wheels on the mark by turning the adjusting knob. Apply pressure on the handle until the pipe is cut. Use the adjusting knob to keep a good bite on the pipe *(Figure 6-13)*.

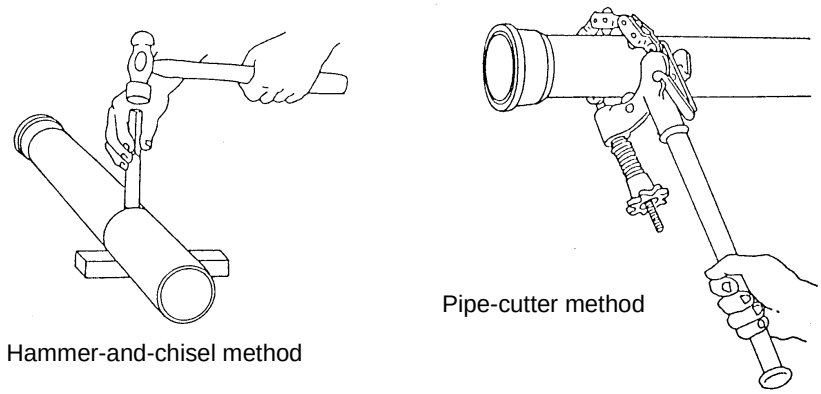

NOTE: The pipe-cutter method is preferred.

Figure 6-13. Cutting Cast-Iron Soil Pipe

- **Hammer and cold chisel**. Place the pipe on a board or mound of dirt at the point to be cut. Then place the chisel's cutting edge on the mark and hit it lightly with the hammer while rotating completely around the pipe. Continue scoring around the pipe using harder blows until the pipe is cut *(Figure 6-13, page 6-13)*.

JOINING

6-39. Determine the amount of oakum and lead for a lead joint by the pipe size being connected *(Table 6-3)*. Other types of joint materials—compression gaskets and neoprene sleeves with stainless steel clamps—are manufactured for different pipe sizes.

Table 6-3. Joint-Material Requirements

Pipe Size (Inches)	Oakum (Feet)	Lead (Pounds)
2	3	1 1/2
3	4 1/2	2 1/4
4	5	3
5	6 1/2	3 3/4
6	7 1/2	4 1/2

Hub-and-Spigot Joint

6-40. A hub-and-spigot pipe joint is made with oakum and lead and/or a rubber compression gasket. A lead joint can be either vertical or horizontal. *Figure 6-14* shows the tools and materials required. *Figure 6-15* shows one type of lead-melting furnace. Several types of melting furnaces are available. Follow the manufacturer's instructions and safety precautions.

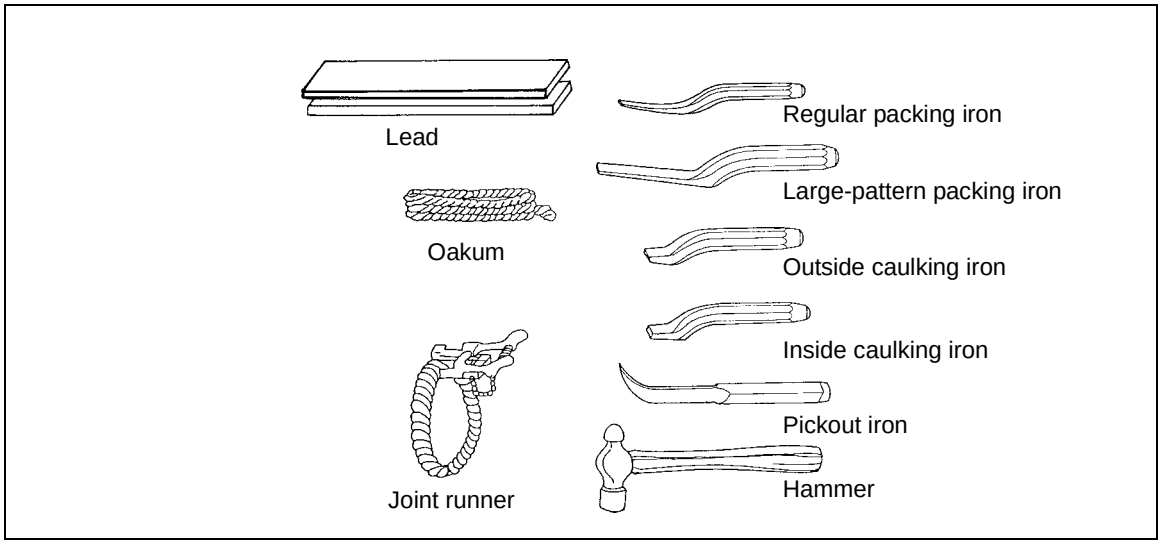

Figure 6-14. Tools and Materials for Lead Joints

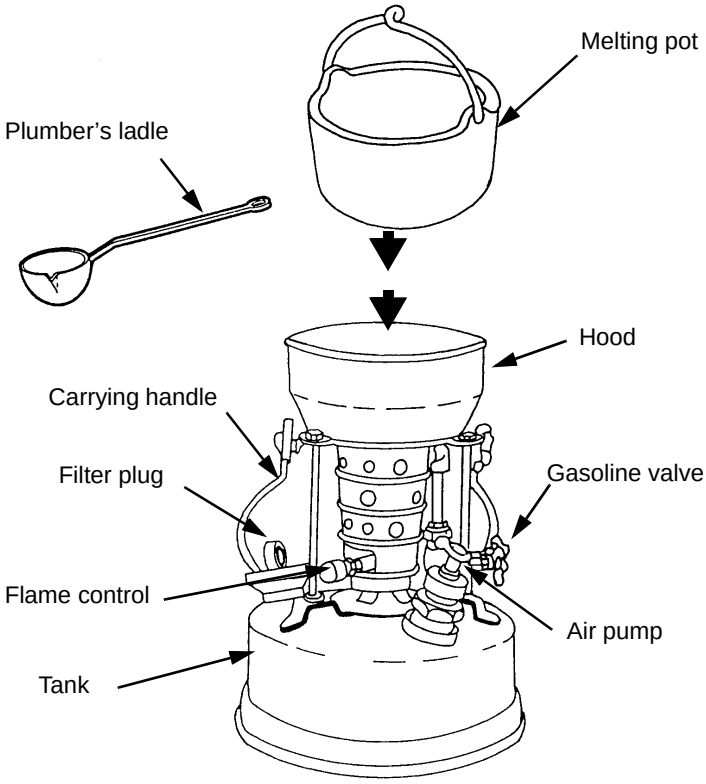

Figure 6-15. Lead-Melting Furnace

6-41. **Horizontal Lead Joint.** Use *Figure 6-16, page 6-16,* and the following steps to make a joint.

WARNING

Always wear protective clothing, protective gloves, a respirator, and goggles when working with molten lead. Severe personal injury and permanent disability may result from accidents.

Step 1. Clean the pipe end and/or the fitting end.

Step 2. Center the spigot or cut end in the hub of another pipe or fitting.

Step 3. Pack strands of oakum into the hub completely around the pipe or fitting with a packing iron to within 1 inch of the hub's end *(Figure 6-16).*

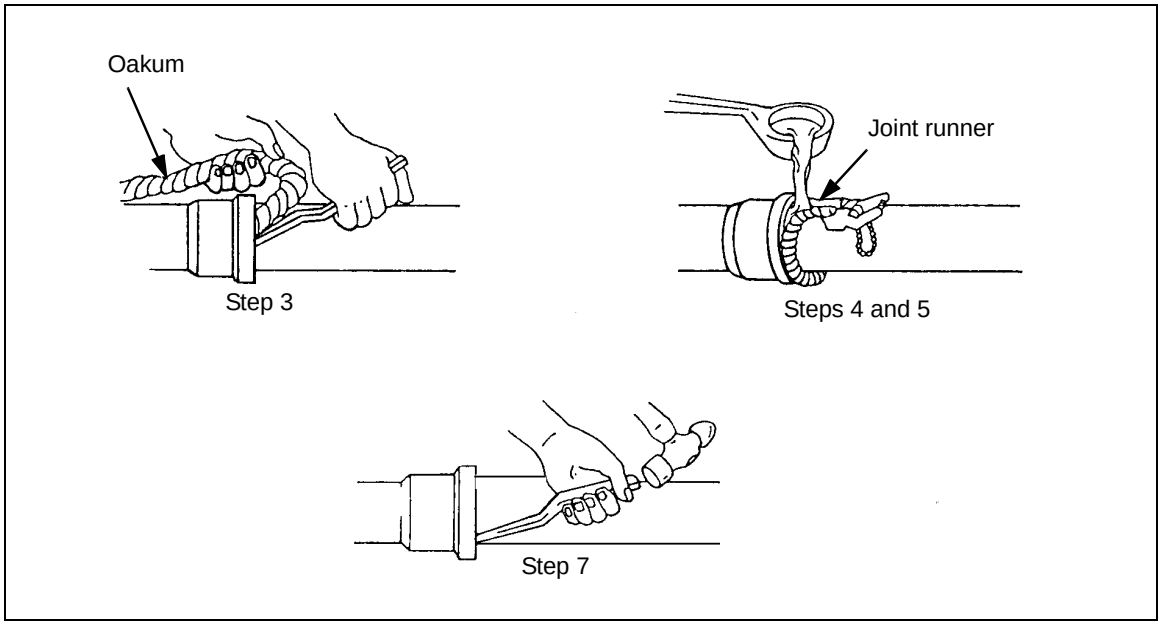

Figure 6-16. Horizontal Lead Joint

Step 4. Clamp the joint runner around the pipe or fitting *(Figure 6-16)*.

Step 5. Pour the molten lead into the hub in one pour, using a plumber's ladle.

Step 6. Remove the joint runner when the lead hardens.

Step 7. Caulk the lead *(Figure 6-16)*.

6-42. **Vertical Lead Joint**. Use *Figure 6-17* and the following steps to make a joint.

WARNING

Always wear protective clothing, protective gloves, a respirator, and goggles when working with molten lead. Severe personal injury and permanent disability may result from accidents.

Step 1. Wipe the hub and spigot or the cut end to remove moisture and foreign matter.

Step 2. Center the spigot or cut end in the hub of the pipe or fitting.

Step 3. Pack strands of oakum into the hub completely around the pipe or fitting with a packing iron to within 1 inch of the hub's end *(Figure 6-17)*.

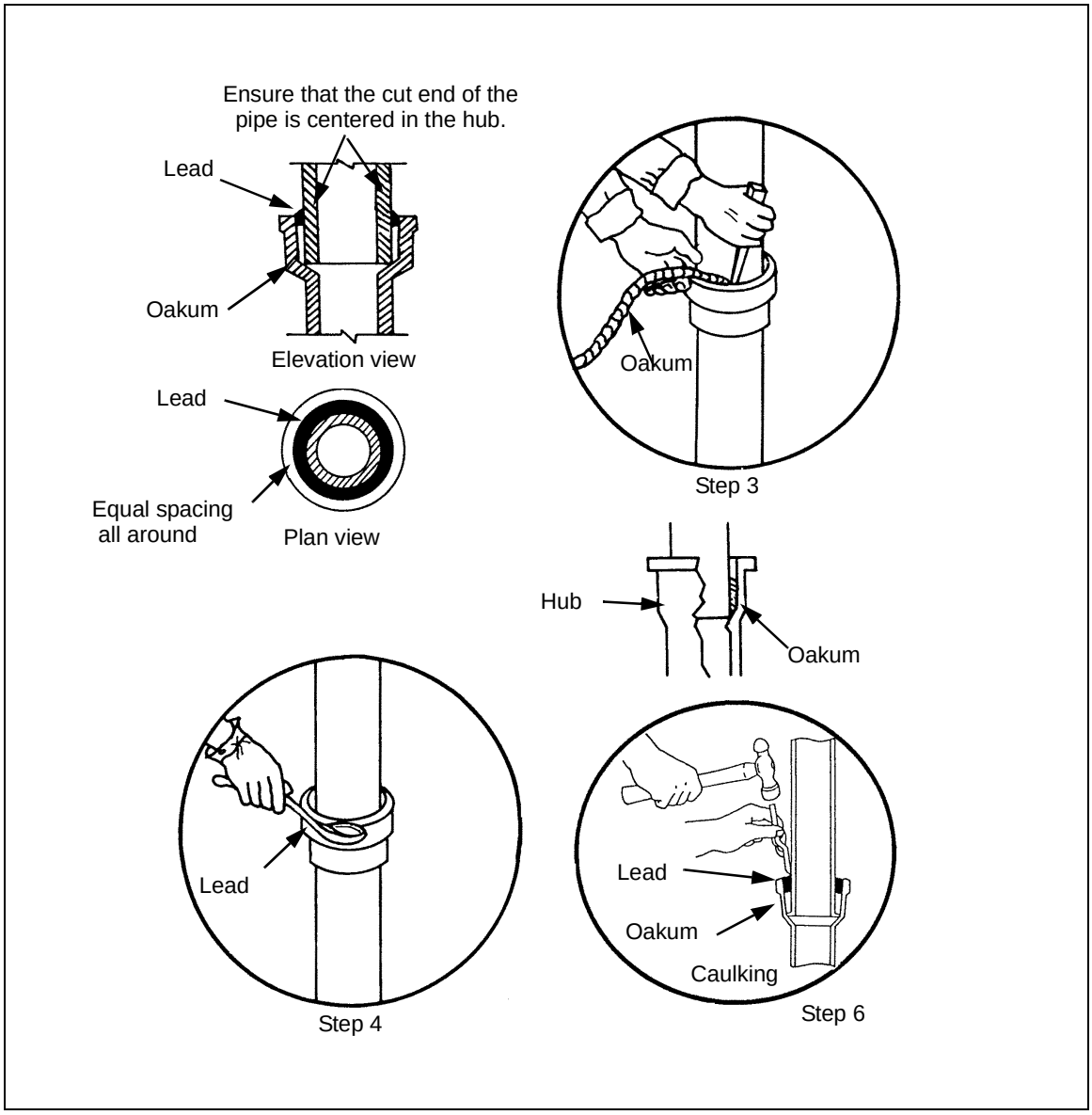

Figure 6-17. Vertical Lead Joint

Step 4. Pour hot molten lead carefully into the hub in one pour, using a plumber's ladle *(Figure 6-17)*.

WARNING

Always wear protective clothing, protective gloves, a respirator, and goggles when working with molten lead. Severe personal injury and permanent disability may result from accidents.

Step 5. Allow the lead to cool one minute or more to harden.

Step 6. Caulk the lead against the pipe with the inside caulking iron and then against the hub with the outside caulking iron, as shown in *Figure 6-17, page 6-18*. The joint is then complete and leakproof.

NOTE: If hot molten lead cannot be used, make a cold caulk joint using lead wool or shredded lead. Roll the lead wool or shredded lead into several strands about 1/2 inch in diameter and 1 to 2 feet long. Force the strands into the hub and caulk. For best results, arrange the ends of the strands alternately.

Hubless Joint

6-43. A hubless joint is made with a neoprene sleeve and a stainless steel clamp. To make a hubless joint use *Figure 6-18* and the following steps:

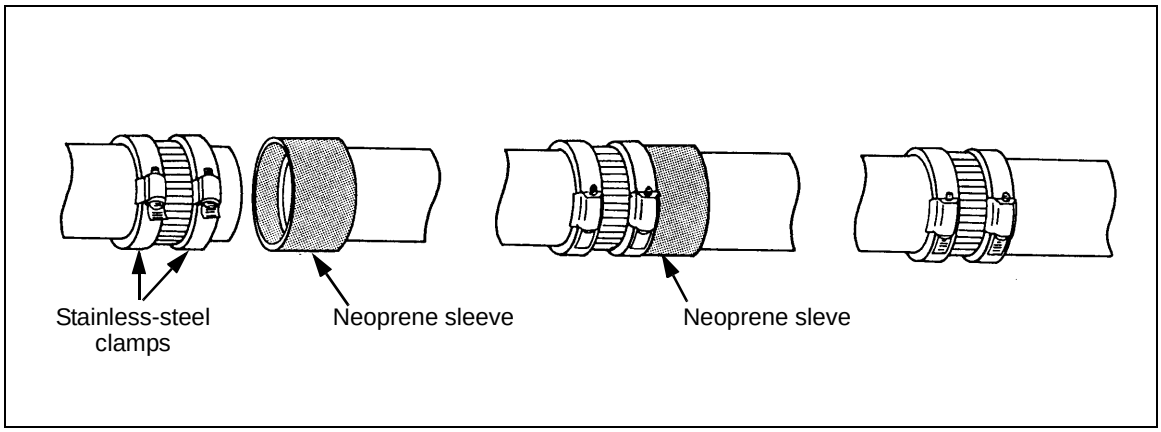

Figure 6-18. Hubless Joint

Step 1. Remove the neoprene sleeve from the stainless-steel clamp.

Step 2. Slide the sleeve on the end of one pipe or fitting until it is firmly against the collar inside the sleeve.

Step 3. Slide the clamp on the other pipe.

Step 4. Slide the pipe end into the sleeve until it is firmly against the collar inside the sleeve.

Step 5. Center the clamp over the sleeve and tighten with a screwdriver or wrench.

SUPPORTING PIPE JOINTS

6-44. To prevent strain on the joints, cast-iron pipe should be supported at various points along pipe runs and fittings. This pipe must be supported (vertically and horizontally) to maintain alignment and the proper drainage slope.

GALVANIZED-STEEL/IRON PIPE AND FITTINGS

USE

6-45. Galvanized-steel/iron pipe can be used for hot- and cold-water supply distribution, certain drainage applications, and vent installations.

TYPES AND SIZES

6-46. This pipe comes in three strengths: (1) standard, (2) extra strong, and (3) double extra strong. The definitions *Schedule 40* and *Schedule 80* also describe pipe strengths. Schedule 40 standard is most commonly used in plumbing. Pipe diameter sizes (nominal pipe sizes) are 1/8 inch to 12 inches, also referred to as iron-pipe size. The pipe comes in 21-foot lengths, threaded or unthreaded (*Figure 6-19*).

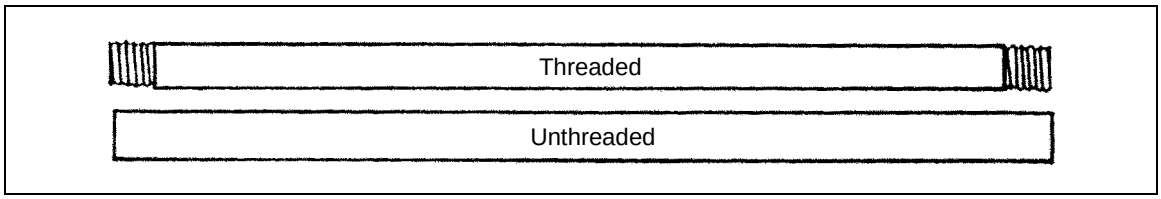

Figure 6-19. Galvanized-Steel/Iron Pipe

HANDLING AND STORAGE

6-47. Galvanized pipe should be stored in a dry place. If the pipe ends are threaded, they must be protected from damage.

FITTINGS

6-48. Fittings *(Figure 6-20)* for this pipe are classified as either ordinary (standard) or drainage (recessed).

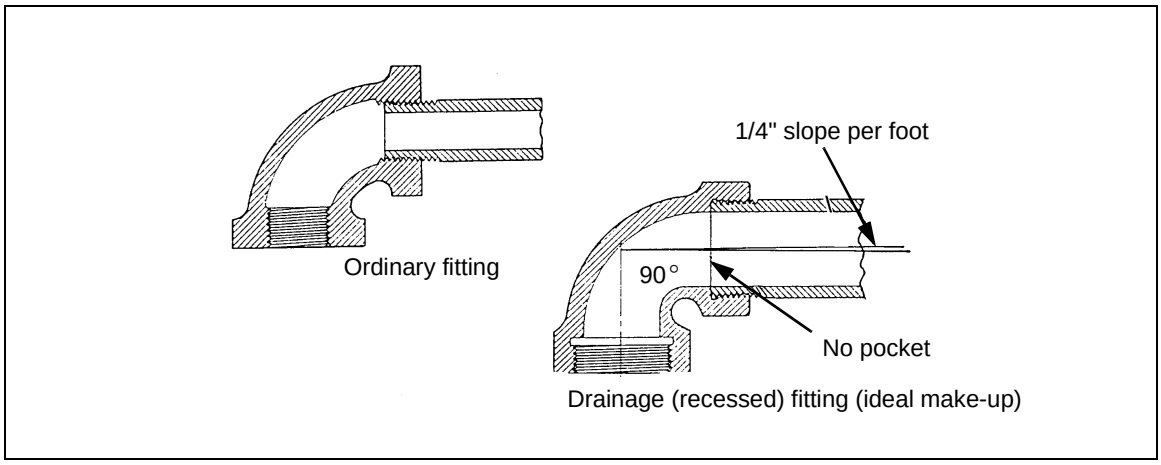

Figure 6-20. Ordinary and Drainage Pipe Fittings

- **Ordinary (standard)**. Ordinary fittings are used for water service and venting. They range in size from 3/8 inch to 6 inches.

- **Drainage (recessed)**. Drainage fittings are used in waste systems. They have threads at a slight angle so that horizontal drainage pipe will slope about 1/4 inch per foot *(Figure 6-20, page 6-19)*. They range in size from 1 1/4 to 12 inches.

Ts

6-49. Ts *(Figure 6-21)* are used when a pipe run branches at a 90-degree angle. T size is specified by the through section (run) and then the outlet.

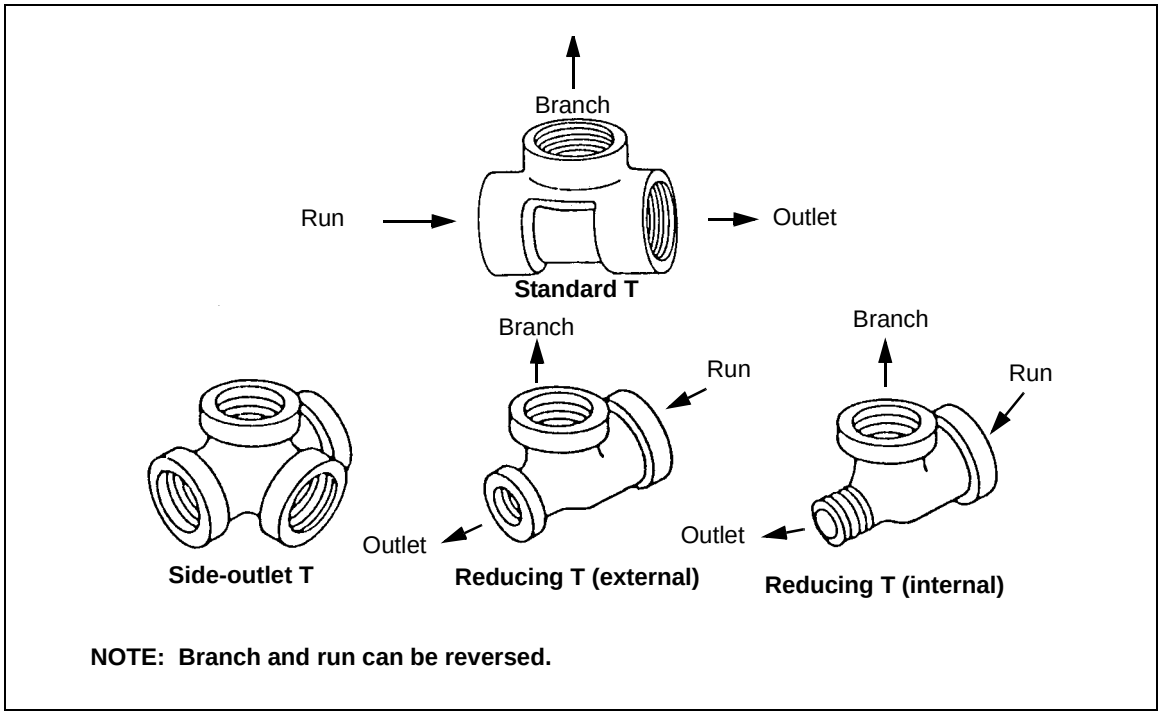

Figure 6-21. Ts

Elbows (Ls)

6-50. Elbows *(Figure 6-22)* are used to change the direction of a pipeline. They come in a variety of sizes and patterns. The most common elbow are 90- and 45-degree angle. Either type can be a standard or a reducing L. The size of an L is given first by the larger opening and then by the smaller opening.

Couplings

6-51. Couplings *(Figure 6-23)* are used to connect two lengths of pipe.

- **Standard coupling**. An ordinary coupling connects pipes of the same size.
- **Reducing coupling**. A reducing coupling connects pipes of different sizes.
- **Eccentric coupling**. An eccentric reducing coupling connects pipes of different sizes.

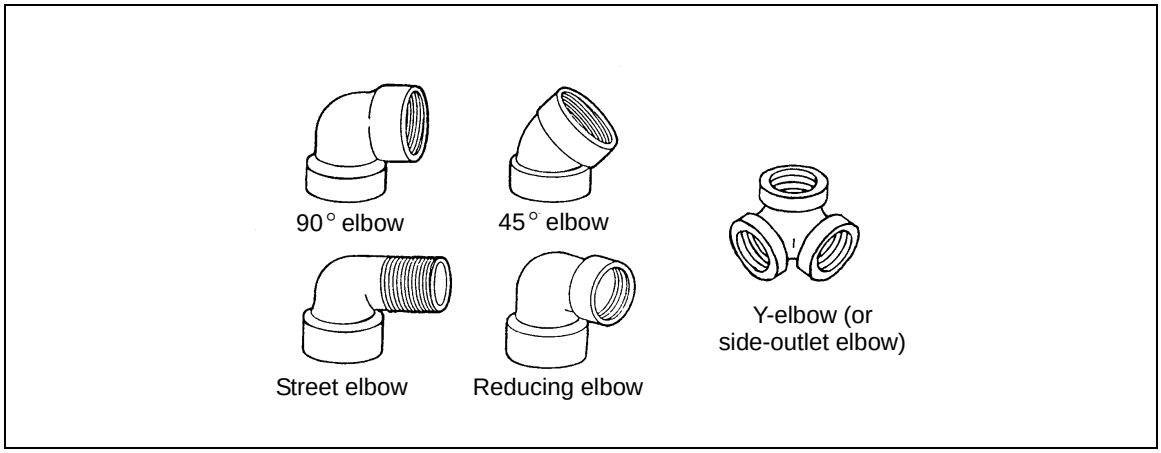

Figure 6-22. Elbows

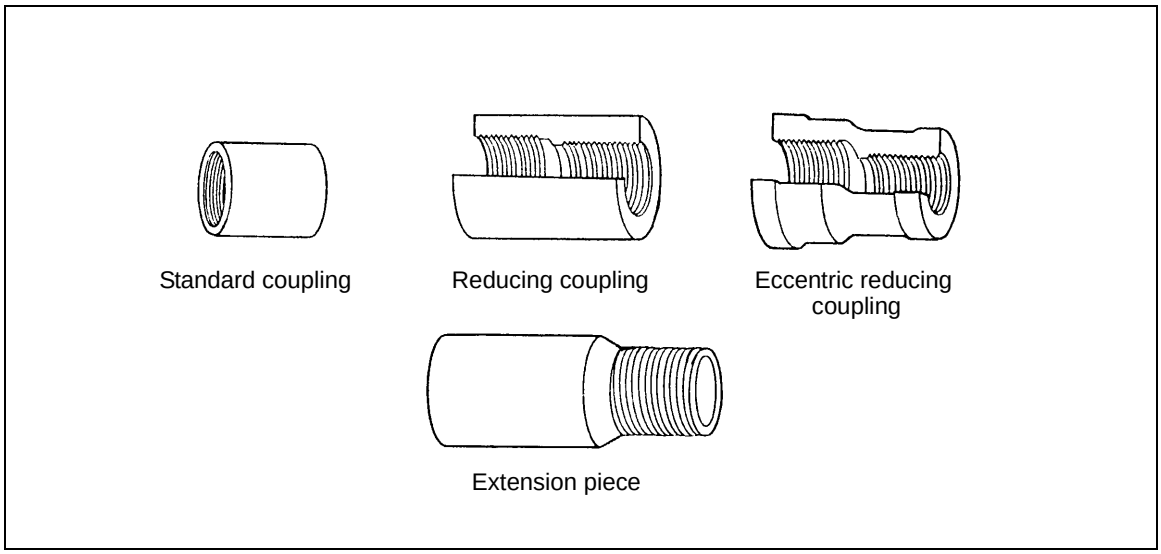

Figure 6-23. Couplings

Unions

6-52. Unions *(Figure 6-24, page 6-22)* are used to join the ends of two pipes that can be turned or disconnected.

- **Ground**. A ground union has three distinct parts: a shoulder piece with female threads; a thread piece with female and male threads; and a ring (or collar) with an inside flange that matches the shoulder of the shoulder piece and a female thread that matches the male thread of the thread piece. The pipes are screwed to the thread and shoulder pieces. They are drawn together by the collar, making a gastight and watertight joint.
- **Flange**. The flange union has two parts, each with a female thread, that are screwed to the pipes to be joined. Nuts and bolts pull the flanges together. A gasket between the flanges makes a gastight and

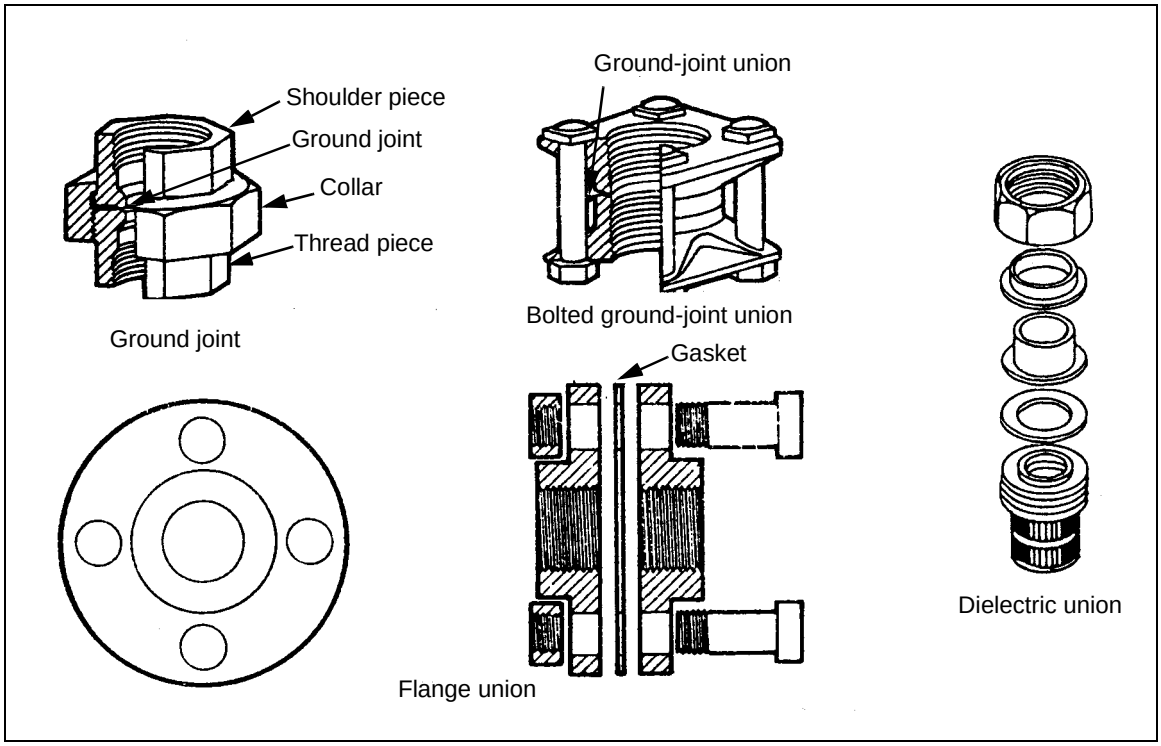

Figure 6-24. Unions

watertight joint. Plain-faced flanges are shown in *Figure 6-24*. They may have male and female faces or tongue and groove faces.

- **Dielectric**. Dielectric unions are used to connect dissimilar-metal, water supply pipes to prevent electrolysis (corrosion). This union is used when connecting galvanized-steel/iron pipe to copper pipe.

Nipples

6-53. A nipple is used to make an extension from a fitting or to join two fittings. Nipples are pieces of pipe 12 inches or less in length, threaded on each end. There are close, shoulder, and long nipples *(Figure 6-25)*.

Plugs and Caps

6-54. Plugs and caps are used to seal off openings in other fittings or pipe ends *(Figure 6-25)*. These fittings seal off a water system for testing. This rough-in system is in place until the fixtures are installed.

Crosses

6-55. A cross joins two different pipelines in the same plane, making them perpendicular to each other *(Figure 6-25)*. Crosses can also be side-outlet and reducing.

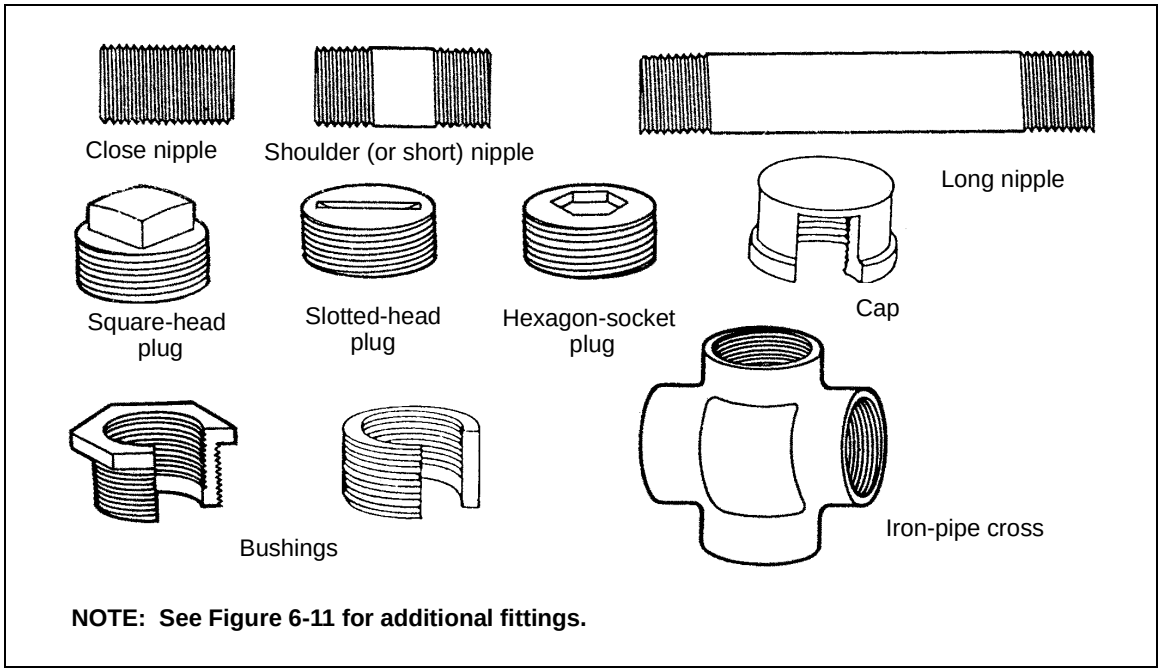

Figure 6-25. Nipples, Plugs, Caps, Bushings, and Cross

Bushings

6-56. A bushing is used to reduce a fitting outlet or to connect a pipe to a larger outlet. A bushing can be a pipe bushing and/or a face bushing *(Figure 6-25)*.

CUTTING AND REAMING

6-57. Steel pipe is cut and reamed using a vise, pipe cutter, and reamer *(Figure 6-26)*. To avoid pipe waste, use *Figure 6-27, page 24,* and the following steps:

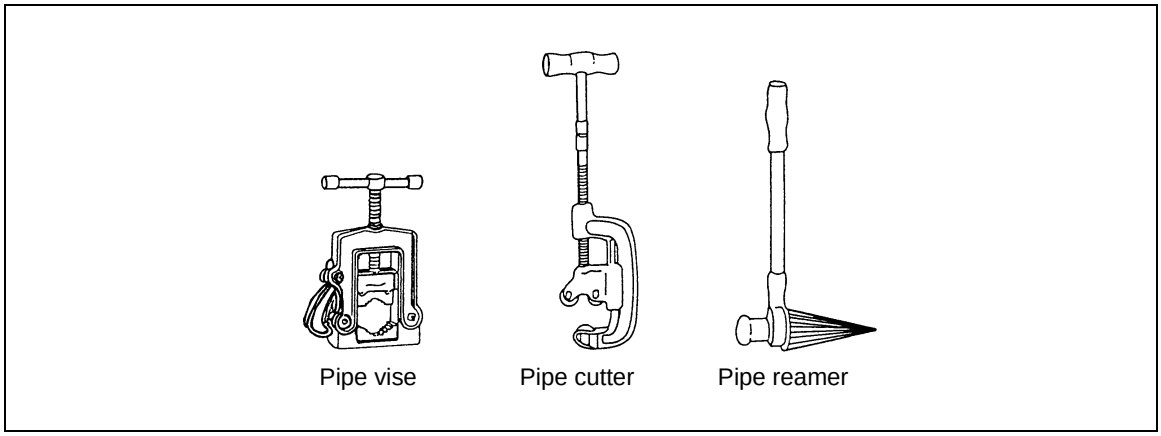

Figure 6-26. Steel-Pipe Tools

Step 1. Determine the length of pipe and mark the spot for the cut.

Step 2. Lock the pipe tightly in the vise with the cutting mark about 8 inches from the vise.

Step 3. Open the jaws of the cutter, using the single-wheel cutter, by turning the handle counterclockwise.

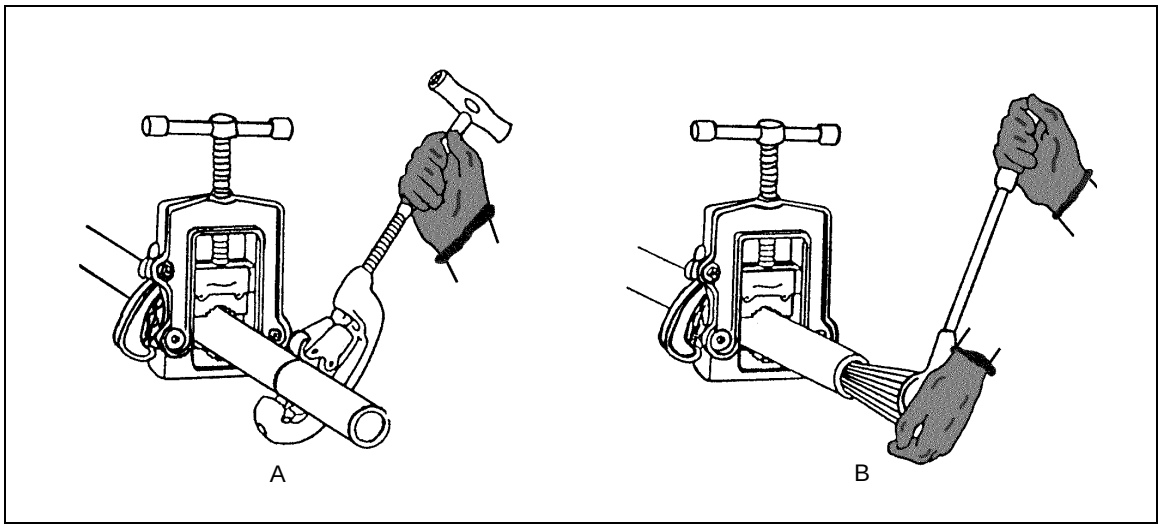

Figure 6-27. Cutting and Reaming Steel Pipe

Step 4. Place the cutter around the pipe with the cutting wheel exactly on the mark. The rollers will ensure a straight cut (*Figure 6-27, A*). If using a three-wheel cutter, place the cutting wheel of the movable jaw on the mark; ensure that all three wheels are at right angles to the centerline of the pipe.

Step 5. Close the vise jaws lightly against the pipe by turning the handle clockwise.

Step 6. Give the handle a quarter turn clockwise when the cutting wheel and rollers have made contact with the pipe.

Step 7. Apply cutting oil and rotate the cutter completely around the pipe, making a quarter turn on the handle for each complete revolution around the pipe. Continue the action until the pipe is cut.

Step 8. Push the reamer into the pipe. Turn the reamer clockwise in short, even strokes, while keeping steady pressure against the pipe (see *Figure 6-27, B*) until the inside burrs are removed.

Step 9. Remove the outside burrs with a file if using a three-wheel cutter.

THREADING

NOTE: There are several types of threads, such as automotive that produces fine and course threads and plumbing and pipefitting threads identified as NPT. Pipe threads are cut at a taper.

6-58. Many types of pipe-threading sets are in use. A common set contains a ratchet, nonadjustable stock with solid dies, and individual guides *(Figure 6-28)*. A die and guide must be the same size to fit the pipe size being threaded. When using a threading set, refer to the manufacturer's or the accompanying instructions with the following steps:

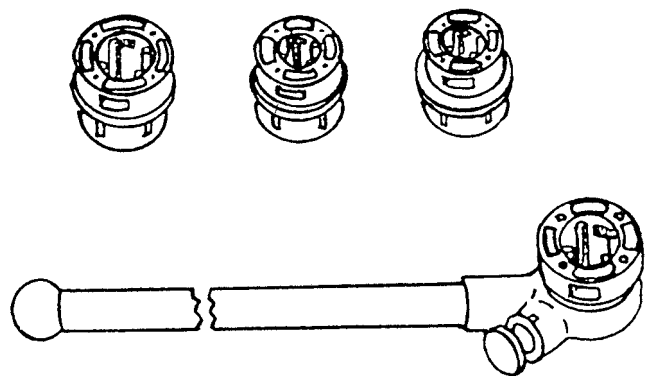

Figure 6-28. Stock and Die Set

NOTE: Identify pipe dies as NPT to ensure that this is the type being used for pipe threading.

Step 1. Lock the pipe securely in the vise with enough pipe projecting for threading.

Step 2. Slide the diestock over the end of the pipe with the guide on the inside. Push the die against the pipe with one hand *(Figure 6-29)*.

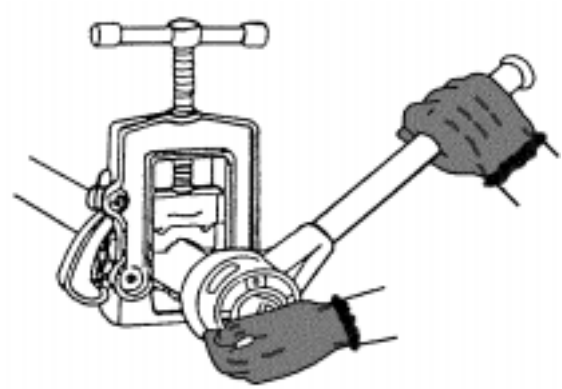

Figure 6-29. Threading Pipe

Step 3. Make three or four short, slow, clockwise strokes until the die is firmly started on the pipe. Apply a generous amount of cutting oil on the die.

Step 4. Give the stock a complete clockwise turn, and then turn it counterclockwise a quarter turn. This will clear cut metal from the die and burrs from the new threads. Continue to apply oil.

Step 5. Continue Step 4 until 1/2 to 1/4 inch (or two threads) extends from the diestock. Continued threading will cause the thread taper to be lost.

Step 6. Carefully turn the diestock counterclockwise until the die is free of the cut threads.

Step 7. Use a heavy rag to wipe away excess oil and a wire brush to remove any chips. The pipe is now ready to be joined.

6-59. Too much pipe thread is as undesirable as too little. A good rule is to cut threads until the pipe extends about 1/4 inch from the base of the dies. *Table 6-4*, gives information to determine thread length.

Table 6-4. Thread Length Data

Normal Pipe Size (in Inches)	Threads Per Inch	Approximate Length of Thread (in Inches)	Approximate Numbers of Threads to be Cut	Approximate Total Thread Makeup Engagement (in Inches)
1/4	18	5/8	11	3/8
3/8	18	5/8	11	3/8
1/2	14	3/4	10	7/16
3/4	14	3/4	10	1/2
1	11 1/2	7/8	10	9/16
1 1/4	11 1/2	1	11	9/16
1 1/2	11 1/2	1	11	9/16
2	11 1/2	1	11	5/8
2 1/2	8	1 1/2	12	7/8
3	8	1 1/2	12	1
3 1/2	8	1 5/8	13	11/16
4	8	1 5/8	13	11/16
5	8	1 3/4	14	13/16
6	8	1 3/4	14	13/16

JOINING

6-60. Fittings are normally screwed to the pipe after it is threaded, while the pipe is still in the vise. This ensures a good fit. The assembled pipe and fittings should then be screwed into the proper place in the installation. Use *Figure 6-30* and the following joining steps:

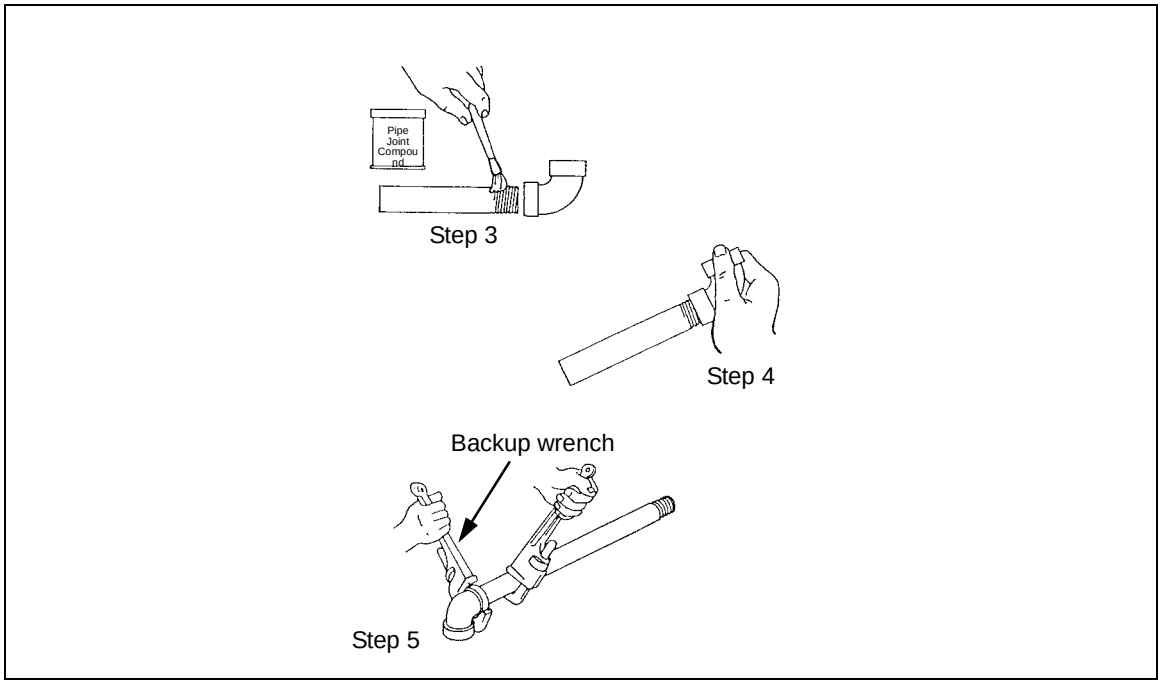

Figure 6-30. Joining Threaded Pipe

Step 1. Check the fitting threads for cleanliness and damage. If necessary, clean with a wire brush or replace.

Step 2. Repeat Step 1 for the pipe threads.

Step 3. Apply pipe-joint compound or Teflon tape to the *pipe* threads only *(Figure 6-30)*.

Step 4. Screw the fitting on, hand tight *(Figure 6-30)*.

Step 5. Tighten the fitting using two pipe wrenches, one on the fitting (backup wrench) and the other on the pipe *(Figure 6-30)*, provided no vise is available. The backup wrench keeps the fitting from turning.

COPPER TUBING AND FITTINGS

6-61. Copper tubing is lightweight, easily joined, and corrosion-resistant. It can be rigid or flexible, and it is classified by its wall thickness *(Figure 6-31, page 6-28)*.

USE

6-62. Copper tubing is used for hot- and cold-water supply systems, certain drainage applications, and venting.

TYPES AND SIZES

6-63. Types and sizes of copper tubing include the—

- **K**. K is a thick-walled, rigid or flexible copper tubing available in 20-foot lengths or 100-foot coils. Diameter sizes range from 1/4 inch to 12 inches.

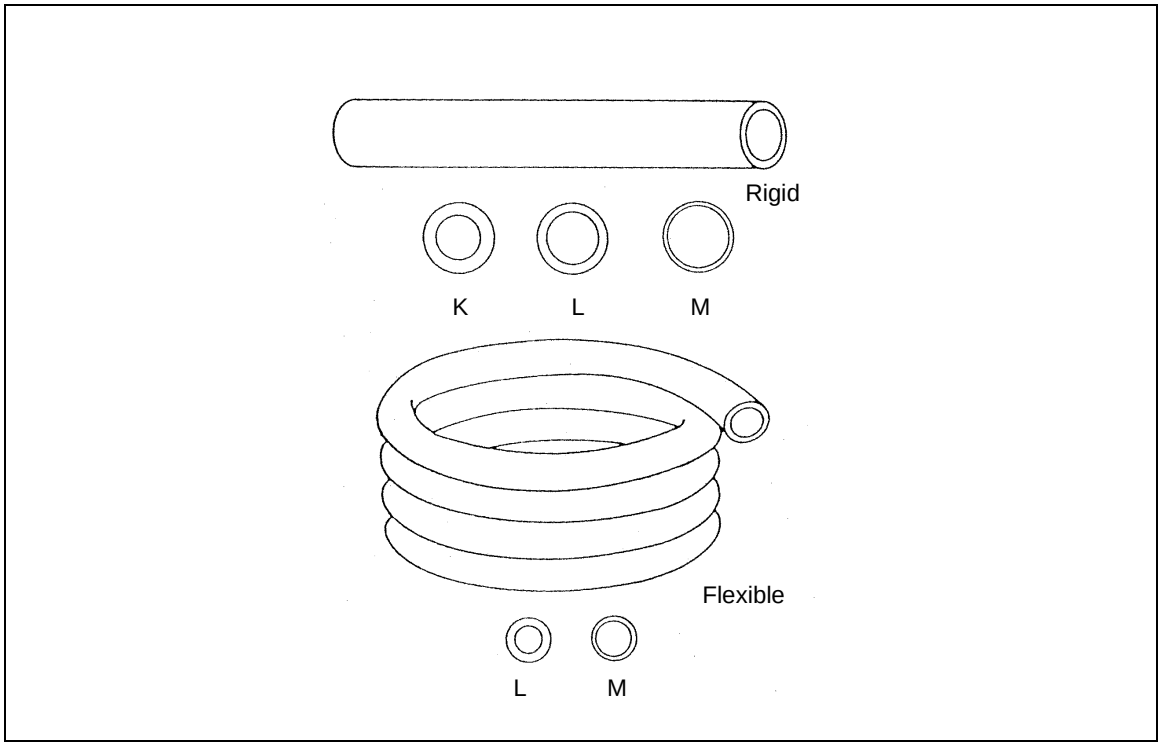

Figure 6-31. Copper Tubing

- **L**. L is a medium-walled, rigid or flexible copper tubing available in 20-foot lengths or 100-foot coils. Diameter sizes are the same as K.
- **M**. M is a thin-walled, rigid copper tubing available in 20-foot lengths. Diameter sizes are the same as K and L.
- **Drain waste vent (DWV)**. DWV is available in 20-foot lengths. Diameter sizes range from 1 1/4 to 8 inches.

FITTINGS

6-64. Fittings for copper tubing can be solder, flared, or compression types *(Figure 6-32)*.

Solder

6-65. Solder fittings can be used with either rigid or flexible copper tubing. The fitting sizes are similar to galvanized-steel/iron fittings. Sizes are identified in the same manner.

Flared

6-66. Flared fittings are used with flexible copper tubing that has flared ends. Fitting sizes range from 3/8 inch to 3 inches in diameter.

DWV

6-67. DWV fittings are similar to cast-iron fittings of the solder type.

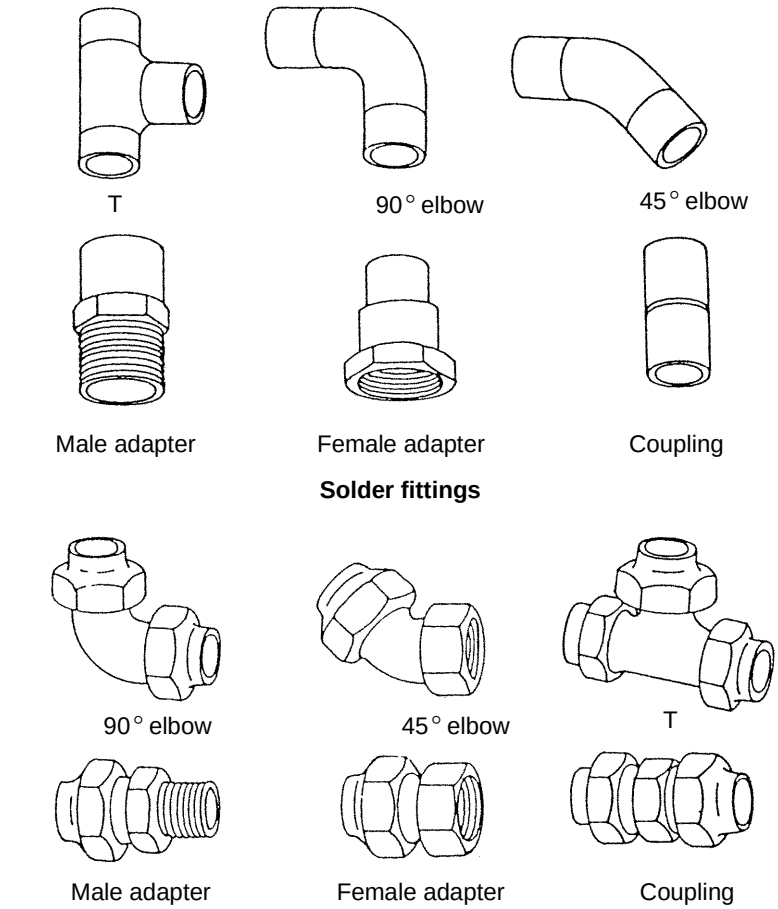

NOTE: See Figure 6-11 for additional fittings.

Figure 6-32. Copper-Tubing Fittings

MEASURING

6-68. Measure copper tubing using one of the methods described in *paragraph 6-18, page 6-5*.

CUTTING AND REAMING

6-69. Copper tubing can be cut with a tubing cutter or a fine-tooth hacksaw (32 teeth per inch), as shown in *Figure 6-33, page 6-30*. Use the following steps to make a cut:

Step 1. Determine the length of tubing required and mark the spot for the cut.

Step 2. Set the cutting wheel on the mark and turn the cutter knob clockwise to get a bite on the tubing.

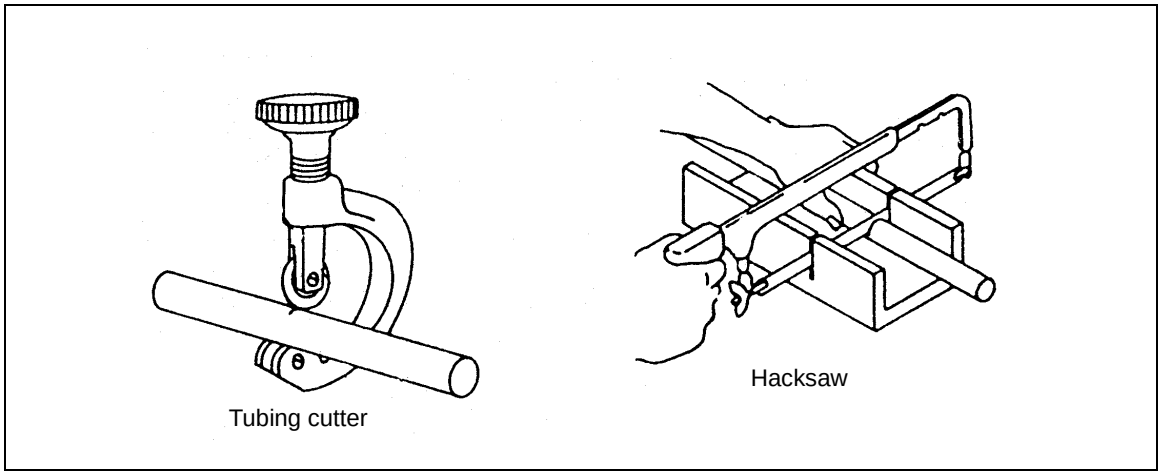

Figure 6-33. Cutting Copper Tubing

Step 3. Hold the tubing firmly with one hand and use the other hand to turn the cutter clockwise around the tubing until the tubing is cut. If using a hacksaw, place the tubing in a miter box or a jig made of lumber to make a square cut.

Step 4. Ream the tubing's cut end with the reamer attached to the tubing cutter. If the cutter does not have a reamer, use a fine metal file.

JOINING

Soldered Joint

6-70. Soldered joints are used to connect rigid copper tubing. The following tools and materials are needed: a heating torch, 95-5 (95 percent tin and 5 percent aluminum) nonacid solder, soldering flux, and emery cloth or steel wool *(Figure 6-34)*. Use *Figure 6-35* and the following steps to make a soldered joint:

Step 1. Inspect the end of the tubing to be sure it is round, free of burrs, and cut square.

Step 2. Clean the end of the tubing and the inside of the fitting to a bright shine with emery cloth or fine steel wool.

Step 3. Apply a thin coat of flux to the shined end of the tubing and fitting *(Figure 6-35)*.

Step 4. Push the fitting onto the tubing and give it a quarter turn to spread the flux evenly *(Figure 6-35)*.

Step 5. Heat the connection with a torch, applying the flame on the fitting *(Figure 6-35)*.

Step 6. When the flux is bubbling, apply the solder to the joint. The solder will flow into and completely around the joint.

Step 7. Clean the joint using a clean rag.

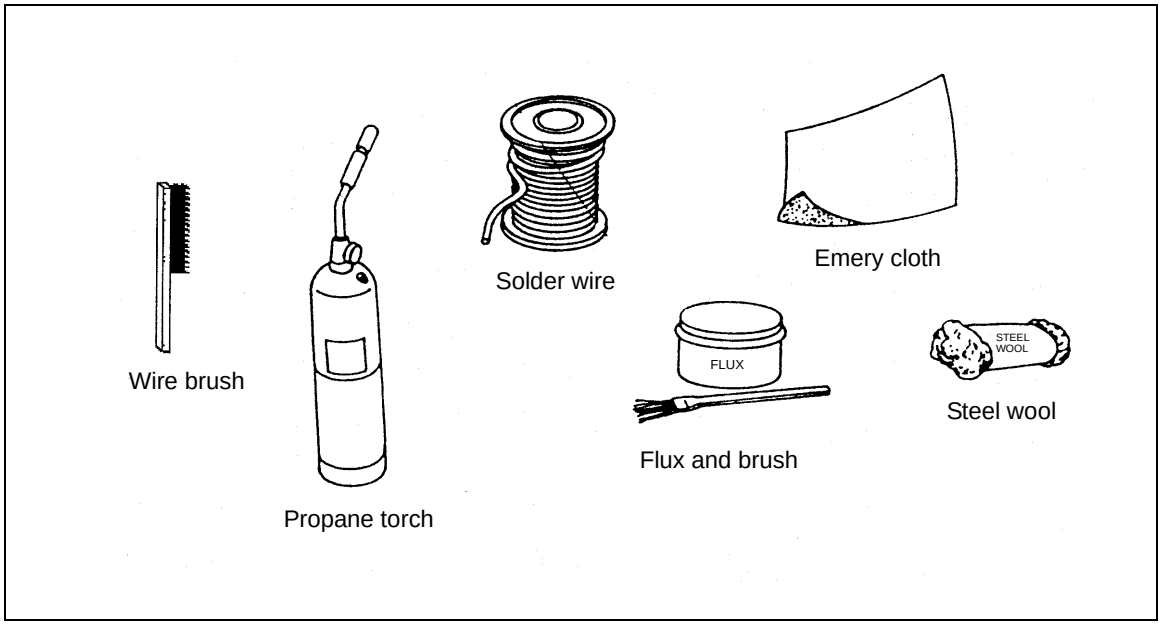

Figure 6-34. Soldering Tools and Materials

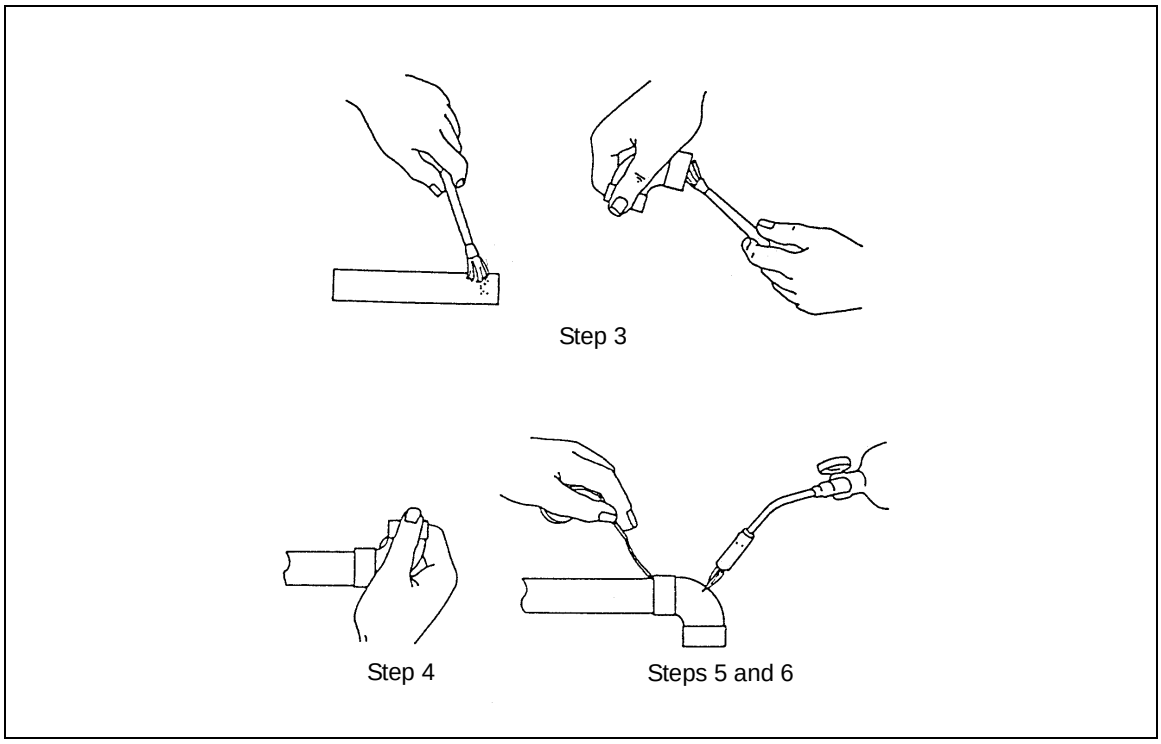

Figure 6-35. Soldering a Joint

CAUTION

Precautions must be taken when soldering. When the joint is close to wood or other combustible material, place an insulation sheet or sheet metal between the fitting and the combustible material before applying the torch flame. To form a leakproof joint, you must keep the joint connection motionless while the solder is cooling.

Flared Joint

6-71. A flared joint is used with flexible copper tubing. The flare on the end of the tubing can be made with a flaring tool or a flanging tool *(Figure 6-36)*. Use the following procedure and *Figure 6-37* for flaring and flanging flexible copper tubing:

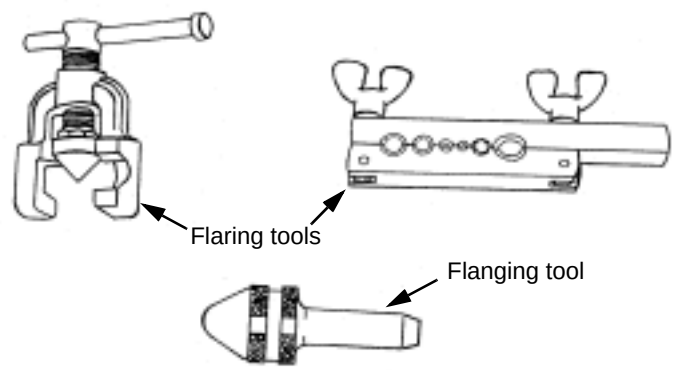

Figure 6-36. Flaring and Flanging Tools

Step 1. Inspect the end of the tubing to ensure that it is free of burrs and is cut square.

Step 2. Remove the flange nut from the fitting and slide its unthreaded end onto the tubing first.

Step 3. Flare the end of the tubing with either a flaring tool or a flanging tool.

- For the *flaring* tool method, loosen the wing nuts on the flaring tool, and place the tubing in the correct size hole. Make the tubing's end even with the tool's surface. Then tighten the wing nuts. Finally, turn the yoke cone down into the tubing until the flare fills the beveled pad of the hole.
- For the *flanging* tool method, hold the flanging tool on the end of the tubing so that it is centered and straight. Then, using a hammer, tap the flanging tool until the flare fills the recess in the flanging nut.

Step 4. Slide the flare/compression nut up to the flared end and screw it on the fitting hand tight, then tighten the flare/compression nut (*Figure 6-38).*

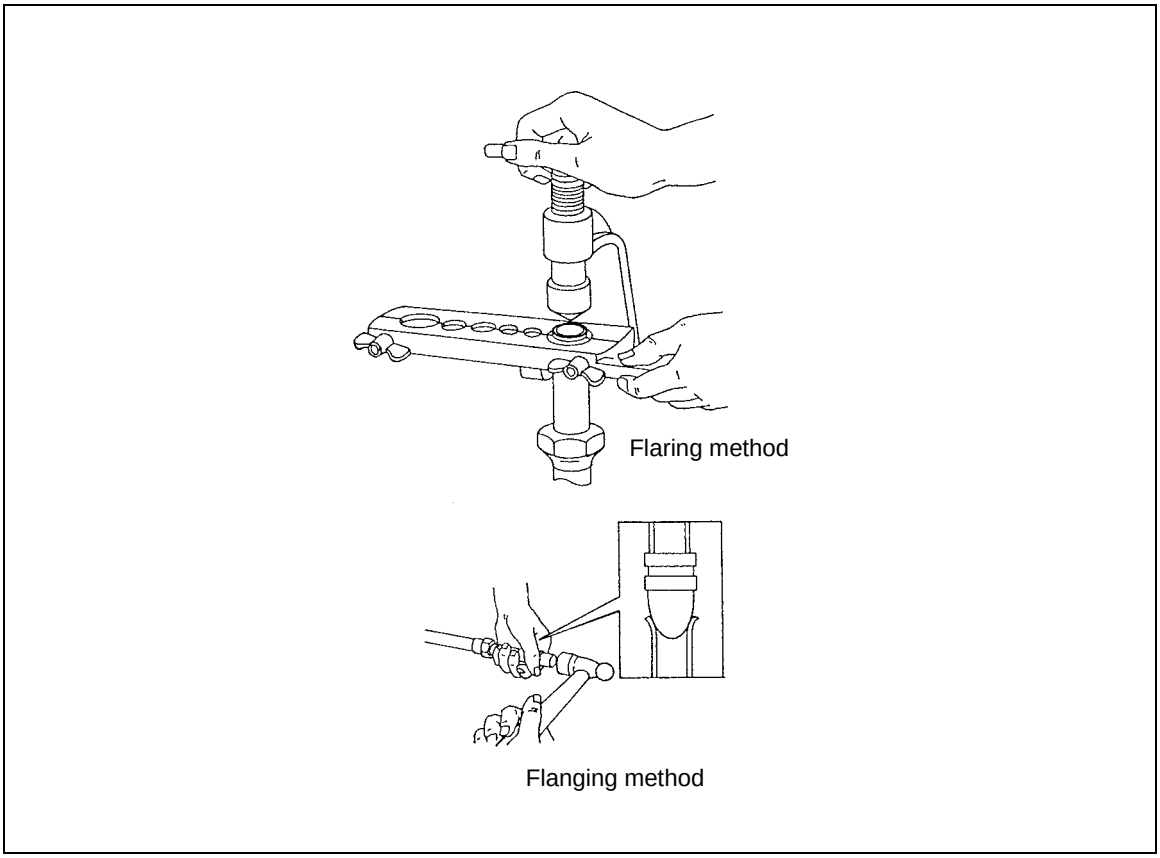

Figure 6-37. Flaring and Flanging Flexible Copper Tubing

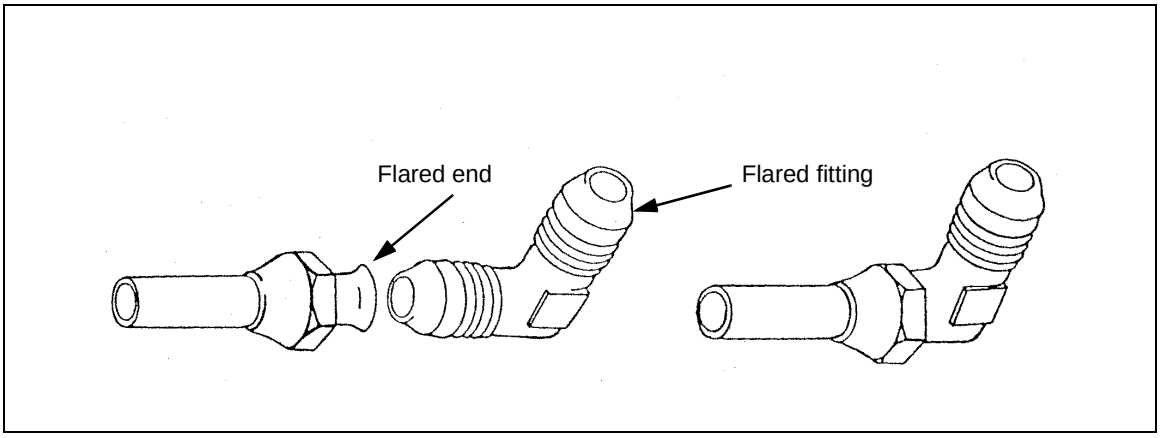

Figure 6-38. Flared Joint

Mechanical-Compression Joint

6-72. A mechanical-compression joint is used to connect a fixture's water supply tubing to the shutoff valves *(Figure 6-39, page 6-34)*. Use the following procedures:.

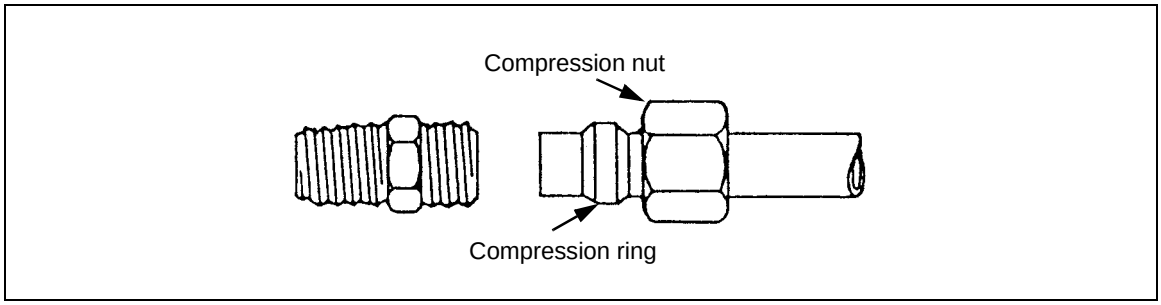

Figure 6-39. Mechanical-Compression Joint

Step 1. Cut or bend the tubing to the required length.

Step 2. Slide the compression nut onto the tubing.

Step 3. Slide the compression ring onto the tubing.

Step 4. Screw the compression nut onto the fitting by hand.

Step 5. Tighten the nut. The ring compresses to form a sealed leakproof joint.

Swaged Joint

6-73. Swaging is used to join two sections of thin-walled copper tubing without using a fitting. The connection is soldered to form a leakproof joint. The tools required are a swaging-tool set and a ball peen hammer *(Figure 6-40)*. Use *Figure 6-41* and the following procedure for swaging copper tubing:

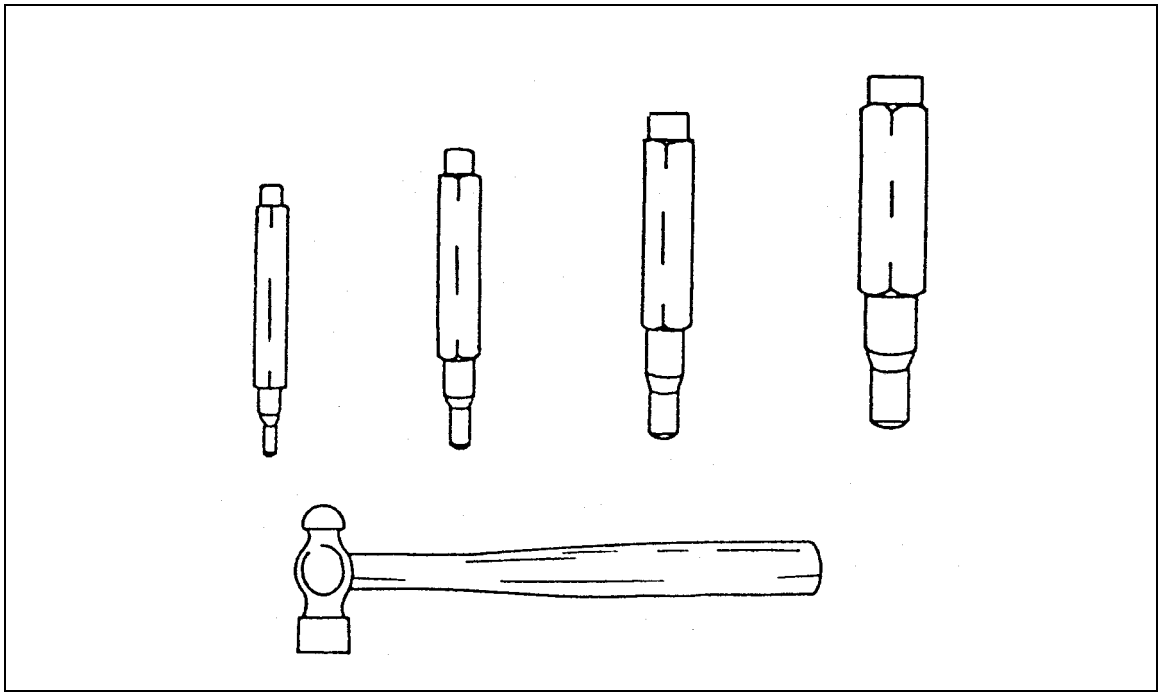

Figure 6-40. Swaging Tools

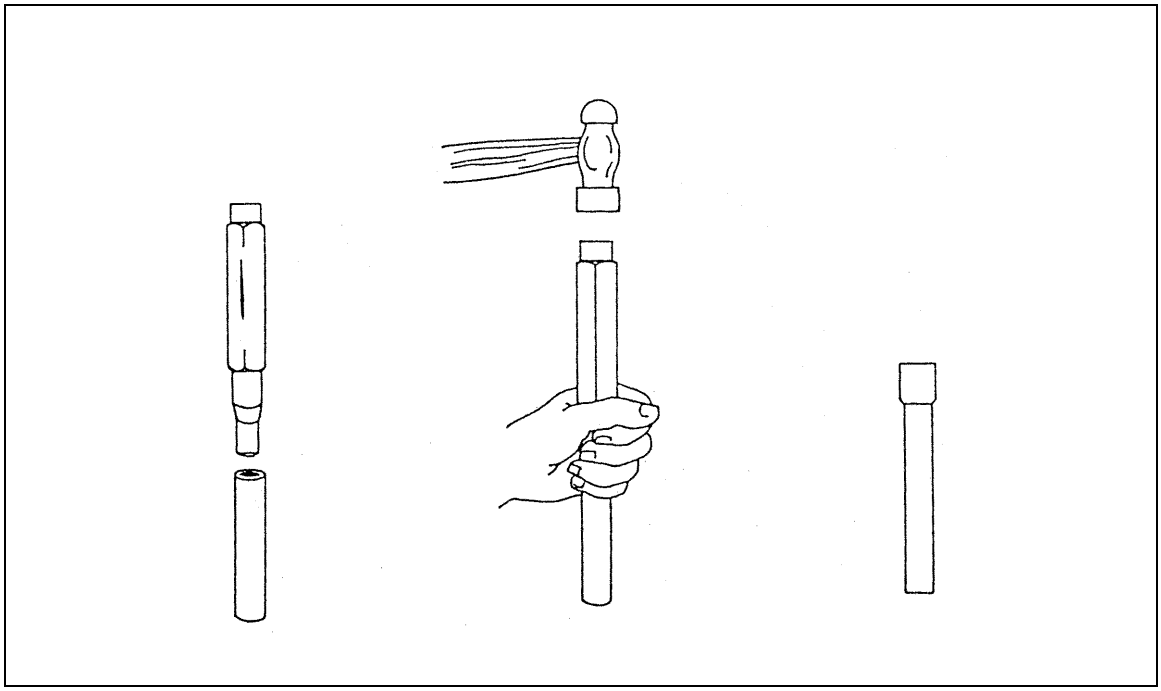

Figure 6-41. Swaging Copper Tubing

Step 1. Inspect the tubing end to make sure it is free of burrs and is cut square.

Step 2. Place the correct size swaging tool into the tubing (with one hand), centered and straight.

Step 3. Tap the swaging tool firmly with the ball peen hammer to enlarge the tubing's end.

Step 4. Connect the two sections of tubing and solder the joint.

BENDING

6-74. Spring benders are used to bend flexible copper tubing having 1/4- to 7/8-inch outside diameters. Slide the correct size spring bender over the tubing to the area of the bend. Bend the spring and tubing together *(Figure 6-42)*.

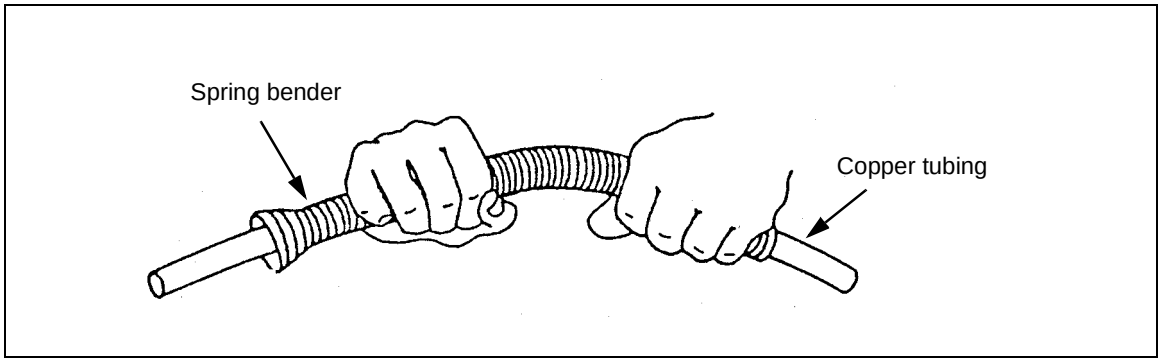

Figure 6-42. Bending Flexible Copper Tubing

SUPPORTING PIPE JOINTS

6-75. Copper tubing should be supported horizontally and vertically at appropriate points. The method of support depends on the size of the tubing and the location of all the fittings.

PLASTIC PIPE AND FITTINGS

6-76. Plastic piping is lightweight and rigid or flexible (similar to copper tubing shown in *Figure 6-31, page 6-28*). It is easily joined and is corrosion-resistant.

USE

6-77. Plastic pipe can be used for water or waste systems. It is used for hot- or cold-water piping and for drain, waste, and vent piping.

TYPES AND SIZES

6-78. Plastic pipe is classified by the acronym for the type of material from which it is made.

Polyvinyl Chloride (PVC)

6-79. PVC pipe is cream or white and used only for cold-water pipelines, sanitary drainage, and venting. It comes in 10- and 20-foot lengths. Diameter sizes range from 1/2 inch to 6 inches.

CPVC

6-80. CPVC pipe is light or cream and used for hot-water pipelines. It can also be used for cold-water lines. It comes in 10-foot lengths. Diameter sizes are 1/2 inch and 3/4 inch.

ABS

6-81. ABS pipe is black or gray and used for above- and below-ground sanitary drainage and venting. It comes in 10- and 20-foot lengths. Diameter sizes range from 1 1/4 to 6 inches.

Polybutylene (PB)

6-82. PB pipe is black or dark gray and used for cold-water lines. It is available in coils of 100 feet or more. Diameter sizes range from 3/4 inch to 2 inches. It is costly, requires special fittings, and is not widely used.

Polyetylene (PE)

6-83. PE pipe is black and used for cold-water lines and sprinkler systems. It comes in coils of 100 feet. Diameter sizes range from 3/4 inch to 2 inches.

FITTINGS

6-84. Fitting sizes for PVC and CPVC piping are similar to steel and copper fittings; however, joining is usually done with epoxy or plastic sealants, rather

than threading or soldering. Checks should be made before performing a project. Plastic pipe fittings are shown in *Figure 6-43*.

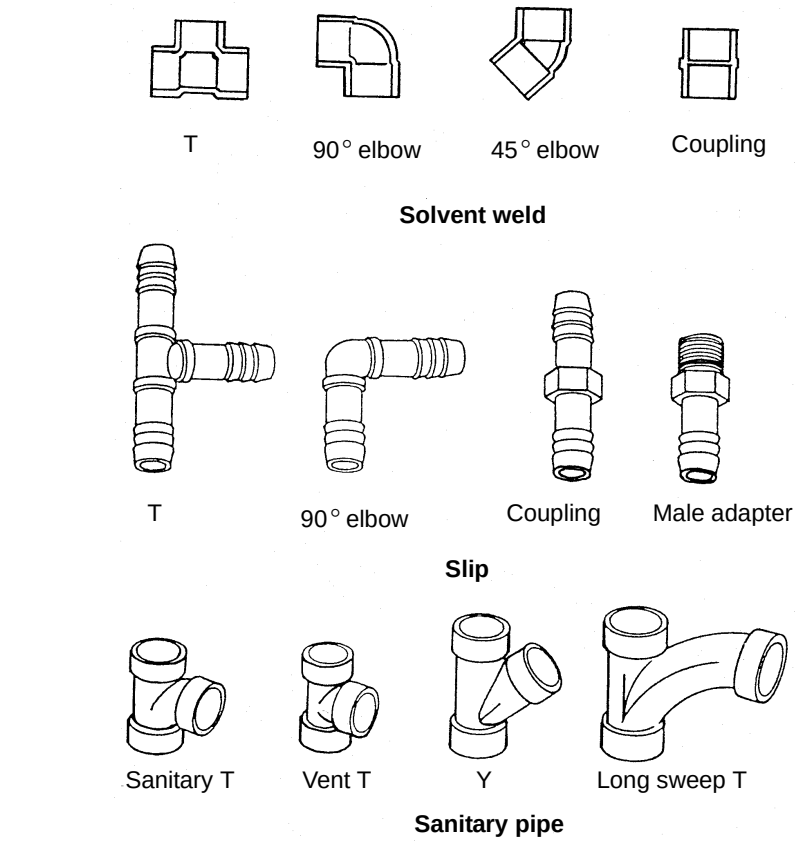

NOTE: See Figure 6-11 for additional fittings.

Figure 6-43. Plastic Pipe Fittings

PVC

6-85. These fittings are used for water and waste piping.

CPVC

6-86. These fittings are used only for CPVC hot- and cold-water system piping.

ABS

6-87. These fittings are used only for ABS piping in waste and vent systems.

PE

6-88. These fittings are the insertable type used for cold-water and sprinkler-system piping.

MEASURING

6-89. Measure plastic pipe, rigid or flexible, as described in *paragraph 6-18, page 6-5*.

CUTTING

6-90. Use *Figure 6-44* and the following steps to cut plastic pipe:

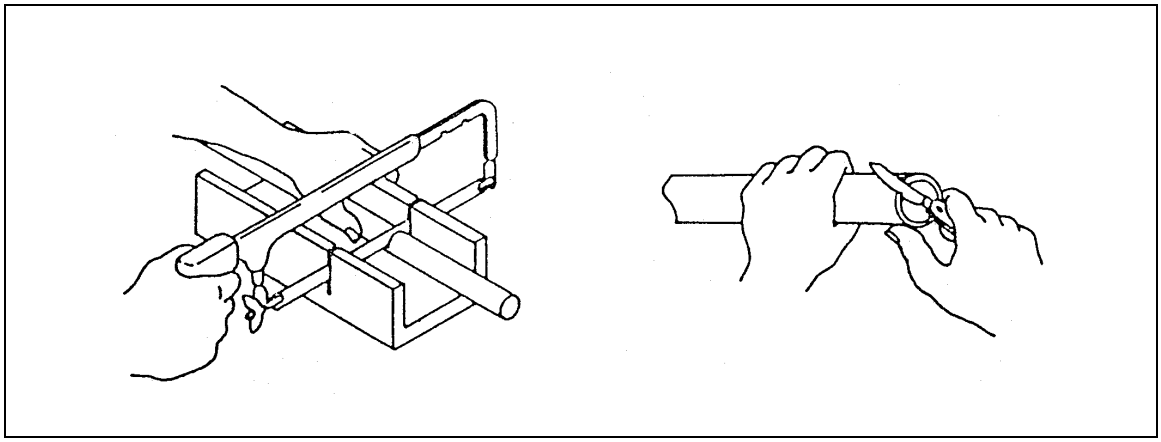

Figure 6-44. Cutting and Removing Burrs From Plastic Pipe

Step 1. Determine the length of pipe required and mark the spot for the cut.

Step 2. Place the pipe in a miter box or jig and cut the pipe with a hacksaw or a fine-tooth handsaw. Use a miter box to get a square cut.

Step 3. Remove burrs from both the inside and the outside of the pipe with a pocketknife. If a pocketknife is not available, use sandpaper.

JOINING

Solvent-Cement Weld Joint

6-91. This joint is made by using a cleaning primer and solvent cement on the pipe and fitting. Solvent cement consists of a plastic filler (same material for each type of plastic pipe) dissolved in a mixture of solvents. Use the appropriate solvent cement for the type of pipe being used. The solvent cement melts the plastic of the pipe and the fitting to weld them together. Since solvent cement sets fast, a plastic pipe joint is completed quickly *(Figure 6-45)*. Use the following steps to join plastic pipe with solvent cement:

Step 1. Inspect the pipe end for burrs and the fitting for cracks.

Step 2. Clean the pipe and the inside of the fitting with an authorized cleaning primer, using a clean rag.

Step 3. Coat the outside of the pipe end and the inside of the fitting with solvent cement.

Step 4. Push the pipe as quickly as possible into the fitting as far as it will go. A small bead of cement will be visible.

Step 5. Give the fitting a quarter turn to spread the solvent cement evenly.

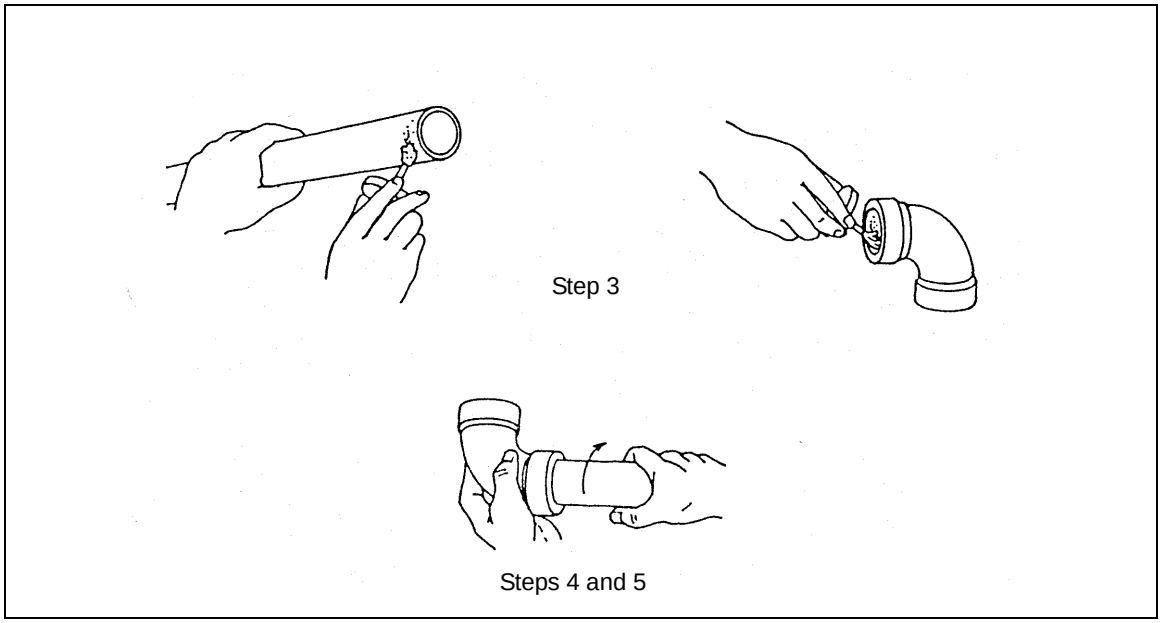

Figure 6-45. Rigid Plastic Pipe Joint

Step 6. Hold the joint connection for about 30 seconds to be sure it is solidly set.

Step 7. Wipe off all excess cement.

Insert Fitting Joint

6-92. This joint is made by sliding and clamping flexible plastic pipe onto an insert fitting *(Figure 6-46)*, as follows:

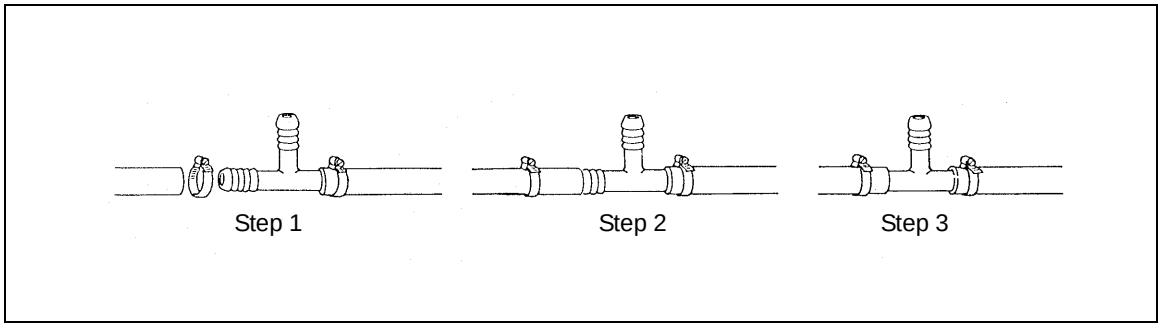

Figure 6-46. Flexible Plastic Pipe Joint

Step 1. Slide a clamp over the flexible pipe.

Step 2. Push the pipe onto the insert fitting to the last serration.

Step 3. Slide the clamp over the pipe and tighten the clamp with a screwdriver.

SUPPORTING PIPE JOINTS

6-93. Plastic pipe is not as stiff as metal pipe; therefore, the pipe runs (both horizontal and vertical) should be supported more often. Support joint connections in the same manner as metal pipe.

OTHER TYPES OF PIPES AND FITTINGS

BITUMINOUS-FIBER PIPE AND FITTINGS

Use

6-94. Bituminous-fiber pipe, often called orange burg, is used underground to install house-to-sewer and house-to-septic-tank waste lines and storm drainage lines to dry wells. Perforated pipe is used for septic-tank disposal fields and for footing drains and other subsurface drainage. It is lightweight, easily joined, and corrosion-resistant.

Types and Sizes

6-95. This pipe is available in plain and perforated types. Both plain and perforated pipe comes in 5- and 8-foot lengths. The plain pipe ends are tapered 2 degrees from a 1/16-inch shoulder *(Figure 6-47)*. Diameter sizes range from 2 to 8 inches.

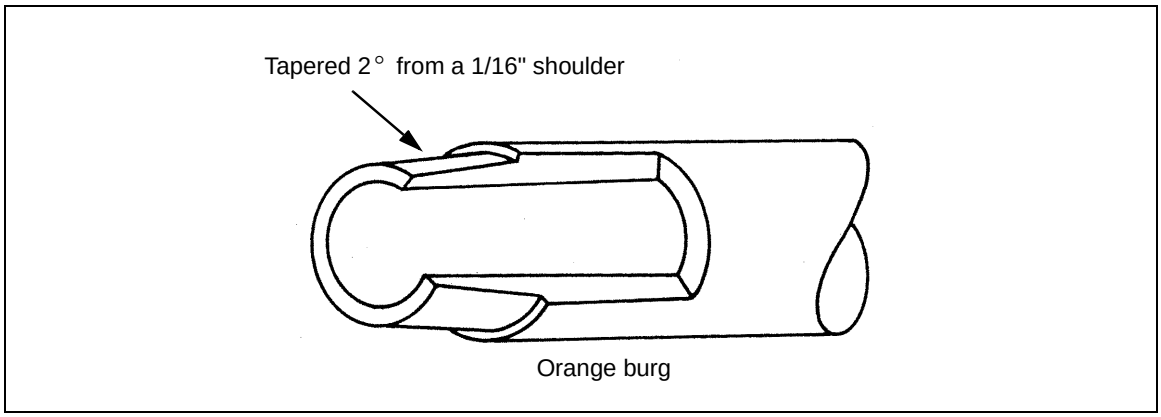

Figure 6-47. Bituminous-Fiber Pipe

Fittings

6-96. Fittings for bituminous-fiber pipe are similar in shape to cast-iron fittings. An adapter fitting can be used to connect the pipe to cast-iron, threaded-steel, or plastic pipe *(Figure 6-48)*. Join plain piping by driving the pipe and fitting together. Join perforated pipe with a snap-collar fitting.

Cutting

6-97. Fiber pipe is easily cut with a crosscut or rip handsaw. The crosscut produces less shredding and makes a cleaner cut. A miter box ensures the required square cut.

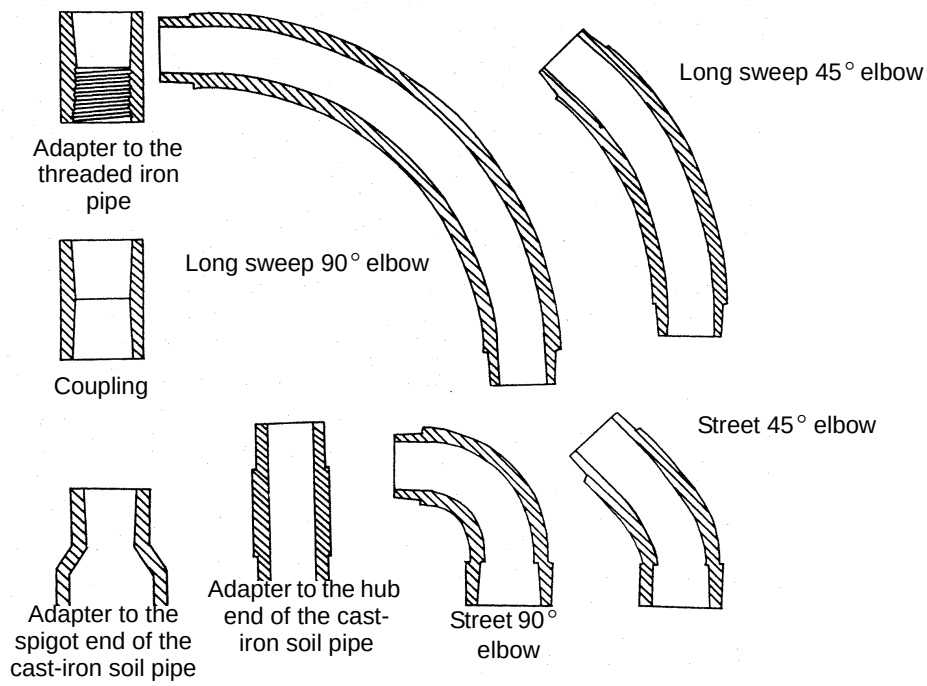

NOTE: See Figure 6-11 for additional fittings.

Figure 6-48. Bituminous-Fiber Pipe Fittings

Tapering

6-98. Use the following steps to taper fiber pipe:

Step 1. Ensure that the end of the pipe has been cut square.

Step 2. Insert the center guide of the tapering tool *(Figure 6-49, page 6-42)* into the pipe until the cutter bracket rests on the end of the pipe.

Step 3. Expand the center guide by turning the expander handle clockwise until the guide fits tightly inside the pipe.

Step 4. Set the cutter against the pipe and tighten the nut on the cutter bracket.

Step 5. Turn the handle one full turn.

Step 6. Loosen the cutter bracket nut, reset the cutter against the pipe, and tighten the nut again.

Step 7. Repeat steps 5 and 6 until the shoulder at the end of the taper is about 1/16-inch wide.

Step 8. Turn the expander handle counterclockwise to loosen the center guide and withdraw the tool.

NOTE: Do not take too big a cut on one turn. Cuts should be thin and yield small, flaky bits. If an ordinary vise is used to hold the pipe for tapering, be careful not to crush the pipe by over tightening the vise.

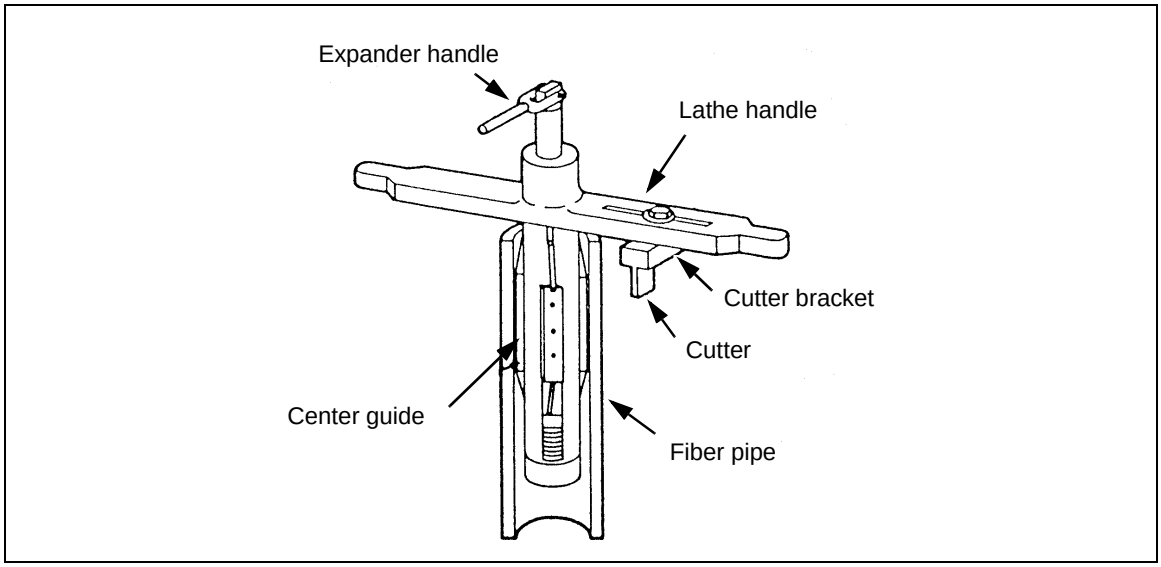

Figure 6-49. Fiber-Pipe Tapering Tool

Joining

6-99. Join fiber pipe and fittings with a friction joint *(Figure 6-50)*, as follows:

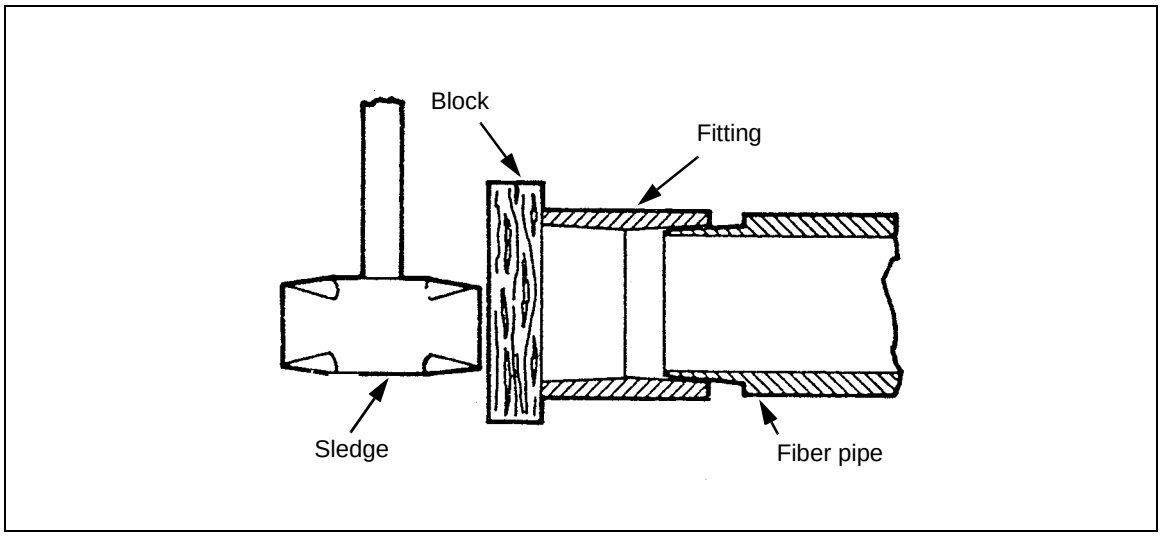

Figure 6-50. Joining Fiber Pipe

Step 1. Inspect the tapers on both the pipe and fitting to make sure they are free from grease or burrs.

Step 2. Put the fitting and pipe together. The fitting should slide up easily to within 1/4 to 1/3 inch of the shoulder on the taper.

Step 3. Place a wooden block against a fitting to be joined to an installed pipe or against the pipe end to be joined to an installed fitting. Hold the block steady with one hand and have a helper brace the line during the driving.

Step 4. Tap the block lightly with a sledge *(Figure 6-50)* to drive the pipe and fitting together until the fitting butts against the taper shoulder. The driving produces enough heat to fuse a watertight joint of the pipe and fitting.

CONCRETE PIPE AND FITTINGS

Use

6-100. Concrete pipe is used underground for sanitary and storm drainage pipelines.

Types and Sizes

6-101. This pipe is made with cement and sand. Cement pipe is supplied in two grades: (1) nonreinforced and (2) reinforced with wire or steel bars. This pipe comes in various lengths and diameters.

Fittings

6-102. A coupling is used to join pipe lengths. It consists of a cement sleeve and two rubber rings *(Figure 6-51)*. Other fittings are similar to cast-iron soil pipe fittings.

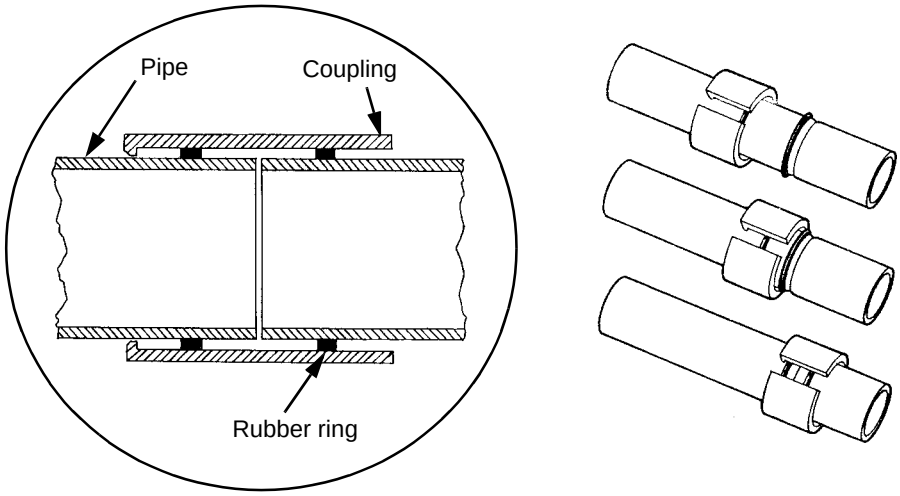

NOTE: Special pulling tools are used to pull the sleeve coupling. The tool is anchored to the second pipe and the coupling is pulled toward it.

Figure 6-51. Cement-Pipe Coupling

Measuring

6-103. Concrete pipe comes in many sizes and types. In general, measurements may be made as for cast-iron soil pipe, allowing for the distance the spigot enters the hub or where the tongue enters the groove.

Cutting

6-104. Cutting is seldom necessary because of the variety of lengths available. Nonreinforced hub-and-spigot concrete pipe may be cut the same as vitrified-clay pipe. Cutting tongue and groove pipe creates joining difficulties. Methods of cutting reinforced-concrete pipe are not covered in this manual.

Joining

6-105. Joints in concrete pipe are generally made with hot-poured bituminous compound and oakum just as for vitrified-clay pipe. Manufacturer's instructions should be followed when using these joining compounds.

VITRIFIED-CLAY PIPE AND FITTINGS

Use

6-106. Vitrified-clay pipe, also called *terra-cotta*, is used underground for sanitary and storm drainage pipelines outside of buildings.

Lengths and Sizes

6-107. This pipe has hub-and-spigot ends in lengths of 2, 2 1/2, and 3 feet. Diameter sizes range from 4 to 42 inches.

Fittings

6-108. Clay pipe fittings are similar to cast-iron soil pipe fittings.

Measuring

6-109. Measure vitrified-clay pipe using one of the methods in *paragraph 6-18*. The overall length of a pipe section is its laying length plus the length of telescoping. Telescoping varies from 1 1/2 inches for 4-inch pipe to 4 inches for 42-inch pipe.

Cutting

6-110. Since clay pipe comes in short lengths, it seldom has to be cut. When it must be cut, use a brick chisel and hammer. Score the pipe lightly around its circumference and then repeat the process, deepening the cut gradually until the pipe breaks cleanly. Clay pipe is brittle, so cut it with care to avoid uneven breaks.

WARNING

Wear safety glasses when cutting clay pipe to avoid eye injury.

Joining

6-111. Joints on vitrified-clay pipe are made with bituminous compounds with oakum or cement mortar joints molded on the hub-and-spigot ends of the pipe. However, the mechanical-seal joint has replaced the cement joint for this type of pipe.

6-112. **Bituminous-Compound and Cement Mortar Joint.** Use the following steps when making joints:

Step 1. Insert the spigot end of one pipe or fitting into the hub end of another and align the two pipes.

Step 2. Pack the hub with a 3/4-inch layer of oakum.

Step 3. Fill the joint entirely with bituminous compound and tamp in securely.

Step 4. Finish the joint with a neatly beveled edge around the pipe.

Step 5. Remove surplus mortar or bituminous compound.

6-113. **Mechanical-Seal Joint.** An improved type of interlocking mechanical-compression joint, sealed at the factory, has replaced the cement joint for use with vitrified-clay pipe. This speed seal is made of permanent PVC and is called a *plastisol joint connection*. Seal a joint by using the following steps:

Step 1. Spread a solution of liquid soap on the plastisol joint to help the joint slip into place.

Step 2. Insert the spigot end into the bell or hub.

Step 3. Give the pipe a strong push to make the spigot lock into the hub seal.

6-114. **Resilient and Rigid Joints.** Resilient and rigid joints available for this pipe are the same as for fiber pipe *(see paragraph 6-99, page 6-42)*.

CAST-IRON PRESSURE PIPE

6-115. Cast-iron pressure pipe, also called *corporation*, is used for water supply mains. It may be hub-and-spigot pattern or have flanged ends for bolting connections. Fittings similar to those for cast-iron soil pipe are available.

NOTE: Cast-iron pressure pipe is seldom used today.

Chapter 7

Valves and Faucets

A valve is a device (usually made of bronze) to start, stop, and regulate the flow of liquid, steam, or gas into, through, or from pipes. Faucets are valves that turn on or turn off hot and cold water in lavatories, sinks, bathtubs, and showers. This chapter covers installation and repair of valves and faucets.

SECTION I - VALVES

TYPES

7-1. Many types of valves are used. The most common types are shown in *Figure 7-1*. (*Appendix B* includes a list of valves and the symbols used for those valves on construction plans.)

GATE VALVE

7-2. A gate valve is used to start or stop liquid, steam, or gas flow. This valve has a split or solid wedge disk, that fits into a machine surface called a *seat*. Raising the disk to start the flow and seating the disk to stop the flow operates the valve. Gate valves come in three models: (1) rising stem outside screw and yoke, (2) rising stem inside the screw, and (3) nonrising stem inside screw.

GLOBE VALVE

7-3. A globe valve is a compression-type valve that controls the flow of liquid by means of a circular disk, forced (compressed) onto or withdrawn from an annular ring seat that surrounds the opening through which liquid flows. All globe valves operate with a rising stem.

ANGLE VALVE

7-4. An angle valve is a globe valve with the inlet and outlet at a 90-degree angle to one another. These valves are recommended for frequent operation, throttling, and/or a positive shutoff when closed.

CHECK VALVE

7-5. A check valve permits the flow of liquid within the pipeline in one direction only and closes automatically to prevent backflow. A check valve can be a *swing*- or *lift-type*. Swing check valves are used in pipelines where pressure and velocity of flow are low. Lift check valves are used where pressure and velocity of flow are high.

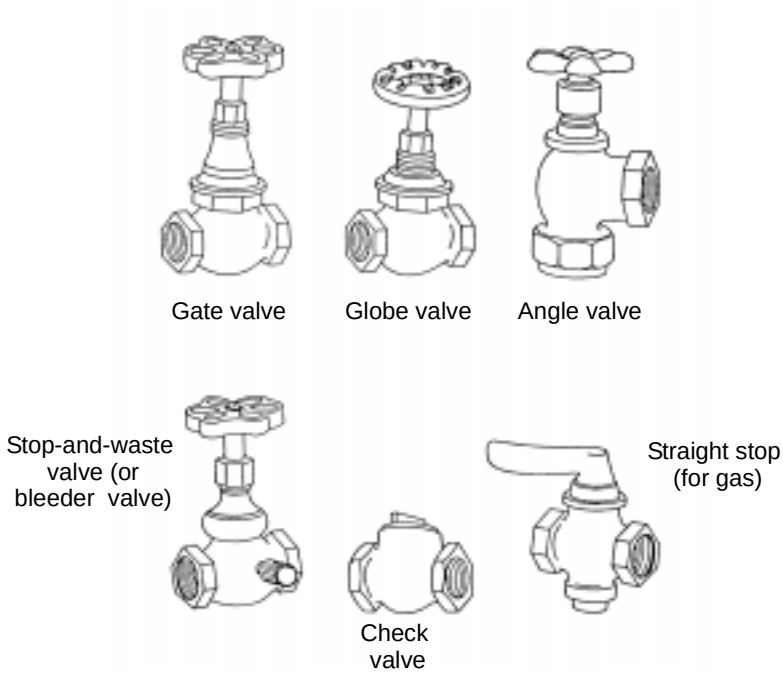

Figure 7-1. Valves

STOP-AND-WASTE VALVE

7-6. A stop-and-waste valve, also known as a *bleeder* valve, has a plug on the outlet side that allows water to be drained from pipelines.

OTHER VALVES

7-7. Other valves include—

- Reducing valves, used to reduce water pressure going into a building.
- Pressure- or temperature-relief valves for water heaters.
- Flushometer valves in urinals and water closets. (See *Figure 4-6, page 4-6*.)
- Foot, check, gate, and relief valves on centrifugal pumps. (See *Chapter 11*.)

NOTE: Gas and water valves are not interchangeable. (See *Appendix B* for a list of valves and their symbols.)

REPAIR AND MAINTENANCE

7-8. Valves and fixture control (operating) devices are a vital part of a plumbing system. Leakage and wear of valves and control devices may require simple or extensive repair. Check all valves regularly for leaks. Most leaks are

from leaky washers or bonnets that have been used for a long period of time. The plumber must determine the malfunction and make the repair.

GATE VALVE

7-9. Repair of the gate valve is similar to that of the globe valve (*Figure 7-2*). However, the part of the gate valve that usually needs attention is the bonnet packing. Use the following to repair a gate valve:

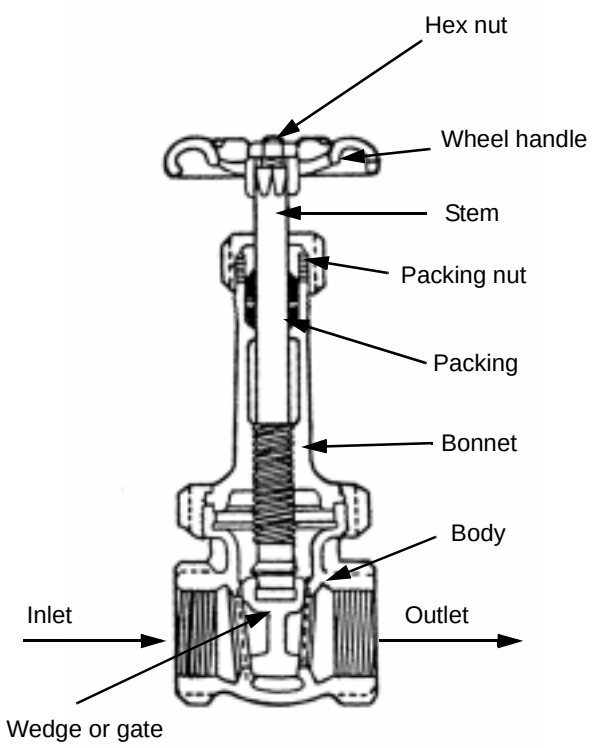

Figure 7-2. Gate Valve Repairs

NOTE: During disassembly, check all parts for wear and replace as needed.

- Leak at the stem and the packing nut.

  Step 1. Tighten the packing nut. If the leak continues, turn the water supply off.

  Step 2. Remove the wheel handle, packing nut, and old packing.

  Step 3. Replace with new packing.

  Step 4. Replace the packing nut and wheel handle.

  Step 5. Turn the water supply on and check for any leaks.
- Valve will not close properly to stop the water flow.

Step 1. Turn the water supply off, then disassemble the valve from the wheel handle to the body.

Step 2. Resurface the disk with a mixture of oil and lapping compound.

Step 3. Reassemble the valve.

Step 4. Turn the water supply on and check for leaks and proper operation.

- Unknown malfunction in valve.

Step 1. Turn the water supply off, then disassemble the valve until the fault is found.

Step 2. Replace the faulty parts and reassemble the valve.

Step 3. Turn the water supply on and check for leaks and proper operation.

GLOBE VALVE

7-10. To repair a globe valve, use the following procedures and *Figure 7-3*.

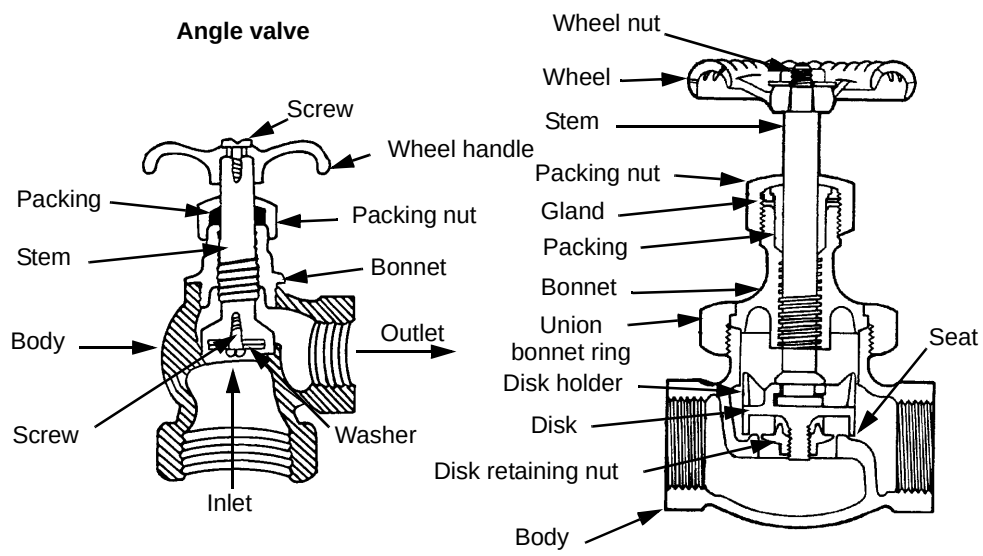

NOTE: Use globe-valve repairs for this valve.

Figure 7-3. Globe Valve Repairs

- Leak at the stem and packing nut.

Step 1. Tighten the packing nut. If the leak continues, turn the water supply off.

Step 2. Remove the wheel handle, packing nut, and old packing.

Step 3. Replace with new packing.

Step 4. Replace the packing nut and the wheel handle.

Step 5. Turn the water supply on and check for leaks.

- Valve will not regulate or control the amount of water flow.

  Step 1. Turn the water supply off.

  Step 2. Disassemble the valve from the wheel handle to the body.

  Step 3. *Composition disk*: Remove the old dikc and replace it with a new one. *Plug or conventional disk*: Remove the disk and insert a washer; then lay the disk to the seat for a snug fit.

  Step 4. Reassemble the valve.

  Step 5. Turn the water supply on and check for leaks and proper operation.

- Unknown malfunction in the valve.

  Step 1. Turn the water supply off; then disassemble the valve until the fault is found.

  Step 2. Replace the faulty parts and reassemble the valve.

  Step 3. Turn the water supply on and check for leaks and proper operation.

ANGLE VALVE

7-11. This valve is repaired the same as a globe valve. (See *paragraph 7-10* and *Figure 7-3*.)

CHECK VALVE

7-12. Use the procedures below to repair the swing and lift check valves.

NOTE: During disassembly, check all parts for wear and replace as needed.

Swing Check Valve

7-13. Use the following procedures and *Figure 7-4* to repair a swing check valve:

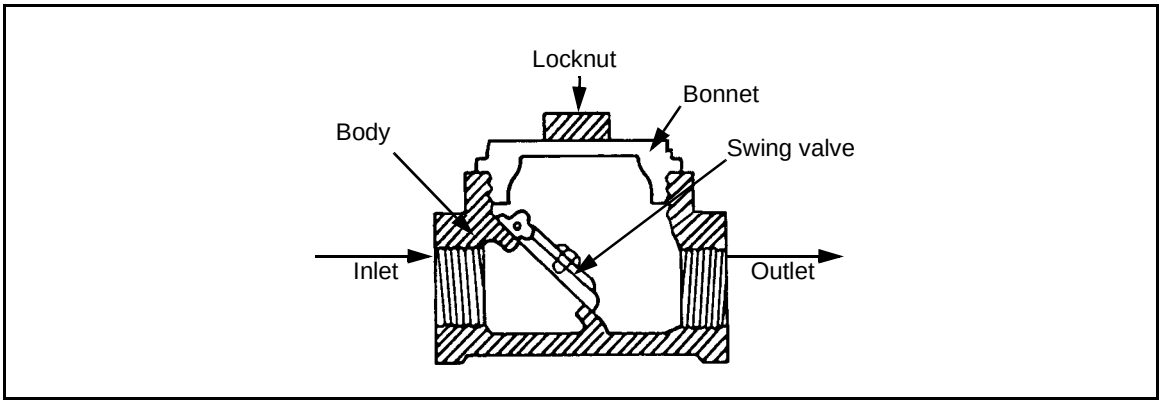

Figure 7-4. Swing Check Valve Repairs

- Loose disk locknut that is causing water backflow.

  Step 1. Turn the water supply off and remove the cap.

  Step 2. Tighten the locknut.

  Step 3. Replace the cap.

  Step 4. Turn the water supply on and check for leaks and proper operation.
- Hinge not closing completely.

  Step 1. Turn the water supply off and remove the cap.

  Step 2. Replace the hinge pin and/or hinge with a hinge pin.

  Step 3. Replace the cap.

  Step 4. Turn the water supply on and check for leaks and proper operation.
- Worn disk face that is causing a leak.

  Step 1. Turn the water supply off and remove the cap.

  Step 2. Remove the locknut and then the disk.

  Step 3. Attach a new disk to the hinge and tighten the locknut.

  Step 4. Replace the cap.

  Step 5. Turn the water supply on and check for leaks and proper operation.

Lift Check Valve

7-14. Use the following procedures and *Figure 7-5* to repair a lift check valve:

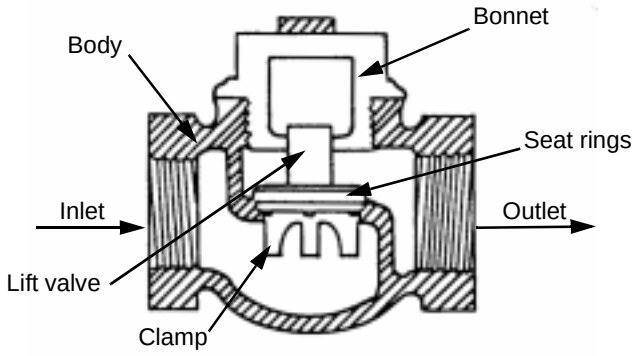

Figure 7-5. Lift Check Valve Repairs

NOTE: To avoid repair or replacement of the lift check valve, inspect it once a year.

- Inspect for wear, freedom of motion, and alignment.
- Inspect the clapper and body seat rings.
- Remove any dirt or foreign matter lodged in the valve.

- If the disk or body seat ring surfaces show signs of wear or corrosion, resurface or replace them.

SECTION II - FAUCETS

TYPES

7-15. All lavatories, sinks, bathtubs, and showers may have compression or noncompression faucets.

COMPRESSION FAUCET

7-16. A compression (or *washer*) faucet works by raising the washer on a seat for water flow and compressing the washer onto the seat to stop the water flow. A compression faucet can be a single faucet for hot and cold water or a combination faucet (*Figure 7-6*).

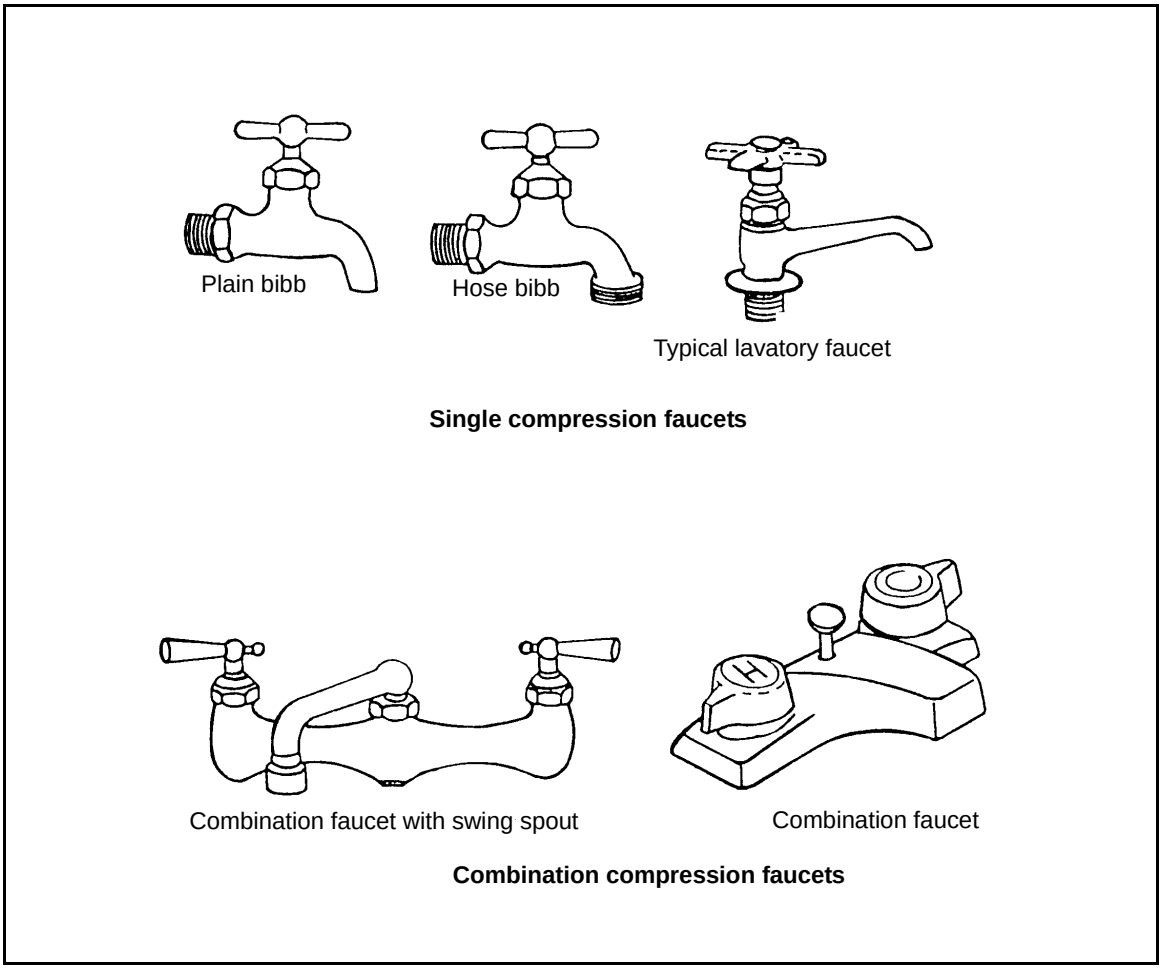

Figure 7-6. Compression Faucets

NONCOMPRESSION FAUCET

7-17. A noncompression faucet (commonly called *washerless*) has a single lever or knob that opens and closes ports for water flow and shutoff. Noncompression faucets come in three basic types: valve, ball, and cartridge (*Figure 7-7*). A single handle controls them.

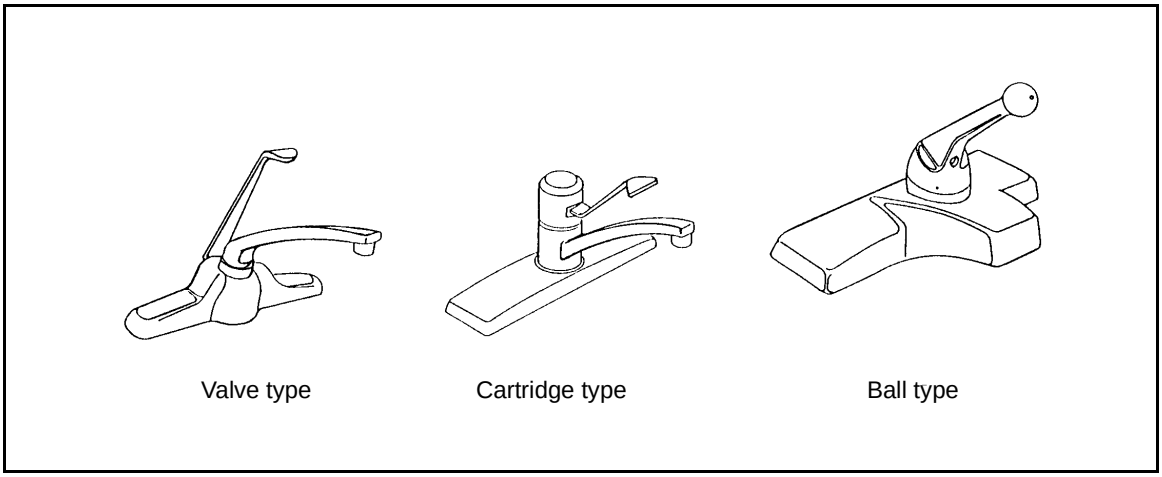

Figure 7-7. Noncompression Faucets

BATHTUB FAUCETS

7-18. A bathtub faucet may be a combination compression faucet or a single-knob, noncompression faucet (*Figure 7-8*). These faucets are mounted in the wall on the drain end of a bathtub, with or without a shower.

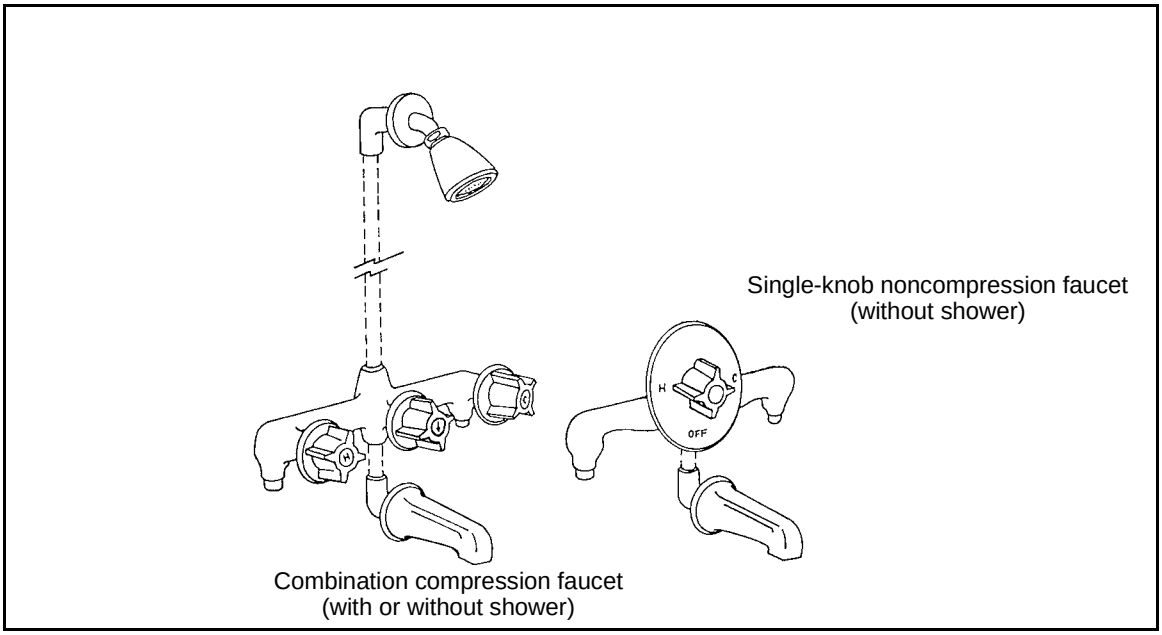

Figure 7-8. Bathtub Faucets

INSTALLATION

7-19. Use the following steps to install faucets (*Figure 7-9*):

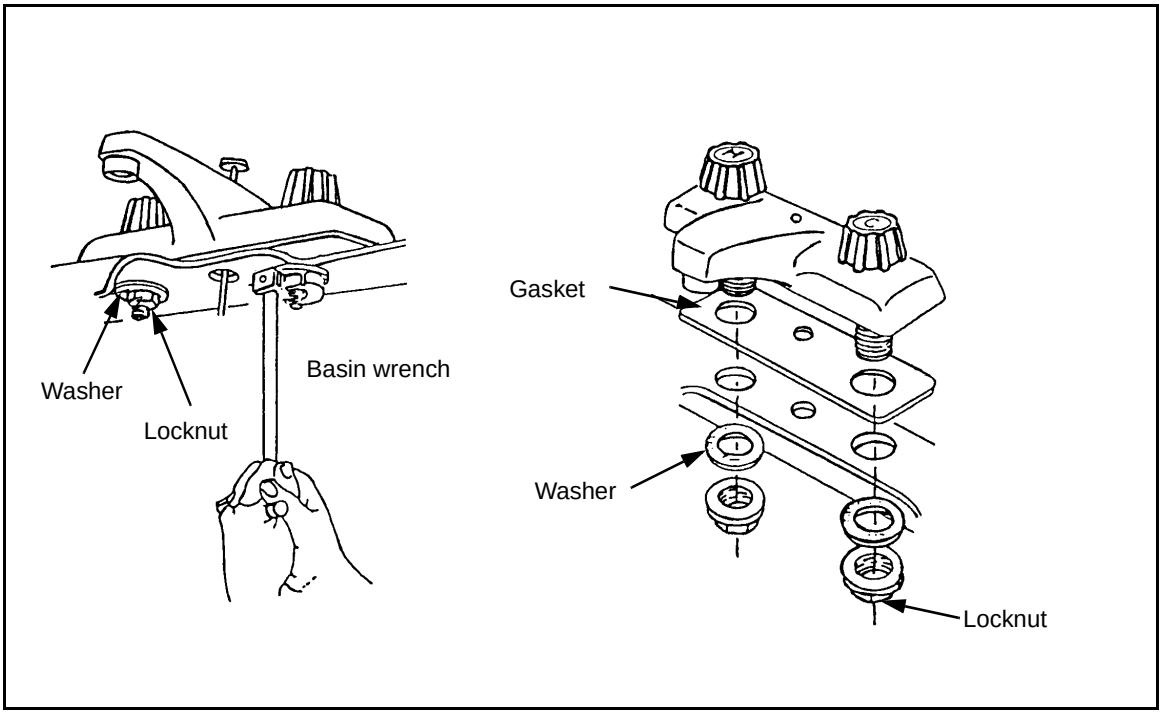

Figure 7-9. Faucet Installation

Step 1. Apply plumber's putty on the bottom of the faucet (either single or combination). If a gasket comes with the combination faucet, putty is not required.

Step 2. Place the faucet on the top rear of the bowl, with the threaded end through the holes.

Step 3. Place a washer and attach a locknut to each threaded end under the bowl.

Step 4. Tighten each locknut with a basin wrench.

Step 5. Wipe off any excess putty, if used, around the faucet.

REPAIRS

7-20. Before repairing any faucet, drain it by turning the water off at the fixture shutoff valve.

COMPRESSION FAUCETS

7-21. When repairing compression (or *washer*) faucets, always check the valve seat. If it is chipped or rough, reface it with a refacing tool or replace it.

Single Compression Faucets

7-22. Use the following procedures and *Figure 7-10*, to repair single compression faucets.

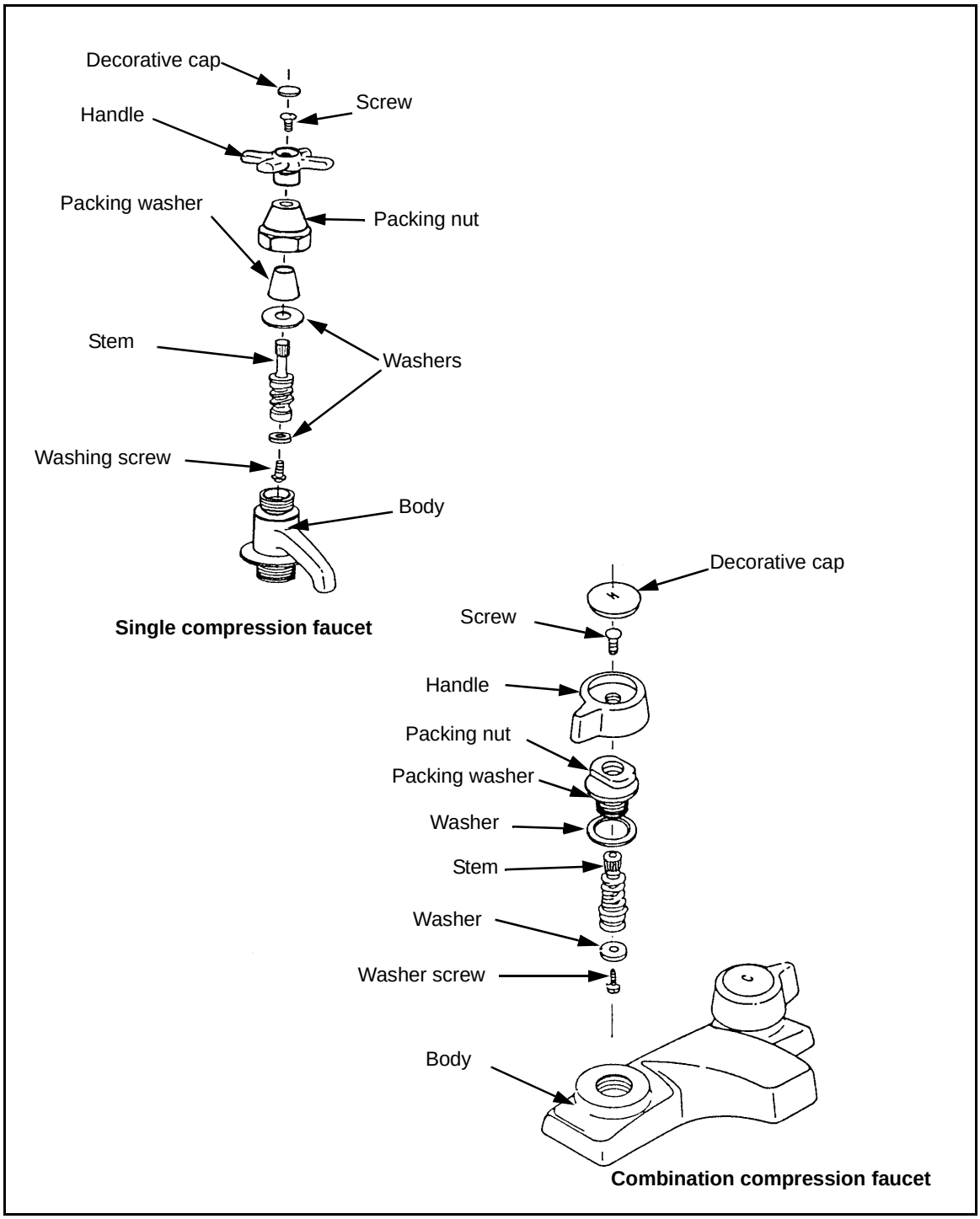

Figure 7-10. Compression Faucet Repairs

NOTE: During disassembly, check all parts for wear and replace as needed.

- Leak at the stem and the packing.

  Step 1. Turn the water supply off at the shutoff valve, and remove the cap, screw, and handle.

  Step 2. Remove the packing nut with a wrench, the old packing material, and the washer.

  Step 3. Place a new washer onto the stem's lower end, and reassemble all parts in order.

  Step 4. Turn the water supply on and check for leaks and proper operation.
- Leak at the spout.

  Step 1. Turn the water supply off at the shutoff valve. Remove the cap, screw, and handle.

  Step 2. Remove the packing nut with a wrench; then remove the stem from the body.

  Step 3. Remove the screw and washer from the bottom of the stem.

  Step 4. Place a new washer onto the bottom of the stem.

  Step 5. Check the valve seat inside the body. If it is chipped or rough, reface the seat with a refacing tool. If the seat is even, place the stem into the body. Replace if needed.

  Step 6. Reassemble all the parts in the proper order.

  Step 7. Turn the water supply on and check for leaks and proper operation.
- Leak at the base of the body.

  Step 1. Turn the water supply off at the shutoff valve. Remove the cap, screw, and handle.

  Step 2. Remove the packing nut with a wrench.

  Step 3. Remove the worn washer from the packing nut.

  Step 4. Slide a new washer into the packing nut for a snug fit.

  Step 5. Reassemble parts in the proper order.

  Step 6. Turn the water supply on and check for leaks and proper operation.

Combination Compression Faucets

7-23. Use the procedures in *paragraph 7-22* and *Figure 7-10* to repair combination compression faucets.

NONCOMPRESSION FAUCETS

7-24. The compression (or *washerless*) faucets—ball, valve, and cartridge—have different internal working parts (*Figure 7-11, page 7-12*).

NOTE: Before repairing a faucet, drain it by turning the water off at the fixture shutoff valve. During disassembly, check all parts for wear and replace as needed.

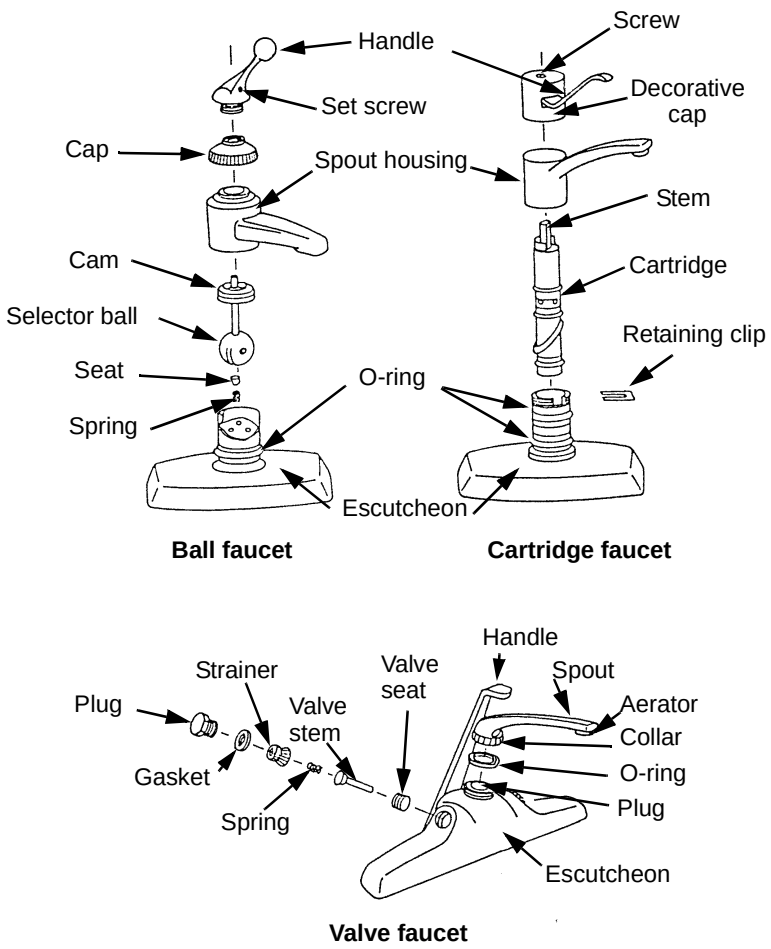

Figure 7-11. Noncompression Faucet Repairs

Ball Faucets

7-25. Leaks in this type of faucet can be caused by a corroded or gouged selector ball or by worn rubber valve seats (*Figure 7-11*).

Step 1. Remove the handle by loosening the set screw.

Step 2. Remove the cap and pull out the ball with the cam assembly.

Step 3. Use needle nose pliers to remove the two rubber valve seats and springs.

Step 4. Replace the rubber seats and/or the selector ball.

Step 5. Reassemble the faucet, ensuring that the slot in the ball aligns with the metal protection on the housing. Check for leaks.

Valve Faucets

7-26. Leaks in this type of faucet can be caused by a worn O-ring at the base of the spout or by other worn internal parts (*Figure 7-11*).

Step 1. Remove the spout and lift off the escutcheon. Remove the plugs on each side by turning them counterclockwise and pulling out the gasket, strainer, spring, valve stem, and valve seat.

Step 2. Remove the seat with a seat-removal tool or allen wrench.

Step 3. Reassemble the faucet and check for leaks.

Metal Cartridge Faucets

7-27. Leaks in these faucets are usually caused by two O-rings in the faucet body. Replacing the O-rings should eliminate the leaks (*Figure 7-11*).

Step 1. Remove the screw and push a screwdriver down the hole to keep the stem in place while removing the handle and cover.

Step 2. Unscrew the retaining nut and remove the spout. The body of the faucet is exposed to get to the O-rings.

Step 3. Replace the O-rings.

Step 4. Reassemble the faucet and check for leaks.

Ceramic-Disk Cartridge Faucet

7-28. In the ceramic disk, leaks are caused by a worn or corroded disk (*Figure 7-11*).

Step 1. Press the tile handle all the way back to remove the set screw.

Step 2. Remove the handle and the two set screws under the spout.

Step 3. Disengage the stopper mechanism under the lavatory and remove the ceramic cartridge, which is held by two brass screws.

Step 4. Replace the cartridge.

Step 5. Reassemble the stopper mechanism and the faucet. Check for leaks.

NOTE: If the faucet malfunctions due to corrosion or wear, use the manufacturer's instructions to make repairs.

BATHTUB AND SHOWER FAUCETS

7-29. These faucets function the same as compression and noncompression faucets on sinks and lavatories. Although tub and shower faucets are styled differently than sink and lavatory faucets, repair methods are similar. *Figures 7-12, page 7-14*, and *7-13, page 7-15*, show breakouts of the internal parts of

bathtub and shower compression and noncompression faucets. Bathub faucet malfunctions and repairs are similar to lavatory faucets.

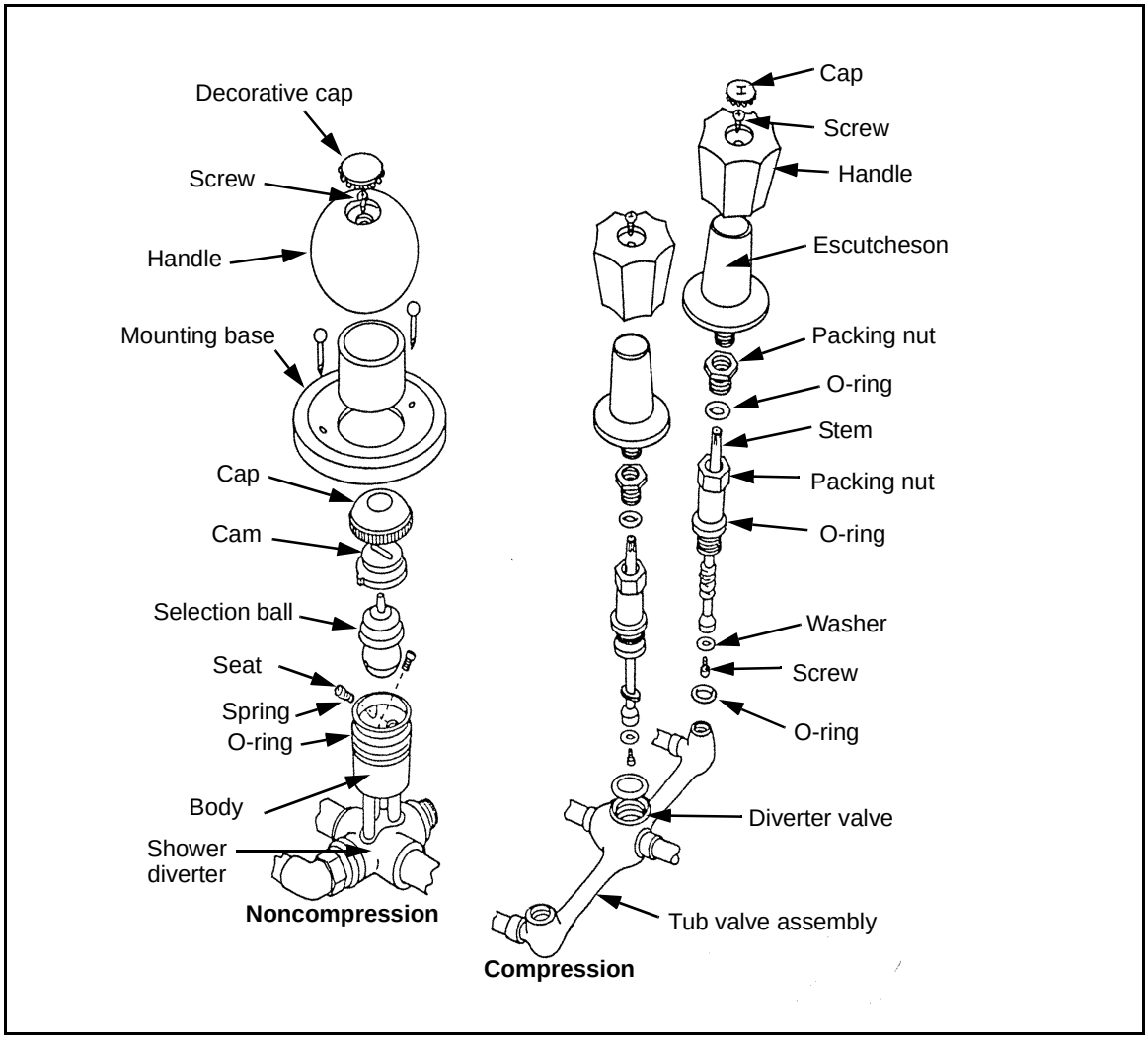

Figure 7-12. Bathtub and Shower Faucet Breakout

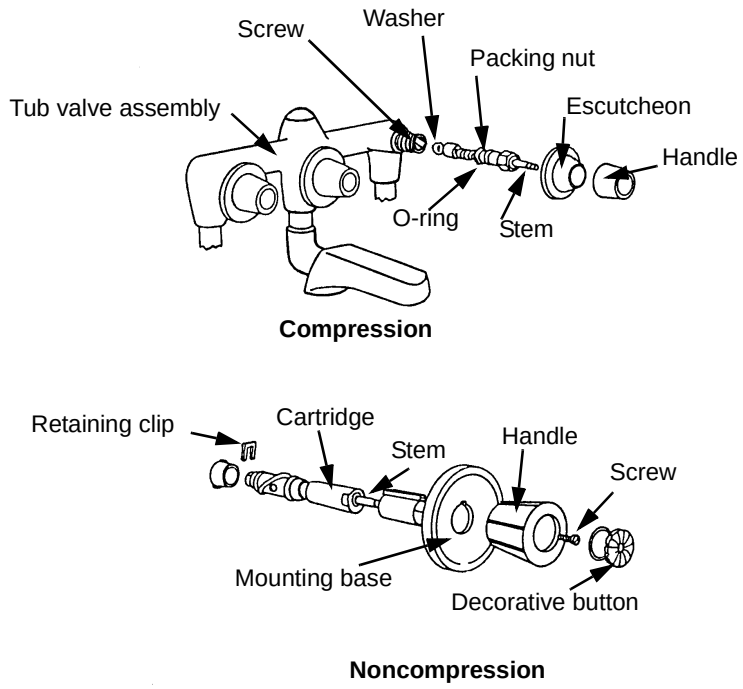

Figure 7-13. Bathtub Faucet Breakout

Chapter 8

Stacks and Branches

Stacks are the vertical main pipes in a plumbing system. They carry wastes to the house drain. Branches are the pipes that carry the discharge from the fixtures to the stacks. A soil branch carries water closet waste; a waste branch carries wastes from all other fixtures. Most buildings do not have separate soil and waste stacks, so a single stack, known as the soil-and-waste stack or simply the soil stack (or stack), carries both soil and waste.

PIPE SELECTION

8-1. Stacks and branches may be made of cast iron, iron (threaded), copper, or plastic pipe. Soil stacks are usually made of hubless cast iron with neoprene sleeve gaskets or plastic pipe. Copper pipe is also used for soil stacks because it is easily installed. Branches are usually made of either threaded galvanized-steel pipe with recessed drainage fittings, copper pipe (DWV), or plastic pipe (ABS).

PIPE SIZE

STACK

8-2. The stack is sized in the same way as the building and house drain. Determine the total DFUs using *Table 1-6, page 1-18*. Then, apply this number to *Table 8-1* to find the proper stack size. Referring to the example in *paragraph 1-73, page 1-16*, the 45 DFUs would require a 3-inch stack for cast-iron, steel, or plastic pipe and a 2-inch stack for copper pipe.

Table 8-1. Maximum Fixture Units Per Stack

Size of Pipe (in inches)	Fixture Units Per Stack
3	60
4	500
5	1,100
6	1,900
8	3,600
10	5,600
12	8,400

BRANCHES

Water Closets

8-3. A water closet has no individual waste pipe. Usually, it is connected directly into the stack with a short branch attached to a closet bend. The closet bend is 3 or 4 inches in diameter if it is cast iron, steel, or plastic and 3 inches if copper.

Lavatories

8-4. Because lavatories are used for washing, stoppages can occur in the waste pipe. Improve drainage by using a minimum number of fittings and no long, horizontal runs. The minimum pipe size for lavatory waste is 1 1/4 inches. If other than copper pipe is used, 1 1/2 inches is more satisfactory.

Urinals

8-5. Urinals present a particular problem because foreign matter is often thrown into them. Therefore, a urinal should be equipped with an effective strainer. The size of the waste pipe should be 2 inches if it is cast iron, steel, or plastic and 1 1/2 inches if copper.

Showers

8-6. The diameter of the waste pipe for a single shower is 2 inches for cast iron, steel, or plastic and 1 1/2 inches for copper. To handle the flow during peak use, a shower room requires a waste pipe of 3 or 4 inches in diameter. Stoppages seldom occur in shower waste pipes.

Sinks

8-7. **Kitchen Sink.** A kitchen sink needs a 1 1/2-inch waste pipe because of food wastes flushed into the sink. The waste pipe must be short and as free from offset as possible.

8-8. **Slop Sink.** The two styles of slop (utility) sinks are trap-to-floor (stand trap) and trap-to-wall. Each is used for disposing of wash water, filling mop buckets, and washing out mops. The trap-to-floor sink requires a 3-inch waste pipe. The trap-to-wall sink requires a 2-inch waste pipe. In both types, copper pipe may be a size smaller.

8-9. **Scullery Sink.** Scullery sinks are for general kitchen use. A 2-inch waste pipe should be used because a large amount of grease is passed into the pipe through a grease trap.

Drinking Fountains

8-10. Since drinking fountains carry clear water waste, a 1 1/4-inch pipe is ample.

INSTALLATION

8-11. The stack is one continuous pipe run that goes from the house drain up through the roof. However, certain sections of the run are named for their function, as shown in *Figure 8-1*.

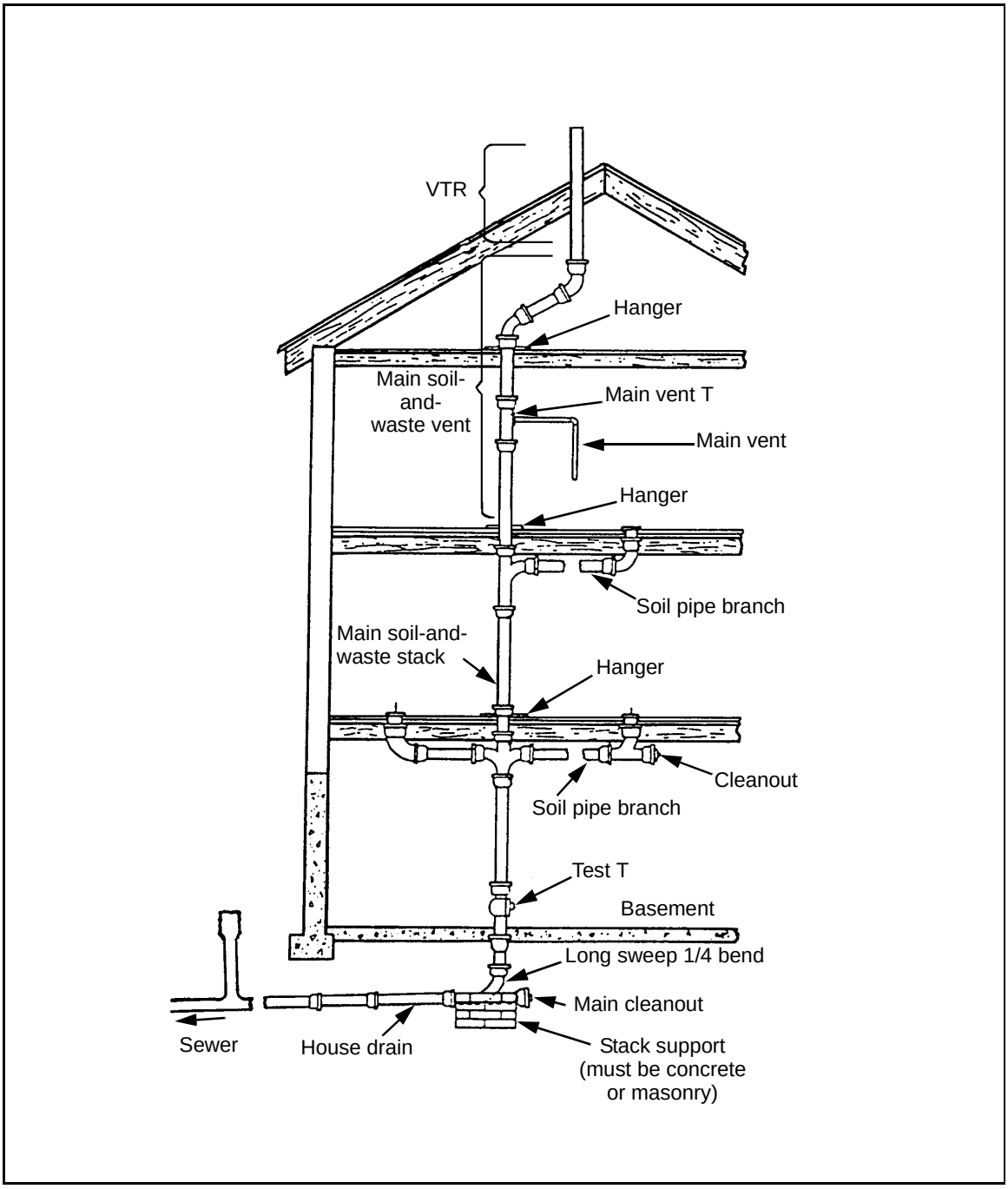

Figure 8-1. Stack and Branches

STACK

8-12. Installation of the stack requires the following connections:

- From the house drain to the first branch takeoff—

Step 1. Connect the stack to the house drain using a long sweep 1/4 bend to keep pressure to a minimum.

Step 2. Connect a test T to the bend with a piece of pipe long enough to raise the side opening of the test T 12 inches above the finished floor.

Step 3. Add other pipe until the desired height of the first branch takeoff is reached.

Step 4. Install a sanitary T or combination Y and 1/8-inch bend at this point.

- To the main soil-and-waste vent. The main soil-and-waste vent extends above the top branch fitting, which runs through the roof (without connecting it to the main vent). Usually this vent is connected to the main vent.
- Vent through the roof (VTR). After the main vent T is installed, run the main soil-and-waste vent through the roof to form the VTR. The VTR pipe must be as large or larger than the stack and must extend a minimum of 12 inches above the roof. It can be either straight from the stack or offset. To make the opening in the roof watertight, use roof flashing. In areas of below-freezing temperatures, frost may close the vent at its roof outlet. To prevent this, you may use a pipe that is a size or two larger than the stack. Other methods are insulation, high flashing, and a frost-proof cover over the pipe.

MAIN VENT T

8-13. The main vent T should be placed in the stack at least 6 inches above the flood level of the highest fixture in the installation. It joins the main vent to the main soil-and-waste vent.

BRANCHES

Slope

8-14. Horizontal branches are run from the takeoffs on the soil stack to the various fixtures. Branches should slope 1/4 inch per foot from the fixture to the stack. A convenient tool for checking slope is a carpenter's level.

Cleanouts

8-15. Waste lines should have as many cleanouts as needed to clear stoppages and simplify repairs. Install a cleanout for every change of direction and for each horizontal line 2 feet long or longer. The cleanouts should be the same diameter as the waste line.

Sizes

8-16. The number of drainage fixture units determines the branch sizes. No branch may be larger than the soil (waste) stack.

STACK AND BRANCH SUPPORTS

8-17. Stacks and branches should be supported so that the weight of the pipe will not bear on joints, since they are the weakest points in the line. Cast-iron soil pipe stacks and branches should be supported at all joints. The bend at the base of the stack should rest on a concrete or masonry support, as shown in *Figure 8-1, page 8-3*. The (vertical) stack may be supported on each floor with special hangers, by placing wood strips under two sides of the hub or by wrapping strap iron around the pipe at the hub and suspending it from joists. Sturdy iron-ring hangers must support horizontal cast-iron runs of piping. The support should be as close to the caulked joint as possible. Support threaded, galvanized-iron/steel waste pipe, plastic pipe, and copper-tubing drain and vent lines at each floor level.

TESTING

8-18. After installing the waste system, test it to see that all joints are leakproof.

GALVANIZED-IRON/STEEL, COPPER, AND PLASTIC PIPING

8-19. To test these types of piping, choose either the water or the air test.

Water Test

8-20. Use the following steps to do a water test:

Step 1. Seal the branches and vent lines and place a test plug in the test T.

Step 2. Fill the system with water and check for a drop in the water level.

Step 3. Check each joint for leaks if the water level drops noticeably. The test is satisfactory if the water level does not fall more than 4 inches in a 30-minute period.

Step 4. Make leaking joints watertight and replace any defective material.

Air Test

8-21. A special plug, through which air is pumped into the system, is required for this test. In a cast-iron soil pipe system, close all openings after you have drained the water. Use the following steps to do an air test:

Step 1. Apply an air pressure of about 5 psi (measured by a gauge).

Step 2. A drop in the mercury column on the gauge shows a leaky joint. In a satisfactory test, the line should hold 5 psi for 15 minutes.

Step 3. Listen for the sound of escaping air to help locate leaks. If no sound is heard and pressure is falling, apply a soap solution to the joints in the area of the leak. If there is a leak, bubbles will form.

OTHER TYPES OF PIPING

8-22. Before doing a water or an air test do the following 12-hour test:

Step 1. Seal all branches and vent lines. Place a ratchet test plug in the test T *(Figure 8-2)* at the base of the stack.

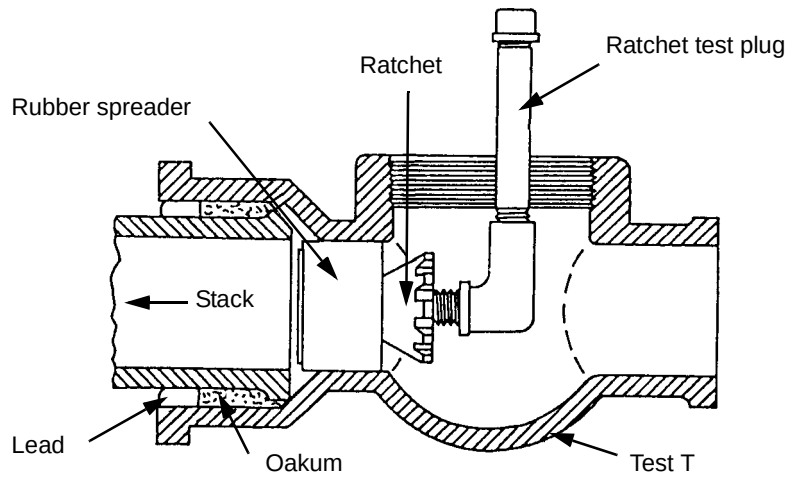

Figure 8-2. Test T With Plug Inserted

Step 2. Fill the system with water from the top of the main soil-and-waste vent, and keep it filled for at least 12 hours to allow the oakum in the joints to swell and form a watertight seal.

8-23. After completing this 12-hour test, perform either a water test or an air test.

Chapter 9

Traps and Vents

A vent is a pipe or opening that brings outside air into the plumbing system and equalizes the pressure on both sides of a trap to prevent trap seal loss. A trap provides a water seal that keeps sewer gases from entering a building through a waste outlet.

SECTION I - TRAPS

9-1. A trap is a fitting or device that, when properly vented, provides a water seal to prevent the discharge of sewer gases without affecting the flow of sanitary drainage through it.

USE

9-2. Traps are used on some fixtures and floor drains inside buildings. The P-trap is used in a partition to connect a drain to a waste branch. A running trap is used in a building's drain line when the local plumbing code requires that the building drain be trapped.

TYPES

9-3. The types of water-seal traps are a P-trap, an S-trap, a 3/4-degree S-trap, and a drum trap (*Figure 9-1, page 9-2*). The most common type is a P-trap. (Refer to cast-iron traps shown in *Figure 6-10, page 6-11*.)

P-TRAP

9-4. This trap is the most widely used for fixtures. It can be either plastic or chromed, tubular brass. The most common diameter sizes are 1 1/4 and 1 1/2 inches. Most P-traps have a cleanout plug, since the traps are subject to stoppage.

DRUM TRAP

9-5. This trap is used mostly for bathtubs, but it can also be used in kitchen sinks. Drum traps are designed in several styles, depending on the manufacturer and the material used. This trap has the advantage of containing a larger volume of water and discharging a greater volume of water than a P-trap. A drum trap is 3 or 4 inches in diameter with the trap screw one size smaller than the diameter.

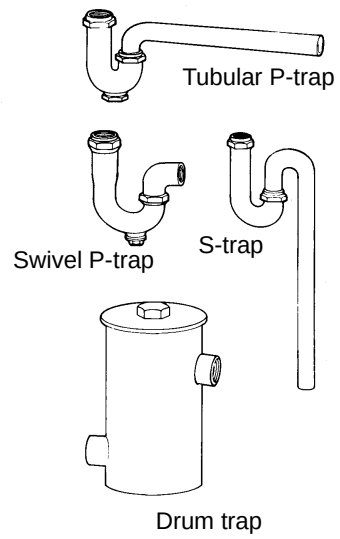

Figure 9-1. Traps

S-TRAP AND 3/4-INCH S-TRAP

9-6. The full S-trap and 3/4-degree S-trap are not used in modern plumbing. If an S-trap or 3/4-inch S-trap is in place, remove it and replace it with a P-trap.

TRAP SEAL LOSS

9-7. The trap seal (*Figure 9-2*) is a liquid content in the U-shaped part of the trap. The most common trap seal has a depth of 2 inches between the weir and the top dip. The deep-seal trap has a depth of 4 inches. If the trap's water seal is lost, dangerous sewer gases can enter the building through the fixture.

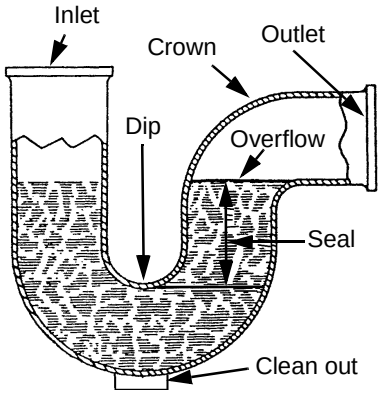

Figure 9-2. Trap Seal

INADEQUATE VENTING

9-8. Trap seal loss usually results from inadequate venting of the trap. Venting a plumbing system allows the atmosphere to enter the discharge side of a trap, preventing loss of water seal by siphonage. At sea level, atmospheric pressure is about 14.7 psi. This pressure varies only slightly on the fixture side of the water seal in a trap. Any difference between this pressure and the pressure on the discharge side forces the water seal in the direction of less pressure. Venting the discharge side of the trap to the atmosphere tends to equalize these pressures.

DIRECT SIPHONAGE

9-9. Direct siphonage, or self-siphonage, as shown in *Figure 9-3,* occurs in unvented traps that serve oval-bottom fixtures such as lavatories. Such fixtures discharge their contents rapidly and do not have the final small trickle of water needed to reseal the trap. When the plug is withdrawn, the water flows out fast and completely fills the waste pipe. The water displaces the air that normally fills the waste pipe, lowering the atmospheric pressure on the discharge side of the trap. Atmospheric pressure on the fixture side forces the water through the trap, and the seal is lost.

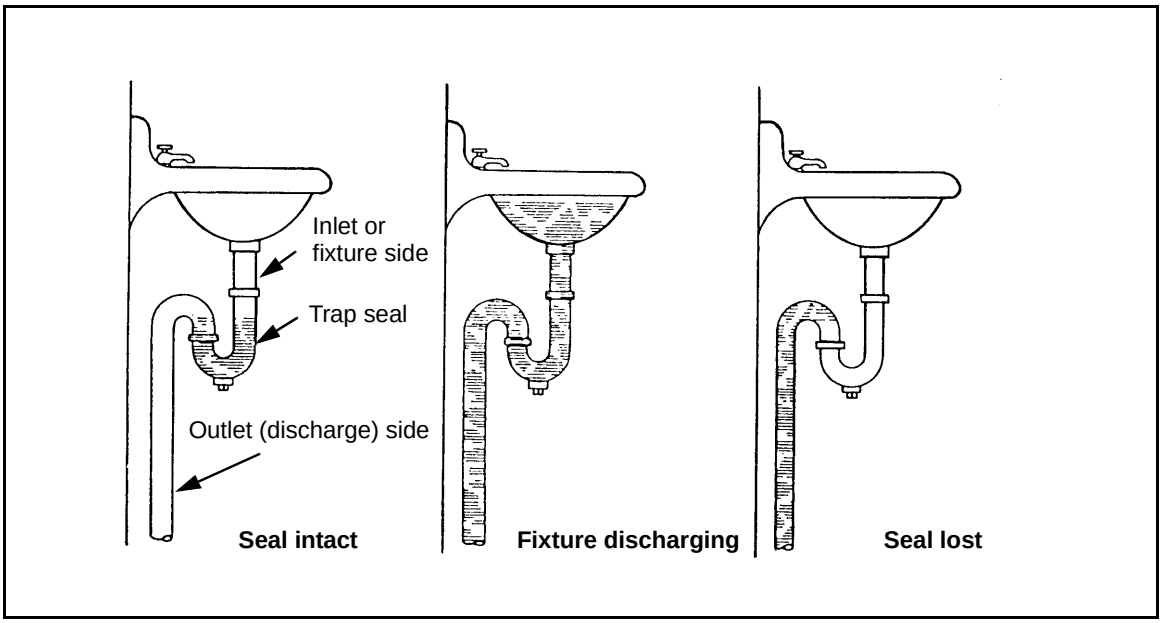

Figure 9-3. Direct Siphonage

9-10. In a lavatory with a flat bottom, the last few ounces of water flowing into the trap come in a slow trickle, resealing the trap. Showers, laundry tubs, sinks, and bathtubs rarely lose trap seal by direct siphonage.

9-11. Fixture manufacturers have tried to combat siphonage by reducing the diameter of the lavatory outlet to 1 1/4 inches and recommending that it be connected to a 1 1/2-inch waste pipe. In such a connection, the water volume

does not completely fill the waste pipe, and the air in the pipe maintains atmospheric pressure on the outlet side of the trap.

INDIRECT OR MOMENTUM SIPHONAGE

9-12. Indirect siphonage (*Figure 9-4*) is caused by a large discharge of water from a fixture installed one or more floors above the affected fixture. This large discharge tends to form a slug in the stack. As this slug passes the takeoff of the fixture below it, air is pulled out of the waste line on the lower fixture. This reduces the pressure on the discharge side of the trap. There is no reseal until there is a discharge from the lower fixture.

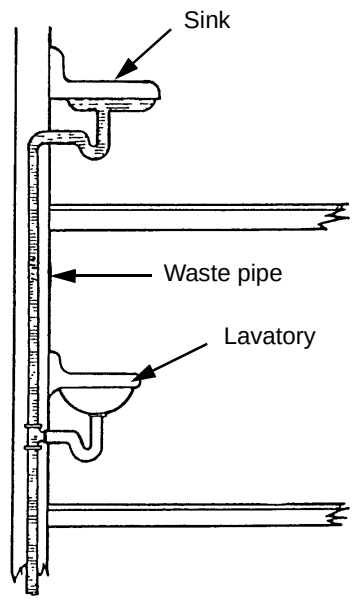

Figure 9-4. Indirect Siphonage

BACK PRESSURE

9-13. Back pressure within a sanitary drainage system is caused by simultaneous fixture use that overtaxes the plumbing system, causing a positive pressure that affects a trap's water seal. A large flow may completely fill the pipe, causing the compressed atmospheric gases to offer resistance because they cannot slip past the water flow and exhaust at a roof terminal. As the water falls, the pressure increases and compresses the air, and the trap seal blows out of the fixture (*Figure 9-5*).

CAPILLARY ACTION

9-14. A foreign object lodged in the trap causes loss of trap seal by capillary action. The object acts as a wick and carries the water from the trap over the

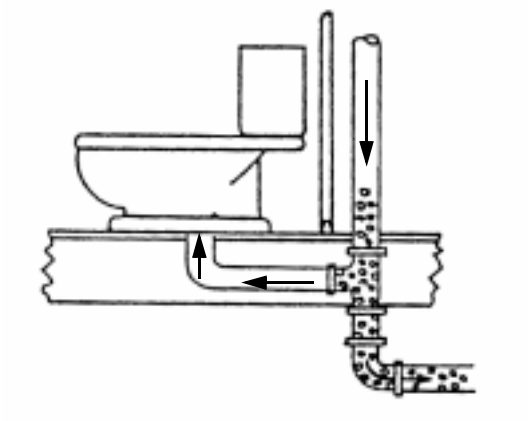

Figure 9-5. Trap Seal Loss by Back Pressure

outlet side into the waste pipe until the seal is ineffective (*Figure 9-6*). Rags, string, lint, and hair commonly cause this problem.

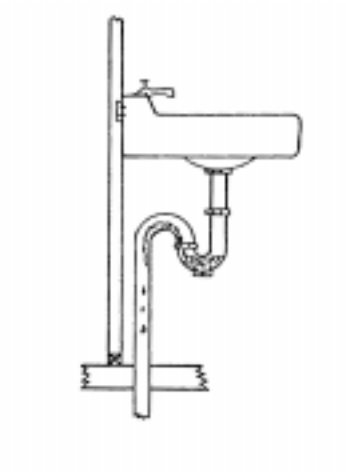

Figure 9-6. Trap Seal Loss by Capillary Action

EVAPORATION

9-15. Loss of trap seal from evaporation only occurs when a fixture is not used for a long time. The rate of evaporation in a trap depends on the atmosphere's humidity and temperature. A trap in a warm, dry place will lose water seal by evaporation more rapidly than one in a cool, damp place.

Ventilation does not solve the problem. The use of a deep-seal trap is the best solution. One disadvantage is that solid wastes collect in the bottom of the trap and clog the pipe.

SECTION II - VENTS

9-16. The main vent is a vertical pipe connecting fixture vents to the main soil-and-waste vent or directly to the atmosphere. In a building of three or more stories, the main vent should be connected to the bottom of the soil stack to prevent pressure on the lower branches.

INSTALLATION

9-17. A typical stack and vent installation is shown in *Figure 9-7*. Usually the main vent is within several feet of (parallel to) the main soil-and-waste stack, but it may be offset where there are space problems. Branches from the main vent are used in installations.

SINGLE-FIXTURE VENT

9-18. The individual vent (also referred to as a *back vent* or *continuous vent*) shown in *Figure 9-8, page 9-8,* is the most common. This vent can be adapted to all fixtures. It prevents both direct and indirect siphonage. Assuming a drop of 1/4 inch per foot, the maximum distances between the fixture trap and the vent are listed in *Table 9-1, page 9-8*.

BATTERY OF FIXTURE VENTS

9-19. Batteries of two or more fixtures can be individually vented (*Figure 9-9, page 9-8*). Each vent ties into a vent pipeline (branch) connected to the main vent.

COMMON VENT

9-20. Fixtures mounted side by side or back to back on a wall are common-vented. In the common vent, both fixtures discharge into a double sanitary T with deflectors (*Figure 9-10, page 9-9*). This venting system usually is found in buildings where two bathrooms have a common partition.

CIRCUIT VENT

9-21. The circuit vent *(Figure 9-11, page 9-9)* extends from the main vent to connections on the horizontal soil or waste branch pipe between the fixture connections. This vent is used in buildings having a battery of two or more fixtures, such as lavatories. A maximum of eight fixtures are permitted on any one circuit vent. The circuit vent is usually installed between the next to the last and the last fixture on the line. Since some fixtures discharge their waste through a part of the pipe that acts as a vent for other fixtures, the vent may become clogged. Reduce clogging by connecting the vent into the top of the branch rather than its side. Water and waste from the last fixture scours the vents of the other fixtures.

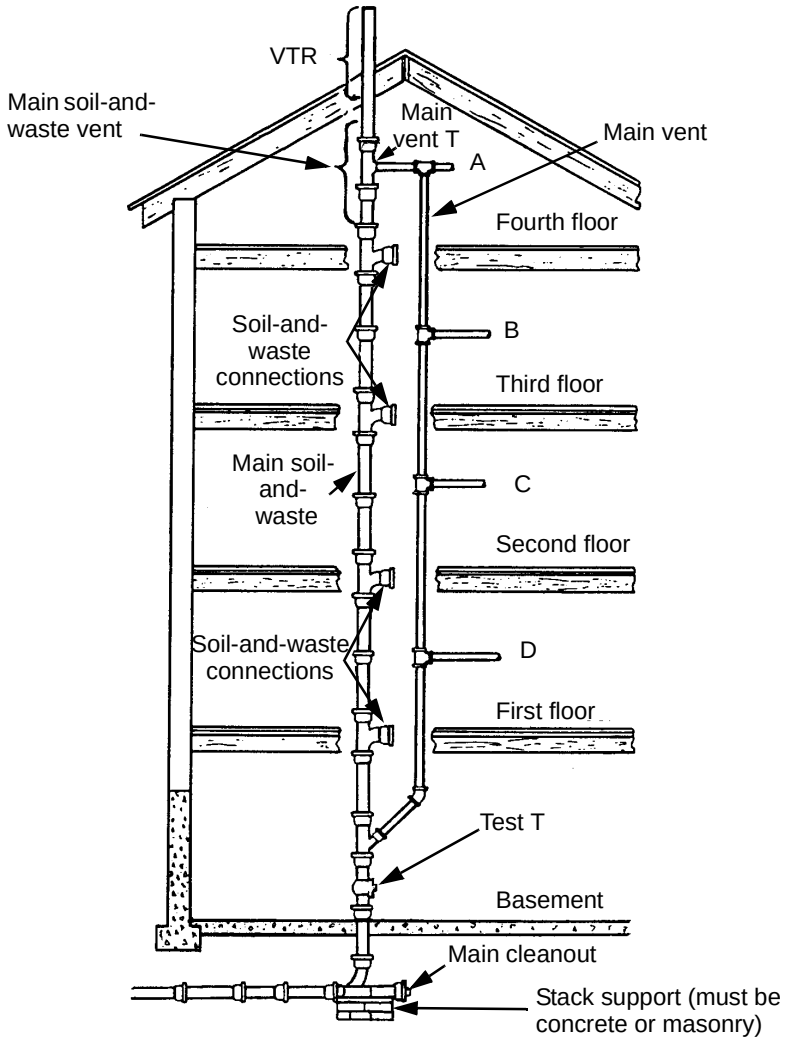

NOTE: A, B, C, and D are branches (of the main vent) that serve as fixture trap vent terminals.

Figure 9-7. Stack and Vent Installation

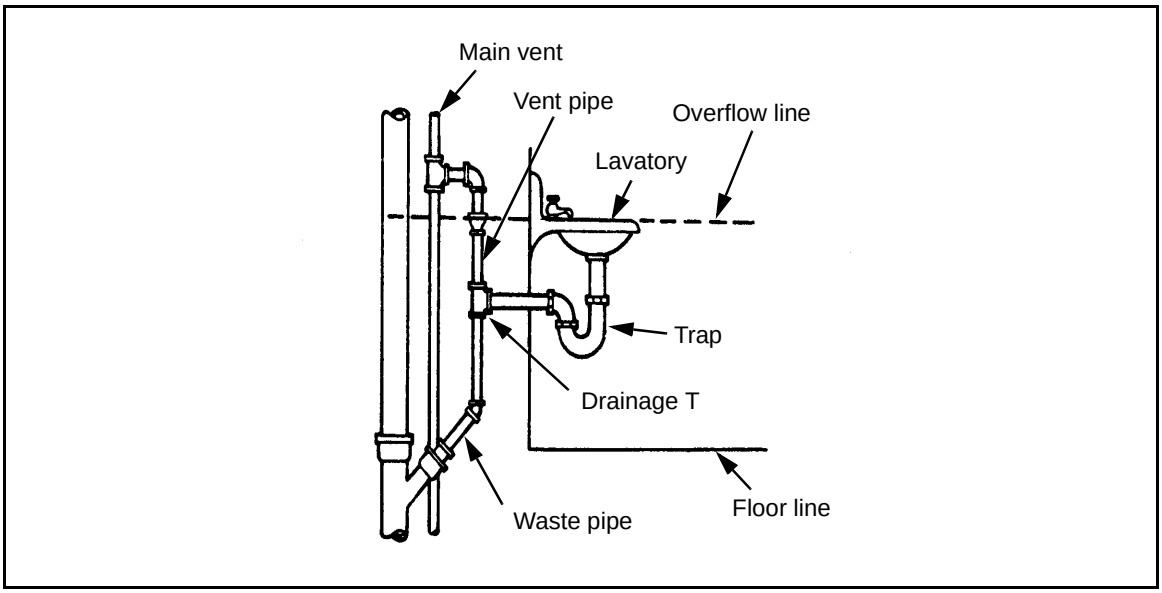

Figure 9-8. Single-Fixture Vent

Table 9-1. Determining the Pipe Size From the Fixture to the Vent

Maximum Distance From the Fixture Trap to the Vent	Size of the Fixture Drain (in Inches)
2' 6"	1 1/4
3' 6"	1 1/2
5'	2
6'	3
10'	4

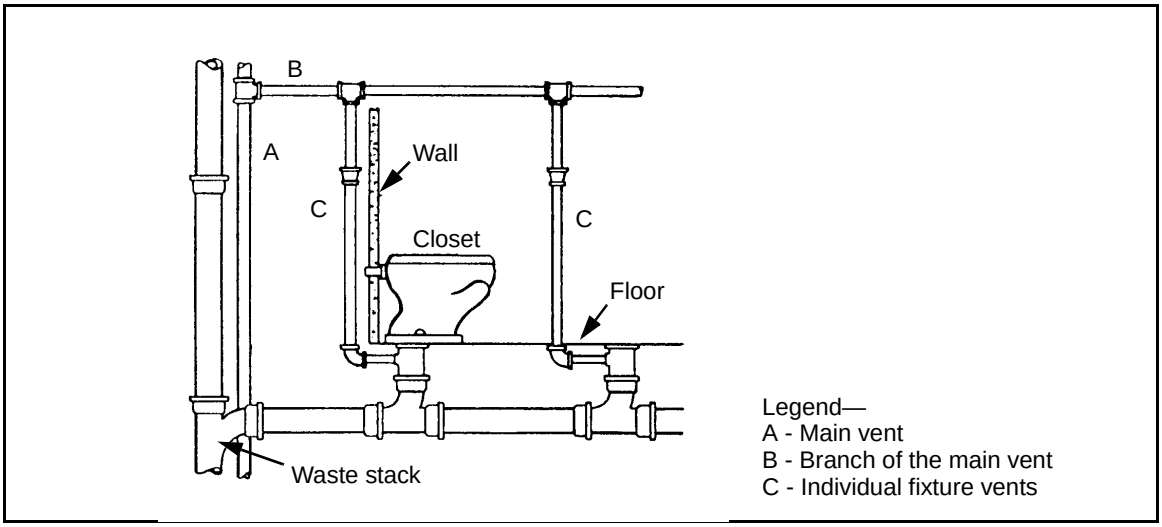

Figure 9-9. Row of Fixture Vents

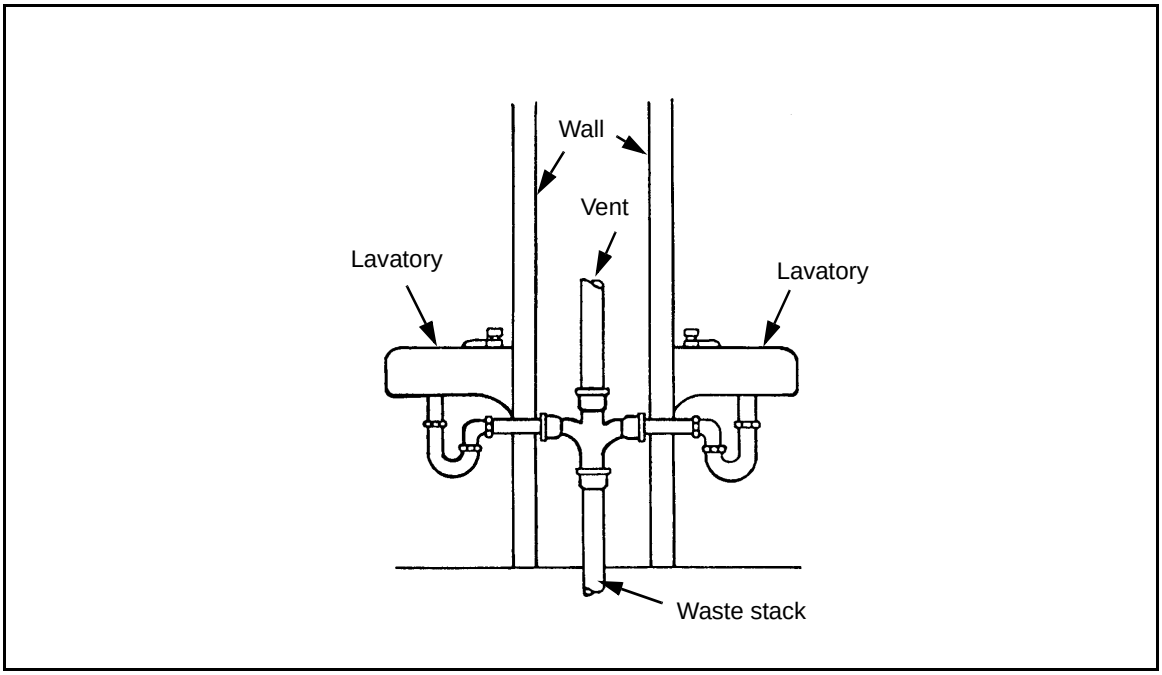

Figure 9-10. Common-Vented Fixtures

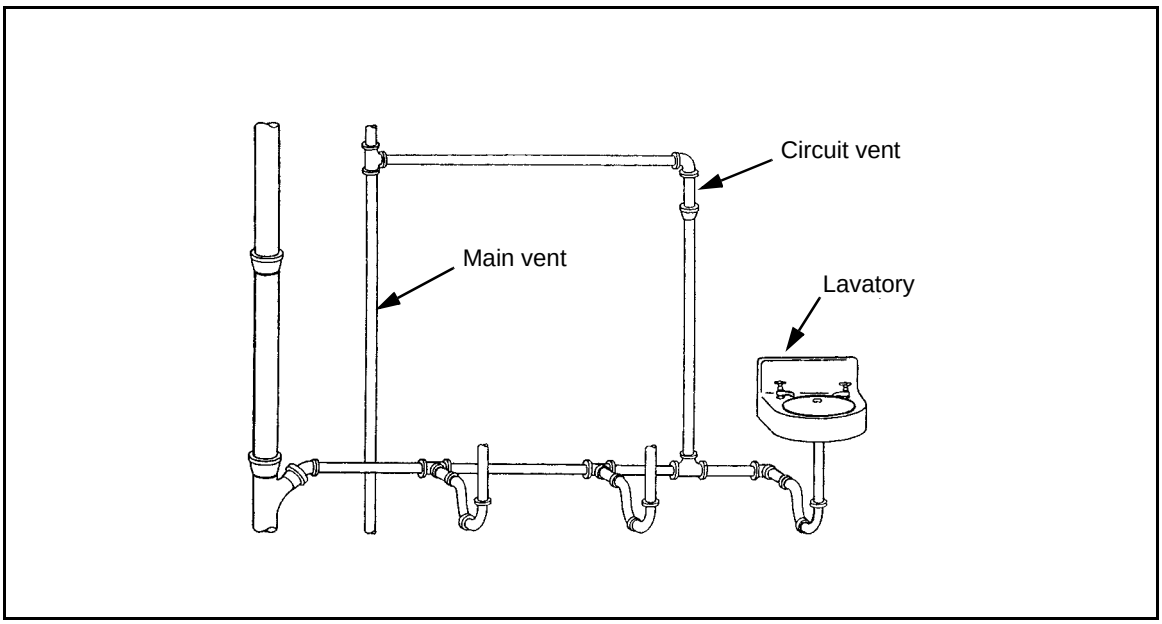

Figure 9-11. Circuit Venting With Lavatories

WET VENT

9-22. A wet vent *(Figure 9-12, page 9-10)* is part of a vent line through which liquid wastes flow from another fixture that has an individual vent. It is used most commonly on a small group of bathroom fixtures. A disadvantage is that the vent tends to become fouled with waste material, which reduces its

diameter or causes a stoppage. The size of the pipe for a wet vent must be large enough to take care of the fixtures based on the total DFUs.

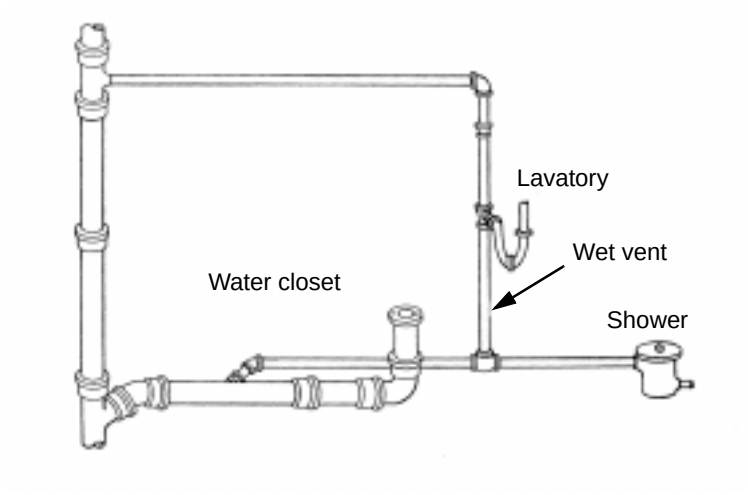

Figure 9-12. Group of Wet-Vent Fixtures

SIZES

9-23. Never use a pipe smaller than 2 inches in diameter for ventilation.

MAIN VENT

9-24. To determine the correct pipe size for the main vent, use *Table 9-2* along with the number of DFUs, the length of the vent, and the diameter of the soil-and-waste stack. The main vent must be at least one-half the size of the stack, and the main soil-and-waste vent must be at least as large as the stack.

INDIVIDUAL FIXTURE VENT

9-25. *Table 9-3* lists the recommended sizes (in diameter) for individual, branch, circuit, and stack vents.

9-26. Determine what size of main vent (diameter) you would need for the following: a soil-and-waste stack with a diameter of 3 inches, DFUs of 59, and a 200-foot vent length. Use the following steps with *Table 9-2*:

Step 1. Read down the first column to 3.

Step 2. Find 30 in the second column.

Step 3. Go to the next higher number, 60 (since there are 59 DFUs).

Step 4. Read across to the figure that is closest to 200, and select 240.

Step 5. Read up from 240. The main vent would be 2 1/2 inches in diameter.

Table 9-2. Size and Length of the Main Vents

Diameter of Soil-and-Waste Stack (in Inches)	Number of DFUs to be Connected	Maximum Permissible Developed Length of Vent (in Feet)							
		Diameter of Vent (in inches)							
		1 1/2	2	2 1/2	3	4	5	6	8
1 1/2	8	150							
2	12	75	310						
2	24	70	300						
2 1/2	42	35	140	450					
3	30	20	80	260	650				
3	60	18	75	240	600				
4	100		35	100	260	1,100			
4	250		30	95	240	1,000			
4	500		22	70	180	750			
5	550			28	70	320	1,000		
5	1,100			20	50	240	750		
6	950				20	95	240	1,000	
6	1,900				18	70	180	750	
8	1,800					30	80	350	1,100
8	3,600					25	60	250	800
10	2,800						30	80	350
10	5,600						25	60	250

Table 9-3. Size of Individual, Branch, Circuit, and Stack Vents

Fixture	Minimum Size of Vent (in inches)
Lavatory	1 1/4
Drinking fountain	1 1/4
Sink	1 1/2
Shower	1 1/2
Bathtub	1 1 /2
Laundry tub	1 1/2
Slop sink	1 1/2
Water closet	2
Urinal	1 1/2

Chapter 10

Steam, Gas, and Air Piping

Steam piping is used mainly for heating systems. Gas and air piping is used for many purposes, but mainly for boiler rooms and heating plants. Steam piping is not interchangeable with gas and air piping.

STEAM PIPING

10-1. Steam is used mainly for space heating, cooking, and laundering. Steam is produced in a boiler and passes through steam headers and branch takeoffs to the steam appliances. Most steam pipes are wrought-iron or steel with threaded joints. Large, high-pressure, high-temperature systems use bolted-flange joints (see *Figure 6-24, page 6-22*).

PIPE SIZE

10-2. Do not use a supply main that is less than 2 inches in diameter. The diameter of the far end of the supply main should be no less than one half the diameter at the largest part. Where supply mains are smaller than one half, use eccentric couplings, level with the bottom of the pipes.

INSTALLATION

Piping

10-3. **Pipe Expansion.** Install steam piping systems with the atmospheric temperature varying from 0 degrees Fahrenheit to 100 degrees Fahrenheit, depending on the locality and the season of the year. When steam passes through a pipe, the temperature of the pipe becomes the same temperature as the steam. This temperature change causes the pipe to expand and increase in length. For a temperature change of 900 degrees Fahrenheit, steel pipe would expand about 8 1/2 inches per 100 feet of length. To prevent undue stress on the pipe and transfer of this stress to appliances, insert a flexible connection that will expand and contract with the pipe. Install bends and loops in the pipe to absorb the forces set up by expansion and contraction.

10-4. **Pitch of Pipes.** As steam passes through the piping to the appliances that it serves, it cools and condenses to water. This water must be returned to the boiler where it is changed back to steam. When installing steam systems, ensure that all pipes are properly pitched (sloped) to allow condensation to drain. Slope pipes toward the boiler to prevent water from collecting in the pockets in the return condensate steam lines.

10-5. The pitch of the main should not be less than 1/4 inch per 10 feet. The pitch of horizontal run outs to risers and radiators should not be less than 1/2

inch per foot. Where this pitch is not possible, run outs over 8 feet long should be one size larger than otherwise needed.

NOTE: Faulty piping installation causes most snapping, cracking, and rattling noises in steam-distribution systems or return systems. Live steam in contact with water or moisture in the pockets causes water hammer. This condition may occur in the distribution system because of high water levels in the boilers. It occurs more often in return-condensation steam lines when steam is leaking or blowing directly through traps into these lines.

Valves

10-6. The gate valve is the most satisfactory valve to use for steam piping. When open, it allows ready passage of steam; when closed, it forms a leakproof shutoff. Globe valves should not be used with fiber disk washers because fiber disk washers wear rapidly under conditions of high pressure and temperature.

Insulation

10-7. Quality pipe insulation should be used for piping between the boiler and the appliance. It may be a preformed type, that is strapped around the piping or the cement type that is mixed with water and molded around the pipe by hand.

SAFETY

10-8. Before attempting maintenance—

- Shut off all the steam lines and remove the pressure.
- Allow lines to cool before working on them.
- Insulate all steam lines passing within 6 inches of combustible materials.
- Insulate exposed steam lines that are within easy reach of personnel.
- Equip all steam boilers with proper pressure- and temperature-relief valves.

DANGER
Because of the high pressures and temperatures, death or physical injury can result from failure to use caution and to follow procedures in steam, gas, and air piping systems. (See safety precautions for each system.)

GAS AND AIR PIPING

GAS SYSTEM

10-9. Gas piping is used for heating. Fuel gas is manufactured or natural. In its natural state, it is colorless and odorless with a specific gravity of about one-half that of ordinary air. Chemicals are added so that users can detect a gas leak by its odor. Natural gas (methane) is not poisonous but can cause suffocation in a closed space. Manufactured gas can be poisonous, since it may contain carbon monoxide. It is explosive under certain conditions. Installation standards must be met when gas is distributed. Fuel gas is generally distributed by steel gas mains.

Installation

10-10. Piping used for water services is suitable for use in gas piping. Iron or steel pipe with threaded joints is usually used for gas services since fuel gas does not corrode these metals. Use galvanized pipe from the meter main to the building; the branches can be copper. Do not use lead pipe or rubber tubing to carry gas.

10-11. Plastic pipe can also be used for gas services. When plastic pipe is used, heat weld the joints; do not use glue or cement. Do not install plastic pipe above ground in distribution systems with pressure greater than 50 psi of grade, or where the operating temperatures will be below –20 degrees Fahrenheit or above 100 degrees Fahrenheit.

10-12. The installation and support of gas piping is the same as for water piping. Since fuel gas contains moisture, all gas pipes should slope. Install capped drip legs to allow drainage of moisture, that might condense in the pipe. Check these drips and empty them when necessary. Do not install drips where moisture may freeze. Avoid traps in the pipes. Take all branches off the top of the service pipe to prevent water from collecting in the branches. Gas piping should be exposed, and unions and bells should be visible to allow frequent inspections.

Testing

10-13. After installation, air test the entire gas main and service line system under a pressure that is at least 50 percent of the operating pressure. Test pressure must be at least 75 psi.

AIR SYSTEMS

10-14. Air piping is not used for heating. It is used for special purposes such as automotive service stations, machine shops, or laundries, where a compressed-air system may be used.

Compressed-Air System

10-15. The air is compressed in an electric, gasoline, or diesel-driven compressor (*Figure 10-1, page 10-4*) and stored in a tank until needed. Air is drawn into the compressor, reduced in volume, and passed through a check valve into the storage tank. The pressure control valve and safety valve

regulate the operation of the compressor. When the amount of air stored in the tank reaches the desired pressure, the compressor shuts off automatically. If the pressure control valve fails, the safety valve reduces the pressure on the tank, which prevents an explosion. Compressed air is drawn from the tank through a reducing valve with a gauge on either side. The reducing valve may be set to furnish any desired pressure to the equipment, regardless of the air pressure within the tank.

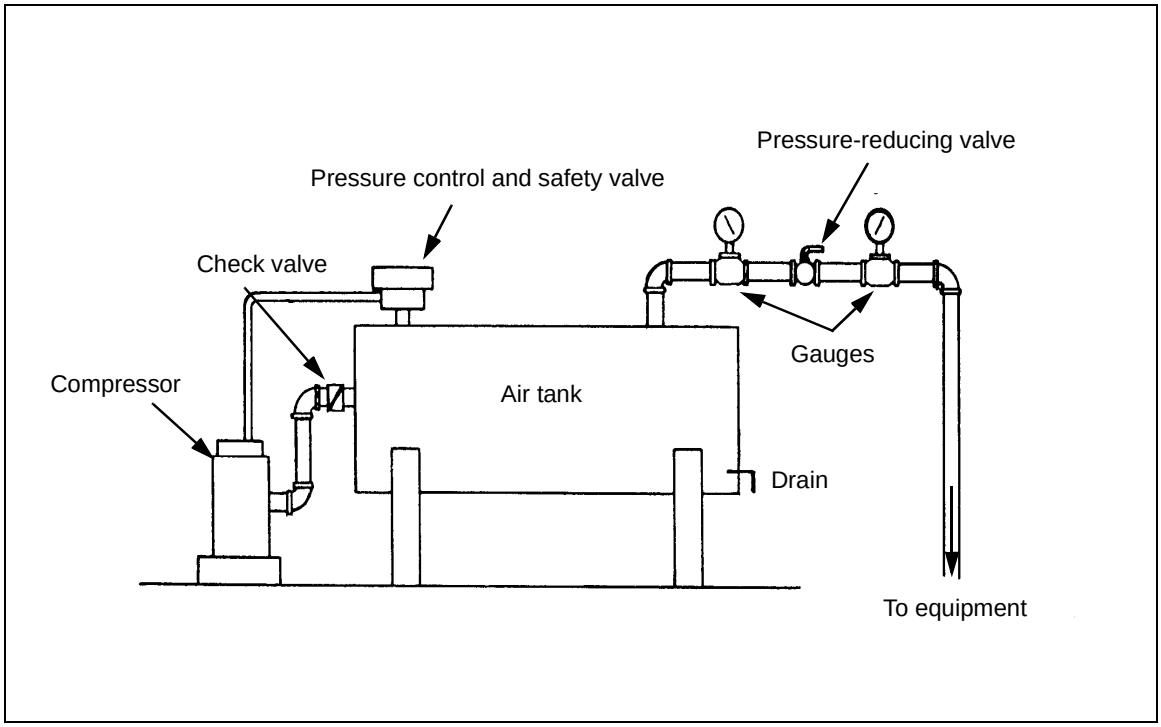

Figure 10-1. Air-Compressor Tank

Installation

10-16. Installation standards for air piping are the same as for gas piping. However, to reduce friction loss of pressure, avoid pipes that have sharp bends.

UNDERGROUND INSTALLATIONS

10-17. Many gas and air pipes are laid underground. Threading of pipe reduces the wall thickness by about 40 percent, and the pipe is more likely to corrode or be damaged by vibration. For this reason, dresser couplings are used for underground piping instead of threaded joints. Dresser couplings provide leakproof joints without reducing the pipe wall thickness. *Figure 10-2* shows dresser couplings for large and small pipes.

- Large-sized pipe. A dresser coupling is suitable for large-sized pipe. It has a seamless body with gaskets and flanges bolted together to form a flexible leakproof joint. Since these couplings are used on large, steel gas pipes, gas companies (rather than plumbers) usually install them.

- Small-sized pipe. The dresser coupling for small-sized pipe is made of a seamless body with two gaskets, two retainers, and two octagonal end nuts. Dresser couplings are available in sizes from 3/8 inch to 2 inches.

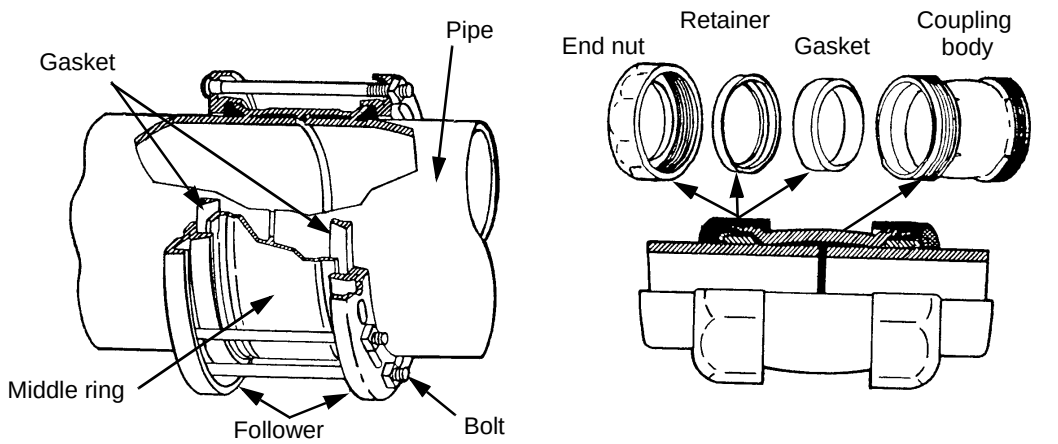

Dresser coupling for large-sized pipe **Dresser coupling for small-sized pipe**

Figure 10-2. Dresser Couplings

SAFETY

10-18. Both gas and air piping are explosive under certain conditions. Remember the following:

- Never smoke in an area where gas piping is being installed or repaired; it is not permitted.
- Never use matches to test for gas leaks.
- Locate the meter and the riser pipes some distance from electric meters, switches, fuses, and other equipment.
- Install adequate pressure-relief valves on air compressors.
- Test all lines before use.
- Remove the pressure from all the lines before working on them.
- Provide protection for the pipes against freezing of condensed water in unheated locations.

Chapter 11

Centrifugal Pumps

Many kinds of pumps are in general use such as centrifugal, sump, rotary, and reciprocal pumps. The type of pump chosen depends on its use, the volume of liquid to be pumped, and the distance or height to which the liquid must be delivered. This chapter only covers centrifugal pumps. Refer to the manufacturer's manual for specific operation and repair of different models of pumps.

Pumps deliver water to a water distribution or plumbing system. They increase water pressure within the system and/or pump water from its source into a storage tank or reservoir, or they pump wastes into a sewer or drainage line. They are used in booster systems to maintain adequate pressure within buildings or to increase pressure for high-rise buildings.

CHARACTERISTICS

11-1. In centrifugal pumps (*Figure 11-1, page 11-2*), when a liquid whirls around a point, a centrifugal force is created forcing the fluid outward from the center. The larger centrifugal pumps can develop a pressure great enough to raise a column of liquid more than 100 feet. The capacity of centrifugal pumps ranges from 5,000 to 200,000 GPH.

IMPELLER

11-2. The centrifugal pump is simple and efficient. A set of vanes on a rotating impeller is mounted inside a *volute* (a snail-shaped channel for the water). The diameter of the volute increases toward the outlet opening, or direction of flow. As liquid passes into the gradually widening channel, the speed decreases and the pressure increases. An intake passage leads the liquid to the impeller, a discharge passage leads it away, and a seal on the impeller shaft keeps the liquid inside the pump and the air outside the pump.

HEAD

11-3. Head is the force exerted by a column of fluid measured at its lowest point. The head capacity of a pump is the pressure it must produce to overcome the pressure of the fluid. If the head is increased and the speed is unchanged, the amount of water discharged will decrease, and vice versa. If the head is increased beyond the head capacity of the pump (shutoff head), no water will be pumped. The impeller simply churns the water inside the case, heating the water and the pump.

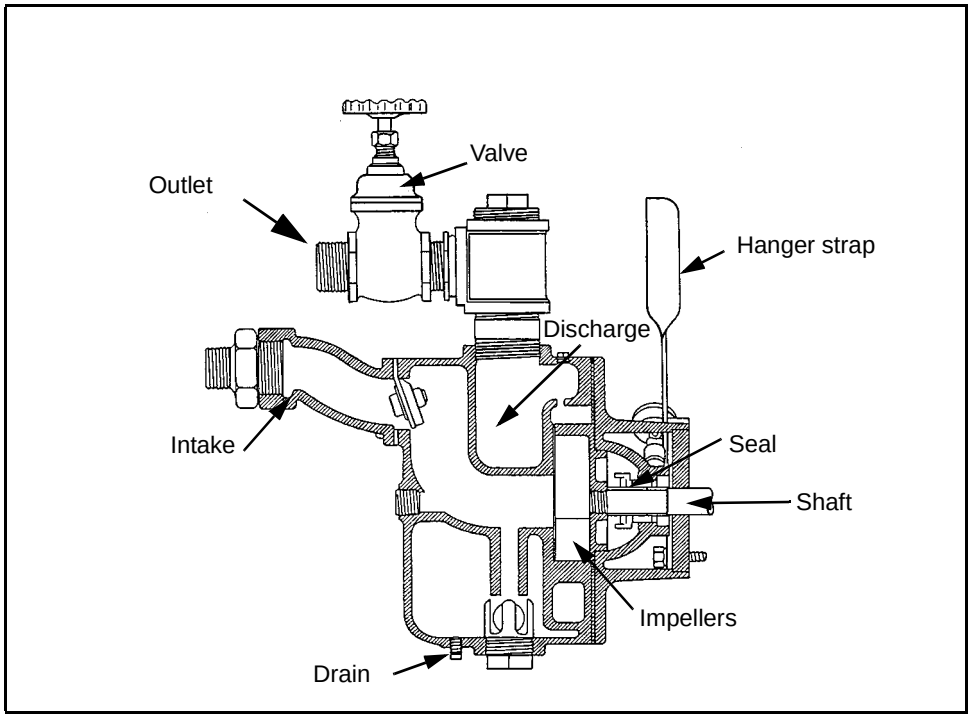

Figure 11-1. Centrifugal Pump

PRIMER

11-4. The centrifugal pumps issued for general use are self-priming (*Figure 11-2*). They are rated at 125 GPM at a 50-foot head. Each pump has a priming chamber. This eliminates repriming when the pump is stopped, unless the priming chamber has been drained. The pump is set on a frame and is driven by a 2-cylinder, 3-horsepower, military standard engine. The unit is close-coupled, and the impeller in the pump is attached directly to the end of the engine crankshaft. A self-adjusting mechanical seal prevents water leakage between the pump and the engine. The only required adjustment is a slight turn on the grease cup nut. This pump works best at a suction lift of 15 feet. At greater suction lifts, its capacity and efficiency rapidly decrease.

TYPES

11-5. Centrifugal pumps are either submerged or submersible.

SUBMERGED

11-6. When the pump motor is placed above the water level with the pump itself in the water, it is a submerged pump. The motor is usually mounted near the wellhead and is connected to the pump by a shaft. The submerged pump is used mainly for shallow wells because long pump shafts vibrate.

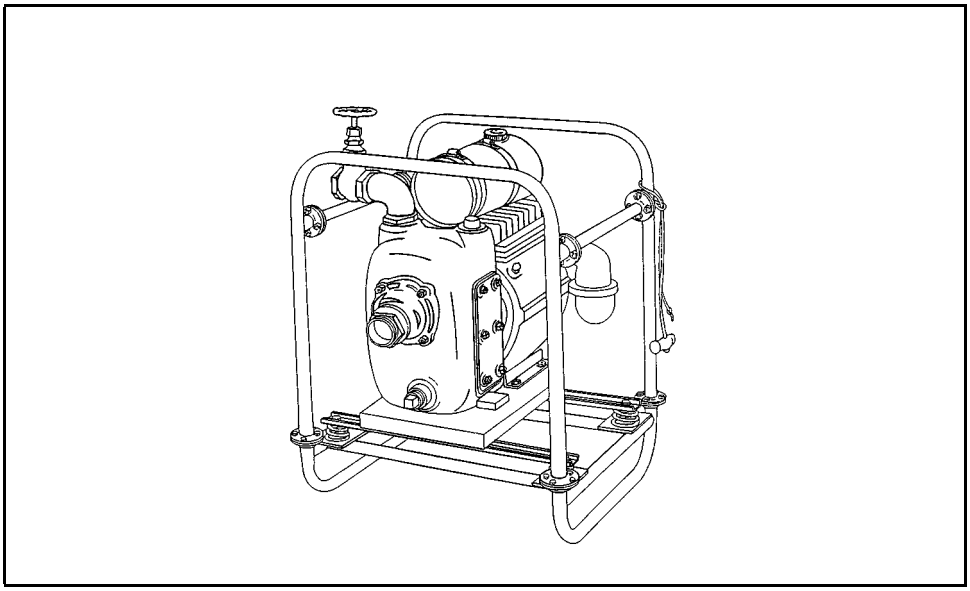

Figure 11-2. Standard 125-GPM Centrifugal Pump

SUBMERSIBLE

11-7. A submersible pump is connected directly to an electric motor in a single casing. The unit is lowered into the well with the motor above the pump. Both motor and pump may be below the water level. A waterproof cable connects the motor to the control box at ground level. A suitable discharge hose or pipe is connected to the housing elbow. The submersible pump should be used when the suction lift exceeds 25 feet.

INSTALLATION AND OPERATION

11-8. The plumber must know the types of pumps to be installed and how they work. The following points are important when installing or operating a centrifugal pump:

- Set the pump on a firm foundation to avoid vibration.
- Locate the pump as close to the water supply as possible.
- Make sure the suction hose does not have a collapsed lining or any breaks, cuts, or pinholes.
- Tighten hose connections, and screw nipples tightly to prevent air leaks. Use pipe cement. Rigid hose is preferred on the discharge side.
- Support the piping so that the pump does not carry its weight.
- Reduce friction loss by making all piping, especially on the suction side, as short as possible with few elbows.
- Place the suction pipe so that it rises gradually toward the pump. (This is not necessary on a centrifugal pump that is self-priming.)

NOTE: Install a strainer on the suction line to prevent clogging that can reduce capacity and stop the pump. Ensure that the net on the strainer is at least four times the size of the net on the suction pipe. Inspect and clean the net often. To decrease friction loss in long discharge lines, use a pipe that is one or more sizes larger than the discharge fitting of the pump.

11-9. A pump uses a prime mover, such as an electric motor or gasoline engine, to move liquid from one point to another, raising it to a higher level. The pump produces a partial vacuum within itself by lowering the pressure in the intake side below the pressure of the air outside (atmospheric pressure). Atmospheric pressure outside the pump forces the liquid up through the suction line into the pump itself. If a perfect vacuum could be produced, atmospheric pressure would lift water to a maximum of 34 feet. Since a perfect vacuum is impossible because of piston slippage, valve leaks, and friction, the suction lift from the source of water to the pump must never be more than 22 to 25 feet at sea level and less at higher altitudes.

VALVES

11-10. A centrifugal pump contains several valves all having different functions. These include—

- Check valve. This valve (on the suction side) prevents the loss of priming liquid in the pump casing during idle-pump periods. It allows liquid to flow in one direction only and usually opens or closes automatically.
- Foot valve. This valve (on the end of the suction pipe) is not required but may be provided to fill the pipe.
- Gate valve. This valve is hand-operated by turning a wheel and is used on discharge and suction lines to cut off flow. It should never be used to throttle or control flow, since the flow of liquid corrodes the gate fence.
- Relief valve. This is a safety valve, designed to open when the liquid pressure in the pump becomes too high.

PRIMING

11-11. After installation, prime the pump by filling it with water. After the first priming, a self-priming centrifugal pump does not need to be reprimed unless it has been drained. To prime a pump—

Step 1. Remove the priming plug on top of the pump casing, and fill the case to the top with water. Ensure that the valve on the discharge line is wide open.

Step 2. Replace the plug.

Step 3. Start the pump.

11-12. To decrease the load and fuel consumption on shallow suction lifts with little liquid supply to pump, reduce the engine speed by using the throttle.

MAINTENANCE AND REPAIR

11-13. Plumbers must know how to maintain and repair pumps.

SHAFT SEALS

11-14. Shaft seals and packing prevent water and air leakages. Two rings provide the shaft seal. One is scaled to the shaft, which rotates; the other is sealed to the pump casing, which is fixed. These rings press against each other, and when the engine is running, one is fixed and the other rotates. This close contact seals the pump. The lubricant is grease, oil, or the liquid that is being pumped. Carefully follow the servicing and replacement instructions on the shaft seal.

PACKING

11-15. When a stuffing box is used instead of a shaft seal, packing is important. Use only soft and flexible packing. A long, fiber, tallowed flax packing is satisfactory for pumps handling cold water. If drawing down on the stuffing box gland cannot reduce leakage, add one ring of packing to allow further adjustment. If this does not control leakage, replace the old ring with new rings of packing.

BEARINGS

11-16. An oversupply of grease produces heat, which causes the grease to ooze out of the bearing housing. When bearings are removed for cleaning, they should be thoroughly dry before replacing. Ball bearings need lubrication only two or three times a year, depending on use. Clear the bearing housing once every year or year and a half with carbon tetrachloride, gasoline, or kerosene; then relubricate it.

NOTE: If a pump is drained, allow it to run about a minute to dry out the impeller chamber.

TROUBLE SOURCES

11-17. Certain troubles may arise when operating a centrifugal pump. Possible causes are when—

- The pump does not prime properly.
  - The pump casing is not filled with water.
  - The priming hole is plugged (clean it out through the drain plug).
  - The pump is running too slowly.
  - Air is leaking from the suction line or around connections.
  - The pump seal is worn or damaged.
  - The lining of suction hose has collapsed.
  - The suction line or strainer is clogged.
  - The impeller is clogged, worn out, or broken.
  - The lift is too high for the capacity of the pump.
- There is not enough water delivered or the water does not have enough pressure.

- The engine is not running at the rated speed.
- The seal is leaking.
- Wear causes too much clearance between the impeller and the pump casing.
- The suction hose is too long, causing excessive friction loss.
- Factors in bullet 1 above, may apply. Check them.

Chapter 12

Insulation

Insulation prevents loss of heat, freezing of hot- and cold-water pipes, and condensation on cold-water pipes, and protects against fire. Insulation can reduce noise and vibration from heating or air-conditioning equipment and noise made by water flowing inside the pipes. It also reduces pipe expansion and contraction.

TYPES

12-1. Insulation may be either the unformed blanket-type that allows shaping and wrapping or rigid, preformed sections that fit around pipe runs and other objects (*Figure 12-1*).

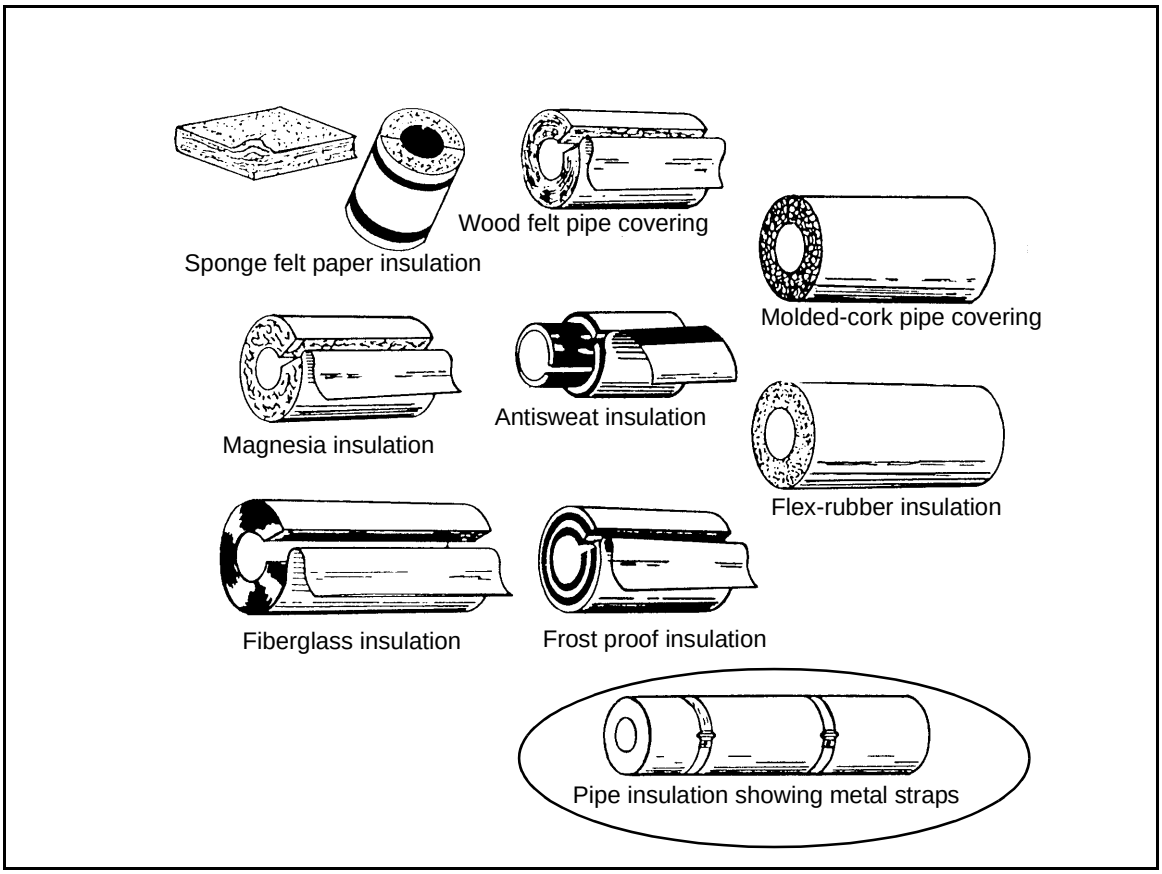

Figure 12-1. Insulation

RIGID, PREFORMED INSULATION

Frost Proof

12-2. Frost proof insulation is used on cold-water service lines that pass through unheated areas and those that are located outside. A common supply is 3 feet long and 1 1/2 inches thick, with a canvas cover.

Fiberglass

12-3. Fiberglass insulation is shaped to fit pipes, tubing, small boilers, and water heaters. It has a long life; will not shrink, swell, rot, or burn; is easily applied; is lightweight; and saves space. It is made of very fine glass fibers bound together by an inactive resinous mixture.

Antisweat

12-4. Antisweat insulation is used on cold-water lines. It keeps water in the pipes colder and, if properly installed, prevents the pipes from sweating. The outer layer has a nap about 3 inches long, which extends beyond the joint to help make a perfect seal. A canvas jacket is placed around each 3-foot length to protect the outer felt covering.

Cork Pipe Covering

12-5. This covering is a grainy material made by grinding the bark of cork trees. No other product can match its advantages. This pure, clean cork is pressed and molded to the exact size and shape and finished with a coating of plastic asphalt. It is ideal for covering brine, ammonia, ice water, and all kinds of cold-water lines. It has excellent insulating qualities over a wide low-temperature range. Cork pipe covering will not rot or burn and is clean, sanitary, and odor free. It comes in a variety of sizes and shapes that can be used on various sizes of pipes and fittings. A waterproof material should be used to coat it to keep moisture out of the insulation.

Wool Felt

12-6. Wool felt is made of matted wool fibers or wool and fur or hair, pressure-rolled into a compact material. It is used on cold-water service and hot-water return lines. It is often used with alternate layers of tar paper to provide waterproof insulation.

Flex Rubber

12-7. This insulation is a tough, flexible rubber material. It has good insulating qualities, good cementing qualities, excellent weather-aging qualities, and prevents sweating of cold-water lines.

Magnesia

12-8. This insulation has maximum strength and is very suitable for steam and hot-water lines or other pipes whose temperature does not exceed 600 degrees Fahrenheit. It has a canvas jacket and may be used on pipes up to 30 inches in diameter.

BLANKET INSULATION

12-9. Blanket insulation insulates against heat loss and protects against fire. This insulation is used on boilers, furnaces, tanks, drums, driers, ovens, flanges, and valves. The fiberglass type is used on small boilers and water heaters. It is used to wrap around objects that are irregular in shape and for large, flat areas. It is made in strips, sheets, rolls, and blocks. It comes in different widths and thicknesses, depending on the equipment to be insulated. It resists vermin (insects, rats, mice) and acid and is fireproof.

INSTALLATION

PIPE COVERING

Aboveground Piping

12-10. Each section of installation is split in half and has a canvas cover with a flap for quick sealing. Cheesecloth can be used in place of canvas, but it must be glued in place. Use joint collars to cover joint seams on piping exposed to outside conditions. Use metal straps at least 3/4-inch wide, placed 18 inches apart, to hold the insulation firmly (See insert in *Figure 12-1, page 12-1*).

Underground Piping

12-11. Some underground piping must be insulated. The insulation is similar to above ground insulation except that it needs more protection from the weather. In most cases, a concrete trench is made for installation of the piping. Molded pipe covering or loose mineral wool or glass wool is used. To protect the pipes from ground moisture, use coal tar as a sealer or wrap the pipes with tar paper or aluminum foil.

BOILER AND TANK COVERINGS

12-12. Insulate unjacketed boilers or storage tanks with approved insulation material. Some approved types are magnesia, mineral wool, calcium silicate, and cellular glass that is at least 2 inches thick. Keep the insulation away from the metal surface by applying it over 1 1/2-inch wire mesh, lifted by metal spacers that provide an air space of at least 1 inch. Fill the joints with magnesia, mineral wool, or other suitable cement. Cover the surface of the insulation with a thin layer of hard-finished cement, reinforced with 1 1/2-inch wire mesh. Wire the insulation firmly in place.

VALVE AND FITTING COVERINGS

12-13. Cover valves and fittings with wool, felt, magnesia cement, or mineral wool cement the same thickness as the pipe covering. These types of insulation are molded into shape. For magnesia or mineral wool cement insulation, use cheesecloth to bind and hold it in place.

MAINTENANCE

12-14. Properly installed insulation requires little maintenance. Insulation exposed to weather or possible damage from sharp objects must be frequently

inspected. Proper installation and frequent inspections will minimize maintenance problems.

PIPE COVERING

12-15. If the canvas cover gets torn or punctured, patch it with a piece of canvas. Use only waterproof paste when installing or repairing outside insulation.

LEAKY PIPES

12-16. When repairing a leak in an *insulated* pipe, remove the insulation back far enough to uncover the damaged pipe. When reinstalling the pipe, use the same kind of insulation used for the rest of the system.

VALVES AND FITTINGS

12-17. An inspection may reveal loose straps or loose insulation around valves and fittings. Retighten the straps and replace or glue down the loose insulation.

Appendix A

Metric Conversion Chart

A-1. Use *Table A-1* to convert from US measurement to metric and metric to US measurement.

Table A-1. Metric Conversion Chart

US Units	Multiplied By	Equals Metric Units
Length		
Feet	0.30480	Meters
Inches	2.54000	Centimeters
Inches	0.02540	Meters
Inches	25.40010	Millimeters
Area		
Square inches	6.45160	Square centimeters
Square feet	0.09290	Square meters
Volume		
Cubic feet	0.02830	Cubic meters
Gallons	3.78540	Liters
Temperature		
Degrees Fahrenheit	Subtract 32, multiply by 5/9	Degrees Celsius
Metric Units	**Multiplied By**	**Equals US Units**
Length		
Centimeters	0.39370	Inches
Millimeters	0.03937	Inches
Meters	3.28080	Feet
Meters	39.37000	Inches
Area		
Square centimeters	0.15500	Square inches
Square meters	10.76400	Square feet
Volume		
Cubic meters	35.31440	Cubic feet
Liters	0.26420	Gallons
Temperature		
Degrees Celsius	Multiply by 9/5, add 32	Degrees Fahrenheit

Appendix B

Construction Plans and Drawings

SECTION I - PLANS AND DRAWINGS

ARCHITECT'S DESIGN

B-1. When architects design a building, they prepare a set of prints (a plan) drawn to scale, with actual dimensions annotated. A plan's legend lists three sources of additional information: a *standard* detail drawing, a *special* detail drawing, and a *BOM*. Plumbers use the plan, the drawings, and the BOM to lay out and plan a project. Refer to *Technical Manual (TM) 5-704* for further information on construction prints. (Heating and plumbing systems are sometimes shown on the same plan.)

B-2. Both standard and special detail drawings may show either an elevation view or a plan view. For a small structure, use only a plan view with some detail drawings, as described below:

- Standard detail drawings are indicated by a number and letter in a circle; for example 11G.
- Special detail drawings are indicated by a detail number, such as DETAIL #6.

B-3. The architect also prepares a set of specification sheets called a BOM, detailing the types and quality of materials to be used. (Refer to *Appendix C*.)

B-4. Plumbing symbols on construction drawings show the general location of pipes, valves, pumps, water tanks, and other items. See *Section II* of this appendix for a list of these symbols.

TYPICAL WATER SUPPLY AND DISTRIBUTION SYSTEM PLAN

B-5. *Figure B-1, page B-2*, shows a plan for a hospital water supply and distribution system. Plumbing symbols on the construction drawing show the general location of pipes, valves, pumps, water tanks, and other items. Pipe sizes are also shown on the drawing. Additional information is given in the notes and legend on the construction drawing or blueprint.

TYPICAL UTILITY AND BUILDING WASTE SYSTEM PLAN

B-6. *Figure B-2, page B-3*, is a typical utility plan for a bathhouse and latrine, showing the water system, waste system, and fixtures. This plan shows the building waste system, starting from the 4-inch drain in the shower room to the connection with the 4-inch pipe of the sewage system. The plumber determines the exact arrangement and the correct slope of the piping. In the plan view, the P-traps below the drains are specified, but not shown. When using standard detail drawings, the plumber must make

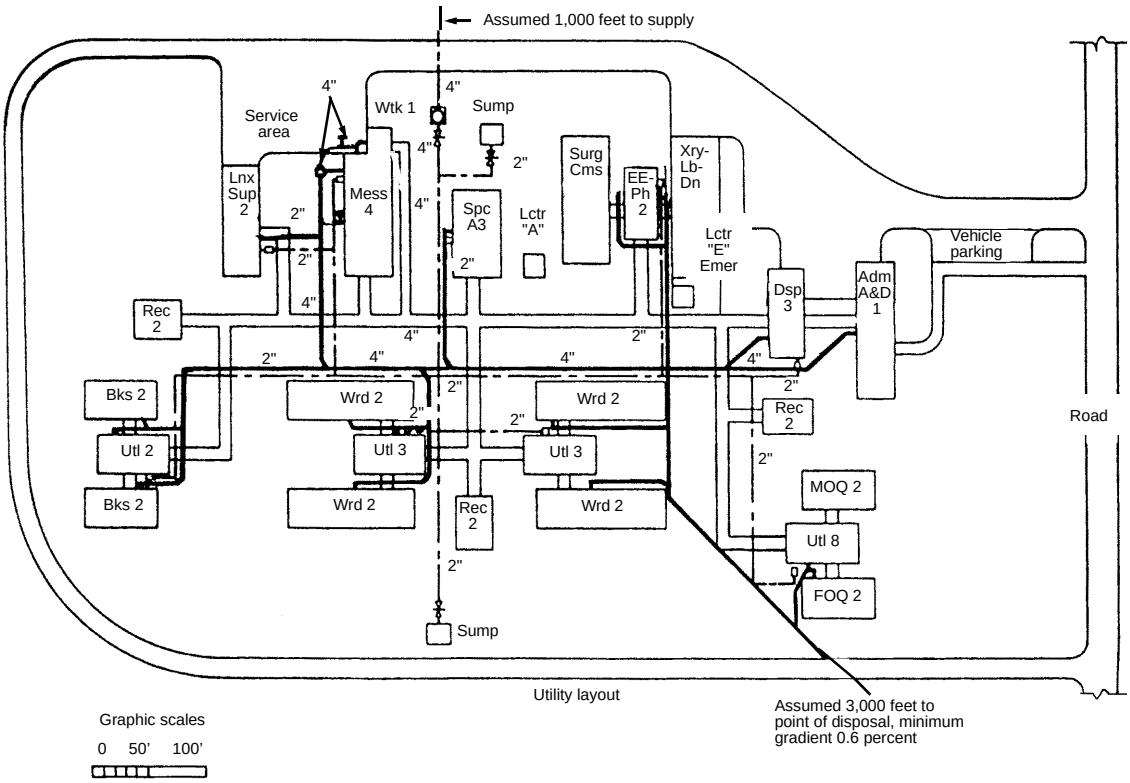

Schedule of Facilities			
Abbreviation/ Acronym	**Item**	**Quan-tity**	**Size or Unit**
	Buildings		
Adm-A&D1	Aministration, admission, and disposition-1	1	30' x 110'
Bks 2	Barracks-2	2	30' x 60'
Dsp 3	Dispensary-3	1	30' x 70'
EE-Ph2	Emergency entrance and Pharmacy-2	1	30' x 60'
Lnx-Sup 2	Linen exchange and supply-2	1	30' x 90'
Mess 4	Mess building 4	1	4,400 SF
FOQ 2	Officer's quarters-female-2	1	30' x 60'
MOQ 2	Officer's quarters male-2	1	30' x 60'
Rec 2	Recreation building-2	3	30' x 40'
SPC A 3	Special services building-Spc-A3	1	40' x 70'
Surg-Cms	Surgery-centralized materiel	1	40' x 100'
Utl 2	Utility building-2	1	90' x 60'
Utl 3	Utility building-3	2	30' X 60'
Utl 8	Utility building-8	1	30' x 60'
	Walks-covered	1	8' x 1435'
Wrd 2	Ward building-2 acute	4	30' x 100'
Xry-Lb-Dn	X-ray-lab-dental	1	40' x 110'
	Other construction		
	Road-double lane-6" macadam, 1" asphalt	0.34	mile
Sump	Sump-fire protection	2	10,000 gallons
	Hardstands-4"macadam	7.1	1,000 square yards
	Site area	10.1	acres
Wtk 1	Water tank	1	4,000 gallons
Lctr	Load center	1	----
Lctr "E" Emer	Load center-emergency	1	----

Figure B-1. Water Supply and Distribution System Plan

adjustments for a particular job. For a small structure of this type, only a plan view, as shown, will normally be provided together with detail drawings.

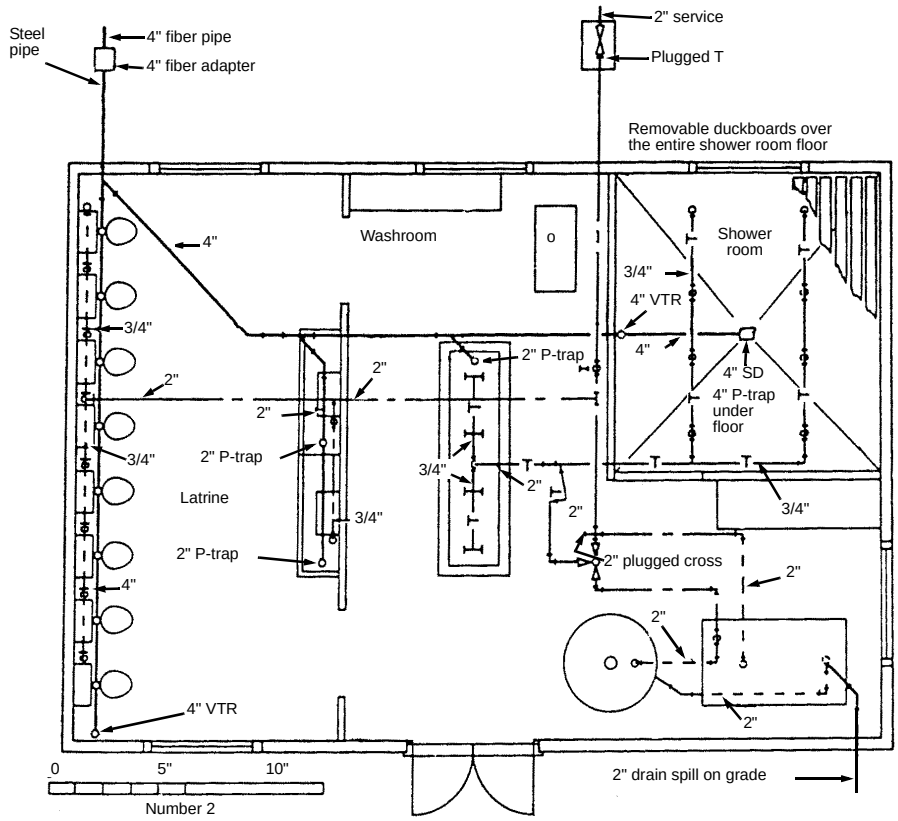

General Notes	Schedule of Drawings		
1. Refer to Technical Manual (TM) 5-300 for building shell requirements.	DWG Number	Description	Sheet Number
2. For national stock number (NSN) BOM, refer to TM 5-300 by facility number.	72323AW	Plans	1 of 1
3. For detail number 1 "mixing control for group shower" and detail number 2 "shower head and control valve," refer to DWG Number 7237738W sheet 1 of 1.	72323BW	Plumbing diagram & details	1 of 1
4. "T" indicates tempered water.	99960AA	Standard details	
5. Install 45° Y-branch with plug for CO above floor with rise for VTR.			
	93222AA	Wood frame construction barracks-type bldgs	1-7 of 7
	93101AA	Steel frame construction barracks-type bldgs	1-4 of 4

Figure B-2. Typical Utility Plan (Bathhouse and Latrine)

B-7. Accompanying this plan is—

- A standard detail drawing of a water closet installation (*Figure B-3, page B-4*).

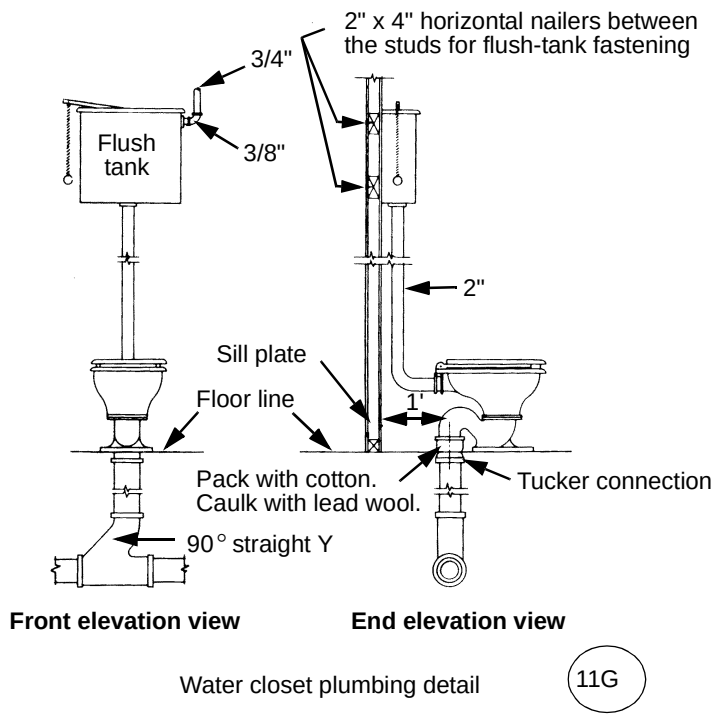

Figure B-3. Standard Detail Drawings (Bathhouse and Latrine)

- A special detail drawing of the control-valve and showerhead-fitting requirements (*Figure B-4*).

UNIT CONSTRUCTION AND PACKAGE UNIT PRINTS

UNIT CONSTRUCTION DRAWINGS

B-8. *Figure B-5, pages B-6 and B-7* shows a unit construction drawing (elevation view) of a water storage tank and tower. The drawing gives the size of the tower, the steel beams and the dunnage beams, and the dimensions of the footing that supports the beams. A plan view of the tower plus a detailed drawing of the float valve are shown in *Figure B-5*.

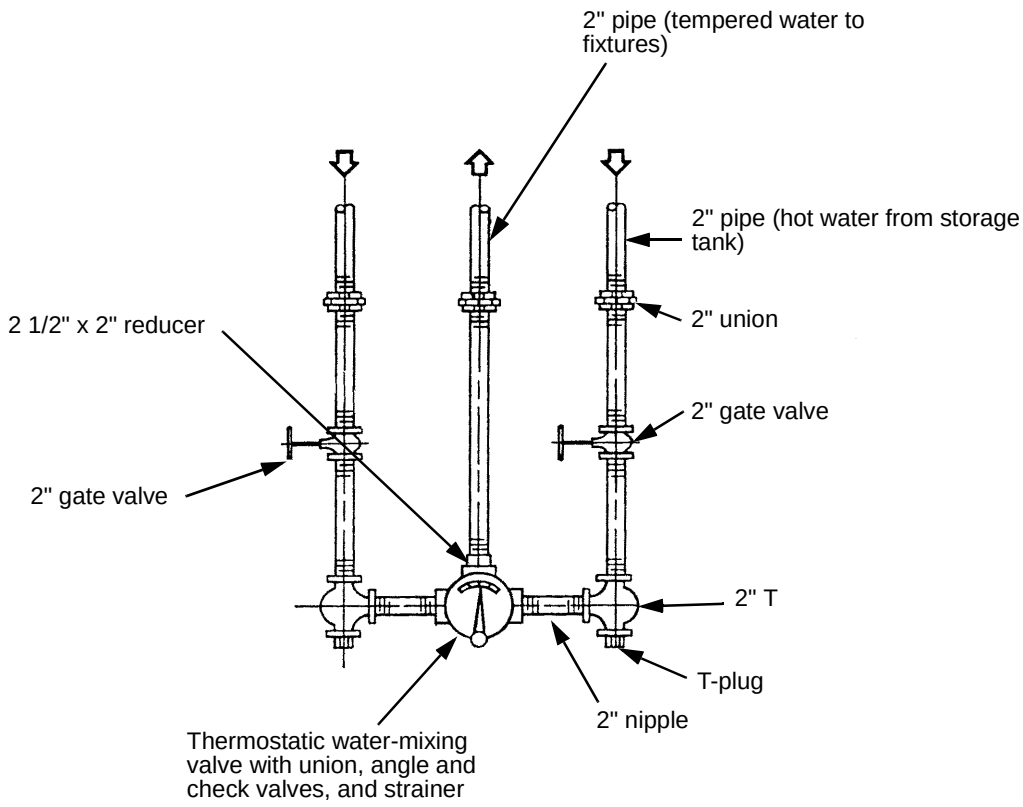

Mixing control-valve piping hookup

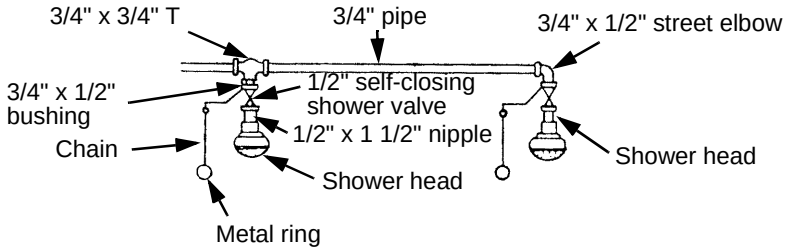

Detail #6 shower head and control valve

Figure B-4. Special Detail Drawings (Bathhouse and Latrine)

Water Tank and Tower Schedule										Facility Number
Type	Tank						Tower			Tank and Tower
	Barrels	Gal-lons	Inlet	Outlet	Diameter	Height	Dunnage beam	Steel beam	Height	
I	100	4,200	4"	6"	9' - 2 3/4"	8'	4' x 6" at 1' - 4"	6B12 at 1' - 4"	30'	**842103**
II	230	10,300	4"	6"	15' - 6"	8'	4' x 6" at 1' - 4"	8B13 at 1' - 5"	30'	**846102**
III	500	21,000	4"	6"	21' - 7"	8'	4' x 6" at 1' - 8"	10WF21 at 1' - 8"	30'	**842103**

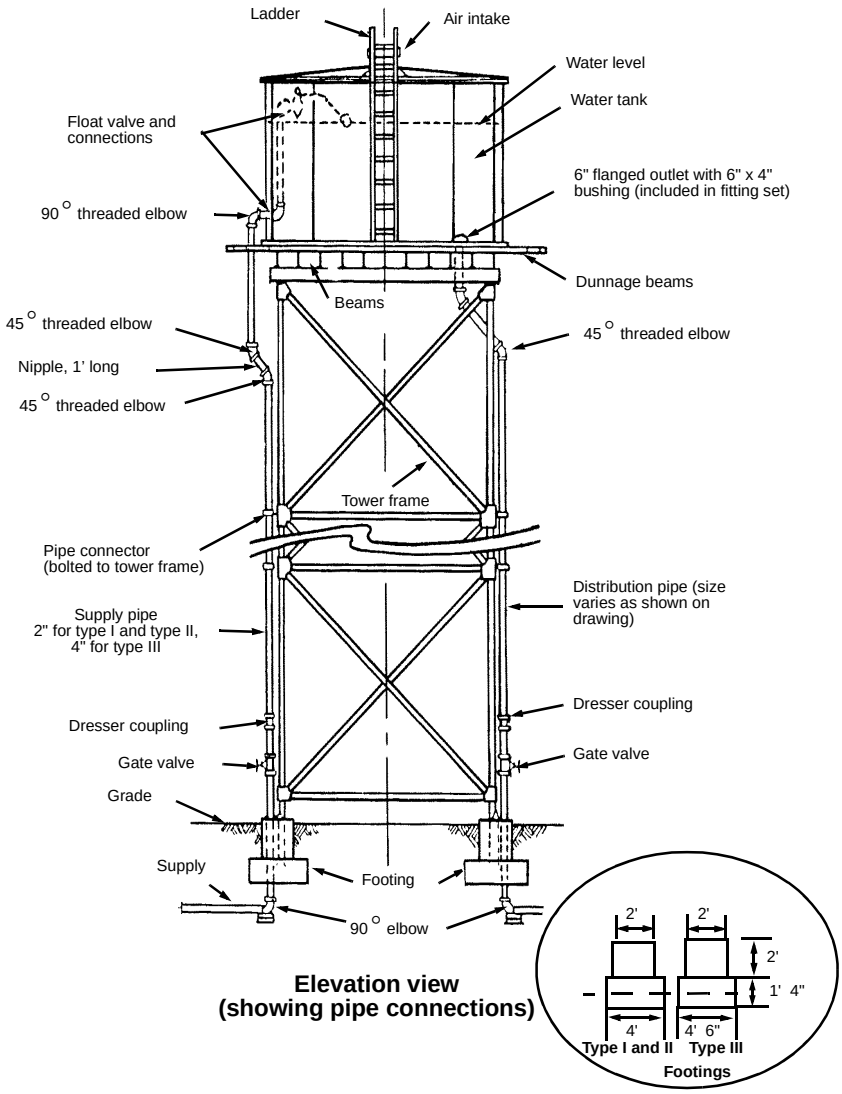

Elevation view (showing pipe connections)

Figure B-5. Typical Water Storage Tank and Tower (Detail Drawing)

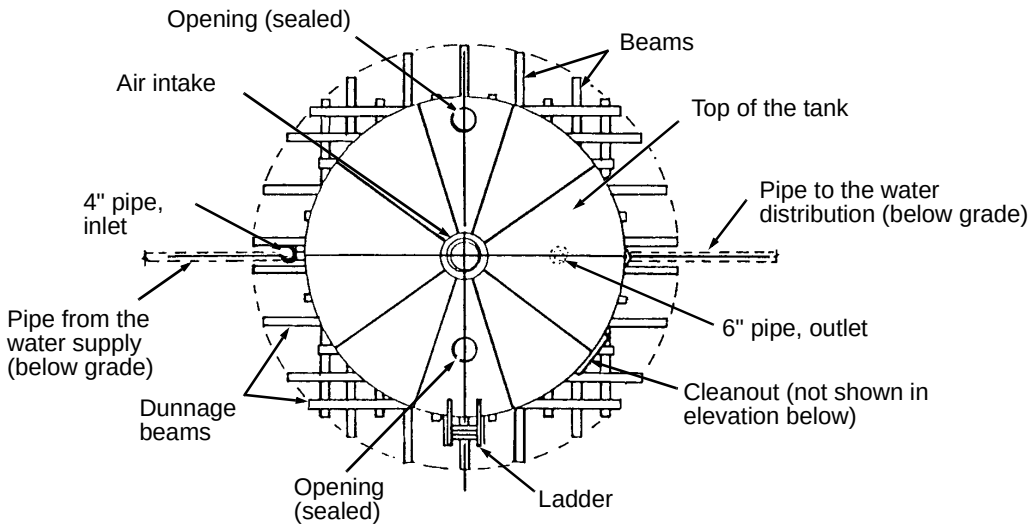

Plan view (showing pipe connections)

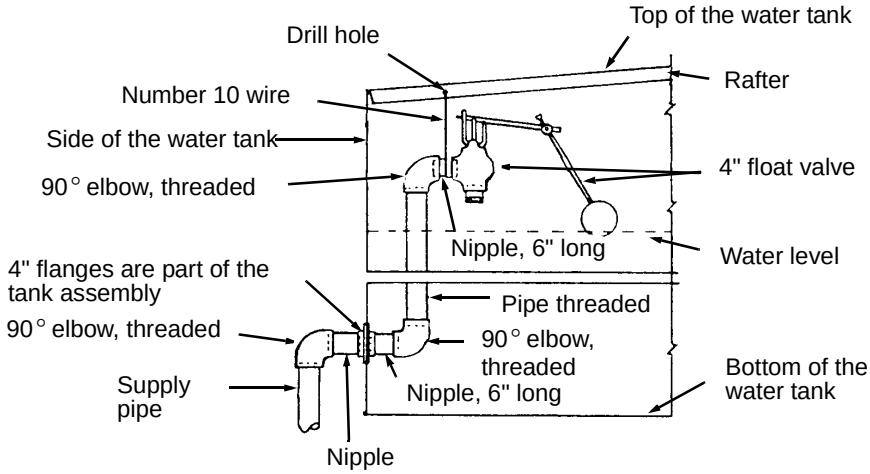

Detail drawing of a float-valve connection (no scale)

NOTE: Pipes, valves, and fittings are 2 inches for Type I and Type II tanks and 4 inches for Type III tanks.

Figure B-5. Typical Water Storage Tank and Tower (Detail Drawing) (Continued)

PACKAGE UNITS

B-9. Package units are assembled in the field according to the manufacturer's instructions.

SECTION II - PLUMBING AND HEATING SYMBOLS

TYPES OF SYMBOLS

PIPING SYMBOLS

B-10. Plans use solid or dashed lines to show the piping (*Figure B-6*). The size of the piping is also shown. Piping with up to 12 inches inside diameter is referred to by its nominal size. The exact inside diameter depends on the grade of pipe; heavy grades of pipe have small inside diameters because their walls are thicker. Piping over 12 inches in diameter is referred to by its actual outside diameter.

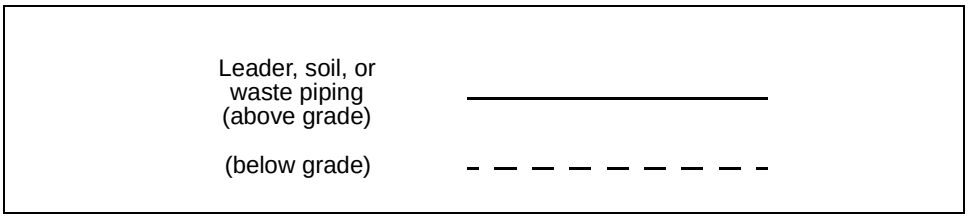

Figure B-6. Piping

FITTING SYMBOLS

B-11. Fitting symbols are used with the pipe symbols to show the size, the method of branching, and the type of fitting material to use (*Figure B-7*). The most commonly used fitting symbols are shown in this appendix.

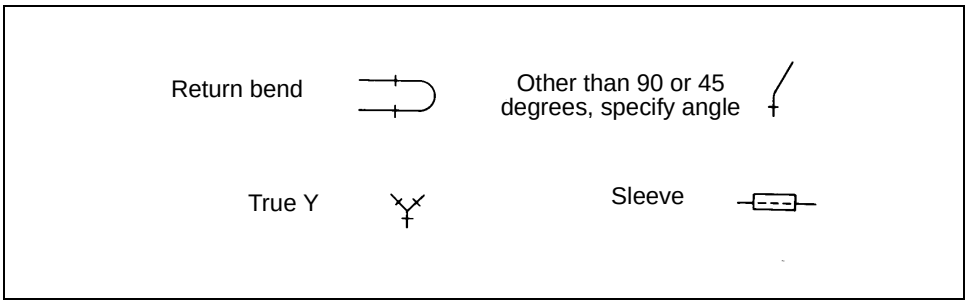

Figure B-7. Pipe Fitting Symbols

VALVE SYMBOLS

B-12. A plumbing system uses different designs and types of valves. *Figure B-8* gives a complete list of these valves and their symbols. Since drawings do not normally specify the kind of material and the size of valves, use the same size and material as the connected pipes. However, if valves are included on the BOM or plumbing takeoff list, they are listed by size, type, material, and

working pressure. For example: two-inch check valve, brass, and 175 pounds of working pressure.

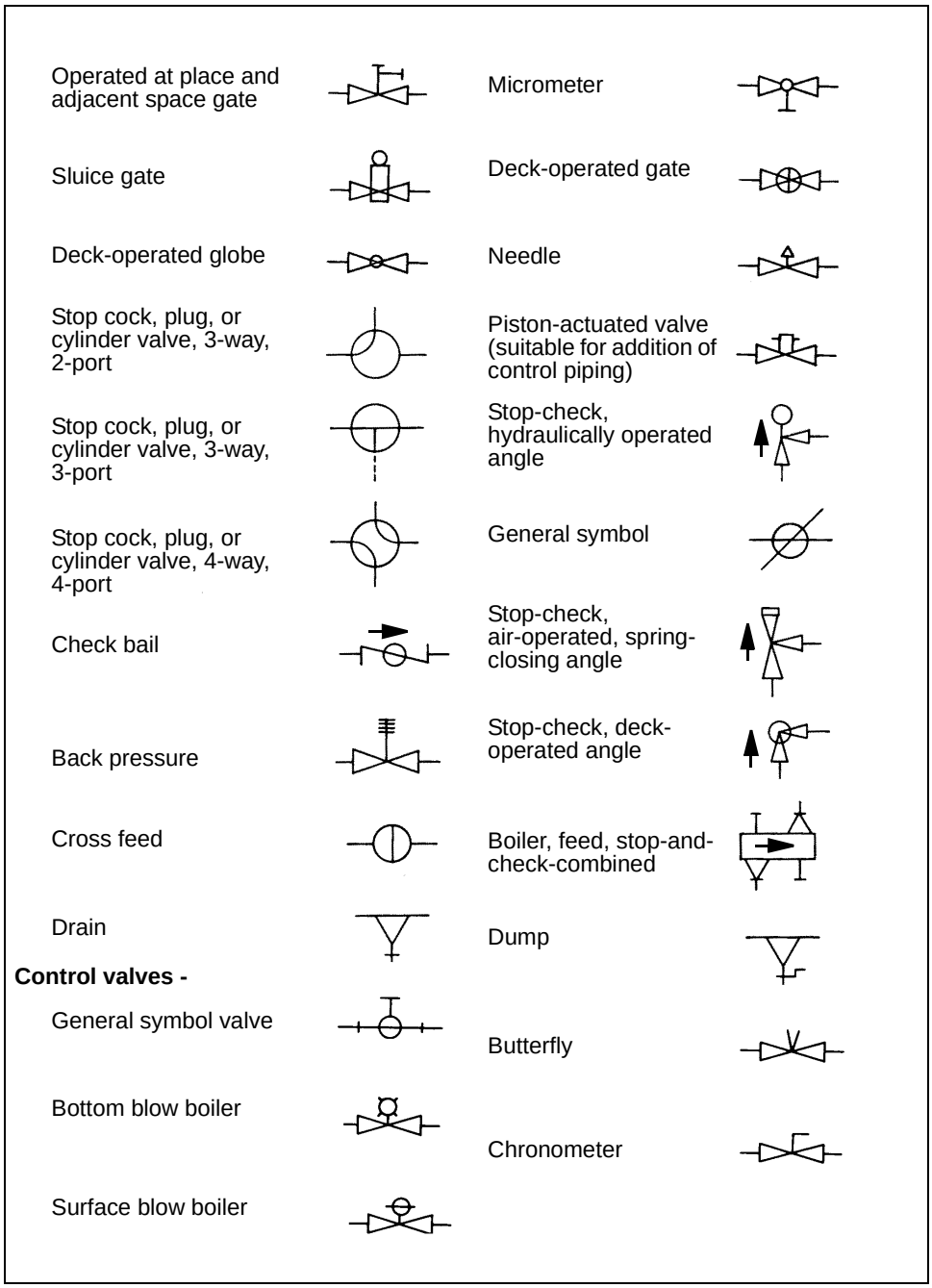

Figure B-8. Valves

FIXTURE SYMBOLS

B-13. These symbols show water closets, sinks or lavatories, urinals, and floor drains. *Figure B-9, page B-10*, shows the most common types of plumbing

fixture symbols. In most cases, the fixtures will be listed on the BOM or other documents keyed to the plumbing plan.

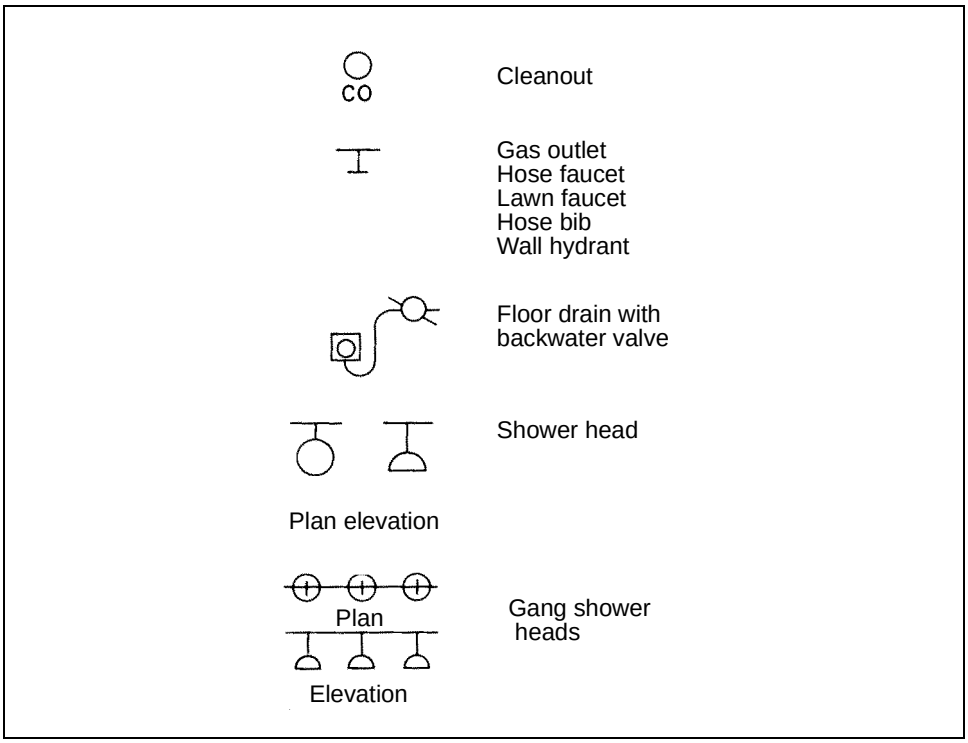

Figure B-9. Plumbing Fixtures

LIST OF SYMBOLS

B-14. Additonal standard plumbing and heating symbols are shown in subsequent figures in this chapter as indicated below:

- Heating Fittings (*Figure B-10*).
- Heating Fittings and Fans (*Figure B-11, page B-12*).
- General Purpose Fixture Symbols (*Figure B-12, pages B-13 through B-17*).
- Plumbing Symbols (*Figure B-13, page B-18*).

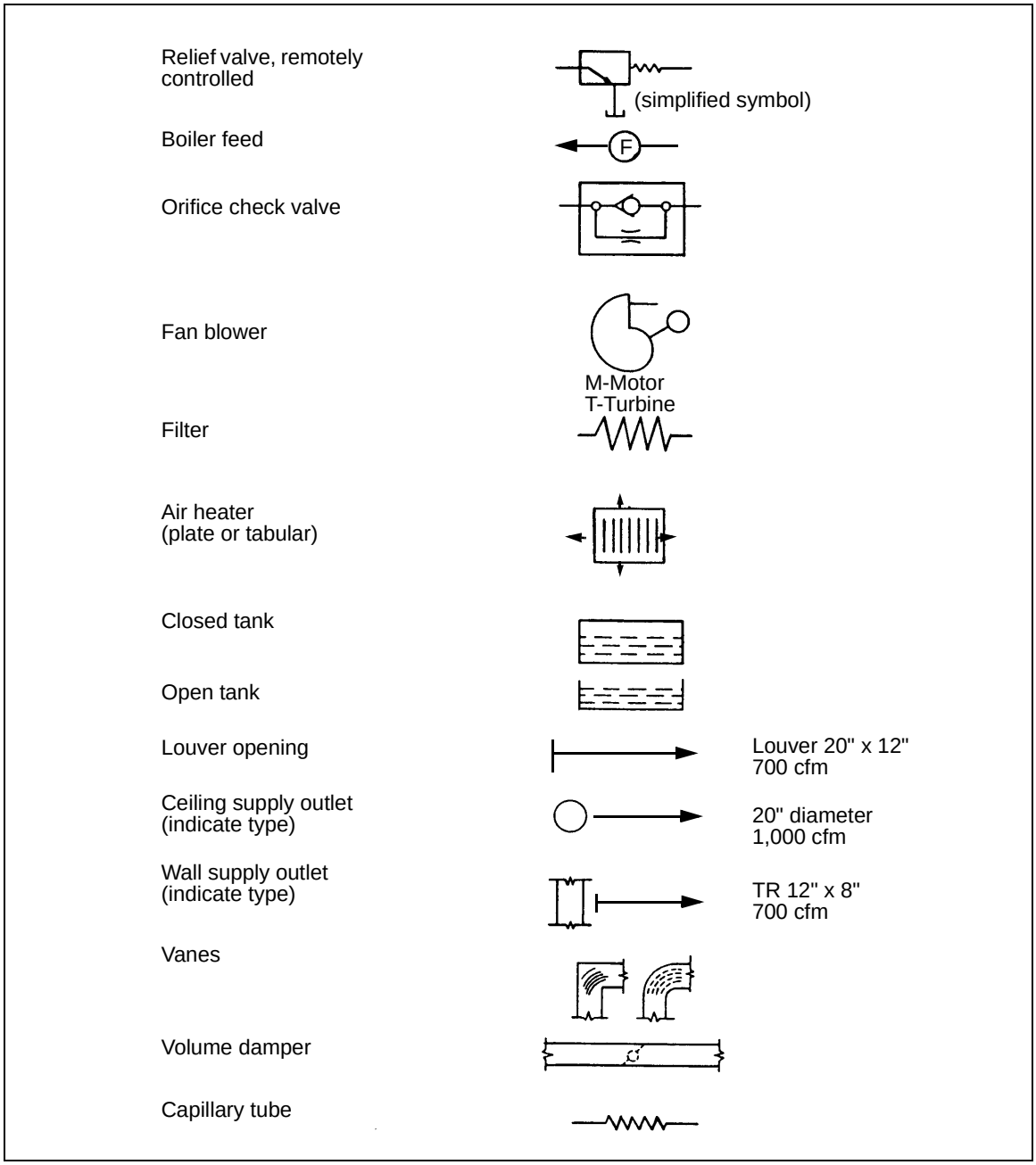

Figure B-10. Heating Fittings

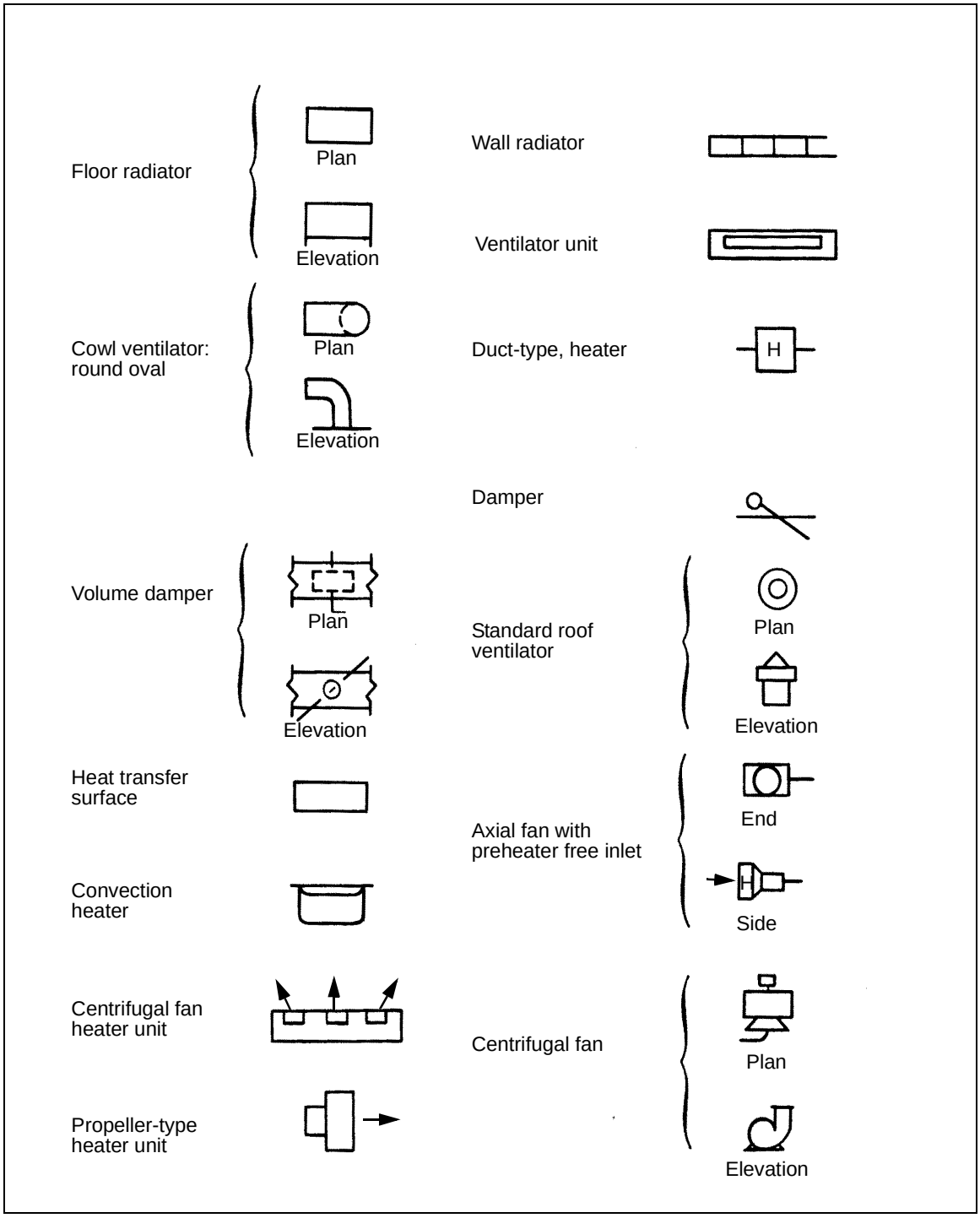

Figure B-11. Heating Fittings and Fans

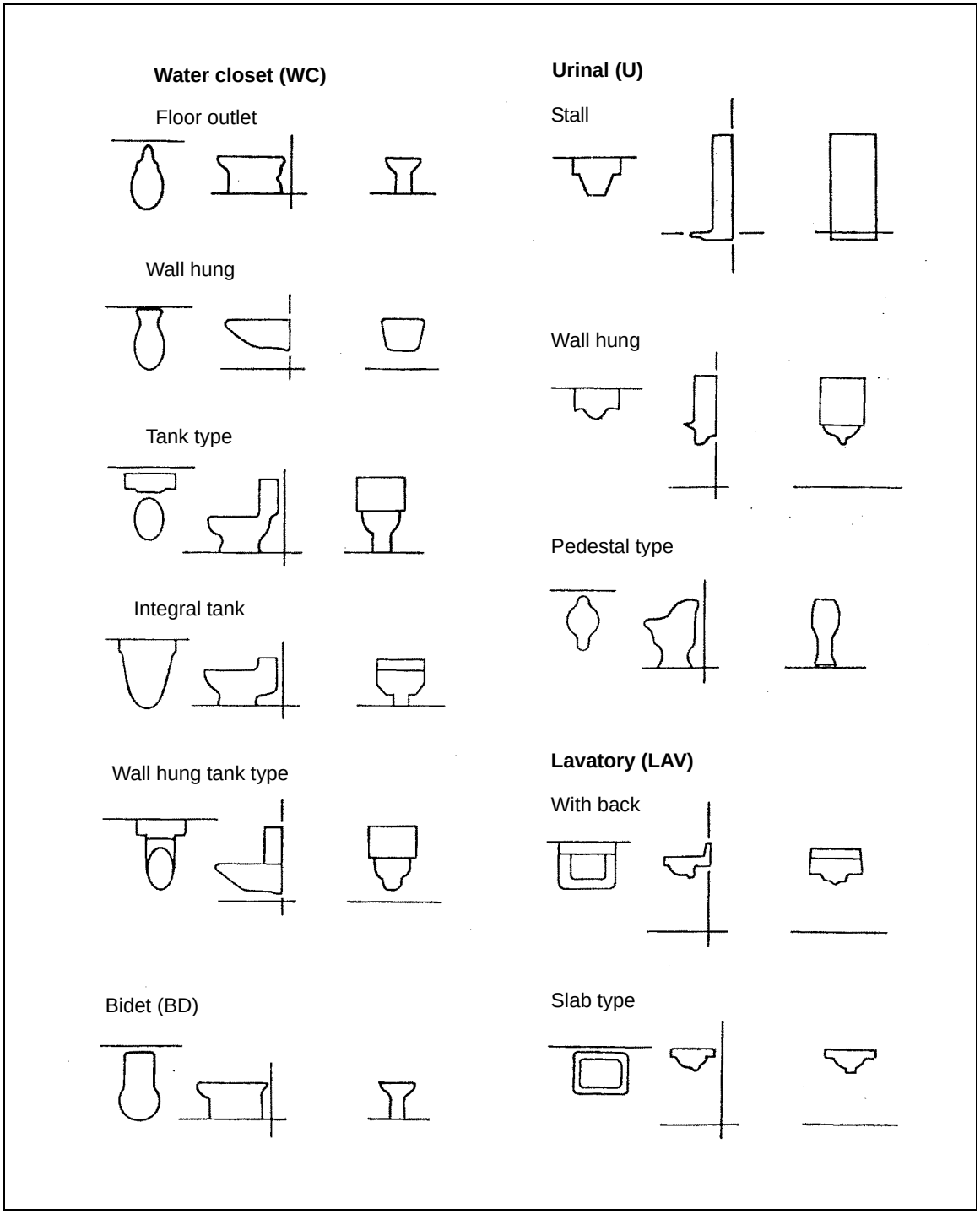

Figure B-12. General Purpose Fixure Symbols

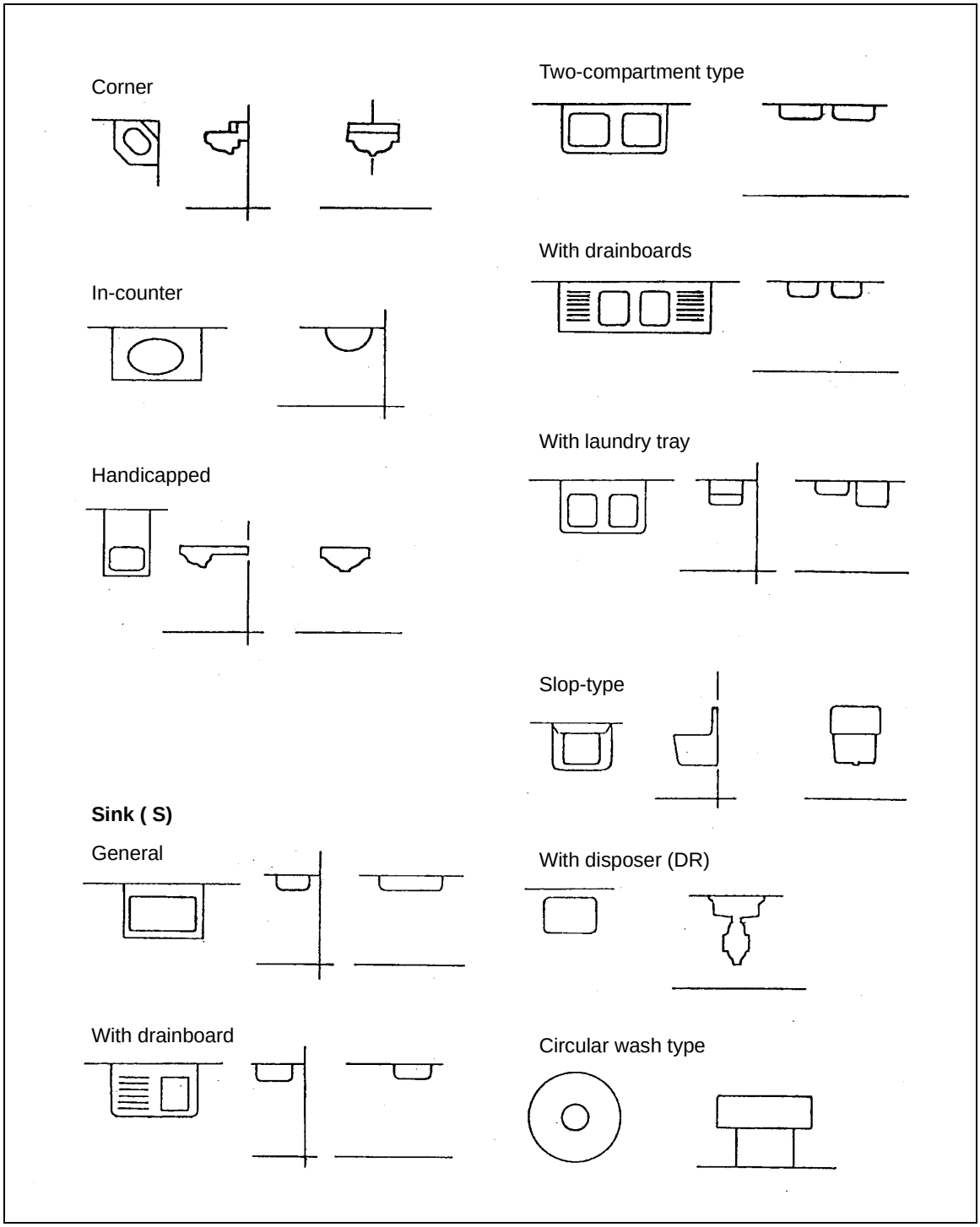

Figure B-12. General Purpose Fixure Symbols (Continued)

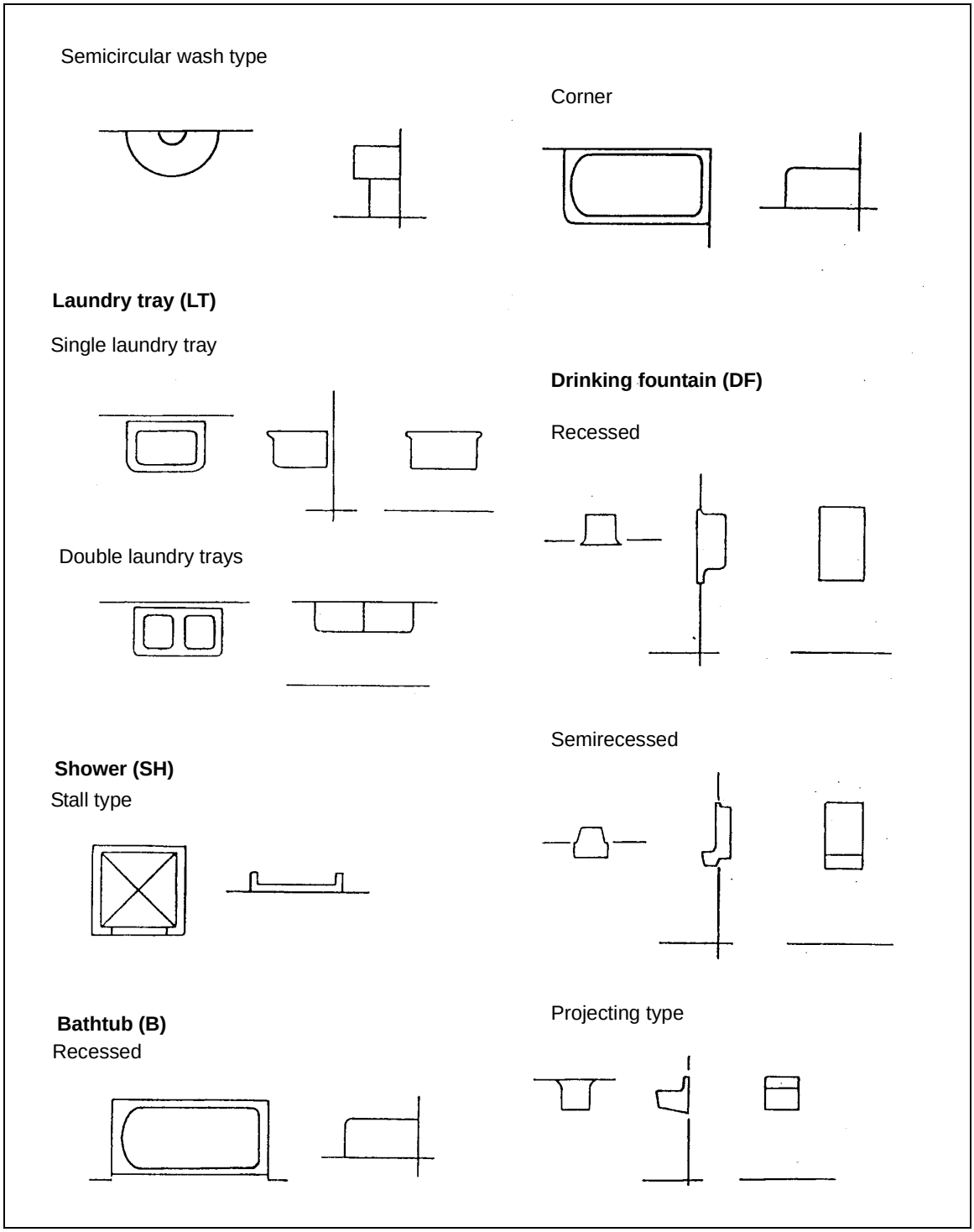

Figure B-12. General Purpose Fixure Symbols (Continued)

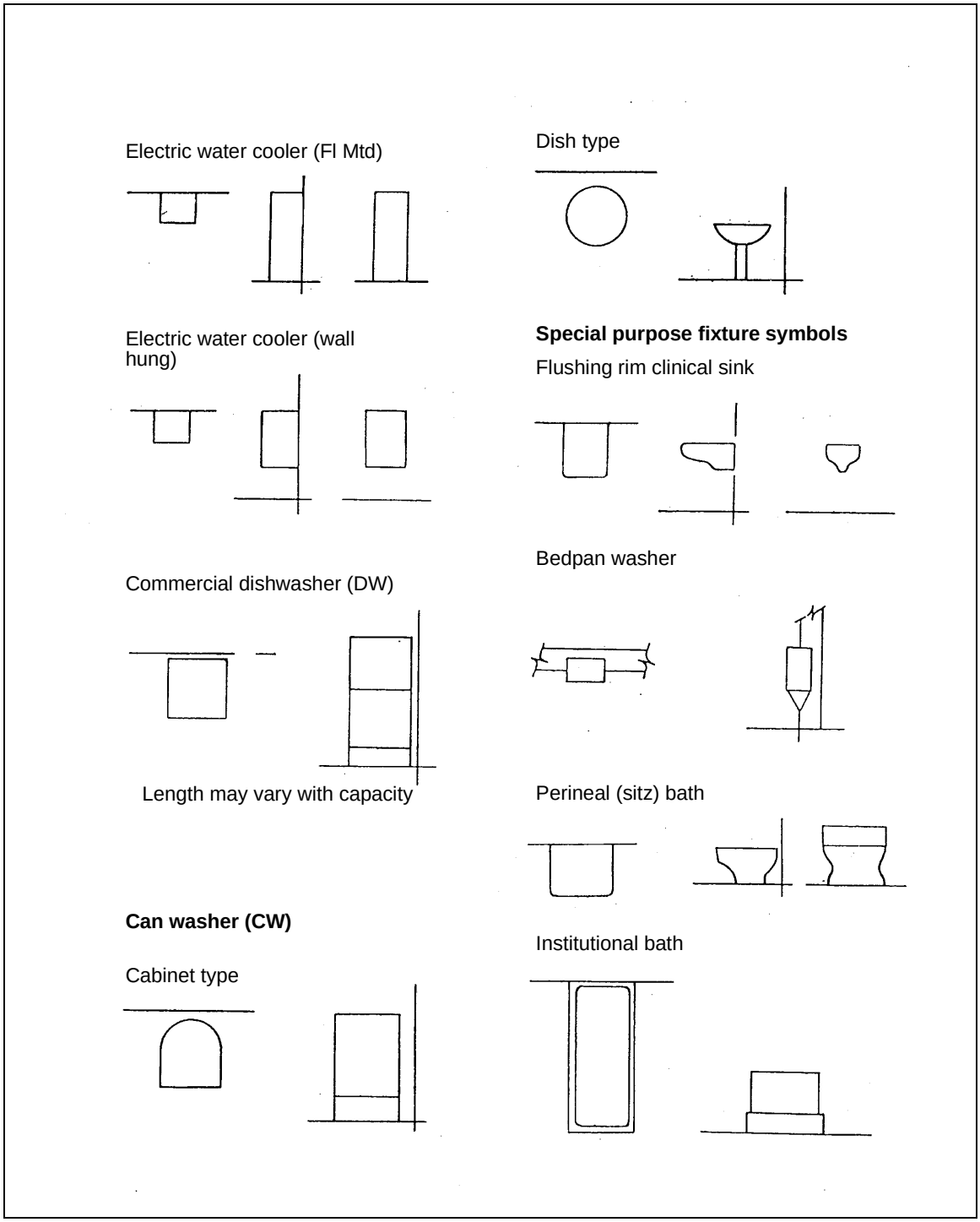

Figure B-12. General Purpose Fixure Symbols (Continued)

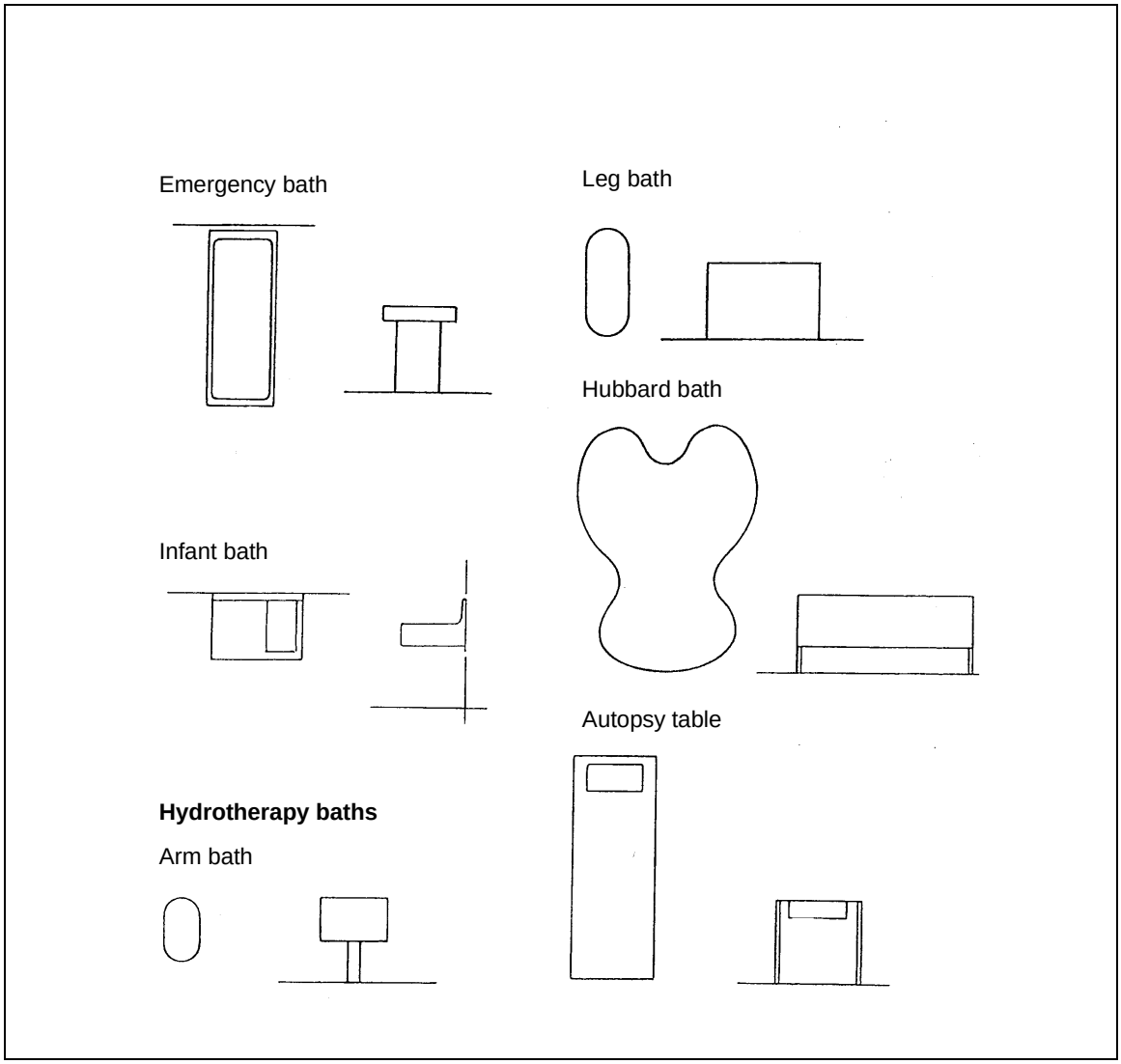

Figure B-12. General Purpose Fixure Symbols (Continued)

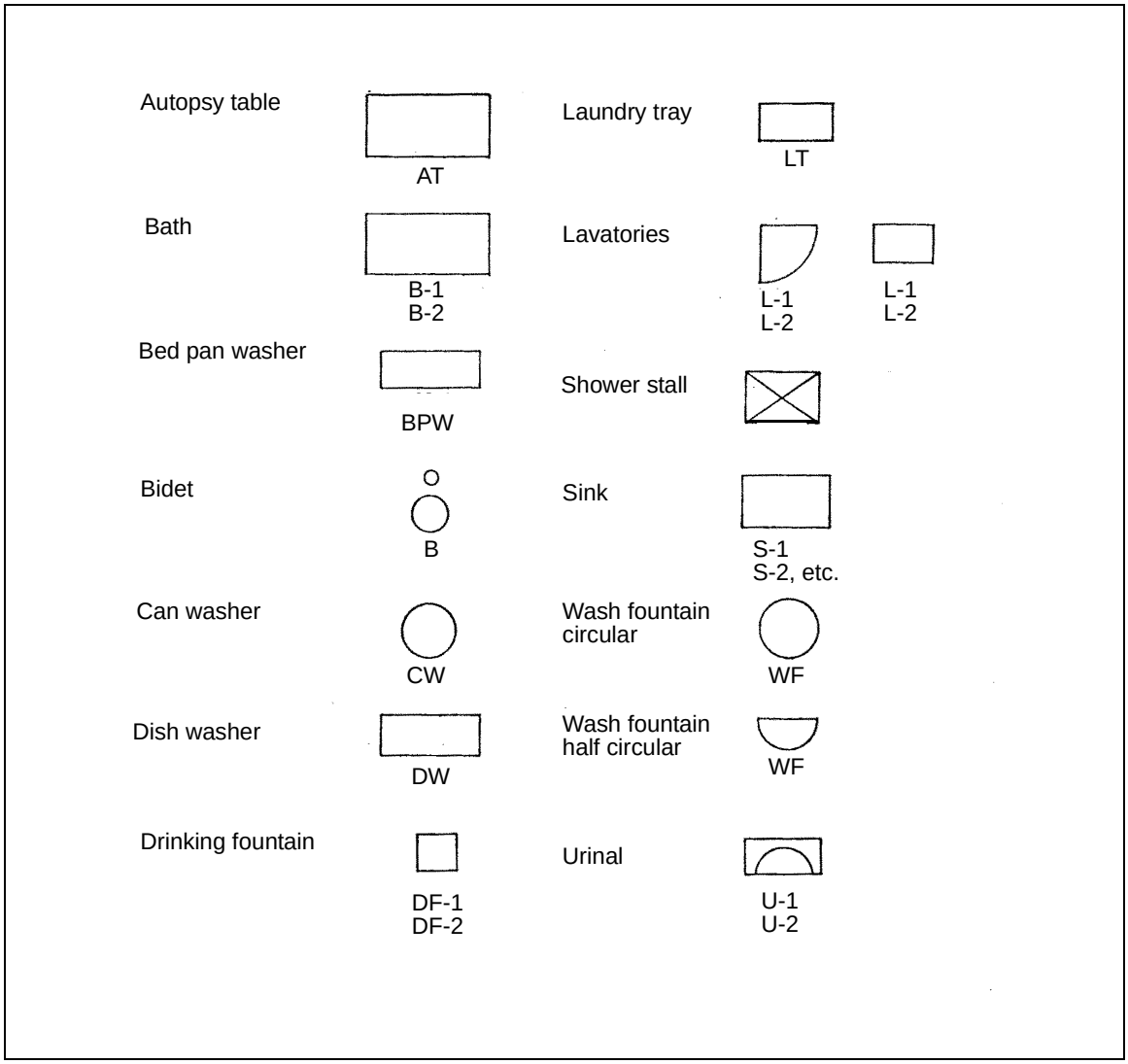

Figure B-13. Plumbing Symbols

Appendix C

BOM

DESCRIPTION

C-1. A BOM is a list of all materials required to finish a structure. It is a tabulated statement that lists the—

- Item number (parts and materials).
- Government stock size and number, if required.
- Item name and description.
- Unit of issue.
- Quantity.
- Weight, as applicable.

C-2. *Table C-1* shows a portion of a BOM for plumbing in a company bathhouse and latrine. For a complete BOM, refer to *TM 5-303*.

Table C-1. Sample BOM for Company Bathhouse and Latrine

Item Number	National Stock Number	Item Name	Unit of Issue	Quantity
1	4410-00-999-5886	Heater, water, oil fired, 600 GPH	each	1
2	4510-00-132-6376	Faucet, single, 3/4-inch normal pipe thread/male (NPT/M), brass, with bib	each	1
3	4510-00-132-6377	Faucet, single, 3/4 inch NPT/M, brass, without bib	each	8
4	4510-00-202-7703	Shower head, 1/2 inch, chrome, fins brass	each	8
5	4510-00-244-9979	Urinal, stationary, 4-foot trough with tank	each	2
6	4510-00-260-1367	Water closet without cover, separate	each	8
7	4510-00-273-1591	Drain floor, cast iron, 6-inch square 2 inch out	each	1

PREPARATION

C-3. The designer or draftsman usually prepares the BOM when he prepares the original drawings. However, if no BOM accompanies the field prints, the plumber must compile it.

C-4. The takeoff list is usually an actual count and checkoff of the items shown or specified on the construction drawings and specifications. The estimate list shows materials, such as nails, cement, lumber, pipe hangers, joint connection materials, and cutting oil, that are not placed on the drawings. The material needs for a project must be calculated from a knowledge of the construction.

C-5. Architectural and engineering plans aid in listing items on the BOM. Use the indicated or scaled dimensions of the building or the utility layouts to determine the dimensions of the items of material. *Figure B-2, page B-4*, shows a plan drawing of a company bathhouse and latrine. Each item on the drawing is checked, listed, and recorded by stock number and size. Definite starting points and procedures are used for each group of materials. For example, starting at the source—

- Trace the cold-water lines and check and record each item.
- Trace the hot-water lines and check and record all the items.
- Determine quantities by listing one material at a time.
- Regroup materials by size, starting with the smallest and progressing to the largest.

Appendix D

Pipe Sizes For Water Distribution System Design

D-1. This appendix contains information to help determine pipe sizes when designing a water distribution system. Use *Table D-1 and Tables D-2 through D-4, pages D-3 through D-6* to determine pipe sizes.

Table D-1. Capacities of Galvanized-Steel/Iron Pipe (in GPM)

	Length of Pipe (in Feet)									
Pressure at Source (psi)	**20**	**40**	**60**	**80**	**100**	**120**	**140**	**160**	**180**	**200**
3/8 Inch										
10	5	3	3	2	2	2				
20	9	5	4	3	3	3	2	2	2	2
30	10	6	5	4	4	3	3	3	3	2
40		8	6	5	4	4	4	3	3	3
50		9	7	6	5	4	4	3	3	3
60		9	7	6	6	5	5	4	4	4
70		10	8	7	6	6	5	5	4	4
80			8	7	7	6	5	5	5	4
1/2 Inch										
10	10	8	5	5	4	3	3	3	3	3
20	14	10	8	6	6	5	5	4	4	4
30	18	12	10	8	8	7	6	6	5	5
40	20	14	11	10	10	8	7	7	6	6
50		16	13	11	11	9	8	7	7	7
60		18	14	12	12	10	9	9	8	7
70			15	13	12	11	10	9	8	8
80										
3/4 Inch										
10	22	14	12	10	8	8	7	6	6	6
20	30	22	18	14	12	12	11	10	10	8
30	38	26	22	18	16	14	13	12	12	10
40		30	24	21	19	17	16	16	15	13
50		34	28	24	21	19	18	17	16	15
60		38	31	26	23	21	20	19	18	17
70			34	29	25	23	22	21	19	18
80			36	30	27	24	23	22	21	20

Table D-1. Capacities of Galvanized-Steel/Iron Pipe (in GPM) (Continued)

Length of Pipe (in Feet)										
Pressure at Source (psi)	**20**	**40**	**60**	**80**	**100**	**120**	**140**	**160**	**180**	**200**
1 Inch										
10	40	28	22	18	16	15	14	13	12	11
20	55	40	32	27	24	22	20	19	18	16
30	70	50	40	34	30	27	25	23	22	20
40	80	58	45	40	35	32	29	27	25	24
50		65	57	45	40	36	33	31	29	27
60		70	58	50	44	40	36	34	32	30
70		76	63	54	45	42	40	37	34	32
80			65	57	47	43	39	37	35	33
1 1/4 Inch										
10	80	55	45	37	35	30	27	25	26	24
20	110	80	65	55	50	45	41	38	36	34
30		100	80	70	60	56	51	47	45	42
40			95	80	72	65	60	56	52	50
50			107	92	82	74	68	63	60	55
60				102	90	81	75	70	65	62
70					97	88	82	74	69	67
80					105	95	87	79	74	72
1 1/2 Inch										
10	120	90	70	60	55	50	45	40	40	35
20	170	130	100	90	75	70	65	60	55	55
30		160	130	110	100	90	80	75	70	65
40		170	150	130	110	100	90	90	80	80
50			170	140	130	120	110	100	90	90
60				160	140	130	120	110	100	100
70				170	150	140	130	120	110	100
80					160	150	140	130	120	110
2 Inch										
10	240	160	130	110	100	90	90	80	80	70
20	300	240	200	160	150	140	130	120	110	100
30		300	240	200	180	160	150	140	140	130
40			380	240	220	200	180	160	160	150
50				280	240	220	200	200	180	160
60					280	240	220	200	200	180
70					300	260	240	220	220	200
80						280	260	240	220	220

Table D-2. Capacities of Copper Tubing and Plastic Pipe (in GPM)

Length of Pipe (in Feet)										
Pressure at Source (psi)	**20**	**40**	**60**	**80**	**100**	**120**	**140**	**160**	**180**	**200**
1/2 Inch										
10	8	5	4	3	3	2	2	2	2	2
20	12	8	6	5	5	4	4	3	3	3
30	15	10	8	7	6	5	5	4	4	4
40	17	12	9	8	7	6	6	5	5	4
50		14	10	9	8	7	6	6	5	5
60		15	12	10	9	8	7	7	6	6
70			13	11	10	9	8	7	7	6
80			14	12	10	10	8	8	7	7
5/8 Inch										
10	12	8	7	6	5	5	4	4	3	3
20	18	12	10	9	7	6	6	5	5	5
30	22	16	12	10	9	9	8	7	6	6
40	26	18	14	12	10	10	9	8	8	7
50		22	16	14	12	11	10	9	9	8
60		24	18	16	14	13	12	11	10	9
70			20	18	15	14	13	12	11	10
80			22	19	16	15	14	13	12	11
3/4 Inch										
10	20	14	10	10	8	8	6	6	6	5
20	30	20	16	14	12	10	10	10	8	8
30	36	26	20	17	15	14	13	11	10	8
40		30	24	20	18	16	15	14	13	12
50		34	28	24	20	18	16	16	14	14
60		36	30	26	22	20	18	18	16	16
70			32	28	24	22	20	18	18	16
80			36	30	26	24	22	20	18	18
1 Inch										
10	50	30	24	20	18	16	14	14	12	12
20	70	45	36	30	26	24	22	20	18	18
30	80	55	45	38	34	30	28	26	24	22
40		65	55	45	40	36	32	30	28	26
50		75	60	50	45	40	36	34	32	30
60		80	66	55	50	45	40	38	36	34
70			70	60	55	50	45	40	38	36
80			80	65	60	50	50	45	40	40

Table D-2. Capacities of Copper Tubing and Plastic Pipe (in GPM) (Continued)

Length of Pipe (in Feet)										
Pressure at Source (psi)	**20**	**40**	**60**	**80**	**100**	**120**	**140**	**160**	**180**	**200**
1 1/4 Inch										
10	80	55	42	37	32	30	27	25	22	22
20	110	80	65	55	47	42	40	35	35	32
30		105	80	70	60	55	50	45	44	40
40		110	95	80	70	65	60	55	50	47
50			110	90	80	70	65	60	57	55
60				105	90	80	75	70	65	60
70				110	100	90	80	75	70	65
80					105	95	85	80	75	70
1 1/2 Inch										
10	130	90	70	60	50	45	40	40	35	35
20	170	130	100	90	75	70	65	60	55	50
30		170	130	110	100	90	80	75	70	65
40			155	130	115	105	95	88	80	77
50			170	150	130	120	108	100	90	88
60				165	145	130	120	110	105	98
70				170	160	142	130	122	113	106
80					170	155	140	130	122	115
2 Inch										
10	280	180	150	145	110	100	90	85	80	70
20	320	280	220	190	165	160	140	125	120	110
30		320	280	240	210	180	170	160	150	140
40			320	280	240	220	200	190	175	160
50				320	280	250	230	210	200	190
60					300	280	260	240	220	200
70					320	300	280	260	240	230
80						320	300	280	260	240

Table D-3. Allowance for Equivalent Length of Pipe for Friction Loss (Valve and Threaded Fittings)

Diameter of Fitting (in Inches)	90° Standard Elbow, Foot	45° Standard Elbow, Foot	90° Side T, Foot	Coupling of Straight Run of T, Foot	Gate Valve, Foot	Globe Valve, Foot	Angle Valve, Foot
	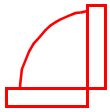		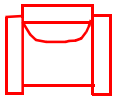	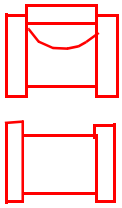		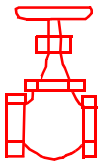	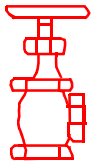
3/8	1.0	0.6	1.5	0.3	0.2	8	4
1/2	2.0	1.2	3.0	0.6	0.4	15	8
3/4	2.5	1.5	4.0	0.8	0.5	20	12
1	3.0	1.8	5.0	0.9	0.6	25	15
1 1/4	4.0	2.4	6.0	1.2	0.8	35	18
1 1/2	5.0	3.0	7.0	1.5	1.0	45	22
2	7.0	4.0	10.0	2.0	1.3	55	28
2 1/2	8.0	5.0	12.0	2.5	1.6	65	34
3	10.0	6.0	15.0	3.0	2.0	80	40
3 1/2	12.0	7.0	18.0	3.6	2.4	100	50
4	14.0	8.0	21.0	4.0	2.7	125	55
5	17.0	10.0	25.0	5.0	3.3	140	70
6	20.0	12.0	30.0	6.0	4.0	165	80

Table D-4. Head Loss, Equivalent Length of Pipe (in Feet)

	Ordinary Entrance	Sudden Enlargement			Sudden Contraction		
		d1 D4	d1 D2	d3 D4	d1 D4	d1 D2	d3 D4
Size of Pipe d (in inches)	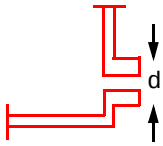	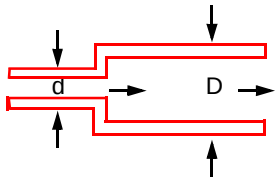			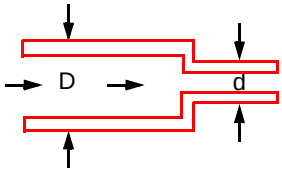		
1/2	0.90	1.50	1.10	1.00	0.77	0.59	0.35
3/4	1.20	2.20	1.40	1.30	1.00	0.79	0.47
1	1.50	2.70	1.70	1.60	1.30	0.99	0.60
1 1/4	2.00	3.70	2.40	2.20	1.60	1.30	0.80
1 1/2	2.40	4.30	2.80	2.60	2.00	1.50	0.95
2	3.00	5.50	3.50	3.20	2.50	1.90	1.20
2 1/2	3.60	6.50	4.20	3.90	3.00	2.30	1.40
3	4.50	8.10	5.10	4.90	3.80	2.80	1.70
3 1/2	5.10	9.50	6.00	5.60	4.40	3.30	2.00
4	6.00	11.00	7.00	6.50	5.00	3.80	2.30
4 1/2	6.60	12.00	7.90	7.10	5.50	4.30	2.60
5	7.50	14.00	8.90	8.10	6.10	4.80	2.90
6	9.00	16.00	11.00	10.00	7.70	5.70	3.50
8	12.00	21.00	14.00	13.00	10.00	7.60	4.50
10	15.00	26.00	17.00	16.00	13.00	9.70	5.70
12	18.00	32.00	20.00	19.00	15.00	11.00	6.70

D-2. Refer to *Figures D-1 through D-5, pages D-7 through D-11*, to design and draw a water service line. These figures can also be used to determine pipe sizes.

D-3. Use the following steps and *Figure D-1* to determine the size of the pipe, the velocity, and the friction loss from Point A to Point B:

Step 1. Locate the number along the bottom of the chart.

Step 2. Locate the flow rate in GPM demand along the left side of the chart, using the GPM demand from Step 1.

Step 3. Proceed to the right from the GPM scale and up from the bottom.

Step 4. Locate the point at which these two values intersect. From this point, read left and stop at the first pipe size selection line. This is the size of pipe needed.

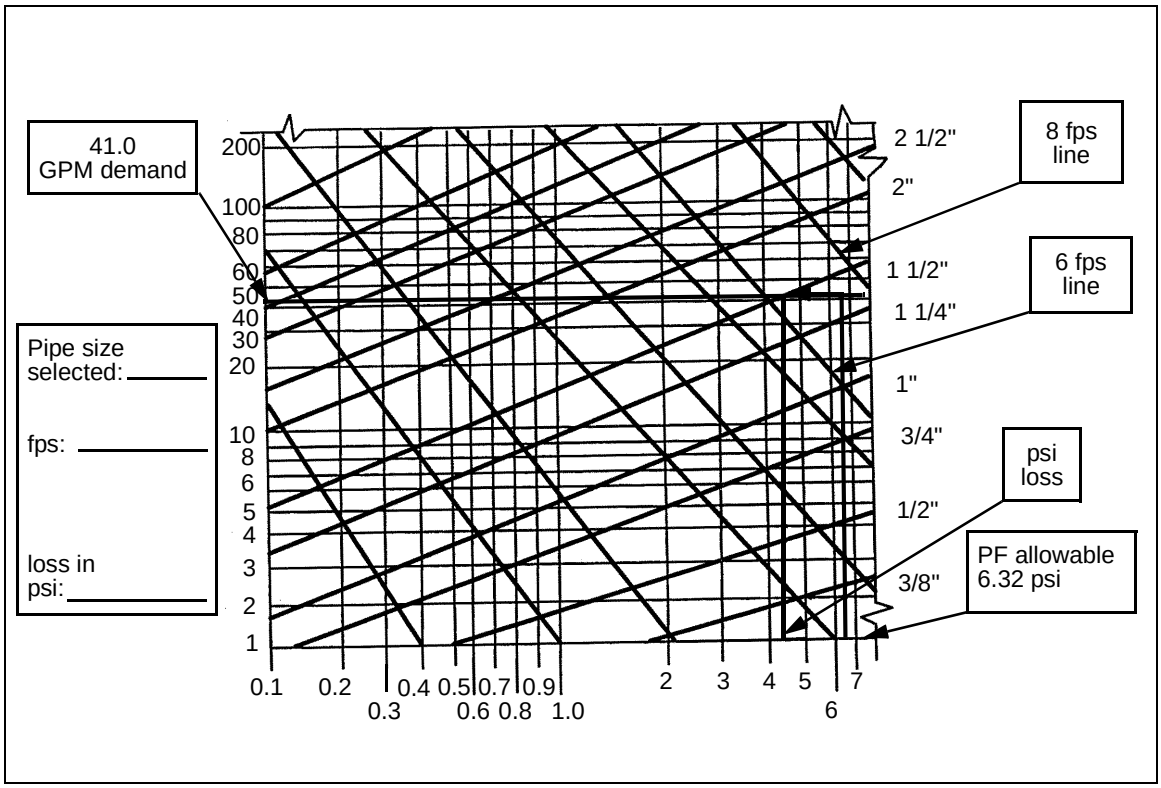

Figure D-1. Friction Loss Using a Fairly Smooth Pipe

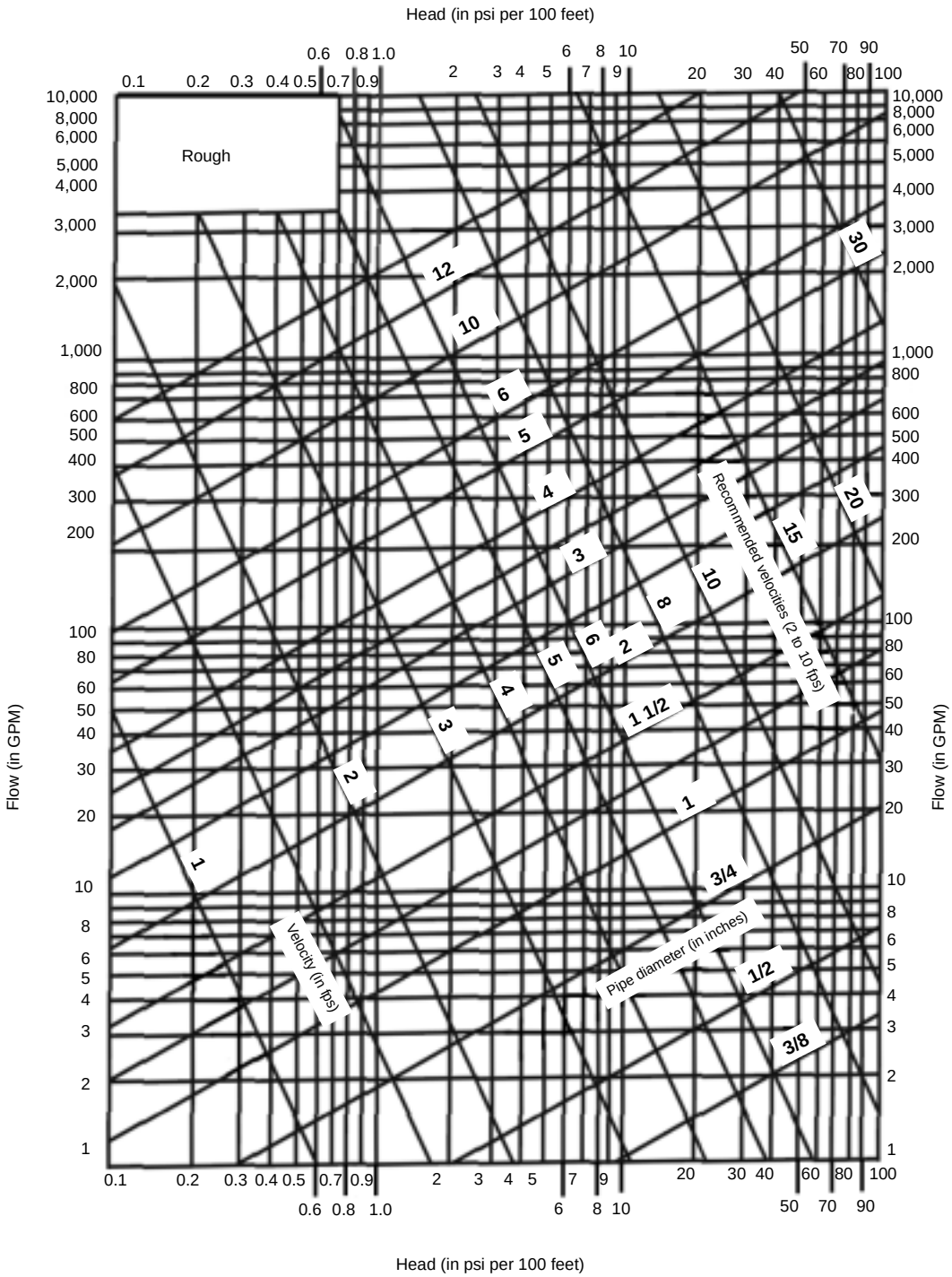

Figure D-2. Friction Loss, Rough Pipe

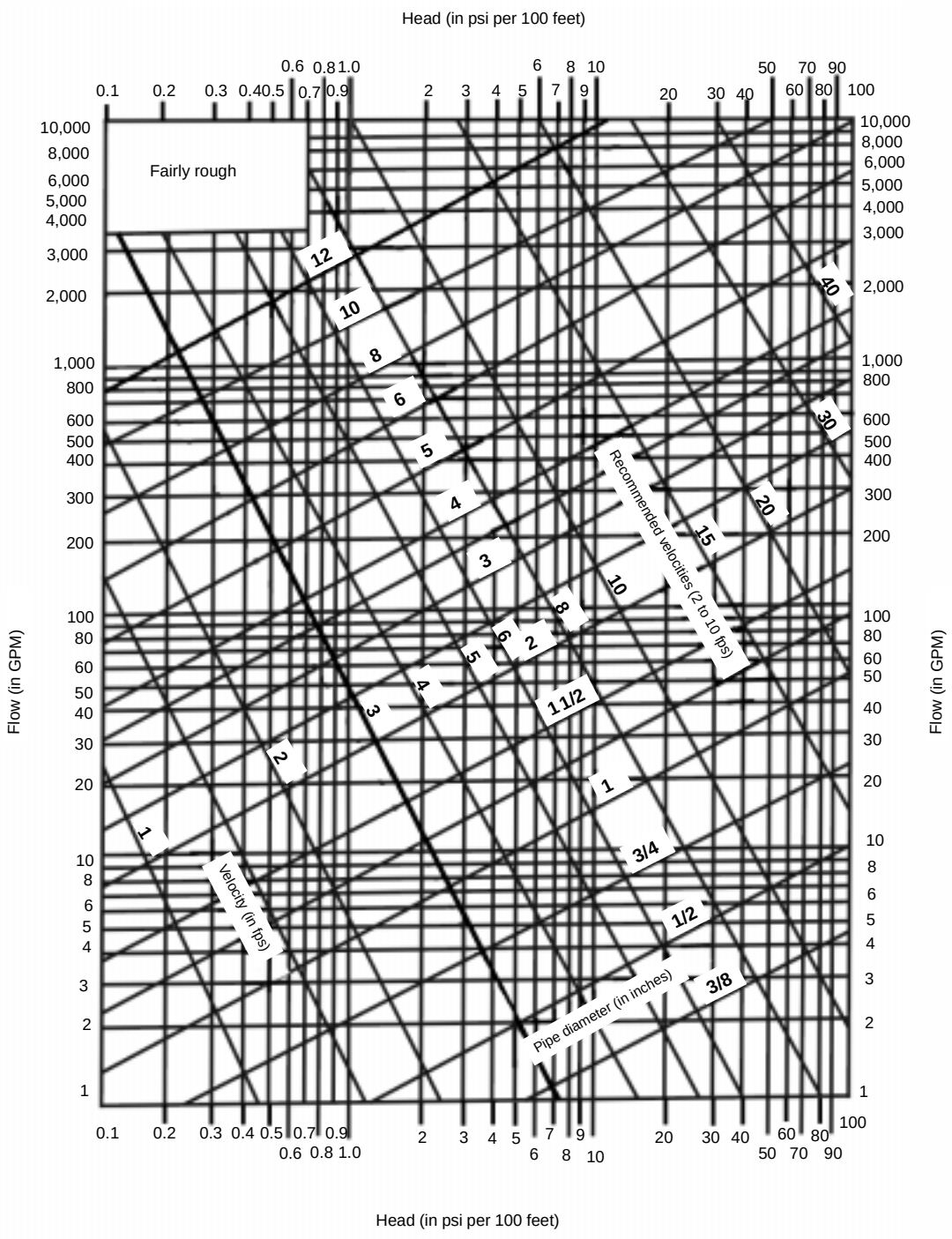

Figure D-3. Friction Loss, Fairly Rough Pipe

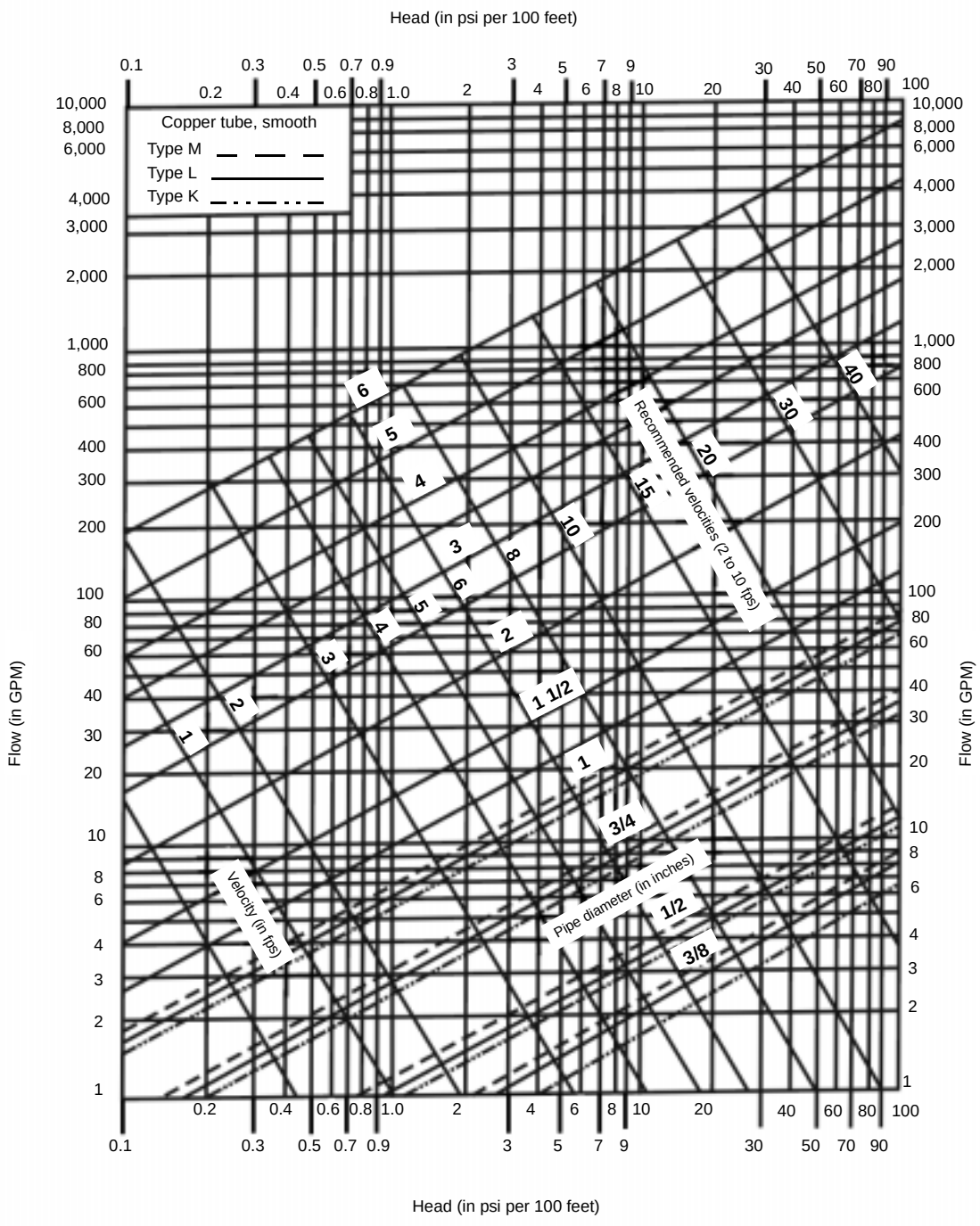

Figure D-4. Friction Loss, Smooth Pipe

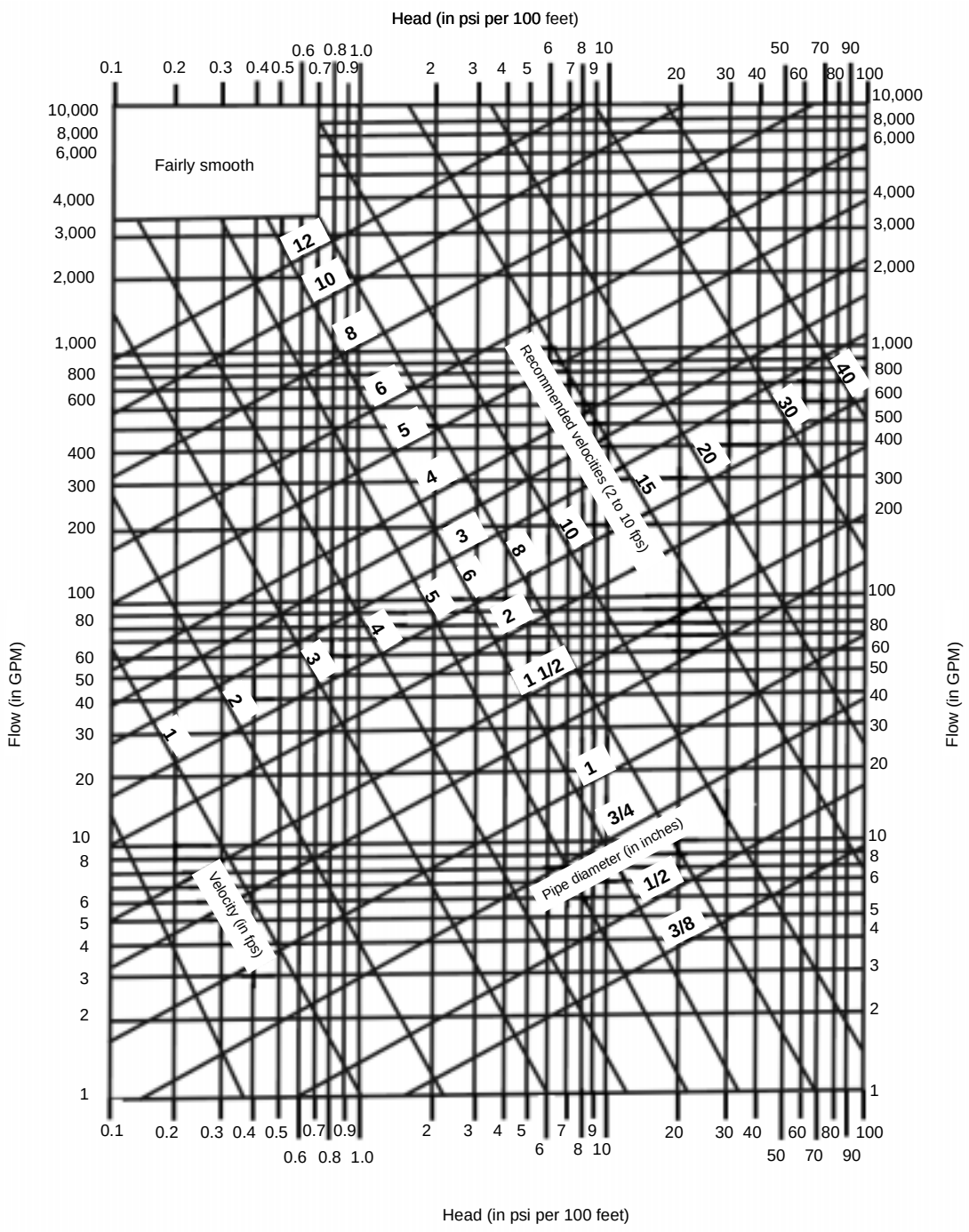

Figure D-5. Friction Loss, Fairly Smooth Pipe

Appendix E

Distribution Systems Design Procedures

DESIGN PROCEDURES

BASIC CONCEPTS

E-1. Water weighs 62.4 pounds per cubic ft (lb/ft^3)

Pressure

E-2. Pressure (P) is an expression, in psi (lb/in^2), of the total gravitational force (lb) exerted at the base of an imaginary 1-inch square (in^2) column of water—thus psi—of any column height or head (H) in feet (*Figure E-1*).

$$P(lbs/in^2) = \frac{62.4 lb/ft^3}{144 in^2/ft^2} \times H(ft); \quad P = 0.433H$$

So, for example, for a 10-foot column, or head of water (H) the pressure would be:

$$P(lbs/in^2) = \frac{62.4 lb/ft^3}{144 in^2/ft^2} \times 10(ft); \quad P = 0.433(10) = 4.33\ psi$$

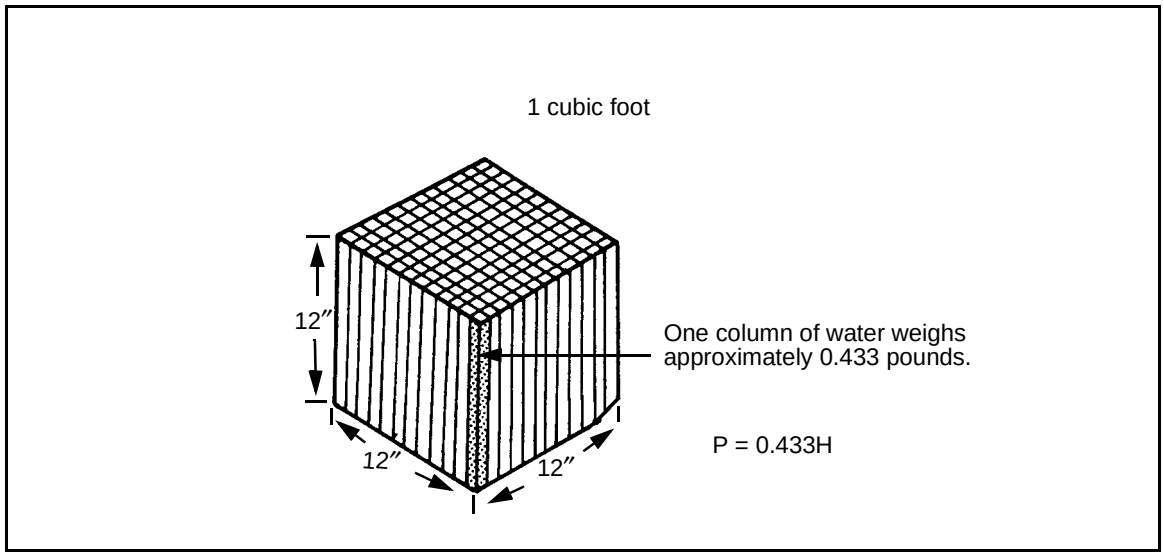

Figure E-1. Water Pressure

Head

E-3. Conversely, "head" is another way to express the same total force exerted by the same column of water, expressed in feet.

From E-2:

$$P(psi) = 0.433H(ft) \quad \text{so}$$

$$H(ft) = \frac{P(psi)}{0.443} \quad or \quad H = 2.31P \quad \text{where } P = \text{pressure in psi}$$

(Note: for any other liquid, the constant of 0.443 would change with any change in density).

So, for example, for a pressure of 4.33 psi, the head would be:

$$H = 2.31P \quad or \quad 2.31(4.33) = 10 \text{ foot head}$$

Another way to express this is "a 10-foot head of pressure" which is actually 4.33 psi.

E-4. **Static Head**. Static head is the height of a fluid at rest (no flow) (*Figure E-2*).

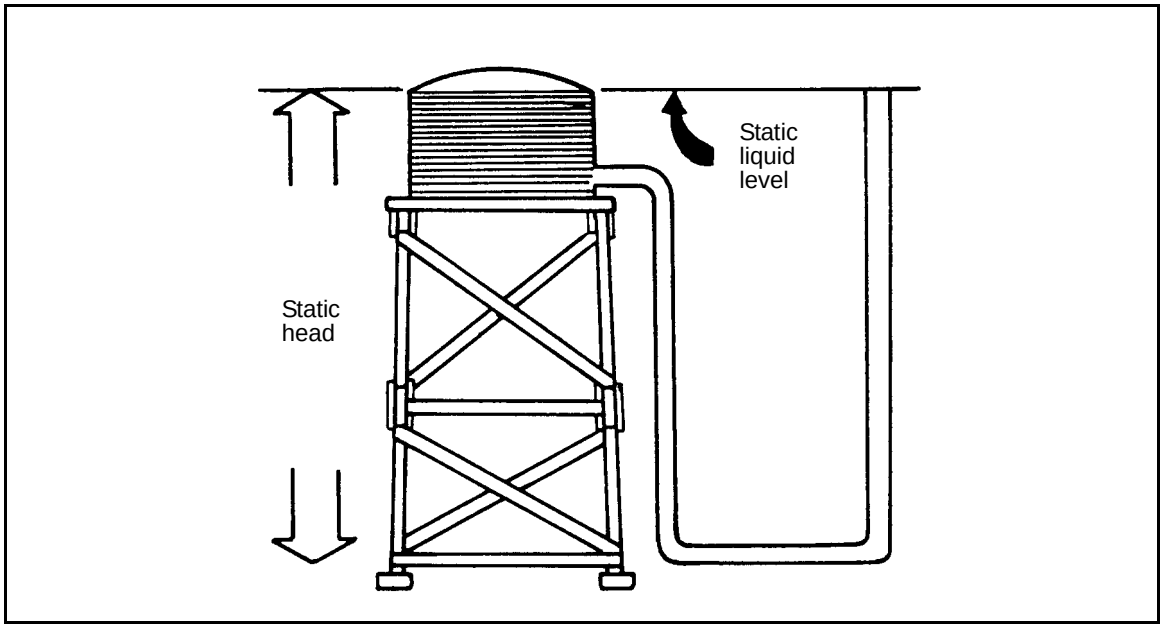

Figure E-2. Static Head

E-5. **Dynamic Head**. Dynamic head is static head minus the friction loss of a flowing liquid, expressed in feet (*Figure E-3*). It is also known as free-water surface (FWS) elevation.

Dynamic head = Static head - Friction loss

DEFINITIONS

E-6. Use the following definitions to identify equations:

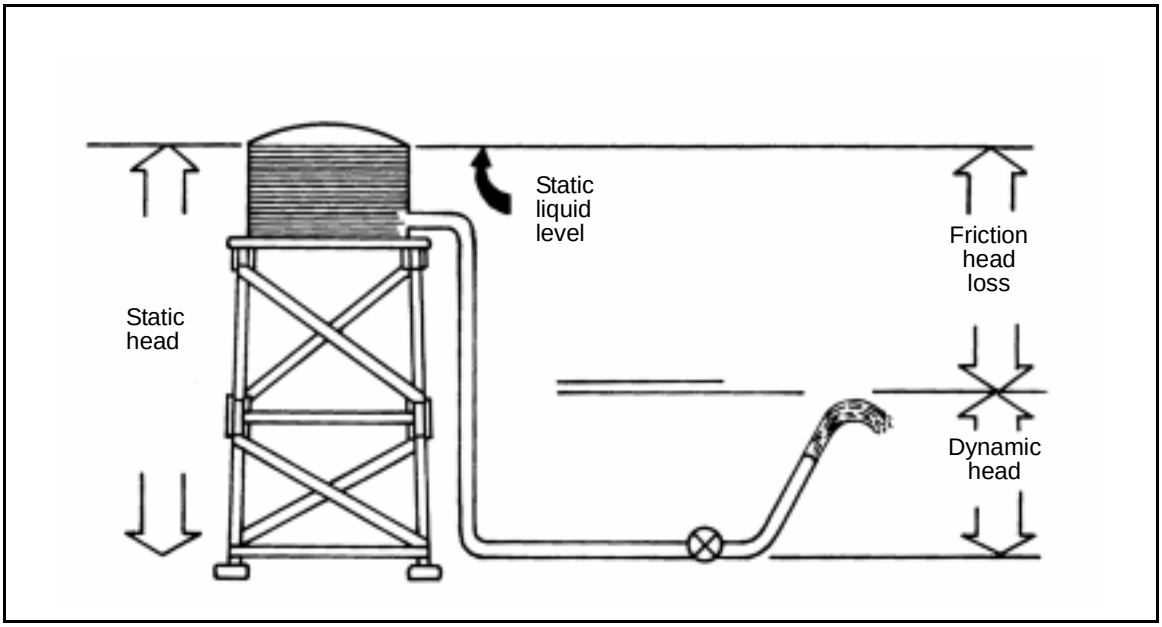

Figure E-3. Relation of Static and Dynamic Heads

- $Pf_{allowable}$ The maximum pressure that can be lost from all sources of friction without falling below the required service-connection pressure. (Minimum service-connection pressure in the TO is 20 psi.)
- Pf_{actual} The pressure loss from all sources of friction in a pipe segment.
- $PF_{allowable}$ The allowable pressure loss in a 100-foot section.
- PF_{actual} The actual pressure loss in a 100-foot section.
- *Equivalent Length (EL).* The length of a fitting or valve expressed in feet of straight pipe that produces the same amount of friction loss.
- *Pressure at Service Connection (PSC).* The actual pressure that will be provided to the user (building or facility).

DYNAMIC WATER DISTRIBUTION SYSTEM DESIGN

E-7. Dynamic water distribution systems are designed using the procedures below. When working the two examples that follow, refer back to the procedures below.

DESIGN PROCEDURES

E-8. Use the following steps to perform design procedures:

Step 1. Determine the quantity (Q) of the flow rate, in GPM.

Step 2. Determine $Pf_{allowable}$ for each line.

$Pf_{allowable} = H(E_1 - E_2) - \textit{required pressure}$

where —

$Pf_{allowable}$ = *allowable pressure loss, in psi*

H = height (0.433)

E1 = higher elevation, in feet

E2 = lower elevation, in feet

Step 3. Determine the pipe length (in feet).

Step 4. Determine $PF_{allowable}$ in a 100-foot section of pipe.

$$PF_{allowable} = \frac{Pf_{allowable}}{\text{total system length}} \times 100'$$

where —

$PF_{allowable}$ = *allowable pressure loss in a 100-foot pipe section, in psi*

$Pf_{allowable}$ = *allowable pressure loss, in psi*

The total system length is in feet.

Find the fluid's actual velocity, which should be between 2 and 10 fps, and find PF_{actual} (from *Figures D-1 to D-5, pages D-7 through D-11*).

Step 5. Determine the size of the pipe and the velocity, and PF_{actual} (from *Tables D-3 and D-4, pages D-5 through D-6*).

Step 6. Determine Pf_{actual}

$$Pf_{actual} = \frac{PF_{actual}}{100'} \times \text{system length}$$

where —

Pf_{actual} = actual pressure loss from all sources, in psi

PF_{actual} = actual pressure loss in a 100-foot pipe section, in psi

System length is in feet.

Step 7. Determine the equivalent pipe length (EL) for fittings. Go back to *Step 4* and recalculate $PF_{allowable}$. If the pipe size changes in the appropriate friction loss table (*Figure D-1 through D-5, pages D-7 through D-11*), then find the new velocity and PF_{actual} from *Figures D-1 through D-4*. EL is negligible if there is 1,000 feet or more between fittings.

Step 8. Determine *free-water surface (FWS)* elevation.

$$FWS = E_{BT} - (H \times Pf_{actual})$$

where —

FWS = *free water surface, in feet*

E_{BT} = *elevation at bottom of the tank, in feet*

H = *height or head (constant 2.31)*

Pf_{actual} = *actual pressure factor (from Step 6), in psi*

Step 9. Determine the pressure at the service connection.

$$P_{SC} = H(E_{BT} - E_{SC}) - Pf_{actual}$$

where —

P_{SC} = *pressure at the servicice connection, in psi*

H = *height (0.433)*

E_{BT} = *elevation at bottom of the tank, in feet*

E_{SC} = *elevation at the service connection, in feet*

EXAMPLE - WATER LINE DESIGN 1

E-9. Use the following steps as an example to design a water line:

Step 1. Determine the required Q from the tank to A.

Q = *230 GPM (Figure E-4)*

Step 2. Determine $Pf_{allowable}$

$Pf_{allowable} = H(E1 - E2)$ - *required pressure*

$0.433(135 - 70)$ - $20 = 8.14$ *psi*

Step 3. Determine the pipe length. Pipe length given is 1,300 feet (*Figure E-4*).

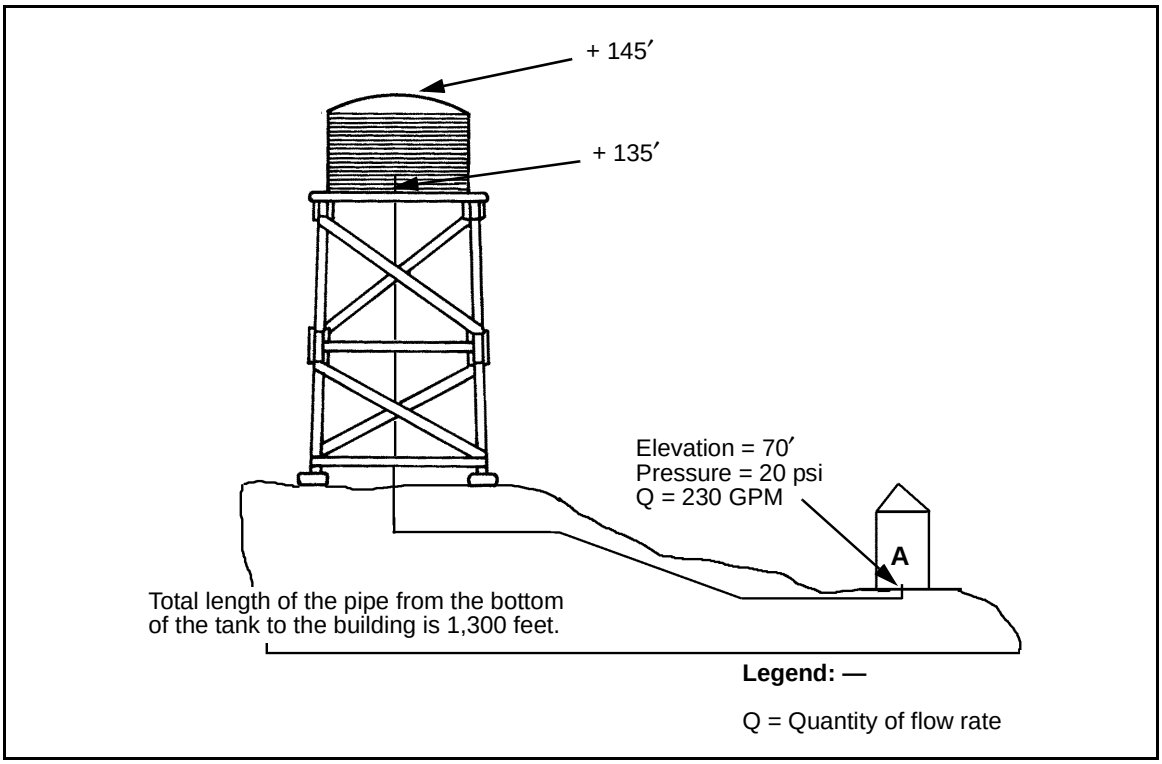

Figure E-4. Water Line, Design 1

Step 4. Determine $Pf_{allowable}$ in a 100-foot section.

$$PF_{allowable} = \frac{Pf_{allowable}}{total\ system\ length} \times 100'$$

$$\frac{8.14}{1,300'} \times 100' = 0.63\ psi$$

Step 5. Select a 6-inch diameter pipe and a velocity of 2.6 fps (intersection of selected pipe and Q). See *Figure D-3, page D-9*.

Step 6. Determine Pf_{actual}

$$Pf_{actual} = \frac{PF_{actual}}{100'} \times system\ length$$

$$\frac{0.29}{100'} \times 1,530.5' = 4.44\ psi$$

Step 7. Determine the EL. EL is 230.5 feet (refer to *page E-4, Step 7*).

Step 8. Not applicable.

Step 9. Determine the pressure at the service connection.

$$P_{sc} = H(E_{BT} - E_{SC}) - Pf_{actual}$$

$$0.433(135 - 70) - 4.44 = 23.7\ psi$$

EXAMPLE - WATER LINE DESIGN 2

E-10. Use the following steps as an example to design a water line:

Step 1. Determine Q from Tank to A.

$Q = Q_B + Q_C$ (Use *Table E-1* to find the fixture unit (FU) values and *Table E-2* to find flow rate quantity (Q) demands.)

Table E-1. Fixture Unit Values

Type of Fixture	Fixture Unit Value
Water closet (flush valve)	10.0
Water closet (flush valve)	5.0
Urinal (1-inch flush valve)	10.0
Urinal (3/4-inch flush valve)	5.0
Shower head	4.0
Kitchen sink	4.0
Lavatory (bathroom) sink	2.0
Service (stop) sink	3.0
Laundry tub (dishwasher)	3.0
Laundry (wash) machine, 8 pounds	3.0
Laundry (wash) machine, 16 pounds	4.0
Water fountain	0.25

NOTES:

1. If the type of water closet is not specified, the TO standard for water closets is with a flush valve (fixture unit valve = 10.0).
2. If the type of urinal is not specified, the TO standard for urinals is with a 3/4-inch flush valve (fixture unit valve = 5.0).

Table E-2. Flow Rate Quantity Demands

Supply System Predominantly for Flush Tanks		Supply System Predominantly for Flushometers	
Load (in Water Supply Fixture Units)	Demand (in GPM)	Load (in Water Supply Fixture Units)	Demand (in GPM)
6	5.0		
8	6.5		
10	8.0	10	27.0
12	9.2	12	28.6
14	10.4	14	30.2
16	11.6	16	31.8
18	12.8	18	33.4
20	14.0	20	35.0
25	17.0	25	38.0
30	20.0	30	41.0
35	22.5	35	43.8
40	24.8	40	46.5
45	27.0	45	49.0
50	29.0	50	51.5
60	32.0	60	55.0
70	35.0	70	58.5
80	38.0	80	62.0
90	41.0	90	64.8
100	43.5	100	67.5
120	48.0	120	72.5
140	52.5	140	77.5
160	57.0	160	82.5
180	61.0	180	87.0
200	65.0	200	91.5
225	70.0	225	97.0
250	75.0	250	101.0
275	80.0	275	105.5
300	85.0	300	110.0
400	105.0	400	126.0
500	125.0	500	142.0
750	170.0	750	178.0
1,000	208.0	1,000	208.0
1,250	240.0	1,250	240.0
1,500	267.0	1,500	267.0
1,750	294.0	1,750	294.0
2,000	321.0	2,000	321.0
2,250	348.0	2,250	348.0
2,500	375.0	2,500	375.0
2,750	402.0	2,750	402.0
3,000	432.0	3,000	432.0
4,000	525.0	4,000	525.0
5,000	593.0	5,000	593.0
6,000	643.0	6,000	643.0
7,000	685.0	7,000	685.0
8,000	718.0	8,000	718.0

$$FU = WC(FU) + UR(FU)$$

$$FU_B = 1(10) + 2(10) = 30\ FU;\ therefore,\ Q_B = 41\ GPM$$

$$FU_C = 10(10) + 4(10) = 140FU;\ therefore\ Q_C = 775\ GPM$$

$$Q = 41 + 77.5 = 118.5\ GPM$$

NOTE: The elevation at the bottom of the tank is used. This corresponds to the minimum (worst-case) operating pressure.

Step 2. Determine $Pf_{allowable}$

$$Pf_{allowable} = H(E_1 - E_2) - required\ pressure$$

$$Tank\ to\ B:\ 0.433(145 - 85) - 20\ psi = 5.98\ psi$$

$$Tank\ to\ C:\ 0.433(145 - 70) - 20\ psi = 12.48\ psi$$

Step 3. Determine the pipe length (*Figure E-5*).

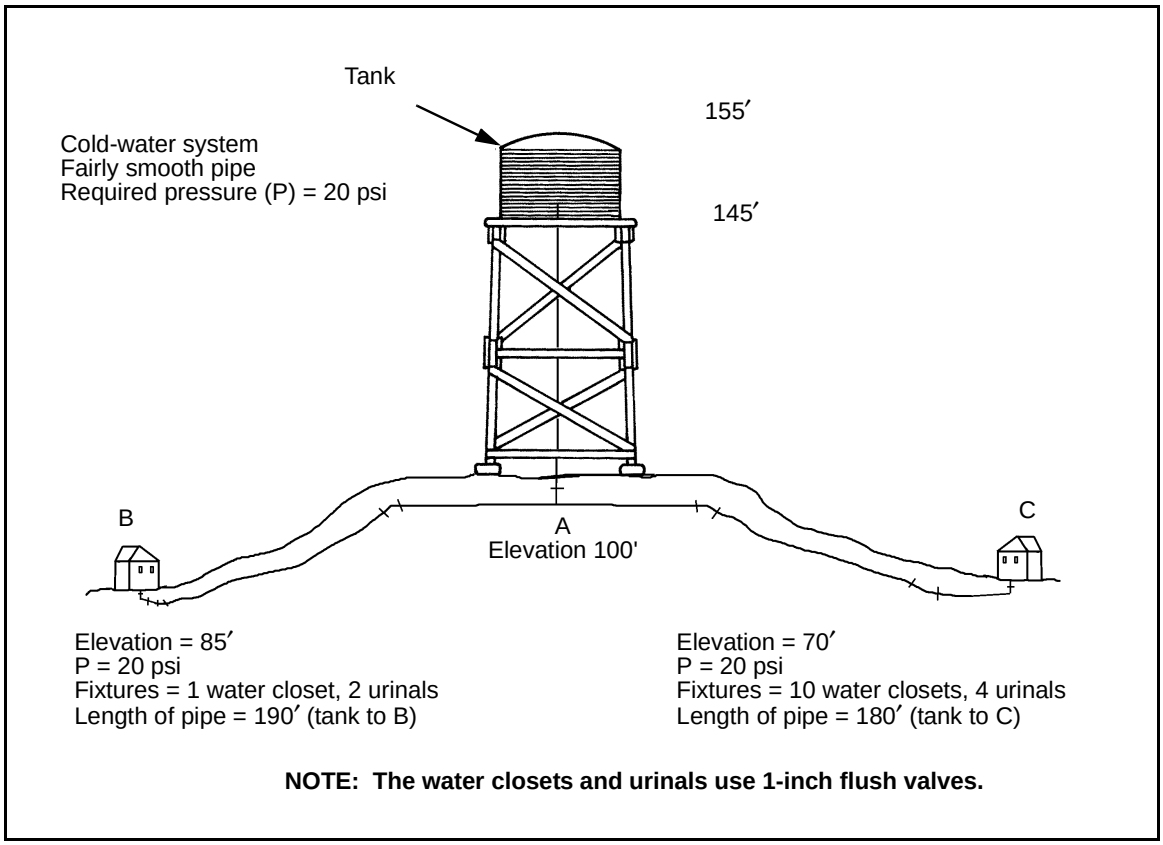

Figure E-5. Water Line, Design 2

Step 4. Determine $PF_{allowable}$ in a 100-foot section.

$$PF_{allowable} = \frac{Pf_{allowable}}{total\ system\ length} \times 100'$$

$$Tank\ to\ B: \frac{5.98}{190} \times 100' = 3.14\ psi$$

$$Tank\ to\ C: \frac{12.48}{180} \times 100' = 6.93\ psi$$

Select that portion of the water line that allows for the least amount of pressure loss ($PF_{allowable}$). In this example, Tank to B is the smallest.

PF_{actual} for Tank to C is 1.7 psi (*Figure D-4, page D-6*).

Step 5. Select a 3-inch diameter pipe and a velocity of 5.0 fps (intersection of selected pipe and Q) (*Figure D-4*).

Step 6. Determine Pf_{actual}

$$Pf_{actual} = \frac{PF_{actual}}{100'} \times system\ length$$

$$Tank\ to\ A: \frac{1.7}{100'} \times 45 = 0.77\ psi\ lost$$

Step 7. Not applicable.

Step 8. Determine the FWS elevation for the tank to A.

$$FWS_A = E_{BT} - (H \times PF_{actual})$$

$$145 - (2.31 \times 1.7) = 141\ feet$$

Step 9. Not applicable.

DESIGN A TO C

E-11. Use the following steps when performing Design A to C:

Step 1. Determine Q from A to C.

$$Q_C = 77.5\ (from\ Step\ 1,\ Example\ Water\ Line\ Design\ 2)$$

Step 2. Determine $Pf_{allowable}$

$$Pf_{allowable} = H(E_1 - E_2) - required\ pressure$$

$$0.433(143 - 70) - 20\ psi = 11.6\ psi$$

Step 3. Determine the length of the pipe (*Figure E-5*).

$$Total\ length = length\ T\ to\ C - length\ T\ to\ A$$

$$180' - 45' = 135'$$

Step 4. Determine $PF_{allowable}$ in a 100-foot section.

$$PF_{allowable} = \frac{Pf_{allowable}}{total\ system\ length} \times 100'$$

$$\frac{11.6}{135'} \times 100' = 8.6\ psi$$

Step 5. Select a 2-inch diameter pipe and a velocity of 7.6 fps (intersection of selected pipe and Q).

Step 6. EL for A to C is 28.4.

Step 7. Determine $PF_{allowable}$ in a 100-foot section.

$$A\ to\ C:\ \frac{11.6}{135' + 28.4'} \times 100' = 7.09\ psi$$

Step 8. Determine Pf_{actual}

$$Pf_{actual} = \frac{PF_{actual}}{100'} \times system\ length$$

$$\frac{5.3}{100'} \times 163.4 = 8.66\ psi$$

Step 9. Determine FWS. FWS_A = 143 feet.

Step 10. Determine pressure service connection at C.

$$P_{SC} = H(E_{BT} - E_{SC}) - PF_{actual}$$

$$0.433(143 - 70) - 8.92 = 22.7\ psi$$

All system parameters are within acceptable limits. No redesign is neccessary.

DESIGN A TO B

E-12. Use the following steps when performing Design A to B:

Step 1. Determine Q from A to B.

$$Q_B = 41\ (from\ Step\ 1,\ Example\ Water\ Line\ Design\ 2)$$

Step 2. Determine $Pf_{allowable}$

$$Pf_{allowable} = H(E1 - E2) - required\ pressure$$

$$0.433(143 - 85) - 20\ psi = 5.1\ psi$$

Step 3. Determine the length of the pipe (*Figure E-5, page E-8*).

$$Total\ length = length\ T\ to\ B - length\ T\ to\ A$$

$$190' - 45' = 145'$$

Step 4. Determine $PF_{allowable}$ in a 100-foot section.

$$PF_{allowable} = \frac{Pf_{allowable}}{total\ system\ length} \times 100'$$

$$\frac{5.1}{145} \times 100' = 3.52\ psi$$

Step 5. Select a 2-inch pipe diameter with a velocity of 4.2 fps (intersection of selected pipe and Q). See *Figure D-4, page D-6*.

Step 6. EL for A to B is 28.4.

Step 7. Determine $PF_{allowable}$ in a 100-foot section.

$$A \text{ to } B: \frac{5.1}{145' + 28.4'} \times 100' = 2.94 \text{ psi}$$

Step 8. Determine Pf_{actual}

$$Pf_{actual} = \frac{PF_{actual}}{100'} \times \text{system length}$$

$$\frac{1.9}{100'} \times 178.4' = 3.39 \text{ psi}$$

Step 9. Determine the FWS. FWS_A = 143 feet.

Step 10. Determine the pressure at service connection B.

$$P_{SC} = H(E_{BT} - E_{SC}) - Pf_{actual}$$

$$0.433(143 - 85) - 3.39 \text{ psi} = 21.7 \text{ psi}$$

System parameters are within acceptable limits.

Glossary

'	foot, feet
"	inch, inches
°	degree
ABS	acrylonitrile butadiene styrene
Adm A&D	administration, admission, and disposition
AFCS	Army Facilities Components System
AFM	Air Force manual
AFMAN	Air Force manual
AGA	American Gas Association
AL	Alabama
angle valve	A globe valve with the inlet and outlet that are 90 degrees to one another.
AR	Army regulation
atmospheric pressure	The pressure at the atmosphere at sea level (14.7 psi).
attn	attention
backflow	Water flowing in a pipe in the reverse of the intended direction.
back pressure	The pressure within a sanitary drainage or vent pipe system that is greater than the existing atmospheric pressure.
ball cock	A valve that is opened or closed by the fall or rise of a ball floating on water in a water closet tank.
battery of fixtures	A group of similar adjacent fixtures that discharge into a common sanitary drainage horizontal branch line. Also called *fixtures in a row*.
bell (or hub)	That portion of a pipe which, for a short distance, is sufficiently enlarged to receive the end of another pipe of the same diameter for the purpose of making a joint.
bell and spigot	*See* hub and spigot.
bibb cock	A faucet having a bent-down nozzle. Also called *bibcock*.
bibcock	*See* bibb cock.
bill of materials	A list of all the materials necessary to complete a job.
bks	barracks
boiler	That part of a furnace in which steam is generated for heating or producting power.

BOM bill of materials

bonnet A cover for an open fireplace or a cowl or hood to increase the draft of a chimney; metal covering for valve chambers, hydrants, or ventilation.

branch Any part of a plumbing pipe system except risers, mains, or stacks.

branch vent A vent pipe connecting one or more individual vents to the main vent (or *vent stack*).

building sanitary drain A drain (within a building) that disposes of sewage only.

bushing A plug designed to be threaded into the end of a pipe. One end is bored and tapped to receive a pipe of smaller diameter than that of the pipe into which it is screwed.

C Celsius

cap A short, closed cylinder to screw on the end of a pipe.

capillary action A foreign object lodged in the trap causes loss of trap seal. The object acts as a wick and carries the water from the trap over the outlet side into the waste pipe until the seal is ineffective. Rags, string, lint, and hair commonly cause this problem.

cfm cubic feet per minute

chap chapter

check valve A valve that allows water flow in one direction only and automatically closes to stop backflow. Two types of check valves are *swing* and *lift*.

chlorination The principle method of sterilization for the destruction of pathogenic organisms in sewage treatment. It is also used to remove certain tastes and odors in a water purification system.

chp chapter

circuit vent A vent that extends from the main vent to connections on the horizontal soil or waste branch pipe between the fixture connections.

cleanout A plugged fitting placed in a sanitary drainage system which can be removed to clean the inside of pipes. A *main cleanout* (or *stack cleanout*) is located at the bottom of the stack; other cleanouts are located near fixtures.

CMF career management field

CO cleanout

combination sewer A sewer that disposes both sewage and storm water.

common trap seal A P-trap with a 2-inch deep water seal.

common vent A connection at the junction of two fixture drains serving as a vent for both fixtures. Also known as a *unit vent*.

compression faucet A faucet that shuts off the water flow by compressing a washer down onto a seat.

condensate Droplets of water that form on the outside of a cold-water pipe when it is exposed to warm air. Also called *condensation*.

condensation *See* condensate.

CONUS continental United States

corporation stop A valve placed on the water main.

corrosion The thinning of the wall of a metal pipe caused by electrolysis. *See also* electrolysis and dielectric union.

coupling A fitting with inside threads only, used for connecting two pieces of pipe.

CPVC **c**hlorinated polyvinyl chloride

curb stop A valve placed outside a building on the water service line near a curb.

DA Department of the Army

deep-seal trap A P-trap with a 4-inch deep water seal.

DFU *See* drainage fixture unit.

diaphragm valve A valve closed by the pressing of a diaphragm against an opening or one in which the motion of a diaphragm under pressure controls its opening and closing.

direct siphonage *See* self-siphonage.

dielectric union Used to connect dissimilar metals, such as galvanized-steel/iron pipe to copper pipe, to prevent corrosion.

dosing tank A filter tank with an automatic siphon for discharging sewage into the distribution pipes when the tank is full, cutting off when the tank is empty.

downflow (downfeed) system A steam-heating system in which the supply mains are above the level of the heating units that they serve.

drain A pipe, channel, or trench through which waste water or other liquids are carried off.

drainage A system of drains; the act or means of draining.

DFU drainage fixture unit; a common measure is that one DFU equals 7.5 gallons per minute discharge.

drip line The return pipes through which the condensation from a radiator flows back to the boiler.

dry return A return pipe in a steam-heating system that enters the boiler above the water line carrying condensation, water, air, and so forth.

drum trap A cylindrical trap with an inlet and outlet pipe smaller than its diameter. Normally used in bathtubs.

DSP	dispensary
duct	Pipe, tube, or channel used to convey air, water, gases, or liquids.
DWG	drawing
DWV	drain, waste, and vent
dynamic head	Static head minus the friction losses of a flowing liquid, expressed in feet. Also called *free water surface (FWS)* elevation.
eccentric fitting	A fitting in which one end is offset from the center line.
EE-Ph	emergency entrance and pharmacy
effluent	The liquid discharged from a septic tank or sewage disposal plant.
EL	equivalent length
el	elevation
electrolysis	Chemical breakdown by electric current. Also referred to as *electrolytic action*.
EM	electronic media
emer	emergency
factor of simultaneous use	The percentage of fixtures potentially in use at a given time. An estimate of the total demand on a water supply system.
fig	figure
fixture demand	*See* maximum fixture demand.
fixtures in a row	*See* battery of fixtures.
fixture supply	A water supply pipe connecting the water service.
fixture supply riser	A vertical water supply pipe that brings water to fixture branches.
fl mtd	floor mounted
floor drain	A fixture used to drain water from floors into the plumbing system.
flow pressure	The pressure of a water supply line near a faucet while the faucet is wide open with water flow.
flow rate	The volume of water used by a plumbing fixture in a given time, in gallons per minute.
flush valve	A valve located in a water closet tank for flushing water closets.
flushometer valve	The valve in a flushometer that discharges a predetermined amount of water for flushing urinals or water closets.
flux	A substance (as rosin) applied to surfaces to be joined by soldering, brazing, or welding to clean and free them from oxide and promote their union.
FM	field manual
FOQ	female officers' quarters

fps foot (feet) per second

FU fixture unit

FWS free-water surface—See *dynamic head*.

friction loss *See* pipe friction.

ft foot, feet

furnace That part of a heating plant in which combustion of fuel takes place.

FWS *See* free water surface.

gal gallon, gallons

gate valve A valve that starts and stops the flow of liquid, steam, or gas by means of a wedge disk.

globe valve A valve that controls the flow of liquid by means of a circular disk.

GPD gallons per day

GPH gallons per hour

GPM gallons per minute

GPW gallons per week

grade The fall slope of a pipeline in reference to a horizontal plane.

grease trap A device for solidifying and separating grease from domestic wastes and retaining it so that it may be removed, thus preventing the stoppage of waste pipes.

H height

hangers *See* pipe supports.

head A measure of the pressure exerted by a liquid column, converted to feet of height.

horizontal pipe Any piece of pipe which makes an angle of less than 45 degrees from the horizontal.

house drain That part of the lowest horizontal piping of a plumbing system that receives the discharge from soil, waste, and other drainage pipes inside of any building and conveys the discharge to the house sewer.

house sewer The part of the sewerage system that begins just outside the building foundation wall and ends at the main sewer in the street or at a septic tank.

HQ headquarters

hub A bell-shaped end of cast iron pipe.

hub-and-spigot joint Each length of cast-iron pipe is made with an enlarged (bell or hub) end and a plain (spigot) end. The spigot end of one length fits into the hub end of the next length and is made tight by caulking.

HWR hot-water return

HWS hot-water supply

IAPMO International Association of Plumbers and Mechanical Officials

incl included

Imhoff tank A circular or rectangular two-story septic tank having a greater efficiency than an ordinary septic tank.

in inch, inches

indirect siphonage Caused by a large discharge of water which tends to form a slug in the stack; as this slug passes the takeoff of the fixture below it, air is pulled out of the waste line on the lower fixture. Also called *momentum siphonage.*

individual vent A pipe that is installed to vent a single fixture.

inlet An L connected with a pipe discharging into a combined or storm sewer. The open end is protected by a cast-iron frame and grating to allow the entrance of storm water.

incl enclosure

inv inverted

JTF joint task forces

K thick-walled copper tubing

L elbow; medium-walled copper tubing

Lav lavatory

lavatory A fixture for washing hands and face, found in a bathroom.

lb pound, pounds

LB-DN lab-dental

Lctr-Emer lead-center emergency

leaching tank A tank made of wood, concrete, or masonry used for disposal of raw sewage from short time installations or septic tank effluent from long time installations.

lift check valve *See* check valve.

Lnx-Sup linen exchange and supply

M thin-walled copper tubing

main cleanout *See* cleanout.

main soil-and-waste stack Vertical piping that extends one or more floors and receives the discharge of water closets. It can also receive discharge from other fixtures. It is called a *soil stack* when receiving discharge from water closets and a *waste stack* when receiving discharge from other fixtures.

main soil-and-waste vent The upper part of the stack, where it connects to the main vent

and to the VTR. Also called *stack vent* or *vent stack* in this manual. *See also* main vent.

main vent The main pipe of the venting system to which branch vents are connected. The main vent runs parallel to and is then connected to the upper section of the stack, which runs through the roof (VTR) to release harmful sewer gases from a building. *See also* main soil-and-waste vent.

main vent T The T that connects the main vent to the stack.

maximum fixture demand The total amount of water needed to supply all fixtures at the same time.

minus pressure A pressure within a pipe of less than atmospheric pressure. Also known as *negative pressure.*

MOS military occupational specialty

MOQ male officers' quarters

NAVFAC Naval facility

negative pressure See *minus pressure.*

nipple A short length of pipe threaded at both ends and less than 12 inches long.

No. number

noncompression faucet A faucet with a single lever or knob that opens and closes ports for water flow and shutoff. Also called *washerless* faucet.

NPT national pipe thread

NPT/M normal pipe thread/male

NSN national stock number

oakam Hemp used for caulking.

OCONSUS outside continental United States

offset The combination of elbows or bends that bring one pipe section out of alignment but parallel with the other section.

P pressure

PB polybutylene

PF Actual pressure loss in a 100-foot section.

PE polyetylene

pipe friction Resistance to flow. Also called *friction loss.*

pipe supports Any device used for supporting and securing pipe and fixtures. Also called *pipe hangers.*

plenum An enclosed space where the pressure of the air is greater than the outside atmosphere.

plumbing fixture A receptacle designed to receive water and discharge the

	wastewater into a sanitary waste system.
plus pressure	The pressure within a sanitary drainage or vent pipe system that is greater than the atmospheric pressure. Also known as *positive pressure.*
POC	point of contact
POL	petroleum, oils, lubricants
positive pressure	*See* plus pressure.
ppm	parts per million
pressure-reducing valve	A valve for reducing steam pressure in heating systems where boilers are operated for power purposes, at high pressure.
P_{SC}	pressure at service connection
psi	pounds per square inch
P-trap	A P-shaped pipe commonly used on plumbing fixtures.
PVC	polyvinyl chloride
Q	quantity
UPC	Uniform Plumbing Code
rec	recreation
reducer	Any one of the various pipe connections so constructed as to permit the joining of pipes of different sizes, such as reducing L, reducing sleeve, reducing T, and so forth.
riser	*See* fixture supply riser.
rough-in	The installation of all sections of a plumbing system that can be completed before the wall or fixture placement.
run	That portion of a pipe or fitting continuing in a straight line in the direction of flow of the pipe to which it is connected.
S&I	standardization and interoperability
sanitary drainage pipe	Installed pipes that remove waste water and waterborne waste.
sanitary sewer	A sewer that carries only sewage.
SD	shower drain
sedimentation	The suspended solids pulled down by gravity when the velocity of sewage is reduced.
self-siphonage	The loss of the trap seal as a result of removing the water from the trap caused by fixture discharge. Also called *direct siphonage.*
service L	An elbow having an outside thread on one end.
service T	A T having inside thread on one end and on the branch but outside threads on the other end of the run.
sewage	Any refuse or waste matter carried off by a sewer.

sewerage system	A system of underground pipes for carrying off waste water and refuse.
sewage treatment	Any artificial process to which sewage is subjected in order to remove or alter its objectionable qualities and render it less dangerous or offensive.
sewer	Any underground pipe that carries out waste water and refuse.
SF	square feet
siphonage	The suction created by the flow of any liquid in pipes.
soil-and-waste stack	*See* main soil-and-waste stack.
soil pipe	A term generally applied to cast-iron pipe in 5-foot lengths for house drainage. The pipe carries the discharge of water closets containing fecal matter.
soil stack	*See* main soil and waste stack.
SOP	standing operating procedures
spigot	The ends of a pipe that fit into a bell (s*ee also* hub-and-spigot joint; it is also another name for a faucet.
SPC	special services
sq ft	square feet
stack	Any vertical soil, waste, or vent piping. *See also* main soil-and-waste stack and main soil-and-waste-vent.
stack cleanout	*See* cleanout.
stack vent	*See* main soil-and-waste vent.
static head	Height of a fluid at rest (no flow).
stop-and-waste valve	A valve that has a part that can be opened to allow water to drain from piping to the valve.
storm drain	Receives storm water, clear rain, or surface-water waste only.
Surg-Cms	surgery-centralized material
supports	*See* pipe supports.
SW	service weight
SY	square yard
swing check valve	*See* check valve.
T	tempered water; A fitting for connecting pipes of unequal sizes or for changing direction of pipe runs. A bullhead T has an outlet larger than the opening on the run; a straight T has all openings of the same size.
TC	training circular
TM	technical manual
TO	theater of operations

TRADOC United States Army Training and Doctrine Command.

trap seal A column of water between a P-trap's crown weir and the top dip. The trap is equalized by the atmospheric pressure on one side and the discharge pressure on the fixture side. *See also* common trap seal and deep-seal trap. Any difference between the two pressures causes *trap seal loss*.

U urninal

unit vent *See* common vent.

UPC uniform plumbing code

urinal A water-flushed fixture designed to directly receive urine.

US United States

USAEDH United States Army Engineer Division, Huntsville

Utl utility

vacuum An air pressure less than that exerted by the atmosphere.

vapor heating A system for warming buildings consisting of a two-pipe gravity return system of steam circulation in which provision is made to retard or prevent the passage of steam from the radiator into the return main, and in which the air from the system, as well as condensed water, is carried back to a point near the boiler. Then the air is expelled from the mains and the water is returned to the boiler.

VCP vitrified-clay pipe

vent pipe Any small ventilating pipe running from various plumbing fixtures to the vent stack.

vent stack *See* main soil-and-waste vent.

vol volume

VTR vent through the roof—The section of the stack that runs through the roof, after the main vent T is installed.

vertical pipe Any pipe that makes less than 45 degrees from a vertical plane.

wall hung A plumbing fixture that is supported from a wall.

waste stack *See* main soil and waste stack.

water closet A water-flushed plumbing fixture designed to accept human semisolid waste directly.

water hammer A concussion or sound of concussion of moving water against the sides of a pipe (as a steam pipe).

water seal *See* trap seal.

weir Any type of bulkhead or dam over which a liquid flows.

wet vent A vent that also serves as a drain.

Wrd ward

Wtk	water tank
XH	extra heavy
Xry-Lb-Dn	x-ray-lab-dental
w/	with
WC	water closet
Y	A fitting that has one side outlet at any other angle than 90 degrees. The angle is usually 45 degrees unless otherwise specified.

Bibliography

DA Form 2028. *Recommended Changes to Publications and Blank Forms.* 1 February 1974.

DA Form 2702. *Bill of Materials*. 1 July 1963.

DA Pamphlet 611-21. *Military Occupational Classification and Structure.* 31 March 1999.

FM 3-100.4. *Environmental Considerations in Military Operations {MCRP 4-11B}.* 15 June 2000.

FM 5-412. *Project Management.* 13 June 1994.

TC 3-34.489. *The Soldier and the Environment.* 8 May 2001.

The Uniform Plumbing Code (UPC), International Association of Plumbers and *Mechanical Officials (IAPMO) (Copyright 1996*). 1997.

TM 5-300. *Real Estate Operations in Overseas Commands.* 10 December 1958.

TM 5-302-3. *Army Facilities Components System: Design (S&I USAEDH, ATTN: HNDED-FD, Huntsville, AL 35807-4301).* 28 September 1973.

TM 5-303. *Army Facilities Components System - Logistic Data and Bills of Materiel.* 1 June 1986.

TM 5-654. *Maintenance and Operation of Gas Systems (NAVFAC MO-220; AFM 91-6).* 3 November 1970.

TM 5-704. *Construction Print Reading in the Field {AFM 85-27} (Reprinted w/ Basic Incl C1).* 2 January 1969.

TM 5-810-5. *Plumbing {AFMAN 32-1070, Chp 4}.* 31 August 1993.

TM 5-813-5. *Water Supply, Water Distribution (AFM 88-10, Vol 5).* 3 November 1986.

TM 5-814-1. *Sanitary and Industrial Wastewater Collection-Gravity Sewers and Appurtenances {AFM 88-11, Vol 1}.* 4 March 1985.

TM 5-848-1. *Gas Distribution {AFM 88-12, Chap 1} (Reprinted W/Basic Incl C1).* 14 December 1990.

Index

A

ABS. *See* acrylonitrile butadiene-styrene, 6-36
absorption area, required, 1-51
accidental spillage, 1-40
acrylonitrile butadiene-styrene (ABS), 1-16
administrative functions, 1-32
aesthetic, 1-33
AFCS. *See* Army Facilities Components System, 1-30
aggregate material, 1-41
air
  lock, 1-12
  piping, 10-1, 10-3
  test, 8-5
aluminum shavings, 3-4
ammonia, 12-2
anaerobic digestion, 1-53
angle valve, 7-1, 7-2
antisweat, 12-2
  insulation, 12-2
arches, 1-16
arctic environments, 1-30
Army Facilities Components System (AFCS), 1-30
ashes, 1-47
asphalt, 6-2
  products, 1-33
atmospheric pressure, 1-43, 9-3

B

back pressure, 9-4
back siphonage, 1-12
back vent, 9-6
baffle boards, 1-20
baffle grease trap, 1-46
baffle walls, 1-20
ball cock, 4-6
  repairs, 4-10
ball noncompression faucet, 7-8, 7-11
ball peen hammer, 1-19
barometer, 1-43
barrel-filter grease trap, 1-47
base camp, 1-28
  latrines, 1-31
  locations, 1-31
  preplanned sites, 1-29
basic concepts, E-1
basin wrench, 7-9
bathtubs, 3-5, 4-23
  ledge seats, 4-23
batter board, 1-25
bearing housing, 11-5
beds, 1-57
bends, 6-8, 6-10
  base of the stack, 8-5
  long sweep, 6-10
  short sweep, 6-10
bill of materials (BOM), V, 1-1, B-1, C-1
bitumen, 6-2
bituminous compounds, 6-2
bituminous-fiber pipe, 1-16, 1-54, 6-40
  orange burg, 6-40
bladders, 1-14
blowtorch, 3-3
boiler and tank coverings, 12-3
BOM. *See* bill of materials
bonnet, 2-5
boot, 2-9
boot fitting, 2-9
bored-hole latrine, 1-37
  covered metal drum, 1-38
box-type traps, 1-20
branch and main waste lines, 3-5
branch, 1-2, 8-1, 8-2
  duct, 2-8
  horizontal branches, 8-4
  line, 3-4
  Y, 6-8, 6-9, 6-10
    trapped inverted, 6-9
brass, 1-2
brick, 1-18
brick-and-mortar wall, 1-20
brine, 12-2
bronze, 7-1
building-waste system plans, 1-1
burlap, 3-3
bushing, 6-23
  face, 6-23

C

calcium, 1-8, 3-4
  silicate, 12-3
canvas jacket, 12-2
capillary action, 9-4
carbon monoxide, 10-3
  poisoning, 5-6
carbon tetrachloride, 11-5
casing, 11-3
cast iron, 1-2, 6-7
  fittings, 6-12
  pressure pipe, 6-45
  corporation, 6-45
  ring, 1-20
  soil pipe, 1-16, 6-1
    hub-(or bell-), 1-16
    hubless, 1-16
    spigot, 1-16
  traps, 6-11
caulking iron, 6-14
ceiling registers (diffusers), 2-5
cellular glass, 12-3
cement pipe, 6-43
  nonreinforced, 6-43
  reinforced, 6-43
cement sleeve, 6-43
center-to-center, 6-5
  measure, 6-6
cesspools, 1-25, 1-53
check valve, 7-1, 7-2, 7-5, 11-4
  lift-type, 7-1
  swing, 7-1
chemical toilets, 1-31
chlorinated polyvinyl chloride (CPVC) plastic, 1-11
chlorine, 1-6
  cylinders, 1-7
  dosage, 1-6
cinder block, 1-18
circuit vent, 9-6, 9-9
circulating-water supply system, 1-12
civil affairs, 1-29
clay drain tiles, 1-54
  heavy, 1-25
cleaners, 1-33
cleaning primer, 6-38

cleanout, 6-12
plug, 3-9
clevis, 4-15
close-coupled, 4-4
closet bend, 4-3, 6-11
cold chisel, 6-13
cold-water systems, 1-2
brass, 1-2
cast iron, 1-2
copper tubing, 1-2
galvanized, 1-2
galvanized-iron, 1-2
galvanized-steel pipe, 1-2
plastic pipe, 1-2
wrought iron, 1-2
collocated, 1-29
comfort zone, 2-8
common trench, 1-11
common-vented, 9-6
fixtures, 9-9
company-sized elements, 1-49
compressed-air system, 10-3
compression
faucet washer, 7-7
joints, 1-6
nut, 6-34
ring, 6-34
concrete, 1-16
cast in place, 1-16
drain tiles, 1-54
pipe, 6-2
shower pans, 4-22
condensed steam (condensate), 2-3
condense, 2-2
conduit, 1-16
contact time, 1-6
contingency operation, 1-28
control box, 11-3
copper tubing, 1-2, 6-1, 6-27
capacities, D-3
drain waste vent (DWV), 6-28
k, 6-27
L, 6-28
M, 6-28
cork pipe covering, 12-2
corporation, 6-45
cast-iron, 6-45
stop, 1-9
corridor, 2-8
corrosion, 1-8
direct current of electricity, 1-8
factor, 1-2
galvanic, 1-8
reducing, 3-2
repair
copper pipe, 3-1
galvanized pipe, 3-1
couplings, 6-20, 6-43
eccentric, 6-20
reducing, 6-20
standard, 6-20
cement sleeve, 6-43
rubber rings, 6-43
covered metal drum, 1-38
CPVC. *See* chlorinated polyvinyl chloride, 6-36
crawl space, 2-6
crib, 1-39
cross, 6-22
joins, 6-22
side-outlet, 6-22
curb, 1-10
cushion gasket, 4-4
cutting, 6-13
cold chisel, 6-13
oil, 6-3
soil-pipe, 6-13
soil-pipe cutter, 6-13
wheel, 6-24

D

degree of offset, 6-6
design considerations, 1-49
design, 1-2
dynamic head, E-2
load procedures, E-3
systems procedues, E-1
procedures, E-3
static head, E-2
detail drawings, B-1
special, 1-1, B-1
standard, 1-1
DFU. *See* drainage fixture units, 1-18
diaphragm, 4-7
dielectric, 6-22
unions, 3-2
dining facilities, 1-32
dining sanitation center, 1-29
direct current of electricity, 1-8
direct siphonage, 9-3
discharge hose, 11-3
disease
infectious, 1-33
insects, 1-33
rodents, 1-33
disinfect, 1-6
piping system, 1-6
chlorine, 1-6
hypochlorite, 1-6
disposal, 1-30
field, 1-22
systems, 1-29
dissolved salts, 1-27
distribution
box, 1-22
points, 1-14
system, 1-1
diversion gate, 1-22
domestic waste, 1-15
dosages, 1-6
dosing tank, 1-57
downflow, 2-4
distribution, 2-4
furnace, 2-5
drain assembly, 4-14
chain-type plug, 4-14
pipe-joint compound, 4-14
plumber's putty, 4-14
pop-up plug, 4-14
drains
floor, 3-4
footing, 6-40
shower, 3-5
stoppage, 3-8
storm inlet, 1-14
drain waste vent (DWV), 1-18, 6-28
fittings, 6-28
drainage
bed, 1-24
fittings, 6-20
fixture units (DFUs), 1-17
lines, 1-26
soil absorption rate, 1-26
washing water, 1-40
drain-plug assembly, 4-15
dresser couplings, 10-4
drinking fountains, 4-1, 4-25
drip cock, 1-6, 1-12
drip legs, 10-3
drum, 1-30
top cover, 3-8
trap, 3-8, 9-1
dunnage beams, B-4
DWV. *See* drain waste vent
dynamic head, E-2
dynamic water distribution, E-3
design procedures, E-3

E

earthmoving equipment, 1-30
effluent, 1-48
elbows, 6-20
reducing L, 6-20
street, 4-23
electrician's friction tape, 3-2

electrolysis, 3-1
electrolytic
action, 3-2
cells, 3-2
emery cloth, 4-11, 6-30
enameled cast iron, 4-16
enameled pressed-steel, 4-16
end-to-center, 6-5
end-to-end, 6-5
environmental pollution, 1-27
equilibrium, 1-43
evaporation beds, 1-30, 1-47, 1-52
excreta, 1-36
expandable pillow tanks, 1-30
expansion chamber, 1-3
explosion, 5-6

F

face bushing, 6-23
face-to-end, 6-5
face-to-face, 6-5
measure, 6-6
facility engineers, 1-28
factoring loss
pressure, 1-4
faucets, 1-11
ball compression, 7-8, 7-11
cartridge, noncompression, 7-8, 7-11
single-knob, noncompression, 7-8
valve, 7-8, 7-11
noncompression, 7-8, 7-11
washerless, 7-8
federal, state, and local
environmental laws for human waste, 1-31
fiberglass, 12-2
insulation, 12-2
field expedient
incinerators, 1-32
wastewater disposal system, 1-29
field laundries, 1-29
filter trenches, 1-57
fine-tooth hacksaw, 6-29
fire trench, 5-5
fire-resistant structures, 1-13
fittings, 6-3, 6-8, 6-28
bends, 6-8
cleanout, 6-12
dimension, 6-5
DWV, 6-28
flared, 6-28
increaser, 6-11
offset, 6-11
sewer thimble, 6-12
sizes, 6-36
solder, 6-28
symbols, B-8
T's, 6-8
traps, 6-8
Y-branches, 6-8
fixed sewage systems, 1-31
fixture
control devices, 4-10
demand, 1-2, 1-5
drain, 3-4
in-use, 1-2
number and kinds, 1-2
simultaneous use, 1-2
supply risers, 1-2
symbols, B-9
unit capacity, 1-17
vents, 9-6
flange, 6-21
floor, 4-3
nut, 6-32
flanging tool, 6-32
flapper, 4-11
flare/compression nut, 6-32
flared fittings, 6-28
flaring tool, 6-32
flex rubber, 12-2
float cup, 4-6
float valve, B-4
floating grease particles, 1-20
flue, 5-3
flushing devices, 1-2
flushometer, 4-6
valve, 4-7
food sanitation center, 1-29
footing, B-4
force-cup plunger, 3-5
forced-air
circulation, 2-5
heating, 2-1
systems, 2-1
free-water surface, E-2
friction loss, 1-2
frost line, 1-8
depth, 1-11
penetration, 1-11
frost proof, 12-2
full S-trap, 9-2
funnel, 1-42
furnace
coil, 5-1
firebox, 5-1
gas-fired, 2-5
oil-fired, 2-5

G

galvanic corrosion, 1-8
galvanized, 1-2
pipe, 3-1
iron, 1-2
steel pipe, 1-2
steel/iron pipe, 6-1
capacities, D-3
steel/iron pipe and fittings, 6-19
double extra strong, 6-19
extra strong, 6-19
schedule 40, 6-19
schedule 80, 6-19
standard, 6-19
gas
chlorinators, 1-7
natural, 10-3
piping, 10-1, 10-3
system, 10-3
carbon monoxide, 10-3
gas piping, 10-3
methane, 10-3
natural, 10-3
water heater, 5-1
gaskets, 6-2
cone-shaped, 4-4
cushion, 4-4
rubber, 4-3
sealing, 4-4
wax, 4-3
gate valves, 1-6, 7-1, 7-2, 7-3, 11-4
nonrising stem inside screw, 7-1
rising stem inside the screw, 7-1
rising stem outside screw and yoke, 7-1
general waste, 1-33
geological conditions, 1-28, 1-30
glass wool, 12-3
globe valve, 7-1, 7-2, 7-4
gravity
feed, 1-57
return system, 1-12
grease
cup, 11-2
traps, 1-20
trap stoppage, 3-9
ground, 6-21
groundwater
contamination, 1-38
table, 1-34

H

hair, grease, or other foreign matter, 3-4
hand washing
device, 1-34
facilities, 1-31
hanger bracket, 4-13
hard water, 1-8
hazardous waste, 1-33
cleaners, 1-33
paints, 1-33
solvents, 1-33
special handling, transportation, disposal, and documentation, 1-33
head, 11-1
head loss, D-6
heat
elements, 5-3
forced-air, 2-1
hot-water system, 1-11, 2-1
plan, 2-1
one-pipe system, 2-1
plant, 2-6
steam system
condensed steam, 2-3
high-pressure, 2-2
low-pressure, 2-2
thermostatic, 2-3
vacuum, 2-2
vapor, 2-2
two-pipe system, 2-1
upflow, 2-5
weld, 10-3
hemp, 6-2
herringbone, 1-57
high-temperature systems, 10-1
horizontal
branches, 8-4
lead joint, 6-15
horn, 4-3
hose, 3-8
clamps, 3-2
hot-water system
boiler, 2-1
circulating pump, 2-1
compression tank, 2-1
hub (or bell), 1-16
hub-and-spigot
cast-iron pipe, 6-2
pipe, 6-7
pipe joint, 6-14
hubless, 1-16
pipe, 6-7
human waste disposal
feces and urine, 1-30
in the field, 1-34
improvised facilities, 1-34
hypochlorite, 1-6

I

Imhoff tank, 1-23
immersion-type heating elements, 5-3
impeller, 11-1
chamber, 11-5
impervious rock formations, 1-38
improvised facilities, 1-34
incinerate, 1-40
increaser, 6-11
indirect siphonage, 9-4
industrial drain, 1-16
inlet pipe, 1-22
inlet-coupling nut, 4-8
insects
breeding sites, 1-28
disease, 1-33
fly control, 1-34
installation level, 1-31
insulation, 12-1
blanket, 12-3
frost proof, 12-2
jacket, 5-1
iron
packing, 6-14
pickout, 6-14
ring hangers, 6-3
wrought, 1-11

J

joining, 6-14
joint, 6-2
cold caulk, 6-18
collars, 12-3
compound, 4-7
flared, 6-32
hub and spigot, 6-7
interlocking mechanical-compression, 6-45
lead, 6-15
mechanical compression, 6-33
runner, 6-14
joint task forces (JTF), 1-29
jute fibers, 6-2

K

kerosene, 11-5
kitchen, 1-28
sinks, 4-18
soakage pit, 1-45
waste, 1-44
treatment before disposal, 1-44

L

ladle, 3-9
lard oil, 6-3
latrine
base camp, 1-31
bored hole, 1-37
box, 1-36
burn out, 1-39
cathole, 1-35
close a pit, 1-35
close, 1-31
deep pit, 1-36, 1-38
applying lime, 1-37
box, 1-36
four-seat boxes, 1-36
self-closing lids, 1-37
field, 1-31
fixed, 1-31
location, 1-31
mark, 1-31
mound, 1-38
crib, 1-39
sandbags, 1-39
straddle trench, 1-36
laundries, 1-28
laundry tubs, 4-24
lavatory, 3-5, 4-12
leaching, 1-55
tanks, 1-25
lead, 1-16, 6-2
pipe, 10-3
poisoning, 5-6
shower pan, 4-22
wool, 6-18, 6-2
leaky washers, 7-3
ledge seats, 4-23
legend, B-1
BOM, B-1
special detail drawing, B-1
standard detail drawing, B-1
lime, 1-37
list of all materials, C-1
long sweep, 6-10
looped system, 1-12
loose mineral wool, 12-3
lye, 3-4

M

magnesia, 12-2
magnesium, 1-8, 3-4
particles, 3-2
rods, 3-2

main
line, 3-4
supply ducts, 2-8
trunk, 2-8
vent, 9-6
vent T, 8-4
water supply, 1-5
maintenance, 12-3
manholes, 1-14
marshes, 1-40
materials list, C-1
matted wool fibers, 12-2
maximum fixture demand, 1-4
maximum load, 5-6
measure, 6-12
cast-iron soil pipe, 6-12
pipe lengths, 6-5
measurement type, 6-5
mechanism, 4-6
ball cock, 4-6
float cup, 4-6
medical
facilities, 1-32
waste, 1-33
infectious, 1-33
mess kit washing, 5-4
metal shims, 4-3
meter stops, 1-10, 1-11
methane, 10-3
metric tools, 1-13
minimum cover, 1-58
minimum practical size, 1-5
miter box, 6-30
molded pipe covering, 12-3
molten lead, 6-18
mortar, 1-19
motor pool operations, 1-32
mounting board, 4-13
municipal water system, 1-13
Mylar® seal, 4-9

N

national plumbing code (NPC), 1-2
natural gas, 10-3
neck dimensions, 2-5
neoprene sleeve, 1-16, 6-14
net, 11-4
nipple, 4-22, 6-22
close, 6-22
long, 6-22
shoulder, 6-22
nominal size diameter, 6-4
nonacid flux, 6-2
noncombat operations, 1-29
nonreinforced, 6-43
normal flow level, 1-18

O

oakum, 1-16, 6-2
offset, 6-11
offset
degree constants, 6-7
measurement, 6-6
oil-fired water heater, 5-2
oil-water flash burner, 5-4, 5-5
oil weight, 1-43
one-pipe system, 2-1
operation hazards, 5-6
carbon monoxide poisoning, 5-6
explosion, 5-6
lead poisoning, 5-6
operational considerations, 1-28
orange burg, 6-40
organic chlorine-consuming
material, 1-6
organisms
biological, 1-27
pathogenic, 1-27
outlet partition, 1-22
overflow cover, 3-7
oxidation ponds, 1-53

P

pail latrine, 1-40
paints, 1-33
partial vacuum, 11-4
particulate matter, 1-27
pathogens, 1-33
percolation
rate, 1-25
test, 1-25, 1-50
perforated iron strap, 6-3
perforated plastic pipe, 1-54
perforations, 1-54
petroleum derivatives, 1-33
petroleum, oils, lubricants (POL), 1-33
pipe, 1-11, 10-1
air, 10-1
capacities and the allowance for friction, 6-1
cast iron, 6-2
cast-iron soil, 6-12
characteristics and uses, 6-1
copper, 3-1
corrosion, 3-1
covering, 12-4
CPVC, 6-36
cutter, 3-2
double hub, 6-7
engagement, 6-4
expansion, 10-1
expansion and contraction, 12-1
fittings, 6-1
friction, 1-2
gas, 10-1
hangers, 6-3
hub-and-spigot, 6-7, 6-21
hubless, 6-7
joint compound, 4-14, 4-22, 6-2
insulation, 10-2
lead, 10-3
leaky, 12-4
length, 6-5
length for firction, D-5
nonreinforced hub-and-spigot concrete, 6-44
PB, 6-36
PE, 6-36
pitch, 10-1
plastic, 1-2, 6-1, 6-36
ABS, 6-36
CPVC, 6-36
polybutylene (PB), 6-36
polyetylene (PE), 6-36
polyvinyl chloride (PVC), 6-36
rests or clamps, 1-6
run length, 6-5
sizes, D-1
smoke, 5-3
steam, 10-1
symbols, B-8
threading set, 6-25
urinals, 1-42
plans, 1-1, 2-5
symbols, 2-5, B-1
plastic
capabilities, D-3
filler, 6-38
pipe, 1-2, 6-1, 6-36
pipe and fittings, 6-36
ABS, 6-36
CPVC, 6-36
polybutylene (PB), 6-36
polyetylene (PE), 6-36
polyvinyl chloride (PVC), 6-36
tubing, 3-2
plastisol joint connection, 6-45
pliers
lock grip, 4-9
plugs, 4-14
assembly, 4-15

chain type, 4-14
pop up, 4-14, 4-15
repairs, 4-17
plugs and caps, 6-22
plumber's ladle, 6-16
plumber's putty, 4-14
plumbing fixture, 4-1
POL products, 1-33
asphalt products, 1-33
fuel, 1-33
petroleum derivatives, 1-33
polybutylene (PB), 6-36
polyetylene (PE), 6-36
polyvinyl chloride (PVC), 6-36
portland cement, 1-19
potable water supply, 1-24
pressure
main, 1-4
minimum (worst-case)
operating regulator, 1-4
reducing valve, 1-4
relief valve, 5-1
pressure regulator, 1-4
operating regular, 1-4
preventive-medicine personnel, 1-30
prime mover, 11-4
priming, 11-4
chamber, 11-2
profile, 1-15
P-trap, 3-6, 3-7, 6-11, 9-1
connection, 4-15
pumping, treating, and disposing of
sewage, 1-14
pump, 11-1
casing, 11-5
centrifugal, 11-1, 11-2
impeller chamber, 11-5
maintain and repair, 11-5
submerged, 11-2
submersible, 11-3
vacuum, 2-2

Q

quartermaster personnel, 1-29

R

radiators, 2-1
range boiler and furnace-coil
arrangement, 5-1
range boiler and heater, 5-1
range boilers, 5-1
range-boiler, gas, oil-burning, and
electric, 1-11
ratchet test plug, 8-6
rate of filtration, 1-57
reamer, 6-23
rectangular sign, 1-44
recycle
laundry water,1-29
shower water, 1-29
reducing
friction loss, 1-3
corrosion, 3-2
dielectric unions, 3-2
magnesium rods, 3-2
coupling, 6-20
L, 6-20
Ts, 1-6
valve, 10-4
registers, 2-5
baseboard, 2-5
cold air, 2-5
return, 2-6
reinforced with wire or steel
bars, 6-43
relative absorption rates, 1-53
relieve the air lock, 1-12
residual insecticide, 1-34
resilient joints, 1-16
retrograde operations, 1-33
reverse-trap bowl, 4-2
rigid, preformed insulation, 12-2
rock stratum,1-52
rodent
breeding sites, 1-28
disease, 1-33
rotting waste from dining
facilities, 1-33
rough-in piping, 4-20
round manhole construction, 1-21
rubber
hose, 3-2
rings, 6-43
tubing, 10-3
washer, 4-4
running trap, 6-11

S

saddle, 1-8
salt, table, 3-4
sandbags, 1-39
sanitary drain capacity (in DFUs),
1-18
sanitary discharge, 1-15
sanitary drainage system, 4-1
sanitary sewer access, 1-30
sanitary T (reducing), 6-9
sanitary Ts, 6-8
sanitary waste, 1-15
scale, 1-8, 3-4
schedules
40, 6-19
80, 6-19
screening, 1-34
fly control, 1-34
scum, 1-8, 3-4
sea level, 9-3
sediment drain, 5-1
seepage flange, 4-22
self-adjusting mechanical seal, 11-2
self-closing, 1-40
lids, 1-37
self-contained vault toilets, 1-31
self-priming, 11-2
self-tapping machine, 1-8
semipermanent collection, 1-30
semipermanent wastewater
collection, 1-29
septic tanks, 1-20, 1-53, 1-54
baffle, 1-20
disposal field, 1-22
distribution box, 1-22
diversion gate, 1-22
inlet pipe, 1-22
siphon chamber ,1-20
subsurface sand filter, 1-23
service weight, 6-7
settling, 1-18
sewage
decay of, 1-20
lagoons, 1-53
plumbing, treating and
disposing of, 1-14
raw, 1-20
sewer
house, 1-15
sanitary discharge, 1-15
installation, 1-30
outfall, 1-16
pipe, 1-14
storm, 1-15
thimble, 1-18, 6-12
sewerage system, 1-14
disposing of sewage, 1-14
pumping, 1-14
stand alone, 1-31
treating, 1-14
shaft seals, 11-5
sheet metal, 1-42
sheet rubber, 3-2
short sweep, 6-10
shoulder, 6-22
shower, 1-28, 4-20
drains, 3-5
pan, 4-21
stall, 4-20
tile, 4-20

shredded lead, 6-2, 6-18
side-outlet, 6-22
simultaneous-use factor, 1-4, 1-5
single stack, 8-1
sinks, 3-5, 4-16
    enameled cast iron, 4-16
    enameled pressed-steel, 4-16
    kitchen, 4-18
    scullery, 1-20, 4-1, 4-18
    slop, 4-1, 4-18
        stand trap, 8-2
        trap-to-wall, 8-2
siphon, 1-12
    chamber, 1-20
    jet bowl, 4-2
size
    of an L, 6-20
    flow half full, 1-17
slab slopes, 1-20
slip nut, 4-6
slug, 9-4
snap-collar fitting, 6-40
soakage pits, 1-30
soakage trench, 1-42, 1-45
sodium chloride, 3-4
soil
    absorption rates of drainage lines, 1-26
    absorption test, 1-25
    composition, 1-30
    pipe cutter, 6-13
    soil and waste stacks, 8-1
    waste branch line, 6-11
solder, 6-2
solder fittings, 6-28
soldered joints, 6-30
soldering flux, 6-30
solid shelf, 1-11
solvent cement, 6-2, 6-38
    joints, 1-16
special handling, transportation, disposal, and documentation, 1-33
specific gravity, 10-3
spigot, 1-16
split T, 2-9
spring benders, 4-7, 6-35
sprinkler systems, 1-13
spud connection, 4-6
stacks, 8-1
    bend at the base, 8-5
    vent through the roof (VTR), 8-4
stacks and branches, 8-1
stainless steel band, 1-16
stall, 4-19, 4-20
stand trap, 8-2
standard coupling, 6-20
standard detail drawing, 1-11, B-1
static head, E-2
steam piping, 10-1
    high-temperature systems, 10-1
steam-heating systems
    condensed steam, 2-3
    high-pressure, 2-2
    low-pressure, 2-2
    thermostatic, 2-3
    vacuum, 2-2
    vapor, 2-2
steel wool, 4-11, 6-30
steel-coated, 4-7
stop box, 1-10
stoppage, 3-4
stopper linkage, 3-7
storm sewers, 1-15
straddle-trench latrine, 1-36
straight stop (for gas), 7-2
straight T, 2-9, 6-9
S-trap, 6-11
stuffing box, 11-5
submerged pump, 11-2, 11-3
submersible pump, 11-3
subsurface
    drainage, 6-40
    filter trenches, 1-57
    irrigation, 1-54
    sand filter, 1-23
    system, 1-24
suction side, 11-4
supply lines, 1-2
susceptible host, 1-33
suspended solids, 1-27
swaging, 6-34
    copper tubing, 6-34
    tool set, 6-34
symbols, B-1
    fitting, B-8
    fixture, B-9
    piping, B-8
    plan, 2-5
    valve, B-8

T

Ts, 6-8
    sanitary, 6-8
    sanitary (reducing), 6-9
    size, 6-20
    split, 2-9
    straight (reducing), 6-9
    tapped, 6-8
    test, 6-9
    trapped sanitary "I", 6-9
    trapped straight "I", 6-9
tactical conditions, 1-14
takeoffs, 1-6, 2-9, 6-8
    trunk, 2-9
tallowed flax packing, 11-5
tank, 4-4
    close-coupled, 4-4
    expandable pillow, 1-30
    farm, 1-14
    flushing mechanism, 4-6
    septic, 1-20, 1-53, 1-54
    wall hung, 4-4
tapering tool, 6-41
tap, 1-8
    inverted, 6-9
    sanitary "I", 6-9
    straight "I", 6-9
    T, 6-8
    water main, 1-8
tar
    paper, 1-42
    pitch, 6-2
Teflon® tape, 4-7
terra-cotta, 6-44
    vitrified-clay pipe, 6-44
test
    holes, 1-25
    plug, 8-6
    T, 6-9
testing, 8-5, 10-3
    air, 8-5
    leaks, 1-6
    ratchet test plug, 8-6
    test plug, 8-6
    water, 8-5
theater
    combat engineers, 1-28
    commander, 1-28
    operations, 1-1
thermostatic, 2-3
    water-mixing valve, B-5
tile, 4-20
    clay drain, 1-54
    drain fields, 1-53
    shower, 4-20
time lag, 1-12
toxic chemicals, 1-27
traditional field expedient disposal methods, 1-30
transients, 1-29
traps, 6-8, 6-11, 9-1
    3/4 S-trap, 6-11
    4-degree S-trap, 9-1
    cast-iron, 6-11

deep seal, 9-6
full S-trap, 9-2
P, 3-6, 3-7, 6-11, 9-1
running, 6-11
S, 6-11
seal, 9-2
trap seal, 9-2
loss, 9-1
trap-to-wall, 8-2
treatment, 1-30
treatment before disposal, 1-44
trouble sources, 11-5
trough, 4-19, 4-20
urinal, 1-42
U-shaped, 1-42
V-shaped, 1-42
tubing cutter, 6-29
tucker coupling, 6-12
turning vanes, 2-9
two-pipe system, 1-12, 2-1
downflow distribution, 2-4
Ts and elbows, 2-1
upflow distribution, 2-4
typical utility plan, B-1

U

underground piping, 12-3
undisturbed earth, 1-18
unions, 3-1, 4-23, 6-21
dielectric, 6-22
flange, 6-21
ground, 6-21
unit construction drawing, B-4
upflow distribution, 2-4
urinals, 1-42, 3-5, 4-18
stall, 4-19
trough, 4-19
vitreous china, 4-18
wall hung, 4-19
urine disposal facility, 1-40, 1-41
urine soakage pit, 1-41
urinoil, 1-43
U-shaped, 1-42
wire hangers, 6-3

V

valve, 7-1, 11-4
angle, 7-1, 7-2
bleeder, 12-3
check, 7-1, 7-2, 7-5, 11-4
compression faucet, 7-8, 7-11
coupling nut, 4-8
Douglas (outlet), 4-11
flap, 1-9
foot, 7-2
gate, 7-1, 7-2
globe, 7-1, 7-2
ground joint, 1-11
lift check, 7-1
missing control, B-5
pressure- or temperature-relief, 7-2
reducing, 7-2
relief, 5-1, 11-4
shutoff (angle), 2-4
single-handle mixing, 4-22
stop-and-waste, 1-6, 7-2
bleeder, 7-2
swing check, 7-1
symbols, B-8
vacuum, 11-4
valve and fitting coverings, 12-3
valves and fittings, 12-4
vanes, 11-1
vanities, 4-12
vapor burner, 5-4
vent, 9-1
continous, 9-6
DWV, 1-8, 6-28
fixture, 9-6
inadequate, 9-3
main, 9-6
pressure- or temperature-relief valves, 7-2
single-fixture, 9-6
back, 9-6
continuous, 9-6
wet, 9-9
vent through the roof (VTR), 8-4
ventilating shafts, 1-41
vermin, 12-3
vertical lead joint, 6-16
vertical supply riser, 1-6
vitreous china, 4-18
vitrified-clay pipe, 1-16, 6-44
terra-cotta, 6-44
tile, 1-16, 6-2
volatile fuel, 1-40
volute, 11-1
V-shaped, 1-42

W

wall hung, 4-4, 4-19
flush tank, 4-13
warm-air supply ducts, 2-5
washdown bowl with jet, 4-2
waste
lines, 3-5
branch and main, 3-5
matter, 1-17
solid, 1-32
wastewater
laws, 1-27
pumps, 1-29
tank trucks, 1-30
water
closet, 3-5, 4-1
reverse-trap bowl, 4-2
siphon-jet bowl, 4-2
snake, 3-5
stoppages, 3-5
washdown bowl, 4-2
flow rate, 4-1
hammer, 1-3, 2-4
heaters, 1-11, 5-1
electric, 5-1
gas, side arm, 5-1
meter, 1-11
pressure, 1-2
seal, 3-7
service main, 1-2
softener, 3-4
supply system, 1-1
test, 8-5
waterborne
sewage system, 1-53
wastes, 1-15
waterproof
cable, 11-3
cement, 1-11
weir, 9-2
wellhead, 11-2
wet vent, 9-9
wick, 9-4
wire mesh, 12-3
wood, 1-42
wood plugs, 3-2
wooden baffle, 1-46
wool felt, 12-2
working load, 5-6

Z

zeolite, 3-4

FM 3-34.471(FM 5-420)
31 AUGUST 2001

By Order of the Secretary of the Army:

ERIC K. SHINSEKI
General, United States Army
Chief of Staff

Official:

JOEL B. HUDSON
Administrative Assistant to the
Secretary of the Army
0122624

DISTRIBUTION:

Active Army, Army National Guard, and US Army Reserve: To be distributed in accordance with the initial distribution number 115860, requirements for FM 3-34.471.