FM 3-34.331

(Formerly FM 5-232)

Topographic Surveying

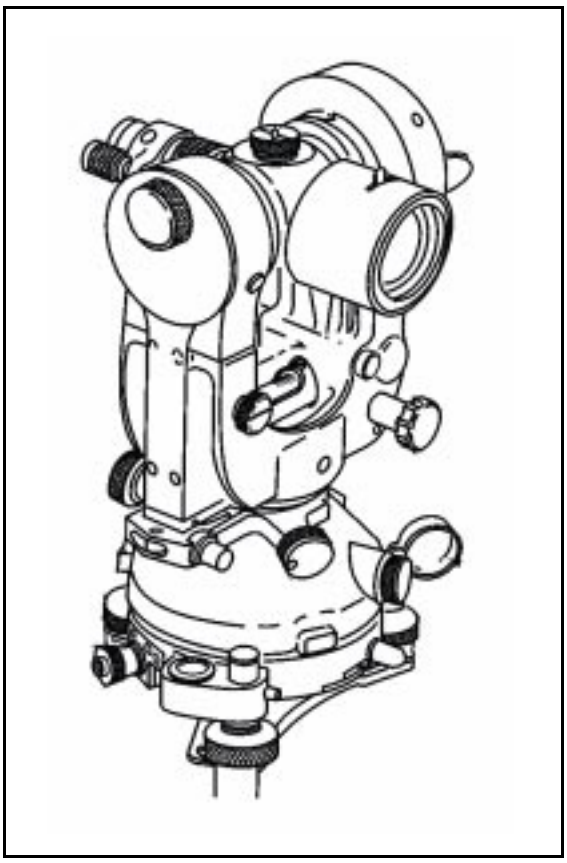

HEADQUARTERS, DEPARTMENT OF THE ARMY

DISTRIBUTION RESTRICTION: Approved for public relase; distribution is unlimited.

***FM 3-34.331** (FM 5-232)

Field Manual
No. 3-34.331

Headquarters
Department of the Army
Washington, DC, 16 January 2001

Topographic Surveying

Contents

		Page
	PREFACE	**vii**
Chapter 1	**MISSIONS, OPERATIONS, AND DUTIES**	**1-1**
	Survey Missions	1-1
	Survey Operations	1-3
	Survey-Personnel Duties	1-9
	Fieldwork	1-11
	Office Work	1-15
	Survey Communication	1-17
Chapter 2	**PROJECT PLANNING**	**2-1**
	Section I - Evaluation and Scheduling	**2-1**
	Project Requirements	2-1
	Unit Capabilities	2-2
	Accuracy Constraints	2-3
	Milestones	2-3
	Administrative Support	2-5
	Logistics Support	2-6
	Section II - Information-Gathering Trips	**2-8**
	Initial Site-Visitation Trip	2-8

DISTRIBUTION RESTRICTION: Approved for public release; distribution is unlimited.

*This Field Manual (FM) supersedes FM 5-232, 27 September 1989, and Technical Manuals (TMs) 5-232, 1 June 1971, and 5-237, 30 October 1964. It also supersedes DA Forms 1904, 1 February 1957; 1906, 1 February 1957; 1908, 1 February 1957; 1910, 1 February 1957; 1912, 1 February 1957; 1913, 1 February 1957; 1919, 1 February 1957; 1926, 1 February 1957; 1946, 1 February 1957; 1950, 1 February 1957; 1951, 1 February 1957; 1952, 1 February 1957; 1961, 1 October 1964; 1964, 1 February 1957; 2840, 1 October 1964; 2842, 1 October 1964; 2843, 1 October 1964; 2844, 1 October 1964; 2845, 1 October 1964; 2846, 1 October 1964; 2848, 1 October 1964; 2849, 1 October 1964; 2851, 1 October 1964; 2852, 1 October 1964; 2853, 1 March 1968; 2858, 1 March 1968; 2859, 1 March 1968; 2860, 1 October 1964; 2861, 1 October 1964; 2862, 1 October 1964; 2865, 1 March 1968; and 4727, 1 September 1978.

Page

Administrative-Recon Trip 2-9
Project-Visitation Trip 2-9
Section III - Project Execution 2-9

Chapter 3 SURVEY RECON 3-1
Section I - Recon Fundamentals 3-1
Recon Requirements 3-1
Recon-Party Composition 3-2
Section II - Recon Phases 3-3
Office Recon 3-3
Field Recon 3-4
Recon Reports 3-16

Chapter 4 DATUMS, GRIDS, AND COORDINATE REFERENCES 4-1
Datums 4-1
Grids 4-3
Coordinate References 4-6

Chapter 5 CONVENTIONAL SURVEY-DATA COLLECTION 5-1
Section I - Fundamentals 5-1
Angle Determination 5-1
Distance Measurement 5-13
Electronic Total Stations 5-15
Section II - Targets 5-16
Optical-Theodolite Target Set 5-16
AISI Target Set 5-17
Target Setup 5-19
Lighted Target Sets 5-19
Target and Tribrach Adjustment 5-20
Signals 5-21
Section III - AISI 5-24
Description 5-24
Components 5-25
Leveling 5-25
Quick Check 5-25
Data Collection 5-27
File Transfer 5-28
File Editing 5-28
Communications 5-29

Page

Instrument Maintenance 5-29
Section IV - CAD Interface 5-30
Total-Station Data Collection and Input 5-30
Plotting 5-31

Chapter 6 TRAVERSE 6-1
Starting Control 6-1
Open Traverse 6-1
Closed Traverse 6-1
Fieldwork 6-2
Traverse Stations 6-3
Traverse-Party Organization 6-4
Azimuth Computations 6-4
Azimuth-Bearing Angle Relationship 6-5
Coordinate Computations 6-6
Accuracy and Specifications 6-7

Chapter 7 DIFFERENTIAL LEVELING 7-1
Section I - Instruments and Equipment 7-1
Automatic Levels 7-1
Digital Levels 7-1
Optical-Micrometer Levels 7-2
Leveling Rods and Accessories 7-2
Instrument Testing and Adjustment 7-2
Section II - Precise Leveling Procedures 7-5
Recon 7-5
DE Determination 7-5
Field-Party Composition 7-6
Data Recording 7-6
C-Factor Determination 7-8
Center-Wire Adjustment 7-9
SIF Determination 7-9

Chapter 8 NAVSTAR GPS 8-1
Section I - GPS Overview 8-1
Operating and Tracking Modes 8-1
System Configuration 8-2
Broadcast Frequencies and Codes 8-3
Broadcast Ephemeris Data 8-4

Page

Section II - Absolute Positioning 8-5
Absolute-Positioning Accuracies 8-5
Pseudoranging 8-5
Absolute-Positioning Error Sources 8-6
User Equivalent Range Error 8-9
Accuracies 8-9
Section III - Differential Precise Positioning 8-14
Code-Pseudorange Tracking 8-14
Carrier-Phase Tracking 8-15
Vertical Measurements 8-17
Differential Error Sources 8-18
Differential Accuracies 8-18
Section IV - Precise-Positioning Survey Planning 8-19
Project-Control Accuracy 8-20
Network-Design Factors 8-21
Network Design and Layout 8-28
GPS-S Techniques 8-31
Section V - Precise-Positioning Survey Conduct 8-35
Basic GPS-S Procedures 8-35
Absolute Positioning 8-36
Differential Positioning 8-37
DGPS Carrier-Phase Horizontal-Positioning Surveys 8-39
Static Surveying 8-40
Stop-and-Go Kinematic Surveying 8-42
Kinematic Surveying 8-43
Pseudokinematic Surveying 8-44
Rapid-Static Surveying 8-45
OTF/RTK Surveying 8-45
Section VI - Precise-Positioning Survey-Data Processing 8-46
Processing Techniques 8-46
Baseline Solution by Linear Combination 8-47
Baseline Solution by Cycle-Ambiguity Recovery 8-49
Data Processing and Verification 8-49
Loop-Closure Checks 8-51
Data Archival 8-54
Section VII - Precise-Positioning Survey Adjustments 8-54
GPS Error-Measurement Statistical Terms 8-54
Adjustment Considerations 8-54

Page

Survey Accuracy 8-55
Internal Versus External Accuracy 8-57
Adjustments 8-58
Evaluation of Adjustment Results 8-66
Final-Adjustment Reports....8-68

Chapter 9 ARTILLERY SURVEYS....9-1
US Army FA 9-1
ADA....9-2
Survey Planning 9-3

Chapter 10 AIRFIELD-OBSTRUCTION AND NAVAID SURVEYS 10-1
Airport Obstruction Charts and NAVAID Surveys 10-1
FAA and FAR Standards....10-2
Airfield-Data Accuracy Requirements 10-7
Reporting....10-8

Chapter 11 REPORTS, BRIEFINGS, AND OPERATION ORDERS....11-1
Section I - Reports 11-1
General 11-1
ISVT Report 11-2
Recon Report 11-3
Progress Report 11-6
End-of-Project Report 11-6
Incident Report....11-7
Report Disposition 11-8
Section II - Briefings 11-8
Impromptu Briefing....11-8
Deliberate Briefing....11-8
Briefing Procedures....11-11
Section III - Survey SOP and Supporting Annexes....11-13

Appendix A MENSURAL CONVERSION CHARTS.... A-1

Appendix B CONTROL-SURVEY STANDARDS.... B-1
Differential Leveling.... B-1
Horizontal-Angle Measurement.... B-3
Trigonometric Observations B-4
GPS Techniques B-5

Page

Appendix C BASIC SURVEY COMPUTATIONS.....C-1
Computation of a Two-Point Intersection C-1
Computation of a Grid Traverse and Side Shots.....C-7
Computation of a C-Factor C-24
Computation of a Level Line.....C-28

Appendix D SURVEY FORMS.....D-1
GLOSSARY Glossary-1
BIBLIOGRAPHY Bibliography-1
INDEX.....Index-1

Preface

This FM is a guide for military occupational specialty (MOS) 82D (Topographic Surveyor). It provides techniques not found in any commercial text concerning the precise determination of position, azimuth, or elevation of a point. Additionally, this publication describes and standardizes procedures for performing recons, preparing station descriptions, and reporting and briefing of survey projects.

The material in this manual is applicable, without modification, to all geodetic survey projects in all environments (prebattle, conventional war [nuclear and nonnuclear], low intensity conflicts, and postbattle). The contents comply with Army doctrine and international precision surveying practices. This manual does not provide previously published surveying doctrine or theory and may be supplemented with commercially available texts or previous editions of technical literature.

Appendix A contains mensural conversion charts.

The proponent of this publication is HQ, TRADOC. Send comments and recommendations on Department of the Army (DA) Form 2028 directly to United States (US) Army Engineer School (USAES), Attention: ATSE-DOT-DD, Directorate of Training, 320 Engineer Loop, Suite 336, Fort Leonard Wood, Missouri 65473-8929.

Unless this publication states otherwise, masculine nouns and pronouns do not refer exclusively to men.

Chapter 1

Missions, Operations, and Duties

Surveyors determine horizontal and vertical distances between objects, measure angles between lines, determine the direction of lines, and establish points of predetermined angular and linear measurements. After completing field measurements, surveyors use these measurements to compute a final report that is used for positioning by field artillery (FA), air-defense artillery (ADA), aviation, intelligence, communications, or construction control points. Appendix B summarizes the standards for control surveys, Appendix C details the recommended procedures for basic survey computations, and Appendix D includes a list of survey forms.

SURVEY MISSIONS

1-1. Army topographic surveyors support multiple types of survey missions. These missions can be peacetime or wartime oriented.

SUPPORT DEPLOYABLE WEAPONS SYSTEMS

1-2. Army topographic surveyors support FA and ADA deployable weapons systems by acquiring position and azimuth data as follows:

- **FA.** FA is a primary user of precise positioning and orientation information in a wartime environment. Topographic-survey support is provided to the multiple-launch rocket-system (MLRS) units, the corps's general-support (GS) units, and other nondivisional assets in the corps area according to FM 6-2. FA requires that topographic surveyors provide monumented survey control points (SCPs) (horizontal and vertical) and azimuthal references for conventional and inertial FA survey teams. FA sometimes requires topographic surveyors to augment FA survey sections.
- **ADA.** ADA requires positioning and orientation information for ADA systems. ADA and FA have an agreement that FA surveyors (MOS 82C) will provide direct ADA survey support.

SUPPORT THE NATIONAL IMAGERY AND MAPPING AGENCY

1-3. The National Imagery and Mapping Agency's (NIMA's) geodetic survey division maintains US Army topographic surveyors as part of their survey force structure. These surveyors are involved as team leaders, as team members, and in the data-reduction process. In addition, these Army personnel are used in areas or situations where NIMA civilian personnel are not authorized (Saudi Arabia, Somalia, and so on). NIMA has the responsibility to provide earth-orientation data for the Navigation-Satellite Timing and Ranging (NAVSTAR) Global-Positioning System (GPS). NIMA

provides correlated World Geodetic System (WGS) 1984 (WGS-84) airfield surveys and geographical and aeronautical database information that are needed to support the aviation approach requirements. NIMA also determines transformation parameters between geodetic systems. In many areas of the world, the transformation parameters are uncertain or unreliable. During times of conflict, Army topographic surveyors may be required to collect data to enable NIMA to better formulate these transformation parameters.

SUPPORT THE US ARMY AERONAUTICAL SERVICES AGENCY

1-4. The US Army Aeronautical Services Agency (USAASA) requires periodic airfield and navigational-aid (NAVAID) surveys and airport obstruction charts (AOCs) according to Army regulation (AR) 95-2. These surveys are extensive field-survey operations that provide aeronautical and other information to support a wide range of National Airspace System (NAS) activities. AOC surveys provide source information on—

- Position.
- Azimuth.
- Elevation.
- Runways and stopways.
- NAVAIDs.
- Federal Aviation Regulation (FAR), Part 77 (FAR-77) obstructions.
- Aircraft movement and apron areas.
- Prominent airport buildings.
- Selected roads and other traverse ways.
- Cultural and natural features of landmark value.
- Miscellaneous and special request items.

1-5. The positioning and orientation information for NAVAIDs is required to certify the airfield instrument-landing approaches. AOC surveys also establish geodetic control in the airport vicinity, consisting of permanent survey marks accurately connected to the National Spatial Reference System (NSRS). This control and the NSRS connection ensure accurate relativity between surveyed points on the airport and between these points and other surveyed points in the NAS, including the navigation satellites.

SUPPORT THE US AIR FORCE

1-6. The US Air Force (USAF) requires positioning and orientation data for the initialization of Inertial Navigation Systems (INSs), INS test pedestals, NAVAIDs, and compass roses. The USAF relies on NIMA to satisfy all of its positioning and orientation requirements. Army topographic surveyors are currently assigned to assist NIMA in establishing survey control for the USAF.

SUPPORT THE US ARMY INTELLIGENCE AND SIGNAL ELEMENTS

1-7. The intelligence and signal elements require positioning information for remote-operated vehicles, remote sensing-and-imaging systems, antenna systems' geolocation and direction, inertial navigation initialization, situation awareness, and combat identification. This information includes the following:

- **Accuracy.** The accuracy requirement for intelligence and signal elements is similar to the accuracy expressed by FA and ADA. In many cases, intelligence and signal units can use the SCPs established for FA and ADA.
- **Frequency and timeliness.** The number of SCPs and the timeliness are dependent on the battlefield and the mission.
- **Distribution.** This survey information is distributed to each intelligence and signal battalion's operations section, Operations and Training Officer (US Army) (S3). Topographic surveyors are responsible for notifying the S3 of the various datums within the area of operation (AO). In addition, topographic surveyors provide the S3 with the necessary parameters and instructions on how to transform local coordinates to a predefined common grid (for example, WGS 84).

SUPPORT JOINT-LEVEL MISSIONS

1-8. During joint-level operations, topographic surveyors may be tasked to perform a number of different missions. Topographic surveyors are capable of providing support to allied nations for any of the aforementioned defined areas.

SUPPORT OTHER TOPOGRAPHIC MISSIONS

1-9. These other topographic missions are defined in AR 115-11, FM 5-105, unit table(s) of organization and equipment (TOE), and directives from higher headquarters (HQ). These missions—

- Provide precise positioning to support the updating of the MOS 81T (Terrain Analyst) database.
- Support construction surveyors (when projects require real-world coordinates).
- Establish and extend basic control for field surveys.
- Allow survey data and station description cards to be forwarded to NIMA, the organization's survey information center (SIC), and collocated terrain-analyst teams (upon request).

SURVEY OPERATIONS

1-10. The actual shape of the solid mass of the earth is referred to as the topography. A geoid is defined as the surface of the earth's gravity (attraction and rotation), which on the average, coincides with the mean sea level (MSL) in the open undisturbed ocean. A spheroid (also called an ellipsoid of revolution) appears as a figure that is flattened at the poles and bulging at the equator. It can be described using a mathematical formula that approximately defines a part of the surface of the geoid. However, because of the great variations in topography, many different ellipsoids exist. Because the earth's surface is irregular and pieces of mathematical computations are unreliable, the type of survey conducted depends on the purpose or level of accuracy required.

SURVEY TYPES

1-11. In plane surveys, all points are referenced to a flat plane with curvature wholly or mostly ignored. In geodetic surveys, all established points are referenced to the curved surface of a spheroid and, in all computations, the effect of curvature is computed.

Plane Survey

1-12. Plane surveys ignore the actual shape of the earth and apply the principles of plane geometry and trigonometry. These surveys are treated as if the measurements were made on a flat plane, with all lines being straight. When the survey area is less than 250 square kilometers and less accuracy is needed, curvature can be ignored. Most localized construction projects (highway and railroad) and boundary projects use plane surveys.

Geodetic Survey

1-13. Geodetic surveys take into account the size and shape of the earth. Since the stations in geodetic surveys are routinely spaced over extended distances, more precise instruments and techniques are required than for plane surveys. All observations are made on the actual curved surface of the earth and this curvature is corrected through computations.

SURVEY METHODS

Conventional Survey

1-14. Topographic surveyors use theodolites, levels, and distance measuring equipment (DME). The automated integrated survey instrument (AISI) provides topographic surveyors with the capability to extend control through the use of a total station.

GPS Survey

1-15. The NAVSTAR GPS is capable of determining accurate positional, velocity, and timing information. The GPS provides positional and navigational data to civilian and military communities in the form of two positional services. The Standard Positioning Service (SPS) encompasses the civilian user and the US Coast Guard (USCG). When using a single GPS receiver (absolute positioning), SPS users are denied the high-accuracy, instantaneous positioning capability of the GPS. The Precise Positioning Service (PPS) consists of military users and authorized representatives. PPS users can obtain high-accuracy, instantaneous positioning if the receiver is capable of accepting the necessary cryptologic variables.

1-16. Absolute and differential (relative) positioning methods using the GPS provide accurate and timely positional data. The method of choice depends on the accuracy required, the equipment available, and the logistical requirements. At present, the PPS GPS receiver, which is capable of performing relative positioning, is the GPS-survey (GPS-S) differential GPS (DGPS). The positioning methods are described as follows:

- **Absolute positioning.** Absolute positioning uses a single GPS receiver and does not require known survey control. Absolute positions can provide instantaneous (real-time) or postprocessed positions. Known survey control is unreliable or nonexistent in immature theaters. Topographic surveyors can establish SCPs by using absolute positioning.
- **Differential positioning.** Differential positioning uses two or more GPS receivers. One GPS receiver (reference receiver) is resident over a known SCP. The remaining receivers (remote receivers) are used to position points of interest. Differential positioning can be performed in real time or through postprocessing. If real-time positioning results are required, a communications link that is capable of transmitting digital data must be established at the reference- and remote-receiver locations. This method supports distances up to 100 kilometers between the reference and remote stations. The engineer battalions (topographic) within the Army have PPS GPS receivers that are capable of real-time and postprocessed differential positioning and provide relative accuracy of approximately 1 centimeter.

1-17. The accuracy of GPS-S is dependent on the user's equipment (precise lightweight GPS receiver [PLGR]) and the surveying method employed (absolute real-time or differential). Topographic surveyors have standardized PPS GPS receivers. These receivers have improved the efficiency and productivity of topographic surveyors and have provided the Defense Mapping School (DMS) and the USAES a background on the training, operational, and research and development requirements that are necessary to successfully field the GPS. The new GPS-S provides adequate absolute-positioning results and is designed to provide protection in a jamming/spoofing environment. The requirement for a PPS GPS receiver that is capable of performing DGPS when using the military's authorized, encrypted pseudorandom noise (PRN) code (Y-code) has been met. This receiver satisfies the positional accuracy requirements of the Army, the Department of Defense (DOD), and joint-level commands.

SURVEY CLASSIFICATIONS

1-18. Topographic surveyors are capable of conducting and supporting a wide variety of surveys. Surveys are classified as follows:

- Artillery.
- Basic control.
- Satellite.
- Construction.
- Airfield engineering and NAVAID.
- Hydrographic.
- Field classification and inspection.
- Land.
- Inertial.

Artillery Surveys

1-19. Artillery surveys are conducted to determine the relative positions of weapons systems to targets. These surveys do not require the accuracy of geodetic-surveying techniques despite the relatively large areas and long distances. The requirements, methods, and techniques used by military FA surveyors are detailed in FM 6-2 and Chapter 11 of this manual. ADA weapon systems require accuracies that are obtainable only from geodetic-surveying techniques.

Basic-Control Surveys

1-20. Basic-control surveys provide horizontal and/or vertical positions of points. Supplementary surveys may originate from and can be adjusted to these surveys. The basic-control survey of the US provides geographic positions and plane coordinates of triangulation/traverse stations and the elevations or benchmarks (BMs). This information is used as the basis for the control of the US national topographic survey; the control of many state, city, and private surveys; and hydrographic surveys of coastal waters. The techniques and methods used by military geodetic surveyors are discussed in this manual.

Satellite Surveys

1-21. Satellite surveys determine high-accuracy, three-dimensional (3D) point positions from signals received by NAVSTAR GPS satellites. GPS-derived positions may be used to provide primary reference-control monument locations for engineering and construction projects from which detailed site plans, topographic mapping, boundary demarcation, and construction-alignment work may be performed using conventional-surveying instruments and techniques.

Construction Surveys

1-22. Construction surveys provide data for planning and cost estimating. This data is essential to locate or lay out engineering works and is recorded on engineer maps. Plane surveys are normally used for construction projects. The methods and techniques used by military construction surveyors are detailed in FM 5-233.

Airfield-Engineering and NAVAID Surveys

1-23. Airfield-engineering and NAVAID surveys are used to determine any combination of the following:

- The location of obstacles within 10 nautical miles of an airfield center.
- The dimensions of runways and taxiways, the height of flight towers, and NAVAIDs.
- The safe approach angles to runways and the minimum, safe glide angle.
- The elevation of the barometer on an airfield.
- The positions and azimuths of points designated for INS checkpoints.

- The requirements of the Federal Aviation Administration (FAA), United States Army Aeronautical Services Agency USAASA, or equivalent military activity.
- The information used to assist a military-aircraft crash or disaster incident investigation.

Hydrographic Surveys

1-24. Hydrographic surveys are made on large bodies of water to determine channel depths for navigation and the location of rocks, sandbars, lights, and buoys. In rivers, these surveys are made to support flood-control projects, power development, navigation, water supplies, and water storage.

Field-Classification and Inspection Surveys

1-25. Field-classification and inspection surveys can help to identify features not normally revealed using a compiler (for example, political boundary lines, names of places, road classifications, and buildings obscured by trees). These surveys can also clarify aerial photographs by using comparisons with actual ground conditions.

Land Surveys

1-26. Land surveys are used to locate the boundaries and areas of tracts of land. These surveys may be done on a city, county, state, national, or international level.

Inertial Surveys

1-27. Inertial surveys are used to determine relative positions and azimuths. The Position and Azimuth Determination System (PADS) is now being used extensively to support artillery surveys.

SURVEY NETWORKS

1-28. Each survey has a fundamental classification of control points called a *network*. There are several different types of networks. A network of control areas usually establishes horizontal and vertical SCPs within a country. These areas are all referenced to a single datum and are related in position or elevation to each other. Networks are classified as basic, supplementary, and auxiliary. All horizontal networks in the US are referenced to the North American Datum (NAD) of 1927 (NAD 27) and the NAD of 1983 (NAD 83) (NAD 83 and WGS 84 are the same), with coordinates currently being published in both. The National Geodetic Vertical Datum of 1929 (NGVD 29) and the North American Vertical Datum of 1988 (NAVD 88) are used for vertical control points. Within the continental US (CONUS), the following terms are used:

Basic Horizontal-Control Networks

1-29. Basic horizontal-control networks are usually established by first-order geodetic-triangulation, traverse, or GPS procedures. The lines of the basic network are spaced at intervals of about 96 kilometers throughout a country.

Basic Vertical-Control Networks

1-30. Basic vertical-control networks are established by first-order differential leveling along lines spaced from 90 to 160 kilometers apart throughout the country. Permanent BMs (PBMs) are spaced at intervals of about 3 kilometers on these lines.

Supplementary Horizontal-Control Network

1-31. Supplementary horizontal-control networks are usually established by second-order survey techniques. These supplementary networks are used to fill in the areas between the basic-control lines. Ultimately, either a basic or a supplementary network station will be spaced at intervals of about 6 to 16 kilometers across a country.

Supplementary Vertical-Control Network

1-32. Supplementary vertical-control networks are established by second-order differential leveling. These lines are run within the basic-control lines to provide a planned control-line spacing at intervals of about 10 kilometers. PBMs are emplaced at intervals of about 2 kilometers apart on these lines.

Auxiliary Horizontal-Control Networks

1-33. Horizontal auxiliary-control networks are usually established by second- or third-order survey techniques. They provide localized control to be used by surveyors for artillery control, construction-engineering surveys, mapping projects, or other positioning requirements. As more states and other agencies require geodetic accuracy for boundary and property surveys, they will use these networks.

Auxiliary Vertical-Control Networks

1-34. Auxiliary vertical-control networks are established by third-order differential leveling and are used to provide localized vertical control. They are also used to support artillery, construction, and engineering projects.

SURVEY EQUIPMENT

Conventional Survey Equipment

1-35. Topographic surveyors have theodolites, levels, and electronic DME (EDME) within their inventory. The AISI provides topographic surveyors with the capability to extend control in a timelier and more efficient manner. The AISI is a total station that combines angular, distance, and vertical measurements into a single electronic instrument that is designed to digitally record and transfer data into a personal computer (PC).

NAVSTAR GPS

1-36. The NAVSTAR GPS is capable of determining accurate positional, velocity, and timing information. The PPS consists of military users and authorized representatives. A PPS user can obtain high-accuracy instantaneous positioning if the receiver is capable of accepting the necessary

cryptologic variables. When two or more receivers are used, it is called DGPS surveying. The error values are determined and removed from the survey either by real-time processing or postprocessing of the data. The type of DGPS survey used is dependent on accuracy requirements. There are two basic types of DGPS surveys—static and dynamic.

- **Static survey.** Static surveying uses a stationary network of receivers that collect simultaneous observations over a predetermined time interval and yield the best accuracy.
- **Dynamic survey.** Dynamic surveying uses one stationary receiver and any number of remote or roving receivers. It allows for rapid movement and the collection of data over a large area. When operating in the real-time mode, the roving receiver can provide very accurate positions almost instantaneously on the battlefield.

Computer Information Systems

1-37. Surveying has become a digital science. Modern survey systems work with software specifically designed to process field data, perform computations, and produce a precise product, whether it be a GPS network, a digital database, or a computer-aided design (CAD) and drafting (CADD). GPS-S computations require a PC to process large amounts of mathematical variables. Efforts should be ongoing to obtain or upgrade to the fastest system available. Computer resources are standardized throughout TOE units with topographic surveyors. Application (such as databases or word processing) and functional (such as adjustment or CAD) software packages have increased the efficiency and productivity of topographic surveyors. The SIC collects and disseminates the positioning and orientation requirements for such organizations as NIMA, FA, ADA, Armor, and the USAF and maintains a digital database capable of archiving, querying, and manipulating survey control. Topographic surveyors are equipped with common GPS hardware and software and CAD and survey-application software.

SURVEY-PERSONNEL DUTIES

1-38. Topographic surveyors supervise and/or conduct surveys to provide control data for mapping, artillery, and aviation support and supervise or perform topographic or geodetic computations. Duties for MOS 82D (at each skill level) are identified below.

MOS 82D10

1-39. Skill level 1 surveyors—

- Record topographic-survey data.
- Operate and collect data with a GPS, electronic and mechanical theodolites, EDME, and differential-leveling equipment.
- Perform topographic computations; compute elevations of tidal BMs and baselines; and transport, set up, operate, and maintain equipment according to written, oral, or visual instructions from supervisors.
- Prepare abstracts of field data for final computations.

- Assist in the emplacement and recovery of control stations and prepare station description cards.
- Compute abstracted survey data for final tabulation.

MOS 82D20

1-40. Skill level 2 surveyors—

- Transport, set up, operate, and maintain equipment according to written, oral, or visual instructions from supervisors.
- Make field checks to ensure that field measurements meet project specifications and classifications.
- Perform observations and compare, standardize, and calibrate survey equipment.
- Input field-survey data into CAD programs and process CAD data into final products.
- Transfer, process, and adjust GPS data by using survey software and PCs.
- Compute and adjust first-, second-, and third-order horizontal- and vertical-control surveys.
- Perform preliminary and field computations to verify field observations for control surveys and compute preliminary values of horizontal and vertical control points.
- Convert grid and geodetic coordinates and transform (in the same system) coordinates and azimuths from one zone to adjacent zones.
- Operate and write programs for programmable electronic calculators.
- Operate PCs.
- Direct and control personnel when acting as a survey-party chief.

MOS 82D30

1-41. Skill level 3 surveyors—

- Supervise and direct topographic surveys.
- Prepare project progress reports and conduct project briefings.
- Recommend the method of computation and adjustment and the need for additional data.
- Evaluate and verify results of all computations.
- Direct the transportation, setup, operation, and maintenance of equipment according to written, oral, or visual instructions.
- Perform a survey recon (to include picture-point selection) and main and secondary survey-station placement and evaluate field data and the results obtained.
- Plan and analyze the collection of traverse, triangulation, leveling, and satellite data and isolate computational or field blunders.
- Supervise CAD survey operations.

MOS 82D40

1-42. Skill level 4 surveyors—

- Plan and approve topographic surveys.
- Supervise recon studies and reconnoiter survey sites to determine special requirements of obstacles encountered.
- Plan and arrange logistical support for topographic-survey activities.
- Plan and organize work activities.
- Coordinate surveying and computing activities.
- Supervise field-survey activities in support of task and mission requirements.
- Determine composition and operational techniques of topographic-survey parties.
- Perform quality checks on survey data.
- Collect available charts, maps, control lists, aerial photographs, and other topographic data that are necessary to maintain a deployable database.
- Disseminate survey data.
- Serve as the technical authority in all survey matters.

FIELDWORK

1-43. Topographic surveyors perform most of their operational duties away from the parent unit. Topographic surveying involves fieldwork over a project area or battlefield. Survey fieldwork consists of making observations and measurements; recording data; and returning the data to a computer and/or draftsman for computation, compilation, and dissemination. Surveyors must overcome many factors that combine to affect working conditions. They must be constantly alert to various factors such the following:

- **Weather and terrain.** Weather and terrain can adversely affect field surveys. The effectiveness of optical and electro-optical instruments can be severely reduced by fog, mist, smog, or ground haze. Swamps and floodplains under high water can impede leveling operations. Signals from the GPS constellation generally require a clear line of sight to the sky. Urban and forested areas can mask or deflect the direct signal that is needed for accurate measurements. Good recon and proper planning can alert the field parties of the best times and methods to use.
- **Personnel.** The rate of progress often varies in direct proportion to the training and experience level of the assigned personnel. The most effective method of training personnel is under conditions where their actions have real consequence as opposed to mere practice. On-the-job training produces a measurable product but frequently results in lost work due to correcting mistakes.
- **Equipment.** Equipment reliability must be considered when setting completion dates. Modern, well-maintained equipment can often increase the rate of progress. Older equipment, if properly maintained or adjusted, will yield accurate results. Repairing or replacing broken instruments or parts will sometimes slow down or stop a field survey. Equipment must be calibrated as part of combat checks before the survey mission begins.

- **Purpose.** The purpose and the type of survey will determine the accuracy requirements. Control networks are established by using high-accuracy GPS, triangulation, traverse, or leveling procedures. At the other extreme, cuts and fills for a highway have much lower standards. In some surveys, distances to inaccessible points must be determined. High-accuracy distance and angle measurements are required so that these values, when used in trigonometric formulas, will yield acceptable results. This type of survey is directly dependent on the clearness of the atmosphere. Observing measurements for a single position can be delayed for days while waiting on good weather.
- **Accuracy.** Accuracy requirements will dictate the equipment and techniques selected. For instance, comparatively rough techniques can be used for elevations in site surveys, but control-network leveling requires much more precise and expensive equipment and extensive, time-consuming techniques.
- **Errors.** All measurements contain some amount of error. Errors classified as systematic and accidental are the most common uncontrollable errors. Besides errors, measurements are susceptible to mistakes or blunders that arise from misunderstanding the problem, poor judgment, confusion, or carelessness. The overall effect of mistakes and blunders can be greatly reduced by following a preestablished systematic procedure. This procedure will be advantageous in all phases of a survey.
- **Progress rates.** Rates of progress vary, depending on experience and repetition. As skill and confidence increase, so does speed. Proper preparation and planning reduce duplication of effort and increase efficiency.
- **Enemy.** A hostile environment often forces a schedule adjustment. Night work requires greater speed, fewer lights, and increased security. Adding security forces increases the number of vehicles and personnel, which in turn, reduces efficiency and retards even the most ambitious time schedule.

OBSERVATION OF DISTANCES AND DIRECTIONS

1-44. Topographic surveyors observe distances and/or directions (angles) for the following reasons:

- To establish GPS, triangulation, and traverse stations for basic, supplementary, and auxiliary control networks.
- To establish gun and target positions for artillery batteries.
- To establish horizontal control to support PADS.
- To establish point and lines of reference for locating details (such as boundary lines, roads, buildings, fences, rivers, bridges, and other existing features).
- To stake out or locate roads, buildings, landing strips, pipelines, and other construction projects.
- To establish lines parallel to, or at right angles to, other lines or to determine the area of tracts of land, measure inaccessible distances, or extend straight lines beyond obstacles.

- To establish picture points for databases.
- To do any other work that requires the use of geometric or trigonometric principles.

OBSERVATION OF DIFFERENCES IN ELEVATIONS

1-45. Topographic surveyors observe differences in elevation (DEs) for the following reasons:

- To establish BMs for basic, supplementary, or auxiliary vertical-control networks.
- To determine DEs of terrain along a selected line for plotting projects and computing grade lines.
- To stake out grades, cuts, and fills for earthmoving and other construction projects.
- For trigonometric elevations of triangulation and traverse stations for control networks and mapping projects.
- To establish gun and target positions for FA batteries.

RECORDING OF FIELD NOTES

1-46. Topographic surveyors record field notes to provide a permanent record of the fieldwork. These notes may take any of the following formats:

- Field-recording booklets.
- Single-sheet recording forms.
- Digital disks or devices for automated data recording.
- Land-survey plans.
- Property plans.
- Recovery and station description cards.
- Control diagrams showing the relative location, method, and type of control established and/or recovered.

Even the best field survey is of little value if the field notes are not complete and clear. The field notes are the only records that are left after the survey party leaves the field site. Surveyors' notes must contain a complete record of all measurements or observations made during the survey. When necessary, sketches, diagrams, and narration should be made to clarify notes. Write overs, erasures, or use of correction tape or fluid are strictly forbidden. These actions, when prohibited by the unit's survey standing operating procedure (SOP), are cause for punishment under the Uniform Code of Military Justice. Recording errors are to be lined out and initialed by the recorder and the corrected reading entered on the recording form.

Quality

1-47. Good field notes share the following qualities:

- **Neatness.** The lettering should conform to the gothic style portrayed in FM 5-553. All entries should be formatted according to unit SOPs.
- **Legibility.** Only one interpretation should be possible. Decimal points and commas must be clear and distinct.

- **Completeness.** All entries should be complete, and all resolved data must be finished according to unit SOPs. All entries must—
  - Be done on the correct forms and entirely in the field. Never record notes on scrap paper and then transcribe them to a field-recording form. If performing an underground survey, use a covered clipboard to protect the notes.
  - Accurately describe the field experience. Sketches, diagrams, and notes will reduce or eliminate questions.

Organization

1-48. Survey notes are usually kept in a field notebook, on individual recording forms, or in an automated data collector. Loose-leaf sheets should be numbered serially to ensure that all sheets are kept and turned in. Regardless of the format used, include—

- The instructions for the return of the notes or cassette tapes (specify any special-handling requirements) in case they are lost. Usually, they should be returned to the commander of the particular unit.
- An index of the field notes and a cross-reference to additional books or binders.
- A list of party personnel and their duties and the project's beginning and ending dates.
- A list of instruments used (include types, serial numbers, calibration dates, constant values, and dates used).
- A generalized sketch and description of the project.
- The actual survey notes on each page that contain data. Fill out the heading and include the following information:
  - The station names (include the establishing agency and date).
  - The survey date.
  - The names and survey duties of personnel (for example, instrument operator or note keeper).
  - The instruments used (include the serial numbers).
  - Weather data.
  - The actual observed data (include all required reductions).
  - Pertinent notes, as required.
  - The observer's initials at the bottom right corner of the recording form (indicating that the observer has checked all entries and ensures that they are correct).

Format

1-49. Recording of field notes takes three general forms—tabulations, sketches, and descriptions.

- **Tabulations.** Numerical data is recorded in columns following a prescribed format, depending on the type of operation, the instrument used, and the specifications for the type of survey.
- **Sketches.** Sketches add much to the clarity of field notes and should be used liberally. They may be drawn to scale (as in plane-table

surveys), or they can be drawn to an approximate scale (as in control cards). If needed, use an exaggerated scale to show detail. Measurements should be added directly on the sketch or keyed in some way to avoid confusion. Sketches require the same quality as other field notes.

- **Descriptions.** Tabulations with or without sketches can also be supplemented with narrative descriptions. The description may consist of a few words, or it may be very detailed. Survey notes become a part of historic records, so a brief description entered at the time of the survey may be important and helpful in the future.

1-50. **Abbreviations and Symbols.** Standard abbreviations, signs, and symbols should be used in all survey notes and must be consistent with guidelines in such publications as AR 310-50 and FMs 21-31 and 101-5-1. Spell out words if there is any doubt about the meaning or interpretation of a symbol or abbreviation.

1-51. **Corrections.** Field notes are considered legal documents and can be used in court proceedings. As such, no erasures or write overs are permitted. No position will be voided or rejected in the field, except in the case of disturbing the instrument or target or observing the wrong target. In either case, the position should be reobserved and the location of the reobserved data should be noted in the remarks section. Follow these rules for making corrections:

- **No erasures.** All fieldwork will be done in black or blue-black ink (with no erasures) that is suitable for photocopying. The only exception is the field sheet of a plane-table survey.
- **No write overs.** Field notes show what happened in the field. If a number is changed, make a single slanted line through the incorrect number. The individual making the corrections inserts the correct number directly above or next to the corrected value, creating the new entry and initialing the change. A note will be entered in the remarks column stating why the number was changed.

OFFICE WORK

1-52. Surveying procedures also consist of converting the field measurements into a more usable form. Usually, the conversions or computations are required immediately to continue the fieldwork. At other times, they must be held until a series of field measurements is completed. This is called office work even though some of the operations may be performed in the field during lapses between measurements. Some office work requires the use of special equipment (calculators, PCs, or drafting equipment) or extensive references and working areas. During survey operations, many field measurements require some form of arithmetical computation. For example, adding or subtracting DEs to determine the height of instrument (HI) or elevation during leveling or checking angles to see that the allowable error (AE) is not exceeded.

COMPUTING

1-53. Office computing converts distances, angles, GPS measurements, and rod readings into a more usable form or adjusts a position of some point or

mark from which other measurements can be made. This process involves the computation of—

- **Distances.** The desired result is the horizontal distance between two points. In electronic distance measurement (EDM), the distance is usually on a slope and has to be corrected for temperature and barometric pressure and then reduced to the correct horizontal distance.
- **Azimuths and bearings.** In many operations, the observed angles are converted into directions of a line from north (azimuths) or north-south (bearings).
- **Relative positions.** The distance and direction of a line between two points determine the position of one point relative to the other point. If the direction is given as an azimuth bearing, a trigonometric formula (using the sine or cosine of the angle multiplied by the distance) can be used to determine a coordinate difference between the two points.

ADJUSTING

1-54. Some survey techniques are not complete until one or more of the following adjustments are performed. Adjusting is the determination and application of corrections to data. Adjusting provides a means of dealing with the random errors in a survey network and causes the data to be consistent within itself and to a given set of references. Small errors that are not apparent during individual measurements can accumulate to a sizable amount. In a linear adjustment, for example, assume that 100 measurements were made to the nearest unit and required determining which unit mark is closer to the actual measurement. Adjusting the result requires reducing each measurement by the product that results from dividing the error by the number of measurements. Since the measurements were only read to the nearest unit, a single adjustment would not be measurable at any point and the adjusted result would be correct. Some of the more precise surveys require least-square adjustments.

- **GPS network and least-square adjustment.** A least-square adjustment is the basis for correcting GPS (and traverse) networks that use automation to compute solutions in geometry and produce geodetic accuracy. A least-square adjustment in a survey network allows for the computation of a single solution for each station and minimizes the corrections made to the field observations. A least-square adjustment uses probability in determining the values for particular unknowns, independently weighs all field observations, highlights large errors and blunders that were overlooked before adjustment, and generates information for analysis after the adjustment (including estimates of the precision of its solutions).
- **Traverse.** Traverse is the measurement of lengths and the determination of directions of a series of lines between known points that establishes the coordinates of the intermediate points. When computed, the accumulated closing error shows up as a position displacement of a known point. The displacement is corrected and distributed among the intermediate (traverse) points.

- **Elevation.** Depending on the purpose, the elevations on some level lines are computed as the measurements are taken. When the line is closed, the DE between the measured and the known elevation is adjusted over all the stations in the line. In higher-order leveling, only the DEs are recorded during the measuring and all adjusting is done at the completion of the line. The error is then distributed among the various sections of the line.

ESTABLISHING RECORDS

1-55. Office computations reduce the field notes to a tabular or graphic form. They become a permanent record and are stored for further use or subsequent operations. Many standardized forms are available and should be used. As long as the sheets are clearly identified and bound as a set, they are acceptable. Normally, all field notes should be abstracted and filed separately. The abstracts should be bound along with all computing forms into a single binder or folder and maintained on file for further reference. All pages should have the name and date of the person performing the work and at least one person who verified that page. Do not dispose of or destroy any of these records.

CHECKING

1-56. Surveying involves a series of checks. The field notes should be checked by the observer, the recorder, and the party chief before they are turned in for office work. Before computing, the assigned person should check the notes again. Most mathematical problems can be solved by more than one method. In checking a set of computations, it may be desirable to use a method that differs from the original computation method. An inverse solution may be used, starting with the computed values and solving for the field data or a graphic solution. Each step that cannot be checked by any other means must be checked by a totally independent recomputation by another individual. Any errors or mistakes that are found must be resolved and rechecked before the computation is accepted.

SURVEY COMMUNICATION

1-57. Survey-party members may find themselves separated. The ability to communicate with each other may mean the difference between successfully completing a section of work or not. Even at relatively short distances (as in site surveys or leveling operations), background noises can obscure direct voice contact. At longer distances, such as in EDM or direction-measurement operations, effective direct voice contact is impossible. Therefore, some other type of communication is required.

VOICE

1-58. On long lines, where hand signals are impossible, a radio must be used. Each theater of operations or Army command has published communications-electronics operation instructions (CEOI) that units must follow. Only frequencies obtained through the local signal officer may be used. All personnel must be familiar with the CEOI and the unit's communications

SOP before using a radio. All radio communications must be kept as short and secure as possible.

1-59. Over shorter distances, during all types of site surveys, the AISI provides one-way voice communication. Two-way communication is preferred for short distances. Most units have some type of hand-held radios, although they are not TOE equipment. These radios should be able to communicate up to 5 kilometers and should not be limited to line of sight only. Portability, ease of operation, and frequency programmability should be considered when procuring this type of communication equipment. Military hand-held radios are readily available in most military communities.

1-60. TOE changes are replacing frequency modulated (FM) radios with Single-Channel Ground-to-Air Radio Systems (SINCGARSs). The need to communicate across large distances is increasing in frequency. GPS-Ss are conducted at distances of up to 25 kilometers and depend upon synchronization between receivers during data collection. Any disruption from a single station in a GPS network can result in a total loss of effort.

DIGITAL

1-61. The primary focus of survey operations during wartime is to operate quickly over large distances. This requires the ability to transmit data digitally over the battlefield. The type of data will be largely or entirely GPS data. In order for a survey team to provide accurate positions where needed and in a timely manner, they need to operate in real time without having to process out the error code embedded in a GPS signal. The process of real-time GPS surveying begins with a base-station receiver that broadcasts corrections to the signals emanating from the GPS satellites. Army surveyors have the following two means of transmitting this data:

- **Radio modem.** Surveyors have a radio modem that is designed primarily for broadcasting DGPS corrections or raw GPS data from a survey base station to one or more roving receivers for real-time differential or kinematic (RTK) surveying. These radio modems require line of sight between each radio modem. They can be set up in a series of repeating stations that extend across the survey area. This system is effective only over a small, local area.
- **SINGARS.** The primary system for data transmission over the distances required on the battlefield is SINCGARS. GPS-S is designed to transmit encrypted GPS data over SINCGARS. Any user that can receive the data will have a real-time correction to the broadcast GPS signal. This gives topographic surveyors the operational capability to perform the mission under circumstances where GPS signals are dithered or spoofed on the battlefield. A GPS signal can be retransmitted over a communication network to multiple users, which extends the range and capability of survey operations.

MISCELLANEOUS

1-62. Mirrors and lights can also be used for communication. A signal mirror can use the sun as a light source and is a fairly accurate sighting device. Morse code or other prearranged signals can be used to effectively

communicate during the day. At night, the same signals can be used with a light.

Chapter 2

Project Planning

Survey operations, whether under combat conditions or not, are like any other military operation and must be carefully planned. Enthusiasm, technical proficiency, and dedication do not make up for poor planning. All plans must be dynamic in nature and must be constantly evaluated and updated. This chapter addresses project planning, primarily from a logistics and administrative standpoint. Most of the information contained in this chapter is concerned with prebattle operations. Some technical planning will be addressed, but only as it impacts on logistics and administrative support. Project planning can be divided into three phases: evaluation and scheduling, information-gathering trips, and project execution.

SECTION I - EVALUATION AND SCHEDULING

2-1. Evaluation and scheduling includes the initial project evaluation, determination of the project requirements, assessment of the unit's ability to accomplish the project, determination of a preliminary plan and milestones, and coordination of the necessary administrative and logistical support. After receipt of a project directive, project planning begins. This preliminary planning involves evaluating the directive, assessing the unit's capability, and determining a preliminary schedule of events. It is important that all estimates, including time and funds, be labeled as preliminary for all reports or briefings. Many survey missions are in areas where government lodging and meals are unavailable or impracticable. The customer must be made aware of the scope and pace of survey operations and what the impact may be if operations are restricted to a set schedule. This must be done to provide the customer, supported units, or higher HQ with an accurate picture of the extent and cost of a project.

PROJECT REQUIREMENTS

2-2. The first step in project planning involves evaluating the requirements as stated in the project directive. In many instances, requests will come from offices or units that have no real knowledge of survey requirements. The support request must be carefully evaluated to ensure that what the customer has ordered is, in fact, what the customer needs. This evaluation is usually done by the survey noncommissioned officer in charge (NCOIC). Generally, the project directive can be classified in one of the following three cases of requirement versus need:

- The customer has requested work that is more accurate than is needed.

- The customer has requested work that is less accurate than is needed.
- The customer has requested work that matches the need.

2-3. In the first case, the customer is typically not survey-oriented and only sees the orders and classes of accuracy as words and numbers on a page. The customer does not understand the differences and the cost implications of each. Generally, a telephonic explanation of the differences in the orders of accuracy will resolve most potential conflicts. In those cases where the customer cannot be swayed from an erroneous perception of the orders of accuracy, an explanation of the cost differences will generally change the customer's mind. If the customer remains adamant about the request, start planning to accomplish the original request.

2-4. In the second case, the customer must be contacted and the differences in the orders of accuracy explained. Since funding costs usually go up or down in direct proportion to the order or class of accuracy, it may be difficult to change the customer's attitude about the request. If the customer cannot be swayed, start planning to accomplish the original request.

NOTE: Careful documentation of all contacts and conversations with the customer should be kept, especially in the first two instances. At some future date, the customer may realize that the survey unit gave good advice and may wish to change the initial request. If the recommendations for change are not documented accurately, the unit may be liable to correct a project without additional funding.

2-5. In the third case, planning can begin immediately. This is usually the case when dealing with other military units that are routine survey users.

UNIT CAPABILITIES

2-6. Assessing the unit's ability to conduct any type of survey is perhaps one of the most difficult tasks. Fortunately, many mechanisms exist to assist in this evaluation. The single best indicators are the commander's and the survey-section leader's personal familiarity with the soldiers. Since this is not always accurate, a number of systems have been established to help in this evaluation. Two of these systems are as follows:

- **Army Training and Evaluation Program (ARTEP).** ARTEPs contain mission training plans (MTPs), battle drills, and evaluation guides for assessing a unit's ability to conduct various team tasks.
- **Unit files.** These files contain information on a unit's past performance on similar projects. They contain the names of personnel who conducted the project and the duration time. Any previous problems are listed and explained in great detail.

2-7. This information can prove to be very valuable, not only for assessing the unit's ability to conduct the project, but also in planning the project as a whole. A listing of the unit's training deficiencies can be generated. The survey-section leader can develop a training program to address any shortcomings. This program has to be designed around the project milestones. The tendency to assign the most qualified personnel should be avoided. Usually, a mix of highly qualified and entry-level soldiers should be assigned to any project to ensure that new people get the experience they need.

ACCURACY CONSTRAINTS

2-8. The Federal Geodetic Control Committee (FGCC) established the Standards and Specifications for Geodetic Control Networks (SSGCN). These standards define the orders of accuracy for geodetic work conducted in the US. These SSGCN are used to ensure uniformity of all work conducted to support and extend the US National Control Network. The Army, through the US Army Corps of Engineers (USACE), is a member of the FGCC and has agreed to comply with the SSGCN. All Army survey activities conducted within the US should be in compliance with these standards.

2-9. When possible, surveys in other nations should also comply. Due to military necessity, there will be occasions when compliance is not possible due to mission requirements. Some of these situations may involve the following:

- Projects conducted in a time of war.
- Projects conducted as training exercises designed as realistic war-training exercises.
- Projects not intended for inclusion in the US National Control Network.
- Projects conducted to support consumer requests that are specifically exempt.

2-10. When feasible, all field activities should conform to the SSGCN. At some later date, it may be determined that any given project should have been included in the US National Control Network. If the fieldwork was in total compliance, only the computations will need to be refined.

MILESTONES

2-11. Milestones are developed for estimating project duration and cost and for managing personnel and resources. Milestones generally take the form of a timeline, with the events noted as they should occur. A timeline allows a commander or a customer to see, at a glance, how a project is proceeding. This manual gives general tips on the development of timelines for all types of survey activities. Under combat conditions, it may not be feasible to develop precise timelines. The flow of a battle may dictate dramatic changes to milestones, and most work will have to be accomplished with a very short suspense. In these situations, developing a timeline may be time consuming and counterproductive. Under normal prebattle operations, it is feasible and advisable to develop milestones. Care should be taken to ensure that the resulting timeline is not overly ambitious.

2-12. There are a number of variables associated with any timeline. These include, but are not limited to, the following:

- Availability and type of equipment.
- Experience of personnel.
- Terrain, vegetation, and weather.
- Extent or area of project.
- Priority of other projects.
- Enemy or adversary intervention.

Table 2-1 shows typical rates of progress for various types of survey operations. These are only rule-of-thumb estimates. Each unit must develop its own rates-of-progress table based on the equipment and the level of expertise of assigned personnel.

Table 2-1. Typical Rates of Progress for Third-Order Surveys Using One Survey Squad

Basic Figure	Survey Method		Average Distance per Setup	Hours per Setup by Average Distance	Daily Progress (10-Hour Day)
Nonlinear	GPS	Static	100 km	4.0	200 km
			50 km	3.0	150 km
			10 km	2.1	40 km
		Kinematic/RTK	25.0 km	2.00	NA
			1.0 km	0.50	NA
			0.1 km	0.10	NA
Linear	Traverse		5.0 km	1.25	40.0 km
			2.0 km	0.75	25.0 km
			1.0 km	0.50	20.0 km
	Leveling (differential, 3-wire, loop)		200.0 m	Minutes per setup	6.0 km
			150.0 m		4.5 km
			100.0 m		3.0 km

NOTES:
1. Times are subject to delay due to the weather, the road conditions, or the tactical situation.
2. The survey squad consists of seven personnel.
3. GPS sessions are using four receivers per session.
4. The daily progress for RTK surveying is dependent on a network of repeater stations to transmit the signal corrections between the base station and the roving receivers.
5. GPS-network coverage areas depend on the network geometry and the availability of suitable terrain for each setup.

2-13. Project schedules can be established using several different approaches. The two most common approaches are to establish the schedule based on a firm start or end date. The procedures are similar in both cases, with the following differences:

- If the start date has been firmly established, then the project is laid out from beginning to end with each event occurring as it will happen.
- If the end date has been established, then the project must be planned in reverse. That is, events that occur last must be programmed from the end of the project backward until a start time is established.

2-14. In all cases, schedules must be realistic but not overly ambitious. Delays due to weather, equipment, personnel shortcomings, or any other problems must be built into the schedule. In most cases, it is better to estimate a longer duration time and finish early than to underestimate and miss a scheduled end date.

ADMINISTRATIVE SUPPORT

2-15. Administrative support is normally concerned with documentation, both technical and nontechnical. Technical documentation usually includes typing reports, tabulating and preparing technical data, or preparing briefing materials. The survey team, with limited help from clerical personnel, often accomplish these technical administrative actions. Nontechnical documentation usually involves personnel actions and is performed by specialists in the Personnel and Administration Center (PAC), the Adjutant General (AG) Office, or the finance and accounting office (FAO). This portion covers general guidance about what should be accomplished and when, primarily with peacetime operations conducted elsewhere than at the unit's installation. Wartime requirements are addressed in various SOPs of the unit, parent unit, and major Army commands (MACOMs).

PRIOR TO DEPLOYMENT

2-16. Before a survey unit deploys to another installation or area, a number of administrative actions should be accomplished. All routine personnel actions for survey-party members should be accomplished to ensure that there will be minimal actions while deployed. All soldiers should make sure that their pay portions, allotments, insurance statements, and other financial requirements are updated. Other actions that may be required are powers of attorney and routine medical checks. If a long duration time is anticipated, all personnel should schedule a records review, to include promotion packets, personnel and finance records, and emergency data cards.

2-17. After all these actions have been completed, there will theoretically be no need for nontechnical administrative support. In reality, new actions will be required from time to time. Therefore, the party chief should make arrangements for handling any actions that may be required during the project. The local installation PAC or AG should provide this information. Depending on the nature of the required action, the party chief may be able to submit the paperwork through the mail. If these actions cannot be done through the mail or telephonically, a visit to the AG at the project installation or the nearest military facility may be required.

DURING A PROJECT

2-18. There will be times when a party chief or an individual is not able to complete a required action. The home installation should provide guidance to the party chief on how to address these problems. If the project is being conducted on a military installation, the party chief should check in with the local AG upon arrival, before any problems are encountered. Contact with the AG at the project installation should be made during the recon phase and a point of contact (POC) established. This will alert the AG that the survey unit is in the area, and the AG will usually give any assistance they can.

2-19. As is often the case, the project may be in an area other than on a military reservation. In the US, there will usually be a military representative who can assist. It may be possible to arrange for limited support from a local office of the Army Recruiting Command, the Army Reserve, or the Army National Guard. Regardless of the source, contact should be established before

assistance is needed. Technical administrative support will usually be nonexistent and is the responsibility of the survey team.

AFTER A PROJECT

2-20. Nontechnical administrative support after project completion is the same as prior to deployment. The local PAC, AG, and FAO will handle these actions. These actions include filing travel vouchers, initiating new personnel actions, and reviewing personnel and finance records. The parent unit will be able to assist with technical administrative support, which normally involves finalizing reports and information.

LOGISTICS SUPPORT

2-21. This segment gives general guidance on the types of logistics arrangements and planning that should be accomplished. Many of these topics are covered in very general terms. The numerous requirements of the various MACOMs and GS units prohibit this segment from being all-encompassing.

MOVEMENT PREPARATION

2-22. Moving a unit of any size takes careful and thorough planning. Much of the specific information concerning preparation for moving a survey section or unit will be contained in the unit's or the parent organization's SOP. It is imperative that all equipment and personnel move as cohesively as possible. Movement plans should be developed well in advance of any anticipated moves and should cover all contingencies. They should address moving individual elements and/or the entire unit. Most of the requirements for movement are described in FM 55-10, which is a concise reference manual and should be available when preparing any movement plans. The information in this FM is applicable to most wartime and peacetime situations. In some cases, a MACOM will draft supplemental material.

COMMUNICATIONS

2-23. One of the most important and often overlooked aspects of any successful operation is communication. During movement (regardless of the mode of transportation), the unit will normally be dispersed in convoys. During field-survey procedures, the field teams will be located throughout the corps area. It is imperative that the elements of the unit have the ability to communicate with the command and control section.

2-24. Planning for communication support requires the same careful attention to detail as any other aspect. Depending on the nature of the operation, a determination must be made of how much and what type of communication equipment will be required. Normally, there will be a mix of landlines, portable radios, and cellular phones. After the number of devices is established, the unit must determine how much of its own equipment is available. If a unit does not have adequate equipment, it should arrange for support from the customer or another organization. This is often a very satisfactory solution if it is possible. Another solution is the local purchase of hand-held radios. This will probably require a check with the local

communications center to ensure that there are no frequency conflicts as a result of nonstandard communications equipment. However, the unit will often have to operate within its own equipment limitations. In this case, it will be necessary to reevaluate the planned communications network and eliminate some nice-to-have elements.

2-25. One of the best means of communication is the standard military radio that is available in all units. These devices give instant access to all users. However, there are a number of problems associated with these radios, to include the following major problem areas:

- Lack of user adherence to approved radio procedures.
- Potential enemy exploitation of nonsecure communications (such as obtaining intelligence information, deception, radio direction finding, or jamming).
- Lack of batteries and poor equipment maintenance.
- Atmospheric conditions that render the radios inoperative.
- Limited range of single receivers without radio-relay equipment.

2-26. The first two problem areas are directly related, and the solutions are similar. All units have a CEOI that provides frequency and call-sign allocations as well as security measures. Strict adherence to these procedures is mandatory. All personnel and radio/telephone operators (RTOs) must be trained in the proper procedures to ensure the denial of intelligence information to the enemy. This will also help prevent other exploitation procedures that any adversary may employ.

2-27. The lack of batteries and equipment-maintenance problems must be addressed before the equipment is used. Proper maintenance on all equipment can eliminate most problems. The entire communications system should be checked occasionally to ensure that it is functioning as designed. Batteries should be stored in an approved fashion and checked and replaced as needed.

2-28. Atmospheric conditions are a major problem and there are only limited solutions. It may be necessary to establish landline communications. If this is the best solution, a series of communications checkpoints should be developed along travel routes and throughout the AO. This system is often cumbersome, particularly if a move is over great distances or through undeveloped areas. The establishment of radio relays will sometimes overcome these difficulties. In a combat environment, it may be possible to contact the communications officer in the corps and arrange for radio-repeater access.

2-29. After resolving all problems, the only aspect remaining is the use of the equipment that has been selected. Following proper radio procedures (as specified in the CEOI) and communications-security procedures are very important.

MATERIAL SUPPORT

2-30. Specific details on how to procure required materials or material support is generally found in unit SOPs. The intention of this manual is to emphasize the importance of making advance arrangements for these resources. As part of the planning process, an estimate of the time and materials required must be developed. This estimate is based on past

experience with similar projects and the known requirements of the present project. These requirements should be developed without regard to the cost or the difficulty of procurement. Determine what is needed and then figure out how to get it. Normally, most of the material support is the responsibility of the customer. However, this is not always true. Inability of the customer to provide material support should be clearly documented in the reports from information-gathering trips. In particular, the initial site-visitation trip (ISVT) and the administrative-recon trip should result in a specific POC for acquiring necessary materials. The unit should acquire technical supplies through normal supply channels.

SECTION II - INFORMATION-GATHERING TRIPS

2-31. Information-gathering trips are used to gather information on the conduct of the project and for progress evaluation. The information gathered will be logistical, administrative, or technical and is used to refine project plans and milestones. The following paragraphs describe information-gathering trips as they apply to normal prebattle operations. In some instances, these trips can be consolidated or eliminated. The overall need for the various described trips will depend on a number of variables, including—

- The unit's familiarity with the area concerned.
- The amount of information already available concerning the project or the supported unit.
- The anticipated duration of the project.
- The amount of problems encountered by the unit.

INITIAL SITE-VISITATION TRIP

2-32. The ISVT is basically a fact-finding mission that is normally conducted by the survey-section leader and the project party chief. The primary function of this trip is to gather information that will be used to plan the project and to establish POCs for the various support functions.

2-33. All project directives will identify an overall POC. This individual or office is normally concerned with the results of the project and may not be able to provide specific types of assistance that will be required. Often, the overall POC will be able to assist in establishing a POC for administrative and logistics requirements.

2-34. The types of support that must be arranged before any field activity include equipment maintenance; medical and dental care; personnel actions; supply, lodging, mess, and mail services; and personnel. These arrangements must be geared to meet the specific needs of the recon party and to support the general needs of the project-execution party.

2-35. For successful completion of the recon phase, all arrangements with respect to care of personnel and equipment must be made during the ISVT. Careful records should be maintained and memorandums of agreement (MOAs) should be drafted as required. Chapter 11 identifies the documentation required as a result of the ISVT.

ADMINISTRATIVE-RECON TRIP

2-36. The purpose of the administrative-recon trip is to finalize arrangements for the project and to plan the specifics of the fieldwork. Chapter 3 discusses how to conduct a survey recon. During the recon, it is imperative that all arrangements made during the ISVT be checked to ensure that they are correct and viable. There may be a delay between the recon and the project execution that causes some previously established POC to change. If this occurs, a replacement POC must be established. Any unanticipated event that occurs should be carefully documented. Chapter 11 identifies the documentation required as a result of the recon trip.

PROJECT-VISITATION TRIP

2-37. The survey-section leader or a command representative will generally conduct the project-visitation trip, which has a twofold purpose. The first is to check on the progress of the project, which is the responsibility of the survey-section leader. Any recurring technical problems will be discussed at length and resolved in such a manner as to preclude recurrences. If problems have been occurring before a visitation trip, contact with the parent unit should have been made previously. Technical difficulties that need resolution should not be left unresolved until a scheduled project-visitation trip. The second function is to check on the health, the welfare, and the morale of the troops. It is imperative that the commander knows how the troops are doing with respect to the job and as individuals. If numerous technical problems have been occurring, it is possible that some personal problems are being overlooked. The project visitation can often resolve these problems before they become major limiting factors on the project execution. A trip report should be completed and included in the final project folder for historical purposes.

SECTION III - PROJECT EXECUTION

2-38. Project execution is the actual conduct of the project and putting the project plans into effect. Unexpected or unusual circumstances may require plan modifications. If all planning has been done correctly, the survey team should arrive and be able to go straight to work without delays. As problems occur, the POC should be contacted and the problems resolved as expeditiously as possible. Specific details on project execution are covered in the following chapters concerning each survey activity. Chapter 3 identifies the documentation required for all phases of project planning and execution.

Chapter 3

Survey Recon

The recon party must consider special factors, as determined by the objective of the survey, and the methods, techniques, and equipment that will be employed. This chapter discusses general recon considerations. Survey methods and techniques are discussed in the following chapters.

SECTION I - RECON FUNDAMENTALS

RECON REQUIREMENTS

3-1. A proper survey recon includes—

- Gathering all existing survey data about the target area.
- Testing and determining the usability and visibility of existing stations.
- Selecting sites for the main and supplemental stations.
- Determining the monumentation requirements.
- Collecting terrain and climatic information.
- Arranging for access to private or government property.
- Checking on the availability of lodging, mess, medical, maintenance, and other required support.

GPS

3-2. Interreceiver visibility is not required for GPS surveying. Stations can be set according to network-design principles rather than traversing around buildings or mountains. The only requirement for receiving GPS signals is a clear view of the sky. Sources of electro-magnetic interference and tall buildings should be avoided. Choose a station with no obstructions above an inclination of 15° to 20°. Draw a station obstruction diagram to assist in the planning of GPS sessions. Verify the station's accessibility and then draw maps with directions to the stations and mark each station clearly. The field crew will be in a hurry to set up when they arrive, and unmarked stations can waste valuable time.

TRIANGULATION

3-3. During special surveys when the need to locate the position of a point that cannot be occupied arises, triangulation is necessary. This technique places special demands on the recon party. The mathematical computations place stringent requirements on the size and shape of the geometric figures that are used to determine coordinates. For this reason, the location of the

stations will normally be dictated to the field-recon party, based on the results of the office recon. The recon party must ensure that the observation stations which form the baseline are intervisible. A thorough knowledge of triangulation criteria is absolutely necessary.

TRAVERSE

3-4. The demands for a traverse recon are less stringent than for triangulation. Ensure that both the rear and the forward stations are visible from each proposed station. Wherever possible, distances between stations should be uniform. In control surveys that may become part of the US National Control Network, the SSGCN must be satisfied. Spacing between stations will be dependent on the EDME available.

EDME

3-5. An EDME traverse recon requires intervisibility between stations. The minimum and maximum allowable distances are based on the EDME characteristics and the clearance above possible obstructions. Use of infrared EDME will be dependent on the weather.

DIFFERENTIAL LEVELING

3-6. Differential leveling should follow routes containing the least amount of change in elevation between BMs and individual setups. The routes will frequently follow roads with moderate traffic, so care must be taken to ensure the safety of the leveling party.

TRIGONOMETRIC LEVELING

3-7. A trigonometric-leveling recon is accomplished when a traverse recon is performed. When given a choice between a relatively level, a greatly elevated, or a depressed observation, select the relatively level observation. Failure to accurately level the instrument will cause a greater error in an elevated or depressed observation.

OTHER CONTROL METHODS

3-8. Recon for other control methods will vary according to the physical characteristics and limitations of the equipment or system used. No matter what system or equipment is being used, the proposed station must be accessible and the proposed station must be able to be included in the local survey-control scheme. Stations occupied by PADS must not exceed the maximum distance and time from the initializing station.

RECON-PARTY COMPOSITION

3-9. The recon party will vary in disposition and number according to the method of survey, the type of terrain, the available transportation, the extent of the survey, and the density of control required. The chief of the recon party is normally the section leader. The recon party usually consists of two to five personnel. As a minimum, it will include the survey-party chief and the section leader. It is also helpful to include personnel who will be instrument

operators. The most qualified unit members should be assigned to the recon party, because a properly designed recon will result in a survey project that is accurate, complete, and expeditious. The recon party should be thoroughly briefed on the project instructions and the specifications of the survey mission. Recon is accomplished in three phases—office recon, field recon, and recon reports.

SECTION II - RECON PHASES

OFFICE RECON

3-10. The office-recon phase includes the gathering of existing data and a study of applicable maps. This phase will be completed before the start of the field-recon phase.

EXISTING DATA

3-11. During the office-recon phase, the first step is to gather all existing data on the area to be surveyed. Depending on the area, there may be a number of sources that maintain some type of reliable survey data. The existing data will usually consist of trig lists, station description cards, and aerial photographs or maps. Trig lists come in many forms, depending on the publishing agency. A trig list may be compiled on DA Form 1959, horizontal-control data booklets from the National Geodetic Survey (NGS), or a computer printout of coordinates. Sources of information include—

- Local Army units (such as map depots, FA target-acquisition (TA) units, SIC, and survey units).
- The NGS and the US Geologic Survey (USGS).
- USACE district offices.
- The US Department of the Interior, Bureau of Land Management.
- State and local government civil-engineering or survey offices.
- Other nations. Existing data is sometimes received from the national agency charged with the mapping of that nation. Local municipalities and city governments also have survey information in their engineering or land-planning offices.
- Continuously operating reference stations (CORSs) for CONUS.

3-12. Regardless of the information source, all trig lists (officially classified or not) must be safeguarded. Once secured, this information should be maintained as a database for that area since it may be necessary to conduct additional surveys in the same or an adjacent area.

MAPS

3-13. Do not evaluate the existing material until all material has been assembled and the information has been annotated on the available maps or aerial photographs. Plot the required SCPs from the project directive, and then evaluate the usability of existing controls. Compare the required control method with the existing control method to determine if additional, basic control is needed. It is possible that many required stations may be eliminated

because adequate control already exists. For those required stations that must be established, a tentative route of survey is annotated on the maps.

FIELD RECON

3-14. The field-recon phase is different for each survey project. A party chief must consider and apply the lessons learned from previous projects. The methods and techniques can be changed to suit the conditions of the current project. A successful party chief will also employ the knowledge and ingenuity of the survey-party personnel.

INSPECTION

3-15. When time permits, the party chief and one other person will conduct a preliminary field inspection of the area. When gathering information concerning the area to be surveyed, include terrain types, tree heights, road width, road surfaces, spacing between roads, microclimate (fog, haze, and heat waves), and any other factors that will affect distance measuring and intervisibility between proposed stations. The inspection may be conducted using vehicles, helicopters, or airplanes. The results of the inspection will determine the scheme and route for the survey.

RECOVERY AND VERIFICATION OF EXISTING CONTROL STATIONS

3-16. In areas where control is to be extended or established, there may be control stations from earlier surveys that must be recovered and verified. These stations should have been identified and annotated on overlays during the office-recon phase and will serve as starting points for proposed GPS networks, traverse lines, or level lines. The existing stations should be located, described, and verified for accuracy, before using them for extending control.

Existing Control Stations

3-17. Existing control stations (and their establishing surveys) follow similar patterns. Recognizing and associating the patterns with the terrain types will assist the surveyor in locating existing stations.

- Triangulation stations are usually found on the highest point of a hill or a mountain. In areas of little relief, the stations may be located at prominent points or sites where a tower could have been easily erected.
- BMs and traverse stations are typically located along roads, railroads, pipelines, or other transportation routes, which permit intervisibility and accessibility. BMs and traverse stations may also be found along waterways, rivers, canals, and coastlines.

Available Information

3-18. In some areas, urbanization has changed road or drainage patterns. In rural areas, land may have been cleared and cultivated or fields may have become overgrown or reforested. Gather and consider all available information when searching for a station.

3-19. Trig lists, control cards, and control bulletins contain brief descriptions and sketches of stations. The information may be outdated or insufficient for a final product but will permit surveyors to locate the general vicinity of the station. The final steps in locating the station will involve the use of distances and azimuths from the reference marks (RMs) to the station.

3-20. Previous survey data may include survey schemes, overlays, or plots depicting the relative position of the stations in the general area. After one or more stations have been recovered, the other stations may be roughly plotted and located using a magnetic compass and either intersection or resection methods.

3-21. Aerial photographs may be used if the station to be recovered can be identified on the photographs. Using features that are permanent and prominent on both the photograph and the ground will permit surveyors to reach the station site.

3-22. Maps with the plotted coordinates of the station will permit surveyors to identify the route of travel to the station. Maps will also assist surveyors in determining the station's accessibility.

3-23. Local information sources include local surveyors, public-service officials, construction companies, and landowners. Local sources may be the only means of locating a station if the area has dramatically changed since the other sources of information were published.

Station Verification

3-24. Verification of a station must be performed before using the station. Where only one other station is intervisible, a check-distance measurement can be performed using the GPS or a conventional method. Where two or more stations are intervisible, check-angle observations or GPS measurements can be performed. After the measurements and observations have been performed and reduced, they will be compared to the published information. If the results agree within the overall specifications for the survey project, the stations may be used.

SELECTION OF NEW STATION SITES

3-25. New station sites will be selected after all existing stations have been recovered, described, and verified. The new stations will be placed where required to complete the scheme of the survey.

Considerations

3-26. Correct selection of a new station site will save time and expense and will prolong the life of the new station. Consider the following paragraphs when selecting a new station site.

3-27. **Permanency.** Monuments (also referred to as marks or markers) can be permanent or temporary.

- **Permanent monuments.** Permanent monuments are set in a relatively stable material or structure for the purpose of preserving the location of either horizontal or vertical control. Consider another

site if the proposed site may experience disturbance or land development. Since there are a wide variety of possible situations that may be encountered when setting a monument, it is impossible to address them all. The ultimate selection of the site is at the discretion of the monument setter.

- **Temporary markers.** Temporary markers are the same as permanent monuments except that the preservation time required is less. Temporary markers shall consist of a 1- by 2-inch wooden hub (or larger) with adjacent guard stakes, a copper nail and washer, or a temporary spike that is set in relatively stable material.

3-28. **Security.** Foremost on the list of considerations is a monument's susceptibility to damage or destruction. It is necessary to anticipate any construction that might occur in the area. Frequently, marks that are set in asphalt surfaces are paved over periodically. Marks that are set off the edge of the asphalt surface will stand a better chance of survival.

3-29. **Accessibility.** Accessibility of the marks should be evaluated in selecting the site. If the mark cannot be found or conveniently occupied, its worth is questionable. Determine if there are nearby objects that can be used as references. Distances and directions from prominent reference objects are used to locate a mark. These distances and directions are referred to as lines of position (LOPs). The prominent objects are referred to as origins. At least two LOPs are required to describe a point. The closer to perpendicular that the angle at which the LOPs intersect, the more accurate a position can be described.

3-30. **Stability.** All marks are subject to the effects of geologic and soil activity. Vertical-control marks or BMs are particularly vulnerable because this activity results in vertical movements much more than horizontal motion. Selecting advantageous topographic features (such as the crests of hills) will increase soil stability and decrease frost heave and the consistency of the soil will tend to be more firm. Also consider the soil-grain size, and when possible, choose a site with coarse-grained soils. Fined-grained soils (such as clays) are susceptible to high moisture content, which can be affected by frost and erosion.

3-31. **Safety.** If a mark extends below the ground, there is a chance of encountering underground cables or pipes during installation. Evidence of underground utility lines can often be observed at the surface. Waterlines are marked by valve boxes, and in structures newer than 1960, the utilities are likely to be buried. Avoid digging near light poles, phone lines, or electric and gas junction boxes.

3-32. **Visibility.** Select sites that provide maximum visibility above the horizon, plus 15°. Any obstruction above 15° will potentially block satellite signals. The ideal site should have visibility in all directions above 15°; however, in some locations at specific times, an obstruction in one or two directions may not affect the ability to use the site for GPS surveying. Existing BMs should be used as GPS monuments as often as possible. New marks should be located as close as possible to a known vertical control. Maximum effort should be made to locate all GPS-type monuments within 100 feet of easy access to ground transportation.

Station Names

3-33. Names will normally be assigned by the customer (for example, the project name or number followed by the sequence number of that station in the scheme-of-control extension). Names should be an alphanumeric symbol that is stamped on the respective disk marker. The name that appears on the control point for publication purposes should be the same as the name that actually appears on the mark. Old stations that are reestablished will be given the previous name with a numerical suffix added (such as Boulder number 2). In the absence of guidance from the customer—

- Use the name of a nearby geographical feature.
- Use short names (maximum of 25 characters, including spaces).
- Include the name of the agency or unit that set the mark if it is not precast.
- Make sure the station name is spelled correctly on all documents.
- Do not use special characters such as periods, commas, slashes, or equal signs.
- Do not include nondescriptive terms such as spike or nail or personal names.

Landowner Permission

3-34. Permission must be obtained before conducting a survey on any private land. The survey-section sergeant or the party chief, working through the local Judge Advocate General (JAG), will contact and negotiate with landowners for access to prospective station sites. Written permission to enter the land is preferred because it is documented. The local JAG will assist in this matter and will help keep the military out of potential trouble.

3-35. **US.** The recon and survey parties should have a right-of-entry letter to the overall area from their HQ. This letter does not entitle the survey team to access private property or restricted areas without further permission. When the landowner is contacted, a full explanation of the work to be done is given without any attempt to conceal any inconveniences or damage that may arise. Government regulations concerning damage claims should be explained when necessary. In the case of an absentee owner, who cannot be reached in person, a letter explaining the work and asking consent to access the property should be mailed.

3-36. **Other Nations.** When working in other nations, the appropriate officer of the US embassy within that country will generally negotiate the right-of-entry letters for overall areas within that country. However, a right-of-entry letter or approval from the host nation is not always sufficient for access to all public lands within the national boundaries. It is sometimes necessary to contact the local officials where the work is to be performed. Agreements will be conducted according to local customs. Some countries consider an oral agreement, or any statement that could be construed to be an oral agreement, to be contractual and binding. Any transfer of assets (material or otherwise) require close coordination with the JAG.

MONUMENTATION

3-37. The setting of stations should be accomplished during the recon phase. The selection of the monument type is based on local site conditions. The types of marks to be used for vertical and horizontal control are a function of the order and accuracy of the survey, the intended use of the data collected, and the site conditions.

Surface Station Marks

3-38. A variety of standard monuments (described below) are currently available for use as surface station marks. On projects conducted for NIMA or the USACE, standard NIMA or USACE disks should be used. The disks are set in the top of a concrete post or another appropriate monument. Each survey method has individually designated disks. These station marks must be as permanent as possible, intelligently placed for present and future use, and safe from damage. In cultivated fields or in pastures (which may later be cultivated), the owner's permission should be obtained to build rock cairns or to set guard or witness posts around monuments.

Subsurface Station Marks

3-39. Subsurface station marks are used for first-, second-, and third-order stations. Pipe, rebar, and sectional rods are considered subsurface marks and aid in the relocation of disturbed marks. Where bedrock is exposed and a Type C monument is used, no such mark is feasible, and the drill hole itself is sufficient.

Monument Types

3-40. The type of monument used depends on the terrain, the climate, and the soil composition. Engineer manual (EM) 1110-1-1002 identifies specifications for survey markers and monuments. Monuments can be subdivided into two general categories—standard and nonstandard.

3-41. **Standard Monuments.** Standard monuments use some form of standard survey disk. These disks may be brass, bronze, aluminum, or other alloys. *Tables 3-1 and 3-2* suggest the type of monument to be used according to required vertical and horizontal accuracy (USACE standards). A Type G monument is sufficient for all third-order surveys, both vertical and horizontal.

Table 3-1. Site Conditions and Monument Types for Vertical Control

Site Condition	Monument Type		
	Order of Accuracy		
	1	2	3
Rock outcrops and concrete structures	C	C	C
Sand, gravel, till, silt, and clay	A	A	G
Construction fill (disturbed earth)	A	A	A

Table 3-2. Site Conditions and Monument Types for Horizontal Control

Site Condition	Monument Type		
	Order of Accuracy		
	1	2	3
Rock outcrops and concrete structures	C	C	C
Sand, gravel, till, silt, and clay	G	G	G
Construction fill (disturbed earth)	G	G	G

- **Type G monument.** This classic, standard monument is made completely of poured concrete with a disk set in the top of the concrete *(Figure 3-1, page 3-10)*. These procedures and dimensions are for a second- or higher-order monument. A Type G monument is constructed by excavating a hole that is 15 centimeters in diameter and 60 centimeters deep. In areas where the maximum frost depth is greater than 60 centimeters, the hole should be 30 centimeters below the frost depth. The disk should be driven onto a pipe, a rod, or a number 5 rebar that is 120 centimeters long. The pipe, rod, or rebar assembly is then driven into the center of the hole until the top is slightly above the surface. The hole is then filled with concrete, which must not cover the disk. The use of pipe, rod, or rebar is optional. The disk may be pushed directly into the fresh concrete, but a magnet must be placed in the concrete if the bar is omitted.
- **Type C monument.** Sound bedrock is the most desirable location for a BM, as illustrated by *Figure 3-2, page 3-10*. It provides the most stable setting in terms of underground activity and potential disturbances. Always use bedrock when a suitable outcrop exists. Use a star drill to make a hole about 2.5 centimeters wide and 6 centimeters deep to receive the shank of the marker. Fill the hole with epoxy resin and insert the disk, with the resin slightly built up around the edge. When a solid bench or ledge is covered with a few feet of top soil, the subsurface mark should be in the ledge and a concrete monument should be set above it to protrude above the surface.
- **Type A monument.** Use a Type A rod monument *(Figure 3-3, page 3-11)* when sound bedrock or substantially stable structures are not available. The monument provides the extra horizontal stability required for 3D surveys, which makes the monument a suitable GPS mark. Refer to EM 1110-1-1002 for details on installing a Type A monument.

  NOTE: Type A monuments are used in marshes. Type G monuments are used in permafrost areas.

- **Precast monument.** To eliminate the need for mixing and pouring monuments at the site, precast monuments may be used if the project specifications permit. These precast monuments are fabricated at the base station or camp and are constructed with the equivalent dimensions listed for poured concrete. If a subsurface mark is

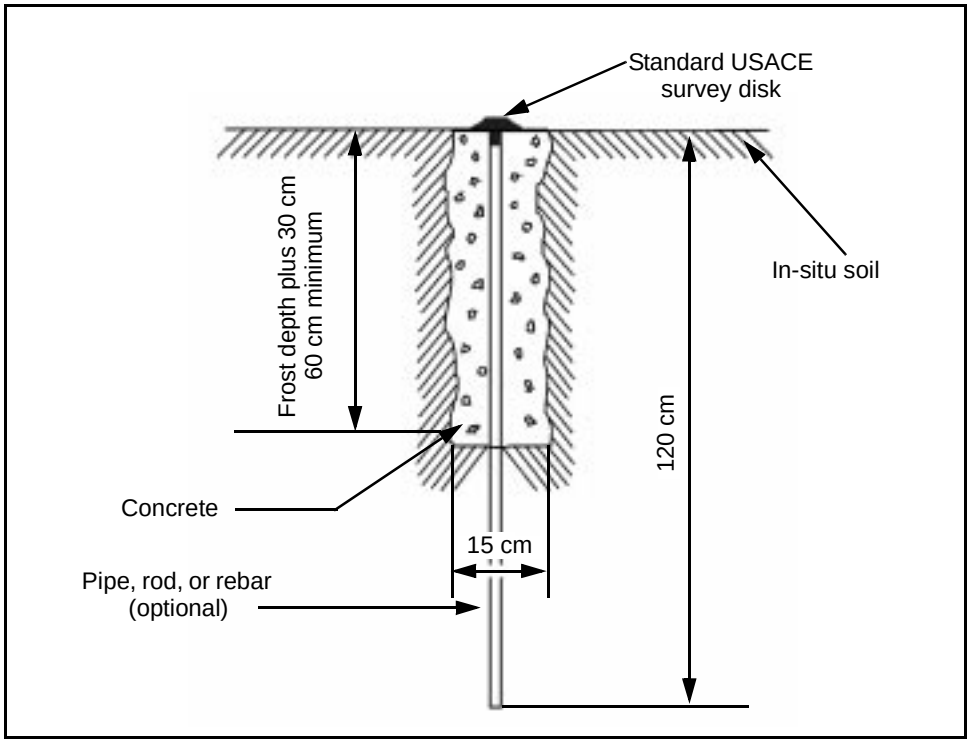

Figure 3-1. Type G Monument

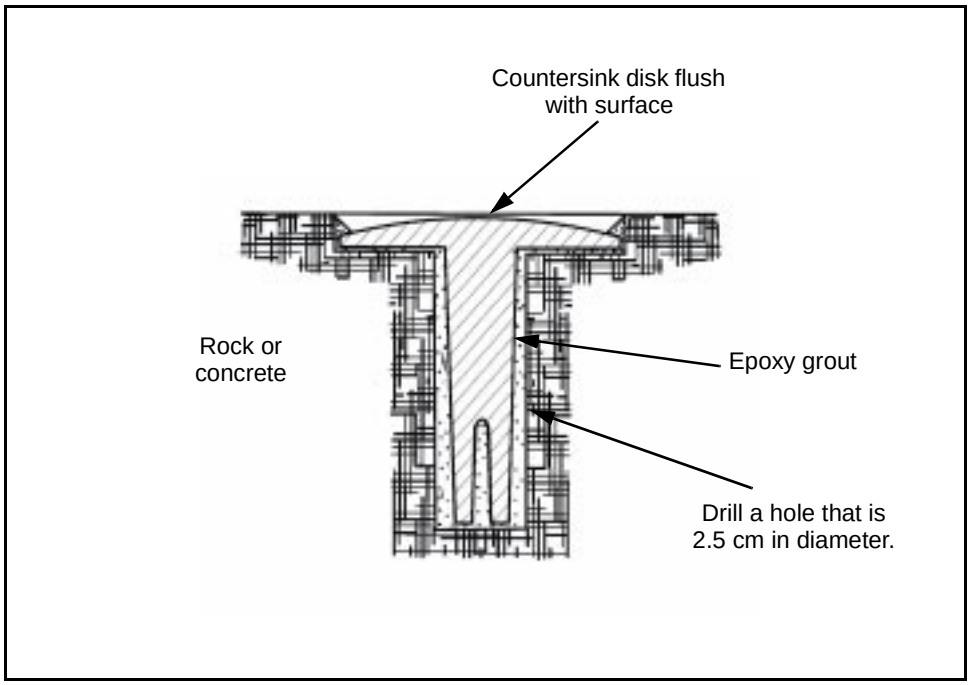

Figure 3-2. Type C Monument

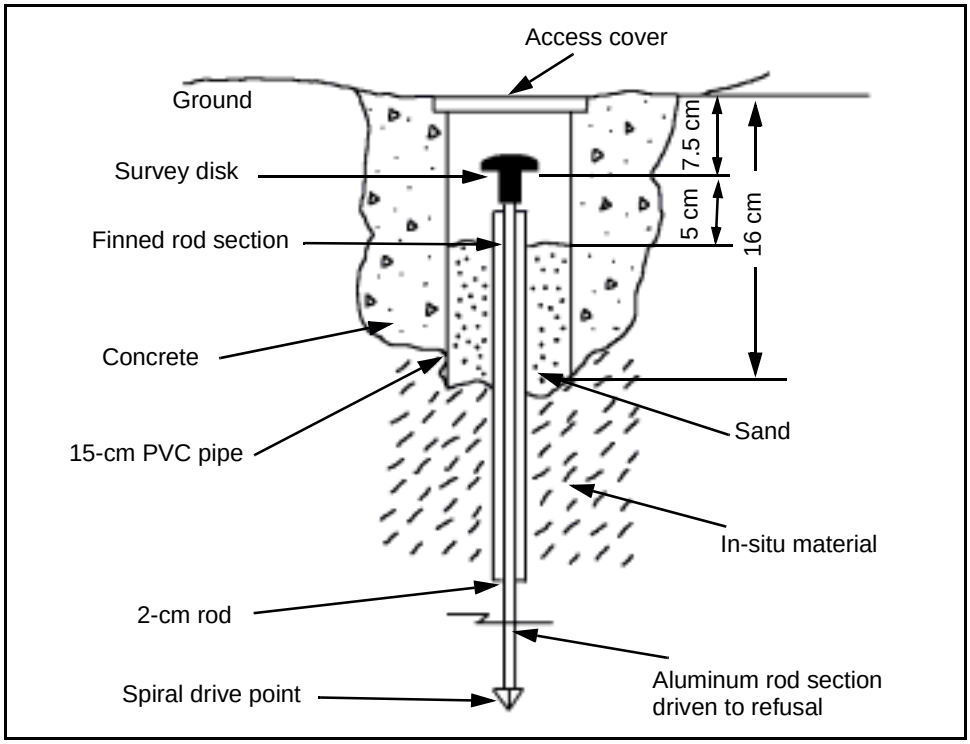

Figure 3-3. Type A Monument

required, it is placed as identified above with a carefully plumbed precast monument.

- **Commercial monuments.** A number of commercial monuments are available that can be considered standard monuments. These are generally metal or plastic rods (with a disk affixed to the top) that are driven into the ground.
- **RMs.** RMs are usually set in the same type of monument as the main station, but they can be made smaller. The number of RMs used depends on the survey method. In triangulation and traverse methods, at least two, but normally three, RMs will be set for each station. These marks should be located within 30 meters of the station and at intervals of about 120° around the station. No subsurface marks are used with these marks. RMs should be located where they are least likely to be disturbed and where direct measurements can be made to them from the station. It is permissible to use drill holes or chiseled marks in rock outcrops.
- **Azimuth marks.** Azimuth marks are established in connection with SCPs to furnish an azimuth that will be available to local surveyors from an ordinary ground-level instrument setup. These marks are used in the extension of control from the station. The readings to azimuth marks are observed as part of the traverse method. Azimuth marks are permanent monuments that are placed in a prominent and safe location and more than 400 meters but less than 3 kilometers from the triangulation station. Prominent, permanent man-made

structures may also be used as azimuth marks (for example, the light on the top of a water or radio-station tower or the cross on a church in a nearby town).

3-42. **Nonstandard Monuments.** These monuments can take many forms and, if properly installed, provide for a good, permanent control station. Some examples are—

- Expended shell casings (7.62 to 105 millimeters) embedded into a concrete post as prepared for standard monuments.
- Sections of rebar or pipe driven into the ground with a concrete collar poured around the upper 0.3 meter.

To aid in the preservation and to serve as a means of easy recovery of monuments, a witness and/or guard post may be established. Witness and guard posts are marked to be readily seen and identified.

- **Witness post.** A witness post is a sign or stake driven into the ground next to the station or RM.
- **Guard post.** A guard post is emplaced around a station that is susceptible to damage from ground traffic. They are generally large wood stock (8 inches by 12 inches by 8 feet) or expended steel (such as sections of railroad rails or heavy pipe). They are usually set 1 to 1.5 meters into the ground and secured with concrete.

STATION DESCRIPTION AND SKETCH

3-43. The recon party will prepare a description and sketch of all newly established permanent and temporary stations and all stations recovered. Stations recovered, but not used, must also have a description completed. The description and sketch will be done on DA Form 1959 *(Figure 3-4)* or in an appropriate field book. The field record is done in free hand using vertical gothic lettering. A final DA Form 1959 should be typed and kept with the official records.

3-44. Provide a narrative report (compiled at the station site) containing all the information necessary to expeditiously locate the station. The description should enable someone totally unfamiliar with the area to go, with certainty, to the immediate vicinity of the station. In conjunction with a sketch, a positive identification of the station and RMs should be possible. Avoid repetition where possible. The description should be brief (to the point), logical, and include the following information.

Recovery Notes

3-45. The authorized recovery notes are as follows:

- **New station.** This is a newly established station for which no description exists.
- **Recovered as described.** This is a station that is recovered exactly as described. All marks are in good condition, the distances and directions are verified, and the sketch and description are adequate. The statement alone is sufficient for the recon recovery card. Transcribe the old sketch and description onto the new control card.

COUNTRY Germany	TYPE OF MARK 170 Monument	STATION Stone Kamp	
LOCALITY Illesheim/L6528	STAMPING ON MARK NA	AGENCY (CAST IN MARKS) NA	ELEVATION 331.671 ~~(FT)~~ (M)
LATITUDE 49°28'10.47467"	LONGITUDE 10°23'10.92519"	DATUM WGS 84	DATUM Amsterdam
(NORTHING) (EASTING) 5,480,852.200 ~~(FT)~~ (M)	(EASTING) (NORTHING) 600,444.268 ~~(FT)~~ (M)	GRID AND ZONE 32U	ESTABLISHED BY (AGENCY) 320th Engineer
(NORTHING) (EASTING) (FT) (M)	(EASTING) (NORTHING) (FT) (M)	GRID AND ZONE	DATE November 96 / ORDER Third

TO OBTAIN GRID AZIMUTH, ADD ° ' " TO THE GEODETIC AZIMUTH

TO OBTAIN GRID AZ. (ADD) (SUB.) ° ' " TO THE GEODETIC AZIMUTH

OBJECT	AZIMUTH OR DIRECTION (GEODETIC)(GRID) (MAGNETIC)	BACK AZIMUTH	GEOD. DISTANCE (METERS) (FEET)	GRID. DISTANCE (METERS) (FEET)
	° ' "	° ' "		

The station is located on Storch Barracks, Illesheim, Germany.

To reach the station front gate of Storch Barracks (Grid 0082) go straight for 0.1 mile to four-way intersection. Turn right (west) and proceed 0.8 mile to the gate of the access road and a guard shack. Follow the access road around the perimeter of the airfield for 0.9 mile to the station site.

The station is a Type 70 monument protruding 20 cm above the ground and is located atop a burm.

The station is located 75.1 m at an azimuth of 160° from Building 6680, 82.3 m from the hot fuel point and 67 m from the fuel point sign.

Horizontal position was established by third-order class I traverse.

Elevation was established by third-order leveling procedures.

SAMPLE

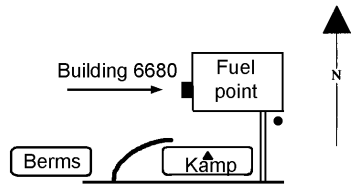

SKETCH

DA FORM 1959, OCT 64 REPLACES DA FORMS 1959 AND 1960, 1 FEB 57, WHICH ARE OBSOLETE.

DESCRIPTION OR RECOVERY OF HORIZONTAL CONTROL STATION

For use of this form, see FM 3-34.331; the proponent agency is TRADOC.

USAPA V1.00

Figure 3-4. Sample of DA Form 1959

- **Recovered.** This is a recovered station with changes that make the old sketch and description inaccurate or inadequate. Complete a new card and make a new sketch and/or description of the station. Report any alterations to the station or RMs and describe the altered marks and new measurements of the referenced distances and directions. An effort should be made to improve all sketches and descriptions.
- **Not recovered.** This is a station for which no positive evidence of existence can be found after a diligent search has been made.
- **Destroyed.** This is a station at which there is positive evidence that the station did exist, but the station and its RMs have been so mutilated that it cannot be replaced within 1 centimeter of its original position. The individual making the recovery and writing the description must use judgment in determining the status of a station. A station may be destroyed for precise purposes but still be valuable for surveys requiring less accurate control (for example, gravimetric, magnetic, or astronomic surveys).
- **Reset.** This is a station at which the monument and/or station marks have been replaced so that the mark is within 1 centimeter of its original position. A station is reset only from subsurface and/or RMs that have not been moved from their original positions. The task of resetting monuments may be assigned to the recon party.
- **Disturbed.** This notation is generally used only with reference to vertical control points. It is a station at which the monument is physically present, but it has been so moved that it has lost its value as a vertical control point within the accuracy to which it was originally established.

General Location

3-46. This information follows the recovery note. It identifies the location of the station area on a map in relation to cities and towns, bridges, and other major landmarks. The political subdivision should also be stated.

Route Description

3-47. This describes the route to the station site. The description should start from an easily located point such as a public building, a park, a main-road intersection, or any other permanent landmark that is identifiable both on the map and on the ground. Distances between checkpoints on the route are given in miles and tenths of miles or kilometers and meters. Changes in route direction are given as both left or right and east (E), west (W), north (N), or south (S).

Station-Site Description

3-48. Describe the exact location of the mark in relation to readily identifiable RMs. List the magnetic azimuth and the distance from the reference point to the station mark.

Station-Mark Description

3-49. Describe the actual mark (for example, drill hole, bronze disk, or chiseled mark in stone) and the exact stamping on the mark (agency, year, and type of station). Note if the station mark is above or below the ground's surface.

RMs

3-50. Describe RMs in the same manner as the station mark. Include the distances and directions measured from the station mark.

Azimuth Mark

3-51. Describe the azimuth mark in the same manner as RMs. The distance is usually approximated rather than measured.

View From Tripod Height

3-52. Describe the field of view from tripod height. For example, the view is unobstructed in all directions except south and the trees (60 feet high, 300 feet from the station) obstruct the view between the magnetic azimuths of 170° and 215°.

Miscellaneous Information

3-53. List any important information about the station site (which is not covered elsewhere) in the notes at the bottom of the description. This may include a photo number and mission (if applicable), danger areas, or access concerns.

Sketch

3-54. The sketch should be clear and simple and contain only enough detail for positive identification of the station. In general, it should contain the—

- **Features of a permanent nature.** Show the features around the station with enough detail so that they will not be confused with other similar features. For example, many road intersections and hilltops look alike. Extend the sketch slightly so that the characteristic features become evident. When there is little detail available, make a rough contour sketch. Use only standard topographic and military symbols on the sketches.
- **Scope and scale.** Judgments on what features are actually required to identify the station and the individual's ability to draw will usually govern the scope of a sketch. Normally, a sketch should include the area within a radius of 200 feet to 1/2 mile. Avoid sketches that cover an area of several miles. In all cases, the termination point of the to-reach site must be on the sketch. The sketch does not need to be drawn to scale.
- **Orientation.** The sketch must be oriented to the north. DA Form 1959 has a preprinted arrow to indicate the direction.

TRANSPORTATION

3-55. The recon party will use transportation that is organic to the unit according to the unit's TOE and SOPs. When available, due to project requirements or customer support, using aircraft will enhance the project recon. Helicopters can greatly assist and speed recon efforts (for example, checking routes of travel and lines of sight between stations, selecting and identifying stations, and determining the scheme for extending surveying control). If aircraft are used, it is mandatory that the pilots be thoroughly briefed on the survey project. Complete knowledge of the entire project by the pilots will expedite the field recon and accelerate the progress of the project.

COMMUNICATION

3-56. The recon party has access to radios, according to the unit's TOE and SOPs. Surveyors use the radios to confirm lines of sight when stations are separated by great distances. Before using the radios on a survey project, the party chief will obtain authorized frequencies from the local (customer's) signal officer. Surveyors will use the radios according to local CEOI and communications-electronics standing instruction (CESI). Surveyors will also follow the unit's standing signal instructions (SSI), signal operation instructions (SOI), and radio-communications procedures. In the event of a conflict, the procedures of the local signal office will take precedence.

LOGISTICS

3-57. The party chief will make arrangements with the customer to ensure that both fuel and maintenance are available for all vehicles. He will also ensure that adequate space is available to secure equipment and to perform project administration and field-office computing.

RECON REPORTS

3-58. Upon completion of the field recon, the party chief will submit a recon report. If the area or the project is large, the project will be divided into phases and a report will be prepared at the completion of each phase. The recon report is discussed in detail in Chapter 11.

Chapter 4

Datums, Grids, and Coordinate References

The discipline of surveying consists of locating points of interest on the surface of the earth. Points of interest are defined by spherical or planar coordinate values that are referenced to a defined mathematical figure. In surveying, the figure may be an equipotential surface, an ellipsoid of revolution, or a plane.

DATUMS

4-1. The earth is an ellipsoid, not a sphere, flattened slightly at the poles and bulging somewhat at the equator. Datums are reference surfaces that consider the curvature of the earth for the mathematical reduction of geodetic and cartographic data.

GEOID

4-2. The geoid is the equipotential surface within or around the earth where the plumb line is perpendicular to each point on the surface. The geoid is considered a MSL surface that is extended continuously through the continents. The geoidal surface is irregular due to mass excesses and deficiencies within the earth. The figure of the earth is considered as a sea-level surface that extends continuously through the continents. The geoid (which is obtained from observed deflections of the vertical) is the reference surface for astronomical observations and geodetic leveling. The geoidal surface is the reference system for orthometric heights.

ELLIPSOID

4-3. The WGS is not referenced to a single datum point. It represents an ellipsoid whose placement, orientation, and dimensions "best fit" the earth's equipotential surface that coincides with the geoid. The system was developed from a worldwide distribution of terrestrial gravity measurements and geodetic satellite observations. Several different ellipsoids have been used in conjunction with the WGS ellipsoid. Several ellipsoids are used in US military mapping. The goal is to eventually refer all positions to the WGS, which has a specific set of defining parameters, or to a WGS-compatible ellipsoid. Ellipsoids may be defined by a combination of algebraically related dimensions such as the semimajor and semiminor axes or the semimajor axis and the flattening. *Figure 4-1, page 4-2,* illustrates the defining parameters of some ellipsoids used by NIMA.

PROJECTIONS

4-4. A map projection is the systematic drawing of lines representing the meridians and parallels (the graticule) on a flat surface. Different projections

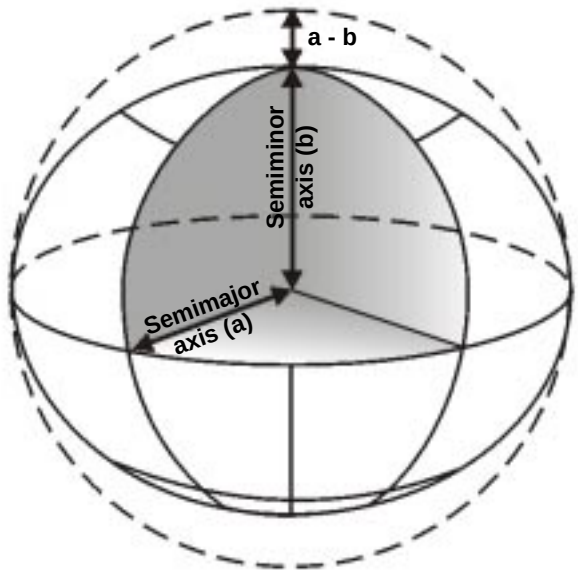

Ellipsoid	a (m)	b (m)	*1/f
Airy	6,377,563.396	6,356,256.910	
Australian national	6,378,160		298.25
Bessel	6,377,397.155		299.1528128
Clarke 1866	6,378,206.4	6,356,583.8	
Clarke 1880	6,378,249.145		293.465
Everest	6,377,276.345		300.8017
Hough	6,378,270		297
International	6,378,388		297
Modified Airy	6,377,340.189		
Modified Everest	6,377,304.063		300.8017
South American 1969	6,378,160		298.25
WGS 72	6,378,135		298.26

*Flattening is the ratio of the difference between the semimajor axis and the semiminor axis of the spheroid and its major axis $\frac{(a-b)}{a}$ and may be stated by the numerical value of the reciprocal of the flattening (1/f).

Figure 4-1. Defining Parameters of Ellipsoids

have unique characteristics and serve differing purposes. Projecting the graticule of the ellipsoid onto a plane depicts the projections. The intersections of the graticule are computed in terms of the ellipsoid.

4-5. US military maps use the sexagesimal system of angular measurement (the division of a full circle into 360°) for designating the values of the graticule. A degree is divided into 60 minutes, and each minute is divided into 60 seconds. Parallels are numbered north and south from 0° at the equator to 90° at the poles. Meridians are numbered east and west from 0° at the prime meridian to a common 180° meridian. The prime meridian used for US military mapping and charting coincides with the Bureau International de I'Heure defined as zero meridian, located near Greenwich, England.

4-6. The projections used as the framework of all US military maps and charts are all conformal. Conformability indicates that small areas retain their true shape; angles closely approximate their true values; and, at any point, the scale is the same in all directions. The following projections, which show military grids, are prescribed for US military topographic mapping and charting:

- Maps at scales larger than 1:500,000 for areas between 80° south and 84° north are based on the Universal Transverse Mercator (UTM) Projection.
- Maps of the polar regions (south of 80° and north of 84°) are based on the Universal Polar Stereographic (UPS) Projection.

These projections are being replaced by the WGS and will be phased out once the maps have been reprinted with the WGS.

4-7. The Mercator projection is not normally used for military topographic maps; however, its description serves as a basis for understanding the transverse Mercator projection. The Mercator projection can be visualized as a spheroid projected onto a cylinder tangent to the equator and parallel to the polar axis *(Figure 4-2, page 4-4)*. When the cylinder is opened and flattened, a distortion appears. The distortion becomes more pronounced as the distance from the equator increases. The Mercator projection is transversed by rotating the cylinder again until the spheroid is parallel to a second axis (the meridian), which is then open and flattened *(Figure 4-3, page 4-5)*. For military purposes and to minimize distortion, the transverse Mercator projection uses 60 longitudinal zones, each 6° wide.

4-8. Most military operations assume that map and ground distances are equivalent. However, in certain geodetic and artillery operations, where long distances are involved and the accuracy of results is essential, it is necessary to correct for the difference between distances on the map and distances on the ground. This is done by using scale factors from prepared tables or formulas. For the transverse Mercator projection, the scale factor is 1.00000 (unity) at the lines between each zone, decreasing inwardly to 0.9996 at the central meridian (CM) and increasing outwardly to about 1.0010 near the zone boundaries at the equator.

GRIDS

4-9. Grids are applied to maps to provide a rectangular system for referencing and making measurements. There is a definite relationship between the grid and the graticule, so that a corresponding geographic position can be determined for each grid position. Military grids consist of parallel lines

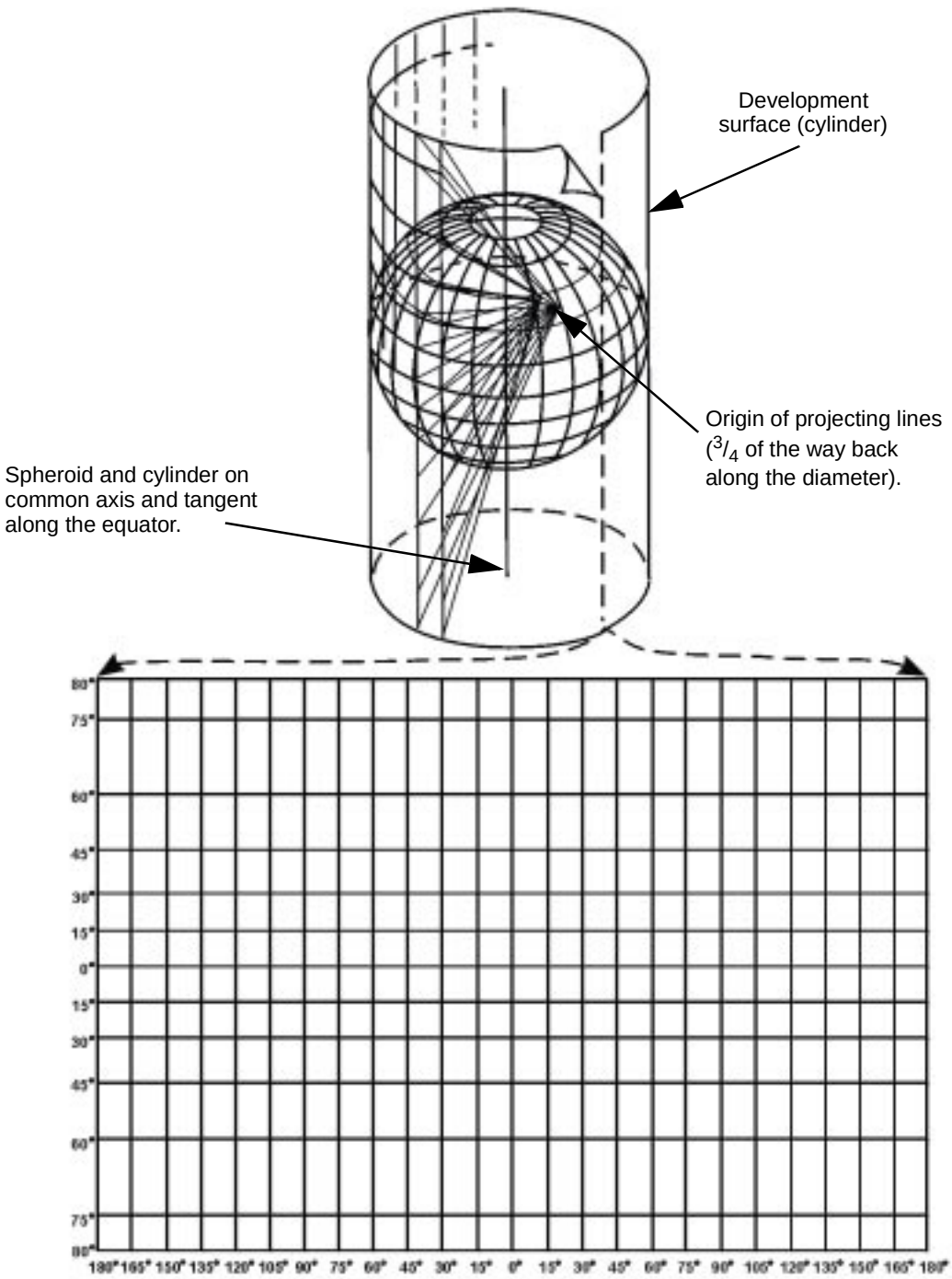

Flattened cylinder with developed projection.

Figure 4-2. Mercator Projection

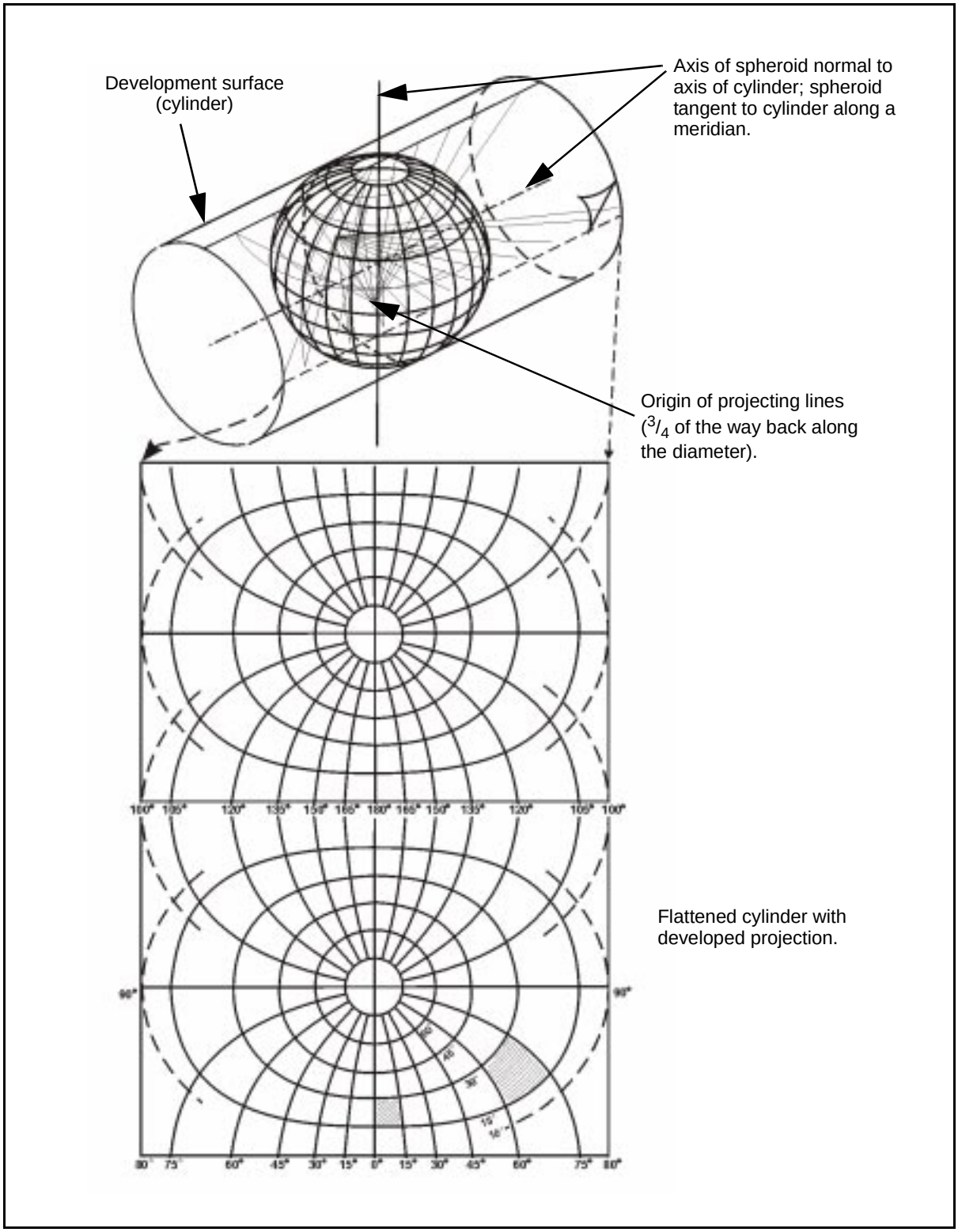

Figure 4-3. Transverse Mercator Projection

intersecting at right angles and forming a regular series of squares. The north-south lines are called eastings and the east-west lines are called northings. Each grid line is one of an even-interval selection of measurement units. The interval is selected according to the map scale. The military prefer to use the UTM grid for areas between 80° south and 84° north.

COORDINATE REFERENCES

4-10. Coordinates may be transformed from one grid system to another (for example, between the Lambert grid and the UTM grid or between different grid zones). The preferred method is to transform the grid coordinates from the first grid system to geographic positions. Then transform the geographic positions to the grid coordinates of the second grid system. This method does not change the datum.

THE US MILITARY GRID-REFERENCE SYSTEM

4-11. The US Military Grid-Reference System (MGRS) is designed for use with UTM grids. For convenience, the earth is generally divided into 6° by 8° geographic areas, each of which is given a unique grid-zone designation. These areas are covered by a pattern of 100,000-meter squares. Two letters (called the 100,000-meter-square letter identification) identify each square. This identification is unique within the area covered by the grid-zone designation.

4-12. The MGRS is an alphanumeric version of a numerical UTM grid coordinate. Thus, for that portion of the world where the UTM grid is specified (80° south to 84° north), the UTM grid-zone number is the first element of a military grid reference. This number sets the zone longitude limits. The next element is a letter that designates a latitude bond. Beginning at 80° south and proceeding northward, 20 bands are lettered C through X. In the UTM portion of the MGRS, the first three characters designate one of the areas within the zone dimensions.

4-13. A reference that is keyed to a gridded map (of any scale) is made by giving the 100,000-meter-square letter identification together with the numerical location. Numerical references within the 100,000-meter square are given to the desired accuracy in terms of the easting and northing grid coordinates for the point.

4-14. The final MGRS position coordinate consists of a group of letters and numbers that include the following elements:

- The grid-zone designation.
- The 100,000-meter-square letter identification.
- The grid coordinates (also referred to as rectangular coordinates) of the numerical portion of the reference, expressed to a desired refinement.

The reference is written as an entity without spaces, parentheses, dashes, or decimal points. Examples are as follows:

- 18S (locating a point within the grid-zone designation).
- 18SUU (locating a point within a 100,000-meter square).
- 18SUU80 (locating a point within a 10,000-meter square).

- 18SUU8401 (locating a point within a 1,000-meter square).
- 18SUU836014 (locating a point within a 100-meter square).

4-15. To satisfy special needs, a reference can be given to a 10-meter square and a 1-meter square. Examples are as follows:

- 8SUU83630143 (locating a point within a 10-meter square).
- 18SUU8362601432 (locating a point within a 1-meter square).

4-16. There is no zone number in the polar regions. A single letter designates the semicircular area and the hemisphere. The letters A, B, Y, and Z are used only in the polar regions, and their presence in an MGRS (with the omission of a zone number) designates that the coordinates are UPS. An effort is being made to reduce the complexity of grid reference systems by standardizing a single, worldwide grid reference system (for example, WGS).

GEOGRAPHIC COORDINATES

4-17. The use of geographic coordinates as a system of reference is accepted worldwide. It is based on the expression of position by latitude (parallels) and longitude (meridians) in terms of arc (degrees, minutes, and seconds) referred to the equator (north and south) and a prime meridian (east and west).

4-18. The degree of accuracy of a geographic reference (GEOREF) is influenced by the map scale and the accuracy requirements for plotting and scaling. Examples of GEOREFs are as follows:

- 40° N 132° E (referenced to degrees of latitude and longitude).
- 40°21′ N 132°14′ (referenced to minutes of latitude and longitude).
- 40°21′12″ N 132°14′18″ E (referenced to seconds of latitude and longitude).
- 40°21′12.4″ N 132°14′17.7″ E (referenced to tenths of seconds of latitude and longitude).
- 40°21′12.45″ N 132°14′17.73″ E (referenced to hundredths of seconds of latitude and longitude).

4-19. US military maps and charts include a graticule (parallels and meridians) for plotting and scaling geographic coordinates. Graticule values are shown in the map margin. On maps and charts at scales of 1:250,000 and larger, the graticule may be indicated in the map interior by lines or ticks at prescribed intervals (for example, scale ticks and interval labeling at the corners of 1:50,000 at 1′ [in degrees, minutes, and seconds] and again every 5′).

THE WORLD GEOREF SYSTEM

4-20. The World GEOREF System is used for position reporting. It is not a military grid and, therefore, does not replace existing military grids. It is an area-designation method used for interservice and interallied position reporting for air-defense and strategic air operations. Positions are expressed in a form that is suitable for reporting and plotting on any map or chart (graduated in latitude and longitude) regardless of the map projection.

4-21. The system divides the surface of the earth into quadrangles, the sides of which are specific arc lengths of longitude and latitude. Each quadrangle is identified by a simple systematic letter code giving positive identification with no risk of ambiguity.

4-22. There are 24 longitudinal zones (each 15° wide) extending eastward from the 180° meridian around the globe through 360° of longitude. These zones are lettered from A to Z inclusive. There are 12 bands of latitude (each 15° high) extending northward from the south pole. These bands are lettered from A to M inclusive, northward from the south pole.

4-23. Each 15° quadrangle is subdivided into 15, 1° zones of longitude eastward from the western meridian of the quadrangle. These 1° units are lettered from A to Q inclusive. Each 15° quadrangle is also subdivided into 15, 1° bands of latitude northward from the southern parallel of the quadrangle. These bands are lettered from A to Q inclusive. Four letters may now identify a 1° quadrangle anywhere on the earth's surface.

4-24. Each 1° quadrangle is divided into 60′ of longitude (numbered eastward from its western meridian) and 60′ of latitude (numbered northward from its southern parallel). This direction of numbering is used wherever the 1° quadrangle is located. It does not vary, even though the location may be west of the prime meridian or south of the equator. A unique reference for defining the position of a point to an accuracy of 1′ in latitude and longitude (for example, 2 kilometers or less) is given by quoting four letters and four numerals. The four letters identify the 1° quadrangle. The first two numerals are the number of minutes of longitude. The last two numerals are the number of minutes of latitude. If the number of minutes is less than 10, the first numeral will be a zero (for example, 04).

4-25. Each of the 1° quadrangles may be further divided into decimal parts (tenths or hundreths) eastward and northward. Thus, four letters and six numerals will define a location to 0.1′ and four letters and eight numerals will define a location to 0.01′.

GPS REFERENCE SYSTEMS

4-26. To fully understand GPS and the positional information, it is important to understand the reference system on which it is based. GPS satellites are referenced to the WGS-84 ellipsoid. The absolute positions that are obtained directly from the GPS measurements are based on the 3D, earth-centered WGS-84 ellipsoid. Coordinate outputs are on a Cartesian system (X, Y, and Z) relative to an earth-centered, earth-fixed (ECEF) rectangular coordinate system having the same origin as the WGS-84 ellipsoid (geocentric). WGS-84 Cartesian coordinates are then converted into WGS-84 ellipsoid coordinates (latitude, longitude, and height). The GPS uses the WGS-84 ellipsoid for geodetic survey purposes. The GPS routinely provides differential positional results on the order of 1 part per million (ppm), compared to the accepted results of 1:300,000 for NAD 83 and approximately 1:100,000 for NAD 27.

HORIZONTAL-POSITIONING DATUMS

4-27. One application of DGPS surveying is densifying project control. Densification is usually done relative to an existing datum (NAD 27, NAD 83,

or local). Even though GPS measurements are made relative to the WGS-84 ellipsoid coordinate system, coordinate differences (such as baseline vectors) on this system can be used directly on any user datum. Minor variations between these datums will be minimal when GPS data are adjusted to fit between local datum stations. Such assumptions may not be valid when high-order National Geodetic Reference System (NGRS) network densification is being performed.

NOTE: NIMA provides datum transformation parameters to many more datums (including local).

NAD 27

4-28. NAD 27 is a horizontal datum based on a comprehensive adjustment of the US National Control Network of traverse and triangulation stations. NAD 27 is a best fit for CONUS. The relative precision between initial-point monuments of NAD 27 is by definition 1:100,000, but coordinates on any given monument in the network contain errors of varying degrees. As a result, relative accuracy between points on NAD 27 may be far less than 1:100,000.

NAD 83

4-29. NAD 83 uses many more station observations than NAD 27 to readjust the US National Control Network. NAD 83 has an average precision of 1:300,000. NAD 83 is based on the Geodetic Reference System (GRS) of 1980 (GRS-80), earth-centered reference ellipsoid and, for most practical purposes, is equivalent to WGS 84.

High-Accuracy Reference Networks Survey Datum

4-30. The nationwide horizontal reference network was redefined in 1983 and readjusted in 1986 by the NGS. Since that time, several states and the NGS have begun developing high-accuracy reference networks (HARNs) for surveying, mapping, and related spatial-database projects. These networks (developed exclusively with a GPS) are accurate to 1 part in 1,000,000.

ORTHOMETRIC ELEVATIONS

4-31. Orthometric elevations correspond to the earth's irregular geoidal surface and are based on tidal fluctuations of the MSL at a specific location. Measured DEs, based on spirit leveling, are generally relative to geoidal heights. The DEs between two points are called orthometric differences. Orthometric heights for CONUS are generally referenced to NGVD 29 or NAVD 88.

WGS-84 ELLIPSOID HEIGHTS

4-32. GPS-determined heights are referenced to an idealized mathematical ellipsoid. This WGS-84 ellipsoid differs significantly from the geoid; thus, GPS heights are not the same as orthometric heights. Due to significant variations in the geoid (even over small distances), elevations cannot be directly equated to orthometric differences. For small project areas where the geoid remains fairly constant, the relationship between orthometric and ellipsoid heights can be obtained from computer modeling or local geoid modeling. Local geoid

modeling requires connecting to a sufficient number of existing orthometric BMs from which the elevations of known points can be best fit by adjustment.

COORDINATE CONVERSION

4-33. Numerous mathematical techniques have been developed to convert coordinates between NAD 83 and NAD 27. These techniques include a variety of multiple-parameter and multiple-regression transformation equations. Each technique has advantages and disadvantages in terms of accuracy, consistency, and complexity. To eliminate these inconsistencies, the USACE Topographic Engineering Center (TEC) configured a comprehensive coordinate-conversion software program called Corps Conversion (Corpscon). Corpscon is the standard for topographic survey conversions, but newer programs are available. Additional technical information and authorized software programs can be obtained from TEC or NIMA web sites.

Chapter 5

Conventional Survey-Data Collection

Theodolites and transits are instruments designed to measure horizontal and vertical angles. As optical instruments progressed, the development of optics allowed the telescope to become shortened to the point that the optics could be rotated 360° horizontally. This act of turning the telescope has sped up work and permitted the qualitative review of sighting and instrument errors.

SECTION I - FUNDAMENTALS

5-1. Surveys are usually performed to collect data that can be drawn to scale and plotted on a plan or map or to lay out dimensions shown on a design. Measurements for both types of surveys must be referenced to a common base for X, Y, and Z dimensions. The establishment of a base for horizontal and vertical measurements is known as a control survey. Conventional control surveys use two fundamental measurements—angle determination and distance measurement.

ANGLE DETERMINATION

5-2. Horizontal angles are usually turned (or deflected) to the right or left. The three types of angle measurements are as follows:

- **Interior angles.** If angles in a closed figure are to be measured, the interior angles are normally read. When all interior angles have been recorded, the accuracy of the work can be determined by comparing the sum of the abstracted angles with the computed value for the closed loop *(Figure 5-1, page 5-2)*.
- **Deflection angles.** In an open traverse *(Figure 5-2, page 5-2)*, the deflection angles are measured from the prolongation of the backsight line to the foresight line. The angles are measured either to the left or to the right. The direction must be shown along with the numerical value.
- **Vertical angles.** Vertical angles can be referenced to a horizontal or vertical line *(Figure 5-3, page 5-3)*. Optical-micrometer theodolites measure vertical angles from the zenith (90° or 270° indicate a horizontal line). Zenith and nadir are terms describing points on a sphere. The zenith point is directly above the observer, and the nadir point is directly below the observer. The observer, the zenith, and the nadir are on the same vertical line.

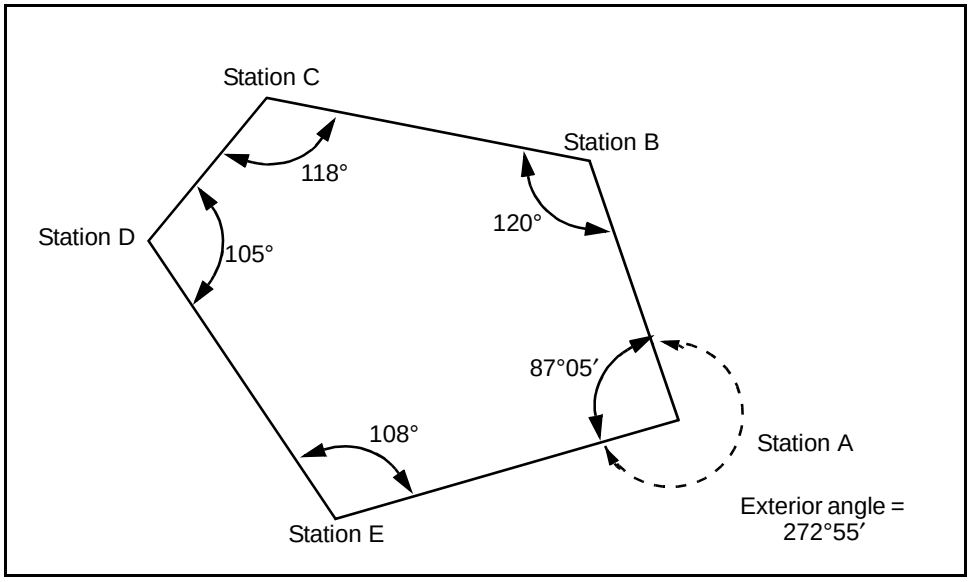

Figure 5-1. Interior Angles on a Closed Traverse

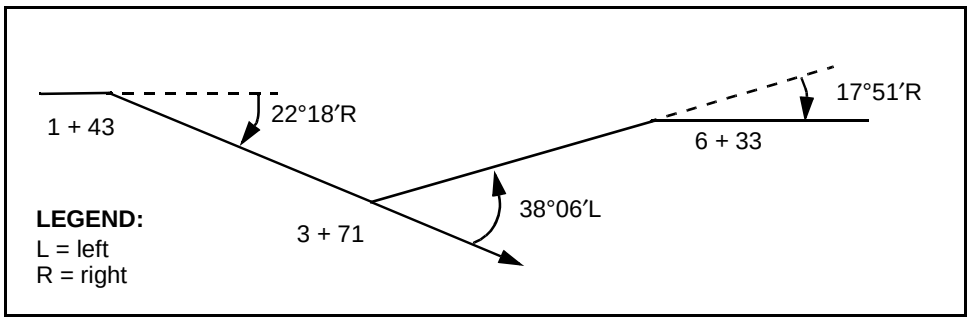

Figure 5-2. Deflection Angles Shown on an Open Traverse

OPTICAL THEODOLITES

5-3. It is difficult to precisely set the angle values on the plates of an optical theodolite. Angles are determined by reading the initial and the final directions and then determining the angular difference between the two directions. Optical theodolites are generally very precise. The optical theodolite used by Army topographic surveyors *(Figure 5-4, page 5-4)* reads directly to 1″ and by estimation to 0.1″. *Figure 5-4* shows that the micrometer was turned to read an even 10″. This is done by moving the grid lines into coincidence, and then the micrometer scale reading (02′44″) is added to the circle reading (94°10′) to give the resulting angle of 94°12′44″. If several sightings are required for precision purposes, distribute the initial settings around the plate circle to minimize the effect of circle-graduation distortions. *Table 5-1, pages 5-5 and 5-6*, illustrates the circle settings for 2 through 16 positions for a 1″ theodolite.

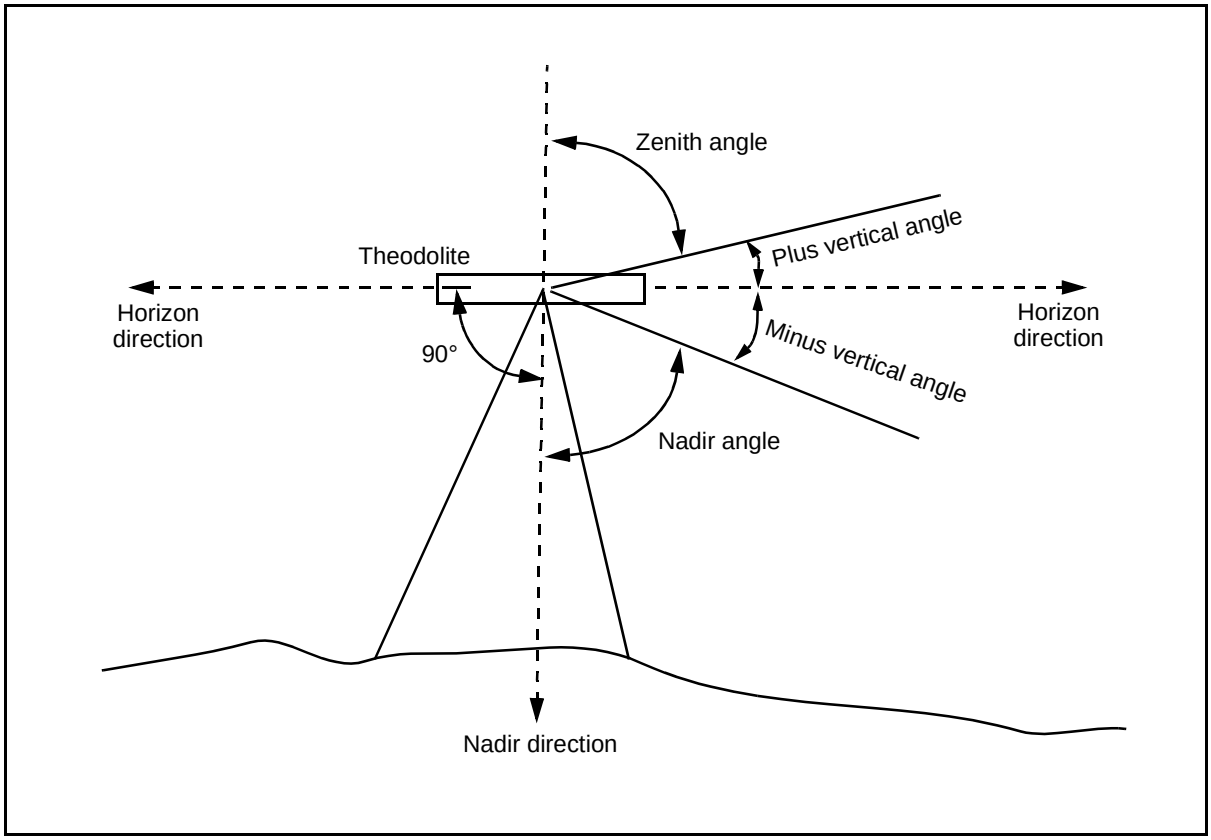

Figure 5-3. Reference Directions for Vertical Angles (Horizontal, Zenith, and Nadir)

OBSERVATION PRECAUTIONS

5-4. Because of the high-accuracy requirements for second- and third-order observations, constant precautions are necessary to counteract all error sources. The party chief should periodically inspect the performance of all observing parties. A good observer achieves the full potential of the instrument at all times. Signals and targets should be precisely bisected. Very little spread (three or fewer of the smallest increments marked on the micrometer) between the direct and reverse measurements should be consistently obtained. Proficiency can be attained only by a careful study of all factors affecting the accuracy of theodolite observations. Efforts should be made to eliminate all known error sources. Observation precautions are summarized as follows:

- **Instrument check.** Check the instruments and targets for stability. If an instrument is not stable, all other refinements are useless.
- **Instrument adjustment.** Pay careful attention to the parallax and the inclination of the horizontal circle plate. Errors introduced by the parallax and the inclination cannot be eliminated.
- **Signal and target centering.** Plumb signals and targets directly over the SCP. Carefully aim signals and targets towards the observing station.

5-5. Do not disturb the instrument while observing a position by releveling or striking the instrument or its support. Avoid any lateral thrust to a clamp, a

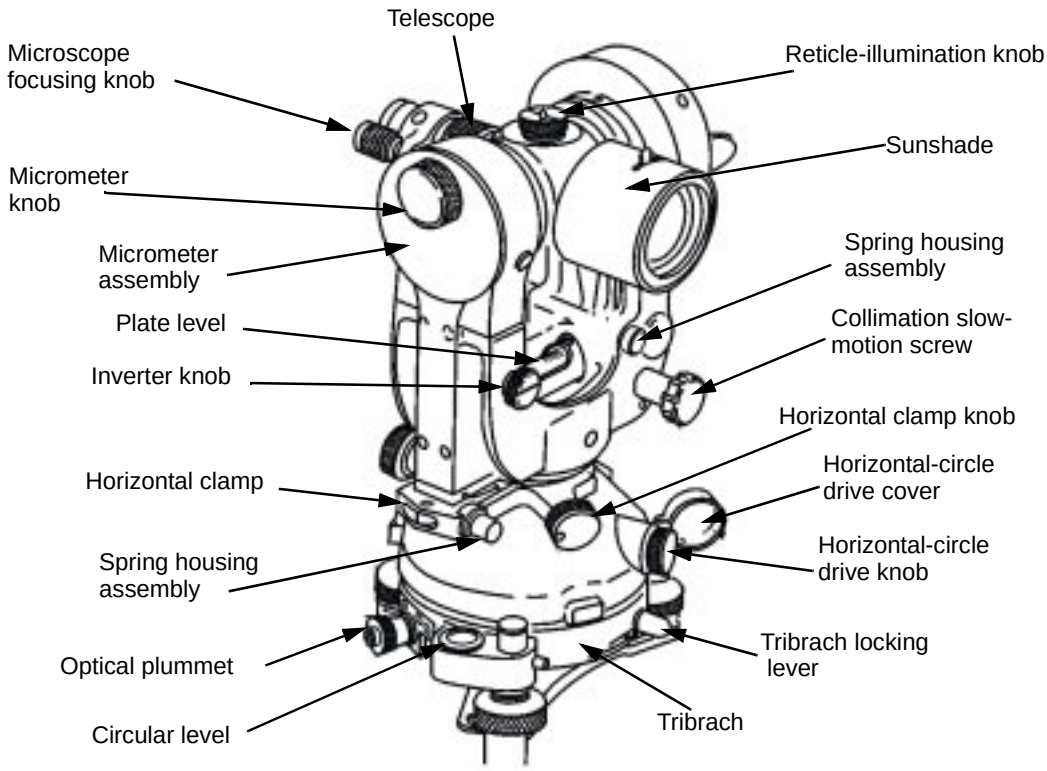

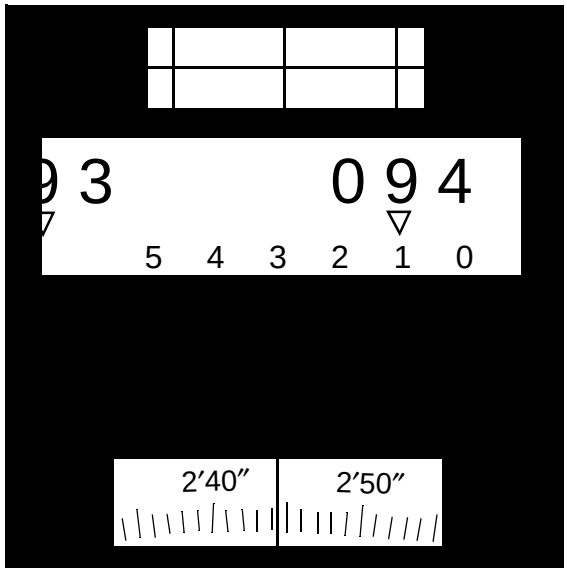

Vertical angle = 94°12′44″

Figure 5-4. Optical Theodolite

Table 5-1. Circle Settings for a 1″ Theodolite

Number	5′ Micrometer Drum			10′ Micrometer Drum			Circle Wild T-3 Micrometer		
Two									
1	NA	NA	NA	0°	00′	10″	NA	NA	NA
2	NA	NA	NA	90°	05′	40″	NA	NA	NA
Four									
1	0°	00′	40″	0°	00′	10″	0°	00′	15″
2	45°	01′	50″	45°	02′	40″	45°	02′	45″
3	90°	03′	10″	90°	05′	10″	90°	04′	15″
4	135°	04′	20″	135°	07′	40″	135°	20′	45″
Six									
1	0°	00′	10″	0°	00′	10″	0°	00′	15″
2	30°	01′	50″	30°	01′	50″	30°	02′	35″
3	60°	03′	30″	60°	03′	30″	60°	00′	50″
4	90°	00′	10″	90°	05′	10″	90°	04′	15″
5	120°	01′	50″	120°	06′	50″	120°	00′	35″
6	150°	03′	30″	150°	08′	30″	150°	20′	50″
Eight									
1	0°	00′	40″	0°	00′	10″	0°	00′	10″
2	22°	01′	50″	22°	01′	25″	22°	00′	25″
3	45°	03′	10″	45°	02′	40″	45°	02′	35″
4	67°	04′	20″	67°	03′	55″	67°	00′	50″
5	90°	00′	40″	90°	05′	10″	90°	04′	10″
6	112°	01′	50″	112°	06′	25″	112°	00′	25″
7	135°	03′	10″	135°	07′	40″	135°	20′	35″
8	157°	04′	20″	157°	08′	55″	157°	00′	50″
Twelve									
1	0°	00′	40″	0°	00′	10″	0°	00′	10″
2	15°	01′	50″	15°	01′	50″	15°	00′	25″
3	30°	03′	10″	30°	03′	30″	30°	02′	35″
4	45°	04′	20″	45°	05′	10″	45°	00′	50″
5	60°	00′	40″	60°	06′	50″	60°	00′	10″
6	75°	01′	50″	75°	08′	30″	75°	00′	25″
7	90°	03′	10″	90°	00′	10″	90°	04′	35″
8	105°	04′	20″	105°	01′	50″	105°	00′	50″
9	120°	00′	40″	120°	03′	30″	120°	00′	10″
10	135°	01′	50″	135°	05′	10″	135°	00′	25″
11	150°	03′	10″	150°	06′	50″	150°	20′	35″
12	165°	04′	20″	165°	08′	30″	165°	00′	50″
Sixteen									
1	0°	00′	40″	0°	00′	10″	0°	00′	10″
2	11°	01′	50″	11°	01′	25″	11°	00′	25″
3	22°	03′	10″	22°	02′	40″	22°	00′	35″
4	33°	04′	20″	33°	03′	55″	33°	00′	50″
5	45°	00′	40″	45°	05′	10″	45°	02′	10″
6	56°	01′	50″	56°	06′	25″	56°	00′	25″
7	67°	03′	10″	67°	07′	40″	67°	00′	35″
8	78°	04′	20″	78°	08′	55″	78°	00′	50″

Table 5-1. Circle Settings for a 1″ Theodolite (continued)

Number	5′ Micrometer Drum			10′ Micrometer Drum			Circle Wild T-3 Micrometer		
9	90°	00′	40″	90°	00′	10″	90°	04′	10″
10	101°	01′	50″	101°	01′	25″	101°	00′	25″
11	112°	03′	10″	112°	02′	40″	112°	00′	35″
12	123°	04′	20″	123°	03′	55″	123°	00′	50″
13	135°	00′	40″	135°	05′	10″	135°	02′	10″
14	146°	01′	50″	146°	06′	25″	146°	00′	25″
15	157°	03′	10″	157°	07′	40″	157°	00′	35″
16	168°	04′	20″	168°	08′	55″	168°	00′	50″

tangent screw, or the electric switch. Other operational precautions for accurate observations are as follows:

- Repoint on the initial target after each circle setting.
- Check the plate level frequently.
- Protect the instrument from wind, sunshine, and precipitation.

5-6. When all other known precautions have been taken, one of the principal causes of error is horizontal refraction. Sometimes elevating the signal will reduce the effects of horizontal refraction, but often the only solution without altering the traverse is to reobserve the target under different atmospheric conditions.

HORIZONTAL-DIRECTION RECORDINGS

5-7. Procedures for recording horizontal directions are the same for all orders of accuracy. Record horizontal directions on a DA Form 4253 *(Figure 5-5)* or any authorized single-sheet recording forms. When operating the AISI, use the appropriate recording media. In all cases, documentation should be completed in the field. Each time an SCP is occupied, the following information should be recorded:

- Instrument make, model, and serial number.
- Instrument operator's name.
- Recorder's name.
- Weather description.
  - Temperature.
  - General atmospheric condition.
  - Wind.
- Designation of the occupied station.
  - Full station name.
  - Year established.
  - Name of the agency on the disk.

5-8. The recording form should include the above information for each station observed. If an instrument, signal, or target is set eccentric to a station (not plumbed directly over the station mark), that item will be sketched on the recording form. The sketch should include the distance and the directions that the eccentric item is from the station. When intersection stations are observed, the exact part of the point observed must be recorded and shown on the sketch.

STATION LEWIS (30TH ENGR BN) 68 DATE 2 JUNE 19 88

INSTRUMENTMAN SFC J. DOE INSTRUMENT WILD T-2 # 1012

RECORDER SFC K. SMOE WEATHER COOL, CLEAR + CALM

POS. REP.	OBJECT OBSERVED	CHRON TIME H	CHRON TIME M	CHRON TIME S	STOP WATCH	TEL D/R	CIRCLE	CIRCLE	MICRO. / VERN. 1ST / A(')	MICRO. / VERN. 2D / B(")	MEAN	MEAN D / R	DIR / ANG	REMARKS	LEVELS W	LEVELS E
1	KING 30TH ENGR BN					D	00	00	52							
	68					R	180	00	58		55.0		00.0			
	ET-1 USC + GS 68					D	325	10	31					STA ✗		
						R	145	10	35		33.0		38.0	325° 09' 38".0		
2	KING 30TH ENGR BN					R	210	02	32							
	68					D	30	02	28		30.0		00.0			
	ET-1 USC + GS 68					R	175	12	12					STA ✗		
						D	355	[illegible]	07		09.5		34.5	325° 09' 39".5		
													MN STA ✗ 325° 09 38.8			
1	ET-1 USC + GS 68					D	00	00	48							
						R	180	00	53		50.5		00.0			
	KING 30TH ENGR BN					D	34	51	[illegible]							
	68					R	214	51	19		17.0		26.5	EXP ✗ 34° 50' 26".5		
2	ET-1 USC + GS 68					R	210	02	27							
						D	30	02	26		26.5		00.0			
	KING 30TH ENGR BN					R	244	52	56							
	68					D	64	52	48		52.0		25.5	EXP ✗ 34° 50' 25".5		
													MN EXP ✗ 34° 50' 26".0			
													MN STA ✗ 325° 09' 38.8			
													HC	360 00 04.8		
													CORR	-04.8 -2.4 + -2.4		
										JCO		CORR	STA ✗	325° 09' 36.4		

DA FORM 1 JUN 74 4253 (Blue)

SAMPLE

Figure 5-5. Horizontal-Direction Recordings

5-9. Numbers and letters should be approximately half the height between lines. The recording should be centered in the block and on the bottom line of the block. All figures must be neat and legible. There should be no erasures or obscuring of the original figures. Original numbers may be crossed out by using a single diagonal line through the numbers. The corrected numbers should be written above the original entry. The person making the correction will initial above and to the right of the original entry and within the block and will explain the reason for the correction in the remarks column. No position will be voided or rejected on any recording media, except in the case of bumping the instrument or stand, which causes the instrument to become unleveled. If the instrument is observed to be unleveled, make a note on the recording media in the remarks column stating that the instrument was not leveled and why. All recordings will be done with black ink. Directions will be entered in the remarks column (in degrees, minutes, and seconds).

5-10. The observer will check every computation on each page or sheet. The observer will verify the computation with a light, visible tick mark to the upper right of the computed numbers or will correct the numbers as described above. The observer will confirm that all computed numbers on the page have been checked by initialing at the bottom right corner of the page.

5-11. If a recording book is used, make an index (on the appropriate page) of the stations from which observations were made and recorded. An index is also required for all other recording media, indicating where to locate observations from any occupied SCP.

HORIZONTAL-DIRECTION ABSTRACTS

5-12. Second-order horizontal-observation specifications require that an abstract of horizontal directions be compiled for every station at which horizontal directions have been observed. DA Form 1916 *(Figure 5-6)* will be completed before leaving the SCP. Third-order horizontal observations require that the horizon closure, the corrected station angle, and the corrected explement angle be recorded before leaving the SCP. Readings will be entered opposite the proper circle position, as indicated in the field notes. The degrees and minutes for each direction are entered one time at the top of each column, and the seconds are entered for each circle position.

5-13. Record all observed positions on the DA Form 1916. If two or more observations have been made for the same target, list all the observations in the same box and determine the mean for that position.

5-14. Examine the listed positions. For any position that appears to vary greatly from the apparent mean of all the positions, check the computations in the field-recording book or other recording media. Be alert for a change in the minutes of the computed directions (angles) in the field data. Reject any positions that vary widely from the mean and then reobserve the positions. Enclose any values that are rejected by observation in parentheses and follow with “Ro.”

5-15. Compute the mean of the observed positions. Round the mean value of a direction to the nearest 0.1″ if a 1″ instrument was used for observation. Reject all observations that differ from the mean by more than the rejection limit. Enclose any rejected observations in parentheses and follow with “R1.”

ABSTRACT OF HORIZONTAL DIRECTIONS

For use of this form, see TM 5-237; the proponent agency is TRADOC.

LOCATION	ORGANIZATION	STATION
Missouri	99th Eng Det (Survey)	LAKE (USC&GS) 1932
OBSERVER	**DATE**	**INST. (TYPE) (NO.)**
SGT Smith	2 April 1989	Wild T-2 # 28234

POSITION NO.	STATIONS OBSERVED							
	BROOK (USACE) 1956	BASS (DMA) 1972		EXPLEMENTARY ANGLE				
	(Initial) 0° 00′	° ′ 047 46	° ′	° ′ 312 13	° ′	° ′	° ′	° ′
1	″ 0.00	″ 21.5	″	″ 38.3	″	″	″	″
2	0.00	22.0		38.1				
3	0.00	22.0		37.8				
4	0.00	21.0		38.3				
5	0.00	21.5		38.4				
6	0.00	22.5 (36.0)R_0		38.0				
7	0.00	21.0		38.1				
8	0.00	21.5		3[illegible]				
9	0.00	22.0		38.1		Mn Sta	047 46	21.7
10	0.00	21.5		38.2		EXPLEMENTARY	312 13	38.1
11	0.00	22.0		37.9				
12	0.00	21.5		38.2		Closure	359 59	59.8
13	0.00					Error		-0.2
14	0.00							
15	0.00						Corrected	
16	0.00					Mn Sta	047 46	21.8
Sum,		260.0		457.6		EXPLEMENTARY	312 12	38.2
Mean,		21.7		38.1				

COMPUTED BY	DATE	CHECKED BY	DATE
SPC Jones	2 April 1989	SSG J. Zambrano	2 April 1989

DA FORM 1916, FEB 57 USAPPC V1.00

SAMPLE

Figure 5-6. Abstracting Horizontal Directions

R1 indicates that the value was rejected using the first mean value. The rejection limit will be applied to each observation with the same amount of accuracy as when the mean was determined.

5-16. Reobserve any rejected positions and determine a new mean. Reapply the rejection limit. Enclose any positions still exceeding the rejection limit in parentheses and follow with “R2.” R2 indicates that the value was rejected using the second mean value. Ensure that sufficient acceptable positions remain.

5-17. Do not reject any reading if it is within the rejection limits, unless it was rejected at the time of observation. If a value was rejected at the time of observation, check the field notes for the observer's reason for rejection. Once a value is rejected, it cannot be used again.

5-18. Do not use the mean of the readings if one of two or more readings on a position is outside the rejection limits. Use only the reading that is within the rejection limits. If two readings are outside the rejection limits (one is high, the other is low, and the mean is within the limits), the readings must be rejected. If there is a progressive change in the values of the positions of a direction or if the mean of the first half of the positions differs appreciably from the mean of the last half of the positions, attempt to observe another complete set of positions before leaving the SCP.

VERTICAL-OBSERVATION RECORDINGS

5-19. Recording vertical observations (zenith distances [ZDs]) is the same for all orders of accuracy. Vertical observations are recorded on DA Form 5817-R *(Figure 5-7)*, an authorized single-sheet recording form, or appropriate media when operating the AISI. In all cases, complete documentation will be performed in the field. In addition to the recording requirements, record the following information:

- The HI above the station (recorded to the nearest 0.01 meter).
- A sketch of the observed target (that shows the point observed on the target) at the bottom of the object-observed column.
- The height of the observed target (HT) above the station being observed (recorded to the nearest 0.01 meter).
- A sketch showing any target's adjoining stations. This sketch will be drawn in the bottom of the remarks column. All possible points that may be observed will be measured and recorded to the nearest 0.01 meter.

5-20. During vertical observations, the time of the first observation of the first position and the time of the last observation of the last position are recorded. The times are recorded to the nearest whole minute.

VERTICAL-OBSERVATION ABSTRACTS

5-21. Vertical observations are abstracted onto DA Form 1943 *(Figure 5-8, page 5-12)* at the station site by the observing party. Targets or signals shown to other stations are sketched and dimensioned at the bottom of the form. If a target or signal is changed during the day, the time of the change and the new dimensions are also entered.

5-22. Vertical observations recorded as vertical angles are converted to ZDs before abstracting. The ZDs are abstracted, including the times of the observations. The abstracted ZDs are meaned and reduced to corrected ZDs by applying the reduction to line-joining stations. The following formula is used to determine the reduction in seconds:

$$\textit{Reduction in seconds} = \frac{(HI - HT)\sin \textit{mean ZD}}{s \sin 1''}$$

where—

s = slope distance between stations (in kilometers)

Zenith Distance/Vertical Angle

For use of this form, see FM 3-34.331; the proponent agency is TRADOC

STATION Lewis (USC&GS) 29 DATE PM 14 Oct 19 68

INSTRUMENTMAN SFC J. Doe INSTRUMENT Wild T2 #52119

RECORDER SPC W. Roe WEATHER Breezy cool calm

OBJECT OBSERVED	CHRON TIME			STOP WATCH	TEL D/R	CIRCLE		MICRO		MEAN	ZEN DIST	REMARKS	LEVELS	
	H	M	S					1ST	2D				W	E
1. Lewis (USC&GS) 29	14	25			D	90	04	51	-03.5	=47.5		HT = 1.60m		
					R	269	55	16	-03.5	=12.5		HT = 1.54m		
					Σ	359	59	67	-07.0	=60.0	90°04'47.5"			
2.	14	30						52	-0.35	=48.5				
								15	-0.35	=11.5				
								67	-07.0	=60.0	90°04'48.5"			

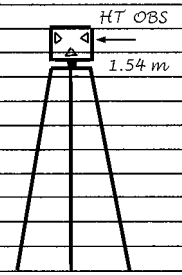

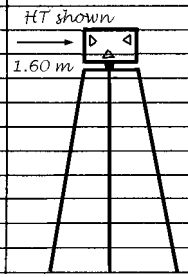

SAMPLE

DA Form 5817-R, AUG 89

Figure 5-7. Recording Observed ZDs

ABSTRACT OF ZENITH DISTANCES

PROJECT: 99E/99/TRA 3
LOCATION:
INSTR. (TYPE) (NO.): Wild T-2 #62119
STATION: LAKE (USC&GS) 1932
ORGANIZATION: 99th Eng Det (Survey)
OBSERVER: SGT Smith
HEIGHT OF STAND: NA

DATE	HOUR	OBJECT OBSERVED	OBJECT ABOVE STATION (Meters)	TELESCOPE ABOVE STATION (Meters)	DIST. OF BLIGHTS (Meters)	REDUCTION TO LINE (BEARING STATIONS)	OBSERVED ZENITH DISTANCE	CORRECTED ZENITH DISTANCE
2 Apr 89	1425	BROOK	1.54	1.60	+0.04	+69.4	90 04 47.5	
	1430	(USACE) 1956					48.5	
		Observed center						
		of target				Mean	90 04 48.0	90 06 57.4

Slope distance = 8683.421 m

SAMPLE

DATE	LIGHT SHOWN TO STATION	HEIGHT OF LIGHT* ABOVE STATION (Meters)	DATE	LIGHT SHOWN TO STATION	HEIGHT OF LIGHT* ABOVE STATION (Meters)
2 Apr 89	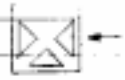 BROOK (USACE) 1956	1.54 m at center			

*Height of Light (or object above station) should also be entered on Abstract of Zenith Distances of station to which light was shown.

COMPUTED BY: SPC Jones — DATE: 2 Apr 89
CHECKED BY: SGT Smith — DATE: 2 Apr 89

DA FORM 1943, FEB 57

For use of this form, see FM 3-34.331; the proponent agency is TRADOC.

USAPPC V1.00

Figure 5-8. Abstracting Zenith Distances

5-23. This formula will also be applied to the vertical observations performed at the station at the other end of the observed line (reciprocal observations). The total length of the lines is multiplied by 0.46 (a constant based on the earth's curvature). Subtract 180° from the sum of the two corrected ZDs to determine the observed difference expressed as minutes of arc. If the two values differ by more than 1′ of arc, perform a second set of reciprocal ZD observations. Differences exceeding 1′ of arc are normally due to errors in observations or unusual refraction in the atmosphere (poor observing conditions).

DISTANCE MEASUREMENT

5-24. The distance between two points can be horizontal, slope, or vertical. A tape measure or an EDM device can measure horizontal and slope distances. In surveying, horizontal-distance measurements are always required. A distance measured on a slope can be trigonometrically converted to its horizontal equivalent by using the slope angle or vertical DE. *Figure 5-9* illustrates a basic example of the geometry used to determine the horizontal distance of a measurement over uneven ground.

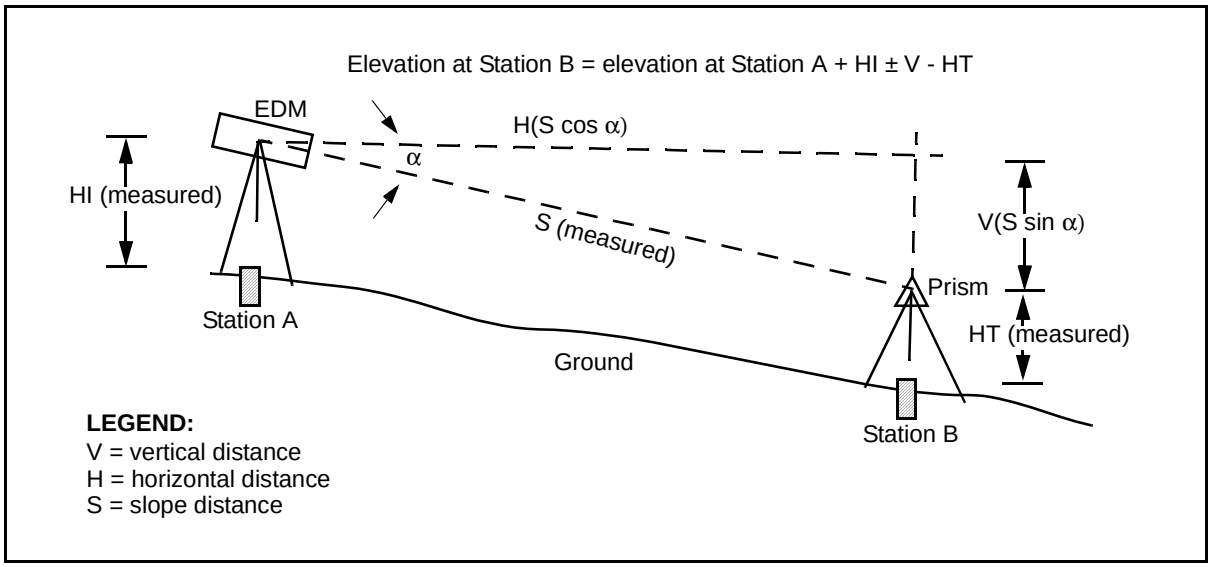

Figure 5-9. Geometry of an EDM (Basic Example)

OBSERVATION PRECAUTIONS

5-25. Distances measured using an EDME are subject to the same errors as direction measuring equipment. The errors also include instrumental component errors. Instrumental errors are usually described as a number of millimeters plus a number of ppm. The accuracy of the infrared EDME AISI is ±(5 millimeters + 5 ppm). The ppm accuracy factor can be thought of in terms of millimeters per kilometer, as there are 1 million millimeters in 1 kilometer. This means that 5 ppm equal 5 millimeters per kilometer. If the AISI is in the D-bar mode, the accuracy is ±(2 millimeters + 3 ppm). Errors introduced by meteorological factors must be accounted for when measuring distances of 500 meters or more. Accurate ambient temperature and barometric pressure

must be measured. An error of 1 degree Celsius (C) causes an error of 0.8 ppm for infrared distances. An error of 3 millimeters of mercury causes an error of 0.9 ppm in distance.

INSTRUMENT CONSTANTS

5-26. Although manufacturers provide instrument and prism constants, it is essential that instrument constants be verified under actual operating conditions, especially for precise surveys. The following factors must be considered:

- The use of a prism typically provides an indicated distance longer than the true value. Applying a negative correction will compensate for this effect. Each prism should have its own constant or correction determined individually, and a master file should be maintained.
- An instrument constant can be either positive or negative and may change due to the phase shifts in the circuitry. Therefore, a positive or a negative correction may be required.
- The algebraic sum of the instrument and the prism constants are referred to as the total constant. The correction for the total constant (equal in magnitude but opposite in sign) is referred to as the total-constants correction, from which the instrument or prism constant can be computed if one or the other is known.

UTM SCALE FACTOR

5-27. The scale factor (a computed factor) affects the measured distance. The scale factor for a particular UTM zone is solely dependent on the location of the survey in relation to its east-west distance from the UTM-zone CM. These zones are 6° wide and originate at 0° Greenwich meridian. North-south distances within the zone have no influence on the scale factor. The scale factor at the CM of UTM zones is 0.9996. The UTM scale factor toward the east and west from the CM increases to approximately 1.0004. Data-reduction procedures using the scale factor are necessary for precise surveys.

CURVATURE OF REFRACTION CORRECTION

5-28. Distance measurements are not on a straight line. The earth's curvature and gravity affect the path traveled by the light beam. For a measured distance of 1 kilometer, the beam changes its path by nearly 7 centimeters. An approximate estimate of this effect is expressed by the following formula:

$$VD = 0.0675\sqrt{km^2}$$

where—

VD = the vertical difference

0.0675 = the estimated effect on the path traveled by light

km = the distance in kilometers (for example, 0.9 or 1.2)

EDME RECORDING

5-29. Distances measured by EDME will be recorded on authorized single-sheet recording forms. *Figure 5-10* shows a completed DA Form 5819-R. If the AISI is used, the appropriate recording media is authorized.

Field Sheet, Infrared
For use of this form, see FM 3-34.331; the proponent agency is TRADOC.

PROJECT West Range Artillery 3.79					
ORGANIZATION 99th Engr Company		DATE 16 Mar 89		APPROX DISTANCE 1,500 m	
ZERO CORRECTION * -0.004	CALIBRATION DATE 7 Mar 89	OBSERVER SPC Wilson		RECORDER PFC White	
INSTRUMENT STATION Elkhorn (99th Engr)89	H.I. 1.54 m	ELEVATION	ELEVATION INSTRUMENT	ECCENTRICITY * TOWARD AWAY 0.000 m	INST NO 1268
REFLECTOR STATION Bullrush (99th Engr)89	H.I. 1.60 m	ELEVATION	ELEVATION REFLECTOR	ECCENTRICITY * TOWARD AWAY 0.000 m	PRISM NO R-1268

METEOROLOGICAL READINGS

	TIME	PRESSURE (Hg) IN. mm	TEMP. (DRY) F° C°
INSTRUMENT	0819	762	16
REFLECTOR	0817	761	10
SUM		1523	31
MEAN		762	16
CORRECTION FACTOR (PPM)		+5	

PRODUCT = UD × PPM
RC = PRODUCT × 10^{-6}
T = UD ± Z ± RC
H′ = $(T)^2 - (d)^2$
H′ = SIN ZD × T
H_{FT} = H′ × 3.280840

SAMPLE

ZD INSTRUMENT TO REFLECTOR

DISTANCE (meters)		
1	1,527	308
2	1,527	306
3	1,527	311
4	1,527	306
5	1,527	306
6	1,527	307
7	1,527	304
8	1,527	310
9	1,527	310
10	1,527	307
SUM	15,273	075

UD	1527.308	MEAN UNCORRECTED SLOPE DISTANCE (UD)	1,527	308
PPM	+5	ZERO CORRECTION° (Z)	0	004
PRODUCT	7636.540	REFRACTIVE INDEX CORRECTION (RC)	0	008
RC	+0.008	CORRECTED SLOPE DISTANCE (T)	1,527	312
DIFF. OF ELEV. (d)		UNCORRECTED HORIZON. DISTANCE (H′)		
		ECCENTRIC CORRECTION * (EC)		
		HORIZON DISTANCE (H_M) / (H_{FT})		

° Obtained from Instrument Calibration.
* Toward Eccentricity must be ADDED.
Away Eccentricity must be SUBTRACTED.

REMARKS

COMPUTED BY	DATE	CHECKED BY	DATE	PAGE OF
SSG Zambrano	01 Oct 96	SFC Wilson	01 Oct 96	

DA Form 5819-R, AUG 89

Figure 5-10. Recording Electronically Measured Distances

ELECTRONIC TOTAL STATIONS

5-30. Electronic theodolites operate in a manner similar to optical instruments. Angle readings can be to 1″ with precision to 0.5″. Digital readouts eliminate the uncertainty associated with reading and interpolating

scale and micrometer data. The electronic angle-measurement system eliminates the horizontal- and vertical-angle errors that normally occur in conventional theodolites. Measurements are based on reading an integrated signal over the surface of the electronic device that produces a mean angular value and completely eliminates the inaccuracies from eccentricity and circle graduation. These instruments also are equipped with a dual-axis compensator, which automatically corrects both horizontal and vertical angles for any deviation in the plumb line. An EDM device is added to the theodolite and allows for the simultaneous measurements of the angle and the distance. With the addition of a data collector, the total station interfaces directly with onboard microprocessors, external PCs, and software. The ability to perform all measurements and to record the data with a single device has revolutionized surveying. Army topographic surveyors use the AISI, which is addressed in detail in Section III.

SECTION II - TARGETS

5-31. A target is generally considered to be a nonilluminating signal. There are two general types of targets—tripods and poles. Both target types may incorporate variations. Targets are constructed of wood or metal frameworks with cloth covers. For easy bisection, a target should be as narrow as possible without sacrificing distinctness. Triangular-shaped targets are the easiest to bisect. Square- and rectangular-shaped targets are the second easiest to bisect. Round targets are the hardest to bisect due to problems in pointing during repeated observations. Round targets should be avoided whenever possible. A target that subtends an angle of 4″ to 6″ of arc is easy to bisect. Since 1″ of arc equals 0.5 centimeter at a l-kilometer distance, 6″ of arch equals 3 centimeters at a 1-kilometer distance and 30 centimeters at a 10 kilometer distance. Under adverse lighting conditions, the target width will have to be increased. To make a target readily visible against both light and dark backgrounds, use material constructed of alternating bands of red and white or orange and yellow. Flags may be added or the background may be filled with blaze-orange cloth to contrast the target. All cloth used on the targets should be slashed after construction to minimize wind resistance and to avoid pilfering in areas where cloth may be valuable.

OPTICAL-THEODOLITE TARGET SET

5-32. The optical-theodolite target set is precise-survey equipment that is generally used for short traverse lines (about 4 kilometers or less). This target set *(Figure 5-11)* consists of a lower and an upper group. The lower group consists of a tribrach with a three-screw leveling head, a circular bubble, and an optical plumbing device. The upper group contains a plate with three triangles; a long, level vial; and a lighting attachment. The upper group is removable and is interchangeable with a theodolite.

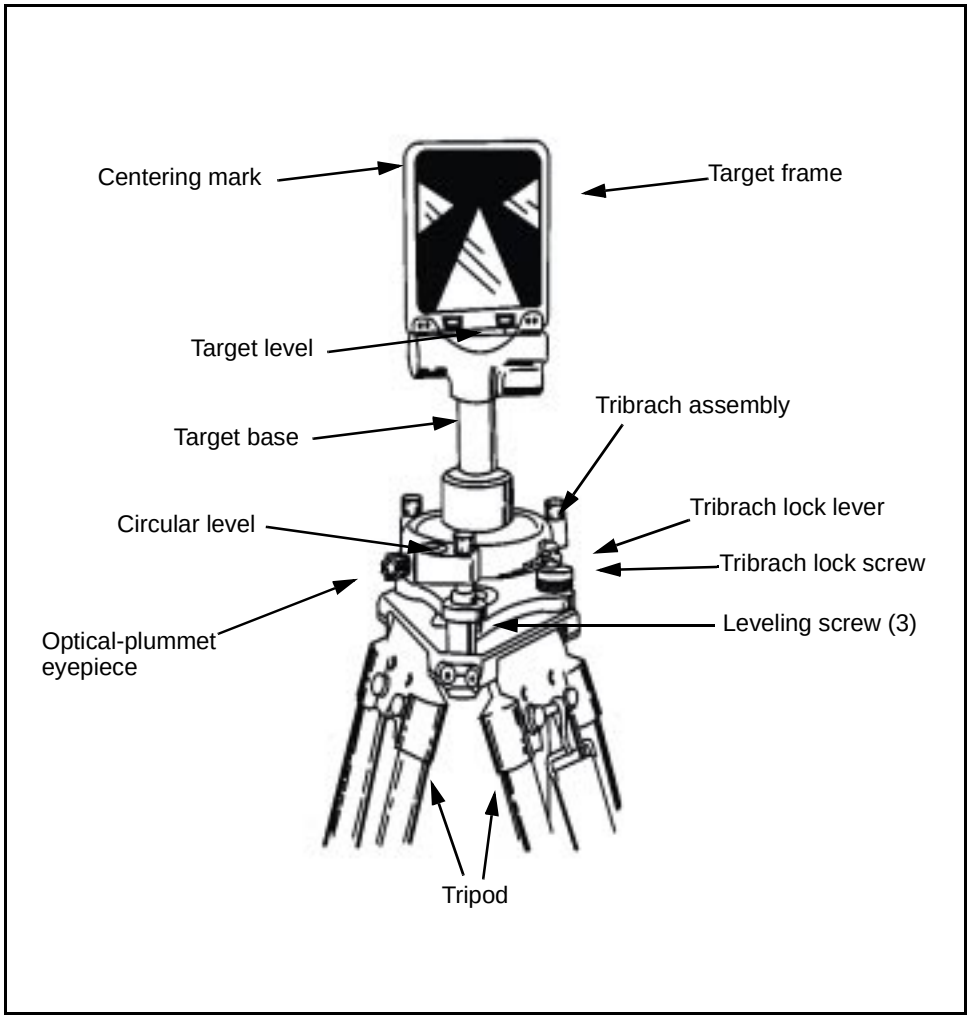

Figure 5-11. Optical-Theodolite Target Set

AISI TARGET SET

5-33. The AISI target set is a combination precise-survey target and infrared signal reflector. It is used for angle and distance measurements. The target assembly *(Figure 5-12, page 5-18)* consists of a lower and an upper group. The lower group consists of a tribrach with a three-screw leveling head, a circular bubble, and an optical-plumbing device that can be illuminated. The upper group contains a long, level vial; a tiltable reflector/target for short-range measurements; and a long-range reflector/target assembly. The long-range assembly contains one to eight reflector prisms and three triangular-shaped target attachments. The reflector/targets are nonilluminating. The short-range tiltable reflector/target may also be attached to a range pole that has an attached circular bubble level.

Figure Description

1 Prism
2 Special prism
3 Tiltable setout prism
4 Foot
5 Chuck
6 Knob
7 Twin prism holder
8 Sight target
9 Tribrach with illumination
10 Tribrach adaptor with level vial
11 Sight rod
12 Telescopic rod
13 Tripod
14 Complete eight prism holder

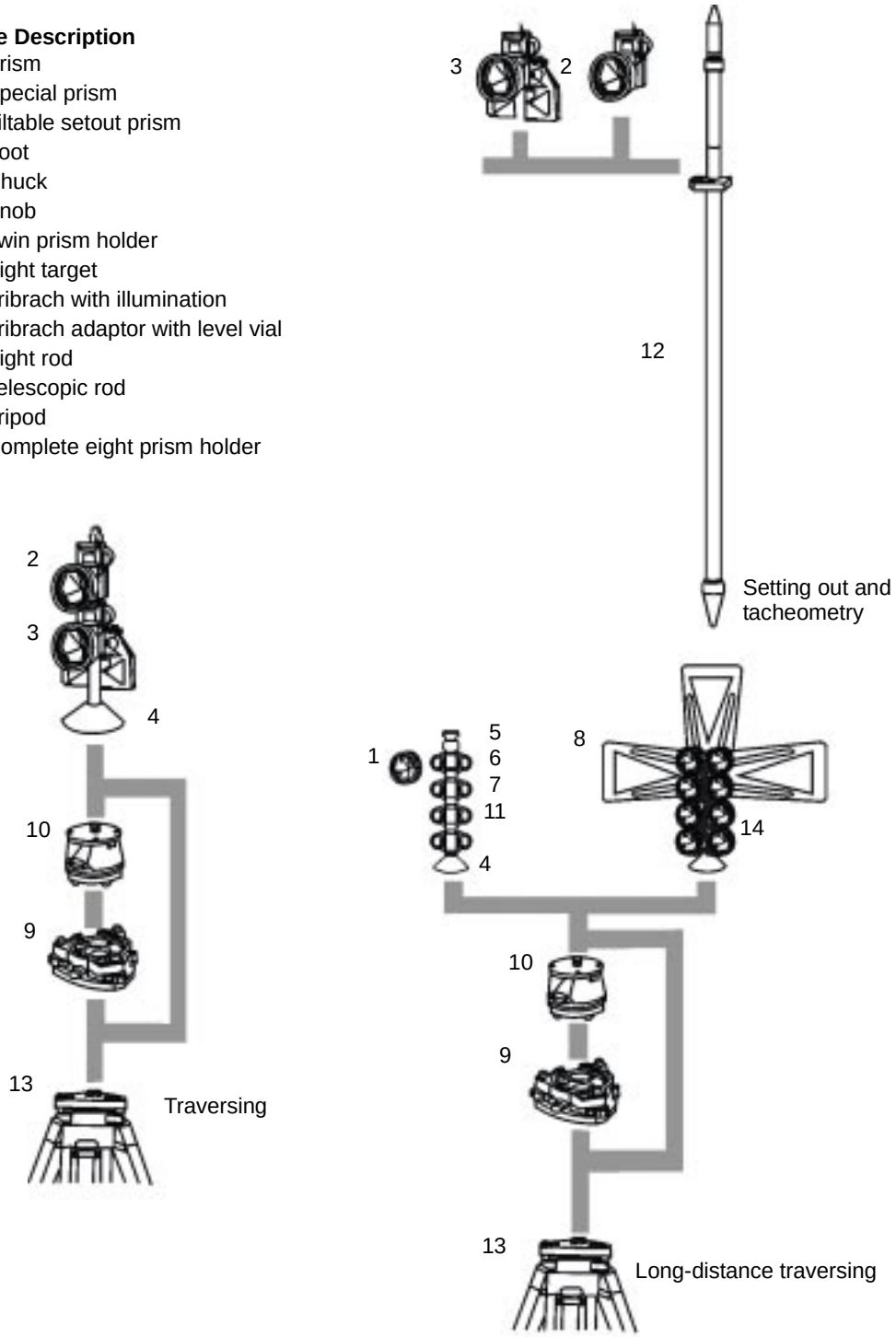

Figure 5-12. AISI Target Assembly

Tripod Target

5-34. The tripod target is the most stable, simplistic in construction, durable, and accurate. It ranges from a simple range pole to a tripod assembly that can be permanently embedded in concrete. All targets are susceptible to the effects of wind and precipitation. The tripod must be guyed or sand bagged and plumbed, and its legs should be securely set-in to prevent lateral movement. On uneven ground, one leg may have to be shortened or dug in to maintain a symmetrical appearance from all directions.

Range-Pole Targets

5-35. A range-pole target is used when the station does not require precise accuracy. The range pole is used to collect site-plan data quickly and in volume.

TARGET SETUP

5-36. Observers sometimes have a difficult and tedious task locating targets. Depending on the type of terrain and foliage in the area and in wooded areas where the targets are not profiled or silhouetted, they are very difficult to locate without direct sunlight shining on them. To expedite the locating of targets, it is sometimes necessary to illuminate the target area. Generally accepted procedures are as follows:

- Use of a handheld flashing mirror.
- Use of a strobe light or a portable light.
- Use of vehicle headlights.

5-37. Once a target area is located, it becomes a simple task to find the exact location of the target. The use of iridescent cloth on the target in place of regular signal cloth is recommended if the cloth can be interchanged.

5-38. In traverse operations where continual backsights and foresights are needed and where distances are not excessive, target sets can be used in a leapfrog technique. The actual distance a target can be seen depends on the background, the lighting, and the weather. Care must be taken when pointing a target at the observer so that the view is not distorted through the telescope. A disadvantage of a target set is that only one at a time may be set at a station. When setting a target, it must be plumbed exactly over a station. A target is said to be plumb when it is centered to within 2 millimeters of the point.

LIGHTED TARGET SETS

5-39. A target set is a precise-survey lighting device used for short traverse lines (about 4 kilometers or less). When a target set is used for night observations, it requires the attachment of an accessory lighting unit to the back of the target. The lighting unit consists of a metal hood with a light bulb mounted in the center. On the older target sets, the hood hangs on two small metal studs mounted at the top rear of the target. On the newer target sets, the hood slides down over the sides of the target from the rear.

TARGET AND TRIBRACH ADJUSTMENT

PLATE BUBBLE

5-40. After the plate bubble has been centered, its position is checked by rotating the target (or instrument) through 180°. If the bubble does not remain centered, bring it halfway back using the foot screws to properly set it. For example, if the bubble position is off the center by four division marks, turn the foot screws to center the bubble until it is only off by two division marks. The bubble should remain in this position while the target is rotated. The target is now level and can be used, but the error should be removed by adjusting the bubble tube.

5-41. The bubble can now be adjusted by turning the capstan screws at the end of the bubble tube until the bubble is centered. Repeat the leveling procedure until the bubble remains in the center of the tube. Adjustments should be done in small increments, no more than half the error should be adjusted out at one time. At the end of the procedure, make sure the capstan screws are tightly secured.

CIRCULAR BUBBLE

5-42. Tribrachs use a circular level for rough and plate-fine leveling. After the plate bubble has been adjusted, the circular bubble can be adjusted (centered) by turning one or more of the adjustment screws located around the circular-bubble assembly.

OPTICAL PLUMMET

5-43. The optical axis of the plummet is aligned with the vertical axis of the target (or instrument) if the crosshairs of the optical plummet stay superimposed on the center of the mark when the tribrach is revolved through 180°. If the crosshairs do not stay superimposed, the plummet can be adjusted using the following steps:

Step 1. Level the tribrach and put the crosshair over the mark and mark a point.

Step 2. Rotate the tribrach 120° and mark a second point.

Step 3. Rotate the tribrach a second 120° and mark a third point.

Step 4. Join the three points into a triangle.

Step 5. Draw a bisecting line from the center of the sides of the triangle to form the center of the triangle *(Figure 5-13[A])*.

Step 6. Adjust the optical plummet to the center of the triangle by loosening one side of the capstan screws and tightening the opposite screw *(Figure 5-13[B])*.

Step 7. Repeat the process to verify the adjustment.

Step 8. Ensure that all screws are snug after the adjustment is completed and that as little stress as possible is exerted on the capstan screws during the process.

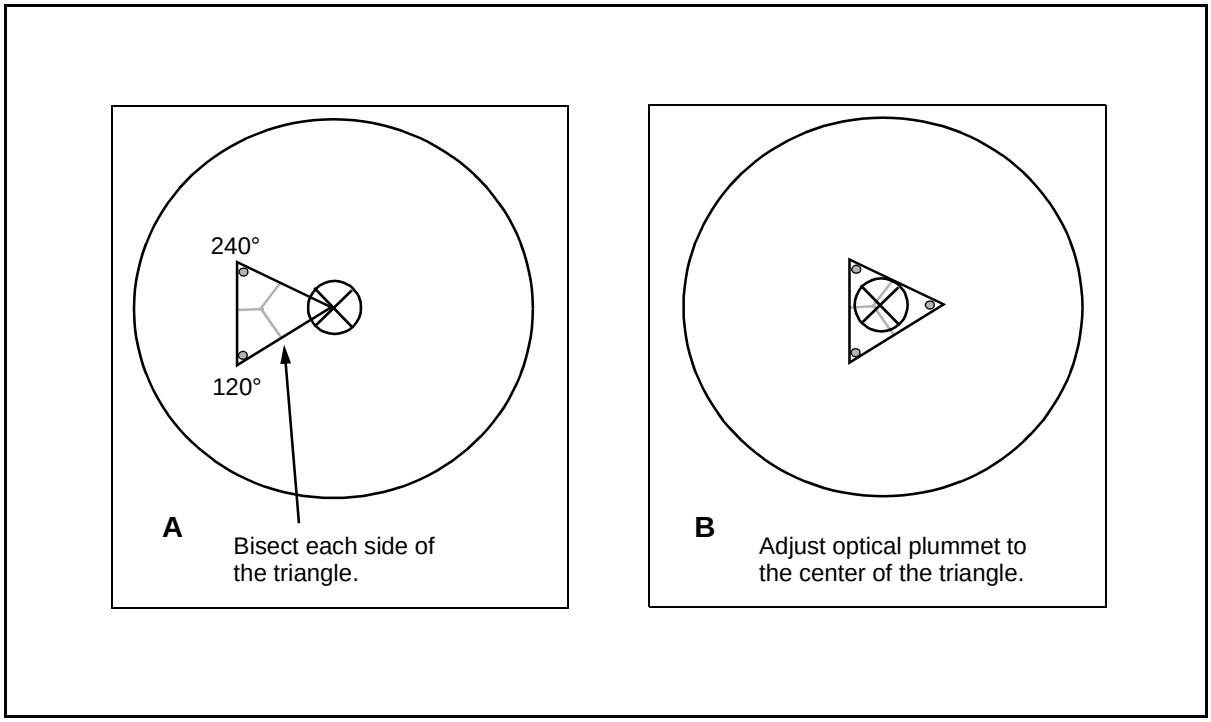

Figure 5-13. Optical-Plummet Adjustment

SIGNALS

5-44. Signals are survey targets that are either illuminated by natural sunlight or are electrically lighted by using batteries. The observations for all second-order, Class I triangulation and traverse are usually done at night by using signal lights because of more stable atmospheric conditions, which allow for better pointings. Observations may be made during daylight hours if the work situation prevents nighttime observations. The most commonly used signal light has a 5-inch reflector. This signal light is used for lines of sight in excess of 8 kilometers. Do not use the 5-inch light on lines of sight shorter than 8 kilometers. A rule of thumb to follow for other light sizes is to add no more than 1-inch to the diameter of the light size for each mile observed.

POINTING

5-45. The exact horizontal and vertical pointing of the light is very important. If the light is not pointed exactly toward the instrument, only a portion of the reflector will be observed. In some cases, this portion will not be plumbed over the station mark. The instrument operator must check the pointing before starting the observations by viewing the light through the telescope. During hazy weather and especially on long lines of sight, the view through the telescope may appear as a bright spot surrounded by a flare. The instrument operator should request that the light keeper adjust the light slightly in a horizontal and vertical arc while it is being viewed through the telescope until the best pointing can be determined. The best pointing is when the light is the brightest. The light is then stopped and locked into position. If the lights are

stacked, the bottom light must be pointed first. It can be adjusted for brightness by adding or removing batteries. The light should never be improperly pointed to reduce its brilliance (this will create an eccentric light). The lighting attachment must be pointed directly at the observer to eliminate the appearance of uneven lighting of the target's triangles.

MASKING

5-46. A light can be masked to reduce the size and brilliance of the beam by covering equal portions of the lens (both above and below and to the right and left of the center of the glass face). Opposite sides of the glass must be masked equally to eliminate eccentricity. This type of masking is very good for distances between 6 and 10 kilometers on normal nights. A sheet of orange scribe paper is required, but any other color will work almost as well. When using the orange paper as a masking material, the light will present an orange glow with a brilliant white cross for the observer to pointing on. At maximum ranges, the orange glow is practically invisible through the telescope, and at minimum ranges, the glow will help in identification of the light.

FOCUSING

5-47. The light is focused by turning a screw at the rear of the bulb socket. By turning this screw, the position of the bulb is changed in relationship to the reflector. If the light is not properly focused, it will appear as a fuzzy ball in the telescope. The light may be focused by shining it on a flat surface about 50 meters away and adjusting the size of the beam until it is slightly larger than the light reflector. When no distant object is available, a field-expedient procedure is to hold one's hand about 6 inches in front of the light and adjust the light until a dark spot the size of a quarter appears in the center of the beam.

BRILLIANCE

5-48. The type of light bulb and the amount of voltage being used will determine the brilliance of the light. The light is issued with two different bulbs: a standard 3.7- and a 6-volt bulb. The amount of voltage needed will vary depending on the lighting requirements. Various battery arrangements are shown in *Figure 5-14*. If dry-cell batteries are not available or are too weak, a field-expedient procedure is to connect two lights (with 6-volt bulbs) in a series and then connect them to a 12-volt wet-cell battery. Never apply more voltage to a bulb than its rated value.

STACKING

5-49. When lights are needed from the same station to several observers, the signal lights are stacked, generally on a range-pole tripod *(Figure 5-15)*. If lights are stacked over a station, they must be leveled and plumbed over that station mark. The lowest light must be leveled and plumbed first, then the other lights should be attached and individually leveled. Care must be taken not to knock the other lights out of plumb when attaching additional lights to the pole.

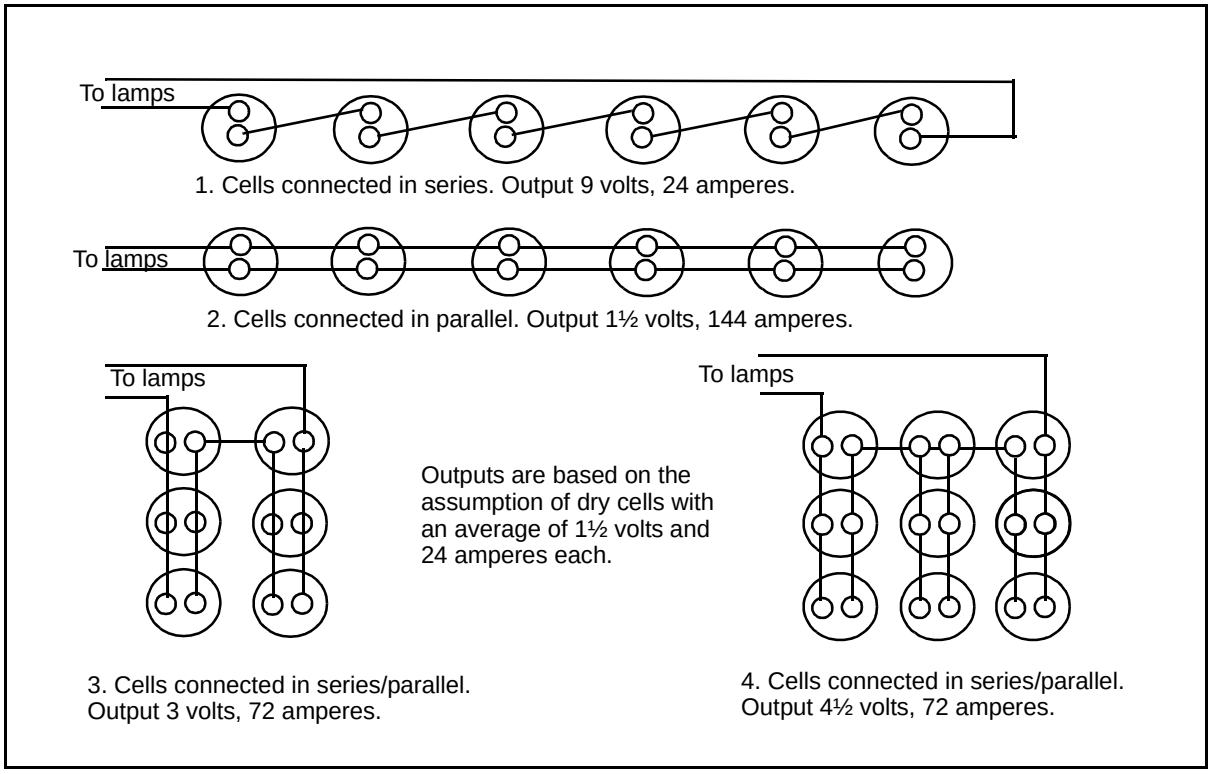

Figure 5-14. Battery Wiring Diagram

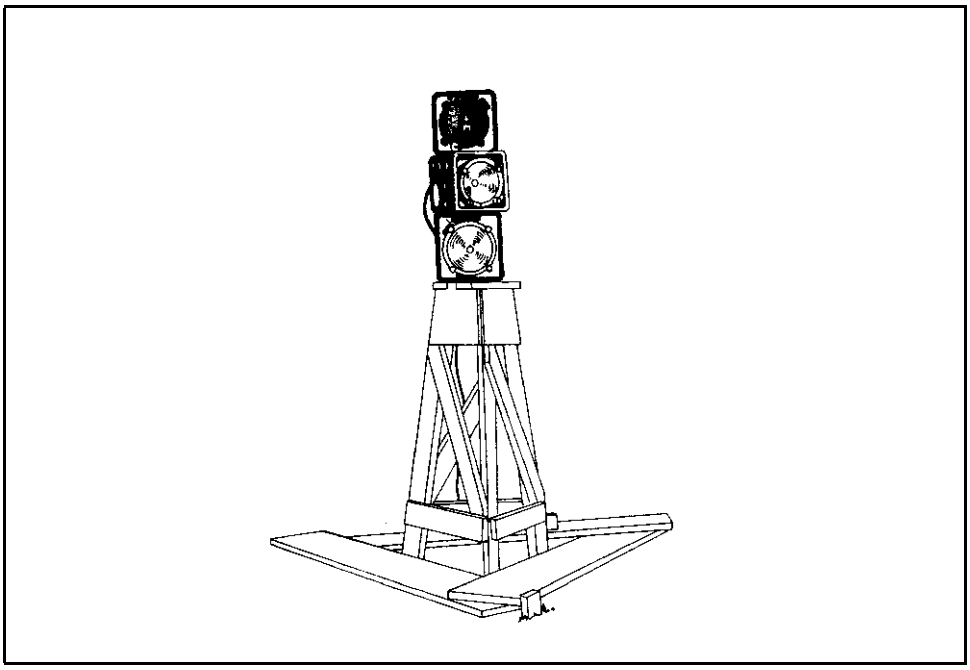

Figure 5-15. Stacking of 5-Inch Signal Lights

RANGING

5-50. When observations are made from a small (low) instrument stand, it is sometimes impossible to plumb the lights directly over the station mark. If this occurs, it is acceptable to use the lights on a range. The lights must be aligned on a range to all stations with a theodolite. The standard theodolite tripod or range-pole tripod is used as a stand and should be from 4 to 30 meters from the station. Care must be taken to avoid introduction of eccentricities.

NOTE: A target set is used as a signal in the same way as when it is used as a target.

EXPEDIENT LIGHTING

5-51. In the absence of a lighted target, a reflector may be used. By pointing a powerful, hand-held lantern flashlight at the reflector, a precise reflection will be returned. There are many other types of expedient lights or signals that can be used when standard equipment is not available or is inoperative. These include such things as the headlight of a vehicle, a masked lantern, a boxed lightbulb, or chemical illumination lights. The survey-party chief must use experience gained in the field and ingenuity to determine the proper expedient for a particular condition or problem.

SECTION III - AISI

5-52. The AISI is an electronic theodolite used to measure horizontal and vertical angles and distances. It represents these measurements on a display panel and can concurrently transfer them to a portable data-recording unit (DRU). The DRU can then transfer the data to an external microprocessor for printing, plotting, and further refinement by surveying software.

DESCRIPTION

5-53. The AISI has two modes—a construction-survey mode with a range of 2 kilometers and a topographic-survey mode with a range of 7 kilometers. The AISI mounts on standard military tripods and consists of the following modular subassemblies:

- An electronic theodolite (a digital, automatic angle- and distance-reading/recording instrument with an electronic display/control panel).
- A DRU (an external memory device for storing data from the theodolite).

5-54. The AISI interfaces with microprocessors, printers, and plotters. It transfers digital data directly from its DRU (via a cable interface) to the microprocessor. The data is then refined by a fully integrated, 3D, ground-modeling, drafting-design system. The data can also be manually input to any CAD software program.

5-55. The AISI measures distances from 2 meters to 7 kilometers with a digital readout of 1 millimeter and is accurate to ±2 millimeters + 3 ppm over the measured distance. The horizontal and vertical angles are measured to an

accuracy of 1″ of arc. The AISI has an electronic leveling device called a dual-axis compensator and adjusts for horizontal and vertical leveling with errors of 6″ or less. The system has built-in communications with a range of 1 mile, an illuminated reticle for night operations, a 60-kilobyte memory capacity, and an alphanumeric keyboard and is powered by two dual-voltage, rechargeable, 12-volt nicad battery packs.

COMPONENTS

5-56. A detailed list of components for the AISI is described in TM 5-6675-332-10. The basic components for the AISI are shown in *Figure 5-16, page 5-26*. They are as follows:

- A transport case.
- A tribrach with an optical plummet, a battery pack, and a tribrach battery cable.
- A lens and an eyepiece cover.
- A DRU and a DRU/AISI/battery cable.
- Internal and external nicad batteries.
- A battery charger and a charging converter.

LEVELING

5-57. The AISI uses a leveling device called a dual-axis compensator. It is an electronic device that senses the pull of gravity and uses two imaginary planes (one parallel to the instrument's face and the other perpendicular to that plane) at the base of the instrument for determining the level. The display simulates an actual bubble level, and foot screws are used to adjust the display bubble. The instrument then adjusts the horizontal and vertical axis to compensate for the instrument not being level. The working range of the compensator is 6′. That means that the instrument can be up to 6′ off of level and still adjust the horizontal and vertical axis. The sensitivity of the display-bubble graduations is 6″ in the fine-level mode and 20″ in the coarse-level mode.

QUICK CHECK

5-58. A quick check is used to see if the AISI needs to be run through a collimation test. This procedure should be done at least once a day and also every time the instrument operator changes. Any time the quick check fails, the AISI should be calibrated. This check compares the sightings at a point target in the reverse and the direct modes. Pressing the angle-measure (A/M) key for each sighting will show the difference in the horizontal aim (dH) and the difference in the vertical aim (dV) on the screen. Failure is determined when the check of the dH and the dV is more than 5″ for horizontal and more than 10″ for vertical from the mean. The collimation test will produce a value to correct the angles *(Figure 5-17, page 5-27)*. The procedures for the collimation test are described in TM 5-6675-332-10.

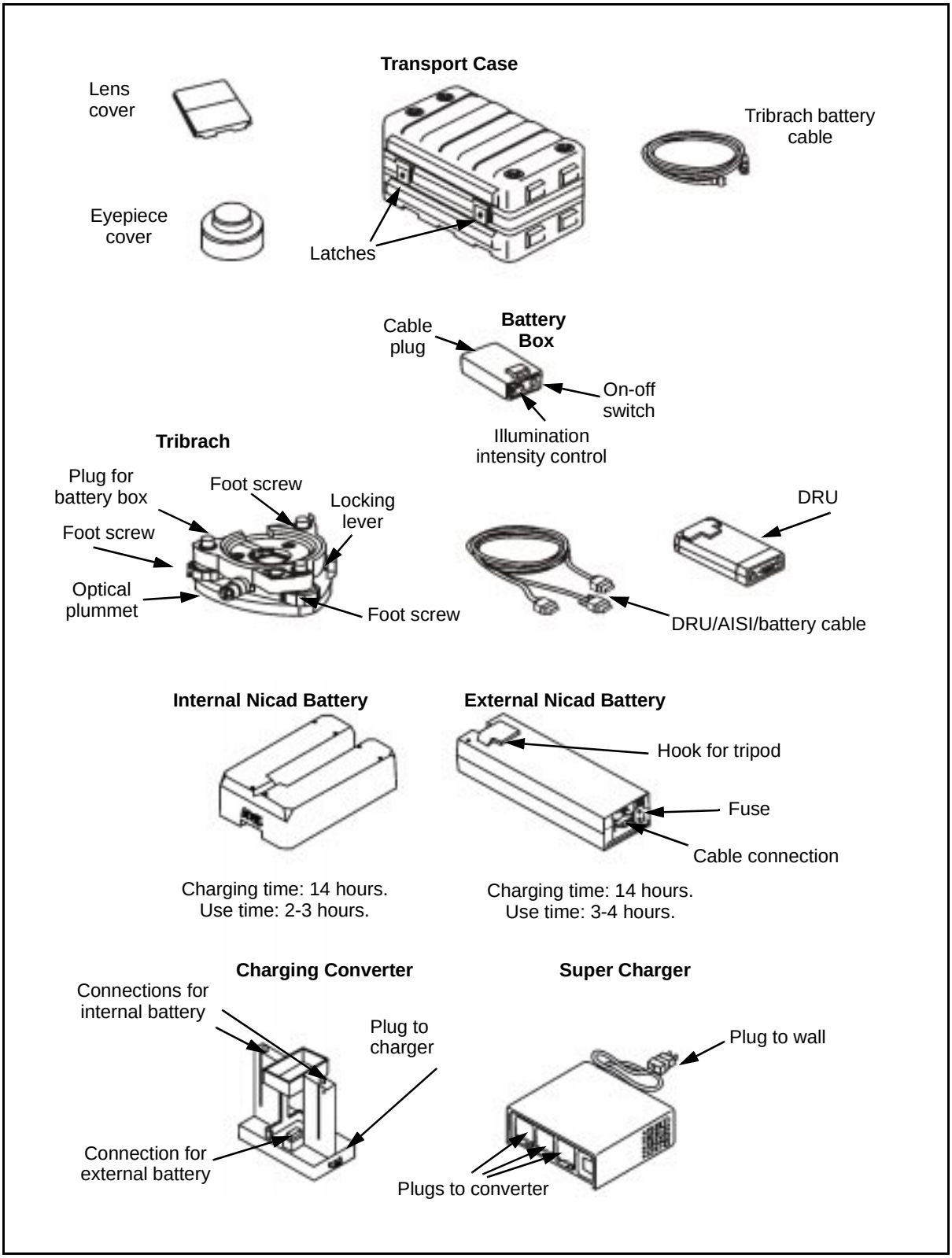

Figure 5-16. AISI System Components

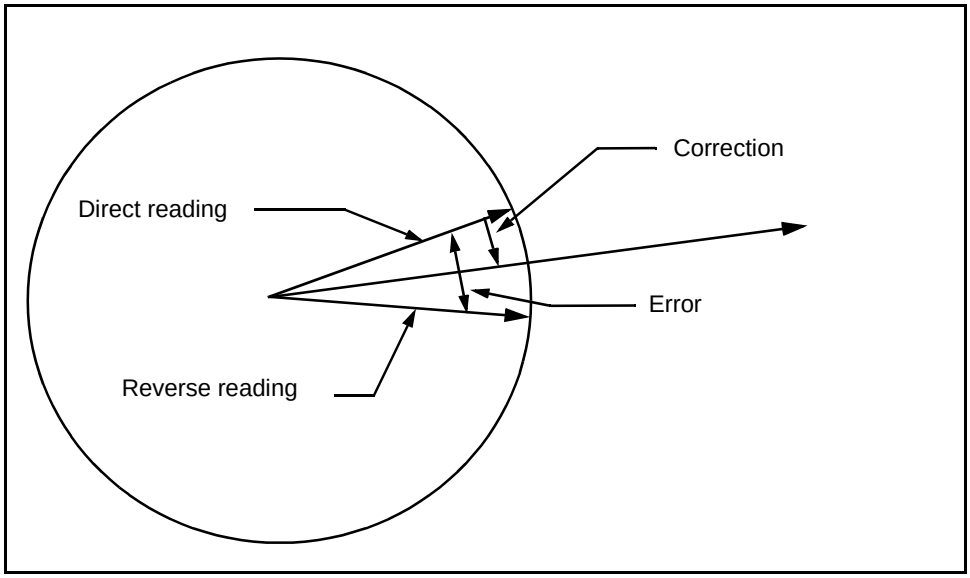

Figure 5-17. Quick-Check Example

DATA COLLECTION

5-59. The AISI has two ways of collecting data—the coordinate method and the traverse method. In the coordinate method, all coordinates of points are collected in the field and all computations are conducted internally in the AISI. In the traverse method, all data is stored in the AISI in the form of raw angles and distances. This data is then downloaded into a survey software to compute coordinates. Surveyors determine which method to use. *Table 5-2* shows the pros and cons for each method.

Table 5-2. Two Methods of AISI Data Collection

Coordinate Method		Traverse Method	
Pros	**Cons**	**Pros**	**Cons**
Can use without survey software.	User needs to have starting control.	Known coordinates do not have to be known in the field.	User needs to know how to operate the survey software.
Can label/stake points in the field.	Coordinates can not be readjusted.	Topographic points can be readjusted.	
	No proof of where or how coordinates were derived.	Raw data is stored for proof of how the coordinates were derived.	

COORDINATE METHOD

5-60. The coordinate method is used to collect coordinates for points that require little or no use of a survey software. Before using this method, the user-defined sequence (UDS) and coordinates for the starting control must be entered into the AISI. The result of this method is a visual display of

northings, eastings, and elevations. The angles are collected in Face I only. These points are also stored in a job file and can be converted to a points file with the use of survey software.

TRAVERSE METHOD

5-61. The traverse method is used to collect data that will be processed and adjusted by survey software. This method provides a digital copy of the collection process. The angles are measured in Face I and Face II and errors can be accounted for. The results can be compared to standards and specifications. Before starting the UDS, the starting coordinates must be entered into the AISI.

DATA STORAGE

5-62. The AISI is equipped with internal memory and an external memory device or DRU for storage of raw data, point information, and calculated coordinate data. Memory units make it easier to check and identify the data after collection. Two types of data (survey measurements [job files] and known coordinates and elevations [area files]) are saved in the memory. These job and area files consist of separate expansive memories and can be updated individually at any time.

Job Files

5-63. Job files are given a numeric, alpha, or alphanumeric title to permit later identification. All survey data is stored in a job file and includes the calculated coordinate and elevation data. When complete, these files can be transferred to a PC.

Area Files

5-64. Area files can be manually input and then stored or transferred from a PC. Several different files can be prepared in advance of the particular survey job. All known data can be stored for a project before departing to the job site.

FILE TRANSFER

5-65. The AISI can be connected to a PC or an external DRU. Information can be transferred between either peripheral via a built-in serial interface. The instrument is connected to the DRU by a DRU/AISI/battery cable. The connection from the instrument to the PC is made with a standard 9-pin cable. Data transfer through the serial port requires that the standard parameters or protocol be set. When job and area files are transferred, they are copied but not erased. The original file remains in the device and serves as a backup for the project. Files can be deleted manually from the instrument or from the PC. Deleting files should only be done after the project is completed and properly archived.

FILE EDITING

5-66. The edit module allows viewing and editing of data within the recording device and the external DRU or directly from the keyboard of the instrument.

Edit functions include search, delete, insert, and change. The editing features are menu driven with the command options displayed on a screen. Options are selected using the keyboard. In the editing module, errors such as HT and station number can be checked and changed by the instrument operator in the field to ensure correctness before leaving the site.

COMMUNICATIONS

5-67. The AISI contains an internal communication system that enables speech communication to be carried out from the instrument to the receiver prism. This system is a one-way communication from the instrument to the reflector prism. There is a small microphone on the instrument panel that is activated from the control panel. When activated, the measuring beam is used entirely for speech transmission. This provides a communication channel without interference and without the need for a special radio-frequency permit. This type of communication relies on good planning between the instrument operator and the rodman to gather the appropriate data without errors or the need to revisit the area to fill in gaps in the collection process. The maximum range that this system is considered to function well is 1,600 meters in good weather.

INSTRUMENT MAINTENANCE

5-68. The AISI is designed to withstand normal electromagnetic disturbance from the environment. However, it contains circuits that are sensitive to static electricity. Only the manufacturer is authorized to open the cover. To do so by anyone else will void the warranty. The AISI is designed and tested to withstand field conditions, but like other precision instruments, it requires care and maintenance. Avoid rough jolts and careless treatment.

CLEANING

5-69. Keep the lenses and reflectors clean. Always use lens paper or other material intended for cleaning optics (antistatic lens paper, a cotton wad, or a lens brush). Caution must be exercised when the instrument is cleaned, especially when removing sand and dust from the lenses and the reflectors. Never use a coarse or dirty cloth or hard paper.

CONDENSATION

5-70. After surveying in moist weather, the instrument should be taken indoors. The instrument should be removed from the transport case and left to dry naturally. Allow condensation that has formed on the lens to evaporate.

TRANSPORTING

5-71. Keep the AISI protected and in an upright position when it is not being used or is being transported. Never carry the instrument while it is mounted on a tripod, because this will damage the tribrach screws. The diode used to send the measurement signal is sensitive to shock, especially when the instrument is on its side. The instrument should always be transported in its case with the case locked and in an upright position. For shipment, the sender and the receiver should be clearly marked on the transport case.

BATTERIES

5-72. The AISI has two types of batteries—an internal, 1-ampere-hour (AH) battery and an external, 2-AH battery. Both are 12-volt, rechargeable nicad batteries and take 14 hours to recharge. The 1-AH battery can be fast charged in 2 hours and when fully charged, will supply power for 2 continuous hours. The 2-AH battery is attached to the tripod and connected via a special cable. It can supply power for an additional 4 continuous hours. The AISI can also be connected to a 12-volt vehicle battery.

5-73. The batteries are charged with a 115-volt alternating current (AC) battery charger. Three batteries can charge simultaneously when the charger is connected to a charging converter. The batteries are first discharged before recharging begins. Once charged, the system will switch to a trickle charge to maintain capacity. The condition of the battery is better preserved by using the battery until the low-battery indicator or automatic cutoff function is activated. If the battery cuts off during use, the instrument will retain the observation or function being used for up to 2 hours while the battery is being recharged.

NOTE: The AISI has an internal clock battery. A warning will be displayed when this battery is low. If this battery goes dead, the instrument will require reprogramming. When the warning appears, make arrangements to send the AISI to the repair shop as soon as possible. The internal battery will need to be replaced about every two years.

SECTION IV - CAD INTERFACE

5-74. CAD software is commonly available and can produce results from basic survey plots to finished map sheets. Such drafting tools offer surveyors more accuracy, efficiency, flexibility, and quality in the production of hard-copy plots. CAD software, which is available through an Armywide contract, is used in topographic and construction survey units.

TOTAL-STATION DATA COLLECTION AND INPUT

5-75. Survey data can be entered into a CAD program by a variety of techniques. The most favorable means is through a digital data file produced by electronic survey equipment. Total stations, GPS-S receivers, and some electronic levels are commonly capable of recording survey data on electronic data collectors. Such logging of data greatly increases the efficiency and accuracy of data collection and eliminates human error associated with field-note recording. These digital data files also eliminate the tedious and error-prone manual entry of data. Automatic data logging clearly offers a superior method for recording and processing survey angles, distances, or coordinates, but it does not eliminate the requirement for field notes. To establish complete survey records, field personnel must always record survey conditions, the project description, unplanned procedures, and any other pertinent information.

5-76. For total-station instruments, various software/hardware packages are available to collect and process survey data. The AISI and a CAD interface offer a full set of hardware and software for logging survey data, performing postprocessing and adjustments, and importing data into a PC workstation for further processing. CAD data-collection packages store the input of X, Y, and

Z coordinates in the American Standard Code for Information Interchange (ASCII) format with a descriptor or code to indicate the surveyed feature along with alphanumeric description data. The data can then be managed into more complex and sophisticated packages of information to produce map products of great detail. The resulting product can then be plotted in hard copy or transferred into a more common format.

PLOTTING

5-77. CAD systems offer extreme flexibility in data plotting. The sheet sizes are dependent on the plotter or printer. The missions commonly performed by topographic surveyors require a standing floor-mounted plotter that is capable of plotting D- and E-size sheets. Ink-jet plotters can output the most desired media, including paper and mylar. Plotters that use ink-jet technology are common, inexpensive, and easy to maintain. The quality of the plot is equal to or greater than that of professional, manually drafted plots. These devices produce objects of any shape, color, or size; eliminate the need for tedious manual drafting by cartographic specialists; and provide topographic surveyors a necessary self-sufficient capability.

Chapter 6

Traverse

Traversing is a form of a control survey that is used in a wide variety of surveys. Traverses are a series of established stations that are linked together by the angle and distance between adjacent points. The angles are measured by theodolites, and the distances are measured by an EDME. The AISI total station combines both of these functions. Detailed information pertaining to traverse design, data collection, and limitations are discussed in the SSGCN. Appendix B summarizes the standards for control surveys. Appendix C details the recommended procedures for traverse computations.

STARTING CONTROL

6-1. The purpose of a traverse is to locate points relative to each other on a common grid. Surveyors need certain elements of starting data, such as the coordinates of a starting point and an azimuth to an azimuth mark. There are several ways to obtain the starting data, and surveyors should make an effort to use the best data available to begin a traverse. Survey-control data is available in the form of existing stations (with the station data published in a trig list) or new stations (established by local agencies who can provide the station data).

OPEN TRAVERSE

6-2. An open traverse *(Figure 6-1, page 6-2)* originates at a starting station, proceeds to its destination, and ends at a station with an unknown relative position. The open traverse is the least desirable traverse type, because it does not provide the opportunity for checking the accuracy of the fieldwork. All measurements must be carefully collected, and every procedure for checking position and direction must be used. Therefore, the planning of a traverse should always provide for closure of the traverse.

CLOSED TRAVERSE

6-3. A closed traverse either begins and ends on the same point or begins and ends at points with previously determined (and verified) coordinates. In both cases, the angles can be closed and closure accuracy can be mathematically determined.

TRAVERSE CLOSED ON A STARTING POINT

6-4. A traverse that starts at a given point, proceeds to its destination, and returns to the starting point without crossing itself in the process is referred

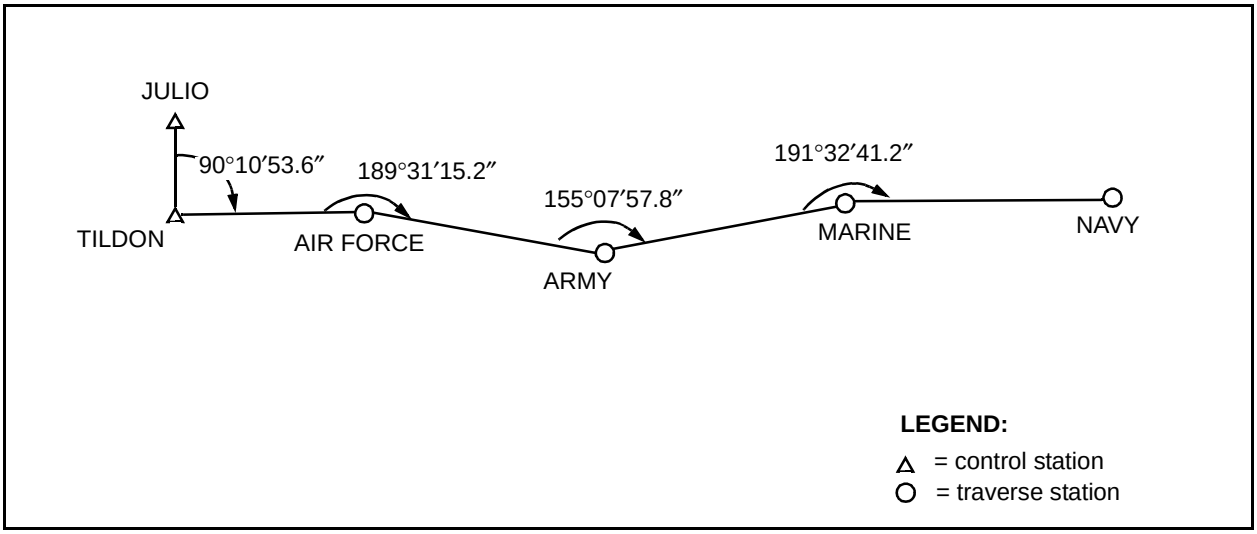

Figure 6-1. Open Traverse

to as a loop traverse *(Figure 6-2)*. Surveyors use this type of traverse to provide control if there is little existing control in the area and only the relative position of the points is required. While the loop traverse provides some check of the fieldwork and computations, it does not ensure the detection of all the systematic errors that may occur in a survey.

TRAVERSE CLOSED ON A SECOND KNOWN POINT

6-5. A traverse that is closed on a second known point begins at a point of known coordinates, moves through the required point(s), and terminates at a second point of known coordinates. Surveyors prefer this type of traverse because it provides a check on the fieldwork, computations, and starting data. It also provides a basis for comparing data to determine the overall accuracy of the work.

FIELDWORK

6-6. In a traverse, three stations are considered to be of immediate significance. These stations are the rear, the occupied, and the forward. The rear station is the station that the surveyors who are performing the traverse have just moved from, or it is a point to which the azimuth is known. The occupied station is the station at which the party is located and over which the instrument is set. The forward station is the immediate destination of the party or the next station in succession.

HORIZONTAL ANGLES

6-7. Always measure horizontal angles at the occupied station by sighting the instrument at the rear station and measuring the clockwise angles to the forward station. Make instrument observations to the clearest and most defined and repeatable point of the target that marks the rear and forward stations. Measurements are repeated according to the required specifications.

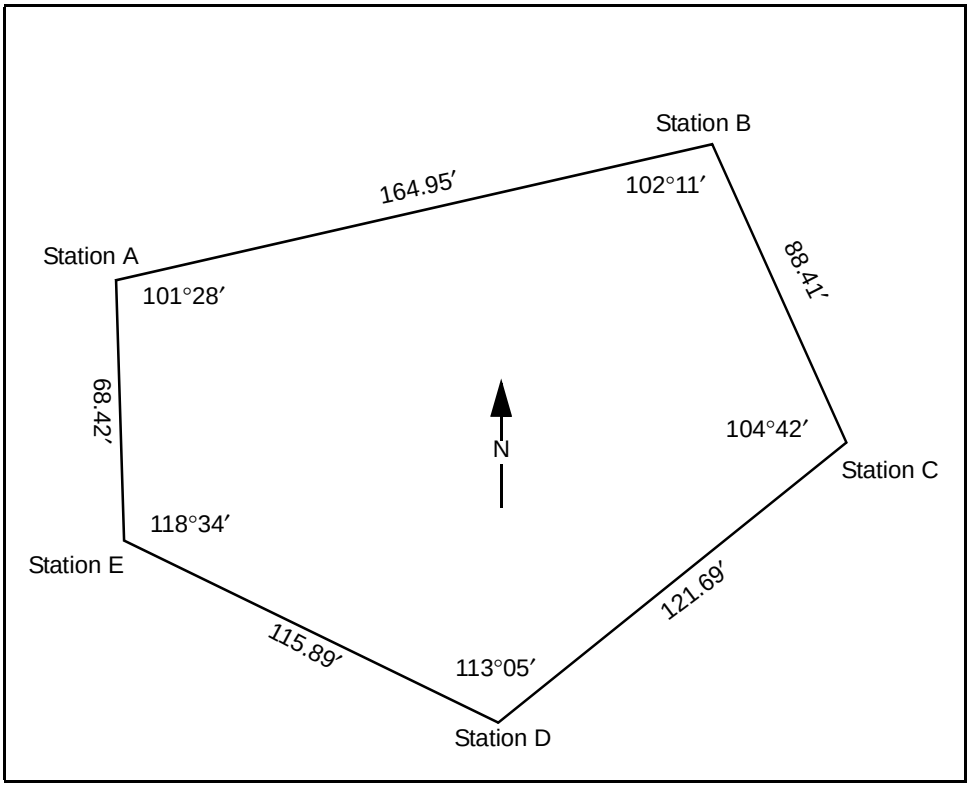

Figure 6-2. Closed Traverse (Loop)

DISTANCE

6-8. Use an EDME to measure the distance in a straight line between the occupied and the forward stations. Measurements are repeated according to the required specifications.

TRAVERSE STATIONS

6-9. Select sites for traverse stations as the traverse progresses. Locate the stations in such a way that at any one station both the rear and forward stations are visible. The number of stations in a traverse should be kept to a minimum to reduce the accumulation of instrument errors and the amount of computing required. Short traverse legs (sections) require the establishment and use of a greater number of stations and may cause excessive errors in the azimuth. Small errors in centering the instrument, in station-marking equipment, and in instrument pointings are magnified and absorbed in the azimuth closure as errors in angle measurement.

STATION MARKERS

6-10. Station markers are usually 2- by 2-inch wooden stakes, 6 inches or more in length. These stakes (hubs) are driven flush with the ground. The center of the top of the hub is marked with a surveyor's tack or an X to designate the exact point of reference for angular and linear measurements.

6-11. To assist in recovering a station, surveyors drive a reference (witness) stake into the ground so that it slopes toward the station. Surveyors must write the identification of the station on the reference stake or on a tag that is attached to the stake with a lumber crayon or a china-marking pencil. Signal cloth may also be tied to the reference stake to further assist in identifying or recovering a station.

STATION SIGNALS

6-12. A signal must be erected over survey stations to provide a sighting point for the instrument operator. The survey target set (discussed in Chapter 5) is the most commonly used signal.

TRAVERSE-PARTY ORGANIZATION

6-13. The number of personnel available to perform survey operations depends on the unit's TOE. The organization of these people into a traverse party and the duties assigned to each member will depend on the unit's SOP. The organization and duties of a traverse party are based on the functional requirements of the traverse.

6-14. The party chief selects and marks the traverse-station locations and supervises the work of the other party members. The party chief also assists in the survey recon and planning.

6-15. The survey team consists of the following members:

- **Instrument operator.** The instrument operator measures the horizontal angles and distances at each traverse station.
- **Recorder.** The recorder keeps the field notes in a field notebook and records the angles and distances measured by the instrument operator and all other information pertaining to the survey.
- **Rodman.** The rodman assists the party chief in marking the traverse stations, removes the target from the rear station when signaled by the instrument operator, and moves the target forward to the next traverse station.

AZIMUTH COMPUTATIONS

6-16. The azimuth of a line is the horizontal angle (measured clockwise) from a base direction to the line in question. To compute a traverse, surveyors determine the azimuth for each traverse leg. The azimuth for each succeeding leg is determined by adding the value of the measured angle at the occupied station to the value of the azimuth from the occupied station to the rear station. On occupation of each successive station, the first step is to compute the back azimuth of the preceding leg (the azimuth from the occupied station to the rear station).

AZIMUTH ADJUSTMENT

6-17. Determine the need for an adjustment before beginning final-coordinate computations. If the angular error of closure (AEC) falls within the computed

AE, the azimuths of the traverse may be adjusted. The allowable AEC is determined for third-order, Class I traverse by the following formula:

$$AEC = 10'' \sqrt{N}$$

where—
10″ = AE for a single station
N = the number of traverse segments

If the azimuth error does not fall within the AEC, reobserve the station angles of the traverse in the field.

AZIMUTH CORRECTION

6-18. Before determining a correction, compute the actual azimuth error. The azimuth error is obtained by subtracting the known closing azimuth from the computed closing azimuth. This difference provides the angular error with the appropriate sign. By reversing this sign, the azimuth correction (with the appropriate sign) is obtained.

6-19. A traverse adjustment is based on the assumption that errors have accumulated gradually and systematically throughout the traverse. An azimuth correction is applied accordingly. The correction is distributed systematically among the angles of the traverse.

6-20. After the angles are adjusted, compute the adjusted azimuth of each leg by using the starting azimuth and the adjusted angles at each traverse station. Compute the adjusted azimuth throughout the entire traverse and check against the correct azimuth to the closing azimuth mark before beginning any further traverse computations.

AZIMUTH-BEARING ANGLE RELATIONSHIP

6-21. The trigonometric functions (such as sine [denoted by sin], cosine [denoted by cos], and tangent [denoted by tan]) of the azimuth and the bearing are numerically the same. Surveyors may use either the azimuth or the bearing to compute the traverse. The choice will depend on the computer and the equipment available.

AZIMUTH AND BEARING

6-22. If a calculator with angular functions is available, the use of the azimuth is easier since it eliminates the need to compute the bearing. If the functions must be determined from tables, it is necessary to first compute the bearing angles since the tabulation of functions is normally published for angles of 0° to 90°. The bearing of a line is the acute angle (an angle less than 90°) formed by the line in question and the north-south line through the occupied point. The bearing illustrates the relationship between the azimuth of a line and its direction.

QUADRANTS

6-23. Bearing angles are computed from a given azimuth depending on the quadrant in which the azimuth lies. When the azimuth is in the first quadrant

(0° to 90°), the bearing is equal to the azimuth. When the azimuth is in the second quadrant (90° to 180°), the bearing is equal to 180° minus the azimuth. When the azimuth is in the third quadrant (180° to 270°), the bearing is equal to the azimuth minus 180°. When the azimuth is in the fourth quadrant (270° to 360°), the bearing is equal to 360° minus the azimuth. Since the numerical values of the bearings repeat in each quadrant, the bearings must be labeled to indicate which quadrant they are in. The label must indicate whether the bearing angle is measured from the north or south line and whether it is east or west of that line. For example, a line with an azimuth of 341°12′30″ falls in the fourth or northwest (NW) quadrant and its bearing is N 18°47′30″ W.

COORDINATE COMPUTATIONS

6-24. If the coordinate of a point and the azimuth and distance from that point to a second point are known, the coordinate of the second point can be computed. The azimuth and distance from Station A to Station B are determined by measuring the horizontal angle from the azimuth mark to Station B and the distance from Station A to Station B.

6-25. A grid is a rectangular system with the easting and the northing lines forming right angles at the point of intersection. The computation of the difference in northing (dN) (side Y) and the difference in easting (dE) (side X) requires the computation of a right triangle. The distance from Station A to Station B is the hypotenuse of the triangle, and the bearing angle (azimuth) is the known angle. The following formulas are used to compute dN and dE:

dN = cos azimuth x distance

dE = sin azimuth x distance

6-26. If the traverse leg falls in the first (northeast [NE]) quadrant, the value of the easting increases as the line goes east and the value of the northing increases as it goes north. The product of the dE and the dN are positive and are added to the easting and northing of Station A to obtain the coordinate of Station B.

6-27. When using trigonometric calculators to compute a traverse, enter the azimuth angle, and the calculator will provide the correct sign of the function and the dN and the dE. If the functions are taken from tables, the computer provides the sign of the function based on the quadrant. Lines going north have positive dNs; lines going south have negative dNs. Lines going east have positive dEs; lines going west have negative dEs.

6-28. The following are examples of how to determine the dN and the dE:

- Given an azimuth from Station A to Station B of 70°15′15″ and a distance of 568.78 meters (this falls in the first [NE] quadrant), compute the dN and the dE.
  dN = cos 70°15′15″ x 568.78 = +0.337848 x 568.78 = +192.16 m
  dE = sin 70°15′15″ x 568.78 = +0.941200 x 568.78 = +535.34 m
- Given an azimuth from Station B to Station C of 161°12′30″ and a distance of 548.74 meters (this falls in the second [southeast] [SE] quadrant), compute the dN and the dE.

dN = cos 161°12′30″ x 548.74 = -0.946696 x 548.74 = -519.49 m
dE = sin 161°12′30″ x 548.74 = +0.322128 x 548.74 = +176.76 m

- Given an azimuth from Station C to Station A of 294°40′45″ and a distance of 783.74 meters (this falls in the fourth [NW] quadrant), compute the dN and the dE.
  dN = cos 294°40′45″ x 783.74 = +0.417537 x 783.74 = +327.24 m
  dE = sin 294°40′45″ x 783.74 = -0.908660 x 783.74 = -712.15 m

ACCURACY AND SPECIFICATIONS

6-29. The overall accuracy of a traverse depends on the equipment, the procedures used in the measurements, the accuracy achieved, and the accuracy of the starting and closing data. An accuracy ratio or ratio of closure (RC) of 1:5,000 is the minimum accuracy sought in topographic surveying. In obtaining horizontal distances, an accuracy of at least 2 millimeters per 100 meters must be obtained. When using a 1″ theodolite, turn the horizontal angles four positions. Keep an angular closure of 10″ per station.

SEA-LEVEL COEFFICIENT

6-30. The corrected field distances must be reduced to sea level. Along any traverse with variations in elevation not exceeding 300 meters, sufficient accuracy may be obtained by computing a sea-level coefficient (SLC) for the entire traverse.

LINEAR ERROR

6-31. To determine the acceptability of a traverse, compute the linear error of closure (LEC) (using the Pythagorean theorem), the AE, and the accuracy ratio. The first step in a closed-traverse case is to determine the linear error in the dN and the dE. In the case of a loop traverse, the algebraic sum of the dNs and the dEs should equal zero. Any discrepancy is the linear error in the dN or the dE.

AE

6-32. The AE should then be computed using the appropriate accuracy ratio (1:5,000 or better) and the total length of the traverse. Compare this to the LEC. If the AE is greater than the LEC, the traverse is good and can be adjusted. If the traverse is not good, it must be redone.

RC

6-33. The RC determines the traverse accuracy and compares it to established standards. The RC is the ratio of the LEC (after it is reduced to a common ratio and rounded down) to the total length of the traverse. If the RC does not fall within allowable limits, the traverse must be redone. It is very possible that the measured distances are correct and that the error can be attributed to large, compensating angular errors.

6-34. The accuracy of a traverse is the ratio of error to the total length of the traverse. The RC must meet the specifications for the order of work being performed. Third-order, Class I accuracy requires an RC of 1:10,000. Accuracy

requirements are identified in DMS ST 031. If the traverse does not meet this specification, no further computations are necessary.

COORDINATE ADJUSTMENT

6-35. Make the adjustment of the traverse using the compass rule. This rule states that for any leg of the traverse, the correction to be given to the dN or the dE is to the total correction for the dN or the dE as the length of the leg is to the total length of the traverse. The total correction for the dN or the dE is numerically equal to the error in northing (En) or the error in easting (Ee), but with the opposite sign.

6-36. When adjusting a traverse that starts and ends on two different stations, compute the coordinates before the error is determined. The correction (per leg) is determined in the same manner, but it is applied directly to the coordinates. The correction to be applied after computing the first leg is equal to the correction computed for the first leg. The correction to be applied after computing the second leg is equal to the correction computed for the first leg plus the correction computed for the second leg. The correction for the third leg equals the correction computed for the first leg plus the correction computed for the second leg plus the correction computed for the third leg and so on throughout the traverse. The final correction must be equal to the total correction required.

Chapter 7

Differential Leveling

Differential leveling is a technique used to determine differences in elevation between points that are remote from each other. Differential leveling requires the use of a surveyor's level together with graduated measuring rods. An elevation is a vertical distance above or below a referenced datum. In surveying, the referenced datum is typically the MSL.

SECTION I - INSTRUMENTS AND EQUIPMENT

7-1. Some of the basic components for leveling are a level, a tripod, rods, and accessories. A level has three major components—a telescope, a level tube, and a leveling head. There are three types of levels used in differential leveling—automatic, digital, and optical-micrometer.

AUTOMATIC LEVELS

7-2. An automatic level uses a gravity-referenced prism or a compensator to orient the line of sight automatically. The instrument can be quickly leveled when a circular bubble level is used. When the bubble is centered, the compensator takes over and maintains a horizontal line of sight. Automatic levels are quick to set up and easy to use and can obtain second-order, Class II precision. The use of an automatic level entails using a freely moving prism that is suspended by a fulcrum or wire as a compensator. The compensator is sensitive to shock and must be kept nearly upright at all times. If the fulcrum or wire breaks, the instrument becomes useless. Gently tapping the instrument, while viewing through the telescope, will cause the line of sight to veer slightly. This verifies that the compensator is working properly.

DIGITAL LEVELS

7-3. The level has been advanced, along with other survey equipment, into using electronic measurements. The digital level uses electronic image processing to determine heights and distances and to automatically record data for future transfer to a PC. The digital level is an automatic level that is capable of normal optical measurements. When used in the electronic mode, together with a rod face that is graduated with a bar code, the instrument captures and processes the image of the bar code. The processed image of the bar code is compared to the image of the entire rod and is programmed in the memory of the instrument. The difference in height and distance is then determined. The digital level contains predetermined programs for running

any type of line or making adjustments to a sighting. The programs store, compute, and transfer the data in a manner similar to that of a total station.

OPTICAL-MICROMETER LEVELS

7-4. Optical-micrometer levels are similar to automatic levels in design. The optical-micrometer level can be purchased as an individual piece of equipment or as an attachment for some automatic levels. Optical-micrometer attachments employ a plane parallel-plate lens, which when rotated will vertically deflect the line of sight of the incoming light ray. The optical-micrometer level subdivides the smallest graduation of the level rod to an accuracy of about ±0.02 of the level-rod graduation, which means a recorded direct reading of 0.001 meter. FGCC standards require an optical micrometer be used for all first-order leveling. Some, but not all, digital levels are capable of meeting the required accuracy. Field operations for optical-micrometer leveling are nearly the same as for three-wire leveling except that optical-micrometer leveling uses double-scale invar rods and shorter sight distances.

LEVELING RODS AND ACCESSORIES

7-5. Leveling rods are manufactured of metal, wood, or fiberglass. They are graduated in feet or meters and can be read directly to the nearest tenth of a foot or centimeter *(Figure 7-1)*. To obtain a more precise reading, the reading is either estimated (single or three-wire method) or read with an optical micrometer or a digital image. Precision leveling requires one-piece rods that are calibrated for accuracy and thermal expansion. For less precise work, an extendable or folding rod may be used. The sole of the rods are made of a metal base, machined for accuracy. Precise rods have a built-in circular bubble level to maintain the plumb of the rod. Placing the rod on a stable, consistent surface and maintaining plumb are keys to completing accurate, differential-leveling measurements.

7-6. The sole of the rod is placed on the BM or a temporary turning point. The turning point can be any hardened surface with a definable and reproducible high point. Manufactured points (for example, the marlinspike and the base plate or turtle) can be used. The marlinspike is a stainless-steel pin that is driven into soft surfaces at an angle and a depth sufficient to support the level rod. The portable base plate is made of cast iron with a machined-steel point to place the rod on. The base plate weighs 2.5 kilograms or more, can be used on any surface, is more stable than the marlinspike, and is a requirement for higher-order vertical surveys.

7-7. There are two types of tripods available for leveling—the fixed-leg and the extension-leg. Either tripod is acceptable for second- and third-order leveling. Generally, fixed-leg tripods are preferred, but conditions and logistics may dictate using extension-leg tripods.

INSTRUMENT TESTING AND ADJUSTMENT

7-8. A collimation test for leveling (C-check) is a field determination of a geodetic level's collimation error (C-factor). If the instrument is placed precisely between two rods, the error is the same for the rear and forward

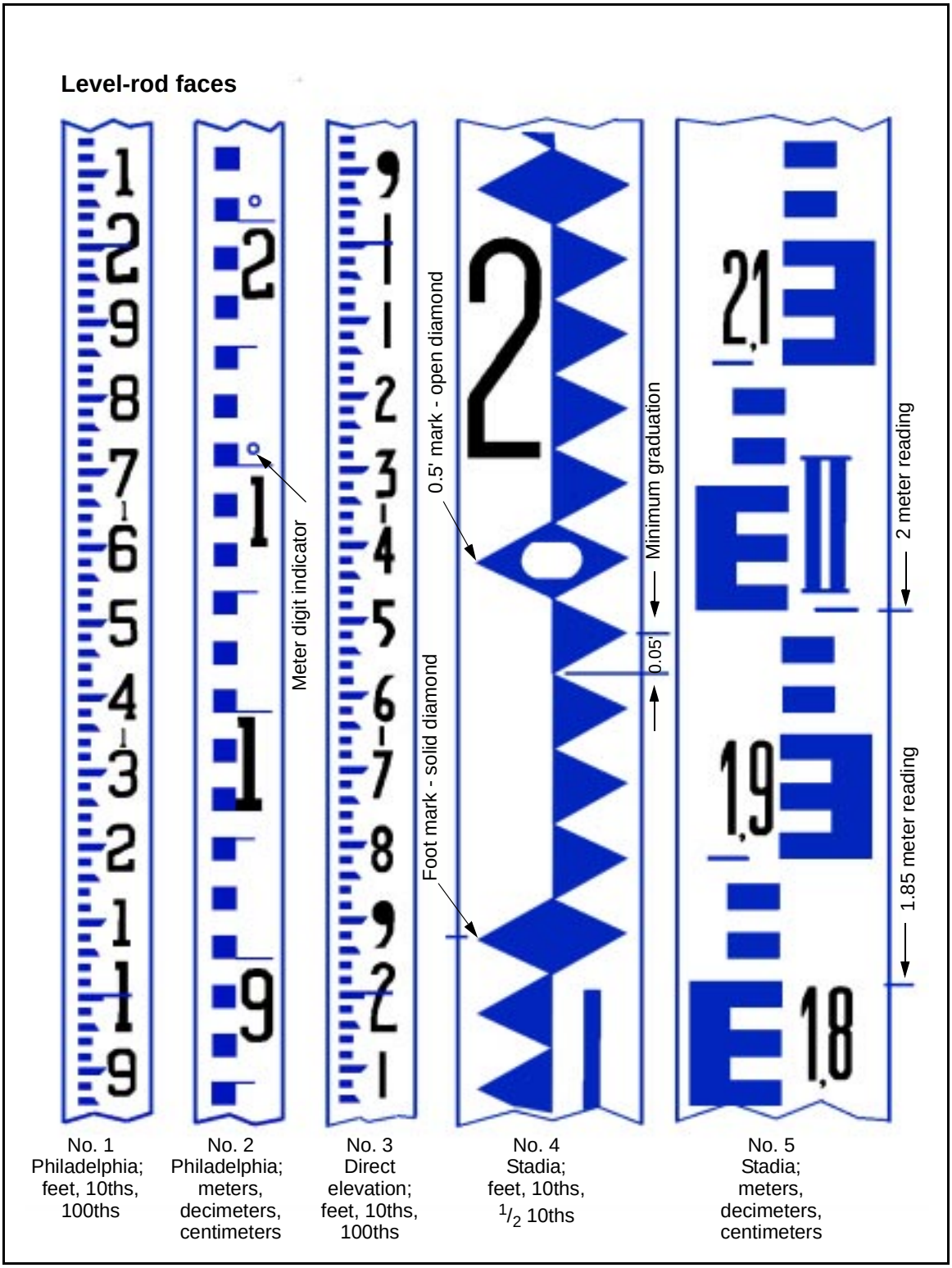

Figure 7-1. Traditional Rectangular Cross-Section Leveling Rods Showing a Variety of Graduation Markings

readings and the measurement is the true DE *(Figure 7-2)*. When the sight distances are unequal and collimation is not true, small errors are accumulated. The numerical value obtained during the C-check gives the correction to the observed DE because of the inequality of sight distances for a single setup or the inequality of the accumulated sight distance for a section of differential leveling. Methods for observing, computing, and adjusting a level are discussed further in Appendix C. Surveyors should follow these procedures:

- Perform a C-check at the beginning of every day that geodetic leveling is performed or when the level is jarred.
- Perform a C-check at midday if the temperature exceeds 95 degrees Fahrenheit (F). Leveling should be avoided during hot temperatures.
- Perform a C-check at about the same time each day. Atmospheric refraction varies during the day and introduces systematic changes to the C-factor.

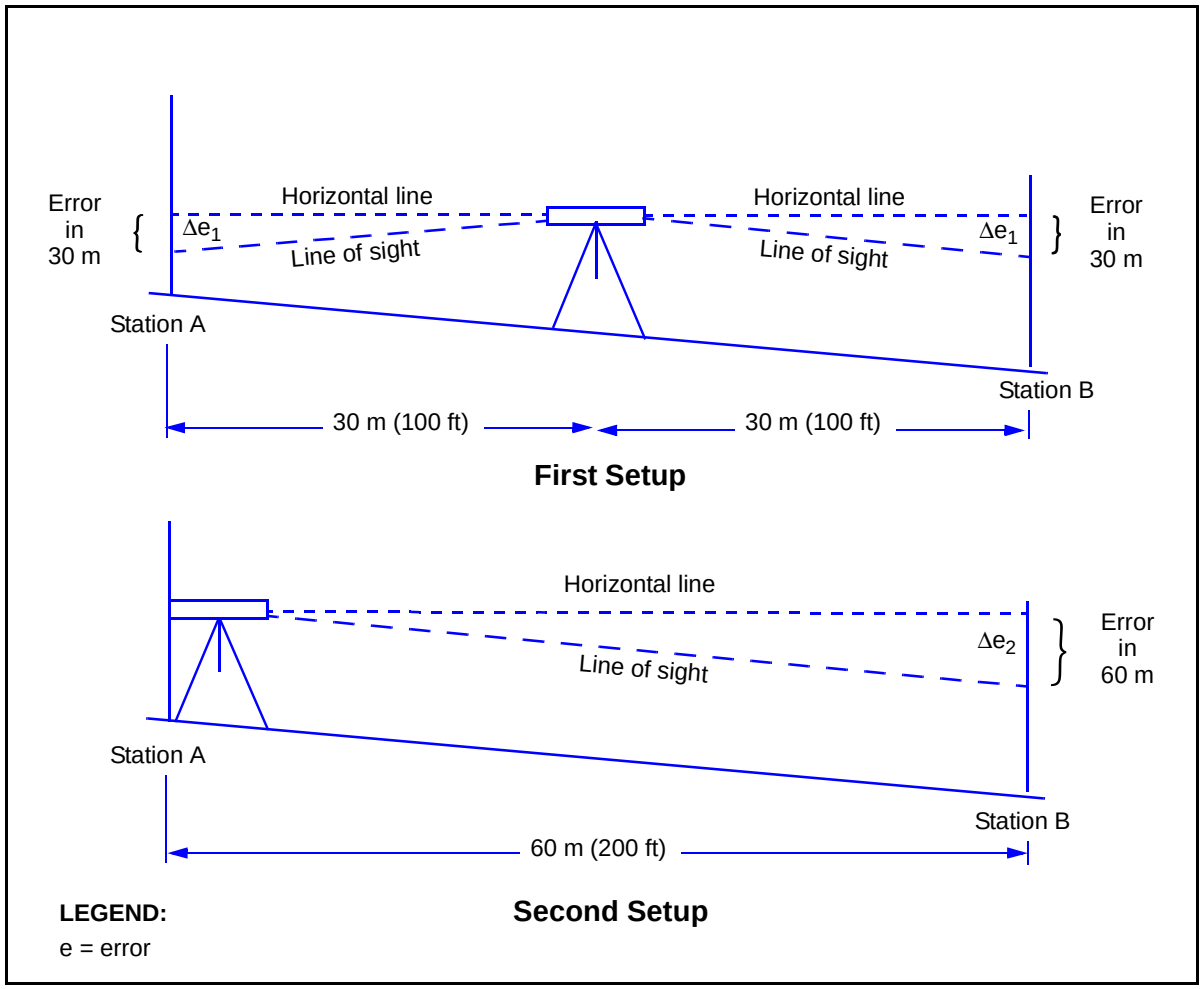

Figure 7-2. Peg Test

SECTION II - PRECISE LEVELING PROCEDURES

7-9. Differential-leveling observations are a repetitive operation, which due to the regimen, often lead to a misunderstanding of the error sources. Due to the number of small systematic errors that are not discernible from geometric checks, it is imperative to adhere to the prescribed procedures.

RECON

7-10. The leveling party performs a recon of the level line. Existing BMs should be recovered and description/recovery notes prepared. BMs along the level line are established according to FGCC standards. At all orders of accuracy, the leveling party will verify that the starting BM elevation is correct by performing two-way leveling to the closest adjacent BM and back. These BMs should be part of the same level-line network that originally established them. All members of the leveling party should exercise caution in the choice of the route for leveling. High-traffic areas should be avoided, and if this is not possible, the leveling party should maintain high visibility at all times. Road-guard vests and additional personnel may be necessary to ensure the leveling party's safety. The ground over which the leveling progresses should be free of characteristics that will introduce anomalous measurements. Ground that radiates high refraction or that is soft or uneven should be bypassed if possible. Any time that high scintillation is observed between the level and the rod, sight distances must be reduced.

DE DETERMINATION

7-11. The terms differential leveling, direct leveling, geodetic leveling, and spirit leveling all describe the same activity—the determination of DEs by direct observation. These terms are used interchangeably in this publication. Follow these steps when performing third-order differential leveling:

Step 1. Determine the C-factor each day (just before leveling begins) and immediately following any instance when the level is subjected to an unusual shock. Record the results of the C-check and keep them in the project records.

Step 2. Start and end the leveling on BMs of third-order accuracy or higher.

Step 3. Use three-wire-leveling methods.

Step 4. Do not make observations closer to the ground than 0.5 meter. Do not make observations on the rod higher than the project specifications require.

Step 5. Leapfrog the rods forward.

Step 6. Observe an even number of setups between the starting and ending BMs.

Step 7. Place the rods in the red-rod-first sequence—rod number 1 or A of a matched pair of rods is marked (the foot of the rod is painted or a flagging is attached to the rod) to distinguish it from the other rod. The marked rod is observed and the readings are recorded first for each setup.

Step 8. Double-run the sections from the first BM out to the next BM and return.

Step 9. Determine the maximum allowable disclosure. It will be the lesser of the following computed values:

- Twelve millimeters times the square root of the shorter-distance run between the BMs in kilometers.
- Twelve millimeters times the square root of the perimeter of the loop (front and back runs combined) in kilometers.

Step 10. Ensure that any action not specified above complies with the specifications set forth by the FGCC.

Step 11. Ensure compliance with steps 1 through 10 at all times unless the customer sets forth specific methodology, standards, or specifications for performing the differential leveling in the request for survey support.

FIELD-PARTY COMPOSITION

7-12. The field party consists of four members—two rodmen, a level observer, and a recorder. The duties of each member are identified as follows:

- **Rodmen.** The rodmen hold the level rod; pace the sight distances between the instrument and the level rod to ensure that the minimum inequalities of the setup and the accumulated sight distances are maintained; hold the rod during readings in a plumb and steady vertical position using the handles of the rod; place the rod in precisely the same position for the backsight as it was for the foresight; carry the rod using the handles (not over the shoulder); and ensure that the rod face, the sole of the rod, and the circular bubble do not contact the ground or receive a sudden shock (the level rod is a precise-survey instrument and must be treated as such).
- **Observer.** The observer performs the observations, is responsible for the care and condition of the instrument and accessories, ensures that the maximum sight distance is not exceeded when moving the level from the last foresight level rod to the next instrument setup, inspects the level tripod to ensure that all parts are secure and adjusted properly, deliberately places the level to provide a stable platform, carefully levels the instrument and reads the appropriate data, and never leaves the geodetic level unattended.
- **Recorder.** The recorder is responsible for all documentation during the survey; completes all note forms properly; ensures that all requirements are satisfied; ensures that calculations and checks are performed without errors and expeditiously and that all technical specifications have been satisfied; and prepares the description of BMs and any supplemental vertical-control points.

DATA RECORDING

7-13. Procedures for recording differential-leveling data are the same for all orders of accuracy. Differential-leveling data (include the names of the rodmen) is recorded on DA Form 5820-R or any other single-sheet recording form authorized by the party chief *(Figure 7-3)*. After recording the raw

observations to three decimal places, use the following rules to determine the mean center-wire reading to four decimal places:

- If the top interval is LARGER than the bottom, ADD the correction factor to the recorded center-wire reading to obtain the mean center-wire value to four decimal places.
- If the top interval is SMALLER than the bottom, SUBTRACT the correction factor from the recorded center-wire reading to obtain the mean center-wire value to four decimal places.

7-14. The maximum permissible interval imbalance for third-order specification is 3 millimeters. *Table 7-1, page 7-8,* shows the correction factors for center-wire leveling.

Three-Wire Leveling
For use of this form, use FM 3-34.331; the proponent agency is TRADOC.

Project	Location	Organization			
Example	Fort Belvoir, Virginia	DMS			
Observer	**Recorder**	**Instrument**	**Sun**	**Wind**	**Weather**
SFC JONES	SGT SMITH	Wild NA2 - 1234	Warm	Windy	Clear

From	To	Date	Time	Line or Net	Page no.	No. of pgs.
D2	BASS	06 October 86	0830 - 0920	Training 1	2	4

Station	Backsight Face of rod	Mean	Back of rod	Interval	Sum of intervals	Foresight Face of rod	Mean	Back of rod	Interval	Sum of intervals	Remarks
D2	1201					2963					
	0850	0850.3		351		2623	2622.3		340		
	0500			350	701	2281			342	682	
	2551	0850.3			701	7867	2622.3			682	
	2657					0899					
	2406	2406.0		251		0638	0637.7		261		
	2155			251	502	0376			262	523	
	9769	3256.3			1203	9780	3260.0			1205	
	3081					1361					
	2779	2779.3		302		1050	105[illegible]0		311		
	2478			301	603	0739			311	622	
	18107	+6035.6			1806	[illegible]	4[illegible]0.0			1827	BASS
		-4310.0								1806	
	BDE =	+1.7256							B distance	3633	
									km	0.3633	
FDE =	-1.7276				AE = 0.012√distance km			F distance	0.3302		
BDE =	+1.7256				AE = ±0.012√0.3302						
								B distance	0.3633		
E C =	-0.0020				AE =	±0.0068					

INST OP INT _____
Ist COMP INT-_____
2nd COMP INT _____

DA Form 5820-R, AUG 89

Sample

Figure 7-3. Example of Survey Notes for Three-Wire Leveling

Table 7-1. Correction Factors for Center-Wire Leveling

Difference in Intervals	Center-Wire Correction Value
0.000	0.0000
0.001	0.0003
0.002	0.0007
0.003	0.0010

C-FACTOR DETERMINATION

7-15. The determination of the C-factor may be performed as a part of leveling or separately. In all cases, the C-factor determination must be recorded separately from other recordings and must comply with all requirements for note keeping. It is desirable to determine the C-factor under the same conditions that the leveling will be performed, including the sight distance, the slope of the ground, and the elevation of the line of sight above the ground.

7-16. Ensure that the circular bubble is carefully centered and that the observed ends of the bubble in the level vial are in coincidence (when applicable) before reading the three wires. If the C-factor is determined during the first setup of the leveling, perform the following steps:

Step 1. Observe and record the foresight readings on the C-factor note sheet after the regular foresight observations are recorded for the level line.

Step 2. Position the rear rodman to about 10 meters behind the level.

Step 3. Observe and record the rear-rod readings on the C-factor note sheet.

Step 4. Move the level to about 10 meters behind the front rod.

Step 5. Observe and record the front-rod readings on the C-factor note sheet.

Step 6. Observe and record the rear-rod readings on the C-factor note sheet.

7-17. The total correction for curvature and refraction (C&R) must be determined for each far-rod reading using the distance from the instrument to the far rod as the argument. Distances equal the product of the sum of the intervals (for a single set of three-wire readings) times the stadia-interval factor (SIF). The two corrections for C&R are algebraically added to the sum of the mean wire readings for the distant rod. The maximum permissible C-factor varies with the SIF. Instruments with a SIF of 1:100 may not have a C-factor of greater than ±0.004. Instruments with a SIF of 1:200 may not have a C-factor of greater than ±0.007. Instruments with a SIF of 1:333 may not have a C-factor of greater than ±0.010. If the C-factor is determined to be greater than what is permitted for the instrument's SIF, the instrument must be adjusted and the C-factor redetermined before performing differential leveling. The notes for the C-factor determination become part of the administrative notes for the leveling operation.

CENTER-WIRE ADJUSTMENT

7-18. If the C-factor exceeds the SIF limits, a correction to the center wire must be made. Determine this correction by multiplying the total rod interval of the last foresight (distant rod) by the computed C-factor. Compute the correction to three places to the right of the decimal point and include the algebraic sign of the C-factor. The correction to the center wire is algebraically added to the last foresight mean wire reading. The result will be the corrected center-wire reading. Compute the corrected center-wire reading to three places to the right of the decimal point.

7-19. Follow the manufacturer's manual to adjust the level until the corrected center-wire reading is observed on the distant rod. Perform a C-check to ensure that the new C-factor is within the acceptable limits.

SIF DETERMINATION

7-20. The SIF is required to compute the length (horizontal distance) from the stadia intervals and to determine the maximum AE for a level line. The SIF must be determined if the reticle (which contains the etched stadia wires) is replaced or changed. The notes from the SIF determination become part of the records that are kept with the level and the project files.

7-21. The SIF determination is made by comparing the stadia intervals that were observed over a course of known distances. Lay out the course on a reasonably level track, roadway, or sidewalk. Place nails or other marks in a straight line of measured distances of 25, 35, 45, 55, 65, and 75 meters. Plumb the optical zero point of the level over the zero marker on the ground and level the instrument. The optical zero point of the level is found in the manufacturer's manual. Read the rod at each of the six points and record the intervals. Compute the half-wire intervals as a check against erroneous readings. Compute the sum of the six interval readings. The SIF is the sum of the measured distances (300 meters total), divided by the sum of the six interval readings.

7-22. To check for errors, compute the SIF for each of the six readings and divide the measured distance by the total interval readings observed for that distance. The average of the six computations will serve as a numerical check. A tendency for the six computed values to creep in one direction indicates an error in plumbing the optical zero point of the level over the zero point on the ground.

Chapter 8

NAVSTAR GPS

This chapter provides a general overview of the NAVSTAR GPS. The NAVSTAR GPS is a passive, satellite-based navigation system that is operated and maintained by DOD. Its primary mission is to provide passive global positioning/navigation for air-, land-, and sea-based strategic and tactical forces.

SECTION I - GPS OVERVIEW

8-1. A GPS receiver is a simple range-measurement device. Distances are measured between the receiver antenna and the satellites, and the position is determined from the intersections of the range vectors. These distances are determined by a GPS receiver, which precisely measures the time it takes a signal to travel from the satellite to the station. This measurement process is similar to that used in conventional-pulsing marine-navigation systems and in phase-comparison EDM land-surveying equipment.

OPERATING AND TRACKING MODES

8-2. There are two, general operating modes from which GPS-derived positions can be obtained—absolute and relative (or differential) positioning. Within each of these two modes, range measurements to the satellites can be performed by tracking either the phase of the satellite's carrier signal or PRN codes that are modulated on the carrier signal. In addition, GPS positioning can be performed with the receiver operating in a static or dynamic (kinematic) environment. This variety of operational options results in a wide range of accuracy levels that can be obtained from the NAVSTAR GPS. Accuracies can range from 100 meters down to less than 1 centimeter. Increasing the accuracy to less than 1 centimeter requires additional observation time and can be achieved in real time. The selection of a particular GPS operating and tracking mode (for example, absolute, differential, code, carrier, static, kinematic, or combinations thereof) depends on the user's application. Topographic surveying typically requires differential positioning using carrier-phase tracking. Absolute modes are rarely used for geodetic surveying except when worldwide reference control is being established.

ABSOLUTE POSITIONING

8-3. Absolute positioning is the most common military and civil application of NAVSTAR GPS for real-time navigation. When operating in this passive,

real-time navigation mode, ranges to NAVSTAR GPS satellites are observed by a single receiver positioned on a point for which a position is desired. This receiver may be positioned to be stationary over a point (static) or in motion (kinematic [such as on a vehicle, aircraft, missile, or backpack]). Two levels of absolute-positioning accuracy may be obtained—SPS and PPS. With specialized GPS receiving equipment, data-processing refinements, and long-term static observations, absolute-positional coordinates can be determined to accuracy levels of less than 1 meter. These applications are usually limited to worldwide geodetic-reference surveys.

8-4. The SPS user is able to achieve real-time, 3D (point-positional) absolute positioning. The SPS is the GPS signal that DOD authorizes to civil users. This level of accuracy is due to the deliberate degradation of the GPS signal by DOD for national security reasons. DOD degradation of the GPS signal is referred to as selective availability (S/A). DOD has also implemented antispoofing (AS), which denies the SPS user the more accurate precision code (P-code).

8-5. Using the PPS requires DOD authorization for a decryption device that is capable of deciphering the encrypted GPS signals. Army topographic surveyors are authorized users; however, actual use of the equipment has security implications. Real-time, 3D absolute-positional accuracies of 16 to 20 meters are attainable through the PPS.

DIFFERENTIAL POSITIONING

8-6. Differential positioning is a process of measuring the differences in coordinates between two receiver points, each of which is simultaneously observing/measuring satellite code ranges and/or carrier phases from the NAVSTAR GPS constellation. This process measures the difference in ranges between the satellites and two or more ground observing points. The range measurement is performed by a phase-difference comparison, using either the carrier or code phase. The basic principle is that the absolute-positioning errors at the two receiver points will be about the same for a given instant. The resultant accuracy of these coordinate differences is at the meter level for code-phase observations and at the centimeter level for carrier-phase tracking. These coordinate differences are usually expressed as 3D baseline vectors, which are comparable to conventional survey azimuth/distance measurements. DGPS positioning can be performed in the static or the kinematic mode.

SYSTEM CONFIGURATION

8-7. The NAVSTAR GPS consists of three distinct segments—the space segment (satellites), the control segment (tracking and monitoring stations), and the user segment (air-, land-, and sea-based receivers).

SPACE SEGMENT

8-8. The space segment consists of all GPS satellites in orbit. The first generation of satellites were Block I or developmental. Several of these satellites are still operational. A full constellation of Block II or production satellites is now in orbit. The full constellation consists of 24 Block II

operational satellites (21 primary with 3 active on-orbit spares). There are four satellites in each of six orbital planes inclined at 55° to the equator. The satellites are at altitudes of 10,898 nautical miles and have 11-hour, 56-minute orbital periods. The three spares are transparent to the user on the ground (the user is not able to tell which are operational satellites and which are spares). A procurement action for Block IIR (replacement) satellites is underway to ensure full system performance through the year 2025.

CONTROL SEGMENT

8-9. The control segment consists of five tracking stations that are located throughout the world (Hawaii, Colorado, Ascension Island, Diego Garcia Island, and Kwajalein Island). The information obtained from tracking the satellites is used in controlling and predicting their orbits. Three of the stations (Ascension, Diego Gracia, and Kwajalein) are used for transmitting information back to the satellites. The master control station is located at Colorado Springs, Colorado. All data from the tracking stations are transmitted to the master control station where they are processed and analyzed. Ephemerides, clock corrections, and other message data are then transmitted back to the three stations that are responsible for subsequent transmittal back to the satellites. The master control station is also responsible for the daily management and control of the GPS satellites and the overall control segment.

USER'S SEGMENT

8-10. The user's segment represents the ground-based receiver units that process the satellite signals and arrive at a user's position. This segment consists of both military and civil activities for an unlimited number of applications in a variety of air-, land-, and sea-based platforms.

BROADCAST FREQUENCIES AND CODES

8-11. Each NAVSTAR satellite transmits signals on two L-band frequencies (designated as L1 and L2). The L1 carrier frequency is 1,575.42 megahertz and has a wavelength of about 19 centimeters. The L2 carrier frequency is 1,227.60 megahertz and has a wavelength of about 24 centimeters. The L1 signal is modulated with a P-code and a coarse-acquisition code (C/A-code). The L2 signal is modulated with a P-code only. Each satellite carries precise atomic clocks to generate the timing information needed for precise positioning. A navigation message is also transmitted on both frequencies. This message contains ephemerides, clock corrections and coefficients, the health and status of satellites, almanacs of all GPS satellites, and other information.

PSEUDORANDOM NOISE

8-12. Modulated C/A- and P-codes are referred to as PRN codes. These PRN codes are actually a sequence of very precise "time marks" that permit the ground receivers to compare and compute the time of transmission between a satellite and a ground station. The range to the satellite can be derived from this transmission time. This is the basis behind GPS range measurements.

C/A-code pulse intervals are about every 300 meters in range. The more accurate P-code pulse intervals are about every 30 meters.

PSEUDORANGES

8-13. A pseudorange is the time delay between the satellite clock and the receiver clock, as determined from C/A- or P-code pulses. This time difference equates to the range measurement but is called a pseudorange since at the time of the measurement, the receiver clock is not synchronized to the satellite clock. In most cases, an absolute real-time, 3D navigational position can be obtained by observing at least four simultaneous pseudoranges.

SPS

8-14. The SPS uses the less precise C/A-code pseudoranges for real-time GPS navigation. Due to deliberate DOD degradation of the C/A-code accuracy, 100 meters in horizontal and 156 meters in vertical accuracy levels result. These accuracy levels are adequate for most civil applications where only approximate real-time navigation is required.

PPS

8-15. The PPS is the fundamental military real-time navigational use of the GPS. Pseudoranges are obtained using the higher pulse rate (higher accuracy) P-code on both frequencies (L1 and L2). Real-time, 3D accuracies at the 16-meter level can be achieved with the PPS. The P-code is encrypted to prevent unauthorized civil or foreign use. This encryption requires a special decryption code to obtain this 16-meter accuracy.

CARRIER-PHASE MEASUREMENTS

8-16. Carrier-frequency tracking measures the phase differences between the Doppler-shifted satellite and receiver frequencies. The phase differences are continuously changing due to the changing satellite earth-orbit geometry. However, such effects are resolved in the receiver and subsequent data postprocessing. When carrier-phase measurements are observed and compared between two stations (differential mode), 3D baseline-vector accuracy (below the centimeter level) between the stations is attainable. New receiver technology and processing techniques have allowed for carrier-phase measurements to be used in real-time centimeter positioning.

BROADCAST EPHEMERIS DATA

8-17. Each NAVSTAR GPS satellite periodically broadcasts data concerning clock corrections, system/satellite status and, most critically, its position or ephemeris data. There are two basic types of ephemeris data—broadcast and precise.

BROADCAST EPHEMERIDES

8-18. Broadcast ephemerides are predicted satellite positions that are broadcast within the navigation message, which is transmitted from the satellites in real time. The ephemerides can be acquired in real time by a

receiver that is capable of acquiring either the C/A- or P-code. The broadcast ephemerides are computed by using the past tracking data of the satellites. The satellites are tracked continuously by the monitor stations to obtain more recent data to use for orbit predictions. The data are analyzed by the master control station, and new parameters for the satellite orbits are transmitted back to the satellites. This upload is performed daily and the newly predicted orbital elements are transmitted every hour by the navigational message. Broadcast ephemerides are adequate to obtain needed accuracies for most survey applications.

PRECISE EPHEMERIDES

8-19. Precise ephemerides are based on actual tracking data that are postprocessed to obtain more accurate satellite positions. These ephemerides are delayed for processing but are more accurate than the broadcast ephemerides because they are based on actual tracking data and not predicted data. Civilian users can obtain this information from the NGS or private sources that maintain their own tracking networks and provide the information for a fee.

SECTION II - ABSOLUTE POSITIONING

8-20. Absolute positioning involves the use of only one passive receiver at one station location to collect data from multiple satellites to determine the station's location. It is not sufficiently accurate for precise surveying and positioning uses. However, it is the most widely used GPS-positioning method for real-time navigation and location.

ABSOLUTE-POSITIONING ACCURACIES

8-21. Absolute-positioning accuracies are dependent on the user's authorization. The SPS user can obtain real-time, 3D accuracies of 100 meters. The lower level of accuracies achievable using the SPS is due to the intentional degradation of the GPS signal by DOD S/A. The PPS user (usually a DOD-approved user) can use a decryption device to achieve a 3D accuracy in the range of 10 to 16 meters with a single-frequency receiver. Accuracy to less than 1 meter can be obtained from absolute GPS measurements when special equipment and postprocessing techniques are employed.

8-22. By using broadcast ephemerides, the user is able to use pseudorange values in real time to determine absolute-point positions with an accuracy of between 3 meters in the best of conditions and 80 meters in the worst of conditions. By using postprocessed (precise) ephemerides, the user can expect absolute point positions with an accuracy of near 1 meter in the best of conditions and 40 meters in the worst of conditions.

PSEUDORANGING

8-23. When a GPS user performs a GPS navigational solution, only an approximate range (or pseudorange) to selected satellites is measured. In

order to determine the user's precise GPS location, the known range to the satellite and the position of those satellites must be known. By pseudoranging, the GPS user measures an approximate distance between the antenna and the satellite without any corrections for errors in synchronization between the clock of the transmitter and the clock of the receiver. This measurement correlates by correlation of a satellite-transmitted code and a reference code that is created by the receiver. The distance the signal has traveled is equal to the velocity of the transmission of the satellite multiplied by the elapsed time of transmission. The satellite-signal velocity changes that are due to tropospheric and ionospheric conditions must be considered.

8-24. The accuracy of the positioned point is a function of the range-measurement accuracy and the geometry of the satellites (reduced to spherical intersections with the earth's surface). A description of the geometrical magnification of uncertainty in a GPS-determined point position is the dilution of precision (DOP). Repeated and redundant range observations will generally improve range accuracy. However, the DOP remains the same. In a static mode (the GPS antenna stays stationary), range measurements to each satellite can be continuously remeasured over varying orbital locations of the satellite(s). The varying satellite orbits cause varying positional intersection geometry. In addition, simultaneous range observations to numerous satellites can be adjusted using weighting procedures that are based on the elevation and the pseudorange-measurement reliability.

8-25. Four pseudorange observations are needed to resolve a GPS 3D position. Three pseudorange observations are needed for a two-dimensional (2D) (horizontal) location. There are often more than four pseudorange observations due to the need to resolve the clock biases contained in both the satellite and the ground-based receiver. In computing the X, Y, and Z coordinates of a point, a fourth unknown parameter (clock bias) must also be included in the solution.

ABSOLUTE-POSITIONING ERROR SOURCES

8-26. There are numerous sources of measurement errors that influence GPS performance. The sum of all systematic errors or biases contributing to the measurement error is referred to as a range bias. The observed GPS range (without removal of biases) is referred to as a biased range or pseudorange. Principal contributors to the final range error that also contribute to overall GPS error are ephemeris error, satellite-clock and electronics inaccuracies, tropospheric and ionospheric refraction, atmospheric absorption, receiver noise, and multipath effects. Other errors include those induced by DOD S/A and AS. In addition to these major errors, the GPS also contains random observation errors (such as unexplainable and unpredictable time variation). These errors are impossible to model and correct. The following paragraphs discuss errors associated with absolute GPS-positioning modes. Many of these errors are either eliminated or significantly minimized when the GPS is used in a differential mode, because the same errors are common to both receivers during simultaneous observing sessions.

EPHEMERIS ERRORS AND ORBIT PERTURBATIONS

8-27. Satellite-ephemeris errors are errors in the prediction of a satellite's position, which may then be transmitted to the user in the satellite data message. Ephemeris errors are satellite dependent and are very difficult to correct completely and compensate for, because the forces acting on the predicted orbit of a satellite are difficult to measure directly. The previously stated accuracy levels are subject to the equipment's condition and performance. Ephemeris errors produce equal error shifts in the calculated absolute-point positions.

CLOCK STABILITY

8-28. The GPS relies very heavily on accurate time measurements. GPS satellites carry rubidium and cesium time standards that are usually accurate to 1 part in 10 trillion and 1 part in 100 trillion, respectively, while most receiver clocks are actuated by a quartz standard accurate to 1 part in 100 million. A time offset is the difference between the time as recorded by the satellite clock and the time recorded by the receiver. A range error that is observed by the user as a result of time offsets between the satellite and receiver clock is a linear relationship and can be approximated.

8-29. Unpredictable transient situations that produce high-order departures in clock time can be stored for short periods of time. In a plane survey, departure is defined as the difference between the castings of the two ends of the line, which may be either plus or minus. Predictable time drift of the satellite clocks is closely monitored by ground-control stations. Through close monitoring of the time drift, the ground-control stations are able to determine second-order polynomials that accurately model the time drift. These second-order polynomials, determined to model the time drift, are included in the broadcast message in an effort to keep this drift to within 1 millisecond. The time synchronization between the GPS satellite clocks is kept to within 20 nanoseconds through the broadcast-clock corrections as determined by the ground-control stations and the synchronization of GPS standard time to the universal time, coordinated (UTC) to within 100 nanoseconds. Random time drifts are unpredictable, thereby making them impossible to model.

8-30. GPS receiver-clock errors can be modeled in a manner similar to GPS-satellite-clock errors. In addition to modeling the satellite-clock errors and in an effort to remove them, an additional satellite should be observed during operation to solve for an extra clock offset parameter along with the required coordinate parameters. This procedure is based on the assumption that the clock bias is independent at each measurement epoch. Rigorous estimation of the clock terms is more important for point positioning than for differential positioning. Many of the clock terms cancel each other when the position equations are formed from observations during a differential-survey session.

IONOSPHERIC DELAYS

8-31. GPS signals are electromagnetic signals and as such are nonlinearly dispersed and refracted when transmitted through a highly charged environment like the ionosphere. Dispersion and refraction of the GPS signal are referred to as ionospheric range effects, because dispersion and refraction

of the signal result in an error in the GPS range value. Ionospheric range effects are frequency dependent.

8-32. The error effect of ionosphere refraction on GPS range values is dependent on sunspot activity, the time of day, and satellite geometry. GPS operations conducted during periods of high sunspot activity or with satellites near the horizon produce range results with the most amount of ionospheric error. GPS operations conducted during periods of low sunspot activity, during the night, or with a satellite near the zenith will produce range results with the least amount of ionospheric error.

8-33. Resolution of ionospheric refraction can be accomplished by using a dual-frequency receiver (a receiver that can simultaneously record both L1 and L2 frequency measurements). During a period of uninterrupted observation of the L1 and L2 signals, these signals can be continuously counted and differenced. The resultant difference shows the variable effects of the ionosphere delay on the GPS signal. Single-frequency receivers used to determine an absolute or differential position typically rely on ionospheric models that predict the effects of the ionosphere. Recent efforts have shown that significant ionospheric-delay removal can be achieved using single-frequency receivers.

TROPOSPHERIC DELAYS

8-34. GPS signals in the L-band level are refracted and not dispersed by the troposphere. Tropospheric conditions that cause refraction of the GPS signal can be modeled by measuring the dry and wet components.

MULTIPATH EFFECTS

8-35. Multipath describes an error that affects positioning and occurs when the signal arrives at the receiver from more than one path. Multipath normally occurs near large reflective surfaces, such as a building or structure with a reflective surface, a chain-link fence, or antenna arrays. Multipath is caused by the reflection of the GPS signal off of a nearby object, which produces a false signal at the GPS antenna. GPS signals received as a result of multipath give inaccurate GPS positions when processed. Newer receiver and antenna designs and thorough mission planning can minimize multipath effects as an error source. The averaging of GPS signals over a period of time can also reduce multipath effects.

RECEIVER NOISE

8-36. Receiver noise includes a variety of errors associated with the ability of the GPS receiver to measure a finite time difference. These errors include signal processing, clock/signal synchronization and correlation procedures, receiver resolution, and signal noise.

S/A AND AS

8-37. S/A purposely degrades the satellite signal to create position errors by dithering the satellite clock and offsetting the satellite orbits. The effects of S/A can be eliminated by using differential techniques. AS is implemented by interchanging the P-code with a classified, encrypted P-code called a Y-code.

This denies users who do not possess an authorized decryption device. Manufacturers of civil GPS equipment have developed techniques, such as squaring or cross correlation, to make use of the P-code when it is encrypted.

USER EQUIVALENT RANGE ERROR

8-38. The previously described error sources or biases are principal contributors to the overall GPS range error. This total error budget is often summarized as the user equivalent range error (UERE). As mentioned previously, errors can be removed or at least effectively suppressed by developing models of their functional relationships in terms of various parameters that can be used as a corrective supplement for the basic GPS information. Differential techniques also eliminate many of these errors. *Table 8-1* lists significant sources for errors and biases and correlates them to the segment source.

Table 8-1. GPS Range-Measurement Accuracy

Segment Source	Error Source	Absolute Positioning		Differential Positioning (P-code) (m)
		C/A-code Pseudorange (m)	P-code Pseudorange (m)	
Space	Clock stability	3.0	3.0	Negligible
	Orbit perturbations	1.0	1.0	Negligible
	Other	0.5	0.5	Negligible
Control	Ephemeris predictions	4.2	4.2	Negligible
	Other	0.9	0.9	Negligible
User	Ionosphere	3.5	2.3	Negligible
	Troposphere	2.0	2.0	Negligible
	Receiver noise	1.5	1.5	1.5
	Multipath	1.2	1.2	1.2
	Other	0.5	0.5	0.5
1σ UERE		±12.1	±6.5	±2.0

ACCURACIES

8-39. The absolute value of range accuracies obtainable from the GPS are largely dependent on which code (C/A or P) is used to determine positions. These range accuracies (for example, UERE), when coupled with the geometrical relationships of the satellites during the position determination (for example, DOP), result in a 3D ellipsoid that depicts uncertainties in all three coordinates. Given the changing satellite geometry and other factors,

GPS accuracy is time/location dependent. Error propagation techniques are used to define nominal accuracy statistics for a GPS user.

DOP

8-40. The final positional accuracy of a point (determined by using absolute GPS-S techniques) is directly related to the geometric strength of the configuration of satellites observed during the survey session. GPS errors resulting from satellite-constellation geometry can be expressed in terms of DOP. In mathematical terms, DOP is a scalar quantity used in an expression of a ratio of the positioning accuracy. It is the ratio of the standard deviation of one coordinate to the measurement accuracy. DOP represents the geometrical contribution of a certain scalar factor to the uncertainty (for example, standard deviation) of a GPS measurement. DOP values are a function of the diagonal elements of the covariance matrices of the adjusted parameters for the observed GPS signal. DOP values are used in point formulations and determinations. DOP is a scalar quantity of the contribution of the configuration of satellite-constellation geometry to the GPS accuracy. DOP can also be a measure of the strength of the satellite-constellation geometry. The more satellites that can be observed and used in the final solution, the better the solution. Since DOP can be used as a measure of geometrical strength, it can also be used to selectively choose four satellites in a particular constellation that will provide the best solution.

Geometric DOP

8-41. The main form of DOP used in absolute GPS positioning is the geometric DOP (GDOP). GDOP is a measure of accuracy in a 3D position and time. The final positional accuracy equals the actual range error multiplied by the GDOP.

Positional DOP

8-42. Positional DOP (PDOP) is a measure of the accuracy in 3D position. The PDOP values are generally developed from satellite ephemerides before conducting a survey. When developed before a survey, PDOP can be used to determine the adequacy of a particular survey schedule. This is valid for rapid-static or kinematic surveys but is less valid for a long-duration static survey.

8-43. PDOP represents position recovery at an instant in time and is not representative of a whole session of time. A PDOP error is generally given in units of meters of error per 1-meter error in a pseudorange measurement. When using pseudorange techniques, PDOP values in the range of 4 to 5 meters of error per 1-meter error are considered very good, while PDOP values greater than 10 meters of error per 1-meter error are considered very poor. For static surveys, it is generally desirable to obtain GPS observations during a time of rapidly changing GDOP or PDOP.

8-44. When the values of PDOP or GDOP are viewed over time, peak or high values (greater than 10 meters of error per 1-meter error) can be associated with satellites in a constellation of poor geometry. The higher the PDOP or GDOP, the poorer the solution for that instant in time. This is critical in

determining the acceptability of real-time navigation and photogrammetric solutions. Poor geometry can be the result of satellites orbiting near each other or being in the same plane or at similar elevations.

Horizontal DOP

8-45. Horizontal DOP (HDOP) is a measurement of the accuracy in a 2D horizontal position. The HDOP statistic is most important in evaluating GPS-Ss intended for horizontal control. HDOP is the RMS error determined from the final variance-covariance matrix divided by the standard error of the range measurements. HDOP roughly indicates the effects of satellite-range geometry on a resultant position.

Vertical DOP

8-46. Vertical DOP (VDOP) is a measurement of the accuracy in the standard deviation of a vertical height. *Table 8-2* indicates generally accepted DOP values for a baseline solution.

Table 8-2. Acceptable DOP Values

Measurement	DOP Value	Comment
GDOP and PDOP	Less than 10 meters of error per 1-meter error (optimally 4 to 5 meters of error per 1-meter error)	In static GPS surveying, it is desirable to have a GDOP/PDOP that changes during the time of the GPS-S session. The lower the GDOP/PDOP, the better the instantaneous point-position solution.
HDOP and VDOP	2 meters of error per 1-meter error	This DOP value results in the best constellation of four satellites.

ACCURACY COMPARISONS

8-47. It is important that GPS-accuracy measures clearly identify the statistic from which they were derived. A 100-meter or positional variance-covariance matrix is meaningless unless it is identified as being either one dimensional (1D), 2D, or 3D, along with the applicable probability level. For example, a PPS 16-meter 3-deviation accuracy is, by definition, a spherical error probable (SEP) (50 percent). This 16-meter SEP equates to a 28-meter 3D, 95 percent confidence spheroid. If transformed to 2D accuracy, the SEP equates roughly to a 10-meter circular error probable (CEP), a 12-meter root-mean-square (RMS), a 2-meter 2-deviation RMS, or a 36-meter 3-deviation RMS. *Table 8-3* shows additional information on GPS-measurement statistics. In addition, absolute GPS point-positioning accuracies are defined relative to an earth-centered coordinate system/datum. This coordinate system will differ significantly from local or construction datums. Nominal GPS accuracies may also be published as design or tolerance limits, and accuracies achieved can differ significantly from these values.

Table 8-3. Representative GPS Error-Measurement Statistics for Absolute-Point Positioning

Error-Measure Statistic	Probability %	Relative Distance (ft)[1]	GPS Precise-Positioning Service (m)[2]		GPS Standard-Positioning Service (m)[2]	
1D Measures			σ_N or σ_E	σ_U	σ_N or σ_E	σ_U
Probable error	50.00	0.6745 σ	±4.0	±9.0	±24.0	±53.0
Average error	57.51	0.7979 σ	±5.0	±11.0	±28.0	±62.0
1σ standard error/deviation[3]	68.27	1.0000 σ	±6.3	±13.8	±35.3	±78.0
90% probability (map accuracy standard)	90.00	1.6450 σ	±10.0	±23.0	±58.0	±128.0
95% probability/confidence	95.00	1.9600 σ	±12.0	±27.0	±69.0	±153.0
2σ standard error/deviation	95.45	2.0000 σ	***±12.6***	***±27.7***	***±70.7***	***±156.0***
99% probability/confidence	99.00	2.5760 σ	±16.0	±36.0	±91.0	±201.0
3σ standard error (near certainty)	99.73	3.0000 σ	±19.0	±42.0	±106.0	±234.0
2D Measures[4]			**Circular Radius**		**Circular Radius**	
1σ standard error circle[5]	39.00	1.0000 σ_c	6.0		35.0	
CEP[6]	50.00	1.1770 σ_c	7.0		42.0	
1-deviation RMS (1DRMS)[3, 7]	63.00	1.4140 σ_c	9.0		50.0	
Circular map accuracy standard	90.00	2.1460 σ_c	13.0		76.0	
95% 2D positional confidence circle	95.00	2.4470 σ_c	15.0		86.0	
2-deviation RMS (2DRMS)[8]	98.00	2.8300 σ_c	***17.8***		***100.0***	
99% 2D positional confidence circle	99.00	3.0350 σ_c	19.0		107.0	
3.5σ circular near-certainty error	99.78	3.5000 σ_c	22.0		123.0	
3-deviation RMS (3DRMS)	99.90	4.2400 σ_c	27.0		150.0	
3D Measures			**Spherical Radius**		**Spherical Radius**	
1σ spherical standard error[9]	19.90	1.0000 σ_s	9.0		50.0	
SEP[10]	50.00	1.5400 σ_s	13.5		76.2	
Mean radial spherical error (MRSE)[11]	61.00	1.7300 σ_s	16.0		93.0	
90% spherical accuracy standard	90.00	2.5000 σ_s	22.0		124.0	
95% 3D confidence spheroid	95.00	2.7000 σ_s	24.0		134.0	
99% 3D confidence spheroid	99.00	3.3700 σ_s	30.0		167.0	
Spherical near-certainty error	99.89	4.0000 σ_s	35.0		198.0	

Table 8-3. Representative GPS Error-Measurement Statistics for Absolute-Point Positioning (continued)

Error-Measure Statistic	Probability %	Relative Distance (ft)[1]	GPS Precise-Positioning Service (m)[2]	GPS Standard-Positioning Service (m)[2]

[1]Valid for 2- and 3-deviation only if $\sigma_N = \sigma_E = \sigma_U$. ($\sigma_{minimum}/\sigma_{maximum}$) generally must be ≥0.2. Relative distance used unless otherwise indicated.
[2]Representative accuracy based on 1990 Federal Radio Navigation Plan (FRNP) simulations for PPS and SPS (FRNP estimates shown in bold italics) and that $\sigma_N \approx \sigma_E$. SPS may have significant short-term variations from these nominal values.
[3]Statistic used to define USACE hydrographic survey depth and positioning criteria.
[4]The 1990 FRNP also proposes SPS maintain, at minimum, a 2D confidence of 300 meters @ 99.99 percent probability.
[5]$\sigma_C = 0.5\ (\sigma_N + \sigma_E)$—approximates standard error ellipse.
[6]CEP $= 0.589\ (\sigma_N + \sigma_E) \approx 1.18\ \sigma_C$.
[7]1DRMS $= (\sigma_N^2 + \sigma_E^2)^{1/2}$.
[8]2DRMS $= 2\ (\sigma_N^2 + \sigma_E^2)^{1/2}$.
[9]$\sigma_S = 0.333\ (\sigma_N + \sigma_E + \sigma_U)$.
[10]SEP $= 0.513\ (\sigma_N + \sigma_E + \sigma_U)$.
[11]MRSE $= (\sigma_N^2 + \sigma_E^2 + \sigma_U^2)^{1/2}$.

LEGEND:

σ_c = approximate standard error ellipse

σ_s = nominal standard error

NOTES:

1. Most commonly used statistics are shown in bold-face type.
2. Estimates are not applicable to differential GPS positioning. Circular/spherical error radii do not have ± signs.
3. Absolute positional accuracies are derived from GPS-simulated user range errors/deviations and the resultant geocentric-coordinate solution (X-Y-Z) covariance matrix, as transformed to a local datum (N-E-U or Φ-λ-h). GPS accuracy will vary with GDOP and other numerous factors at time(s) of observation. The 3D covariance matrix yields an error ellipsoid. Transformed ellipsoidal dimensions given (for example, σ_N, σ_E, or σ_U) are only average values observed under nominal GDOP conditions. Circular (2D) and spherical (3D) radial measures are only approximations to this ellipsoid, as are probability estimates.

ROOT-MEAN-SQUARE ERROR MEASURES

8-48. Two-dimensional GPS positional accuracies are normally estimated using a RMS radial-error statistic. A 1-sigma (sigma is denoted by σ) RMS error equates to the radius of a circle with a 63 percent probability that the position is within the circle. A circle of twice this radius (2σ) represents about a 97 percent probability. This 97 percent probability circle, or 2σ RMS, is the most common positional-accuracy statistic used in GPS surveying. In some instances, a 3σ RMS (99 or more percent probability) is used. This RMS error statistic is also related to the positional variance-covariance matrix. An RMS error statistic represents the radius of a circle and, therefore, is not preceded by a ± sign.

PROBABLE ERROR MEASURES

8-49. Three-dimensional GPS-accuracy measurements are commonly expressed by SEP. The SEP represents the radius of a sphere with a 50 percent confidence or probability level. This spheroid radial measure only approximates the actual 3D ellipsoid representing the uncertainties in the

geocentric coordinate system. In 2D horizontal positioning, a CEP statistic is commonly used, particularly in military targeting. The CEP represents the radius of a circle containing a 50 percent probability of position confidence.

SECTION III - DIFFERENTIAL PRECISE POSITIONING

8-50. Absolute positioning does not provide the accuracies needed for most survey-control projects due to existing and induced errors. To eliminate the errors and obtain higher accuracies, the GPS can be used in a differential-positioning mode. The terms “relative” and “differential” used throughout this manual have similar meaning. Relative is used when discussing one thing in relation to another. Differential is used when discussing the method of positioning one thing in relation to another. Differential positioning requires that at least two receivers be set up at two stations (usually one is known) to collect satellite data simultaneously to determine coordinate differences. This method positions the two stations relative to each other (hence the term relative positioning) and can provide the accuracies required for basic land surveying.

CODE-PSEUDORANGE TRACKING

8-51. Differential positioning (using code pseudoranges) is performed similarly to code-pseudorange tracking for absolute positioning. Code-pseudorange tracking effectively eliminates or minimizes some of the major uncertainties. This pseudorange process results in the absolute coordinates of the user on the earth’s surface. Errors in range are directly reflected in resultant coordinate errors. Differential positioning is not as concerned with the absolute position of the user as with the relative difference between two user positions, which are simultaneously observing the same satellites. Since errors in the satellite position and atmospheric-delay estimates are effectively the same at both receiving stations, the errors cancel each other to a large extent.

8-52. For example, if the true pseudorange distance from a known control point to a satellite is 100 meters and the observed or measured pseudorange distance is 92 meters, then the pseudorange error or correction is 8 meters for that particular satellite. A pseudorange correction (PRC) can be generated for each satellite being observed. If a second receiver is observing at least four of the same satellites and is within a reasonable distance, it can use these PRCs to obtain a relative position to the known control point since the errors will be similar. Thus, the relative distance (coordinate difference) between the two stations is reasonably accurate regardless of poor absolute coordinates. In effect, the GPS-observed baseline vectors are no different from azimuth/distance observations. As with a total station, any type of initial-coordinate reference can be input to start the survey.

8-53. The GPS coordinates will not coincide with the user’s local-project datum coordinates. Since differential-survey methods are concerned only with relative coordinate differences, disparities with the global reference system used by the NAVSTAR GPS are not significant for topographic purposes. Therefore, GPS coordinate differences can be applied to any type of local-project reference datum (for example, NAD 27 or NAD 83).

CARRIER-PHASE TRACKING

8-54. Differential positioning (using carrier phases) uses a formulation of pseudoranges. The process becomes more complex when the carrier signals are tracked so that range changes are measured by phase resolution. In carrier-phase tracking, an ambiguity factor is added, which must be resolved to obtain a derived range. Carrier-phase tracking provides for a more accurate range resolution due to the short wavelength (about 19 centimeters for L1 and 24 centimeters for L2) and the ability of a receiver to resolve the carrier phase down to about 2 millimeters. This technique has primary application to engineering, topographic, and geodetic surveying and may be employed with either static or kinematic surveys. There are several techniques that use the carrier phase to determine a station's position. These include static, rapid-static, kinematic, stop-and-go kinematic, pseudokinematic, and on-the-fly (OTF) kinematic/RTK. *Table 8-4* lists these techniques and their required components, applications, and accuracies.

Table 8-4. Carrier-Phase Tracking

Technique	Requirements	Applications	Accuracy
Static (postprocessing)	L1 or L1/L2 GPS receiver 386/486 computer for postprocessing 45-minute to 1-hour minimum observation time[1]	Control surveys (high-accuracy)	Subcentimeter level
Rapid static (postprocessing)	L1/L2 GPS receiver 5- to 20-minute observation time[1]	Control surveys (medium- to high-accuracy)	Subcentimeter level
Kinematic[2] (postprocessing)	L1 GPS receiver with kinematic survey option 386/486 PC for postprocessing	Continuous topographic surveys Location surveys	Centimeter level
Stop-and-go kinematic[2] (postprocessing)	L1 GPS receiver 386/486 PC for postprocessing	Control surveys (medium-accuracy)	Centimeter level
Pseudokinematic[2] (postprocessing)	L1 GPS receiver 386/486 computer for postprocessing	Control surveys (medium-accuracy)	Centimeter level
OTF/RTK kinematic[3] (real-time or postprocessing)	Real-time processing: Internal or external processor (a PC with dual communication ports) Minimum 4800 baud radio/modem data-link set Postprocessing: L1/L2 GPS receiver 386/486 PC	Hydro surveys (real-time, high-accuracy) Location surveys Control surveys (medium-accuracy) Photo control surveys Continuous topographic surveys	Subdecimeter level

[1]Dependent on the satellite constellation and the number of satellites in view.
[2]An initialization period is required, and loss of satellite lock is not tolerated.
[3]No static initialization is necessary, integers are gained while moving, and loss of satellite lock is tolerated.

STATIC

8-55. Static surveying is the most widely used differential technique for control and geodetic surveying. It involves long observation times (1 to 2 hours, depending on the number of visible satellites) to resolve the integer ambiguities between the satellite and the receiver. Accuracies of less than a centimeter can be obtained from this technique.

RAPID STATIC

8-56. Rapid-static surveying measures baselines and determines positions in the centimeter level with a short observation time (5 to 20 minutes). The observation time is dependent on the length of the baseline and the number of visible satellites. When moving from one station to the next, loss of satellite lock (also referred to as loss of lock) can occur since each baseline is processed independently.

KINEMATIC

8-57. Kinematic surveying allows the user to rapidly and accurately measure baselines, while moving from one point to the next. The data are collected and postprocessed to obtain accurate positions to the centimeter level. This technique permits only partial loss of lock during observation and requires a brief period of static initialization. The OTF technology, both real-time and postprocessed, could eventually replace standard kinematic procedures for short baselines.

STOP-AND-GO KINEMATIC

8-58. Stop-and-go kinematic surveying involves collecting data for a few minutes (1 to 2 minutes) at each station (after a period of initialization) to gain the integers. This technique does not allow for loss of lock during the survey. If loss of lock occurs, a new period of initialization must take place. This technique can be performed with two fixed or known stations to provide redundancy and improve accuracy.

PSEUDOKINEMATIC

8-59. Pseudokinematic surveying is similar to standard kinematic and static procedures combined. The differences are no static initialization, a longer period of time at each point (about 1 to 5 minutes) (each point must be revisited after about one hour), and loss of lock is acceptable. Pseudokinematic surveying is less acceptable for establishing baselines, because the positional accuracy is less than that for kinematic or rapid-static surveying.

OTF/RTK

8-60. OTF/RTK kinematic surveying uses GPS technology to allow positioning to less than a decimeter in real time. This technique determines the integer number of carrier wavelengths from the GPS antenna to the GPS satellite, transmitting them while in motion and without static initialization. The basic concept behind OTF/RTK kinematic surveying is kinematic surveying without static initialization (integer initialization is performed while moving) and allowances for loss of lock. Other GPS techniques that can

achieve this kind of accuracy require static initialization while the user is not moving and do not allow for loss of lock while in motion.

VERTICAL MEASUREMENTS

8-61. The GPS is not recommended for third-order or higher vertical-control surveys or as a substitute for standard differential leveling. It is practical for small-scale topographic mapping or similar projects.

ELEVATION DETERMINATION

8-62. The height component of GPS measurements is the weakest plane because of the orbital geometry of the X, Y, and Z position determination. Thus, GPS-ellipsoidal height differences are usually less accurate than the horizontal components. GPS-derived elevation differences do not meet third-order standards (as obtained by using conventional levels) and must be used with caution.

TOPOGRAPHIC MAPPING

8-63. GPS positioning, whether in the absolute or differential positioning mode, can provide heights (or height differences) of surveyed points. The height or height difference obtained from the GPS is in terms of height above or below the WGS-84 ellipsoid. Ellipsoid heights are not the same as orthometric heights or elevations. Orthometric heights or elevations are obtained from conventional differential leveling. This distinction between ellipsoid heights and orthometric elevations is critical to many engineering and construction projects. GPS users must exercise extreme caution in applying GPS height determinations to projects that are based on orthometric elevations.

8-64. The GPS uses WGS 84 as the optimal mathematical model best describing the shape of the true earth at sea level, based on an ellipsoid of revolution. The WGS-84 ellipsoid adheres very well to the shape of the earth in terms of horizontal coordinates but differs somewhat with the established MSL definition of orthometric height. The difference between ellipsoidal height (as derived by the GPS) and conventional leveled (orthometric) heights is required over an entire project area to adjust GPS heights to orthometric elevations. The NGS has developed geoid modeling software (for example, GEOID93, GEOID96, and GEOID99) to be used to convert ellipsoidal heights to approximate orthometric elevations. These converted elevation values should be used with extreme caution because they are easy to mess up.

8-65. Static- or kinematic-GPS-S techniques can be used effectively on a regional basis for the densification of low-accuracy vertical control for topographic mapping. Existing BM data (orthometric heights) and corresponding GPS-derived ellipsoidal values for at least three stations in a small project area can be used in tandem in a minimally constrained adjustment program to reasonably model the geoid. More than three correlated stations are required for larger areas to ensure proper modeling from the BM data. Corresponding GPS data can then be used to derive the unknown orthometric heights of the remaining stations that were occupied during the GPS-observation period.

GEOID HEIGHTS

8-66. The impact of the GPS on geodetic-control surveys has been immense. In the past, surveyors relied on line-of-sight instrumentation to develop coordinates. With the GPS, ground-station intervisibility is no longer required, and much longer lines can be surveyed. Different instruments and survey methods were used to measure horizontal and vertical coordinates, leading to two different networks with little overlap. The GPS, on the other hand, is a 3D system.

8-67. The heights obtained from the GPS are in a different height system than those historically obtained with geodetic leveling. GPS data can be readily processed to obtain *ellipsoidal heights*. This is the height above or below a simple ellipsoid model of the earth. Geodetic leveling takes into consideration a height called *orthometric height* (often known as the height above the MSL). These heights are found on topographic maps, stamped on markers, or stored in innumerable digital and paper data sets. To transform between these height systems requires the *geoid height*. These height systems are related by the following equation:

$$h = H + N$$

where—
h = *ellipsoidal height*
H = *orthometric height*
N = *geoid height*

DIFFERENTIAL ERROR SOURCES

8-68. Error sources encountered when using DGPS techniques are the same as for absolute positioning. In addition to these error sources, the receiver must maintain satellite lock on at least three satellites for 2D positioning and four satellites for 3D positioning. When loss of lock occurs, a cycle slip (discontinuity of an integer number of cycles in the measured carrier-beat phase as recorded by the receiver) may occur. In GPS absolute surveying, if satellite lock is not maintained, positional results will not be formulated. In GPS static surveying, if satellite lock is not maintained, positional results may be degraded resulting in incorrect formulations. In GPS static surveying, if the observation period is long enough, postprocessing software may be able to average out loss of lock and cycle slips over the duration of the observation period and formulate adequate positional results. If this is not the case, reoccupation of the stations may be required. In all differential-surveying techniques, if loss of lock does occur on some of the satellites, data processing can continue easily if a minimum of four satellites have been tracked. Generally, the more satellites tracked by the receiver, the more insensitive the receiver is to loss of lock. Cycle slips can usually be compensated.

DIFFERENTIAL ACCURACIES

8-69. There are two levels of accuracy obtainable from the GPS when using differential techniques. The first level is based on pseudorange formulations, while the other is based on carrier-beat-phase formulations.

PSEUDORANGE FORMULATIONS

8-70. Pseudorange formulations can be developed from either the C/A-code or the more precise P-code. Pseudorange accuracies are generally accepted to be 1 percent of the period between successive code epochs. Use of the P-code, where successive epochs are 0.1 millisecond apart, produces results that are about 1 percent of 0.1 millisecond (about 1 nanosecond). Multiplying this value by the speed of light gives a theoretical-resultant range measurement of around 30 centimeters. If using pseudorange formulations with the C/A-code, results can be ten times less precise (a range-measurement precision of around 3 meters). Point-positioning accuracy for a differential pseudorange solution is generally found to be in the range of 0.5 to 10 meters. These accuracies are largely dependent on the type of GPS receiver being used.

CARRIER-BEAT-PHASE FORMULATIONS

8-71. Carrier-beat-phase formulations can be based on either the L1, the L2, or both carrier signals. Accuracies achievable using carrier-beat-phase measurement are generally accepted to be 1 percent of the wavelength. Using the L1 frequency, where the wavelength is around 19 centimeters, a theoretical-resultant range measurement that is 1 percent of 19 centimeters (about 2 millimeters). The L2 carrier can only be used with receivers that employ a cross correlation, squaring, or another technique to get around the effects of AS.

8-72. The final positional accuracy of a point, that was determined using DGPS survey techniques, is directly related to the geometric strength of the configuration of satellites observed during the survey session. GPS errors resulting from satellite-constellation geometry can be expressed in terms of DOP. Positional accuracy for a differential carrier-beat-phase solution is generally in a range of 1 to 10 millimeters.

8-73. In addition to GDOP, PDOP, HDOP, and VDOP, the quality of the baselines produced by the DGPS (static or kinematic) through carrier-phase recovery can be defined by a quantity called relative DOP (RDOP). Multiplying the uncertainty of a double-difference measurement by RDOP yields the relative position error for that solution. The values of RDOP are measured in meters of error in relative position per error of one cycle in the phase measurement. The knowledge of an RDOP, or an equivalent value, is extremely important to the confidence one assigns to a baseline recovery. RDOP represents position recovery over a whole session of time and is not representative of a position recovery at an instant in time. When carrier-phase recovery is used, RDOP values around 0.1 meter per cycle are considered acceptable.

SECTION IV - PRECISE-POSITIONING SURVEY PLANNING

8-74. Using differential carrier-phase surveying to establish control for military projects requires operational and procedural specifications. These specifications are a project-specific function of the control being established. To accomplish these surveys in the most efficient and cost-effective manner and to ensure that the required accuracy is obtained, detailed survey planning

is essential. This section defines GPS-S design criteria and other specifications that are required to establish control for topographic-survey projects.

PROJECT-CONTROL ACCURACY

8-75. The first step in planning a control survey is to determine the ultimate accuracy requirements. Survey accuracy requirements are a direct function of the project's functional needs, that is, the basic requirements needed to support the planning, engineering design, maintenance, and operation. This is true for GPS or conventional surveying to establish project control. Most military activities require relative accuracies (accuracies between adjacent control points) ranging from 1:1,000 to 1:50,000, depending on the nature and scope of the project. Few topographic projects demand positional accuracies higher than 1:50,000 (second-order, Class I).

FUNCTIONAL REQUIREMENTS

8-76. Functional requirements must include planned and future design and mapping activities. Specific control density and accuracy are derived from these functional requirements. Control density within a given project is determined from factors such as planned construction, site-plan and master-plan mapping scales, and artillery/aviation-survey positioning requirements. The relative accuracy for project control is also determined based on such things as mapping scales, design needs, and project type. Most site-plan mapping for design purposes is performed and evaluated relative to the American Society of Photogrammetry and Remote Sensing (ASPRS) standards. These standards apply to photogrammetric mapping, plane-table mapping, and total-station mapping. Network control must be of sufficient relative accuracy to enable other users to reliably connect any supplemental mapping work.

MINIMUM ACCURACY REQUIREMENTS

8-77. Project control surveys should be planned, designed, and executed to achieve the minimum accuracy demanded by the functional requirements. To most efficiently use resources, control surveys should not be designed or performed to achieve accuracy levels that exceed the project requirements. For instance, if a third-order, Class I accuracy standard (1:10,000) is required for most topographic-project survey control, field-survey criteria should be designed to meet this minimum standard.

ACHIEVABLE GPS ACCURACY

8-78. GPS-S methods are capable of providing significantly higher relative positional accuracies with only minimal field observations, as compared with conventional triangulation or a traverse. Although a GPS-S may be designed and performed to support lower-accuracy project-control requirements, the actual results could be several magnitudes better than the requirement. Although higher accuracy levels are relatively easy to achieve with the GPS, it is important to consider the ultimate use of the control on the project when planning and designing GPS control networks. GPS-S adequacy evaluations should be based on the project's accuracy standards, not those theoretically obtainable with the GPS.

NETWORK-DESIGN FACTORS

8-79. Many factors need to be considered when designing a GPS network and planning any subsequent observation procedures. These factors are described below.

PROJECT SIZE AND REQUIRED DENSITY OF CONTROL

8-80. The extent of the project will affect the GPS-S network shape. The type of GPS-S scheme used will depend on the number and spacing of points to be established as specified in the project requirements. In addition, maximum baseline lengths between stations and/or existing control are also prescribed. Often, a combination of GPS-S and conventional-survey densification is the most effective approach.

ABSOLUTE GPS REFERENCE DATUMS

8-81. Coordinate data for baseline observations are referenced and reduced relative to the WGS-84 ECEF coordinate system (X, Y, and Z). For all practical purposes, this system is not directly referenced to, but is closely related to, GRS 80 upon which NAD 83 is related (for CONUS work). Data reduction and adjustment are normally performed using the WGS-84 ECEF coordinate system, with baseline-vector components measured relative to the ECEF coordinate system. The baseline-vector components are denoted by delta [Δ] X, ΔY, and ΔZ.

8-82. If the external network being connected and adjusted to is a part of or belongs to NAD 83, the baseline coordinates may be directly referenced on the GRS-80 ellipsoid since they are nearly equal. All supplemental control that is established is therefore referenced to the GRS-80/NAD-83 coordinate system.

8-83. If a GPS-S is connected to NAD-27 stations that were not adjusted to NAD-83 datum, then these fixed points may be transformed to NAD-83 coordinates using Corpscon, and the baseline reductions and adjustments are performed relative to the GRS-80 ellipsoid. This method is recommended only if resurveying is not a viable option.

8-84. Alternatively, baseline connections to NAD-27 project control may be reduced and adjusted directly on that datum with resultant coordinates on the NAD 27. Geocentric coordinates on NAD-27 datum may be computed using transformation algorithms. Conversions of final adjusted points on NAD-27 datum to NAD 83 may also be performed using Corpscon.

8-85. Ellipsoid heights that are referenced to the GRS-80 ellipsoid differ significantly from the orthometric elevations. This difference (geoidal separation) can usually be ignored for horizontal control. Datum systems other than NAD 27/NAD 83 will be used outside CONUS (OCONUS) locations. Selected military operational requirements in CONUS may also require non-NAD datum references. It is recommended that GPS baselines be directly adjusted on the specific-project datum.

CONNECTIONS TO EXISTING CONTROL

8-86. For most static and kinematic GPS horizontal-control work, at least two existing control points should be connected for referencing and adjusting a

new GPS-S. *Table 8-5* shows GPS-S design, geometry, connection, and observing criteria. Existing points may be part of the NGRS or in-place project control that has been adequately used for years. Additional points may be connected if practical. In some instances, a single existing point may be used to generate spurred baseline vectors for supplemental construction control.

Table 8-5. GPS-S Design, Geometry, Connection, and Criteria

Criterion	Classification Order			
	2nd, I	2nd, II	3rd, I	3rd, II
Relative accuracy:				
ppm	20	50	100	200
1 part in	50k	20k	10k	5k
NGRS network (local project network) (W/F/P)	Yes	Yes	Yes	Yes
Baseline observation check required over existing control	Yes	W/F/P	W/F/P	No
Number of connections with existing network (NGRS or local project control):				
Minimum	2	2	2	2
Optimum	3	3	2	2
New point spacing not less than (m)	1,000	500	200	100
Maximum distance from network to nearest control point in project (km)	50	50	50	50
Minimum network control quadrant location (relative to project center)	2	N/R	N/R	N/R
Master of fiducial stations required	W/F/P	No	No	No
Loop closure criteria:				
Maximum number of baselines/loop	10	20	20	20
Maximum loop length not to exceed (km)	100	200	N/R	N/R
Loop misclosure not less than (ppm)	20	50	100	200
Single spur baseline observations:				
Allowed per order/class	No	No	Yes	Yes
Required number of sessions/baseline	NA	NA	2	2
Required tie to NGRS	NA	NA	No	No
Field-observing criteria (static GPS-Ss):				
Required antenna phase height measurement per session	2	2	2	2
Meteorological observations required	No	No	No	No
Two frequency L1/L2 observations required:				
< 50-km lines	No	No	No	No
> 50-km lines	Yes	Yes	Yes	Yes
Recommended minimum observation time (per session) (min)	60	45	30	30
Minimum number of sessions per GPS baseline	1	1	1	1
Satellite quadrants observed (minimum number)	3 W/F/P	N/R	N/R	N/R
Minimum obstruction angle above horizon (deg)	15	15	15	15

Table 8-5. GPS-S Design, Geometry, Connection, and Criteria (continued)

Criterion	Classification Order			
	2nd, I	2nd, II	3rd, I	3rd, II
Maximum HDOP/VDOP during session	N/R	N/R	N/R	N/R
Photograph and/or pencil rubbing required	A/R	No	No	No
Kinematic GPS surveying:				
Allowable per survey class	Yes	Yes	Yes	Yes
Required tie to NGRS	W/F/P	W/F/P	No	No
Measurement time/baseline (follow manufacturer's specifications)	A/R	A/R	A/R	A/R
Minimum number of reference points	2	2	1-2	1
Preferred references	2	2	2	1
Maximum PDOP	15	15	15	15
Minimum number of observations from each reference station	2	2	2	2
Adjustment and data submittal criteria:				
Approximate adjustments allowed	Yes			
Contract acceptance criteria:				
Type of adjustment	Free (unconstrained)			
Evaluation statistic	Relative distance accuracies			
Error-ellipse sizes	(not used as criteria)			
Histogram	(not used as criteria)			
Reject criteria:				
Statistic	Normalized residual			
Standard	±3 • SEUW			
Optimum/nominal weighting:				
Horizontal	±5 + 2 ppm			
Vertical	±10 + 2 ppm			
Optimum variance of unit weight	Between 0.5 and 1.5			
GPS station/session data recording format	Field-survey book or form			
Final station descriptions	Standard DA form			
Written project/adjustment report required	Yes			

LEGEND:
W/F/P = where feasible and practical
N/R = no requirement for this specification (usually indicates variance with provisional FGCC GPS specifications)
A/R = as required in specific project instructions or manufacturer's operating manual
SEUW = standard error of unit weight

Connections With Existing Project Control

8-87. The first choice for referencing new GPS-Ss is the existing project control. This is true for most surveying methods and has considerable legal basis. Unless a newly authorized project is involved, long-established project-control reference points should be used. If the project is currently on a local datum, then a supplemental tie to the NGRS should be considered as part of the project.

Connections With the NGRS

8-88. Connections with the NGRS (for example, National Ocean Service/NGS control on NAD 83) are preferred where prudent and practical. As with conventional surveying, such connections to the NGRS are not mandatory. In many instances, connections with the NGRS are difficult and may add undue cost to a project with limited resources. When existing project control is known to be of poor accuracy, then ties (and total readjustment) to the NGRS may be warranted. Sufficient project funds should be programmed to cover the additional costs of these connections, including data submittal and review efforts if such work is intended to be included in the NGRS.

Mixed NGRS and Project-Control Connections

8-89. NGRS-referenced points should not be mixed with existing project control. This is especially important if existing project control was poorly connected with the older NGRS (NAD 27) or if the method of this original connection is uncertain. Since NGRS control has been readjusted to NAD 83 (including subsequent high-precision HARNs readjustments of NAD 83) and most project control has not, problems may result if these schemes are mixed indiscriminately. If a decision is made to establish or update control on an existing project and connections with the NGRS (for example, NAD 83) are required, then all existing project-control points must be resurveyed and readjusted. Mixing different reference systems can result in different datums, causing adverse impacts on subsequent construction or boundary references. It is far more preferable to use “weak” existing project control for a reference rather than end up with a mixture of different systems or datums.

Accuracy of Connected Reference Control

8-90. Connections should be made to control stations with a higher order of accuracy than is required. This is usually the case where NGRS control is readily available. However, when only existing project control is available, connection and adjustment will have to be performed using that reference system, regardless of its accuracy. GPS-baseline measurements should be performed over existing control to assess its accuracy and adequacy for adjustments or to configure partially constrained adjustments.

Connection Constraints

8-91. *Table 8-5, pages 8-22 and 8-23*, indicates that a minimum of two existing stations are necessary to connect GPS static and kinematic surveys reliably. It is often prudent to include additional NGRS and/or project points, especially if the existing network is not reliable. Adding additional points will provide redundant checks on the surrounding network. This allows for the elimination of these points if the final constrained adjustment indicates a problem with one or more of the fixed points. This table also indicates the maximum-allowable distance that GPS baselines should extend from the existing network. Federal Geodetic Control Subcommittee (FGCS) GPS standards (FGCC 1988) require connections to be spread over different quadrants relative to the survey project. Other GPS standards suggest an equilateral distribution of fixed control on the proposed survey area.

LOCATION FEASIBILITY AND FIELD RECON

8-92. A good advance recon of all marks within the project area is crucial to an expedient and successful GPS-S. The site recon should be completed before the survey is started. Surveyors should prepare a site sketch and a brief description of how to reach the point, since the individual performing the site recon may not be the one that returns to occupy the known or unknown station.

Project Sketch

8-93. A project sketch should be developed before any site recon is performed. The sketch should be on a 1:50,000-scale map or another suitable drawing. Drawing the sketch on a map will assist the planner in determining site selections and travel distances between stations.

Station Descriptions and Recovery Notes

8-94. Station descriptions for all new monuments will be developed as the monuments are established. The format for these descriptions is discussed in Chapter 3. Recovery notes should be written for existing NGRS network stations and project-control points. Estimated travel times to all stations should be included in the description. Include road-travel, walking, and GPS-receiver breakdown and setup time. These times can be estimated during the initial recon. A site sketch should also be made. DA Form 1959 can be used for description/recovery notes.

Way-Point Navigation

8-95. Way-point navigation (optional on some receivers) allows the user to enter the geodetic position (usually latitude and longitude) of points of interest along a particular route. The GPS antenna (fastened to a vehicle or range pole) and receiver can then provide the user with navigational information. This information may include the distance and bearing to the point of destination (stored in the receiver), the estimated time to the destination, and the speed and course of the user. This information can then be used to guide the user to the point of interest. Way-point navigation may also be helpful in the recovery of control stations that do not have descriptions. If a user has the capability of real-time code-phase positioning, the way-point-navigational accuracy can be in the range of 0.5 to 10 meters.

Site-Obstruction/Visibility Sketches

8-96. Record the azimuth and vertical angle of all obstructions during the site recon. The azimuths and vertical angles should be determined with a compass and an inclinometer, because obstructions such as trees and buildings cause the GPS signal being transmitted from the GPS satellite to be blocked. It is also important to know the type of obstruction to determine if multipath might be a problem. The obstruction data are needed to determine if the survey site is suitable for GPS surveying. Obstruction data should be plotted in a station-visibility diagram as shown in *Figure 8-1, page 8-26*. GPS surveying requires that all stations have an unobstructed view 15° above the horizon and satellites below 10° should not be observed.

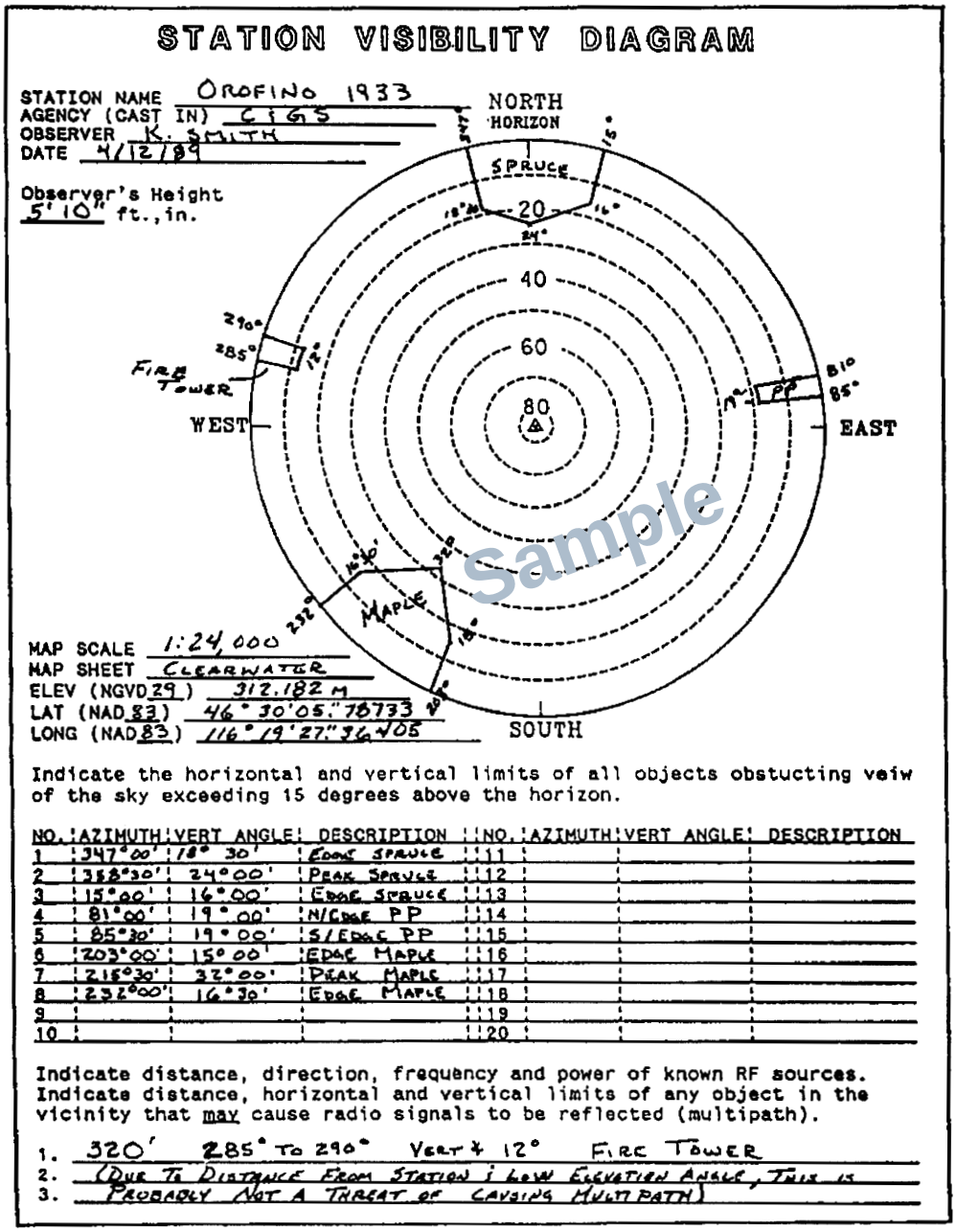

Figure 8-1. Sample Station-Visibility Diagram

Suitability for Kinematic Observations

8-97. Obstruction-free projects may be suitable for kinematic- rather than static-GPS surveys. The use of kinematic observations increases productivity

5 to 10 times over static procedures, while still providing adequate accuracy levels. On many projects, a mixture of static- and kinematic-GPS observations may prove to be the most cost-effective.

On-Site Physical Restrictions and Existing Control

8-98. The degree of difficulty in occupying points due to on-site physical restrictions (such as travel times, site access, multipath effects, and satellite visibility) should be anticipated. The need for redundant observations must also be considered. Additional GPS baselines may need to be observed between existing NGRS control to verify accuracy and/or stability.

Satellite-Visibility Limitations

8-99. There are at least four or five satellites in view at all times for most of CONUS. However, some areas may have less visibility when satellite maintenance is being performed or when there are unhealthy satellites. Satellite-visibility charts of the GPS-satellite constellation are important for optimizing network configuration and observation schedules.

Station-Intervisibility Requirements

8-100. Project specifications may dictate station-intervisibility requirements for azimuth reference. These requirements may constrain the minimum station spacing.

MULTIPLE/REPEAT BASELINE CONNECTIONS

8-101. *Table 8-5, pages 8-22 and 8-23,* lists recommended criteria for baseline connections between stations, repeat baseline observations, and multiple station occupations so that extensive redundancy will result from the collected data. Many of these standards were developed by the FGCS for performing high-precision geodetic-control surveys.

LOOP REQUIREMENTS

8-102. A loop (traverse) provides the mechanism for performing field-data validation as well as final-adjustment accuracy analysis. Since loops of GPS baselines are comparable to traditional EDME/taped traverse routes, misclosures and adjustments can be handled similarly. Most GPS-S networks (static or kinematic) end up with one or more interconnecting loops that are either internal from a single fixed point or external through two or more fixed network points. Loops should be closed off at the spacing indicated in and meet the criteria specified in *Table 8-5, pages 8-22 and 8-23,* based on the total loop length.

8-103. GPS control surveys may be conducted by forming loops between two or more existing points, with adequate cross-connections where feasible. Such alignment techniques are usually most practical on site plans or navigational projects that require control to be established along a linear path. Loops should be formed every 10 to 20 baselines, preferably closing on existing control. Connections to existing control should be made as opportunities exist and/or as often as practical.

8-104. When establishing control over such areas as relatively large military installations, perform a series of redundant baselines to form interconnecting loops. When densifying second- and third-order control for site-plan design and construction, extensive cross-connecting-loop and network configurations (recommended by the FGCS for geodetic surveying) are not necessary.

8-105. On all projects, consider the maximum use of combined static- and kinematic-GPS observations. Both may be configured to form pseudotraverse loops for subsequent field-data validation and final adjustment.

NETWORK DESIGN AND LAYOUT

8-106. A wide variety of survey configurations may be used to densify project control using GPS surveying. Unlike conventional triangulation and EDM traverse surveying, the shape or geometry of the GPS-network design is not as significant. The following guidelines for planning and designing proposed GPS-Ss are intended to support lower-order (second-order, Class I, or 1:50,000 or less accuracy) military control surveys where relative accuracies at the centimeter level or better are required over a small project area. Newly established GPS control may or may not be incorporated into the NGRS. This depends on the adequacy of the connection to the existing NGRS network or whether the connection was tied only internally to existing project control.

8-107. When developing a network design, it is important to obtain the most economical coverage within the prescribed project-accuracy requirements. The optimum network design, therefore, provides a minimum amount of baseline/loop redundancy without an unnecessary amount of observation. Obtaining this optimum design (cost versus accuracy) is difficult and changes constantly due to evolving GPS technology and satellite coverage.

8-108. Planning a GPS-S scheme is similar to planning for conventional triangulation or traversing. The type of survey design used is dependent on the GPS technique and the user's requirements.

GPS NETWORKING

8-109. A GPS network is proposed when established survey control is to be used in precise-network densification (1:50,000 to 1:100,000). For lower-order work, elaborate network schemes are unnecessary and less work-intensive GPS-S methods may be used. The surveyor should devise a survey network that is geometrically sound. The networking method is practical only with static-, pseudokinematic-, and kinematic-survey techniques. *Figure 8-2* shows a step-by-step example of how to design a GPS-S network.

GPS TRAVERSING

8-110. GPS traversing should be used when the user has only two or three receivers and the required accuracies are 1:5,000 to 1:50,000. Traversing with GPS is similar to conventional methods. Open-end traverses are not recommended when 1:5,000 accuracies or greater are required. The GPS does not provide sufficient point-positioning accuracies, so surveyors must have a minimum of one fixed (or known) control point, although three are preferred.

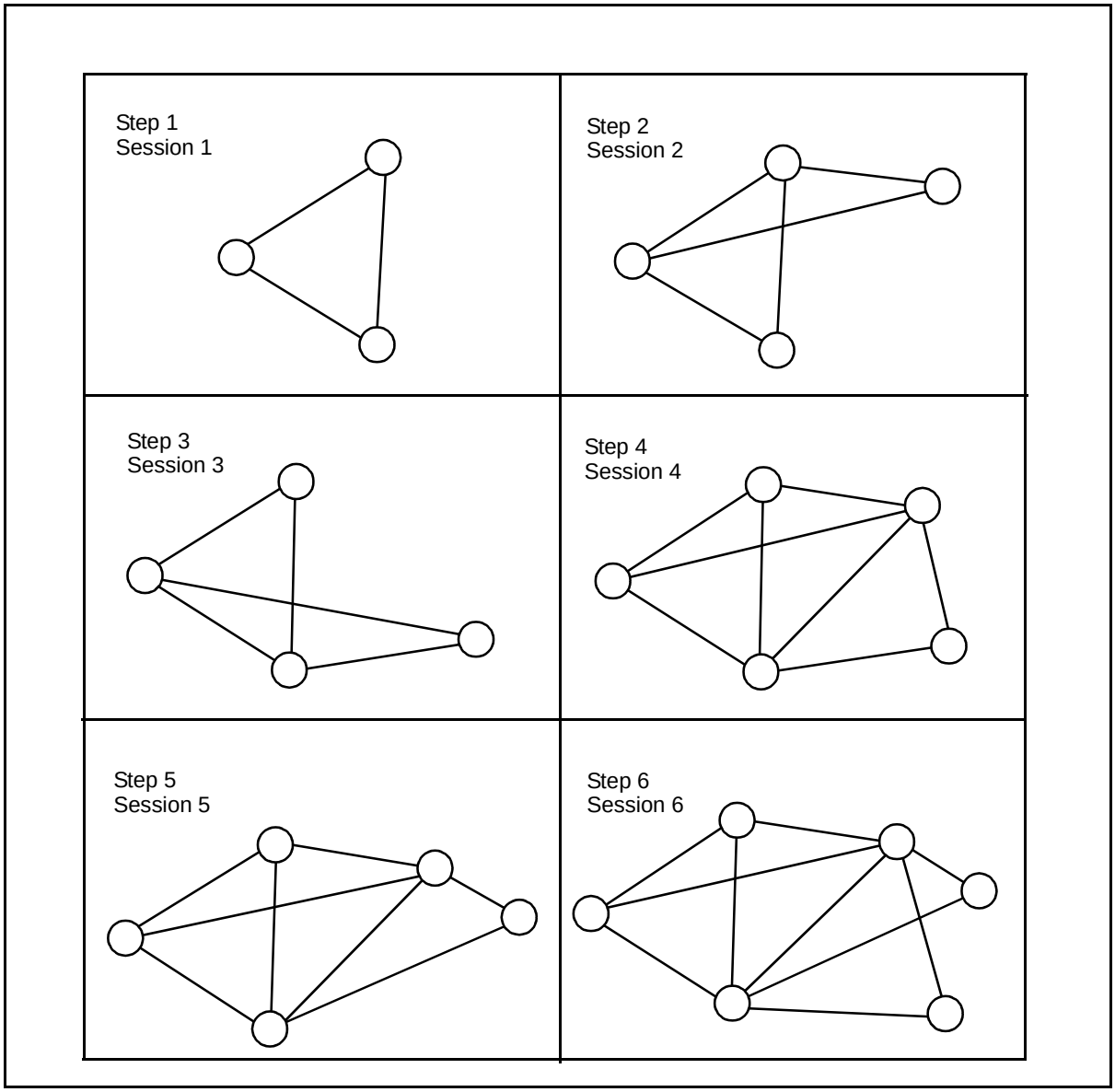

Figure 8-2. GPS-Network Design

8-111. A fixed control point is a station with known latitude, longitude, and height or easting, northing, and height. This point may or may not be part of the NGRS. If only one control point is used and the station does not have a known height, the user will be unable to position the unknown stations.

8-112. When performing a loop traverse, surveyors should observe a check angle or check azimuth using conventional-survey techniques to determine if the known station has been disturbed. If azimuth targets are not visible and a check angle cannot be observed, a closed traverse involving one or more control points is recommended. Again, a check angle or check azimuth should be observed from the starting control station. If a check angle is not performed, the survey can still be completed. However, if the survey does not

meet specified closure requirements, the surveyor will be unable to assess what control point may be in error. If a check angle or check azimuth cannot be observed, a third control point should be tied into the traverse to aid in determining the cause of misclosure *(Figure 8-3)*.

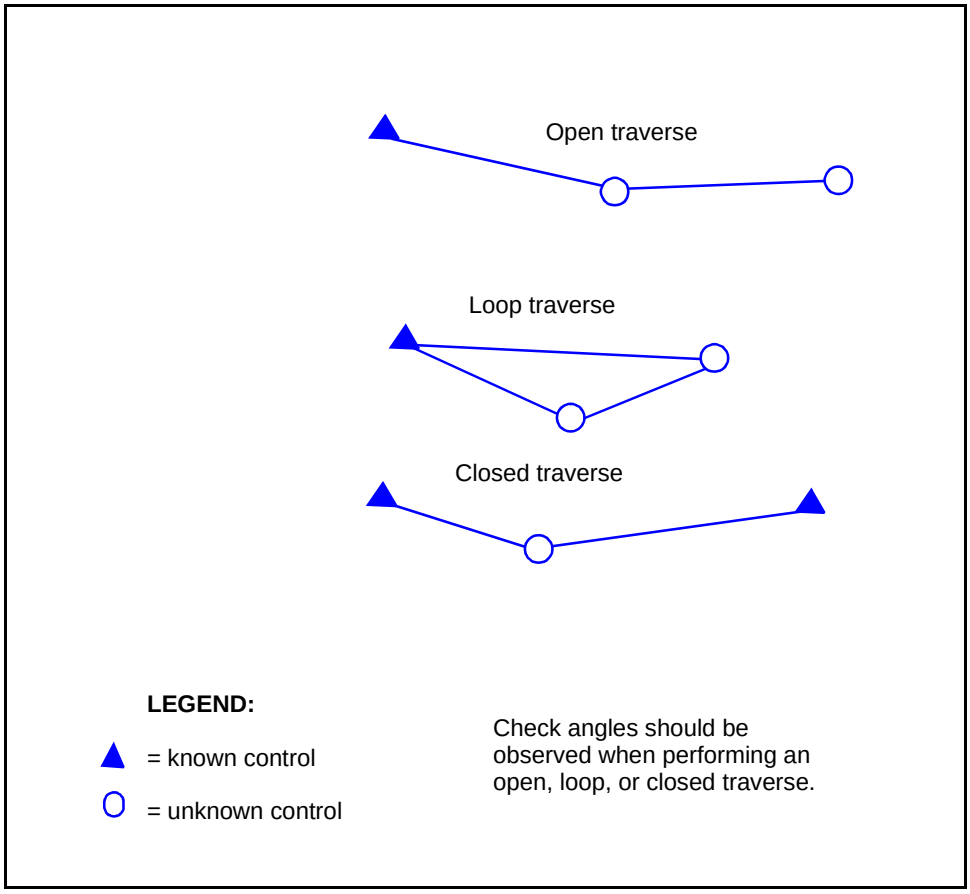

Figure 8-3. GPS-Traversing Schemes

GPS SPUR SHOTS

8-113. GPS spurs shots are acceptable when the user has only two receivers or only a few control points are to be established. Spur lines should be observed twice during two independent observation sessions. Once the first session is completed, the receivers at each station should be turned off and the tripod elevations changed. This procedure is similar to performing a forward and backward level line. It is important that the tripods be moved in elevation and replumbed over the control station between sessions. If this step is not implemented, the two baselines cannot be considered independent. Spur shots are most applicable to static-survey and relative-positioning (code-phase) techniques.

GPS-S TECHNIQUES

8-114. After a GPS network has been designed and laid out, a GPS-S technique needs to be considered. The most efficient technique should be chosen to minimize time and cost, while meeting the accuracy requirements of a given survey project. Once a technique is chosen, the equipment requirements, observation schedules, sessions designations, and planning functions can be determined.

GENERAL EQUIPMENT REQUIREMENTS

8-115. The type of GPS instrumentation used on a project depends on the accuracy requirements, the GPS-S technique, the project size, and economics. Dual-frequency receivers are recommended for baselines that exceed 50 kilometers. The length of the baseline may vary depending on the amount of solar activity during the observation period. Using a dual-frequency receiver permits the user to solve for possible ionospheric and tropospheric delays, which can occur as the signal travels from the satellite to the receiver antenna.

Receivers

8-116. A minimum of two receivers is required to perform a DGPS survey. The actual number used on a project will depend on the project size and the number of available instruments and operators. Using more than two receivers will often increase productivity and field-observation efficiency. Some kinematic applications require two reference receivers (set at known points) and at least one rover receiver.

Personnel

8-117. Personnel requirements are also project dependent. Most GPS equipment is compact and lightweight and only requires one person per station setup. However, when a station is not easily accessible or requires additional power for a data link, two individuals may be required.

Transportation

8-118. Normally, one vehicle is required for each GPS receiver used. Vehicles should be equipped to handle the physical conditions that may be encountered during the field observations. In most cases, a two-wheel-drive vehicle is adequate. If adverse site conditions exist, a four-wheel-drive vehicle may be required. Adequate and reliable transportation is important when the observation schedule requires moving from one station to another between observation sessions.

Auxiliary Equipment

8-119. Adequate power should be available for all equipment (such as, receivers, PCs, and lights) that will be used during the observations. PCs, software, and data-storage devices (floppy disks and/or cassette tapes) should be available for on-site field-data reduction. Other equipment should include tripods, tribrachs, tape measures, flags, flashlights, tools, equipment cables, a

compass, and an inclinometer. A data link is also needed if real-time positioning is required.

OBSERVATION SCHEDULES

8-120. Planning a GPS-S requires a determination of when satellites will be visible for the given survey area. The first step in determining observation schedules is to plot the satellite visibility for the project area. Even when the GPS becomes fully operational, a full two-hour coverage of at least four satellites may not be available in all areas.

8-121. Most GPS-equipment manufacturers have software packages that predict satellite rise and set times. A satellite plot should have the satellites' azimuths, elevations, rise and set times, and PDOPs for the desired survey area. Satellite-ephemeris data is generally required as input for prediction software.

8-122. To obtain broadcast-ephemeris information, a GPS receiver collects data during a satellite window. The receiver antenna does not have to be located over a known point when collecting a broadcast ephemeris. The data is then downloaded into a satellite-prediction software. Besides inputting ephemeris data, the approximate latitude and longitude (usually scaled from a topographic map) and the time offset from UTC for the survey area are generally required.

8-123. The best time to perform a successful GPS-S can be obtained by taking advantage of the best combination of the satellites' azimuths, elevations, and PDOPs as determined by the satellite-visibility plot for the desired survey area. The number of sessions and/or stations observed per day will depend on the satellite visibility, the travel time between stations, and the final accuracy required. A receiver is often required to occupy a station for more than one session per day.

8-124. A satellite sky plot *(Figure 8-4)* and a PDOP versus time plot *(Figure 8-5, page 8-34)* should be run before a site recon. The output files created by the satellite-prediction software are used in determining if a site is suitable for GPS surveying.

8-125. Station occupation during each session should be designed to minimize travel time and to maximize the overall efficiency of the survey. Determination of session times is based mainly on the satellite-visibility plan with the following factors taken into consideration:

- The time required to permit safe travel between survey sites.
- The time to set up and take down the equipment before and after the survey.
- The time to perform the survey.
- The possible loss of observation time due to unforeseeable problems or complications.

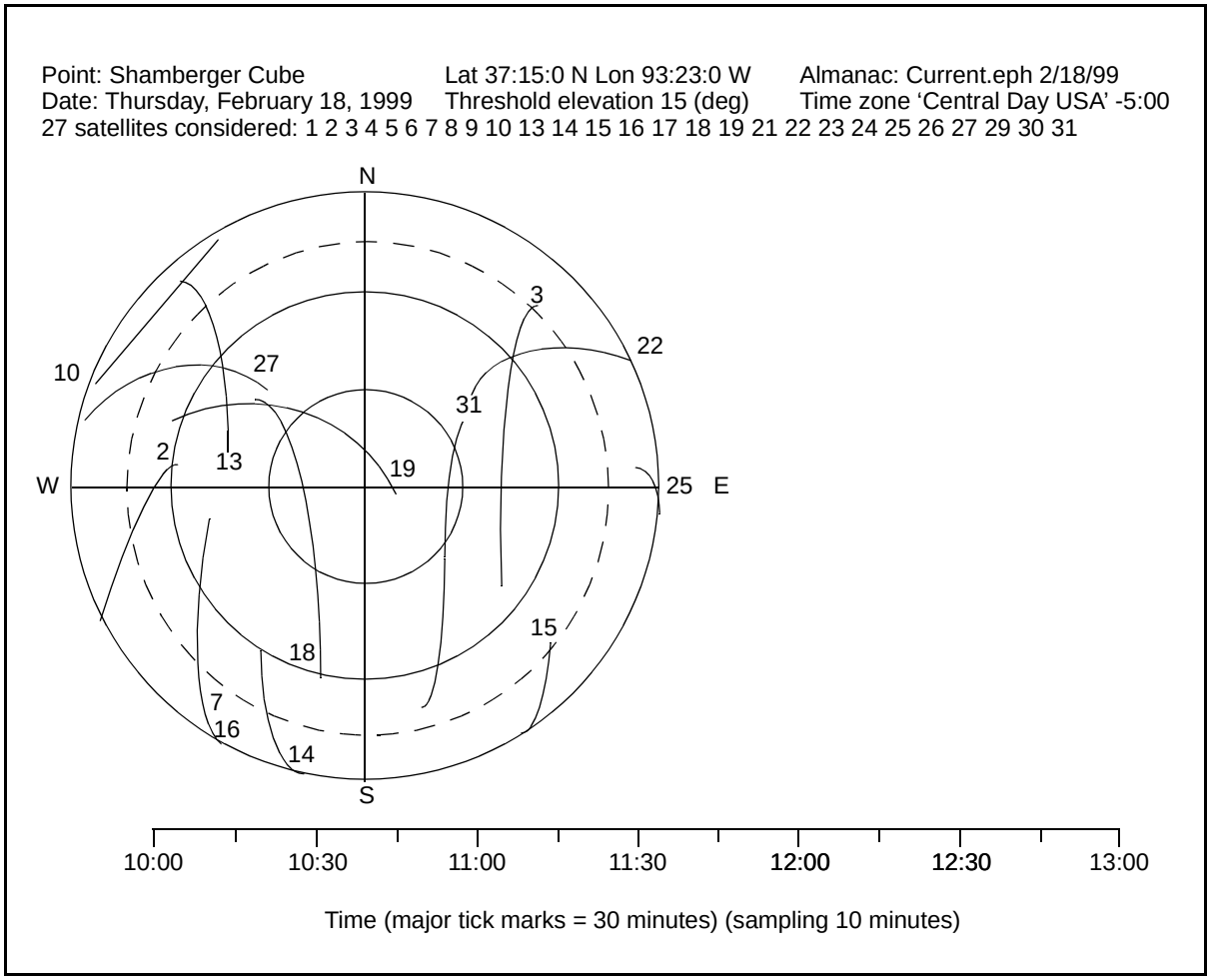

Figure 8-4. Sample Satellite Sky Plot

SESSION DESIGNATIONS AND PLANNING FUNCTIONS

8-126. A GPS-S session is a single period of observation. Station/session designations are usually denoted by alphanumeric characters (for example, 0, 1, 2, A, B, C) and are determined before survey commencement.

8-127. If the party chief states that only eight numeric characters are permitted for station/session designations, the convention would be 12345678. The eight numeric characters are identified as follows:

- First character. This character denotes the type of monument. The following convention is recommended:
  - 1 = known horizontal-control monument.
  - 2 = known BM.
  - 3 = known 3D monument.
  - 4 = new horizontal-control monument.
  - 5 = new BM.

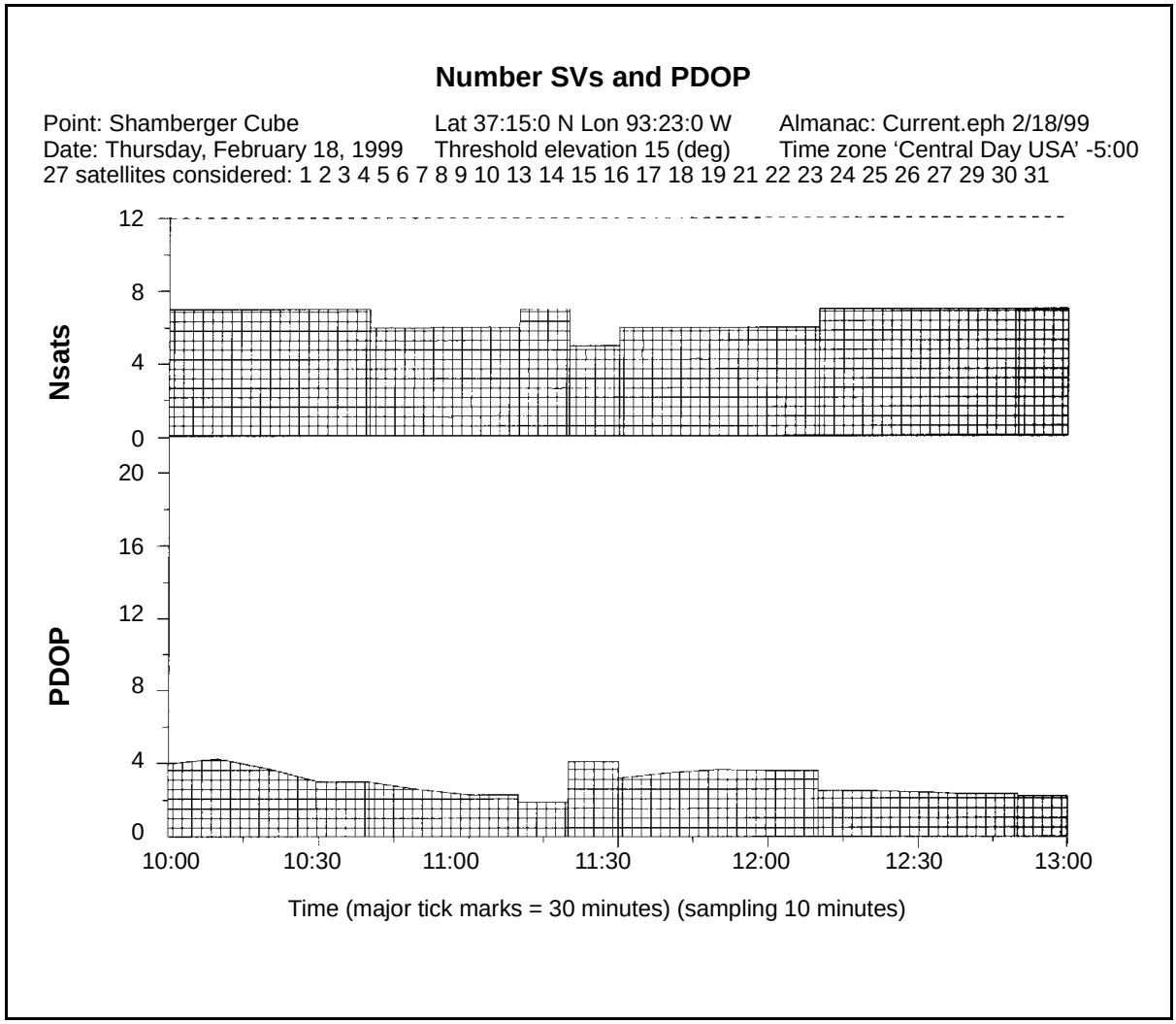

Figure 8-5. PDOP Versus Time Plot

- 6 = new 3D monument.
- 7 = unplanned occupation.
- 8 = temporary 2D point.
- 9 = temporary 3D point.

- Second, third, and fourth characters. These characters denote the actual station number given to the station.
- Fifth, sixth, and seventh characters. These characters denote the Julian day of the year.
- Eighth character. This character denotes the session number.

8-128. An example of a station designation is:

Character position = 12345678
Station identifier = 40011821

- The numeral 4 in the first position indicates that the monument is new and only the horizontal position is being established.
- The numerals 001 are the station number for the monument.
- The numerals 182 are the Julian date.
- The numeral 1 in the eighth position identifies the session number during which observations are being made. If the receiver performed observations during the second session on the same day on the same monument, the session number should be changed to 2 for the period of the second session.

8-129. When alpha characters are permitted for a station/session designation, a more meaningful designation can be assigned. The date of each survey session should be recorded during the survey as calendar dates and Julian days and used in the station/session designation. Some GPS software programs will require Julian dates.

8-130. In addition to determining station/session designations, the following processes should be done before the survey begins:

- Determine the occupant of each station.
- Determine the satellite visibility for each station.
- Request site-recon data for each station to be occupied (prior data may require clarification before survey commencement).
- Develop a project sketch.
- Issue explicit instructions on when each session is to begin and end.
- Complete a station data-logging sheet for each station.

SECTION V - PRECISE-POSITIONING SURVEY CONDUCT

8-131. This section presents guidance on field GPS-Ss for all types of projects. The primary emphasis in this section is on static and kinematic carrier-phase DGPS measurements.

BASIC GPS-S PROCEDURES

8-132. The following are some general DGPS field-survey procedures. They should be performed at each station or during each session on a GPS-S.

RECEIVER SETUP

8-133. GPS receivers shall be set up according to manufacturers' specifications before beginning any observations. To eliminate any possibility of missing the beginning of the observation session, all equipment should be set up and power should be supplied to the receivers at least 10 minutes before the beginning of the observation session. Most receivers will lock on to satellites within 1 to 2 minutes of power-up.

ANTENNA SETUP

8-134. All tribrachs should be calibrated and adjusted before beginning each project. Since centering errors represent a major error source in all survey work, use both optical plummets and standard plumb bobs.

HI MEASUREMENTS

8-135. HI refers to the correct measurement of the distance of the GPS antenna above the reference monument over which it has been placed. Make HI measurements before and after each observation session, from the monument to a standard reference point on the antenna. Establish standard reference points for each antenna before the beginning of the observations. Make observations in both meters and feet for redundancy and blunder detection. Determine HI measurements to the nearest millimeter and to the nearest 0.01 foot. Note whether the HI is vertical or diagonal.

FIELD OBSERVATION PROCEDURES

8-136. Field-recording books, log sheets, log forms, or any acceptable recording media will be completed for each station and/or session. These records will be used for archival purposes. The amount of recording detail will depend on the project. Low-order geographic-mapping points do not need as much descriptive information as permanently marked primary-control points. Unit commands may require that additional data be recorded. These requirements are contained in the project instructions. The following data should be included in the field records:

- Project name, project-directive number, observer name(s), and unit name.
- Station-designation number.
- Station file number.
- Date and weather conditions.
- Session start and stop time (local and UTC).
- Receiver, antenna, DRU, and tribrach make, model, and serial number.
- Antenna height (vertical or diagonal measures in inches [or feet] and centimeters [or meters]).
- Satellite-vehicle (SV) designation and number.
- Station-location sketch.
- Geodetic location and elevation (approximate).
- Problems encountered.

FIELD PROCESSING AND VERIFICATION

8-137. It is strongly recommended that GPS-data processing and verification be performed in the field (if applicable). This identifies any problems that may exist and can be corrected before returning from the field.

ABSOLUTE POSITIONING

8-138. The accuracy obtained by GPS point positioning is dependent on the user's authorization. The SPS user can obtain an accuracy of 80 to 100 meters. SPS data are most often expressed in real time; however, the data can be postprocessed if the station occupation was over a period of time. The postprocessing produces a best-fit point position. Although this will provide a better internal approximation, the effects of S/A still degrade a positional accuracy of 80 to 100 meters. PPS users require a decryption device within the receiver to decode the effects of S/A. PPS provides an accuracy between 10 and

16 meters when a single-frequency receiver is used for observation. Dual-frequency receivers using the precise ephemeris may produce an absolute-positional accuracy of 1 meter or better. These positions are based on the absolute WGS-84 ellipsoid. PPS uses precise ephemeris, which requires the data to be postprocessed. The military uses a GPS-S receiver that is capable of meter-level GPS point positioning without postprocessing.

8-139. There are two techniques used for point positioning in the absolute mode—long-term averaging of positions and differencing between signals. In long-term averaging, a receiver is set up to observe and store positions over a period of time. The length of the observation time depends on the accuracy required. The longer the period of data collection, the more accurate the position. The observation times can range between 1 and 2 hours. This technique can also be used in real time (the receiver averages the positions as they are calculated). The process of differencing between signals can only be performed in a postprocessed mode. NIMA has produced software that can perform this operation.

DIFFERENTIAL POSITIONING

8-140. DGPS surveying is used to determine one location with respect to another location. When using this technique with the C/A- or P-code, it is called differential code-phase positioning or surveying. Differential code-phase positioning has limited application to detailed engineering surveying and topographic site-plan mapping applications. Exceptions include general recon surveys and military operational or geodetic-survey support functions. Additional applications for differential code-phase positioning have been on the increase as positional accuracy has increased. The code-phase-tracking differential system is a functional GPS-S system for positioning hydrographic-survey vessels and dredges. It also has application for small-scale, topographic mapping surveys or as input to a geographic-information-system (GIS) database. The collected data is used as input for a GIS database. A real-time dynamic DGPS positioning system includes a reference station, a communication link, and remote user equipment. If real-time results are not required, the communication link can be eliminated and the positional information postprocessed. Differential code-phase surveys can obtain accuracies of 0.5 to 0.05 meter.

REFERENCE STATION

8-141. A reference station is placed on a known survey monument in an area having an unobstructed view of at least four satellites that are 10° above the horizon. The reference station consists of a GPS receiver and antenna, a processor, and a communication link (if real-time results are desired). The reference station measures the timing and ranging information that is broadcast by the satellites and computes and formats range corrections for broadcast to the user's equipment. Using differential pseudoranging, the position of a survey vessel is found relative to the reference station. The pseudoranges are collected by the GPS receiver and transferred to the processor where PRCs are computed and formatted for data transmission. Many manufacturers have incorporated the processor within the GPS receiver, eliminating the need for an external processing device. The recommended data format is established by the Radio Technical Commission

for Maritime (RTCM) Services Special Committee (SC). The processor should be capable of computing and formatting PRCs every 1 to 3 seconds.

COMMUNICATION LINK

8-142. A communication link is used as a transfer media for differential corrections. The main requirement of the communication link is that transmission be at a minimum rate of 300 bits per second. The type of communication system is dependent on the user's requirements.

Frequency Authorization

8-143. All communication links necessitate a reserved frequency for operation to avoid interference with other activities in the area. No transmission can occur over a frequency until the frequency has been officially authorized for transmitting digital data. This applies to all government agencies. Allocating a frequency is handled by the responsible frequency manager.

Ultrahigh-Frequency and Very-High-Frequency Broadcast Distance

8-144. Communication links operating at ultrahigh frequency (UHF) and very-high frequency (VHF) are viable systems for the broadcast of DGPS corrections. UHF and VHF can extend out 20 to 50 kilometers, depending on local conditions. The disadvantages of UHF and VHF links are their limited range to line of sight and the effects of signal shadowing (for example, islands, structures, and buildings), multipath, and licensing issues.

License-Free Radio Modems

8-145. Several companies have developed low-wattage (1 watt or less) radio modems to transmit digital data. These radio modems require no license and can be used to transmit DGPS corrections in a localized area. The disadvantages of these radio modems is their limited range and line of sight.

USER'S (REMOTE-STATION) EQUIPMENT

8-146. The remote receiver should be a multichannel dual-frequency Y-code GPS receiver. The receiver must be able to store raw data for postprocessing. During postprocessing, the PRCs are generated with the GPS data from the reference station and then applied to the remote-station data to obtain a correct position. If the results are desired in real time, the receiver must be able to accept the PRCs from the reference station (via a data link) in the RTCM Services SC format and apply those corrections to the measured pseudorange. The corrected position data can then be input and stored in a database.

USCG DGPS NAVIGATION SERVICE

8-147. The USCG DGPS Navigation Service was developed to provide a nationwide (coastal regions, Great Lakes regions, and some inland waterways), all-weather, real-time, radio-navigation service in support of commercial and recreational maritime interests. Its accuracy was originally designed to fulfill an 8- to 20-meter maritime-navigation accuracy. However, a reconfigured version of the USCG system now yields a 1.5-meter 2-deviation RMS at distances upward of 150 kilometers from the reference beacon. The

system operates on the USCG marine radio-beacon frequencies (285 to 325 kilohertz). Each radio beacon has an effective range of 150 to 250 kilometers at a 99.9 percent signal-availability level. It is fully expected that the USCG system, once completed, will be the primary marine-navigation device used by commercial and recreational vessels requiring meter-level accuracy.

DGPS CARRIER-PHASE HORIZONTAL-POSITIONING SURVEYS

8-148. DGPS carrier-phase surveying is used to obtain the highest precision from the GPS and has direct application to most military topographic and engineering surveys. The following six, basic DGPS surveying techniques are in use:

- Static.
- Stop-and-go kinematic.
- Kinematic.
- Pseudokinematic.
- Rapid static.
- OTF/RTK.

DGPS SURVEY TECHNIQUES

8-149. Procedures for performing each of these techniques are described below and should be used as guidelines for conducting a field survey. Specific manufacturers' procedures should also be followed. Project horizontal-control densification can be performed using any one of these techniques. Procedurally, all six techniques are similar in that each measures a 3D baseline vector between a receiver at one point (usually of known local-project coordinates) and a second receiver at another point, resulting in a vector difference between the two occupied points. The major distinction between static and kinematic baseline measurements is the way the carrier-wave integer-cycle ambiguities are resolved; otherwise, they are functionally the same process.

AMBIGUITY RESOLUTION

8-150. Cycle ambiguity (or integer ambiguity) is the unknown number of whole carrier wavelengths between the satellite and the receiver. Successful ambiguity resolution is required for successful baseline formulations. Generally, static surveying can provide instrumental error and ambiguity resolution through long-term averaging and simple geometrical principles, resulting in solutions to a linear equation that produces a resultant position. Ambiguity resolution can also be achieved through a combination of pseudorange and carrier-beat measurements, which are made possible by the PRN modulation code.

POSTOBSERVATION DATA REDUCTION

8-151. All carrier-phase relative-surveying techniques (except OTF/RTK), require postprocessing of the observed data to determine the relative baseline-vector differences. OTF/RTK can be performed in a real-time or postprocessed mode. Postprocessing of observed satellite data involves the differencing of signal-phase measurements recorded by the receiver. The differencing process

reduces biases in the receiver and satellite oscillators and is performed with a PC. All baseline reductions should be performed in the field (if possible) to allow an on-site assessment of the survey adequacy.

STATIC SURVEYING

8-152. Static surveying is perhaps the most common technique of densifying project network control. Two GPS receivers are used to measure a GPS-baseline distance. The line between a pair of GPS receivers from which simultaneous GPS data have been collected and processed is a vector referred to as a baseline. The station coordinate differences are calculated in terms of a 3D ECEF coordinate system that uses X, Y, and Z values based on the WGS-84 ellipsoid. These coordinate differences are then subsequently shifted to the project's coordinate system. GPS receiver pairs are set up over stations of either known or unknown locations. Typically, one of the receivers is positioned over a point whose coordinates are known (or have been carried forward as on a traverse) and the second is positioned over another point whose coordinates are unknown, but desired. Both GPS receivers must receive signals from the same four (or more) satellites for a period of time that can range from a few minutes to several hours, depending on the conditions of observation and the precision required.

STATIC BASELINE-OCCUPATION TIME

8-153. Station-occupation time is dependent on the baseline length, the number of satellites observed, and the GPS equipment. In general, 30 minutes to 2 hours is a good occupation time for baselines of 1 to 30 kilometers. A rough guideline for estimating station-occupation time is shown in *Figure 8-6*.

8-154. There is no definitive guidance for determining the baseline-occupation time; the results from the baseline reduction (and subsequent adjustments) will govern the adequacy of the observation irrespective of the actual observation time. The most prudent policy is to exceed the minimum estimated times, especially for lines where reoccupation would be difficult or field-data assessment capabilities are limited.

8-155. For baselines longer than 50 kilometers, the ionosphere may have an adverse effect on the solution. When using a dual-frequency GPS receiver, adverse ionosphere effects can shorten the baseline length.

SATELLITE-VISIBILITY REQUIREMENTS

8-156. The selected stations must have an unobstructed view of the sky for at least 15° or greater above the horizon during the *observation window*. An observation window is the period of time when observable satellites are in the sky and the survey can be successfully conducted.

COMMON SATELLITE OBSERVATIONS

8-157. It is critical for a static-survey baseline reduction/solution that the receivers simultaneously observe the same satellites during the same time interval. For instance, if receiver number 1 observes a satellite constellation during the time interval 1000 to 1200 and receiver number 2 observes that same satellite constellation during the time interval 1100 to 1300, only the

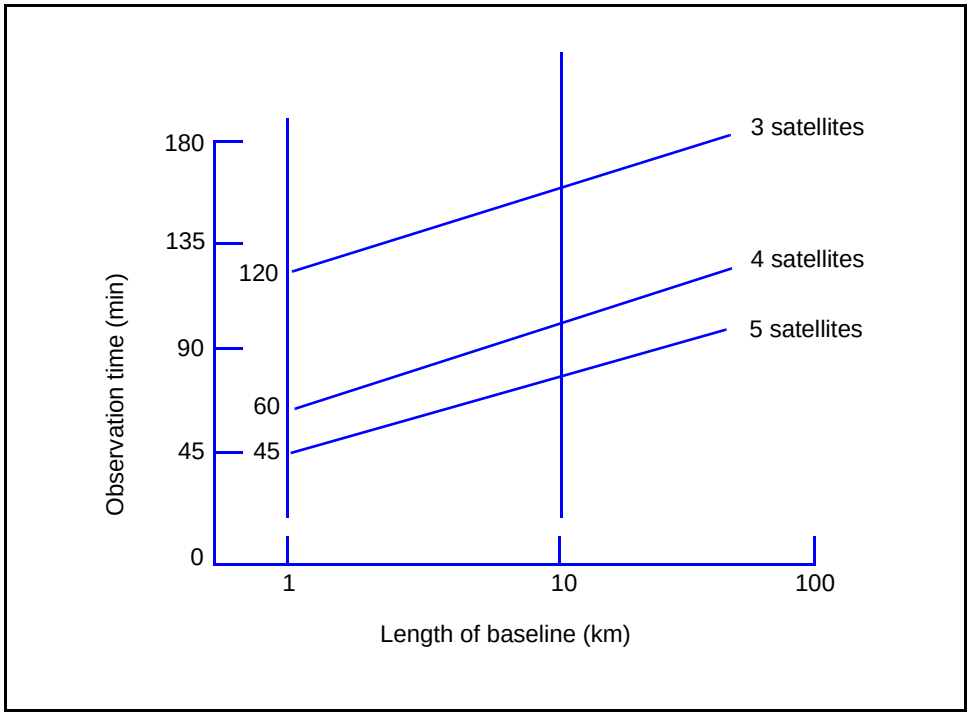

Figure 8-6. Station-Occupation Time

period of common observation (1100 to 1200) can be processed to formulate a correct vector difference between these receivers.

DATA POSTPROCESSING

8-158. After completing the observation session, the received GPS signals from both receivers are processed in a PC to calculate the 3D baseline-vector components between the two observed points. From these vector distances, local or geodetic coordinates may be computed and/or adjusted.

SURVEY CONFIGURATION

8-159. Static baselines may be extended from existing control using a control-densification method. These methods include networking, traverse, spur techniques, or combinations thereof. Specific requirements are normally contained in the project's instructions.

RECEIVER OPERATION AND DATA REDUCTION

8-160. Receiver operation and baseline-data postprocessing requirements are manufacturer-specific. The user should consult and study the manufacturer's operations manual (including the baseline data-reduction examples).

ACCURACY

8-161. Accuracy of static surveys will usually exceed 1 ppm. Static is the most accurate of all GPS techniques and can be used for any order survey.

STOP-AND-GO KINEMATIC SURVEYING

8-162. Stop-and-go kinematic surveying is similar to static surveying in that it requires at least two receivers simultaneously recording observations. A major difference between static and stop-and-go surveying is the amount of time required for a receiver to stay fixed over an unknown point. In stop-and-go surveying, the first receiver (the home or reference receiver) remains fixed on a known control point. The second receiver (the rover receiver) collects observations statically on a point of unknown position for a period of time (usually a few minutes) and then moves to subsequent unknown points to collect signals for a short period of time. During the survey, at least four (preferably five) common satellites need to be continuously tracked by both receivers. Once all required points have been occupied by the rover receiver, the observations are postprocessed by a PC to calculate the baseline-vector and coordinate differences between the known control point and points occupied by the rover receiver during the survey session. The main advantage of this technique over static surveying is the reduced occupation time required over the unknown points. Because less occupation time is required, the time spent and the cost of conducting the survey are significantly reduced. Achievable accuracies typically equal or exceed third order.

PROCEDURES

8-163. Stop-and-go surveying is performed similarly to a conventional EDM traverse or electronic total-station radial survey. The GPS is initially calibrated by performing either an antenna swap (described below) with one known point and one unknown point or by performing a static measurement over a known baseline. This calibration process is performed to resolve initial cycle ambiguities. The known baseline may be part of the existing network or can be established using static-survey techniques. The roving receiver traverses between unknown points as if performing a radial-topographic survey. Typically, the points are double-connected, or double-run, as in a level line. Optionally, two fixed receivers may be used to provide redundancy on the remote points. With only 1 1/2 minutes at a point, production of coordinate differences is high and limited only by satellite observation windows, travel time between points, and overhead obstructions.

SATELLITE LOCK

8-164. During a stop-and-go survey, the rover station must maintain satellite lock on at least four satellites during the period of observation (the reference station must be observing at least the same four satellites). Loss of lock occurs when the receiver is unable to continuously record satellite signals or a transmitted satellite signal is disrupted and the receiver is not able to record it. If satellite lock is lost, the roving receiver must reobserve the last control station that was surveyed before loss of lock. The receiver operator must monitor the GPS receiver when performing a stop-and-go survey to ensure that loss of lock does not occur. Some manufacturers have incorporated an alarm into their receiver that warns the user when loss of lock occurs.

SITE CONSTRAINTS

8-165. Survey-site selection and the route between rover stations to be observed are critical. All sites must have a clear view (a vertical angle of 15° or greater) of the satellites. The route between rover stations must be clear of obstructions so that the satellite signal is not interrupted. Each unknown station to be occupied should be occupied for a minimum of 1 1/2 minutes. Stations should be occupied two or three times to provide redundancy between observations.

ANTENNA-SWAP CALIBRATION

8-166. Although antenna-swap calibration can be used to initialize a stop-and-go survey, it can also be used to determine a precise baseline and azimuth between two points. Both stations occupied and the path between both stations must maintain an unobstructed view of the horizon. A minimum of four satellites and maintainable satellite lock are required; however, more than four satellites are preferred. One receiver/antenna is placed over a known control point and the second receiver/antenna is placed a distance of 10 to 100 meters away from the first receiver. The receivers at each station collect data for about 2 to 4 minutes. Then the receiver/antenna locations are swapped. The receiver/antenna at the known station is moved to the unknown site while the other receiver/antenna is moved to the known site. Satellite data are again collected for 2 to 4 minutes. The receivers are then swapped back to their original locations. This completes one antenna-swap calibration. If satellite lock is lost, the procedure must be repeated.

ACCURACY

8-167. Accuracy of stop-and-go baseline measurements will usually exceed 1 part in 5,000; thus, third-order classification for horizontal control can be effectively, efficiently, and accurately established using this technique. For many projects, this order of horizontal accuracy will be more than adequate; however, field procedures should be designed to provide adequate redundancy for *open-ended* or *spur* points. Good satellite geometry and minimum multipath are also essential for performing acceptable stop-and-go surveys.

KINEMATIC SURVEYING

8-168. Kinematic surveying using differential carrier-phase tracking is similar to stop-and-go and static surveying because it also requires two receivers to record observations simultaneously. Kinematic surveying is often referred to as dynamic surveying. As in stop-and-go surveying, the reference receiver remains fixed on a known control point while the roving receiver collects data on a constantly moving platform (for example, a vehicle, a vessel, an aircraft, or a backpack). Kinematic surveying techniques do not require the rover receiver to remain motionless over the unknown point. The observed data is postprocessed with a PC, and the relative vector/coordinate differences to the roving receiver are calculated.

PROCEDURES

8-169. A kinematic survey requires two single-frequency (L1) receivers. One receiver is set over a known point (reference station) and the other is used as a rover. Before the rover receiver can move, a period of static initialization or an antenna swap must be performed. This period of static initialization is dependent on the number of satellites visible. Once this is done, the rover receiver can move from point to point as long as satellite lock is maintained on at least four common satellites (common with the known reference station). If loss of lock occurs, a new period of static initialization must take place. It is important to follow the manufacturers' specifications when performing a kinematic survey.

DATA PROCESSING

8-170. Kinematic data-processing techniques are similar to those used in static surveying. When processing kinematic GPS data, the user must ensure that satellite lock was maintained on four or more satellites and that cycle slips were adequately resolved within the data recorded.

ACCURACY

8-171. Kinematic-survey errors are correlated between observations received at the reference and rover receivers. Test results indicate kinematic surveys can produce results in centimeters. Test results from a full-kinematic GPS-S conducted by TEC personnel at White Sands Missile Range verified (under ideal test conditions) that kinematic GPS surveying could achieve centimeter-level accuracy for distances of up to 30 kilometers.

PSEUDOKINEMATIC SURVEYING

8-172. Pseudokinematic surveying is similar to kinematic surveying except that loss of lock is tolerated when the receiver is transported between occupation sites (the roving receiver can be turned off during movement, but this is not recommended). This feature provides the surveyor with a more favorable positioning technique since obstructions such as a bridge overpass, tall buildings, and overhanging vegetation are common. Loss of lock that may result due to these obstructions is more tolerable when pseudokinematic techniques are employed. Mission planning is essential for conducting a successful pseudokinematic survey. Especially critical is the determination of whether or not common satellite coverage will be present for the desired period of the survey.

PROCEDURES

8-173. Pseudokinematic surveying requires that one receiver must continuously occupy a known control station. A rover receiver occupies each unknown station for 5 minutes. About 1 hour after the initial station occupation, the same rover receiver must reoccupy each unknown station.

COMMON SATELLITE REQUIREMENTS

8-174. Pseudokinematic surveying requires that at least four of the same satellites be observed between the initial station occupations and the requisite

reoccupation. For example, the rover receiver occupies Station A for the first 5 minutes and tracks satellites 6, 9, 11, 12, and 13; then 1 hour later, during the second occupation of Station A, the rover receiver tracks satellites 2, 6, 8, 9, and 19. Only satellites 6 and 9 are common to the two sets, so the data cannot be processed because four common satellites were not observed between the initial station occupation and the requisite reoccupation.

DATA PROCESSING AND ACCURACY

8-175. Pseudokinematic-survey satellite-data records and resultant baseline processing are similar to those performed for static GPS-Ss. Since pseudokinematic surveying requires each station to be occupied for 5 minutes and then reoccupied for 5 minutes about one hour later, it is not suitable when control stations are widely spaced and transportation between stations within the allotted time is impractical. Pseudokinematic-surveying achieves accuracies of a few centimeters.

RAPID-STATIC SURVEYING

8-176. Rapid-static surveying is a combination of stop-and-go kinematic, pseudokinematic, and static surveying. The rover receiver spends only a short time on each station (loss of lock is allowed between stations) and accuracies are similar to static surveying. However, rapid-static surveying does not require reobservation of remote stations like pseudokinematic surveying. Rapid-static surveying requires the use of dual-frequency GPS receivers with either cross correlation or squaring or any other technique used to compensate for AS.

PROCEDURES

8-177. Rapid-static surveying requires that one receiver be placed over a known control point. A rover receiver occupies each unknown station for 5 to 20 minutes, depending on the number of satellites and their geometry. Because most receiver operations are manufacturer-specific, following the manufacturers' guidelines are important.

DATA PROCESSING AND ACCURACY

8-178. Data should be processed according to the manufacturers' specifications. Accuracies are similar to static surveys of 1 centimeter or less. Rapid-static surveying can be used for medium- to high-accuracy surveys up to 1:1,000,000.

OTF/RTK SURVEYING

8-179. OTF/RTK surveying is similar to kinematic surveying because it requires two receivers that record observations simultaneously and allows the rover receiver to be moving. Unlike kinematic surveying, OTF/RTK surveying uses dual-frequency GPS observations and can handle loss of lock. OTF/RTK surveying uses the L2 frequency, and the GPS receiver must be capable of tracking the L2 frequency during AS. Two techniques that are used to obtain L2 during AS include squaring and cross correlation.

AMBIGUITY RESOLUTION

8-180. Successful ambiguity resolution is required for successful baseline formulations. The OTF/RTK technology allows the rover receiver to initialize and resolve baseline integers without a period of static initialization. If loss of lock occurs, reinitialization can be achieved while the remote is in motion. The integers can be resolved at the rover receiver within 10 to 30 seconds, depending on the distance from the reference station. OTF/RTK surveying requires that the L2 frequency be used in the ambiguity resolution. After the integers are resolved, only the L1 C/A-code is used to compute the positions.

PROCEDURES

8-181. OTF/RTK surveying requires dual-frequency GPS receivers. One of the GPS receivers is set over a known point and the other is placed on a moving or mobile platform. If the survey is performed in real time, a data link and a processor (external or internal) are needed. The data link is used to transfer the raw data from the reference station to the remote. If the OTF/RTK surveying is performed with an internal processor, follow the manufacturers' guidelines. If OTF/RTK surveying is performed with external processors, the PC at the reference station collects and formats the raw GPS data and sends it via a data link to the rover receiver. A notebook computer at the rover receiver is used to process the raw data from the reference and remote receivers to resolve the integers and obtain a position.

ACCURACY

8-182. OTF/RTK surveys are accurate to within 10 centimeters when the distance from the reference receiver to the rover receiver does not exceed 20 kilometers. The results of testing by the TEC produced accuracies of less than 10 centimeters.

SECTION VI - PRECISE-POSITIONING SURVEY-DATA PROCESSING

8-183. GPS-baseline solutions are usually generated through an iterative process. Using approximate values of the positions occupied and observation data, theoretical values for the observation period are developed. Observed values are compared to computed values and an improved set of positions occupied is obtained using least-squares-minimization procedures and equations that model potential error sources. This section discusses general postprocessing issues. Due to the increasing number and variety of software packages available, consult the manufacturer's guidelines when appropriate. Processing time is dependent on the accuracy required, the software, the PC, the data quality, and the amount of data. In general, high-accuracy solutions, crude computer software and hardware, low-quality data, and high volumes of data require longer processing times. Special care must be taken when attempting a baseline formulation with observations from different brands of GPS receivers. It is important to ensure that observables being used for the formulation of the baseline are of common format.

PROCESSING TECHNIQUES

8-184. The capability to determine positions using the GPS is dependent on the ability to determine the range or distance of the satellite from the receiver

located on the earth. There are two general techniques used to determine this range—pseudoranging and carrier-beat-phase measurement.

PSEUDORANGING

8-185. The observable pseudorange is calculated from observations recorded during a GPS-S. The observable pseudorange is the difference between the time of signal transmission from the satellite (measured in the satellite time scale) and the time of signal arrival at the receiver antenna (measured in the receiver time scale). When the differences between the satellite and the receiver clocks are reconciled and applied to the pseudorange observations, the resulting values are corrected pseudorange values. The value found by multiplying this time difference by the speed of light is an approximation of the true range between the satellite and the receiver. The value can be determined if ionosphere and troposphere delays, ephemeris errors, measurement noise, and unmodeled influences are taken into account when pseudoranging calculations are performed. A pseudorange can be obtained from either the C/A-code or the more precise P-code.

CARRIER-BEAT-PHASE OBSERVATIONS

8-186. The observable carrier-beat phase is the phase of the signal remaining after the internal oscillated frequency that is generated in the receiver is differenced from an incoming carrier signal of the satellite. The observable carrier-beat phase can be calculated from the incoming signal or from observations recorded during a GPS-S. By differencing the signal over a period or epoch of time, the number of wavelengths that cycle through the receiver during any given specific duration of time, can be counted. The unknown cycle count passing through the receiver over a specific duration of time is known as the cycle ambiguity. There is one cycle-ambiguity value per satellite/receiver pair as long as the receiver maintains continuous phase lock during the observation period. The value found by measuring the number of cycles going through a receiver during a specific time, when given the definition of the transmitted signal in terms of cycles per second, can be used to develop a time measurement for transmission of the signal. The time of transmission of the signal can be multiplied by the speed of light to yield an approximation of the range between the satellite and the receiver. The biases for carrier-beat-phase measurements are the same as for pseudoranges, although a higher accuracy can be obtained using the carrier. A more exact range between the satellite and the receiver can be formulated when the biases are taken into account during derivation of the approximate range between the satellite and the receiver.

BASELINE SOLUTION BY LINEAR COMBINATION

8-187. The accuracy achievable by pseudoranging and carrier-beat-phase measurement in both absolute- and relative-positioning surveys can be improved through processing that incorporates differencing of the mathematical models of the observables. Processing by differencing takes advantage of the correlation of error (for example, GPS-signal, satellite-ephemeris, receiver-clock, and atmospheric-propagation errors) between receivers, satellites, and epochs, or combinations thereof, to improve GPS

processing. Through differencing, the effects of the errors that are common to the observations being processed are greatly reduced or eliminated. There are three broad processing techniques that incorporate differencing—single, double, and triple. Differenced solutions generally proceed in the following order: differencing between receivers takes place first, between satellites second, and between epochs third.

SINGLE DIFFERENCING

8-188. There are three general single-differencing techniques—between receivers, between satellites, and between epochs.

- **Between receivers.** Single differencing the mathematical models for pseudorange (C/A- or P-code) carrier-phase observable measurements between receivers will eliminate or greatly reduce satellite-clock errors and a large amount of satellite-orbit and atmospheric delays.
- **Between satellites.** Single differencing the mathematical models for pseudorange or carrier-phase observable measurements between satellites will eliminate receiver-clock errors. Single differencing between satellites can be done at each individual receiver during observations as a precursor to double differencing and to eliminate receiver-clock errors.
- **Between epochs.** Single differencing the mathematical models between epochs takes advantage of the Doppler shift (apparent change in the frequency of the satellite signal by the relative motion of the transmitter and the receiver). Single differencing between epochs is generally done in an effort to eliminate cycle ambiguities. Three forms of single-differencing techniques between epochs are—intermittently integrated Doppler (IID), consecutive Doppler counts (CDC), and continuously integrated Doppler (CID).
  - **IID.** IID is a technique whereby the Doppler count is recorded for a small portion of the observation period. The Doppler count is reset to zero and, then at a later time, the Doppler count is restarted during the observation period.
  - **CDC.** CDC is a technique whereby the Doppler count is recorded for a small portion of the observation period. The Doppler count is reset to zero and then restarted immediately.
  - **CID.** CID is a technique whereby the Doppler count is recorded continuously throughout the observation period.

DOUBLE DIFFERENCING

8-189. Double differencing is a differencing of two single differences. Double differencing eliminates clock errors. There are two general double-differencing techniques—receiver-time and receiver-satellite.

- **Receiver time.** This technique requires the use of a change from one epoch to the next in the between-receiver single differences for the same satellite. This technique eliminates satellite-dependent integer-cycle ambiguities and simplifies the editing of cycle slips.
- **Receiver satellite.** There are two techniques that can be used to compute a receiver-satellite double difference. One technique involves

using two between-receiver single differences and a pair of receivers that record different satellite observations between two satellites. The second technique involves using two between-satellite single differences and a pair of satellites, but different receivers, and then differences the satellite observations between the two receivers.

TRIPLE DIFFERENCING

8-190. The triple-differencing technique is called receiver-satellite time. All errors eliminated during single and double differencing are also eliminated during triple differencing. When used in conjunction with carrier-beat-phase measurements, triple differencing eliminates initial cycle ambiguity. During triple differencing, the data is automatically edited by the software to delete any data that is ignored during the triple-difference solution. This is advantageous because of the reduction in the editing of data required; however, degradation of the solution may occur if too much of the data are eliminated.

BASELINE SOLUTION BY CYCLE-AMBIGUITY RECOVERY

8-191. The resultant solution (baseline vector) that is produced from carrier-beat-phase observations when differencing resolves cycle ambiguity is called a "fixed" solution. The exact cycle ambiguity does not need to be known to produce a solution; if a range of cycle ambiguities is known, then a "float" solution can be formulated from the range of cycle ambiguities. It is desirable to formulate a fixed solution. However, when the cycle ambiguities cannot be resolved, which occurs when a baseline is between 20 to 65 kilometers, a float solution may actually be the best solution. The fixed solution may be unable to determine the correct set of integers (fix the integers) required for a solution. Double-difference fixed techniques can be effective for positional solutions over short baselines (less than 20 kilometers). Double-difference float techniques normally can be effective for positional solutions of medium-length lines (20 to 65 kilometers).

DATA PROCESSING AND VERIFICATION

8-192. Baselines should be processed daily in the field to identify any problems that may exist. Once baselines are processed, each baseline output file should be reviewed. The procedures used in baseline processing are manufacturer-specific. Certain computational items within the baseline output are common among manufacturers and may be used to evaluate the adequacy of the baseline observation in the field. The triple-difference float solution is normally listed. The geodetic azimuth and the distance between the two stations are also listed. The RMS is a quality factor that helps identify which vector solution (triple, float, or fixed) to use in the adjustment. The RMS is dependent on the baseline length and the length of baseline observation. *Table 8-6, page 8-50,* provides guidelines for determining the baseline quality. If the fixed solution meets the criteria in this table, the fixed vector should be used in the test. If the vector does not fit into the network

after adjustment, try using the float vector in the adjustments or check to make sure that the stations were occupied correctly.

Table 8-6. Postprocessing Criteria

Distance Between Receivers (km)	RMS Criteria Formulation (d = Distance Between Receivers)	Formulated RMS Range (Cycles)	Formulated RMS Range (m)
0 -10	≤[0.02 + (0.0040 • d)]	0.020 - 0.060	0.004 - 0.012
10 - 20	≤[0.03 + (0.0030 • d)]	0.060 - 0.090	0.012 - 0.018
20 - 30	≤[0.04 + (0.0025 • d)]	0.090 - 0.115	0.018 - 0.023
30 - 40	≤[0.04 + (0.0025 • d)]	0.115 - 0.140	0.023 - 0.027
40 - 60	≤[0.08 + (0.0015 • d)]	0.140 - 0.170	0.027 - 0.032
60 - 100	≤0.17	0.170	0.032
>100	≤0.20	0.200	0.040

NOTES:
1. These are general postprocessing criteria that may be superseded by GPS receiver/software manufacturers' guidelines; consult those guidelines when appropriate.
2. For lines longer than 50 kilometers, dual-frequency GPS receivers are recommended to meet these criteria.

8-193. The first step in processing the data is to transfer the observation data to a storage device for archiving and/or further processing. The types of storage devices include a hard disc, a 3.5-inch diskette, or a magnetic tape.

8-194. Once observation data have been downloaded, preprocessing of the data can be completed. Preprocessing consists of smoothing and editing the data and ephemeris. Smoothing and editing ensures data quantity and quality. Smoothing and editing includes determining and eliminating cycle slips; editing gaps in information; and differencing between receivers, satellites, and epochs.

8-195. Retrieval of postprocessed ephemerides may be required depending on the type of receiver used for the survey. Codeless receivers require a postprocessed ephemerides file. This file can be recorded by another GPS receiver concurrent with the survey or by postprocessed ephemerides provided by an ephemeris service. Code receivers do not require postprocessed ephemerides since they automatically record the broadcast ephemerides during the survey.

8-196. Generally, postprocessing software will provide three solutions—a triple difference, a double-difference fixed solution, and a double-difference float solution. In addition to RDOP as a measurement of the quality of data reduction, two methods that can be used to gauge the success of an observation session (based on data processing done by a differencing process) are RMS and repeatability.

- **RMS.** RMS is a measurement (in units of cycles or meters) of the quality of the observation data collected during a point in time. RMS is dependent on the line length, the signal strength, the ionosphere, the troposphere, and multipath effects. In general, the longer the line and the more signal interference by other electronic gear, the

ionosphere, the troposphere, and multipath effects, the higher the RMS will be. A good RMS factor (between 0.01 and 0.2 cycles) may not always indicate good results but should be considered. RMS can generally be used to judge the quality of the data used in postprocessing and the quality of the postprocessed baseline vector.

- **Repeatability.** Redundant lines should agree to the level of accuracy that the GPS is capable of measuring. For example, if the GPS can measure a 10-kilometer baseline to 1 centimeter ±1 ppm, the expected ratio of misclosure would be as follows:

$$\frac{1\ cm \pm 1\ ppm}{baseline} = \frac{1\ cm \pm 1\ ppm}{10\ km} = \frac{0.01\ m \pm 0.01\ m}{10{,}000\ m} = 1{:}500{,}000$$

Repeated baselines should be near the corresponding ratio.

8-197. A baseline solution typically includes the following information:

- The file name.
- The type of solution (single-, double-, or triple-difference).
- The satellites' availability during the survey for each station occupied.
- The ephemeris file used for the solution.
- The type of satellite selection (manual or automatic).
- The elevation mask.
- The minimum number of satellites used.
- Meteorological data (for example, pressure, temperature, or humidity).
- The session date and time.
- The data-logging start and stop time.
- Station information (for example, location [latitude, longitude, and height], the receiver's serial number, and the antenna's serial number and height).
- The RMS.
- The solution files (ΔX, ΔY, and ΔZ between stations, the slope distance between stations, Δlatitude and Δlongitude between stations, the horizontal distance between stations, and the height differences).
- The epoch intervals.
- The number of epochs.

8-198. Sample static-baseline formulations are shown in *Figure 8-7, page 8-52*. The baseline formulations compensate for the height differences between antennas.

LOOP-CLOSURE CHECKS

8-199. Postprocessing criteria are aimed at an evaluation of a single baseline. To verify the adequacy of a group of connected baselines, a loop closure must be performed on the established baselines. When GPS-baseline traverses or loops are formed, their linear (internal) closure should be determined in the field. If the job requires less than third-order accuracy (1:10,000 or 1:5,000) and the internal loop/traverse closures are very small, a formal (external) adjustment may not be warranted.

U.S. and NATO Military Forces

Project Name:	Belvoir			
Processed:	Sunday, October 19, 1997 16:59			
	WAVE 2.10			
Solution Output File (SSF):	00000272.SSF	IMPORTED		
From Station:	DTP4			
Data file:	DTP40722.DAT			
Antenna Height (meters):	1.608 True Vertical	1.618 Uncorrected		
Position Quality:	Fixed Baseline Solution			
WGS 84 Position:	38° 41' 23.838157" N		X	1109965.311
	77° 08' 03.891696" W		Y	-4859774.737
	6.725		Z	3965514.263
To Station:	FB09			
Data file:	FB090722.DAT			
Antenna Height (meters):	1.611 True Vertical	1.621 Uncorrected		
WGS 84 Position:	38° 41' 42.125849" N		X	1108978.939
	77° 08' [illegible] W		Y	-4859637.075
	5.16[illegible]		Z	3965953.432
Start Time:	3/[illegible]/96 16:46:00.00 GPS	(844 233160.00)		
Stop Time:	3/12/96 17:50:15.00 GPS	(844 237015.00)		
Occupation Time Meas. Interval ([illegible])	01:04:15.00	15.00		
Solution Type:	L1 fixed double difference			
Ephemeris:	Broadcast			
Met Data:	Standard			
Baseline Slope Distance Std. Dev. (meters):	1088.462	0.000185		

	Forward	Backward
Normal Section Azimuth:	301° 12' 27.087988"	121° 12' 03.005418"
Vertical Angle:	-0° 05' 13.855491"	0° 04' 38.662749"

Baseline Components (meters):	dx	-986.371	dy	137.662	dz	439.169
Standard Deviations (meters):		0.000215		0.000458		0.000422
	dn	563.974	de	-930.956	du	-1.656
		0.000174		0.000166		0.000613
					dh	-1.563
						0.000613

Aposteriori Covariance Matrix:	4.611597E-008		
	-6.156637E-008	2.097716E-007	
	4.545004E-008	-1.653685E-007	1.777377E-007

Variance Ratio:	76.5		
Reference Variance:	0.880		
Observable Count/Rejected RMS:	L1 phase	1005/0	0.004

Sample

Figure 8-7. Sample Static-Baseline Formulations

LOOP-CLOSURE SOFTWARE

8-200. The internal closure determines the consistency of the GPS measurements. Internal closures are applicable for loop traverses and GPS networks. It is required that one baseline in the loop be independent. An independent baseline is observed during a different session or different day. Many of the better postprocessing software packages come with a loop-closure program. Refer to the user's manual for the particulars of the loop-closure program.

GENERAL LOOP-CLOSURE COMPUTATION

8-201. If the postprocessing software does not contain a loop-closure program, the user can perform a loop-closure computation as described in the following steps.

Step 1. List the ΔX, ΔY, ΔZ, and the distance components for all baselines used in the loop closure.

Step 2. Sum the ΔX, ΔY, ΔZ, and the distance components for all baselines used in the loop closure.

Step 3. Add the square of each of the summations together and then take the square root of this sum. This resultant value is the misclosure vector for the loop.

Step 4. Calculate the loop-misclosure ratio as follows:

$$\textit{Loop-misclosure ratio} = \frac{m}{L}$$

where—
m = misclosure vector for the loop
L = total-loop distance (perimeter distance)

8-202. The resultant value can be expressed as 1:loop-misclosure ratio. All units for the expressions are stated in terms of the units used in the baseline formulations (for example, meters, feet, or millimeters).

EXTERNAL CLOSURES

8-203. External closures are computed in a manner similar to internal loops. External closures provide information on how well the GPS measurements conform to the local coordinate system. Before the closure of each traverse is computed, the latitude, the longitude, and the ellipsoid height must be converted to geocentric coordinates (X, Y, and Z). If the ellipsoid height is not known, geoid-modeling software can be used with the orthometric height to get an approximate ellipsoid height. The external closure aids in determining the quality of the known control and how well the GPS measurements conform to the local network. If the control stations are not of equal precision, the external closures will usually reflect the lower-order station. If the internal closure meets the requirements of the job but the external closure is poor, the known control is probably deficient and an additional known control point should be included in the system.

DATA ARCHIVAL

8-204. The raw data is the data recorded during the observation period. Raw data should be stored on an appropriate medium (such as a floppy disk, a portable hard drive, or a magnetic tape). The raw data and the hard copy of the baseline reduction (resultant baseline formulations) should be stored at the discretion of each unit's command.

SECTION VII - PRECISE-POSITIONING SURVEY ADJUSTMENTS

8-205. Differential carrier-phase GPS-S observations are adjusted the same as conventional-survey observations. Each 3D GPS-baseline vector is treated as a separate distance observation and adjusted as part of a network. A variety of methods may be used to adjust the observed GPS baselines to fit existing control. Since GPS-S networks often contain redundant observations, they are usually adjusted by some type of a rigorous least-squares-minimization method. This section describes some of the methods used to perform horizontal GPS-S adjustments and provides guidance on evaluating the adequacy and accuracy of the adjustment results.

GPS ERROR-MEASUREMENT STATISTICAL TERMS

8-206. To understand the adjustment results of a GPS-S, some simple statistical terms are defined—

- **Accuracy.** Accuracy is how close a measurement or a group of measurements are in relation to a true or known value.
- **Precision.** Precision is how close a group or sample of measurements are to each other. For example, a low standard deviation indicates high precision. A survey or group of measurements can have a high precision but a low accuracy (for example, measurements are close together but not close to the known or true value).
- **Standard deviation.** The standard deviation is a range of how close the measured values are from the arithmetic average. A low standard deviation indicates that the observations or measurements are close together.

ADJUSTMENT CONSIDERATIONS

8-207. Although vertical elevations are necessarily carried through the baseline reduction and adjustment process, the relative accuracy of these elevations is normally inadequate for engineering and construction purposes. Special procedures and constraints are necessary to determine approximate orthometric elevations from relative GPS observations.

8-208. The baseline-reduction process provides the raw relative-position coordinates that are used in a 3D GPS-network adjustment. In addition, and depending on the software, each reduced baseline will contain various orientation parameters, covariance matrices, and cofactor and/or correlation statistics that may be used in weighting the final network adjustment. Most least-squares adjustments use the accuracy or correlation statistics from the

baseline reduction; however, other weighting methods may be used in a least-squares or approximate adjustment.

8-209. The adjustment procedure employed (and the time devoted to it) must be commensurate with the project's accuracy requirements. Care must be taken to prevent the adjustment process from becoming a project in itself. There is no specific requirement for performing a rigorous least-squares adjustment on topographic surveys, whether conventional, GPS, or mixed observations. Traditional approximate-adjustment methods may be used in lieu of the least-squares method and will provide comparable, practical accuracy results.

8-210. Commercial software packages designed for high-order geodetic-densification surveys often contain a degree of statistical sophistication that is unnecessary for engineering survey-control densification (for example, second-order or less). The distinction between geodetic surveying and engineering surveying must be fully considered when performing GPS-S adjustments and analyzing the results.

8-211. Connections and adjustments to existing control networks, such as the NGRS, must not become independent projects. It is far more important to establish dense and accurate local-project control than to consume resources tying into first-order NGRS points that are miles from the project. Engineering, artillery, construction, and property/boundary referencing requires consistent local control with high relative accuracy. Accurate connections/references to distant geodetic datums are of secondary importance (exceptions are projects in support of military aviation operations). GPS-surveying technology has provided a cost-effective means of tying previously established, poorly connected projects to the NGRS and simultaneously transforming the project to the newly defined NAD 83. In adjusting these connections, do not distort or warp long-established project reference points.

SURVEY ACCURACY

8-212. The accuracy of a survey (whether performed using conventional or GPS methods) is a measure of the difference between observed and true values (such as, coordinates, distance, or angle). Since the true values are rarely known, only estimates of survey accuracy can be made. These estimates may be based on the internal observation closures (such as on a loop traverse) or connections with previously surveyed points assumed to have some degree of reliability.

8-213. GPS internal accuracies are typically far superior to most previous control networks (including the NAD-83 NGRS). Therefore, determining the accuracy of a GPS-S based on misclosures with external points is not always valid unless statistical-accuracy estimates (for example, station variance-covariance matrices or distance/azimuth relative accuracy estimates) from the external network's original adjustments are incorporated into the closure analysis for a new GPS-S.

8-214. Most survey specifications and standards classify accuracy as a function of the resultant relative accuracy between two usually adjacent points in a network. This resultant relative accuracy is estimated from the

statistics in an adjustment and is defined by the size of a 2D or 3D relative error ellipse formed between the two points. Relative distance-, azimuth-, or elevation-accuracy specifications and classifications are derived from this model and are expressed either in absolute values (for example, ±1.2 centimeters or ±3.5 inches) or as ratios of the propagated standard errors to the overall length (for example, 1:20,000).

INTERNAL ACCURACY

8-215. A loop traverse that originates and ends from a single point will have a misclosure when observations (for example, EDM traverse angles/distances or GPS-baseline vectors) are computed forward around the loop and back to the starting point. The forward-computed misclosure provides an estimate of the relative or internal accuracy of the observations in the traverse loop, or more directly, the internal precision of the survey. This is perhaps the simplest method of evaluating the adequacy of a survey. These point misclosures (usually expressed as ratios) are not the same as relative distance accuracies).

8-216. Internal-accuracy estimates made relative to a single fixed point are obtained when free, unconstrained, or minimally constrained adjustments are performed. In the case of a single loop, no redundant observations (or alternate loops) back to the fixed point are available. When a series of GPS-baseline loops (or networks) are observed, then the various paths back to the single fixed point provide multiple position computations. This allows for a statistical analysis of the internal accuracy of not only the position closure but also the relative accuracies of the individual points in the network (including relative distance- and azimuth-accuracy estimates between these points). The magnitude of these relative internal-accuracy estimates (on a free adjustment) determines the adequacy of the control for subsequent design, construction, and mapping work.

8-217. Loop traverses are not recommended for most conventional surveys due to potential systematic distance or orientation errors, which can be carried through the network undetected. FGCS classification standards for geodetic surveys do not allow traverses to start and terminate at a single point. Such techniques are unacceptable for incorporation into the NGRS network. However, due to many factors (primarily economic), loop traverses or open-ended spur lines are commonly employed in densifying project control for engineering and construction projects. Since such control is not intended for inclusion in the NGRS and usually covers limited project ranges, these practices have been acceptable for GPS-Ss that are performed in support of similar engineering and construction activities.

EXTERNAL ACCURACY

8-218. The coordinates (and reference orientation) of a single, fixed starting point will also have some degree of accuracy relative to the network in which it is located (such as the NGRS if it was established relative to the system/datum). This external accuracy (or inaccuracy) is carried forward in the traverse loop or network; however, any such external variance (if small) is generally not critical to engineering and construction projects. When a survey is conducted relative to two or more points on an existing reference network (such as project control or the NGRS), misclosures with these fixed control

points provide an estimate of the absolute accuracy of the survey. This analysis is usually obtained from a final adjustment (usually a fully constrained least-squares-minimization method) or by another recognized traverse-adjustment method (for example, a transit or a compass).

8-219. This absolute accuracy estimate assumes that the fixed (existing) control is superior to the survey being performed and that any position misclosures at connecting points are due to internal observational errors and not the existing control. This has always been a long-established and practical assumption and has considerable legal basis in property/boundary surveying. New work is rigidly adjusted to existing control regardless of known or unknown deficiencies in the fixed network.

8-220. Since the relative positional accuracies of points on the NGRS are known from the NAD-83 readjustment and GPS-baseline-vector accuracy estimates are obtained from individual reductions, variations in misclosures in GPS-Ss are not always due totally to errors in the GPS work. Forcing a GPS traverse/network to rigidly fit the existing (fixed) network usually results in a degradation of the internal accuracy of the GPS-S, as compared with a free or unconstrained adjustment.

INTERNAL VERSUS EXTERNAL ACCURACY

8-221. Conventional geodetic surveying is largely concerned with absolute accuracy or the best fit of intermediate surveys between points on a national control network, such as the NGRS. Alternatively, in engineering and construction surveying and to a major extent in relative- or local-boundary surveying, accuracies are more critical to the project at hand. Thus, the absolute NAD-27 or NAD-83 coordinates (in latitude and longitude) relative to the NGRS datum reference are of less importance; however, accurate relative coordinates for a given project are critical to design and construction.

8-222. For example, when establishing basic mapping and construction-layout control for a military installation, developing a dense and accurate internal relative-control network is far more important than considering the values of the coordinates relative to the NGRS. Surveys performed with GPS-S, and the final adjustment thereof, should be configured/designed to establish accurate relative (local) project control. This is of secondary importance in connection with NGRS networks.

8-223. Although reference connections with the NGRS are desirable and recommended and should be made where feasible and practicable, it is critical that such connections (and subsequent adjustments thereto) do not distort the internal accuracy of intermediate points from which design, construction, or project boundaries are referenced. Connections and adjustments to distant networks (for example, NGRS) can result in mixed datums within a project area, especially if not all existing project control has been tied in. This can lead to errors and contract disputes during both design and construction. On existing projects with long-established reference control, connections and adjustments to outside reference datums/networks should be performed with caution. The impacts on legal-property and project-alignment definitions must also be considered before such connections.

8-224. On newly authorized projects or on projects where existing project control has been largely destroyed, reconnection with the NGRS is highly recommended. This will ensure that future work is supported by a reliable and consistent basic network, while minimizing errors associated with mixed datums.

ADJUSTMENTS

8-225. GPS-Ss are usually adjusted and analyzed relative to their internal consistency and external fit with existing control. The internal-consistency adjustment (for example, free or minimally constrained) is important from a mission compliance standpoint. The final (or constrained) adjustment fits the GPS-S to the existing network. This is not always easily accomplished since existing networks often have lower relative accuracies than the GPS observations being fit. The evaluation of a survey's adequacy should not be based solely on the results of a constrained adjustment.

INTERNAL ADJUSTMENT

8-226. An internal (or geometric) adjustment (also referred to as a free adjustment) is made to determine how well the baseline observations close internally or fit within themselves. Other EDM distances or angles may also be included in the adjustment. This adjustment provides a measure of the internal precision of the survey.

8-227. In a simplified example, a conventional EDM traverse that is looped back to the starting point will misclose in both azimuth and position. Conventional approximate-adjustment methods will typically assess and proportionately adjust the azimuth misclosure (usually evenly per station), recompute the traverse with the adjusted azimuths, and obtain a position misclosure. This position misclosure (in X and Y) is then distributed among all the points on the traverse using various weighting methods (for example, distance, latitudes, or departures). Final-adjusted azimuths and distances are then computed from grid inverses between the adjusted points. The adequacy/accuracy of such a traverse is evaluated based on the azimuth misclosure and the position misclosure after the azimuth adjustment (usually expressed as a ratio to the overall length of the traverse).

8-228. A least-squares adjustment of the same conventional loop traverse will end up adjusting the points similarly to the approximate methods traditionally employed. The only difference is that a least-squares adjustment simultaneously adjusts both the observed angles (or directions) and the distance measurements. A least-squares adjustment also allows variable weighting to be set for individual angle/distance observations, which is a somewhat more complex process when approximate adjustments are performed. In addition, a least-squares adjustment will yield more definitive statistical results of the internal accuracies of each observation and/or point, rather than just the final closure. This includes estimates of the accuracies of individual station coordinates, relative azimuths, and relative distances.

8-229. A series of GPS baselines forming a loop off a single point can be adjusted and assessed similarly to a conventional-EDM traverse loop described above. The baseline-vector components may be computed

(accumulated) around the loop with a resultant 3D misclosure back at the starting point. These misclosures (in X, Y, and Z) may be adjusted using either approximate or least-squares methods. The method by which the misclosure is distributed among the intermediate points in the traverse is a function of the weighting adjustment.

8-230. In the case of a simple EDM traverse adjustment, the observed distances (or position corrections) are weighted as a function of the segment length and the overall traverse length or the overall sum of the latitudes/departures (transit rule). Two-dimensional EDM distance observations are not dependent on their direction (a distance's X and Y components are uncorrelated).

8-231. GPS-baseline-vector components (in X, Y, and Z) are correlated due to the geometry of the satellite solution (the direction of the baseline vector is significant). Since satellite geometry is continuously changing, remeasured baselines will have different correlations between the vector components. Such data are passed down from the baseline-reduction software for use in the adjustment.

8-232. The magnitude of the misclosure of the GPS-baseline vectors at the initial point provides an estimate of the internal precision or geometric consistency of the loop (survey). When this misclosure is divided by the overall length of the baselines, a relative internal-accuracy estimate results. This misclosure ratio should not be less than the relative distance accuracy intended for the survey. For example, if the position misclosure of a GPS loop is 0.08 meter and the length of the loop is 8,000 meters, then the loop closure is 0.08 divided by 8,000, which equals 1:100,000.

8-233. When an adjustment is performed, the individual corrections/adjustments made to each baseline (so-called residual errors) provide an accuracy assessment for each baseline segment. A least-squares adjustment can also provide relative distance-accuracy estimates for each line, based on the standard-error propagation between the adjusted points. This relative distance-accuracy estimate is most critical in engineering and construction work and represents the primary basis for assessing the acceptability of a survey.

EXTERNAL ADJUSTMENT

8-234. An external (or fully-constrained) adjustment is the process used to best fit the survey observations to the established reference system. The internal, free adjustment provides adjusted positions relative to a single, often arbitrary, fixed point. Most conventional or GPS-Ss are connected between existing stations on some predefined reference network or datum. These fixed stations may be existing project-control points (on NAD 27) or stations on the NGRS (NAD 83). In OCONUS locales, other local or regional reference systems may be used.

8-235. A simple, conventional-EDM traverse between two fixed stations best illustrates the process by which comparable GPS-baseline vectors are adjusted. As with the loop traverse, the misclosure in azimuth and position between the two fixed points may be adjusted by any type of approximate or least-squares-adjustment method. Unlike a loop traverse, however, the

azimuth and position misclosures are not wholly dependent on the internal errors in the traverse—the fixed points and their azimuth references are not absolute but contain relative inaccuracies with respect to one another.

8-236. A GPS-S between the same two fixed points also contains a 3D position misclosure. Due to positional uncertainties in the two fixed points, this misclosure may (and usually does) far exceed the internal accuracy of the raw GPS observations. As with a conventional-EDM traverse, the 3D misclosures may be approximately adjusted by proportionately distributing them over the intermediate points. A least-squares adjustment will also accomplish the same thing.

8-237. For example, if a GPS-S is looped back to the initial point, the free-adjustment misclosure at the initial point may be compared with the apparent-position misclosure at the other fixed point. A free-adjustment loop misclosure is 1:100,000, whereas the misclosure relative to the two network-control points is only 1:5,000. Thus, the relative internal accuracy of a GPS-S is about 1:100,000 (based on the misclosure). If the GPS-baseline observations are constrained to fit the existing control, the 0.6-meter external misclosure must be distributed among the individual baselines to force a fit between the two end points.

8-238. After a constrained adjustment, the absolute-position misclosure of 0.6 meter causes the relative distance accuracies between individual points to degrade. They will be somewhat better than 1:5,000 but far less than 1:10,000. The statistical results from a constrained least-squares adjustment will provide estimates of the relative accuracies between individual points on the traverse.

8-239. This example illustrates the advantages of measuring the baseline between fixed network points when performing GPS-Ss, especially when weak control is suspected. Also illustrated is the need for making additional ties to the existing network. In this example, one of the two fixed points was poorly controlled when it was originally established or the two points may have been established from independent networks (for example, were never connected). A third or even fourth fixed point would be beneficial in resolving such a case.

8-240. If the intent of the survey in this example was to establish 1:20,000 relative-accuracy control, connecting between these two points would not provide that accuracy, given the amount of adjustment that must be applied to force a fit. For example, if one of the individual baseline vectors was measured at 600 meters and the constrained adjustment applied a 0.09-meter correction in this sector, the relative accuracy of this segment would be roughly 1:6,666. This distortion is not acceptable for subsequent design/construction work.

8-241. Most GPS-S networks are more complex than a simple traverse. They may consist of multiple loops and may connect with any number of control points on the existing network. In addition, conventional EDMs and differential-leveling and angle measurements may be included with the GPS baselines, resulting in a complex network with many adjustment conditions.

PARTIALLY CONSTRAINED ADJUSTMENTS

8-242. In the previous example of a simple GPS traverse, holding the two network points rigidly caused an adverse degradation in the GPS-S because of the differences between the free (loop) adjustment and the fully constrained adjustment. Another alternative is to perform a partially constrained adjustment of the network. In a partially constrained adjustment, the two network points are not rigidly fixed but are only partially fixed in position. Partially constrained adjustments are not practicable using approximate-adjustment methods.

8-243. For example, if the relative distance accuracy between the two fixed points is about 1:10,000, it can be equated to a positional uncertainty between these points. Depending on the type and capabilities of the least-squares-adjustment software, the higher-accuracy GPS-baseline observations can be best fit between the two end points, such that the end points of the GPS network are not rigidly constrained to the original two control points but end up falling near them.

8-244. Adjustment software allows relative weighting of the fixed points to provide a partially constrained adjustment. Any number of fixed points can be connected, and these points may be given partial constraints in the adjustment. Performing partially constrained adjustments (as opposed to fully constrained adjustments) takes advantage of the inherent higher-accuracy GPS data relative to the existing network control. Less warping of the GPS data (due to poor existing networks) will occur.

8-245. A partial constraint also lessens the need for performing numerous trial-and-error constrained adjustments in attempts to locate poor external control points causing high residuals. Fewer ties to the existing network are needed if the purpose of such ties is to find a best fit on a fully constrained adjustment.

8-246. When connections are made to NAD 83, relative accuracy estimates of NGRS stations can be obtained from the NGS. Depending on the type of adjustment software, these partial constraints may be in the form of variance-covariance matrices, error ellipses, or circular accuracy estimates.

RIGOROUS LEAST-SQUARES ADJUSTMENT

8-247. Adjustment of GPS networks on PCs is typically a trail-and-error process for both the free and the constrained adjustments. When a least-squares adjustment is performed on a network of GPS observations, the adjustment software will provide 2D- or 3D-coordinate accuracy estimates, variance-covariance matrix data for the adjusted coordinates, and related error-ellipse data. Most software programs provide relative accuracy estimates (length and azimuth) between points. Analyzing these various statistics is not easy, and they are also easily misinterpreted. Arbitrary rejection and readjustment to obtain a best fit must be avoided. The original data-reject criteria must be established and justified in a final report.

8-248. When a series of loops are formed relative to a fixed point or off another loop, different redundant conditions are formed (this is comparable to loops formed in conventional-differential leveling networks). These different

loops allow forward baseline-vector position computations to be made over different paths. From the different routes (loops) formed, different positional closures at a single fixed point results. These variances in position misclosures from the different routes provide additional data for assessing the internal consistency of the network, in addition to checking for blunders in the individual baselines. The number of different paths, or conditions, is partially related to the number of degrees of freedom in the network.

8-249. Multiple baseline observations provide additional redundancy or strength to a line or network since they are observed at two distinct times of varying satellite geometry and conditions. The amount of redundancy required is a function of the accuracy requirements of the survey. Performing a free adjustment on a complex network containing many redundancies is best performed using a least-squares method. Approximate-adjustment methods are difficult to evaluate when complex interweaving networks are involved.

8-250. Baseline-reduction vector-component error statistics are usually carried down into a least-squares adjustment; however, their use is not mandatory for lower-order engineering surveys. GPS-network least-squares adjustments can be performed without all the covariance and correlation statistics from the baseline reduction.

8-251. In practice, any station on the network can be held fixed for all three coordinates, along with the orientation of the three axes and a network-scale parameter. Usually one of the higher-order points on the existing network is used.

8-252. Least-squares-adjustment software will output various statistics from the free adjustment to assist in detecting blunders and residual outliers in the free adjustment. Most commercial packages will display the normalized residual for each observation (for example, GPS, EDM, angle, or elevation), which is useful in detecting and rejecting residual outliers. The variance of unit weight is also important in evaluating the overall adequacy of the observed network. Other statistics (such as chi-square, confidence levels, or histograms) are usually not significant for lower-order engineering projects and become totally insignificant if the user is not well versed in statistics and adjustment theory. The use of these statistics to reject data (or to report the results of an adjustment) without fully understanding their derivation and source within the network adjustment is not advised.

8-253. Relative positional- and distance-accuracy estimates resulting from a free adjustment of a GPS network are usually excellent in comparison to conventional surveying methods. Loop misclosures and relative distance accuracies between points commonly exceed 1:100,000. Relative distance-accuracy estimates between points in a network are determined by error propagation in the relative positional standard errors at each end of the tie. Relative accuracy estimates may be derived for resultant distances or azimuths between the points. The relative distance-accuracy estimates are those typically employed to assess the free and constrained accuracy classifications, expressed as a ratio (such as 1:80,000). Since each point in the network has its particular position variances, the relative distance accuracy propagated between any two points will also vary throughout the network.

8-254. The minimum value (or the largest ratio) will govern the relative accuracy of the overall project. This minimum value (from a free adjustment) is compared with the intended relative accuracy classification of the project to evaluate compliance. However, relative distance-accuracy estimates should not be rigidly evaluated over short lines (less than 500 meters).

8-255. Depending on the size and complexity of the project, large variances in the propagated relative distance accuracies can result. When a constrained adjustment is performed, the adequacy of the external fixed stations will have a major impact on the resultant and propagated distance accuracies, especially when connections are made to weak control systems. Properly weighted, partially constrained adjustments will usually improve the propagated distance accuracies.

8-256. The primary criteria for assessing the adequacy of a particular GPS-S is the relative distance-accuracy results from a minimally constrained free adjustment, not a fully constrained adjustment. This is due to the difficulty in assessing the adequacy of the surrounding network. If the propagated relative accuracies fall below the specified level, then reobservation is warranted.

8-257. If the relative distance accuracies significantly degrade the constrained adjustment (due to the inadequacy of the surrounding network), any additional connections to the network would represent a change in contract scope. A large variance of unit weight usually results in such cases.

8-258. If only approximate adjustments are performed, then the relative distance accuracies may be estimated as a function of the loop or position misclosure or the residual corrections to each observed length. For example, if a particular loop or line miscloses by 1:100,000, then individual-baseline relative accuracies can be assumed to be adequate if only a 1:20,000 survey is required.

8-259. Most adjustment software will output the residual corrections to each observed baseline-vector component. These residuals indicate the amount that each segment was corrected in the adjustment. A least-squares adjustment minimizes the sum of the squares of these baseline residual corrections.

8-260. Commercial least-squares-adjustment software is available, which will adjust GPS networks using standard PCs. An example of an adjustment statistics summary from the software package used by Army topographic surveyors is shown in *Figure 8-8, page 8-64*.

8-261. Relative GPS-baseline standard errors can be obtained from the baseline-reduction output and in some software programs can be directly input into the adjustment. These standard errors, along with their correlations, are given for each vector component (X, Y, and Z). They are converted to relative weights in the adjustment. The following typical input (a priori) weighting is commonly used:

- **Fixed.** ±3 millimeters (latitude) ±5 millimeters (longitude) + 1 ppm ±10 millimeters (height) + 1 ppm.
- **Float.** ±6 millimeters (latitude) ±10 millimeters (longitude) + 2 ppm ±10 millimeters (height) + 2 ppm.

```
                ADJUSTMENT STATISTICS SUMMARY
                NETWORK = Belvoir
                TIME = Mon Oct 20 20:20:26 1997


                          ADJUSTMENT SUMMARY


                 Network Reference Factor = 0.88
                 Chi-Square Test (α = 95%) = PASS
                        Degrees of Freedom = 105.00


                     GPS OBSERVATIONS
                         Reference Factor = 0.88
                                        r = 105.00

GPS Solution    1 Reference Factor =    1.11   r =  2.83
GPS Solution    2 Reference Factor =    0.37   r =  1.90
GPS Solution    3 Reference Factor =    1.41   r =  [illegible]4
GPS Solution    4 Reference Factor =    1.58   r =  [illegible]7
GPS Solution    5 Reference Factor =    0.[illegible]0   r =  1.87
GPS Solution    6 Reference Factor =    1.93   r =  2.92
GPS Solution    7 Reference Factor =    0.70   r =  1.88
GPS Solution    8 Reference Factor =    0.55   r =  2.42
GPS Solution    9 Reference Factor =    0.84   r =  2.82

GPS Solution   47 Reference Factor =    0.51   r =  2.71
GPS Solution   48 Reference Factor =    0.71   r =  2.97

                         WEIGHTING STRATEGIES:

     GPS OBSERVATIONS:
          Scalar Weighting Strategy:
User-Defined Scalar Set  Applied Globally =  11.50


          No summation weighting strategy was used

          Station Error Strategy:
H.I. error = 0.0020
```

Sample

```
                Esc=EXIT        ↑↓=SCROLL        PgUp        PgDn
                COORDINATE ADJUSTMENT SUMMARY
                NETWORK = Belvoir
                TIME = Mon Oct 20 20:20:26 1997


Datum = WGS-84
Coordinate System = Geographic
Zone = Global

Network Adjustment Constraints:
  Inner constraints in y
  Inner constraints in x
  Inner constraints in H


POINT   NAME      OLD COORDS        ADJUST       NEW COORDS          1.96σ

   1 DTP4
         LAT=  38° 41' 23.839155" +0.000007"  38° 41' 23.839163"    0.002593m
         LON=  77° 08' 03.890845" +0.000017"  77° 08' 03.890828"    0.002305m
      ELL HT=             6.7551m   +0.0062m             6.7613m    0.005981m
    ORTHO HT=             0.0000m   +0.0000m             0.0000m    NOT KNOWN

   2 FB09
         LAT=  38° 41' 42.126953" -0.000003"  38° 41' 42.126950"    0.002604m
         LON=  77° 08' 42.414329" -0.000003"  77° 08' 42.414331"    0.002182m
      ELL HT=             5.1959m   +0.0008m             5.1967m    0.005981m
    ORTHO HT=             0.0000m   +0.0000m             0.0000m    NOT KNOWN
```

Figure 8-8. Continuation of an Adjustment Statistics Summary Example

These optimum standard errors have been found to be reasonable in standard work where extremely long baselines are not involved. The use of these optimum values is recommended for the first adjustment iteration.

8-262. The adequacy of the initial network weighting described above is indicated by the variance of unit weight, which equals the square of the standard error of unit weight. The variance of unit weight should range between 0.5 and 1.5 (or the standard error of unit weight should range between 0.7 and 1.2) with an optimum value of 1, signifying the realistic weighting of the GPS-input observations. A large unit variance (for example, 5) indicates that the initial GPS standard errors were too optimistic (low). A low unit variance (for example, 0.1) indicates that the results from the adjustment were better than the assumed GPS-baseline precisions. This unit-variance test, however, is generally valid only when a statistically significant number of observations are involved. This is a function of the number of degrees of freedom shown on the adjustment. To calculate the adequacy of a unit weight, a test (such as chi-square) is performed. Failure of such a test indicates that the variance factor may not be valid.

8-263. The input standard errors can easily be juggled to obtain a variance of unit weight near 1. This trial-and-error technique is generally not a good practice. If the input weights are changed, they should not be modified beyond reasonable levels (for example, do not input a GPS standard error of ±50 + 50 ppm to get a good unit variance). If input standard errors are modified, these modifications should be the same for all lines, not just selected ones. Any such modifications of a priori standard errors must be justified in the adjustment report.

8-264. Changing the magnitude of the input standard errors or weights will not change the adjusted position or residual results in a free adjustment, provided all weight changes are made equally. Although the reference variance will change, the resultant precisions (relative line accuracies) will not change (this is not true in a constrained adjustment). Therefore, the internal accuracy of a survey can be assessed based on the free-adjustment line accuracies regardless of the initial weighting or variance of unit weight.

8-265. The magnitude of the residual corrections may be assessed by looking for blunders or outliers; however, this assessment should be performed in conjunction with the related, normalized- or standardized-residual statistic. This statistic is obtained by multiplying the residual by the square root of the input weight (the inverse of the square of the standard error). If the observations are properly weighted, the normalized residuals should be around 1. Most adjustment software will flag normalized residuals that exceed selected statistical outlier tests. Such residuals are candidates for rejection. As a rule of thumb, reject criterion should be set at three times the standard error of unit weight, provided that the standard error of unit weight is within the acceptable range given above. All rejected GPS observations must be justified in the adjustment report, and the test used to remove the observation from the file must be clearly described.

8-266. Error ellipses, or 3D error ellipsoids, generated from the adjustment variance-covariance matrices for each adjusted point are also useful in depicting the relative positional accuracy. The scale of the ellipse may be

varied as a result of the 2-deviation function. A 2.45 sigma (or 95 percent) probability ellipse is usually selected for output. The size of the error-ellipse's relative distance or the azimuth-accuracy estimate between two adjacent points is a direct function of the size of these positional ellipses.

8-267. The relative distance accuracy is used to evaluate the acceptability of a survey. This is done using a free adjustment. The output is shown as a ratio or in ppm. The resultant ratios must be divided by 2 to equate them to FGCS 95 percent criteria. Further details on these statistical evaluations are beyond the scope of this manual.

8-268. The following is a summary of a network-adjustment sequence (recommended by the NGS) for surveys that are connected with the NGRS:

- A minimally constrained 3D adjustment is performed initially as a tool to validate the data, to check for blunders and systematic errors, and to look at the internal consistency of the network.
- A horizontally constrained 3D adjustment is performed by holding all previously published horizontal-control points fixed and using one height constraint. All previous observations are considered in the adjustment.
- A fully constrained vertical adjustment is performed to determine the orthometric heights. All previously published BM elevations are held fixed along with one horizontal position in a 3D adjustment. Geoid heights are predicted using the latest model.
- A final free adjustment is performed and the relative accuracy estimates are computed.

EVALUATION OF ADJUSTMENT RESULTS

8-269. A survey shall be classified based on its horizontal-point closure ratio or its vertical-elevation-difference closure standard *(Table 8-7)*.

HORIZONTAL-CONTROL STANDARDS

8-270. The horizontal-point closure is determined by dividing the linear-distance misclosure of the survey into the overall circuit length of a traverse, loop, or network line/circuit. When independent directions or angles are observed (for example, a conventional survey [traverse or triangulation]), these angular misclosures may be distributed before assessing positional misclosure. In cases where GPS vectors are measured in geocentric coordinates, the 3D positional misclosure is assessed.

Approximate Surveying

8-271. Approximate surveying is classified based on the survey's estimated or observed positional errors. This includes absolute GPS and some DGPS techniques with positional accuracies ranging from 10 to 150 feet (2-deviation RMS). There is no order of classification for approximate work.

Table 8-7. Point-Closure Standards for Horizontal- and Vertical-Control Surveys

Horizontal	
Classification	**Point-Closure Standard (Ratio)**
Second order, Class I	1:50,000
Second order, Class II	1:20,000
Third order, Class I	1:10,000
Third order, Class II	1:5,000
Fourth order (construction layout)	1:2,500 - 1:20,000
Vertical	
Classification	**Point-Closure Standard (mm)**
Second order, Class I	$6\sqrt{\text{distance in km}}$
Second order, Class II	$8\sqrt{\text{distance in km}}$
Third order	$12\sqrt{\text{distance in km}}$
Fourth order (construction layout)	$24\sqrt{\text{distance in km}}$

High-Order Surveys

8-272. Requirements for relative line accuracies exceeding 1:50,000 are rare for most applications. Surveys requiring accuracies of first-order (1:100,000) or better, should be performed using FGCS standards and specifications and must be adjusted by the NGS.

Construction Layout or Grade Control (Fourth-Order)

8-273. This classification is intended to cover temporary control used for alignment, grading, and measurement of various types of construction and some local site-plan topographic-mapping or photo-mapping control work. Accuracy standards will vary with the type of construction. Lower accuracies (1:2,500 to 1:5,000) are acceptable for earthwork, dredging, grading, and some site-plan stakeouts. Moderate accuracies (1:5,000) are used in most pipelines, sewers, culverts, catch basins, and manhole stakeouts; general residential-building foundation and footing construction; major highway pavement; and concrete-runway stakeouts. Somewhat higher accuracies (1:10,000 to 1:20,000) are used for aligning longer bridge spans, tunnels, and large commercial structures. For extensive bridge or tunnel projects, 1:50,000 (or even 1:100,000) relative-accuracy alignment work may be required. Vertical grade is usually observed to the nearest 0.005 meter for most construction work, although 0.04-meter accuracy is sufficient for riprap placement, grading, and small-diameter-pipe placement. Construction control points are typically marked by semipermanent or temporary monuments (for example, plastic hubs, nails, or wooden grade stakes). Control may be established by short, nonredundant spur shots, using total stations or the GPS, or by single traverse runs between two existing, permanent control points. Positional accuracy will be commensurate with, and relative to, that of the existing point(s) from which the new point is established.

VERTICAL-CONTROL STANDARDS

8-274. The vertical accuracy of a survey is determined by the elevation misclosure within a level section or level loop. For differential or trigonometric leveling, section or loop misclosures (in millimeters) shall not exceed the limits shown in *Table 8-7, page 8-67*, where the line or circuit length is measured in kilometers. Fourth-order accuracies are intended for construction-layout grading work. Procedural specifications or restrictions pertaining to vertical-control surveying or equipment should not be over restrictive.

FINAL-ADJUSTMENT REPORTS

8-275. A variety of free- and/or constrained-adjustment combinations may be specified for a GPS-S. Specific stations to be held fixed may be indicated, and when they are partially constrained, appropriate statistical information must be provided. Either variance-covariance matrices or relative positional-accuracy estimates may be converted as approximate variance-covariance matrices in the constrained adjustment. All rejected observations will be clearly indicated, along with the criteria and the reason used for the rejection.

8-276. When different combinations of constrained adjustments are performed due to indications of one or more fixed stations causing undue biasing of the data, an analysis should be made as to a recommended solution that provides the best fit for the network. Any fixed control points that should be readjusted to anomalies from the adjustment(s) should be clearly indicated in a final recommendation.

8-277. The final-adjusted horizontal- and/or vertical-coordinate values are assigned an accuracy classification based on the adjustment statistical results. This classification should include the resultant geodetic or Cartesian coordinates and the baseline-differential results. The final-adjusted coordinates should state the 95 percent confidence region of each point and the accuracy in ppm between all points in the network. The datum will be clearly identified for all coordinate listings.

8-278. Final-report coordinate listings may be required on hard copy as well as specified computer media. A scaled plot should be submitted with the adjustment report showing the proper locations and designations of all stations established.

Chapter 9

Artillery Surveys

Topographic-engineer companies are the primary source of topographic support throughout the echelons above corps (EAC) and GS. Topographic companies support artillery surveys by—

- Extending horizontal and vertical control into the corps and division areas.
- Providing a survey planning and coordination element (SPCE) in support of the EAC.
- Providing mapping-survey control where required.
- Advising on topographic matters.
- Assisting in lower-level surveys to augment FA surveys.

This chapter defines topographic-survey-operation terms for precise positioning and orientation at division, corps, EAC, and joint-level commands for support of FA and ADA. The accuracy, timeliness, and distribution of positioning and orientation information and organic equipment are also addressed.

US ARMY FA

9-1. The FA is a primary user of precise-positioning and -orientation information in a wartime environment. Topographic-survey support must be provided to MLRS units, corps's GS units, and other nondivisional assets in the corps area. The FA requires that topographic surveyors—

- Establish and recover monumented SCPs (horizontal and vertical) and azimuthal references for conventional and inertial FA survey teams.
- Coordinate the exact position of the high-order control with the corps's survey officer.
- Augment FA survey sections when appropriate.

ACCURACY

9-2. Established SCPs provide the FA a horizontal, vertical, and azimuthal reference. The horizontal and vertical coordinates and the azimuthal reference station must satisfy FGCS standards and specifications for third-order conventional and satellite positioning.

FREQUENCY AND TIMELINESS

9-3. The FA requires that initial SCPs be established within 5 kilometers of division artillery (DIVARTY) and TA battery (TAB) surveyor's HQ. In addition, a common grid must be established for the AO and should include an

SCP and azimuthal reference every 30 kilometers. In a wartime scenario, SCPs and azimuthal references are to be established within 30 minutes of notification. Topographic surveyors are required to establish third-order SCPs for the beginning and ending points for each PADS traverse used by MLRS and FA units. The distance interval between these SCPs should be 25 to 30 kilometers throughout the division or the corps area. A precise GPS-S is the only expedient way to emplace third-order SCPs over this distance. The number of SCPs that a topographic survey must provide for the EAC and corps areas depend on the dispersion, the amount of movement, and the commander's priorities. For example, on the basis of five to seven moves per day, 10 to 20 SCPs will be required every 24 hours to support EAC and corps FA systems that the DIVARTY cannot support.

DISTRIBUTION

9-4. The coordinates that topographic surveyors establish for the FA should be disseminated to the SPCE. The SPCE is the FA's counterpart to a SIC. SPCEs will be located at HQ and HQ battery (HHB) DIVARTY, corps, brigade, and MLRS battalions. If the SPCE is not in operation, the survey information should be distributed to the operations section S3 or the Assistant Chief of Staff, G3 (Operations and Plans) (G3) of the highest element (battalion, brigade, division, or corps). NIMA is many years away from publishing all maps on the WGS 84, therefore, the commander must be aware of all datums within the AO. Topographic surveyors are responsible for notifying the SPCE or the appropriate operations section of the various datums within the AO. In addition, topographic surveyors should provide the SPCE with the necessary parameters required to transform local coordinates to the predefined common grid (for example, WGS 84). Since paper map products will not be on a common datum (WGS 84) for many years, it is imperative that topographic surveyors identify these local datum and provide the FA with the necessary transformation parameters. Since map sheets may be on various local datums (for example, Bosnia, Hungry, or Saudi Arabia), the forward observers (FOs) and the weapon may be on a separate datum. The coordinate differences between datums may be hundreds of meters and positional differences may cause friendly-fire casualties or missed targets.

ADA

9-5. The ADA requires positioning and orientation information. The ADA and the FA have agreed that FA surveyors (MOS 82C) will provide the ADA with survey support, to include the following:

- **Accuracy.** The ADA's positional and orientation accuracies are the same as the FA requirements.
- **Frequency and timeliness.** Three SCPs per Patriot battalion for area defense and two SCPs per Patriot battalion for forward-area defense must be established. The number of SCPs and the timeliness is dependent on the battlefield and the mission.
- **Distribution.** This control information should be distributed to the highest echelon SPCE and the Patriot-battalion S3.

SURVEY PLANNING

9-6. The maneuver commander initiates the requirement for survey planning (reference FM 6-2) by issuing guidance to the fire-support (FS) coordinator (FSCOORD). This guidance states the scheme of maneuver, the rate of movement, the anticipated enemy threat, and the critical phases of the battle.

ARTILLERY COMMANDER OR FSCOORD

9-7. The FSCOORD analyzes the commander's guidance to determine the need for passing of target information, for having first-round fire-for-effect accuracy, and for massing of fires. The FSCOORD weighs the analysis against the ability to adjust fires, complete registration missions, and engage targets from new position areas. This begins the concept for a survey plan to provide common survey control.

9-8. The FSCOORD must extract from the maneuver commander's guidance all information that allows visualization of the survey requirements for FS assets. The FSCOORD can gain most of the information by reviewing the scheme of maneuver, the rate of movement, the effects required on high-payoff targets, and the accuracy requirements for TA sensors. He must also determine whether it is more important to have survey support at the guns or at the TA assets first.

9-9. Each artillery commander is responsible for establishing common control throughout his AO. The FSCOORD must disseminate to the appropriate artillery battalion HQ the established accuracy requirements in survey terms. Additional requirements or guidance derived by the FSCOORD must also be communicated. This should be done through face-to-face coordination or through the S3. The survey officer must be included in this coordination and should advise the FSCOORD and/or the S3 on the current survey capabilities and limitations.

CORPS'S ARTILLERY SURVEY-PLANNING AND COORDINATING OFFICER

9-10. The corps's artillery survey-planning and coordinating officer (SPCO) is responsible for the following:

- Knowing the survey requirements and capabilities of all corps units *(Figure 9-1, page 9-4)*.
- Coordinating with the corps's Assistant Chief of Staff, G2 (Intelligence) (G2) to get intelligence estimates of the proposed work areas. These work areas should include—
  - Enemy activity.
  - Friendly forces.
  - Other optional constraints.
- Coordinating with the corps's G3 to get the following information for planning and coordinating intelligence and electronic-warfare (IEW) systems that require survey support *(Figure 9-2, page 9-5*, shows a corps survey-plan overlay).
  - Positions of the corps's artillery units (current and planned).
  - Unit-movement plans.

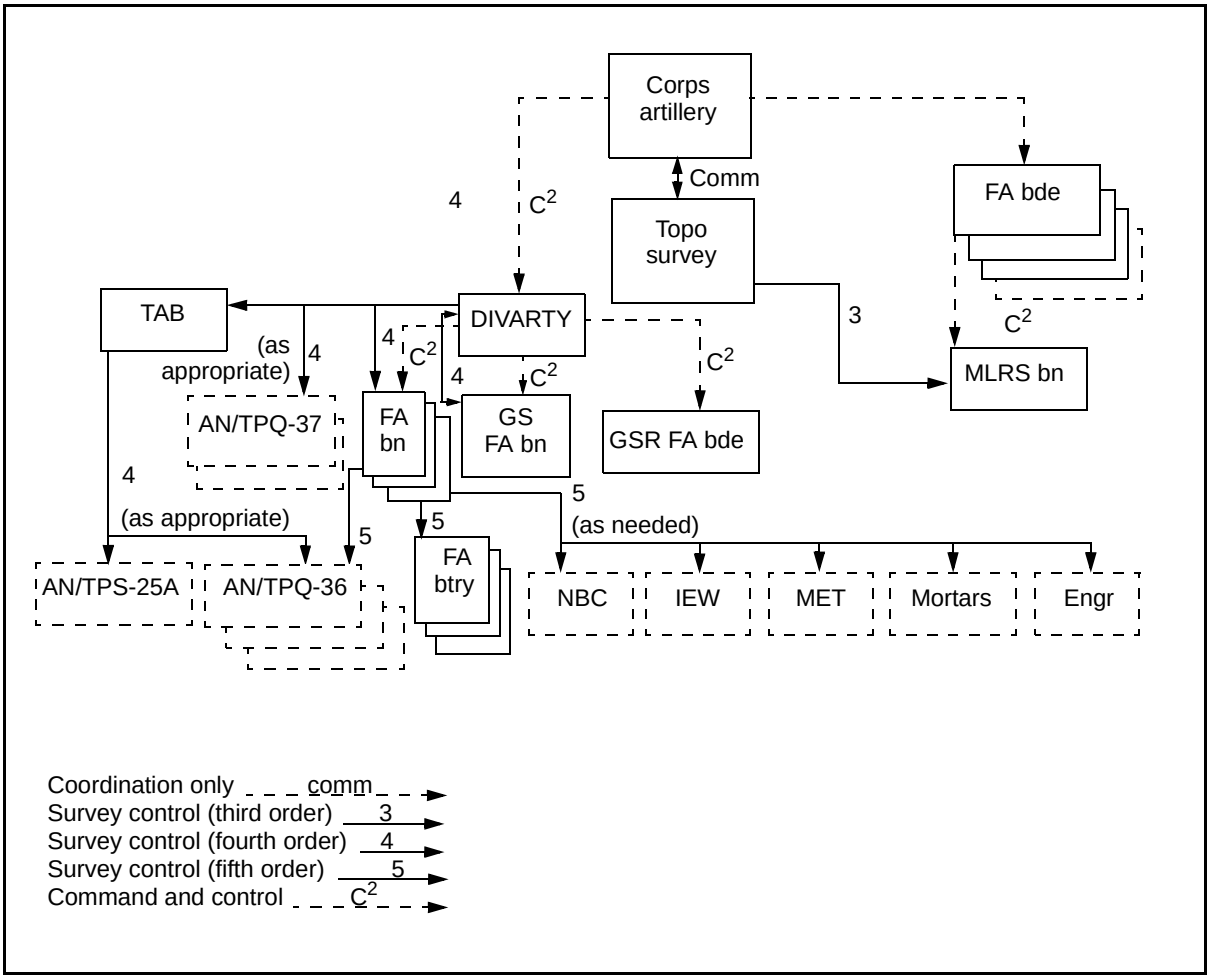

Figure 9-1. Survey Requirements and Capabilities of Corps Units

- Dates and times of movement.
- Priority of unit movement.

- Making contact with the engineer topographic battalion's survey section and obtaining necessary details from the commander (for example, the attached platoon, the location of company SPCE, and the POCs). The engineer topographic battalions' survey section supports the FA and the ADA with third-order horizontal and vertical control points and azimuth marks for the division through the EAC and separate artillery brigades on a 24-hour basis. A topographic survey augments an FA survey with the information required for the following:
  - EAC (two SCPs per Patriot battalion).
  - Corps area (eight SCPs each 24-hour period and one SCP per DIVARTY or separate brigade each 24-hour period).
  - PADS (starting and closing SCPs are provided at a maximum interval of 25 kilometers).

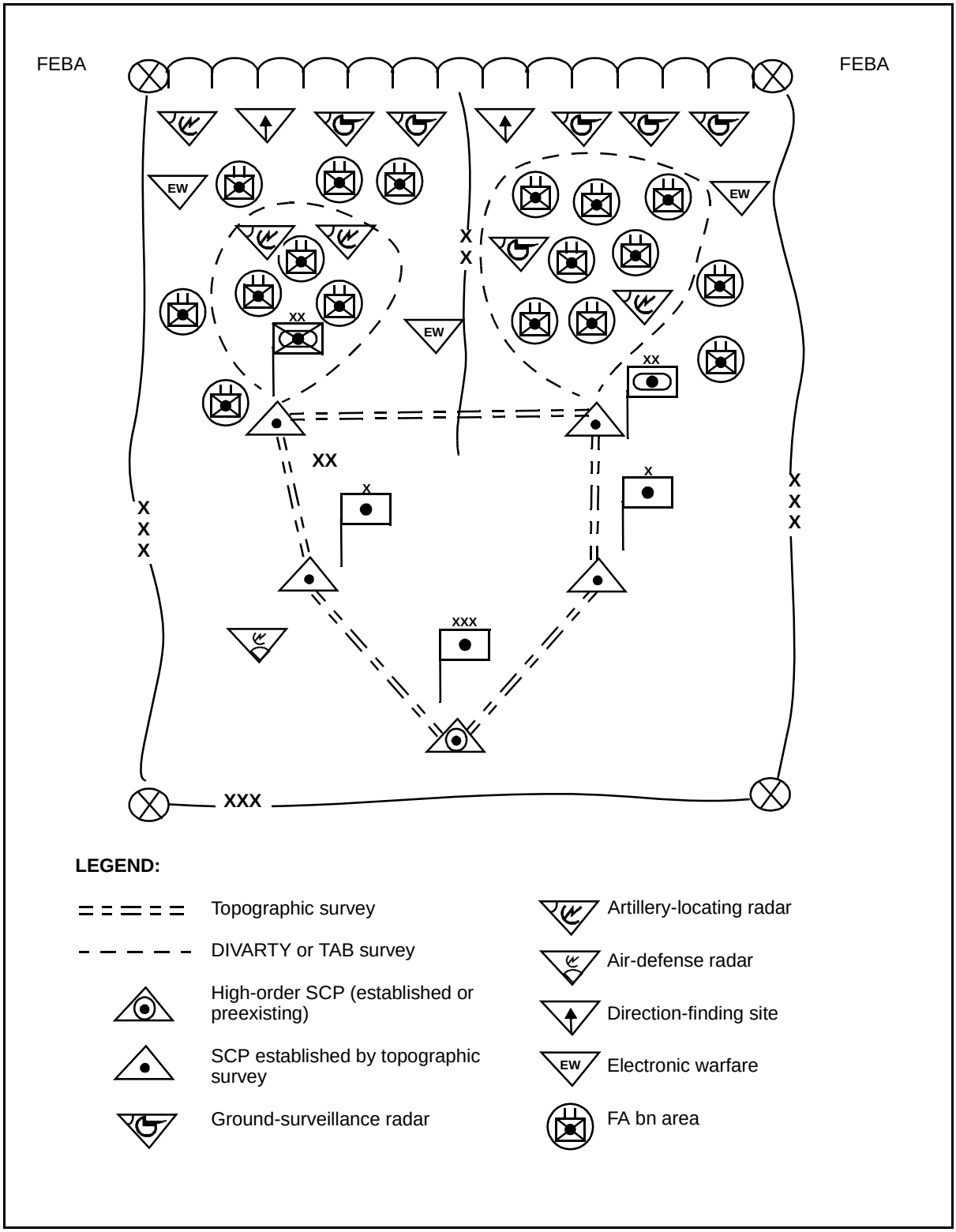

Figure 9-2. Corps Survey-Plan Overlay

  - MLRS (starting and closing SCPs are provided at a maximum interval of 30 kilometers).
- Making necessary arrangements with the corps's HQ and HQ company (HHC) for administrative and logistical support of the topographic survey platoon.
- Arranging and coordinating with the corps's aviation company for support if requested by the survey-section leader of the engineer topographic company.
- Maintaining a close working relationship with the topographic-survey-platoon leader, the corps's artillery units' survey officers, and the DIVARTY survey officers. This coordination ensures a timely three-way flow of information concerning survey operations and data collection. It also enhances the timely completion of the survey mission.

Chapter 10

Airfield-Obstruction and NAVAID Surveys

This chapter acquaints Army surveyors with the terminology and the requirements for airfield-obstruction and NAVAID surveys. The content is general in nature due to the vast differences in airfield instrumentation, customer requirements, and FAA regulations.

AIRPORT OBSTRUCTION CHARTS AND NAVAID SURVEYS

10-1. AOCs and NAVAID surveys are extensive field or photogrammetric operations that are required by agreement between the FAA and the USAASA and are specified in AR 95-2. Airfield-obstruction and NAVAID surveying operations involve obtaining accurate and complete NAVAID and associated airport/heliport-obstruction and geodetic-positioning data. A precise geographic position of these navigational facilities is required to support the FAA and a wide range of NAS activities. AOC surveys provide source information on—

- Runways and stopways.
- NAVAIDs.
- FAR-77 obstructions.
- Aircraft-movement aprons.
- Prominent airport buildings.
- Selected roads and other traverse ways.
- Cultural and natural features of landmark value.
- Miscellaneous and special-request items.

10-2. AOC surveys also establish or verify geodetic control in the airport vicinity that is accurately connected to the NSRS. This control and the NSRS connection ensure accurate relativity between these points on the airport and other surveyed points in the NAS, including GPS navigational satellites. AOC data is used to—

- Develop instrument-approach and -departure procedures.
- Determine maximum takeoff weights.
- Certify airports for certain types of operations.
- Update official aeronautical publications.
- Provide geodetic control for engineering projects related to runway/taxiway construction, NAVAID positioning, obstruction clearing, and other airport improvements.
- Assist in airport planning and land-use studies.
- Support activities such as aircraft-accident investigations and special projects.

FAA AND FAR STANDARDS

10-3. FAA Publication 405 (FAA 405) and FAR-77 outline the requirements for AOC surveys. Various areas, surfaces, reference points, dimensions, and specifications used in airfield surveys are described below.

RUNWAYS

10-4. All length and width measurements are determined to the nearest foot. If the runway's threshold is displaced, the distance (in feet) is given from the beginning of the runway's surface. Determine the coordinates (latitude and longitude) of the runway's threshold and stop end at the runway's centerline. Elevations at the runway's threshold, stop end, and highest elevation (within the first 3,000 feet of each runway touchdown zone elevation [TDZE]) should be determined to the nearest 0.1 foot from the MSL. In addition, prepare runway profiles that show the elevations listed above, the runway's high and low points, grade changes, and gradients. Determine the elevation of a point on the instrumented runway's centerline nearest to the instrument landing system (ILS) and the glide-path transmitter to the nearest 0.1-foot MSL.

NAVAIDS

10-5. Airports requiring airfield-obstruction and NAVAID surveys are instrumented runways. The exact point on the radar, the reflectors, the runway intercepts, and the ILS and microwave-landing-system (MLS) components depend on the survey type, the location, and the required accuracy. The requirement to verify the existing ILS/MLS, their proper description, and all components on or near the runway is mandatory. Obtain information for locating and describing all airfield features with help from airfield-operation, maintenance-section, and control-tower personnel. The following NAVAIDs are located on airports:

- ILS.
- MLS.
- Precision approach radar (PAR).
- Airport surveillance radar (ASR).

10-6. The following NAVAIDs are not located on airports:

- Tactical air navigation (TACAN).
- VHF omnidirectional range (VOR).
- Nondirectional beacon (NDB).
- VOR and TACAN (VORTAC).

OBSTRUCTIONS

10-7. An obstruction is an object or feature protruding through or above any navigational imaginary surface that poses a threat to the safe operation of aircraft. Navigational imaginary surfaces or obstruction identification surfaces (OISs) are defined in FAR-77. In the following paragraphs are some definitions, along with some samples.

FAR-77, Section 77.28, Military-Airport Imaginary Surfaces *(Figure 10-1 and Figure 10-2, page 10-4)*

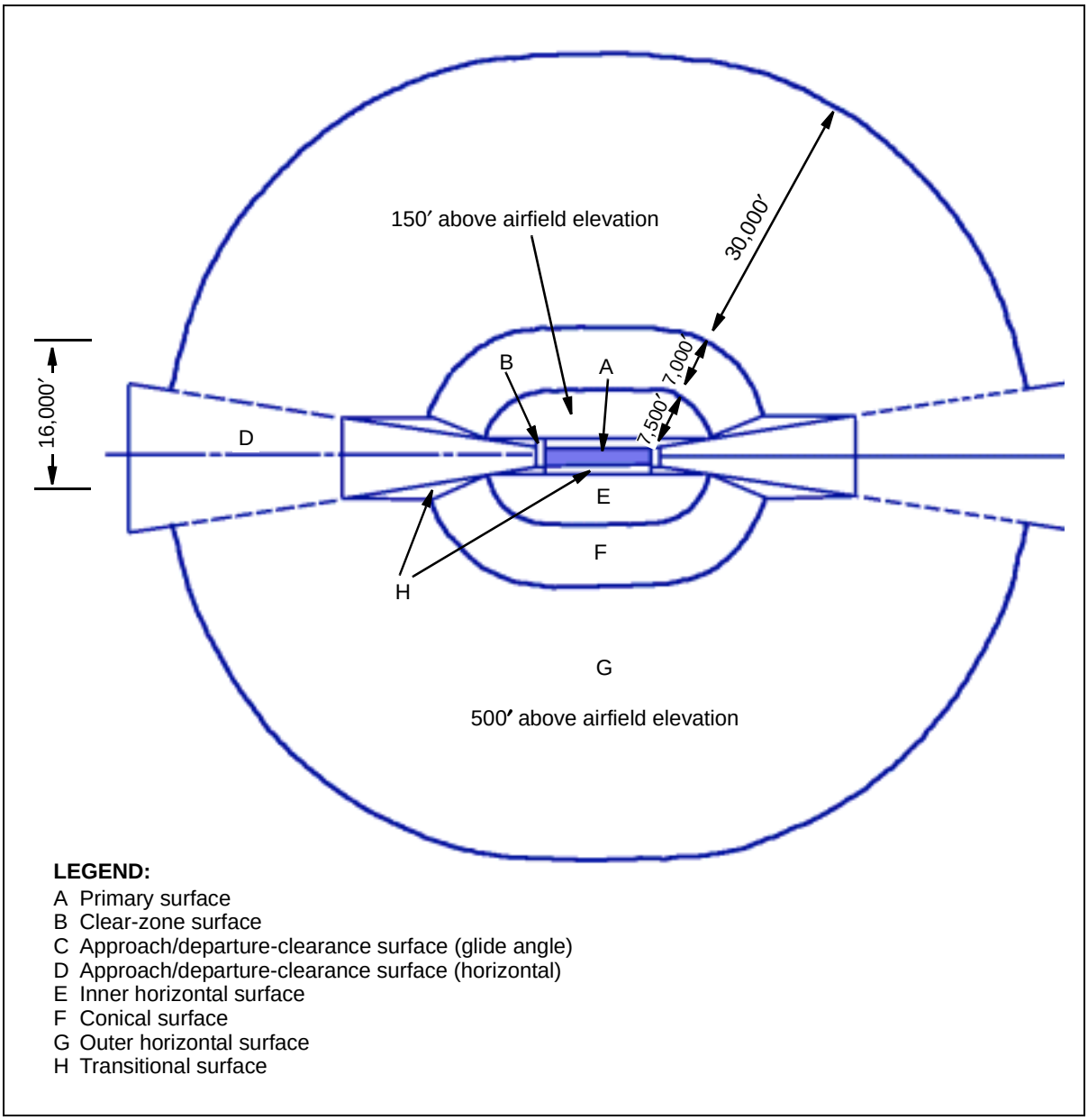

Figure 10-1. General Plan View of an OIS

10-8. **Related to airport reference points (ARPs).** These surfaces apply to all military airports. For the purpose of this section, a military airport is any airport operated by an armed force of the US.

- **Inner horizontal surface.** An oval plane that is at a height of 150 feet above the established airfield elevation. The plane is constructed by scribing an arc with a radius of 7,500 feet from the

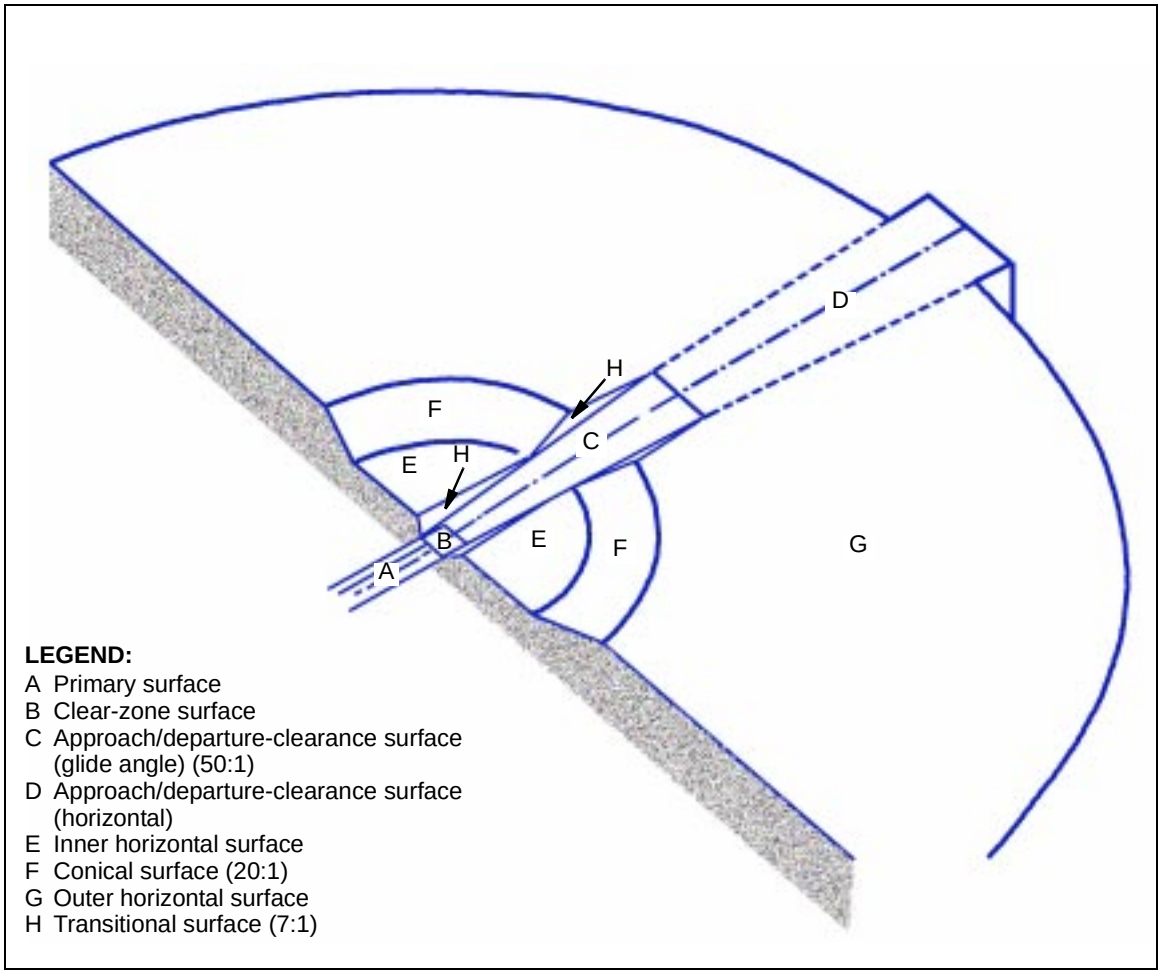

Figure 10-2. Partial Plan View of an OIS

centerline at the end of each runway and interconnecting these arcs with tangents.

- **Conical surface.** A surface extending from the periphery of the inner horizontal surface outward and upward at a slope of 20:1 for a horizontal distance of 7,000 feet to a height of 500 feet above the established airfield elevation.
- **Outer horizontal surface.** A plane that is located 500 feet above the established airfield elevation, extending outward from the outer periphery of the conical surface for a horizontal distance of 30,000 feet.

10-9. **Related to runways.** These surfaces apply to all military airports.

- **Primary surface.** A surface located on the ground or on water, longitudinally centered on each runway, and the same length as the runway. The width of the primary surface for runways is 2,000 feet. However, at established bases where substantial construction has

taken place according to previous lateral-clearance criteria, the 2,000-foot width may be reduced to the former criteria.

- **Clear-zone surface.** A surface located on the ground or on water at each end of the primary surface. The clear-zone surface is 1,000 feet long and is the same width as the primary surface.
- **Approach/departure-clearance surface.** An inclined plane that is located symmetrical from the extended runway's centerline, beginning 200 feet beyond each end of the primary surface at the centerline elevation of the runway's end and extending for 50,000 feet *(Figure 10-3, page 10-6)*. The slope of the approach-clearance surface is 50:1 along the extended runway's centerline until it reaches an elevation of 500 feet above the established airport elevation. The surface then continues horizontally at this elevation to a point 50,000 feet from the beginning point. The width of this surface at the runway's end is the same as the primary surface, then it flares uniformly and the width at 50,000 feet is 16,000 feet.
- **Transitional surfaces.** These surfaces connect the primary surfaces, the first 200 feet of the clear-zone surfaces, and the approach/departure-clearance surfaces to the inner horizontal surface, the conical surface, the outer horizontal surface, or other transitional surfaces. The slope of the transitional surface is 7:1 outward and upward at right angles to the runway's centerline.

FAR-77, Section 77.29, Airport Imaginary Surfaces for Heliports

10-10. These surfaces apply to all military heliports. For the purpose of this section, a military heliport is any heliport operated by an armed force of the US.

- **Heliport's primary surface.** The primary surface coincides in size and shape with the designated takeoff and landing area of a heliport. This surface is a horizontal plane at the elevation of the established heliport elevation.
- **Heliport's approach surface.** The approach surface begins at each end of the heliport's primary surface, is the same width as the primary surface, and extends outward and upward for a horizontal distance of 4,000 feet where its width is 500 feet. The slope of the approach surface is 8:1 for civil heliports and 10:1 for military heliports.
- **Heliport's transitional surfaces.** These surfaces extend outward and upward from the lateral boundaries of the heliport's primary surface and from the approach surfaces at a slope of 2:1 for a horizontal distance of 250 feet from the centerline of the primary and approach surfaces.

FAR-77, Section 77.5, Kinds of Objects Affected

10-11. This section further defines an obstruction and applies to—

- Any object of natural growth, the terrain, permanent or temporary construction or alterations (including equipment or materials used therein), and apparatus of a permanent or temporary character.

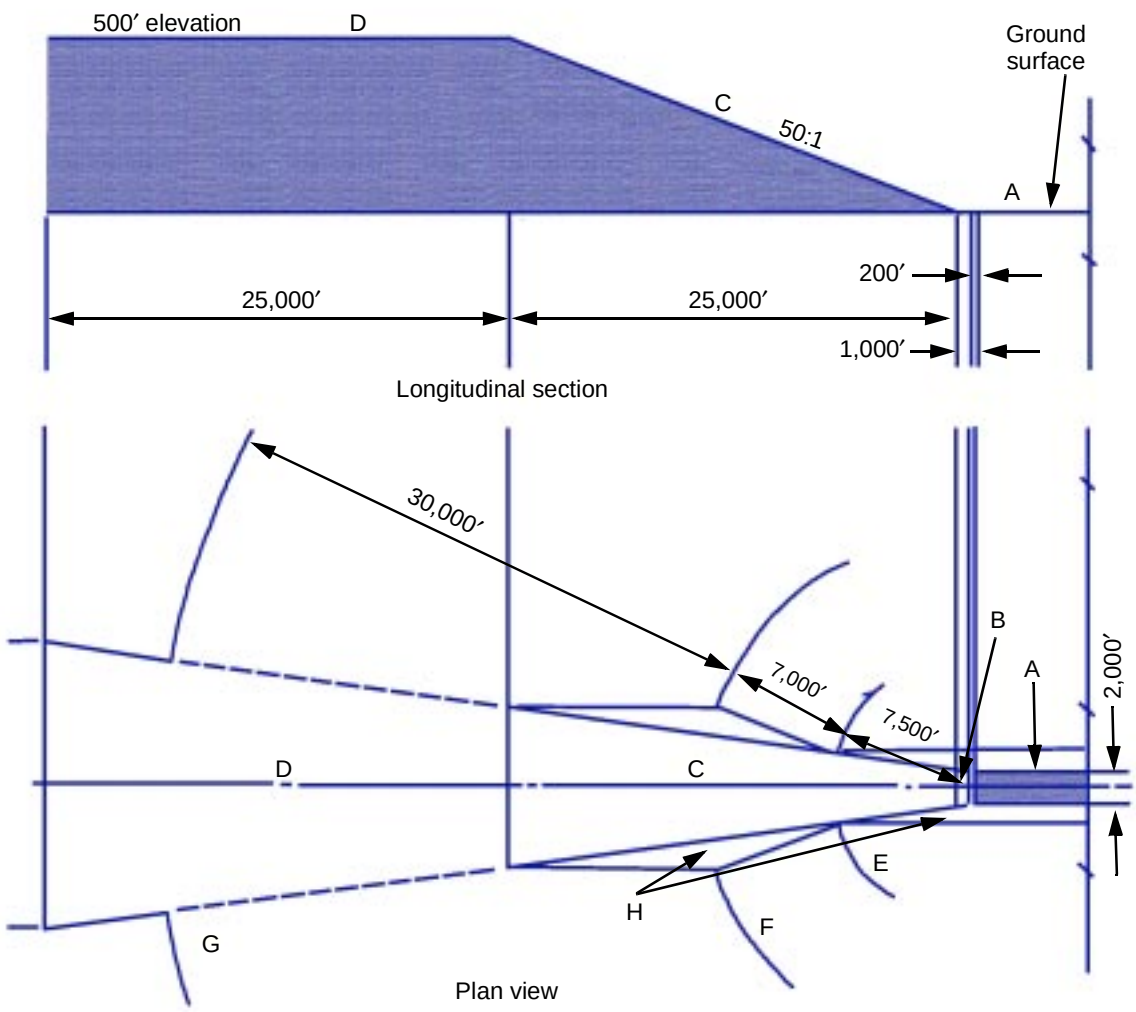

LEGEND:
A Primary surface
B Clear-zone surface
C Approach/departure-clearance surface (glide angle)
D Approach/departure-clearance surface (horizontal)
E Inner horizontal surface
F Conical surface
G Outer horizontal surface
H Transitional surface

Figure 10-3. Plan and Profile View of the Approach/Departure OIS

- Any permanent or temporary existing structure altered by a change in its height (including appurtenances) or lateral dimensions (including equipment or materials used therein).

DATA

10-12. The ARP location (in longitude and latitude) will be determined according to FAA 405. Field elevation is the highest point on any airport landing surface.

AIRFIELD-DATA ACCURACY REQUIREMENTS

10-13. All contiguous CONUS-, Alaskan-, and Caribbean-area coordinates should be determined based on NAD 83 and/or WGS 84. Geodetic accuracy of orthometric heights are referenced to NAVD 88. The coordinates for the points on the airport require different degrees of accuracy. *Tables 10-1 and 10-2* and *Tables 10-3 through 10-5, page 10-8*, are examples of different accuracy standards for airfield data. FAA 405 contains the complete requirements. The horizontal accuracy requirements can be met through third-order, Class II traverse, GPS, or two-point intersection techniques. The vertical accuracy requirements dictate a minimum of third-order differential-leveling techniques.

Table 10-1. Airport-Obstruction Accuracy Requirements

Item		Horizontal (ft)	Orthometric (ft)	Ellipsoidal (ft)	Above Ground Level (ft)
Non-man-made objects and man-made objects less than 200 feet above ground level that penetrate the OISs.	A primary surface.	20	3	3	NA
	Those areas of an approach surface within 10,200 feet of the runway's end.	20	3	3	NA
	Those areas of a primary transitional surface within 500 feet of the primary surface.	20	3	3	NA
	Those areas of an approach/ departure surface that are both within 500 feet of the approach surface and within 2,766 feet of the runway's end.	20	3	3	NA

Table 10-2. Visual-NAVAID Accuracy Requirements

Item	Horizontal (ft)	Orthometric (ft)	Ellipsoidal (ft)	Above Ground Level (ft)
Airport beacon	(1)	NA	NA	NA
Visual glide-slope indicators	20	NA	NA	NA
Runway end identifier lights (REILs)	20	NA	NA	NA
Approach lights	20	NA	NA	NA
NOTE: The horizontal accuracy requirement for items coded "(1)" is 20 feet when located on a public-use airport or military airfield and 50 feet for all other locations.				

Table 10-3. Control-Station Accuracy Requirements

Item	Horizontal (cm)	Orthometric (cm)	Ellipsoidal (cm)	Above Ground Level (cm)
Primary airport control station (PACS)[1]	5	25.0	15	NA
Secondary airport control station (SACS)[2]	3	5.0	4	NA
Wide-Area Augmentation System (WAAS) reference station[1]	5	10.0	10	NA
WAAS reference station[3]	1	0.2	2	NA

[1]Accuracies are relative to the nearest NGS-sanctioned continuously operating reference station.
[2]Accuracies are relative to the PACS and the SACS at the airport.
[3]Accuracies are relative to the other WAAS reference station at the site.

Table 10-4. Electronic-NAVAID Accuracy Requirements

Item	Horizontal (ft)	Orthometric (ft)	Ellipsoidal (ft)	Above Ground Level (ft)
Air-route surveillance radar (ARSR)	(1)	100	100	NA
ASR	(1)	10	10	NA
DME:				
Frequency paired with localizer	1	1	1	NA
Frequency paired with MLS azimuth guidance	1	1	1	NA
Frequency paired with NDB	(1)	NA	NA	NA
Frequency paired with VOR	(1)	NA	NA	NA

NOTE: The horizontal accuracy requirement for items coded "(1)" is 20 feet when located on a public-use airport or military airfield and 50 feet for all other locations.

Table 10-5. Airport-Runway Accuracy Requirements

Item	Horizontal (ft)	Orthometric (ft)	Ellipsoidal (ft)	Above Ground Level (ft)
Physical end	1	0.25	0.2	NA
Displaced threshold (DT)	1	0.25	0.2	NA
TDZE	NA	0.25	0.2	NA
Supplemental profile points	20	0.25	0.2	NA

REPORTING

10-14. The required reporting for airfield surveys is not significantly different from that required for other survey operations. The parent unit will normally require all of the reports listed in Chapter 11 of this manual. In addition to these routine reports, a special report (according to ARs 95-1 and 95-2, FAA 405, and FAR-77) will be required for the submission of the final data. For quick reference, the required documentation is listed below.

AOC

10-15. An AOC is a 1:12,000-scale graphic depicting FAR-77 guidance. An AOC represents objects that penetrate airport imaginary surfaces, aircraft movement and apron areas, NAVAIDs, prominent airport buildings, and a selection of roads and other planimetric detail in the airport vicinity. Also included are tabulations of runway and other operational data. AOC data is current as of the date of the field survey. The AOC consists of four sections:

- Airport plan (AP).
- Runway plans and profiles (RPP).
- Tabulated operational data (TOD).
- Notes and legends (NL).

10-16. Each section (all contents and the general format) should conform to the sheet style (obstruction chart [OC] 000) represented in FAA 405. An AOC is published on E50 chart paper (or equivalent) with border dimensions of 30 x 42 or 30 x 48 inches. The long dimension may be either in the north-south or east-west direction and should have a ¾-inch space between the border and the trim line. If the AP and the RPP will not fit on the front of the chart, the RPP is printed on the back.

Airport Plan

10-17. The depiction of the AP depends on the surface type and whether an obstruction survey was accomplished. A detailed explanation of what pertinent information to depict is included in FAA 405, Section 10.1.3. For example, an AP for a specially prepared hard surface (SPHS) runway will include the following information:

- Runway's length and width.
- DTs.
- The physical end of the runway.
- Airport elevation.
- TDZE.
- Magnetic bearing.
- Runway numbers.
- Obstructions.
- NAVAIDs.
- Meteorological apparatus.
- ARP.

Runway Plans and Profiles

10-18. A detailed explanation of what information to depict is included in FAA 405, Section 10.1.4. The RPP should include the following:

- Proper angular orientation.
- A horizontal scale of 1:12,000 and a vertical scale of 1 inch equal to 100 feet.
- Adequate area of coverage of the primary and approach surfaces.
- A plan view of the runway as shown on the AP.
- A profile view of objects carried in the plan view.
- A profile view of objects penetrating the approach surfaces.

- The correct approach surface or precise-instrument-runway (PIR) surface.
- The correct numbering scheme of objects in the profile.
- A north arrow.

NOTE: A PIR has an existing instrument-approach procedure that uses an ILS or a PAR. PIR also refers to a runway for which a precision approach system is planned and is so indicated by an FAA-approved airport layout plan, a military-airport layout plan, any other FAA planning document, or a military-airport planning document.

Tabulated Operational Data

10-19. The TOD should show the following:

- The airport location point (ALP) listed in degrees and minutes.
- The ARP listed in degrees, minutes, and three-decimal-place seconds.
- A runway data table with runway numbers, appropriate latitude and longitude coordinates, and TDZEs.
- Geodetic azimuth from the approach end to the stop end, reckoned from the north.
- Additional information pertaining to runways with DTs.

Notes and Legends

10-20. A detailed explanation of what pertinent information to depict is included in FAA 405, Section 10.1.6. The NL should include the following:

- Horizontal datum.
- Vertical datum.
- Map projection.
- Airport elevation.
- A legend.
- Graphic horizontal and vertical scales.

FORMS

10-21. In addition to the AOC, each airfield report requires completion of the following forms:

- DA Form 5821-R.
- DA Form 5822-R.
- DA Form 5827-R.

10-22. An airfield compilation report (DA Form 5821-R) *(Figure 10-4)* is a tabulation of all the information obtained from the survey. *Table 10-6, page 10-12*, includes instructions for completing this form.

10-23. PAR or ground-controlled-approach (GCA) data is entered on DA Form 5822-R. The completion of this form is self-explanatory *(Figure 10-5, page 10-13)*.

10-24. ILS data is entered on DA Form 5827-R *(Figure 10-6, page 10-14)*. The completion of this form is self-explanatory.

Airfield Compilation Report

For use of this form, see FM 3-34.331; the proponent agency is TRADOC.

SURVEY AGENCY: 30th Engineer Battalion					
AIRPORT NAME McCoy Army Airfield				IDENTIFIER CMY	
CITY Fort McCoy		STATE Wisconsin	EDITION #1		SURVEY DATE Oct 1986
AIRPORT REFERENCE POINT	ARP	LATITUDE 43°57′33.458″N	LONGITUDE 90°44′14.641″W		Δ CL OR Θ ANGLE -01°34′15.6″
AIRPORT LOCATION POINT		LATITUDE	LONGITUDE		DECLINATION
AIRPORT ELEVATION (In feet) 837.3 MSL	LOCATED EOR 01			CONTROL TOWER FLOOR ELEVATION (In feet) 871.2 MSL	
DATUM WGS-84			POSITION CODE – 1. Field Survey 2. Photogrammetric 3. Other		

AIRPORT DATA	ELEVATION	LATITUDE	LONGITUDE	YR-CODE	REMARKS	OFFICE CODE
NDB (CMY)	1,020.1	43°56′16.1″N	90°38′30.3″W	86/01		
Windsock (1)	860.4	43°57′35.7″N	90°43′58.5″W	86/01		
Beacon (13)	896.4	43°57′14.5″N	90°44′05.8″W	86/01		
WDI	845.8	43°57′35.7″N	90°43′58.1″W	86/01		
Tetrahedron	834.7	43°57′36.1″N	90°43′58.4″W	86/01		
Control Tower (9)	911.6	43°57′22.5″N	90°44′05.9″W	86/01		
Maltese Cross #1	830.5	43°57′30.8″N	90°43′59.7″W	86/01		
Maltese Cross #2	829.8	43°57′26.4″N	90°44′15.9″W	86/01		
Maltese Cross #3	832.9	43°57′22.8″N	90°43′51.6″W	86/01		

RUNWAY	DSPLCD THR LENGTH	RWY END ELEVATION	LATITUDE	LONGITUDE	WIDTH / LENGTH	GEODETIC AZ. (N) / MAG. BEARING (N)	OFFICE CODE
EOR 29 TDZE	NA	831.8	43°57′27.478″N	90°43′48.699″W	100.00 4,211.00	292°09′26.2″ 290°58′26.2″	
EOR 11	NA	822.4	43°57′43.164″N	90°44′42.017″W	75.00 4,211.00	112°09′25.8″ 110°58′25.8″	
TDZE 11/29	NA	829.5	43°57′32.027″N	90°44′03.899″W	NA	NA	
EOR 19	NA	824.7	43°57′44.922″N	90°44′08.802″W	90.00 2,962.90	195°25′26.5″ 194°14′26.5″	
EOR 01	NA	837.3	43°57′16.715″N	90°44′19.574″W	90.00 2,962.90	15°25′27.3″ 14°14′27.3″	
EOR 01 DT	1,326.7	835.7	43°57′04.089″N	90°44′24.408″W	50.00 1,326.70	NA	

DA Form 5821-R, AUG 89

Figure 10-4. Airfield Compilation Report

Table 10-6. Instructions for Completion of DA Form 5821-R

Block Name	Instruction
Survey agency	The agency conducting the field survey.
Airport name	The official airport name as determined by the FAA.
Identifier	The airport location-identifier designator as listed in FAA Publication 7350.5-V.
City	Self-explanatory.
State	Self-explanatory.
Edition	The number of times the airfield has been surveyed by the agency listed in the survey-agency block. Identify the original survey as 1 and subsequent surveys as 2, 3, and so on.
Survey date	The year of declination.
ARP	The physical location of the ARP.
ARP latitude	Self-explanatory.
ARP longitude	Self-explanatory.
Delta azimuth or theta angle	The grid convergence for the ARP.
ALP	The physical location of the ALP.
ALP latitude	Self-explanatory.
ALP longitude	Self-explanatory.
Declination	The magnetic declination of the ARP.
Airport elevation (ft)	See the glossary.
Located	A short narrative description (include the latitude and the longitude).
Control-tower floor elevation (ft)	Self-explanatory.
Airport data	Object or airfield feature observed (use additional sheets as required).
Elevation	Self-explanatory.
Airport-data latitude	Self-explanatory.
Airport-data longitude	Self-explanatory.
Year code	The year and month surveyed (for example, April 87 is written 8704).
Remarks	Self-explanatory.
Office code	Leave blank (may be used by other offices).
Runway	The numerical designation of the runway.
DT length	See the glossary.
Runway-end elevation	Self-explanatory.
Runway-end latitude	Self-explanatory.
Runway-end longitude	Self-explanatory.
Width/length	The physical width and length of the runway's surface.
Geodetic azimuth/ magnetic bearing	Self-explanatory.
Office code	Leave blank.

Precision Approach Radar (GCA) Data

For use of this form, see FM 3-34.331; the proponent agency is TRADOC.

AIRPORT NAME McCoy Army Airfield		
CITY 0r9McCoy	STATE 00o09	SURVEY DATE (Mo./Day/Year) 0999

PAR COMPONENTS AND PERTINENT RUNWAY DATA Numbered items correspond to the diagram below.	LATITUDE (1 / 100 Second)	LONGITUDE (1 / 100 Second)	ELEVATION (1 / 10 Foot)
1. PAR Antenna	9 ′9 ″	9 ′9 ″	9
2. Touchdown Reflector	9 ′9 ″	9 ′9 ″	9
3. The point on runway C/L closest to the Touchdown Reflector (Item 2).	9 ′9 ″	9 ′9 ″	9
4. Runway C/L End. 99	9 ′9 ″	9 ′9 ″	9
5. Runway C/L End.	9 ′9 ″	9 ′9 ″	9
6. The point on runway C/L closest to PAR Antenna.			
7. Displaced Threshold (If applicable).			

SAMPLE

PAR Antenna – Enter Numeral 1 in circle to indicate PAR Antenna Position.

Touchdown Reflector – Enter Numeral 2 in circle to indicate Touchdown Reflector.

PAR – GROUND DISTANCE			
3 to 7 FEET	1 to 6 FEET	2 to 3 FEET	GEODETIC AZIMUTH SOUTH
(If applicable)	3 to 6 FEET	3 to 4 FEET	4 to 5 ° ′ ″

ADD APPLICABLE NUMBERS TO CIRCLES AND RUNWAY ENDS. SHOW NORTH ARROW.

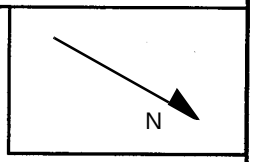

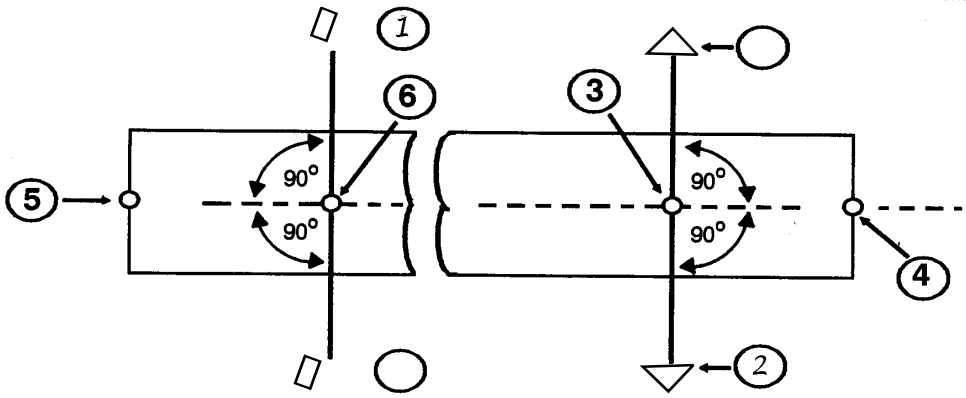

DA Form 5822-R, AUG 89

Figure 10-5. PAR Data

Instrument Landing System Data

For use of this form, see FM 3-34.331; the proponent agency is TRADOC.

AIRPORT NAME McCoy Army Airfield		
CITY Orlando	STATE Florida	SURVEY DATE (Mo./Day/Year) 0999

ILS COMPONENTS AND PERTINENT RUNWAY DATA Numbered items correspond to the diagram below.	LATITUDE (1 / 100 Second)	LONGITUDE (1 / 100 Second)	ELEVATION (1 / 10 Foot)
1. Localizer Antenna (Course Array): Point on ground beneath the localizer antenna.			
2. Glide Slope Indicator (GSI): Center of the base supporting the antenna.			
3. The point on runway C/L closest to the base of the Glide Slope Indicator Antenna (Item 2).			
4. Runway C/L End.	9 ′9	9 ′9 ″	9
5. Runway C/L End.	9 ′9 ″	9 ′9 ″	9
6. The point on runway C/L closest to the base of the offset Localizer (Case 2).			

MARKERS	LATITUDE (1 / 10 Second)	LONGITUDE (1 / 10 Second)	GROUND DISTANCE TO END OF RUNWAY
INNER OR B. C. MARKER (RUNWAY END)			feet
MIDDLE MARKER (RUNWAY END)			feet
OUTER MARKER (RUNWAY END)			feet

LOCALIZER – GROUND DISTANCE							
Case 1 (normal)		Case 2 (offset)					
1 to 5	FEET	1 to 6	FEET	2 to 3	FEET	GEODETIC AZIMUTH SOUTH	
		5 to 6	FEET	3 to 4	FEET	4 to 5	° ′ ″

ADD APPLICABLE NUMBERS TO CIRCLES AND RUNWAY ENDS. SHOW NORTH ARROW.

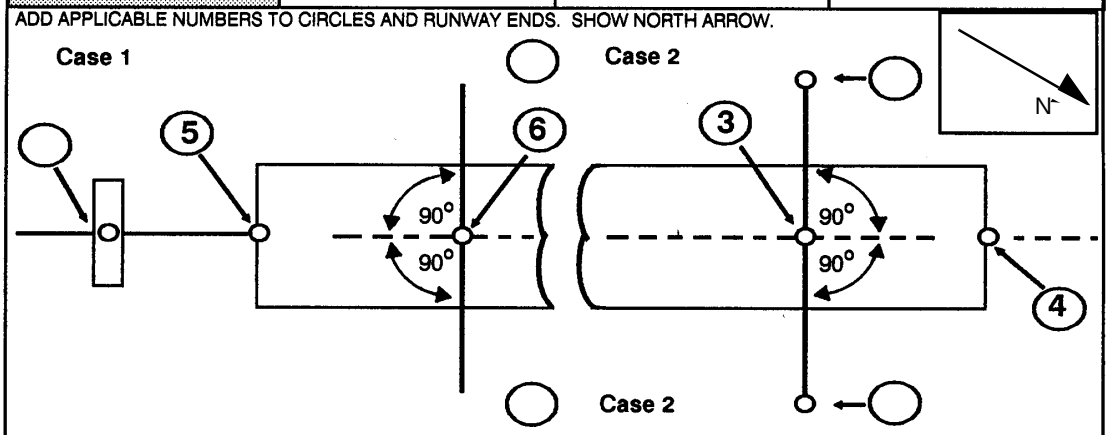

DA Form 5827-R, AUG 89

SAMPLE

Figure 10-6. ILS Data

Chapter 11

Reports, Briefings, and Operation Orders

All survey and survey-support activities must be documented. Additionally, unit commanders or visiting dignitaries have to be informed about the status of the project. The most common means of accomplishing these two tasks are reports and briefings. This chapter gives general guidance and recommended formats for these reports and briefings and for operation orders (OPORDs). This information is not intended to replace unit SOPs or official correspondence-preparation guidance but rather to supplement them and provide for a standardized procedure and format. Section III of this chapter includes a sample survey SOP and supporting annexes.

SECTION I - REPORTS

11-1. All reports should be treated as for official use only (FOUO) and safeguarded accordingly. In many instances, reports will be classified and appropriate safeguard measures are mandatory. All activities and events of a survey should be documented in a report. Reports can take many forms, and their primary uses are to—

- Provide documentation of the project.
- Serve as a historical record of accomplishment on problems.
- Inform commanders of project status.
- Provide information and data to planners and users.

GENERAL

11-2. All reports may not address each subject, but they will serve at least one of the above functions. A well-planned survey project can be broken down into phases. Each phase will require at least one report. These phases include—

- Initial site visitation.
- Field recon.
- Project execution.
- Compilation and computing.

11-3. In some situations, it may be convenient and practical to combine one or more of these phases and to prepare a consolidated report. Reports are prepared to provide information and should not be written just to fulfill a requirement.

ISVT REPORT

11-4. The initial site visitation is usually a preliminary visit that is used to gather general information. The information collected is generally used for logistical purposes. This does not mean that technical information is not gathered, but gathering information is not necessarily the primary function of the visit. The initial site visitation will normally be conducted by the survey-section leader and the project's noncommissioned officer (NCO). Depending on the nature of the project, the survey-platoon leader may also be included. In all cases, an ISVT report is required. A battalion or company SOP will usually designate the individual responsible for completing the report as well as the exact format to be used. Annex A of the sample survey SOP shows the format for an ISVT report. Any information that could be used at a later date should be included.

11-5. The report should be broken down into readily identifiable numbered and titled paragraphs as follows:

Paragraph 1. References. The project directive or technical OPORD (TECHOPORD) number.

Paragraph 2. Personnel. The name, rank, and telephone number of all personnel involved in the recon.

Paragraph 3. Key Personnel Contacts. The name, rank or position title, address, and telephone number of all key individuals contacted while conducting the visit. This paragraph is often combined with paragraph 2.

Paragraph 4. Objective. The objective of the ISVT.

Paragraph 5. Discussion. A discussion of exactly what occurred and what conversations took place (include only the most extensive). This paragraph will contain subparagraphs concerning logistical and technical information. All arrangements for lodging, food, medical, and other support must be listed and should include specific details. Any technical information should be listed; however, if extensive technical details are available, it may be advisable to include them in an appendix to the basic report. The key to the discussion paragraph is to list all information that is available. The report may be the only source of information for later activities on the project.

Paragraph 6. Recommendations. The specific recommendations for the conduct of the next phase of the project. These recommendations should include the number of personnel, the start date, and the tasks to be accomplished.

Paragraph 7. Funding. The fund citation. It may also specify the funds expended on the ISVT and any information concerning funding of the next phase of the project.

Paragraph 8. Work Hours. The total number of work hours broken down by rank. This information can be used for projecting the time required on similar future projects.

Paragraph 9. Equipment. The type of vehicles; the vehicles' identification numbers; the miles driven; and petroleum, oils, and lubricants (POL) information.

11-6. The report must always be signed. A standard military signature block should be used. Any required appendix(es) should be attached. A copy of the report should be included with the project folder and the original forwarded to the appropriate commander.

RECON REPORT

11-7. The recon report will typically be longer than the ISVT report. It should contain logistical and technical information. The recon report is broken down into three major sections—narrative, graphic, and control cards.

NARRATIVE

11-8. The narrative section is somewhat similar to the ISVT report. It contains much of the same type of information; however, it will be greatly expanded. Any information that could be used at a later date should be included. The report should be broken down into readily identifiable numbered and titled paragraphs (some of the subparagraphs may be deleted if they serve no purpose) as follows:

Paragraph 1. References. The project directive or order number. The ISVT report should be listed if available.

Paragraph 2. Personnel. The name, rank or position title, unit, and telephone number (both home station and remote site) of all personnel involved in the recon.

Paragraph 3. Key Personnel Contacts. The name, rank or position title, address, and telephone number of all personnel, offices, or agencies that were contacted during the recon (include military message addresses). This paragraph is extremely important for rights of way and access to private lands. Agreements made with landowners and/or property custodians should be listed, and a written permission document should be prepared and signed and a copy included as the last annex of the ISVT report.

Paragraph 4. Objective. The objective of the recon. It should be very specific and should include the nature of the recon (for example, triangulation, traverse, level, or plane table).

Paragraph 5. Discussion. A discussion of the project. This paragraph will typically be the longest and will normally be broken down into subparagraphs. All details must be listed and specified. The following subparagraphs should be included:

- **Administrative, legal, and logistical support.** A complete listing of all the support that has been arranged for the project. The list should include the following information:
  - **Medical facilities.** Identify the nearest military medical facility for routine medical problems and the nearest emergency medical facility.
  - **Lodging and mess facilities.** List the arrangements, location, and condition of the facilities if the military installation can provide lodging and messing. Indicate whether or not the use of the mess facilities will detract from the execution of the project.

- **Contracts.** Include copies of all legal contracts that authorize the surveyors' entrance onto private and other nonfederal land. Identify the POC at the JAG that coordinated or generated the documents in case future complications or disagreements occur.
- **Controlled areas.** List the requirements to be followed if the surveyors must enter secure or sensitive areas (classified equipment or systems). Provide the customer's security officer with the names and security classifications of the surveyors before starting the project. If the surveyors must be escorted, identify the primary escort and whether the surveyors can go into the controlled area at any time. Identify how access to the controlled areas will affect the scheme of extending survey control.
- **Morale factors.** List all arrangements that have been made for mail delivery, pay processing, and financial assistance.
- **Other logistic information.** List any additional support information that is required. MOAs for POL and other expendable supplies and vehicle-maintenance support should be included as annexes. Include coordination procedures for any secured area (for example, a fenced in area that is locked after duty hours).

- **Environmental factors.** Any environmental factors that could affect the project. These may include, but are not limited to, the following:
  - **Weather.** The expected weather conditions, to include long-range forecasts and normal weather patterns for the project area.
  - **Terrain.** The type of terrain to be expected and how it will affect access to existing and proposed SCPs. How landforms will affect intervisibility and the proposed survey scheme.
  - **Flora and fauna.** The types of plants and animals that inhabit the area. Particular attention should be given to poisonous plants and dangerous animals.
  - **Dangerous areas/restricted zones.** A brief description of the type and location of any dangerous areas or restricted zones. Annotate them on the overlay.
- **Technical information.** A listing of all work that was accomplished (for example, recovery, check angles, and check distances). It should also contain—
  - All proposed starting and ending stations and their conditions.
  - Line of sight information (also included in the graphic section).
  - The accuracy of the figures (if applicable).
  - Any other information of a technical nature that the field-survey party may need to know.
- **Source materials.** A complete list of all source materials (such as trig lists, data cards, map sheets, and overlays) and the agency or office of origin. A copy of these materials should be attached behind the station description cards.

Paragraph 6. Recommendations. Any recommendations (this paragraph will be lengthy and should be very detailed). It should include

recommendations that are based on sound technical principles that are within the capabilities of the unit. Include detailed information about the following:

- **Methods of survey.** The exact methods, procedures, and accuracy requirements.
- **Job estimates.** The estimated amount of personnel and time. Using this information, a cost estimate should be prepared and contained within this paragraph. If it is lengthy, include supporting data sheets as an annex.
- **Equipment.** The equipment required to do the job. This will normally be TOE-authorized equipment; however, in some cases, it may be necessary to obtain other equipment (for example, chain saws). Indicate how and where the equipment will be obtained (for example, a cement mixer from the Directorate of Public Works (DPW), Roads and Grounds Division).
- **Time schedule.** The project's time schedule (if the start date is known). For lengthy projects that must be broken down into phases, a milestone schedule should be developed and enclosed as an annex.

Paragraph 7. Funding. Funds expended during the recon. Also include information such as the fund citation and source.

Paragraph 8. Work Hours. The work hours expended (broken down by rank and activity performed [for example, POC meetings, POL and maintenance support, administrative requirements, and field recon]). This information will be helpful for planning and estimating similar future projects.

Paragraph 9. Equipment. A list of all the equipment used to conduct the recon. Include the types of vehicles, the vehicles' identification numbers, the miles driven, POL data, and any other equipment actually used by the recon party.

GRAPHIC

11-9. This section will usually take the form of overlays and/or maps. Use standard topographic and military symbols (as listed in FMs 21-31 and 101-5-1) when annotating overlays and maps. At a minimum, an overlay should contain the following information:

- Known, usable survey control stations (horizontal and vertical).
- Proposed survey stations.
- Dangerous areas and restricted zones. Show on the overlay and on all available maps.
- Other information that will assist the survey project. Include possible intersection stations that will be visible from several main-scheme stations.

CONTROL CARDS

11-10. This section should be a compilation of DA Forms 1958 and 1959 that were completed during the recon. The control cards must be complete, accurate, formatted correctly, and of high enough quality to permit them to be reproduced with minimal expenditure of time and labor.

PROGRESS REPORT

11-11. Progress reports are generally less formal than the other types of reports but are just as important. They are designed to keep the commander informed of progress. The time interval for progress reports will be established by the commander and included in the project directive. Normally, progress reports will be submitted weekly and, in some cases, daily verbal reports may be required. Progress reports may not be required for small projects.

VERBAL

11-12. A verbal report follows the same identical format as a written progress report. The sender and the receiver should have a copy of the premade format to follow. Only those lines that are applicable are filled in. The field copy is included in the project file for use in compiling a written weekly or end-of-project report.

WRITTEN

11-13. A written progress report normally includes a cover form and a data sheet. The data sheet is a fill-in-the-blank form. Those areas not applicable are left blank. All information must be as accurate as possible. The tendency to hold back production levels cannot be tolerated. Annex D of the sample survey SOP is a recommended guide for determining progress. A copy of this report is forwarded to the parent unit and a copy is included in the project file. These reports are essential for the compilation of the final project report.

END-OF-PROJECT REPORT

11-14. An end-of-project report is used to inform the commander and the customer that the project has been completed. The results of the project will generally be listed on DA Form 1962. Copies of DA Form 1959, map overlays, and other graphics may be included. Annex E of the sample survey SOP shows the format for an end-of-project report. The report should be broken down into readily identifiable numbered and titled paragraphs, as follows:

Paragraph 1. References. A complete listing of all orders, letters, project directives, and memorandums for record (MFRs) concerning the project. Normally, the other reports will not be listed as references.

Paragraph 2. Personnel. The name and rank of all personnel participating in the project. The inclusive dates of their involvement should also be listed. This paragraph can be further broken down as follows:

- Field-crew personnel from the parent unit.
- Visiting or inspecting personnel (the unit or office should also be included).
- Local officials directly involved in the project.

Paragraph 3. Objective. The specific mission statement.

Paragraph 4. Discussion. A detailed discussion of exactly what transpired during the conduct of the project. Specific dates and details should be

included. The milestone objectives outlined in the recon report should be discussed. Indicate whether the project was kept on schedule, or fully explain the reasons for falling behind schedule.

Paragraph 5. Problem Areas. Specific problem areas and the solutions to the problems. This information becomes a historical record to be used for future planning purposes. Technical information will be included in the narrative and graphic sections of the recon report.

Paragraph 6. Funding. All fund citations and a total of all funds expended. The ISVT and recon reports are the sources for this information. Copies of all travel vouchers and other expenses should be included.

Paragraph 7. Work Hours. The total number of expended work hours (broken down by rank). A composite of all progress reports should be included.

Paragraph 8. Conclusions and Recommendations. Specific conclusions and recommendations.

INCIDENT REPORT

11-15. An incident report should be submitted any time there is an unusual occurrence that could have an impact on the project. Incidents such as vehicular accidents, equipment damage, and personnel injuries must be reported. There is no set format for an incident report. The initial report can be verbal or written.

VERBAL

11-16. The parent unit should be notified as soon as possible after the incident. This should be accomplished using a telephone, a radio, or an electronic message. The verbal report may be fragmentary because all the information may not be available or verified. The notification should answer the following questions:

- **Who?** Who was involved.
- **What?** What happened and what is being done to correct the incident.
- **When?** What time and date did the incident happen.
- **Where?** Where did the incident happen.

WRITTEN

11-17. In all cases, a written report is prepared and forwarded to the parent unit with copies going to the local POC (if appropriate) and in the project file. The written report will address the same questions as the verbal notification, but the significant difference will be the amount of detail. The written report should contain all details concerning the incident and must include written statements from any or all witnesses to the incident. In the case of accidents or equipment damage, preventive measures to preclude recurrence should be included. A copy of the written report should be included in the project file and, if significant, the incident should be listed within the problem areas of the end-of-project report.

REPORT DISPOSITION

11-18. The reports should be submitted through the project's operations officer for technical evaluation and completion. The reports are then forwarded to the company commander and the battalion S3 for information or approval. Copies of the reports should be kept in the project files for documentation (audit trail) and historical purposes.

SECTION II - BRIEFINGS

11-19. In addition to reports, briefings are used to update commanders and other key visitors on the project's status. There are two general briefing categories—impromptu and deliberate.

IMPROMPTU BRIEFING

11-20. The impromptu briefing is the simplest and yet the most difficult type of briefing. It is simple because it requires a minimum of support facilities and materials; however, it is also difficult because a thorough knowledge of all aspects of the project is absolutely essential, but the preparation time is usually very short. The scenario for an impromptu briefing is very simple. The commander or other visiting official arrives for a site visitation and requests an update. The OIC, the NCOIC, or another designated individual is expected to bring this person up to date on the project's status. The project progress reports are an invaluable source of information. Additionally, up-to-date maps of the project should be kept solely for the purpose of briefings. Other charts and statistical data that can be updated quickly are also advisable. The success of the briefing will depend primarily on the professionalism and knowledge of the briefer. The importance of the briefing cannot be overemphasized. An impressive impromptu briefing earns respect of those being briefed and builds their confidence that the survey team can accomplish its missions.

DELIBERATE BRIEFING

11-21. There are several types of deliberate briefings. They include information, decision, mission, and staff briefings.

INFORMATION BRIEFING

11-22. An information briefing is designed to inform the listener. The information briefing deals primarily with facts. It includes a brief introduction to define the subject and to orient the listener. It does not include conclusions or recommendations. Examples of when an information briefing might be appropriate are—

- High-priority information that requires immediate attention.
- Complex information (such as complicated plans, systems, statistics, or charts) that requires a detailed explanation.
- Controversial information that requires elaboration and explanation.

DECISION BRIEFING

11-23. A decision briefing is designed to obtain a decision (or an answer to a problem). In the higher HQ, the decision briefing is used for most matters requiring command decisions, including tactical matters. In the division HQ and below, a more informal type of the decision briefing is used. At the outset, the briefer must state that the object of the briefing is to secure a decision. At the conclusion, if no decision has been given, the briefer must ask for one. The briefer should be certain of understanding the decision thoroughly. If uncertain, the briefer must ask for clarification. The decision briefing may be compared to an oral staff study, in that it contains each of the major elements of a staff study. The following steps are the most logical sequence of events for a decision briefing:

Step 1. Isolate, define, and state the issue. Explain that the purpose of the briefing is to secure a decision. Include background information to show what led to the situation and why a decision is necessary.

Step 2. State any assumptions. Assumptions must be both reasonable and supportable.

Step 3. Present the facts bearing on the situation. This portion of the briefing is essentially the same as that for an information briefing, and the same rules generally apply to both types of briefings. All the important facts should be stated objectively, accurately, and fully. Facts that have a direct bearing on the problem and are already known to the person being briefed should be reviewed. Since this briefing should result in a decision, the listener is reminded of all the pertinent facts directly related to the problem. New facts, which are unknown to the person being briefed, should be limited to those that have a direct bearing on, or might influence, the decision.

Step 4. Discuss possible courses of action. The courses of action are stated and briefly analyzed. The advantages and disadvantages of each course are pointed out and compared in the discussion paragraph of the staff study. Indicate possible results of each course of action and any potential dangers involved.

Step 5. State the conclusion. State the degree of acceptance or the order of merit of each course of action.

Step 6. Make a recommendation. State the recommendation so that it may be used as a decision on the commander's approval. On presenting the recommendation, be prepared to discuss the coordination involved. Following the briefing, if the chief of staff is not present, inform the staff secretary, executive officer, or other appropriate administrative assistant of the commander's decision.

MISSION BRIEFING

11-24. A mission briefing is used under operational conditions to impart information, to give specific instructions, or to instill an appreciation of a mission. In an operational situation or when the mission is of a critical nature, it may become necessary to provide individuals or smaller units with more data than was provided in the orders. A mission briefing reinforces orders, provides more requirements and instructions for the individuals, and provides an explanation of the significance of their role. This type of briefing is

presented with care to ensure that it does not cause confusion or conflict with orders. Depending on the nature of the mission or the level of the HQ, a mission briefing is usually conducted by one officer, who may be the commander, an assistant, a staff officer, or a special representative.

STAFF BRIEFING

11-25. A staff briefing is used to secure a coordinated or unified effort. This may involve the exchange of information, the announcement of decisions within a command, the issuance of directives, or the presentation of guidance. To accomplish these results, a staff briefing may include characteristics of an information, a decision, a mission, or any combination of these briefings.

Attendance

11-26. Attendance at a staff briefing varies with the size of the HQ, the type of operation being conducted, and the personal desires of the commander. Generally, the commander, the deputy or executive officer, the chief of staff, the administrative assistant, and the senior representative of each coordinating- and special-staff section will attend. Representatives from major subordinate commands may also be present.

Scheduling

11-27. In garrison, staff briefings are normally scheduled periodically. Unscheduled staff briefings are called as the need arises. In HQ of larger units, staff briefings are often held on a regularly scheduled basis. In combat, staff briefings are held when required by the situation; however, at corps and higher levels, staff briefings normally are regularly scheduled events. Staff briefings are valuable in operational situations because full appreciation of the situation by the commander and staff is difficult to achieve by other means.

Topics

11-28. Matters discussed at staff briefings will vary. At lower levels, topics of immediate concern to the unit and its operations are discussed, while at higher levels the briefing may deal more with matters of policy. In field or combat operations, tactical matters will predominate. When staff briefings are held on a regularly scheduled basis, the substance of each staff officer's presentation may be for updating material previously presented.

Procedures

11-29. The chief of staff usually presides over the staff briefing, calling staff representatives to present matters that interest those present or that require coordinated staff action. Each staff officer must be prepared to brief on their area of responsibility.

Staff Estimates

11-30. The presentation of staff estimates culminating in a commander's decision to adopt a specific course of action is a form of staff briefing used in

the combat HQ. Staff officers involved in this type of briefing should follow the general pattern prescribed for the staff estimate being presented.

BRIEFING PROCEDURES

11-31. There are four steps for executing a briefing assignment—analyze the situation, structure the briefing, deliver the briefing, and follow up.

NOTE: All junior-grade NCOs should have received some formalized speech training as part of their NCO professional development. However, this training is not always adequate. Most installations have courses available such as instructor training or public speaking. These are generally short courses that will aid an NCO in presenting briefings.

ANALYZE THE SITUATION

11-32. The situation analysis includes analyzing the audience and the occasion, determining the purpose, allocating time, reviewing the facilities, and scheduling the preparatory effort.

- **Audience and occasion.** Consider the characteristics of the audience and the nature of the occasion. Include—
  - Who is to be briefed and why?
  - What is their official position?
  - How much knowledge of the subject does the individual have? Before briefing an individual for the first time, inquire as to their desires.
  - What is expected of the briefer?
- **Purpose.** Understand the purpose of the briefing to be delivered. Is it to present facts or to make a recommendation. The purpose determines the nature of the briefing.
- **Time allocated.** Know the approximate time allocated before constructing the briefing. The time allocated for a briefing will frequently dictate the style, the physical facilities, and the preparatory effort required.
- **Facilities.** Consider the physical facilities available. For example, if the briefing is held in an office, the use of heavy equipment may be impossible. Consider the availability of visual aids and time constraints.
- **Preparatory effort.** Schedule the preparatory effort carefully. Prepare a detailed presentation plan, and ensure that any assistant briefers know what is expected of them. Formulate a briefing checklist, make an initial estimate of the deadlines that must be established for accomplishment of each task, schedule facilities for rehearsal, and request critiques.

STRUCTURE THE BRIEFING

11-33. The structure of a briefing will vary with the type and purpose. The analysis provides the basis for this determination. When the briefing is to be informational, it will consist of such things as assembling information, selecting key points, deciding how to present the key points, and selecting visual aids. When the briefing is to obtain a decision, the briefer must state

the problem as well as the facts and must isolate and analyze the courses of action, reach conclusions, make recommendations, and obtain an understandable decision. Follow these steps when structuring a briefing:

Step 1. Collect material.

Step 2. Know the subject thoroughly.

Step 3. Isolate the key points.

Step 4. Arrange the key points in logical order.

Step 5. Provide supporting data to substantiate the validity of key points.

Step 6. Select visual aids.

Step 7. Establish the wording.

Step 8. Rehearse in detail.

DELIVER THE BRIEFING

11-34. The success of the briefing depends greatly on the manner of presentation. A confident, relaxed, clearly enunciated, and forceful delivery that is obviously based on a full knowledge of the subject helps convince the audience. Maintain a relaxed but military bearing and deliver a briefing that is concise, objective, and accurate. Be aware of the following:

- The basic purpose of the briefing is to present the subject as directed and to ensure that the audience fully comprehends it.
- Brevity precludes a lengthy introduction or summary.
- Conciseness permits no attention getters. Illustrations should be used for clarification if questions arise.
- There must be no personal or emotional involvement. Use logic in arriving at conclusions and recommendations.
- Interruptions and possible questions must be anticipated at any point. If interruptions occur, answer each question before proceeding. If the question will be answered later in the presentation, so state, and make specific reference to the earlier question when such material is introduced. Do not permit questions to distract from quickly getting back to the planned presentation, and be prepared to support any part of the briefing.

FOLLOW UP

11-35. Prepare an MFR when the briefing is over. The MFR should be brief, but it should record the subject, date, time, and place of the briefing as well as the rank, name, and position of those present. The substance of the briefing may be recorded in a concise form or it may be omitted. Recommendations and their approval, disapproval, or approval (with modifications) are recorded. Any instructions or directed action resulting from the briefing and the individual who is to take action are also recorded. When there is doubt as to the intent of the decision maker, a draft of the MFR is submitted to that individual for correction before it is prepared in final form. The MFR is distributed to staff sections or agencies that must take action on the decision

or instructions contained in it or whose operations or plans may be influenced. A copy should be included in the project file.

SECTION III - SURVEY SOP AND SUPPORTING ANNEXES

11-36. *Figures 11-1 through 11-9, pages 11-14 through 11-33,* are designed to serve as a sample SOP for topographic-survey operations. This SOP is intended as a guide, and compliance with these procedures may be the difference between an exemplary survey project and a very intensive learning experience for a survey crew. One SOP cannot cover the diverse survey projects encountered worldwide, so adjustment will need to be made when required.

11-37. This sample SOP is designed for topographic-survey operations and includes the following sample annexes:

- **Annex A.** ISVT report format.
- **Annex B.** TECHOPORD format.
- **Annex C.** Fragmentary order (FRAGO) format.
- **Annex D.** Percentage-of-project-completion report format.
- **Annex E.** End-of-project report format.

11-38. This sample SOP is to be used as a guide for completing a survey SOP and the supporting annexes. Refer to current correspondence guidance for proper preparation and formatting of these documents.

11-39. This SOP is important for the following reasons:

- The formats are a guide to ensure uniformity and completeness of survey orders and reports.
- A thorough reading of the content will provide insight into various types of surveys, the extent and depth of planning needed for surveys, and a means of learning from previous surveys. These sample orders and reports were taken from actual survey projects.

DEPARTMENT OF THE ARMY
Engineer Company/Section/Squad
Engineer Battalion (Topographic) (Airborne)

SUBJECT: Units' Survey-Operations SOP

1. INTRODUCTION

a. This SOP is designed to clarify and expedite mission accomplishment (specifically survey projects) so that projects are completed on time and meet specifications at a minimum cost.

b. The tasks identified herein must be accomplished. This SOP serves as a flowchart, with explanations of activities, and includes formats and information flow for reports. This SOP should be used as a checklist and a management-control document for all levels of operation (company, section, and squad).

2. PROJECT REQUEST AND S3 TASKING. No project will be undertaken unless directed by the engineer battalion operations officer. All projects must be coordinated with the S3, regardless of the source of the request (for example, NIMA, MACOMs, installation and community staff elements, or allied nations).

3. OPERATIONS-SECTION PROJECT EVALUATION. The company operations section must evaluate the project directive and advise the company commander in the following areas:

a. Resources. Identify the manpower and equipment requirements to complete the project as specified. Identify available manpower and equipment.

b. Appropriateness. Identify if the project requires MOS 82D (surveyor) skills. Identify if the company currently has the expertise required for the project.

c. Scheduling. Identify the project's priority and duration. Identify how the current work schedule will be affected, how annual training requirements will be affected, and if the work can be done in any season.

d. Final product. Identify what the customer really wants and needs. Identify what the company would have to produce.

e. Funding. Identify how the project will be funded. Identify how much money is available and what may be purchased (for example, lodging, rations, office and field materials, POL, repair parts, and equipment rental).

4. RESEARCH AND COORDINATION. The NCOIC will conduct an office recon for the project. This recon will include—

- Customer contact to determine the exact project requirements and the format of the final product.
- Research for reference data (such as station trig lists, maps, aerial photographs, and climate data). Data sources may include NIMA, USGS, NGS, the National Oceanic and Atmospheric Administration (NOAA), TEC, and the customer or state, county, and municipal records. When working in another nation, request information from the host nation.

5. WARNING ORDER. The company operations section will issue a warning order to the appropriate platoon based on project priority requirements, existing projects, available resources, and training requirements. The warning order will identify project requirements and the date of execution. The warning order will direct a recon mission and an ISVT report (Annex A) *(Figure 11-2, page 11-22)*. Upon receipt of the warning order, the survey section will begin reporting the project's status weekly to the company operations section.

Figure 11-1. Sample Survey SOP

6. SQUAD ASSIGNMENT. The platoon HQ will select a squad and/or specific personnel for the project. This determination will be based on the availability of personnel and equipment, personnel experience, familiarity with the project area, and required training.

7. ON-SITE RECON. The survey section is responsible for the initial on-site recon. A squad representative will assist with the recon. An ISVT report will be submitted, through the platoon leader to the company commander, with an information copy provided to the commander, engineer battalion (topographic), attention: S3. The report is normally due five working days after the completion of the recon and will be prepared by the squad assigned to the platoon HQ. The company commander will advise the battalion commander on the appropriateness of the project.

NOTE: If no further site recon occurs between the initial on-site recon and the arrival of the advance party, the most likely squad leader MUST participate in the initial on-site recon. If this recon is for support, it must be documented. If this recon is only to determine acceptance of the project, another recon will be required to determine the survey plan and to confirm the support.

8. OPORD. The company operations section will prepare and issue a TECHOPORD (Annex B) *(Figure 11-5, page 11-26)* in the standard military five-paragraph format. The TECHOPORD will direct the platoon to perform the survey mission. The company operations section will issue all maps, trig lists, and overlays (if not previously issued) to the survey section.

9. FRAGO. The platoon HQ will issue a FRAGO (Annex C) *(Figure 11-6, page 11-27)* to the assigned squad instructing them to perform the survey mission. The FRAGO will contain all the information required by the squad leader to complete the project.

10. DETAILED RESEARCH AND COORDINATION. The squad leader is responsible for the detailed examination of applicable trig lists, past project reports for the area, maps, deeds, and any other pertinent source data. The platoon HQ and the SIC may be tasked to assist in assembling this information. Using this information and any on-site-recon information, the squad leader will design the project. Weekly percentage-of-project-completion progress reports (Annex D*) (Figure 11-7, page 11-28)* will be submitted through the platoon HQ to the company operations section from this point until project completion. The squad leader will choose the method to meet project specifications and time requirements and will prepare a written survey plan, to include drawings and overlays of survey schemes, as information permits. This plan will reflect the squad leader's best estimate of survey design. If a comprehensive survey recon has not been accomplished, the survey plan will not be final. The final plan will be designed on-site as part of the advance party's tasking. Any changes from the original plan will be submitted to the platoon HQ verbally and in writing, if so instructed. The project plan will be written in the format of a project briefing.

11. CREW AND EQUIPMENT PREPARATION. The squad leader selects personnel and equipment based on job requirements. The personnel are selected based on their personal experience, expertise, and training. The crew begins immediately to train on specific skills needed for the project. The squad leader will identify specific items of equipment to be used on the job and will ensure operational readiness, to include performing required maintenance. The squad leader will identify and order all required supplies for the project.

12. PROJECT BRIEFING. The squad leader will brief the platoon leader and the company commander on the project. At a minimum, the briefing will cover the following items:

a. Mission. Identify the final product and the customer.

b. Concept of operation. Identify how the squad will complete the project. Discuss the following items:

(1) Design. Identify what methods (for example, triangulation, traverse, or level) will be used. Identify where the lines of survey will be run. Use a map to show the existing control and the proposed lines of survey.

Figure 11-1. Sample Survey SOP (continued)

(2) Time estimate. Show a proposed work-hour estimate and indicate the departure and return dates.

(3) Cost estimate. Categorize the estimated cost (for example, POL, lodging, per diem, and contingency) and show the total cost.

(4) Travel. Identify the methods of travel and the amount of travel time.

c. Personnel and equipment requirements. Identify what personnel (skills and number) are required, and provide a by-name listing. Identify what major items of equipment are necessary and how many items are required.

d. Service support. Identify the requirements for the following:

- Lodging.
- Mess.
- Medical.
- Equipment maintenance.
- Materials and supplies.
- POL.
- Transportation.

e. Command and signal. Identify the reporting procedures.

f. Training. Identify the specific MOS skills and ARTEP/MTP tasks that are required by the project. Identify what training is necessary to prepare the squad for project execution.

13. TEMPORARY DUTY (TDY) PREPARATION. The squad will usually have 14 calendar days to prepare for a TDY project. The squad leader is responsible for scheduling and executing preparations for the squad members. The platoon leader and the first sergeant (1SG) are responsible for assisting in these preparations. The following areas should be addressed:

a. TDY orders.

(1) The squad leader will prepare a request for orders and forward it to the platoon HQ. This request should include the—

- Members' name, rank, social security number, and security clearance.
- Project directive number.
- Project dates.
- Modes of transportation.
- Special considerations (such as authorization for telephone calls, rental vehicles, and extra baggage).

(2) The platoon HQ will review the request, add any necessary information, and forward it to the company operations section. The company operations section is responsible for obtaining the finalized orders and returning copies to the platoon.

b. Barracks personnel. Barracks personnel are responsible for the completion of the following:

- Securing oversized and valuable items.
- Inventorying items in their wall lockers (the squad leader and an officer should do the inventory and make a copy for the individual, supply, and inside the locker).
- Having their wall lockers banded.
- Turning in their room keys.

c. Health and personnel records. Personnel are responsible for picking up their medical and dental records, rescheduling any pending appointments, and updating their shot records. They are also responsible for updating their military personnel records.

Figure 11-1. Sample Survey SOP (continued)

d. Personal gear. Soldiers should pack appropriate items for the project-area climate. For example, nighttime temperatures in a desert can be 30°F lower than peak daytime temperatures. Arrange for safeguarding of privately owned vehicles (POVs) if left behind. Prior coordination may allow POVs to be stored in the transportation motor pool (TMP). If a POV inspection, registration, or insurance renewal will be needed before the members' return, a notarized authorization for proxy is required before leaving.

e. Mail. Mail will not be forwarded unless specifically requested. A statement must be filed with the unit's mail clerk for someone else to pick up the mail in the event that the member does not want it forwarded. A squad member should be designated as the mail handler.

f. Finances. Only personnel with direct deposit are authorized to perform TDY missions away from the installation. After receipt of TDY orders, a pay advance may be drawn. If flying to the project site, TDY orders are used to obtain a transportation request and tickets at the scheduled airline ticket office (SATO). The squad leader will brief the squad on travel-voucher procedures (for example, keep copies of the original orders, travel requests, lodging receipts, official telephone receipts, contingency purchase receipts, and rental receipts).

g. Military drivers' licenses. Personnel must get a license for all squad vehicles and any possible TMP vehicles (for example, pickups or vans) that they will be required to operate. Personnel must take a copy of their military driver's license to the project site.

h. Equipment inventories. Any equipment the squad leaves behind must be inventoried in writing. The inventory must be signed by the master hand-receipt holder or the acting squad leader. All equipment taken to the project site will be inventoried in writing by the squad or team leader. Copies of the hand receipts should remain with the individuals that are signed for the equipment.

i. Military vehicles. Each vehicle must have a thorough technical inspection before departure, must have a complete organization vehicle maintenance (OVM) set, and should be dispatched for the entire length of the project.

j. Briefings. The squad leader will give a project briefing to the squad members. The platoon and/or company HQ will give safety and personal-conduct briefings.

k. Sign out. All personnel will sign out of the battalion with the Adjutant (US Army) (S1) or the staff duty NCO (SDNCO) upon departure. Meal-card holders will turn in their meal cards.

l. Government credit cards. All squad members will obtain a government credit card from the supply officer (US Army) (S4).

m. Instrument calibration. The squad leader will ensure that all adjustments and calibrations for the surveying equipment to be used on the project are completed.

n. Administrative project file. The administrative project file should include the following:

- A copy of the project directive.
- A copy of the survey plan.
- A copy of the recon report.
- Copies of all subsequent trip reports.
- Copies of all TDY orders/advances related to the project.
- Emergency data on all personnel assigned to the project.
- The company's officer and NCO rosters (including telephone numbers).
- File copies of all required forms for reproducing additional copies.
- A copy of each member's military driver's license.
- Travel vouchers.
- A copy of the current battalion access roster.

Figure 11-1. Sample Survey SOP (continued)

o. GS equipment and supplies. The following GS equipment and supplies should be included:

- Office supplies.
- Survey and other support forms.
- A first-aid kit.
- Drawing, chart, and printer paper.
- Calculators, paper, and batteries.
- Counseling statements.
- Official mailing envelopes.
- Weekly-report forms.

p. Reference materials. The following reference materials should be included:

- Maps and trig lists.
- Soldier training publications (STPs) and common training task (CTT) manuals.
- Job books.
- Survey manuals.
- The company's survey SOP.
- TMs and manufacturers' manuals.

q. Training. Training should be completed or rescheduled as necessary. Consider the following training requirements:

- Annual training requirements (mission), to include weapons qualification and the Army physical fitness test (APFT).
- Annual training requirements (personal knowledge), to include CTT packets and scheduled training for the TDY period.
- Weight-control program.
- POV training (to include registration and operator's license).
- Defensive-driving training.
- Off-duty classes.

r. Family members. Personnel must get a power of attorney (if needed) and make arrangements for nonlicensed dependents (such as commissary, hospital, and shopping privileges).

14. ADVANCE PARTY

a. Generally, the squad leader and one or two squad members will depart first. The assistant squad leader will complete the final administrative preparations with the remaining squad members.

b. The squad leader will inspect and sign for quarters and administrative space at the project site. Telephonic communications with the company at the home site should be established upon arrival and equipment should be secured. If communication with the home site is required after duty hours, contact will be made with platoon HQ personnel at home or, as a last resort, with the SDNCO.

c. All POCs from the initial recon should be contacted. Additionally, the military or local police should be informed of mission requirements, AOs, vehicle types, and bumper/license numbers.

d. Further detailed recon/station recovery and verification should begin immediately and the final project design completed. Coordinate access for keys, escorts, and range-control data from local surveyors or the local courthouse. A successful advance party will allow the squad to begin work as soon as they arrive at the project site.

Figure 11-1. Sample Survey SOP (continued)

15. SQUAD MOVEMENT TO THE PROJECT

a. The squad leader or the assistant squad leader will conduct the movement to the project. All vehicles will move as a group under the NCOIC's control. If the project site is 450 miles or less away, the movement time will be one day. At distances greater than 450 miles, the movement rate will be approximately 300 miles per day. All overnight lodging will be at one location if possible, and all equipment will be secured.

b. Obtain fuel at service stations that accept government credit cards. Use self-service pumps when possible.

c. Each day, the platoon HQ or the SDNCO will be given the location and telephone number of the overnight lodging. They will also be notified upon arrival at the project site.

d. If movement is by commercial air, ensure that all baggage claim checks are safeguarded until all equipment is received at the final destination. If movement is by military aircraft, make every attempt to move the equipment with the personnel. If equipment must be moved independently, the equipment will be submitted with a "priority, no-bump" statement. At least one person will observe the physical loading of the survey equipment onto the aircraft. Copies of all movement documents will be retained until the equipment is received after movement. At a minimum, obtain and document the—

- Type and model of the aircraft.
- Tail number of the aircraft.
- Mission number.
- Number of the transportation-control-and-movement document (TCMD).
- Date and time of departure.
- Route of the aircraft (including any intermediate stops before the survey equipment is to be unloaded).

16. PROJECT EXECUTION

a. Fieldwork. The squad leader is responsible for daily checks of fieldwork and computations. All recordings and computations should be in black ink, double-checked, and initialed to indicate that the checks have been performed.

b. Maintenance. Daily maintenance on each vehicle and weekly preventive-maintenance checks and services (PMCS) on all survey equipment should be performed. Report immediately to platoon HQ each time the equipment-readiness status changes. All accidents must be reported to the company commander within 24 hours. Accident reports and statements from all concerned parties will be prepared immediately and forwarded to the company commander.

c. Safety. All guidelines set forth in the unit's safety SOP must be followed.

d. Inventories. Those items used in the field survey and all sensitive items of equipment (for example, survey instruments, binoculars, compasses, and OVM) must be inventoried daily. Inventory weekly all hand-receipted equipment, and report any damaged, lost, or inoperational equipment to the platoon HQ within 24 hours.

e. Training. The squad leader will determine the type and schedule of physical training. The physical training should meet current minimum standards. CTT and soldier's manuals (SMs) should be taken to the project because training in these skills can be conducted during inclement weather.

f. Progress reports. Weekly progress reports will be submitted to the platoon HQ. The format shown at Annex D should be used to record vehicle mileage, fuel used, work hours expended, and the percent of the project completed.

g. Daily log. The squad leader will keep a written daily log of the progress, activities, and problems that relate directly to the mission. All other occurrences (such as personnel insubordinate behavior) will be recorded. The squad leader will be prepared at all times to present an informal progress briefing to any visitors or inspectors.

Figure 11-1. Sample Survey SOP (continued)

17. ON-SITE EDIT

a. The squad is responsible for conducting an on-site edit during the last phase of the project (if possible). This edit will include, but is not limited to, checking—

- **Computations.** Math computations and procedures must be done correctly (to include all headings and signatures).
- **Field sheets/books.** Field notes should be checked and have headings.
- **Station descriptions.** Station descriptions must include a completed sketch, appropriate reference features, and field-note checks. Grammar and paragraph sequence should be checked.
- **Airfield drawings.** Airfield drawings must be complete, accurately plotted, and field checked.

b. All corrections and notations made by edit personnel will be in red ink. All pages checked will include the editor's initials in red ink. Notes and lists should be free of any glaring or repetitive errors.

18. SQUAD MOVEMENT FROM THE PROJECT

a. After all field observations and computations are completed, the squad will clear the project site and return to the home installation. The squad leader will ensure that—

- Borrowed equipment is turned in.
- The lodging area is cleaned.
- Equipment is inventoried.
- Preoperational vehicle checks are conducted.
- All outstanding bills are paid.
- All vehicles are properly dispatched.

b. The customer will not be provided a copy of the unedited data unless so directed by the platoon/company HQ. When required to leave a copy with the customer, ensure that a statement is attached indicating that the data provided is preliminary and unadjusted.

c. Movement from the project will be conducted the same as movement to the project. The platoon HQ will be contacted before departure from the project site.

19. SQUAD RECOVERY. Upon return to the home installation, the following will be accomplished:

- A platoon representative will meet the returning squad with any instructions.
- Members will sign in at the S1 or the SDNCO.
- Members will sign for keys and inventory their wall lockers.
- Vehicles will be topped off, cleaned, technically inspected, and secured at TMP.
- TOE equipment will be cleaned, inventoried, inspected, and secured. Any required maintenance will be scheduled.
- Finance vouchers will be completed, inspected at the platoon HQ, and filed with the FAO for payment.
- The platoon HQ will be briefed on the project's status.
- Each person's final finance voucher will be forwarded through the platoon HQ to the company operations section when received.
- Time for personal affairs and missed training will be scheduled.

20. EDIT AT HQ. Upon return from the project, the squad leader will submit a completed survey packet to the platoon HQ. The platoon HQ will check all final computations, drafting, and recovery-card preparation. An end-of-project report (Annex E*) (Figure 11-9, page 11-30)* will be submitted by the squad leader to the platoon HQ within three working days after the survey project is completed. A copy of the report should be included in the survey packet. The survey packet should contain (in the following order) this information:

- The end-of-project report.
- A detailed narrative (packet introduction) explaining the contents of the packet.

Figure 11-1. Sample Survey SOP (continued)

- A sketch or an overlay of all the work done.
- An index.
- Tabulated data and DA Forms 1959.
- Check-angle, GPS, distance, level, and starting-inverse computations.
- All level lines, traverses, and GPS data in sequence (main-control extension, connecting control, and side or loop extensions).
  - Level lines will contain (in order) a sketch of the level line, a DA Form 1942, and field notes.
  - Traverses will contain (in order) a sketch of the traverse, final position computations (DA Forms 1923 and 1940), the final inverse position, elevation computations, abstracts, distance-measurement/reduction field sheets, horizontal-direction field notes, vertical-angle/ZD field notes, and intersection/side-shot notes.
  - GPS data will contain a sketch of the GPS positions, printed position computations and datum transformations, and backup disks containing all recorded data.

21. PLATOON REVIEW

a. The platoon will review the end-of-project report and make a file of all pertinent records, vouchers, forms, reports, and copies of the final product. The platoon will make appropriate award recommendations and ensure that all members' finance transactions (for example, meal cards, separate rations, and basic allowance for quarters [BAQ]) are followed through to completion.

b. Upon completion of the platoon review, a first endorsement to the end-of-project report will be prepared by the platoon and forwarded with the report and final project packet to the company operations section. The endorsement will identify any additional work hours expended during the edit and review, inspection results, and any other pertinent data.

22. COMPANY OPERATIONS-SECTION FINAL REVIEW. The company operations section will review the final project packet for accuracy and completeness. A file copy will be made and any pertinent data will be stored in the SIC. The project packet will be forwarded (with a letter of transmittal) to the battalion S3. Additionally, a second endorsement to the end-of-project report will be prepared and forwarded to the battalion S3. This endorsement will contain any additional work hours expended during the edit and review and inspection and all final project data. Copies of the end-of-project report (with all endorsements and enclosures) will be forwarded to the platoon HQ and the battalion S3 for information and filing. A file copy will also be kept in the company operations section.

Figure 11-1. Sample Survey SOP (continued)

DEPARTMENT OF THE ARMY
Engineer Company
Engineer Battalion (Topography) (Army)
Fort Anywhere, State, and Zip

AFFA-TA-S 03 February XXXX

Commander
Engineer Company
Attention: Operations
Fort Anywhere, State, and Zip

Reference: Project directive number, date, FAA Airfield Obstruction Survey.

SUBJECT: ISVT Report (Fort Bliss, Biggs Army Airfield [AAF], Texas, 28 - 31 January XXXX)

1. PERSONNEL

a. List all POCs at the project site.

b. List any other POCs involved with the project.

2. OBJECTIVES

a. Determine the scope of the work to be performed.

b. Make a thorough recon of the areas to be surveyed. Locate existing survey control.

c. Complete a liaison for all types of support requirements ranging from lodging to vehicle maintenance.

3. MISSION. The Survey Section, 99th Engineer Company, will dispatch a survey team of eight members to Fort Bliss, Texas, on or about 19 February XXXX, after receipt of project funding. They will conduct a complete survey of all NAVAIDs and airfield obstructions according to specifications established by the US Army Air Traffic Control (ATC) Activity, Aeronautical Services Agency, Cameron Station, Alexandria, Virginia, 22304-5050. If time and funding permit, the team will revalidate the aging compass rose located on Biggs AAF.

4. DISCUSSION

a. Location. Biggs AAF is located adjacent to Fort Bliss, Texas, and El Paso International Airport.

b. Environmental factors. The terrain is basically flat, with the airfield being located on a high desert plateau. The Franklin Mountains are located about 4 miles west of the airfield, and the Hueco Mountains are located about 15 miles to the east. Vegetation is sparse and is limited to scrub brush. Normal daily temperatures for this time of year are 40ºF to 50ºF during the day and 20ºF to 30ºF at night. Precipitation is minimal throughout the year.

c. Medical facilities. Emergency medical treatment is available 24 hours a day at the William Beaumont Army Medical Center. Routine treatment may be accomplished at the consolidated troop medical clinic located in Building 2496. Dental care will be provided (for emergencies only) at the dental clinic located in Building 2699.

Figure 11-2. Sample Annex A (ISVT Report)

d. Shopping facilities. Complete commissary and post exchange (PX) facilities are available on Fort Bliss. Additionally, small branch exchanges are located throughout the post and on Biggs AAF. Both facilities accept checks, and the PX will cash personal checks for up to $100 per day. Additionally, the PX will accept certain specified credit cards.

e. Vehicle maintenance. Fort Bliss TMP is unable to support our vehicle requirements. We will rent two sedans and one pickup truck from the Bogus Rental Car Company, El Paso, Texas. Fuel will be procured through TMP with DPW reimbursing TMP for the fuel used.

f. Lodging and office space. As of this date, the only lodging available on Fort Bliss is through the bachelor enlisted quarters (BEQ). The lodging office is located in Building 504A. Office and equipment-storage space is available on Biggs AAF. The POC is the airfield operations office.

g. Dining facilities. The use of government mess is adverse to the timely completion of the mission on Fort Bliss. Access to the project site is controlled by the airfield operations office, and the hours of work are adjusted according to flight operations. It would cause undo delay to halt survey operations to meet the scheduled meal times of a dining facility. It is strongly recommended that all personnel be placed on per diem. There are numerous restaurants and fast-food establishments in the Fort Bliss and El Paso area. There is also a food concession next to the PX.

h. Cost estimates. A cost-estimate work sheet is at Enclosure 1 *(Figure 11-3, page 11-24)* and a cost-estimate memorandum is at Enclosure 2 *(Figure 11-4, page 11-25)*. Cost estimates should include the following:

- Parameters—
  - Advance party.
  - Remainder of crew.
  - Command visitors.
  - Rental cars.
- Actual costs—
  - Airfare.
  - Lodging.
  - Per diem.
  - Transportation to, on, and from the project site.
  - Shipment of equipment (identify the shipping company).
  - Contingency fund.
- Total estimated cost.

5. TECHNICAL INFORMATION (INCLUDE IF APPLICABLE)

6. RECOMMENDATION AND CONCLUSION. The project should be accepted by this unit. It will provide training in the following STP/MTP tasks:

a. Task number 051-260-1122 (Set Up Survey Target).

b. Task number xxx-xxx-xxxx (task title).

JOHN DOE
Sergeant First Class (SFC), US Army
Survey-Section NCOIC

Enclosures

Figure 11-2. Sample Annex A (ISVT Report) (continued)

Cost-Estimate Work Sheet

Parameters

Advance party:	Depart	28 May 1999	(number of personnel 3)
	Return	4 June 1999	(number of personnel 1)
	Return	7 July 1999	(number of personnel 2)
Remainder of crew:	Depart	2 June 1999	(number of personnel 9)
	Return	7 July 1999	(number of personnel 9)
Command visitors:	Depart	22 June 1999	(number of personnel 2)
	Return	24 June 1999	(number of personnel 2)

Rental cars: _____

Actual costs

Airfare:	Advance party	3 persons x $ 899.00	= $ 2,667.00
	Crew	9 persons x $ 899.00	= $ 8,001.00
	Visitors	2 persons x $ 899.00	= $ 1,778.00
		Total	= $ 12,446.00
Lodging:	Advance party	2 persons x 40 days x $25.00	= $ 2,000.00
	Advance party	1 persons x 6 days x $25.00	= $ 150.00
	Crew	9 persons x 36 days x $25.00	= $ 8,100.00
	Visitors	2 persons x 2 days x $25.00	= $ 100.00
		Total	= $ 22,796.00
Per diem ($49.50 per day)			= $ 22,176.00
		Total	= $ 44,972.00
Transportation to the site (provided by local personnel)			= $ 0.00
Shipment of equipment (identify the company)			= $ 3,100.00
Contingency fund			= $ 3,000.00
Total cost			= $ 51,072.00

Sample

Figure 11-3. Sample Enclosure 1 to Annex A (Cost-Estimate Work Sheet)

DEPARTMENT OF THE ARMY
Engineer Company
Engineer Battalion (Topographic)
Fort Anywhere, State, and Zip

(office symbol) 31 January XXXX

Commander
United States Army Air-Defense Center and Fort Bliss (USAADCENFB)
Attention: ATZC-DPW-P
Fort Bliss, Texas 79916-6104

SUBJECT: Biggs AAF Survey Cost Estimate

1. After performing a thorough recon for this project, I estimate the cost for this project to be $51,000.00. This cost estimate reflects the fact that no vehicle support or free lodging are available from Fort Bliss.

2. This cost estimate does not reflect the amount that DPW will need to reimburse the Fort Bliss TMP for about 200 gallons of gas. This fuel will be needed for use by the three rental vehicles to be used on this project.

3. A funding request for the amount of the cost estimate should be prepared and forwarded to: Commander, Engineer Battalion (Topographic), Attention: AFFA-TA-PCS, Fort Anywhere, State, and Zip. Request this action be expedited to allow the project to begin on 19 February XXXX.

JOHN DOE
SFC, US Army
Survey-Section NCOIC

Figure 11-4. Sample Enclosure 2 to Annex A (Cost-Estimate Memorandum)

Engineer Battalion (Topographic)
Fort Anywhere, State, and Zip

References:
a. Letter, dated 17 May XXXX, SUBJECT: Engineering Surveys of AAFs
b. Letter, dated 29 May XXXX, SUBJECT: Engineering Surveys of AAFs
Time zone used throughout this order: ROMEO

SUBJECT: TECHOPORD (Fort Bliss)

1. SITUATION

a. Enemy forces. None.

b. Friendly forces. DPW, Fort Bliss, Texas, Engineer Battalion (Topographic) (Airborne) with subordinate units (HHC and Engineer Company [Topographic]).

c. Attachments and detachments. None.

2. MISSION. The engineer company (topographic) will perform a NAVAID/obstruction survey of Biggs AAF, which is adjacent to Fort Bliss, Texas.

3. EXECUTION

a. Concept of operation. The engineer company (topographic) will coordinate, schedule, and perform survey operations to accomplish the above mission not later than 30 April XXXX. The S3 will monitor project progress and coordinate external requirements upon request.

b. Coordinating instructions. Direct coordination with the following POC is authorized: First Lieutenant (1LT) Gibson, Master Planners Office, DPW, Fort Bliss, Texas, 555-555-5555.

4. SERVICE SUPPORT

a. Unit equipment and supplies will be used. Rental vehicles are authorized if economically feasible.

b. Support request(s) will be submitted to this HQ, Attention: AFFA-TA-OP, as needed.

5. COMMAND AND SIGNAL

a. Command. Refer to the battalion's SOP and complete the following reports.

(1) Submit a recon report within 30 days of receipt of this OPORD to the S3.

(2) Report the project's status weekly to the S3 not later than 1200 hours each Friday.

(3) Submit an end-of-project report to the S3 within 15 days after completion of the project.

b. Signal. None.

WILLIAM SMITH
Lieutenant Colonel (LTC), Engineer (EN)
Commanding

Figure 11-5. Sample Annex B (TECHOPORD)

FRAGO # 99-2009-1

References:

a. Technical Operations Work Order # 99-2009

b. FM 3-34.331

c. STP 5-82D14-SM-Trainer's Guide (TG), Task # 051-260-XXXX

Time Zone Used Throughout the Order: ROMEO

SUBJECT: FRAGO (Fort Bliss)

1. SITUATION

a. Friendly forces. Engineer battalion (topographic).

b. Enemy forces. None.

c. Assumptions. This unit may be tasked to perform high-order survey work in the near future. Personnel should become familiar with the computations associated with this type of work.

2. MISSION. Each squad within the survey section, engineer company, has been tasked to compute the geodetic azimuth from the north and the geodetic distance for each set of known coordinates to be used during the survey.

3. EXECUTION

a. Concept of operations.

(1) Transcribe the positions for each set of known coordinates onto DA Form 1923.

(2) Compute the geodetic azimuth from the north and the geodetic distance for each set of coordinates.

(3) Compute the distance to 0.001 meter and the azimuth to 0.01″.

(4) Comply with third-order, Class I traverse specifications.

(5) Maximize the use of personnel that are unfamiliar with this computation for training purposes.

(6) Submit progress reports (to include the work hours expended and a by-name list of the personnel working on computations) by 1100 hours each Friday until the completion of the project.

(7) Submit the completed data to the survey-section NCOIC by the close of business 27 February XXXX.

b. Coordinating instructions. Calculators and reference materials are available from SFC Doe. All technical questions/problems should be directed to SFC Doe.

4. ADMINISTRATION AND LOGISTICS. The only available resources are those contained within the survey section.

5. COMMAND AND SIGNAL

a. Command. Squad leaders are responsible to ensure that all required data and reports reach the survey-section NCOIC as required.

b. Signal. None.

JOHN DOE
SFC, US Army
Survey-Section NCOIC

Figure 11-6. Sample Annex C (FRAGO)

26 February XXXX

MEMORANDUM FOR SEE DISTRIBUTION

FROM Commander, Engineer Company (Topographic), Fort Anywhere, State, and Zip

SUBJECT: FA-TA-S Survey Project, Percentage of Completion

1. To standardize company operating procedures, projects will be reported using a survey-project timeline that lists the percentage of completion for each project task.

2. The project's status is due to the company operations section each Friday by 1000 hours. Request immediate attention be given to this suspense.

3. A sample survey-project timeline is enclosed.

4. The field-survey percentage-of-project-completion timeline is broken down for each project task and is reported as follows:

- Traverse for extension of control.
- Level line for control extension or cross sections/profiles.
- GPS point positioning.
- Airfield obstructions or NAVAIDs.
- Drafting.

MARY DOE
Captain (CPT), EN
Commanding

Enclosure

Figure 11-7. Sample Annex D (Percentage-of-Project-Completion Report)

TASK	SURVEY-PROJECT TIMELINE (DAYS)																											
	1	**2**	**3**	**4**	**5**	**6**	**7**	**8**	**9**	**10**	**11**	**12**	**13**	**14**	**15**	**16**	**17**	**18**	**19**	**20**	**21**	**22**	**23**	**24**	**25**	**26**	**27**	**28**
Travel and administration	8	8/5					0							0					8	8/5	0							
Monumentation			8				0							0							0							
Level line			1	1	1	1	0							0							0							
GPS-data collection				4	4	4	0							0							0							
Runway profiles							0	1						0							0							
Obstructions/ side shots							0	2	2	2	2	2	2	0	2	2					0							
Computations							0	6	6	6	6	6	6	0	6	6	6	6			0							
Checks and reobservations							0	4	1					0			2	2			0							
Drafting*									6	6	6	6	6		6	6	6	6										

LEGEND:
0 = Day off **2 = AISI** **4 = GPS** **6 = PC**
1 = Level **3 = Transit** **5 = Vehicles** **8 = Personnel**

***To be completed at the home station.**

Sample

Figure 11-8. Sample Survey-Project Timeline

DEPARTMENT OF THE ARMY
Engineer Company (Topographic)
Engineer Battalion (Topographic)
Fort Anywhere, State, and Zip

AFFA-TA-X 18 April XXXX

THRU Commander, Engineer Company (Topographic), Fort Anywhere, State, and Zip

TO Commander, Engineer Battalion (Topographic), Fort Anywhere, State, and Zip

References:

a. Letter, dated 29 September XXXX, Topographic Survey Requirements (Enclosure 1)
b. Letter, dated 10 November XXXX, Topographic Support, Project Directive #2-84 (Enclosure 2)
c. OPORD, Engineer Battalion (Topographic), dated 30 November XXXX, OPORD 99-148 (Enclosure 3)
d. Letter, dated 4 October XXXX, Preliminary-Recon Trip Report (Enclosure 4)
e. Letter, dated 22 December XXXX, Recon Trip Report (Enclosure 5)
f. Letter, dated 24 February XXXX, Inspection Trip Report (Enclosure 6)
g. Letter, dated 12 March XXXX, Inspection Trip Report (Enclosure 7)

SUBJECT: End-of-Project Report (New Cumberland Army Depot [NCAD], Pennsylvania, 19 January - 2 April XXXX)

1. PERSONNEL

a. Inspectors.

SFC John Doe, Survey-Section NCOIC, 2 February

1SG John Smith, 16 - 17 February

b. Field crew.

Staff Sergeant (SSG) John Lopez, Squad Leader, 19 January - 2 April
Sergeant (SGT) John Evans, Computer, 19 January - 2 April
Private First Class (PFC) John Payne, Computer/Drafting, 19 January - 2 April
Specialist (SPC) John Green, Field-Crew Chief, 19 January - 2 April
SPC John Black, Surveyor, 19 January - 2 April
PFC John Parker, Surveyor, 19 January - 2 April
PFC John Kramer, Surveyor, 19 January - 2 April
PFC John Simpson, Surveyor, 2 February - 2 April
PFC John Gonzalez, Surveyor, 19 January - 5 February

Figure 11-9. Sample Annex E (End-of-Project Report)

2. REQUIREMENTS

a. The original requirements for the project were—

- To perform a verification survey of the entire boundary. The missing corners were to be monumented by DPW, facilities engineering division (FED).
- To apply third-order elevations on the boundary monuments.
- To develop topographic maps of the two areas where Buildings 87 and 92 would be relocated.

b. After the final recon was completed, the requirements had been changed to—

- Perform a verification survey of the entire boundary. The missing corners were to be monumented by the survey crew with monuments premade by DPW, FED.
- Apply third-order elevations on the boundary monuments.
- Provide a drawing of the base boundary and station descriptions for each corner and BM (the development of topographic maps was no longer necessary).

c. As the project neared its end and the monuments for the boundary corners were still not made, the requirements for elevations on each boundary monument changed to establishing BMs near the boundary corners (for example, nails in headwalls) and on as many boundary monuments as time would permit. All other requirements remained the same as stated above.

3. METHODS. The mission was broken down into five main areas—recon, traversing, locating corners and placing monuments, leveling, and computing and drafting.

a. Recon. The recon was conducted about one month in advance of beginning the fieldwork. It consisted mainly of a deed search at the courthouse, requests for additional information from adjoining landowners (for example, the Pennsylvania Turnpike Authority), an on-ground search for existing boundary corners and starting control, and logistical-support arrangements. This phase of the operation resulted in a reciprocal request from the Pennsylvania Turnpike Authority for two copies of the final drawings.

b. Traversing. All traverse work was performed using third-order, Class I procedures. In total, there were seven traverses, one of which was the main-control traverse. It contained 25 stations and was run from Station Alpha (a first-order horizontal-control point) through boundary corners number 4, 5, and 6 and Stations T-4 and T-5 and closed on Station Bravo (a second-order point). This established a common coordinate system for the existing boundary corners. The other traverses were used to place control near the location where the remaining boundary corners should have been. The azimuths were checked and verified by performing astronomic-azimuth observations to third-order specifications at Station Alpha and at Stations T-4 and T-5. The main-control traverse had a position closure of 1:17,000, and the poorest closure obtained on any of the other six traverses was 1:5,000.

c. Locating corners and placing monuments. The lost/destroyed boundary corners were recovered or replaced. Coordinates were computed for all boundary corners using the coordinates established on boundary corners 4, 5, and 6 and the bearings and distances from the deeds. Inverses were computed from the traverse stations nearest the desired corner to that boundary corner. The traverse station was occupied, the computed angle was turned, and the distance was horizontally taped, thus locating the corner in question. This point was then temporarily marked by either a piece of rebar, a railroad spike, or a nail, depending on the type of ground encountered. Plumbing benches were built over the temporary marks, the markers were removed, holes were dug, and the monuments were placed in their proper positions. After the dirt was tamped down and the plumb was checked, concrete collars were poured around the monuments to ensure that they would not move.

Figure 11-9. Sample Annex E (End-of-Project Report) (continued)

d. Leveling. The requirement for third-order elevations was met by running two third-order lines. The first line started on BM 2 and ran around the perimeter of the southern half of the depot to BM 1. This line established 13 BMs, had an error of closure of 0.065 feet, and was 4.8 miles long. The second line started on BM 1 and ran around the perimeter of the northern half of the depot to Station T-4. This line established the elevation on seven points, had an error of closure of 0.003 feet, and was 1.7 miles long.

e. Computing and drafting. Computing for this project was an ongoing endeavor from the time of the final recon until two weeks after the end of the project. This was due to the vast number of deeds for the land surrounding and now comprising the NCAD, and some of the final data was needed on site at the completion of the project. The drafting was accomplished in the last two weeks of the project and consisted of three drawings. Copies of all drawings were provided to the FED and the Pennsylvania Turnpike Authority before departing the NCAD. Station descriptions were an ongoing effort throughout the project.

5. EQUIPMENT. Two categories of equipment were used—organizational and borrowed.

a. Organizational. The organizational equipment included three M998 vehicles, two theodolites (one military level and one infrared EDME), two Philadelphia rods, two T-2 target sets, one 50-meter tape measure, one 100-foot tape measure, one tape tension handle, one taping-pin set, and one programmable calculator.

b. Borrowed. The following items were borrowed from the NCAD, FED: three FM, hand-held radios; one posthole digger; and one auger truck with operators. On two or three occasions when the vehicles were down, a carryall was borrowed from TMP.

6. ACHEIVEMENTS. Excellent training was gained by all personnel in traverse, leveling, taping, and monument-setting procedures. All personnel gained valuable experience at operating under extreme cold and wet conditions. SGT Evans and PFC Payne received valuable experience in all types of survey computations, to include curve layouts. SPC Green gained experience as a field-crew chief. The FED gained much needed field data that should prove useful any time projects requiring survey data are undertaken by their office. In addition, all personnel assigned to the project and the engineer company (topographic) were awarded a certificate of appreciation from the depot commander.

7. TECHNICAL DIFFICULTIES. Most of the technical problems encountered were a direct result of the vast number of deeds involved. Many of those deeds listed magnetic bearings, while others used true bearings. Ordinarily this would have been no problem, but the catch was that out of all the deeds, only two specified what type of bearings they were listing. This left a large jigsaw puzzle with many variables. It became a matter of trial and error until the crew was finally able to get the boundary to close on itself. Another problem encountered was that one of the reference drawings provided by FED had the numbers within a given distance transposed; that is, 1,307 feet was really 1,370 feet. Additional problems were encountered when the only EDME went down and no replacement was available. The problems encountered in this area were due directly to a lack of training in taping procedures. This problem was resolved after about two days of intensive on-site training.

8. ADMINISTRATIVE/OTHER PROBLEM AREAS. The largest single problem encountered was the vehicle-maintenance support. The support that was promised verbally by the NCAD, TMP never developed. It is strongly recommended that a written agreement be established during the recon phase of all future projects. As for the problems encountered with the vehicles (for example, not starting or faulty exhaust systems), it is unclear how they could have gone through a complete maintenance check before departing for the project and still be in such a poor state of repair. The only other real problem encountered was the repeated adverse weather. In total, 13 work days were lost to snow, ice, rain, or fog.

Figure 11-9. Sample Annex E (End-of-Project Report) (continued)

9. SUMMARY. All in all, this was an excellent project. It fulfilled a vast amount of training requirements in a wide variety of skills. Weaknesses in the equipment department became very obvious. These weaknesses included a need for hand-held radios, medium- or long-range EDME, and four-wheel-drive vehicles.

JOHN LOPEZ
SSG, US Army
Squad Leader

Enclosures (not included with this sample)

Figure 11-9. Sample Annex E (End-of-Project Report) (continued)

Appendix A

Mensural Conversion Charts

This appendix complies with current army directives, which state that the metric system will be incorporated into all new publications. *Table A-1* is a metric conversion chart and *Table A-2* shows conversion factors for temperature, angles, and time.

Table A-1. Metric Conversion Chart

US Units	Multiplied By	Equals Metric Units	Metric Units	Multiplied By	Equals US Units
Length					
Inches	2.5400	Centimeters	Centimeters	0.39370	Inches
Inches	25.4001	Millimeters	Millimeters	0.03937	Inches
Feet	0.3048	Meters	Meters	3.28080	Feet
Yards	0.9144	Meters	Meters	1.09360	Yards
Miles	1.6093	Kilometers	Kilometers	0.62140	Miles
Miles, Nautical	1.8532	Kilometers	Kilometers	0.53960	Miles, Nautical
Area					
Square miles	2.590	Square kilometers	Square kilometers	0.38500	Square miles
Volume					
Gallons	3.7854	Liters	Liters	0.26420	Gallons
Mass (Weight)					
Pounds	0.4536	Kilograms	Kilograms	2.20460	Pounds

Table A-2. Temperature, Angle, and Time Conversion Chart

Units	Multiplied By	Equals	Units	Multiplied By	Equals
Temperature					
Degrees (F) - 32	0.5556	Degrees (C)	Degrees (C) + 17.8	1.8000	Degrees (F)
Angle					
Degrees (angular)	17.7778	Mils	Mils	0.0562	Degrees (angular)
Time					
Seconds	0.001	Milliseconds	Milliseconds	1,000	Seconds
Seconds	0.000000001	Nanoseconds	Nanoseconds	1,000,000,000	Seconds

Appendix B

Control-Survey Standards

This appendix is designed as a quick reference for platoon leaders. It summarizes the standards for control surveys that were discussed in Chapters 6, 7, and 8.

DIFFERENTIAL LEVELING

B-1. Differential leveling is the conventional method of leveling for the propagation of orthometric heights. *Table B-1 and Tables B-2 and B-3, pages B-2 and B-3,* show the overall standards and specifications for differential leveling.

Table B-1. Equipment Standards

Requirement	Order and Class				
	1st, I	1st, II	2nd, I	2nd, II	3rd
Level	0.2 mm/km spirit level	0.4 mm/km electronic bar code	Automatic level with parallel-plate micrometer or 0.4 mm/km electronic bar code	0.8 mm/km automatic level with parallel-plate micrometer or electronic bar code	3-wire automatic level
Staff construction	Rigid invar	Rigid invar	Rigid invar	Rigid invar	Wood or metal
Staff graduation interval (mm)	5	5	5 or 10	5 or 10	10
Tripod construction	Rigid	Rigid	Rigid	Rigid	Rigid
Bubble attached to staff	Yes	Yes	Yes	Yes	Yes
Solid, portable change points	No	No (route is premarked)	Yes	Yes	Yes
Umbrella for level	Yes	Yes	Yes	Yes	No

Table B-2. Equipment Testing

Requirement		Order and Class				
		1st, I	**1st, II**	**2nd, I**	**2nd, II**	**3rd**
System test before commencement		Yes	Yes	Yes	Yes	Optional
Maximum standard error in the line of sight (mm/m)		0.05	0.05	0.05	0.05	0.1
Vertical collimation check	Frequency	Daily	Daily	Daily	Daily	Daily
	Maximum collimation error (mm/m)	0.02	0.02	0.02	0.02	0.04
Level cross-hair verticality check		Yes	Yes	Yes	Yes	Yes
Staff calibration standard		N	N	N	M	M
Time between calibration (years)		1	1	NA	NA	NA
Staff bubble verticality to be within		10′	10′	10′	10′	10′

LEGEND:

M = Manufacturer's standard
N = National standard

Table B-3. Observation and Reduction Requirements

Requirement	Order and Class				
	1st, I	1st, II	2nd, I	2nd, II	3rd
Instrument leveled by an unsystematic method	Yes	Yes	Yes	Yes	Yes
Leap-frog system of progression used	Yes	Yes	Yes	Yes	Yes
Staff readings recorded to nearest (mm)	0.01	0.01	0.1	0.1	1
Temperature recorded	Start, middle, finish	Start, middle, finish	At start and finish of each leveling run and at pronounced changes of temperature		
Maximum length of sight (m)	50	60	60	70	90
Minimum ground clearance of line of sight (m)	0.5	0.5	0.5	0.5	0.5
Backsight and foresight lengths to be equal within (m)	2	5	5	10	10
Observation time	Before 1000 and after 1400	Before 1000 and after 1400	Before 1000 and after 1400	Any time, provided atmospheric conditions allow positive resolution of staff graduation	
Two-way leveling	Yes	Yes	Yes	Yes	Yes
Even number of instrument setups between BMs	Yes	Yes	Yes	Yes	Yes
Maximum section misclosure (mm)	$3\sqrt{km}$	$4\sqrt{km}$	$6\sqrt{km}$	$8\sqrt{km}$	$12\sqrt{km}$
Maximum loop misclosure (mm)	$4\sqrt{km}$	$5\sqrt{km}$	$6\sqrt{km}$	$8\sqrt{km}$	$12\sqrt{km}$
Minimum number of BMs	3	3	3	3	3
Double-leveled BM	Yes	Yes	Yes	Yes	Yes
Maximum BM misclosure (mm)	$4\sqrt{km}$	$5\sqrt{km}$	$6\sqrt{km}$	$8\sqrt{km}$	$12\sqrt{km}$
Orthometric correction (collimation) to be applied	Yes	Yes	Yes	Yes	Yes

HORIZONTAL-ANGLE MEASUREMENT

B-2. The observation requirements for horizontal-angle measurements are shown in *Table B-4, page B-4*. Adherence to these requirements should ensure that the appropriate level of precision is achieved.

Table B-4. Observation Requirements

Requirement			Order and Class				
			1st	2nd, I	2nd, II	3rd	3rd, II
Required time of day	2 hours either side of sunrise/set		Yes	Yes	NA	NA	NA
	Any time except 1200 to 1500		NA	NA	Yes	NA	NA
	Any time (subject to checks)		NA	NA	NA	Yes	NA
Instrument least count			0.2″	0.2″	1.0″	1.0″	1.0″
Horizontal zero settings	0.2″ theodolite		Yes	Yes	NA	NA	NA
	1″ theodolite		NA	Yes	Yes	Yes	Yes
Sets	Minimum number of positions (horizontal)		16	16	8[1] / 12[2]	4	2
	Number observations (vertical)		3	3	2	2	2
Field checks	Horizontal	Ranges between each set: standard deviation of mean should never exceed	0.4″	0.5″	0.8″	1.2″	2.0″
		Ranges within each set: standard deviation of mean should never exceed	4″	4″	5″	5″	5″
	Vertical	Number of observations	3	3	2	2	2
		Maximum spread	10″	10″	10″	10″	20″
	Infrared distance	Number of observations	10	10	10	10	10
Minimum number of network control points			4	3	2	2	2
Azimuth closure (arc seconds)			$1.7\sqrt{N}$	$3\sqrt{N}$	$4.5\sqrt{N}$	$10\sqrt{N}$	$12\sqrt{N}$
Closure ratio			1:100,000	1:50,000	1:20,000	1:10,000	1:5,000
Position closure			$0.04\sqrt{km}$	$0.08\sqrt{km}$	$0.20\sqrt{km}$	$0.40\sqrt{km}$	$0.80\sqrt{km}$

[1]If using a 0.2″ theodolite.
[2]If using a 1″ theodolite.

LEGEND:
N = number of stations

TRIGONOMETRIC OBSERVATIONS

B-3. Trigonometric observations are used to determine trigonometric elevations. To achieve a desired order of trigonometrical elevation, use the procedures and standards for the particular observation type (for example, vertical angle or distance) unless specified otherwise in *Table B-5*.

Table B-5. Observation Requirements

Requirement		Order		
		1st	2nd	3rd
Simultaneous reciprocal		Yes	Yes	Optional
Nonsimultaneous reciprocal		NA	Yes	Optional
One-way observation		NA	NA	Yes
Observation time	>16 km	1400 to 1600	1400 to 1600	1400 to 1600
	<16 km	1000 to 1600	1000 to 1600	1000 to 1600
Number of sets		2	2	1
Number of pointings (per set)		6	6	6
Maximum range per set (in)		6	6	8
Meteorological observation		Yes	Yes	Yes

GPS TECHNIQUES

B-4. There are two fundamental GPS techniques—relative and absolute-point positioning. The recommended practices for the GPS refer only to relative positioning. Relative positioning requires two or more GPS receivers. The two fundamental types of GPS receivers are navigational and survey (or geodetic). The receivers are distinguished by the accuracy level and type of measurements taken during surveys. Many receivers are capable of a number of measurement types. Pseudorange and carrier-phase measurements are the two fundamental types of measurements made with GPS receivers.

RELATIVE-POSITIONING TECHNIQUES

B-5. Relative-positioning techniques can be divided into two main groups—static and kinematic. The fundamental difference is that kinematic techniques require maintaining lock throughout the survey after ambiguity resolution. These static and kinematic techniques employ carrier-phase measurements. Since a carrier-beat-phase measurement is the only type that offers a sufficient precision in geodetic positioning at third order and higher, the use of receivers that measure the carrier phase is mandatory. Static and kinematic techniques can be grouped as follows:

- The static group can be divided into the following techniques:
  - Static (also referred to as classic static).
  - Pseudokinematic (for example, intermittent static, pseudostatic, or reoccupation kinematic).
  - Rapid static (also referred to as quick static or fast static).
- The kinematic group can be divided into the following techniques:
  - Stop-and-go kinematic (also referred to as intermittent kinematic or semikinematic).
  - Kinematic (also referred to as continuous kinematic).
  - OTF/ (also referred to as ambiguity-resolution OTF).

B-6. A third group of relative-positioning techniques is based on pseudorange measurements. These techniques, either in postprocessed or real-time modes,

are referred to as DGPS and are generally not used for precise control surveys. DGPS is used for accuracies of 2 to 5 meters. Precise DGPS is used for accuracies of 1 meter or less.

B-7. By combining carrier-phase measurements with pseudorange measurements, it is possible to reach higher accuracies with DGPS techniques. While GPS measurements are receiver dependent, the selection of observation techniques is dependent on the precision required and the reduction process to be used.

NETWORK DESIGN AND GEOMETRY

B-8. When planning a GPS-S, the first step is to choose the appropriate technique for the precision required. *Table B-6* provides a guide for what technique to use to achieve a particular order and class of survey. *Table B-7* provides references to the order and class of survey.

Table B-6. Positioning Techniques

Technique	Order and Class			
	1st	2nd, I	2nd, II	3rd
Static	Yes	Yes	Yes	Yes
Rapid static	NA	NA	Yes	Yes
Pseudokinematic	NA	NA	NA	Yes
Stop and go	NA	NA	NA	Yes

B-9. The location and distribution of points in a GPS-S do not depend significantly on factors such as network shape or intervisibility but rather on an optimum layout with sufficient redundancy for carrying out the intent of the survey. The intent of the network design should be to—

- Locate new points so that the line of sight between them is clear (when possible).
- Provide error control in the minimum-constraint solution (to enable data validation) and analysis of the accuracy of the survey.
- Produce tie-offs for integrating the survey into previously established control.
- Locate ties to points with existing orthometric heights.

B-10. Redundancies play an important role in fulfilling this intention. All GPS-Ss must be connected to the existing control, the NGS, or the local project to ensure survey integration, legal tractability, and quality assurance. If established control stations are not available in the vicinity of the survey, bring control to the appropriate accuracy by using GPS or conventional techniques. When selecting established stations to connect to, give preference to the highest order of the nearest, established permanent marks (or geodetic stations) that are easily accessible. Connection should be made to a minimum of three points with suitable MSL heights, preferably enclosing the survey, and a minimum of two points with established (horizontal) coordinates. Additional points are to be connected to obtain quality control, with preference

Table B-7. Positioning References

Reference		Order and Class			
		1st	2nd, I	2nd, II	3rd
Minimum station spacing[1] (km)		5	1	0.5	0.2
Typical station spacing[2] (km)		100-500	10-100	0.5-10	0.1-5
Independent occupations per station[3]	at least 3 times (% of total stations)	50%	40%	20%	10%
	at least 2 times (% of total stations)	100%	100%	100%	100%
Minimum common satellites		4 satellites			
Minimum PDOP required		Less than 10 after resolution of ambiguities			
Minimum satellite elevation		15°			
Data rate		Optional			
Minimum observation period (static)[4]		120′	60′	45′	30′
Minimum independent baselines at each station		3	3	2	2

[1]The values relate to the use of conventional equipment and proprietary software.
[2]Independent occupations per station may be back to back, but the antenna should be reset for each occupation. Antenna heights are to be changed by at least 0.1 to 0.2 meter unless set up on a pillar. The fully specified minimum-observation time should be met with each occupation.
[3]For example, for a second-order, Class II network, aim for 20 percent of stations to be occupied at least three times and 100 percent of stations to be occupied at least twice.
[4]As a rule, 30 minutes as a definitive minimum plus about 2 minutes per kilometer.

given to coordinated marks that enclose the surveyed area and height points spaced throughout the area. A least-squares adjustment of the control survey must be performed.

B-11. The planning of the observations should be such that the error budget is sufficiently minimized. Consider the error budget of a double difference, which consists of error sources affecting measurements; error sources that depend upon the site and the type of instrumentation used; and error sources resulting from reduction, adjustment, and transformation.

B-12. Error sources that affect measurements are tropospheric refraction, ionospheric refraction, and orbit errors. The main error sources affected by the site's location and the instrumentation are centering and antenna-height accuracy, antenna-phase center variation, 3D differential-antenna offset, multipath and imaging errors, differential tropospheric delay, and differential

ionospheric delay when using single-frequency solutions. The main error sources resulting from reduction, adjustment, and transformation are the selection of the wrong ambiguities, insufficient redundancy for quality control of the transformation solution, and a geoid model that is too simple or based on too sparse data.

REDUNDANCY

B-13. Redundancy in the observations is the best way of dealing with most of the error sources. Specific observing procedures and differencing techniques can eliminate other error sources that are more systematic. Error sources are reduced by careful site selection, averaging, and sufficient observation time to allow geometry change. Night observations or the use of dual-frequency receivers can minimize ionospheric errors. Antenna offset can be minimized by ensuring identical antenna orientations. Orbit errors are minimized by the use of precise ephemerides.

B-14. The concept of redundancy (when using a GPS) refers to such things as the following:

- Increasing the percentage of points with multiple occupations.
- Tying multiple baselines into one point.
- Observing common baselines between figures.
- Closing onto existing control.
- Computing the polygon closure using data derived from different sessions.
- Observing more than the minimum number of satellites.
- Averaging through observing a sufficient number of epochs.

B-15. Independent reoccupation of the same point (after a sufficient lapse of time) to observe a different baseline is the most common way of detecting gross error. An alternative to independent reoccupations is the inclusion of conventional observations of appropriate accuracy (for example, to create ties between unclosed GPS polygons in the same adjustment). In a control survey, all observations should be checked by the redundancies included in the network. The configuration of the network should involve the observation of closed figures, and closure polygons must combine data from different sessions.

INDEPENDENT BASELINES

B-16. An independent-baseline measurement in an observation session is achieved when the data used are not just different combinations of the same data used in computation of other baseline vectors observed in that session. In an observation session using five receivers, the total number of baselines can be computed as follows:

$$\textit{Total number of baselines} = \frac{n(n-1)}{2} = \frac{5(5-1)}{2} = 10$$

where—
n = the number of receivers

B-17. However, only four *(n - 1)* of those baselines are independent. The remainders *(10 - 4 = 6)* are formed from combinations of phase data used to compute the independent baselines. The results from observations of the same baseline made in two different sessions are independent. Generally, independent-baseline processors assume that there is no correlation between independent vectors. Trivial baselines may be included in the adjustment to make up for such a deficient statistical model. If the mathematical correlation between two or more simultaneously observed vectors in a session is not carried in the variance-covariance matrix, the trivial baselines take on a bracing function that simulates the effect of the proper correlation statistics. And, at the same time, introduce a false redundancy in the count of the degrees of freedom. In this case, the number of trivial baselines in an adjustment should be subtracted from the number of redundancies before the variance factor (variance of unit weight) is calculated. If this approach is not followed, trivial baselines will be excluded from the network altogether.

INCORPORATION OF GPS SURVEYS

B-18. To incorporate 3D GPS-Ss into local horizontal and vertical data (WGS-84 and MSL), the number, type, and distribution of control points to which connections should be made must be considered. A determination of which technique to use to derive orthometric heights from ellipsoidal heights is necessary. The technique will influence the choice of well-placed strategic points with known orthometric heights that should be observed. Alternatively, orthometric heights can be brought to selected points in the GPS network.

B-19. For a small area (a few kilometers across) with a smooth geoid, solving for transformation parameters brings about a de facto surface fit (tilting the ellipsoid so that it is parallel with the geoid). When a single value for the geoid-spheroid separation is used at the orthometric-control points, it is assumed that the geoid is as smooth as the ellipsoid. For larger areas, choose between a geodetic-leveling, a geopotential model-based, a gravimetric, or a geometrically derived geoid.

B-20. The classification of GPS results (including height) is generally expressed using a linear propagation method, unless requirements specifically call for height classification using differential leveling. In both cases, the class and the order are assigned separately for horizontal and vertical control.

SYSTEM TESTING

B-21. A system test is recommended to qualify equipment, techniques, and error modeling for a particular accuracy. Evidence of a test may be required after acquisition of new equipment or software, when trying new techniques, or as justification of a chosen method of error modeling. This evidence serves—

- As a justification of observing and processing techniques.
- To validate (under similar conditions) the same equipment, the software, and the observation method.
- To justify the error modeling.
- As a justification of a multiplier used to increase the baseline-vector variance-covariance matrix elements when these are unrealistic.
- To validate data when combining results from different equipment and software.

B-22. The total GPS process is comprised of the following four distinct components:

- Satellites.
- Receiver hardware.
- Field procedures.
- Software.

B-23. The following procedures describe a system test that considers all of the components of the system and are designed to evaluate the performance of multiple receivers used in a differential mode. The field practices and system test have to reflect the particular observing strategies (for example, static, rapid static, or stop and go) that are employed on a project. The equipment should be operated according to the manufacturer's specifications. The test consists of a measurement of a small test network and the ongoing analysis of production results.

Measurement of a Small Test Network

B-24. Control should be established on at least one baseline of the small test network. This control consists of a measurement of—

(n + 1) stations and (n + 1) independent baselines

where–
n = the number of receivers

B-25. The test network observed should be a polygon with station spacing not less than 50 meters and not more than 10 kilometers. The independently observed baselines should be processed, baseline by baseline, to produce differences in Cartesian coordinates in the satellite datum (ΔX, ΔY, and ΔZ) for each baseline. The summation of these differences, for any closed figure, will give a preliminary indication of the performance of the total GPS and is an initial, minimum field analysis. At the first opportunity, performance of a more rigorous approach is essential. The vectors and their associated variance-covariance matrices should be adjusted by the least-squares method to obtain a more complete and comprehensive report on the equipment test. If the results meet the manufacturer's specification, then the manufacturer's specification can be adopted by the user as the measure of the precision attainable with the system. If not, the user's measurement system must be modified to meet the manufacturer's specification or the lower precision must be accepted.

Analysis of Production Results

B-26. The measurement of a GPS-S network involves the observation of closed figures. An analysis of the closure of all figures should be carried out to ensure that each figure closes within the expected precision. Closure polygons must combine data from different sessions. A network adjustment is the most efficient way to confirm agreement with established control at the required accuracy.

OBSERVATION REQUIREMENTS

B-27. The observation duration has to be long enough to resolve ambiguities and, depending upon the required accuracy, it also has to be long enough to average out multipath effects. This is especially true for second-order and higher surveys. It is preferred to observe five or more satellites, although most techniques will work with a minimum of four satellites. The extra satellites give protection against loss of lock from one of the satellites and speeds up the ambiguity-resolution process.

B-28. Equipment users should refer to the manufacturer's specifications for DOP. DOP is an indicator of the geometrical strength of a four-or-more satellite constellation as it applies to instantaneous point-position fixing. PDOP refers to the three position coordinates (while GDOP includes a term for the clock offset). The lower the number, the better the geometry for achieving an accurate point position. Use caution in applying this parameter as an absolute acceptance or rejection criterion, particularly in relative GPS positioning where longer observation periods remove most common biases. However, sufficiently changing geometry during a recording session assists in the determination of ambiguities. Once the ambiguities are resolved, PDOP should be kept low.

B-29. The minimum satellite elevation is 15°. This requirement can be reduced to 10° for third-order and lower surveys. It is necessary to ensure that the receiver-data rates are the same or a common integer factor of 60″, which results in sufficient common data to resolve ambiguities. Give special attention when processing data collected from different types of receivers (5″, 10″, 20″, or 30″ are typical). The time intervals must also be simultaneous.

B-30. When a reflective environment (horizontal, vertical, or skew) cannot be avoided, refrain from using both low satellites and satellites within half an hour either side of culmination for that site. Occupy the position (and the others in the same session) for a minimum number of minutes that is equal to 40 divided by the perpendicular distance to the suspected reflecting surface. This will generally increase the chance of capturing at least one full swing of the interference. When third-order and higher accuracies are required and a site with a reflective environment cannot be avoided, it is worthwhile to average longer observation times of the interference (virtually the equivalent of a static survey).

B-31. Manufacturers generally give a guide for the average time required to resolve ambiguities. When these times are shorter than the minimum observation duration recommended above for reducing multipath, the observation duration should be lengthened (following the above guide) if in a reflective environment.

B-32. Field procedures are substantially the same as recommended above when using static and kinematic techniques for requirements less stringent than second order. This is because relative GPS can routinely deliver second-order accuracy. Refer to the manufacturer's manual for any additional requirements. RTK carrier-phase techniques already impact on the first 10 kilometers of second- and lower-order surveys. At this stage of the analysis, different criteria should be applied depending on the project requirements. A summary of the various observational techniques follow.

Static

B-33. Static surveying uses two or more receivers that remain stationary for 30 minutes or more, depending on the line length and the required accuracy. Carrier-phase observations are made, and to enhance the carrier-phase ambiguity resolution, the satellite geometry should be given time to change. Observations are made (with two or more receivers that have a common data rate) to four or more satellites with elevations above 15°. An accuracy of 0.1 to 10 ppm is possible, depending upon the quality of the data, the processing, and the length of the baseline vectors.

Rapid Static

B-34. Rapid-static surveying uses various combinations of observations (for example, C/A-, P- or Y-code range data and L1 and L2 carrier-range data). If the view of the sky is limited, rapid-static surveying depends on least-squares ambiguity estimation for a determination of the correct ambiguities. The reliability is enhanced when data from six or more satellites are used and multiple occupations are made at different sidereal times. Dual-frequency receivers are advantageous because they allow various data combinations (for example, widelaning) in estimating a solution. Occupation times of 2′ to 10′ is required to obtain centimeter-level accuracy for vector lengths up to 10 kilometers.

Stop-and-Go Kinematic

B-35. Stop-and-go-kinematic surveying involves alternately stopping and moving of one receiver, with the main interest being in the stopped positions. This technique relies upon determining baselines, with a minimum amount of data, by resolving the carrier-phase ambiguities at the beginning and maintaining lock throughout the survey.

B-36. In stop-and-go surveying, two receivers observe a predetermined baseline and perform an antenna swap. The antenna swap is used to obtain the baseline in a matter of a few minutes. The process where carrier-phase ambiguities between satellites and receivers are resolved before the other receiver starts roving is called initialization.

B-37. The second receiver then starts roving, staying stationary over points for a few seconds to a few minutes. Constant satellite lock should be maintained on at least four satellites and is the major factor with this technique, which makes it suitable for open terrain only. An accuracy of 20 to 30 millimeters is possible, and accuracies of 1 to 10 ppm have been quoted. Good geometry and the observation of a minimum of a dozen epochs at each survey point are important for this technique. The short occupation times give a rapid drop-off in height accuracy. Good planning is advantageous, and the occasional occupation of a known point is necessary in case the geometry deteriorates or a cycle slip occurs before the survey can be closed. RTK methods fit this category, because RTK presupposes access to actual phase observations at a site with known coordinates, to produce a double-difference, ambiguity-fixed solution in real time.

Kinematic

B-38. Kinematic surveying proceeds as in stop-and-go-kinematic surveying but without stopping. Vectors are created that are associated with single epochs in time.

Pseudokinematic

B-39. Pseudokinematic surveying does not depend on continuous lock of the rover(s) while traveling but requires continuous lock while stationary. The same point is reoccupied after 1 to 2 hours by the same receiver and again for about 3′ to 10′. This creates a situation of having one deliberate cycle slip dividing the data. This paired observation is defined as a single station observation. Obtaining the change in satellite geometry enhances the ambiguity resolution. A constant antenna height allows the two data sets to represent measurements to the same physical point in space.

B-40. Accuracies can reach 20 to 30 millimeters depending upon satellite availability and PDOP. Accuracies of 2 to 20 ppm have been quoted. Single- or dual-frequency carrier-phase receivers can be used. Dual-frequency observations, although not necessary, enhance the determination of the ambiguities. For practical purposes, maximum vector lengths are about 15 kilometers.

B-41. While not as productive as the stop-and-go-kinematic technique, the pseudokinematic technique does not rely on maintaining satellite lock. The pseudokinematic technique is much more practical in areas where trees, buildings, tunnels, overpasses, or other obstructions are likely to interrupt the signal or where interstation access is slow.

OTF/RTK Kinematic

B-42. OTF/RTK surveying uses a continuous kinematic technique, which is ideal when the roving receiver cannot stop for an initialization. OTF/RTK does not need initialization; it performs auto-reverse processing as soon as the ambiguities are resolved. Contrary to the definition of kinematic techniques, OTF/RTK does not need initialization at the start. A sufficient number of dual-frequency observations to, preferably, five satellites with good PDOP are required. After the dual-frequency observations, only four satellites are required. Vectors are created that are associated with single epochs in time. For distances up to 20 kilometers, a conventional static or rapid-static setup is required as initialization. Single-frequency techniques are also used with OTF/RTK.

DGPS

B-43. The term differential is generally used with pseudorange techniques that resolve the errors in a single position. One of these techniques is real-time DGPS, which resolves the errors in real time. This is in contrast to the vector approach of relative GPS, which is achieved by observing C/A-code-phase (pseudorange) error measurements at one or more known stations and then transmitting the data to the remote station(s).

B-44. *Table B-8* shows procedures for static- and kinematic-GPS techniques. Occupation time at a point is equipment and distance dependent and is sometimes indicated by the receiver. The longer the occupation time the greater the chance that ambiguities are resolved and that instrument noise and multipath interference is averaged out, which gives more reliability.

Table B-8. Static and Kinematic GPS

Technique		Procedure					
		Initiali-zation	Dual/ Single Frequency	Common Satellites	Continuous Lock During Travel	Maximum Spacing	PDOP[5]
Static GPS	Static	No	Optional	≥4	No	500 km	Note 5
	Pseudo-kinematic	No	Optional	≥4[1]	No, only at base	<20 km	Note 5
	Rapid static	No	Optional[4]	≥4	No	<10 km	Note 5
Kinematic GPS	Kinematic	Yes[2]	Optional[3]	5 preferred, 4 possible	Yes	<20 km	<10
	Stop-and-go	Yes	Single	5 preferred, 4 possible	Yes	<20 km	<10
	OTF/RTK	No	Dual or single	5 preferred, 4 possible	Preferred, but not necessary	<20 km, 7-10 km best	NA

[1]Four satellites are required in both observation sessions; five or more satellites are an advantage.

[2]Observe a known baseline (at beginning or end) and solve all ambiguities, do an antenna swap, or return to the starting point at the end of the survey.

[3]Dual-frequency receivers give an advantage.

[4]Dual-frequency P-code will enhance the speed of the solution.

[5]Sufficiently changing geometry during a recording session assists in the determination of ambiguities, and once they are resolved, PDOP should be kept low. In the kinematic techniques, the ambiguities are already resolved through the initialization and the PDOP should be kept low from that moment (refer to the manufacturer's specifications).

REDUCTION AND ANALYSIS PROCEDURES

B-45. The quality of the results of a GPS-S is determined by both the method of observation (including choice of equipment) and the quality of the reduction, adjustment, and transformation procedures. The initial station position of the datum for any baseline calculation should not exceed 10 meters for each ppm accuracy required and is best obtained by transformation or by connection to another point with known coordinates in the satellite datum.

B-46. The reduction procedures outlined in *Table B-9* give a broad overview of the essential components to consider when undertaking the reduction of GPS data. Adhering to the procedures in this table does not remove the necessity for statistical analysis of the results. The table format gives a clear picture of the specific reduction requirements for achieving a given geometric standard of survey. These reduction procedures indicate the minimal requirements.

Table B-9. Recommended Processing Requirements

Observation Distance	Order and Class				
	1st	2nd, I	2nd, II	3rd, I	3rd, II
<8 km	D[1], DD, FX	D[1], DD, FX	S, DD, FX	S, DD, FX	S, DD, FX
8 to 24 km	D, DD, FX	D, DD, FX	D, DD, FX	D, DD, FX	S, DD, FX
25 to 49 km	D, DD, FX-FT	D, DD, FX-FT	D, DD, FX-FT	D, DD, FX-FT	D, DD, FX-FT
50 to 90 km	D, DD,FT	DD or T[2], D, FT	DD or T[2], D, FT	DD or T[2], D, FT	DD or T[2], D, FT
90> km	D, T	D, T	D, T	D, T	D, T

[1]Use L1 solutions from a dual-frequency receiver to enable ambiguity resolution by widelaning.

[2]Double-difference solutions are preferred. Triple-difference solutions are increasingly acceptable as the distance increases, and the observation length allows sufficient geometry change.

LEGEND:
D = dual-frequency receiver
DD = double-difference solution
FT = ambiguity-float solution (with repaired cycle slips)
FX = ambiguity-fixed solution
S = single-frequency receiver
T = triple-difference solution
(with sufficient observation length to allow for a change of geometry)

B-47. Because of the effect of the ionosphere, dual-frequency receivers are used on lines over a certain length. L1-only solutions often show less noise for vector lengths below 10 kilometers. Single-frequency receivers can still satisfy high-order survey requirements up to 20 kilometers but need an increasing number of hours of observation if a higher order of survey is required or if longer baselines are observed. Dual-frequency ambiguity-fixed L1/L2 solutions in their ion-free linear combination are usually obtained for vector lengths from 10 to 50 kilometers. An ambiguity-fixed solution is preferred, but as the distance increases, it becomes harder to achieve. Ion-free, ambiguity-float L1/L2 solutions have become more common for vectors of 40 to 90 kilometers. For longer baselines, triple-difference solutions can be used if the observation time is long enough to enable a sufficient change in the satellite

geometry during the recording session. As a guide, use 30 minutes as a minimum plus an additional 20 minutes per each 10 kilometers of baseline length.

PROCESSING AND ANALYSIS OF MINIMALLY CONSTRAINED ADJUSTMENTS

B-48. When processing minimally constrained adjustments, the processing software must be able to produce the variance/covariance statistics of the observed Cartesian vectors so that the adjustments can be input into a 3D adjustment program. A least-squares adjustment must be performed when deriving values for control surveys. The software must be capable of determining transformation parameters between the observed Cartesian vectors and the local geodetic system.

B-49. Error ellipses should be calculated after a minimally constrained least-squares adjustment. These calculations prove the quality of the network design rather than the quality of the observations. The error ellipses should be scaled by the a priori variance of unit weight (generally equal to one), unless the a posteriori estimate of variance does not pass the chi-square test. In the latter case, the observations, the statistical model, or even the mathematical model should be examined and the problem remedied and the adjustment rerun. In the case of not being able to remedy the situation, the error ellipses should be scaled by the a posteriori variance factor.

B-50. To confirm the quality of the observations, the standardized residuals should be checked for outliers. The checking of the statistics often involves critical evaluation of the a priori standard deviations of the observations. If the baseline variance/covariance matrix is routinely modified by a multiplier, documentation of a measurement over a test network may be required as confirmation of the multiplier used.

B-51. To conform to the internal consistency requirements for a particular geometric accuracy, the error ellipses should confirm the capability of the network design to meet the specifications. The standardized residuals and the estimate of variance should confirm that the observations have actually met the required standard.

B-52. All points in a survey should conform to the specifications belonging to the relevant classification. This applies whether the points are connected by baseline observations or not. This is also valid when relative accuracy values are calculated to points with previously established coordinate values. Geoid-separation values are applied to orthometric heights of points that will be constrained in the transformation and adjustment.

DERIVATION OF GEOID-SEPARATION VALUES

B-53. The following four methods are used for determining geoid heights:

- **Geodetic-leveling-geoid method.** The use of a geodetic-leveling geoid.
- **Global-geopotential-model method.** The use of different types of global-geopotential models derived from gravity and active or passive satellite information.

- **Gravimetric method.** The use of an intensive grid of local gravity, together with a high-degree global-geopotential model.
- **Geometrically modeled geoid method.** The use of a geometrically modeled geoid by contouring geoid-height values derived from orthometric and ellipsoidal heights.

B-54. The relative accuracy of height values resulting from the global-geopotential-model method are dependent on the grid spacing of the geopotential model used. The spacing of points with observed local gravity in the gravimetric method and the spacing of leveled points in the geometrically modeled geoid method determine the relative accuracy.

B-55. The geodetic-leveling-geoid method is generally not accurate enough to convert GPS-ellipsoidal heights into orthometric heights but works well with height differences. The global-geopotential-model method is useful in the case of long baselines in an area with a smooth geoid and scarce orthometric-height points. The gravimetric method is the most accurate when a sufficient dense grid of gravity information is available. The geometrically modeled geoid method is the most accurate when sufficient orthometric information is available. When orthometric information is scarce and the geoid is not smooth, surface fitting and contouring are not recommended for short distances (10 kilometers or less).

TRANSFORMATION AND CONSTRAINED ADJUSTMENTS

B-56. The next step is the derivation of transformation parameters between the minimally constrained adjusted vectors and the selected constrained points in the local geodetic system. This is usually carried out together with a constrained least-squares adjustment. This adjustment is subjected to the same analysis as the minimally constrained adjustment. Error ellipses are calculated again and the network is allocated an accuracy order that enables its orderly integration with the database that contains the existing data set of established coordinates.

NOTE: Refer to EM 1110-1-1003 for a complete sample of an adjustment statistics summary.

Appendix B

Control-Survey Standards

This appendix is designed as a quick reference for platoon leaders. It summarizes the standards for control surveys that were discussed in Chapters 6, 7, and 8.

DIFFERENTIAL LEVELING

B-1. Differential leveling is the conventional method of leveling for the propagation of orthometric heights. *Table B-1 and Tables B-2 and B-3, pages B-2 and B-3,* show the overall standards and specifications for differential leveling.

Table B-1. Equipment Standards

Requirement	Order and Class				
	1st, I	1st, II	2nd, I	2nd, II	3rd
Level	0.2 mm/km spirit level	0.4 mm/km electronic bar code	Automatic level with parallel-plate micrometer or 0.4 mm/km electronic bar code	0.8 mm/km automatic level with parallel-plate micrometer or electronic bar code	3-wire automatic level
Staff construction	Rigid invar	Rigid invar	Rigid invar	Rigid invar	Wood or metal
Staff graduation interval (mm)	5	5	5 or 10	5 or 10	10
Tripod construction	Rigid	Rigid	Rigid	Rigid	Rigid
Bubble attached to staff	Yes	Yes	Yes	Yes	Yes
Solid, portable change points	No	No (route is premarked)	Yes	Yes	Yes
Umbrella for level	Yes	Yes	Yes	Yes	No

Table B-2. Equipment Testing

Requirement		Order and Class				
		1st, I	**1st, II**	**2nd, I**	**2nd, II**	**3rd**
System test before commencement		Yes	Yes	Yes	Yes	Optional
Maximum standard error in the line of sight (mm/m)		0.05	0.05	0.05	0.05	0.1
Vertical collimation check	Frequency	Daily	Daily	Daily	Daily	Daily
	Maximum collimation error (mm/m)	0.02	0.02	0.02	0.02	0.04
Level cross-hair verticality check		Yes	Yes	Yes	Yes	Yes
Staff calibration standard		N	N	N	M	M
Time between calibration (years)		1	1	NA	NA	NA
Staff bubble verticality to be within		10′	10′	10′	10′	10′

LEGEND:

M = Manufacturer's standard
N = National standard

Table B-3. Observation and Reduction Requirements

Requirement	Order and Class				
	1st, I	1st, II	2nd, I	2nd, II	3rd
Instrument leveled by an unsystematic method	Yes	Yes	Yes	Yes	Yes
Leap-frog system of progression used	Yes	Yes	Yes	Yes	Yes
Staff readings recorded to nearest (mm)	0.01	0.01	0.1	0.1	1
Temperature recorded	Start, middle, finish	Start, middle, finish	At start and finish of each leveling run and at pronounced changes of temperature		
Maximum length of sight (m)	50	60	60	70	90
Minimum ground clearance of line of sight (m)	0.5	0.5	0.5	0.5	0.5
Backsight and foresight lengths to be equal within (m)	2	5	5	10	10
Observation time	Before 1000 and after 1400	Before 1000 and after 1400	Before 1000 and after 1400	Any time, provided atmospheric conditions allow positive resolution of staff graduation	
Two-way leveling	Yes	Yes	Yes	Yes	Yes
Even number of instrument setups between BMs	Yes	Yes	Yes	Yes	Yes
Maximum section misclosure (mm)	$3\sqrt{km}$	$4\sqrt{km}$	$6\sqrt{km}$	$8\sqrt{km}$	$12\sqrt{km}$
Maximum loop misclosure (mm)	$4\sqrt{km}$	$5\sqrt{km}$	$6\sqrt{km}$	$8\sqrt{km}$	$12\sqrt{km}$
Minimum number of BMs	3	3	3	3	3
Double-leveled BM	Yes	Yes	Yes	Yes	Yes
Maximum BM misclosure (mm)	$4\sqrt{km}$	$5\sqrt{km}$	$6\sqrt{km}$	$8\sqrt{km}$	$12\sqrt{km}$
Orthometric correction (collimation) to be applied	Yes	Yes	Yes	Yes	Yes

HORIZONTAL-ANGLE MEASUREMENT

B-2. The observation requirements for horizontal-angle measurements are shown in *Table B-4, page B-4*. Adherence to these requirements should ensure that the appropriate level of precision is achieved.

Table B-4. Observation Requirements

Requirement			Order and Class				
			1st	2nd, I	2nd, II	3rd	3rd, II
Required time of day	2 hours either side of sunrise/set		Yes	Yes	NA	NA	NA
	Any time except 1200 to 1500		NA	NA	Yes	NA	NA
	Any time (subject to checks)		NA	NA	NA	Yes	NA
Instrument least count			0.2″	0.2″	1.0″	1.0″	1.0″
Horizontal zero settings	0.2″ theodolite		Yes	Yes	NA	NA	NA
	1″ theodolite		NA	Yes	Yes	Yes	Yes
Sets	Minimum number of positions (horizontal)		16	16	8[1] / 12[2]	4	2
	Number observations (vertical)		3	3	2	2	2
Field checks	Horizontal	Ranges between each set: standard deviation of mean should never exceed	0.4″	0.5″	0.8″	1.2″	2.0″
		Ranges within each set: standard deviation of mean should never exceed	4″	4″	5″	5″	5″
	Vertical	Number of observations	3	3	2	2	2
		Maximum spread	10″	10″	10″	10″	20″
	Infrared distance	Number of observations	10	10	10	10	10
Minimum number of network control points			4	3	2	2	2
Azimuth closure (arc seconds)			$1.7\sqrt{N}$	$3\sqrt{N}$	$4.5\sqrt{N}$	$10\sqrt{N}$	$12\sqrt{N}$
Closure ratio			1:100,000	1:50,000	1:20,000	1:10,000	1:5,000
Position closure			$0.04\sqrt{km}$	$0.08\sqrt{km}$	$0.20\sqrt{km}$	$0.40\sqrt{km}$	$0.80\sqrt{km}$

[1]If using a 0.2″ theodolite.
[2]If using a 1″ theodolite.

LEGEND:
N = number of stations

TRIGONOMETRIC OBSERVATIONS

B-3. Trigonometric observations are used to determine trigonometric elevations. To achieve a desired order of trigonometrical elevation, use the procedures and standards for the particular observation type (for example, vertical angle or distance) unless specified otherwise in *Table B-5*.

Table B-5. Observation Requirements

Requirement		Order		
		1st	2nd	3rd
Simultaneous reciprocal		Yes	Yes	Optional
Nonsimultaneous reciprocal		NA	Yes	Optional
One-way observation		NA	NA	Yes
Observation time	>16 km	1400 to 1600	1400 to 1600	1400 to 1600
	<16 km	1000 to 1600	1000 to 1600	1000 to 1600
Number of sets		2	2	1
Number of pointings (per set)		6	6	6
Maximum range per set (in)		6	6	8
Meteorological observation		Yes	Yes	Yes

GPS TECHNIQUES

B-4. There are two fundamental GPS techniques—relative and absolute-point positioning. The recommended practices for the GPS refer only to relative positioning. Relative positioning requires two or more GPS receivers. The two fundamental types of GPS receivers are navigational and survey (or geodetic). The receivers are distinguished by the accuracy level and type of measurements taken during surveys. Many receivers are capable of a number of measurement types. Pseudorange and carrier-phase measurements are the two fundamental types of measurements made with GPS receivers.

RELATIVE-POSITIONING TECHNIQUES

B-5. Relative-positioning techniques can be divided into two main groups—static and kinematic. The fundamental difference is that kinematic techniques require maintaining lock throughout the survey after ambiguity resolution. These static and kinematic techniques employ carrier-phase measurements. Since a carrier-beat-phase measurement is the only type that offers a sufficient precision in geodetic positioning at third order and higher, the use of receivers that measure the carrier phase is mandatory. Static and kinematic techniques can be grouped as follows:

- The static group can be divided into the following techniques:
  - Static (also referred to as classic static).
  - Pseudokinematic (for example, intermittent static, pseudostatic, or reoccupation kinematic).
  - Rapid static (also referred to as quick static or fast static).
- The kinematic group can be divided into the following techniques:
  - Stop-and-go kinematic (also referred to as intermittent kinematic or semikinematic).
  - Kinematic (also referred to as continuous kinematic).
  - OTF/ (also referred to as ambiguity-resolution OTF).

B-6. A third group of relative-positioning techniques is based on pseudorange measurements. These techniques, either in postprocessed or real-time modes,

are referred to as DGPS and are generally not used for precise control surveys. DGPS is used for accuracies of 2 to 5 meters. Precise DGPS is used for accuracies of 1 meter or less.

B-7. By combining carrier-phase measurements with pseudorange measurements, it is possible to reach higher accuracies with DGPS techniques. While GPS measurements are receiver dependent, the selection of observation techniques is dependent on the precision required and the reduction process to be used.

NETWORK DESIGN AND GEOMETRY

B-8. When planning a GPS-S, the first step is to choose the appropriate technique for the precision required. *Table B-6* provides a guide for what technique to use to achieve a particular order and class of survey. *Table B-7* provides references to the order and class of survey.

Table B-6. Positioning Techniques

Technique	Order and Class			
	1st	2nd, I	2nd, II	3rd
Static	Yes	Yes	Yes	Yes
Rapid static	NA	NA	Yes	Yes
Pseudokinematic	NA	NA	NA	Yes
Stop and go	NA	NA	NA	Yes

B-9. The location and distribution of points in a GPS-S do not depend significantly on factors such as network shape or intervisibility but rather on an optimum layout with sufficient redundancy for carrying out the intent of the survey. The intent of the network design should be to—

- Locate new points so that the line of sight between them is clear (when possible).
- Provide error control in the minimum-constraint solution (to enable data validation) and analysis of the accuracy of the survey.
- Produce tie-offs for integrating the survey into previously established control.
- Locate ties to points with existing orthometric heights.

B-10. Redundancies play an important role in fulfilling this intention. All GPS-Ss must be connected to the existing control, the NGS, or the local project to ensure survey integration, legal tractability, and quality assurance. If established control stations are not available in the vicinity of the survey, bring control to the appropriate accuracy by using GPS or conventional techniques. When selecting established stations to connect to, give preference to the highest order of the nearest, established permanent marks (or geodetic stations) that are easily accessible. Connection should be made to a minimum of three points with suitable MSL heights, preferably enclosing the survey, and a minimum of two points with established (horizontal) coordinates. Additional points are to be connected to obtain quality control, with preference

Table B-7. Positioning References

Reference		Order and Class			
		1st	2nd, I	2nd, II	3rd
Minimum station spacing[1] (km)		5	1	0.5	0.2
Typical station spacing[2] (km)		100-500	10-100	0.5-10	0.1-5
Independent occupations per station[3]	at least 3 times (% of total stations)	50%	40%	20%	10%
	at least 2 times (% of total stations)	100%	100%	100%	100%
Minimum common satellites		4 satellites			
Minimum PDOP required		Less than 10 after resolution of ambiguities			
Minimum satellite elevation		15°			
Data rate		Optional			
Minimum observation period (static)[4]		120′	60′	45′	30′
Minimum independent baselines at each station		3	3	2	2

[1]The values relate to the use of conventional equipment and proprietary software.
[2]Independent occupations per station may be back to back, but the antenna should be reset for each occupation. Antenna heights are to be changed by at least 0.1 to 0.2 meter unless set up on a pillar. The fully specified minimum-observation time should be met with each occupation.
[3]For example, for a second-order, Class II network, aim for 20 percent of stations to be occupied at least three times and 100 percent of stations to be occupied at least twice.
[4]As a rule, 30 minutes as a definitive minimum plus about 2 minutes per kilometer.

given to coordinated marks that enclose the surveyed area and height points spaced throughout the area. A least-squares adjustment of the control survey must be performed.

B-11. The planning of the observations should be such that the error budget is sufficiently minimized. Consider the error budget of a double difference, which consists of error sources affecting measurements; error sources that depend upon the site and the type of instrumentation used; and error sources resulting from reduction, adjustment, and transformation.

B-12. Error sources that affect measurements are tropospheric refraction, ionospheric refraction, and orbit errors. The main error sources affected by the site's location and the instrumentation are centering and antenna-height accuracy, antenna-phase center variation, 3D differential-antenna offset, multipath and imaging errors, differential tropospheric delay, and differential

ionospheric delay when using single-frequency solutions. The main error sources resulting from reduction, adjustment, and transformation are the selection of the wrong ambiguities, insufficient redundancy for quality control of the transformation solution, and a geoid model that is too simple or based on too sparse data.

REDUNDANCY

B-13. Redundancy in the observations is the best way of dealing with most of the error sources. Specific observing procedures and differencing techniques can eliminate other error sources that are more systematic. Error sources are reduced by careful site selection, averaging, and sufficient observation time to allow geometry change. Night observations or the use of dual-frequency receivers can minimize ionospheric errors. Antenna offset can be minimized by ensuring identical antenna orientations. Orbit errors are minimized by the use of precise ephemerides.

B-14. The concept of redundancy (when using a GPS) refers to such things as the following:

- Increasing the percentage of points with multiple occupations.
- Tying multiple baselines into one point.
- Observing common baselines between figures.
- Closing onto existing control.
- Computing the polygon closure using data derived from different sessions.
- Observing more than the minimum number of satellites.
- Averaging through observing a sufficient number of epochs.

B-15. Independent reoccupation of the same point (after a sufficient lapse of time) to observe a different baseline is the most common way of detecting gross error. An alternative to independent reoccupations is the inclusion of conventional observations of appropriate accuracy (for example, to create ties between unclosed GPS polygons in the same adjustment). In a control survey, all observations should be checked by the redundancies included in the network. The configuration of the network should involve the observation of closed figures, and closure polygons must combine data from different sessions.

INDEPENDENT BASELINES

B-16. An independent-baseline measurement in an observation session is achieved when the data used are not just different combinations of the same data used in computation of other baseline vectors observed in that session. In an observation session using five receivers, the total number of baselines can be computed as follows:

$$\textit{Total number of baselines} = \frac{n(n-1)}{2} = \frac{5(5-1)}{2} = 10$$

where—
n = the number of receivers

B-17. However, only four *(n - 1)* of those baselines are independent. The remainders *(10 - 4 = 6)* are formed from combinations of phase data used to compute the independent baselines. The results from observations of the same baseline made in two different sessions are independent. Generally, independent-baseline processors assume that there is no correlation between independent vectors. Trivial baselines may be included in the adjustment to make up for such a deficient statistical model. If the mathematical correlation between two or more simultaneously observed vectors in a session is not carried in the variance-covariance matrix, the trivial baselines take on a bracing function that simulates the effect of the proper correlation statistics. And, at the same time, introduce a false redundancy in the count of the degrees of freedom. In this case, the number of trivial baselines in an adjustment should be subtracted from the number of redundancies before the variance factor (variance of unit weight) is calculated. If this approach is not followed, trivial baselines will be excluded from the network altogether.

INCORPORATION OF GPS SURVEYS

B-18. To incorporate 3D GPS-Ss into local horizontal and vertical data (WGS-84 and MSL), the number, type, and distribution of control points to which connections should be made must be considered. A determination of which technique to use to derive orthometric heights from ellipsoidal heights is necessary. The technique will influence the choice of well-placed strategic points with known orthometric heights that should be observed. Alternatively, orthometric heights can be brought to selected points in the GPS network.

B-19. For a small area (a few kilometers across) with a smooth geoid, solving for transformation parameters brings about a de facto surface fit (tilting the ellipsoid so that it is parallel with the geoid). When a single value for the geoid-spheroid separation is used at the orthometric-control points, it is assumed that the geoid is as smooth as the ellipsoid. For larger areas, choose between a geodetic-leveling, a geopotential model-based, a gravimetric, or a geometrically derived geoid.

B-20. The classification of GPS results (including height) is generally expressed using a linear propagation method, unless requirements specifically call for height classification using differential leveling. In both cases, the class and the order are assigned separately for horizontal and vertical control.

SYSTEM TESTING

B-21. A system test is recommended to qualify equipment, techniques, and error modeling for a particular accuracy. Evidence of a test may be required after acquisition of new equipment or software, when trying new techniques, or as justification of a chosen method of error modeling. This evidence serves—

- As a justification of observing and processing techniques.
- To validate (under similar conditions) the same equipment, the software, and the observation method.
- To justify the error modeling.
- As a justification of a multiplier used to increase the baseline-vector variance-covariance matrix elements when these are unrealistic.
- To validate data when combining results from different equipment and software.

B-22. The total GPS process is comprised of the following four distinct components:

- Satellites.
- Receiver hardware.
- Field procedures.
- Software.

B-23. The following procedures describe a system test that considers all of the components of the system and are designed to evaluate the performance of multiple receivers used in a differential mode. The field practices and system test have to reflect the particular observing strategies (for example, static, rapid static, or stop and go) that are employed on a project. The equipment should be operated according to the manufacturer's specifications. The test consists of a measurement of a small test network and the ongoing analysis of production results.

Measurement of a Small Test Network

B-24. Control should be established on at least one baseline of the small test network. This control consists of a measurement of—

(n + 1) stations and (n + 1) independent baselines

where–
n = the number of receivers

B-25. The test network observed should be a polygon with station spacing not less than 50 meters and not more than 10 kilometers. The independently observed baselines should be processed, baseline by baseline, to produce differences in Cartesian coordinates in the satellite datum (ΔX, ΔY, and ΔZ) for each baseline. The summation of these differences, for any closed figure, will give a preliminary indication of the performance of the total GPS and is an initial, minimum field analysis. At the first opportunity, performance of a more rigorous approach is essential. The vectors and their associated variance-covariance matrices should be adjusted by the least-squares method to obtain a more complete and comprehensive report on the equipment test. If the results meet the manufacturer's specification, then the manufacturer's specification can be adopted by the user as the measure of the precision attainable with the system. If not, the user's measurement system must be modified to meet the manufacturer's specification or the lower precision must be accepted.

Analysis of Production Results

B-26. The measurement of a GPS-S network involves the observation of closed figures. An analysis of the closure of all figures should be carried out to ensure that each figure closes within the expected precision. Closure polygons must combine data from different sessions. A network adjustment is the most efficient way to confirm agreement with established control at the required accuracy.

OBSERVATION REQUIREMENTS

B-27. The observation duration has to be long enough to resolve ambiguities and, depending upon the required accuracy, it also has to be long enough to average out multipath effects. This is especially true for second-order and higher surveys. It is preferred to observe five or more satellites, although most techniques will work with a minimum of four satellites. The extra satellites give protection against loss of lock from one of the satellites and speeds up the ambiguity-resolution process.

B-28. Equipment users should refer to the manufacturer's specifications for DOP. DOP is an indicator of the geometrical strength of a four-or-more satellite constellation as it applies to instantaneous point-position fixing. PDOP refers to the three position coordinates (while GDOP includes a term for the clock offset). The lower the number, the better the geometry for achieving an accurate point position. Use caution in applying this parameter as an absolute acceptance or rejection criterion, particularly in relative GPS positioning where longer observation periods remove most common biases. However, sufficiently changing geometry during a recording session assists in the determination of ambiguities. Once the ambiguities are resolved, PDOP should be kept low.

B-29. The minimum satellite elevation is 15°. This requirement can be reduced to 10° for third-order and lower surveys. It is necessary to ensure that the receiver-data rates are the same or a common integer factor of 60″, which results in sufficient common data to resolve ambiguities. Give special attention when processing data collected from different types of receivers (5″, 10″, 20″, or 30″ are typical). The time intervals must also be simultaneous.

B-30. When a reflective environment (horizontal, vertical, or skew) cannot be avoided, refrain from using both low satellites and satellites within half an hour either side of culmination for that site. Occupy the position (and the others in the same session) for a minimum number of minutes that is equal to 40 divided by the perpendicular distance to the suspected reflecting surface. This will generally increase the chance of capturing at least one full swing of the interference. When third-order and higher accuracies are required and a site with a reflective environment cannot be avoided, it is worthwhile to average longer observation times of the interference (virtually the equivalent of a static survey).

B-31. Manufacturers generally give a guide for the average time required to resolve ambiguities. When these times are shorter than the minimum observation duration recommended above for reducing multipath, the observation duration should be lengthened (following the above guide) if in a reflective environment.

B-32. Field procedures are substantially the same as recommended above when using static and kinematic techniques for requirements less stringent than second order. This is because relative GPS can routinely deliver second-order accuracy. Refer to the manufacturer's manual for any additional requirements. Real-time-kinematic carrier-phase techniques already impact on the first 10 kilometers of second- and lower-order surveys. At this stage of the analysis, different criteria should be applied depending on the project requirements. A summary of the various observational techniques follow.

Static

B-33. Static surveying uses two or more receivers that remain stationary for 30 minutes or more, depending on the line length and the required accuracy. Carrier-phase observations are made, and to enhance the carrier-phase ambiguity resolution, the satellite geometry should be given time to change. Observations are made (with two or more receivers that have a common data rate) to four or more satellites with elevations above 15°. An accuracy of 0.1 to 10 ppm is possible, depending upon the quality of the data, the processing, and the length of the baseline vectors.

Rapid Static

B-34. Rapid-static surveying uses various combinations of observations (for example, C/A-, P- or Y-code range data and L1 and L2 carrier-range data). If the view of the sky is limited, rapid-static surveying depends on least-squares ambiguity estimation for a determination of the correct ambiguities. The reliability is enhanced when data from six or more satellites are used and multiple occupations are made at different sidereal times. Dual-frequency receivers are advantageous because they allow various data combinations (for example, widelaning) in estimating a solution. Occupation times of 2′ to 10′ is required to obtain centimeter-level accuracy for vector lengths up to 10 kilometers.

Stop-and-Go Kinematic

B-35. Stop-and-go-kinematic surveying involves alternately stopping and moving of one receiver, with the main interest being in the stopped positions. This technique relies upon determining baselines, with a minimum amount of data, by resolving the carrier-phase ambiguities at the beginning and maintaining lock throughout the survey.

B-36. In stop-and-go surveying, two receivers observe a predetermined baseline and perform an antenna swap. The antenna swap is used to obtain the baseline in a matter of a few minutes. The process where carrier-phase ambiguities between satellites and receivers are resolved before the other receiver starts roving is called initialization.

B-37. The second receiver then starts roving, staying stationary over points for a few seconds to a few minutes. Constant satellite lock should be maintained on at least four satellites and is the major factor with this technique, which makes it suitable for open terrain only. An accuracy of 20 to 30 millimeters is possible, and accuracies of 1 to 10 ppm have been quoted. Good geometry and the observation of a minimum of a dozen epochs at each survey point are important for this technique. The short occupation times give a rapid drop-off in height accuracy. Good planning is advantageous, and the occasional occupation of a known point is necessary in case the geometry deteriorates or a cycle slip occurs before the survey can be closed. RTK methods fit this category, because RTK presupposes access to actual phase observations at a site with known coordinates, to produce a double-difference, ambiguity-fixed solution in real time.

Kinematic

B-38. Kinematic surveying proceeds as in stop-and-go-kinematic surveying but without stopping. Vectors are created that are associated with single epochs in time.

Pseudokinematic

B-39. Pseudokinematic surveying does not depend on continuous lock of the rover(s) while traveling but requires continuous lock while stationary. The same point is reoccupied after 1 to 2 hours by the same receiver and again for about 3′ to 10′. This creates a situation of having one deliberate cycle slip dividing the data. This paired observation is defined as a single station observation. Obtaining the change in satellite geometry enhances the ambiguity resolution. A constant antenna height allows the two data sets to represent measurements to the same physical point in space.

B-40. Accuracies can reach 20 to 30 millimeters depending upon satellite availability and PDOP. Accuracies of 2 to 20 ppm have been quoted. Single- or dual-frequency carrier-phase receivers can be used. Dual-frequency observations, although not necessary, enhance the determination of the ambiguities. For practical purposes, maximum vector lengths are about 15 kilometers.

B-41. While not as productive as the stop-and-go-kinematic technique, the pseudokinematic technique does not rely on maintaining satellite lock. The pseudokinematic technique is much more practical in areas where trees, buildings, tunnels, overpasses, or other obstructions are likely to interrupt the signal or where interstation access is slow.

OTF/RTK Kinematic

B-42. OTF/RTK surveying uses a continuous kinematic technique, which is ideal when the roving receiver cannot stop for an initialization. OTF/RTK does not need initialization; it performs auto-reverse processing as soon as the ambiguities are resolved. Contrary to the definition of kinematic techniques, OTF/RTK does not need initialization at the start. A sufficient number of dual-frequency observations to, preferably, five satellites with good PDOP are required. After the dual-frequency observations, only four satellites are required. Vectors are created that are associated with single epochs in time. For distances up to 20 kilometers, a conventional static or rapid-static setup is required as initialization. Single-frequency techniques are also used with OTF/RTK.

DGPS

B-43. The term differential is generally used with pseudorange techniques that resolve the errors in a single position. One of these techniques is real-time DGPS, which resolves the errors in real time. This is in contrast to the vector approach of relative GPS, which is achieved by observing C/A-code-phase (pseudorange) error measurements at one or more known stations and then transmitting the data to the remote station(s).

B-44. *Table B-8* shows procedures for static- and kinematic-GPS techniques. Occupation time at a point is equipment and distance dependent and is sometimes indicated by the receiver. The longer the occupation time the greater the chance that ambiguities are resolved and that instrument noise and multipath interference is averaged out, which gives more reliability.

Table B-8. Static and Kinematic GPS

Technique		Procedure					
		Initiali-zation	Dual/ Single Frequency	Common Satellites	Continuous Lock During Travel	Maximum Spacing	PDOP[5]
Static GPS	Static	No	Optional	≥4	No	500 km	Note 5
	Pseudo-kinematic	No	Optional	≥4[1]	No, only at base	<20 km	Note 5
	Rapid static	No	Optional[4]	≥4	No	<10 km	Note 5
Kinematic GPS	Kinematic	Yes[2]	Optional[3]	5 preferred, 4 possible	Yes	<20 km	<10
	Stop-and-go	Yes	Single	5 preferred, 4 possible	Yes	<20 km	<10
	OTF/RTK	No	Dual or single	5 preferred, 4 possible	Preferred, but not necessary	<20 km, 7-10 km best	NA

[1]Four satellites are required in both observation sessions; five or more satellites are an advantage.

[2]Observe a known baseline (at beginning or end) and solve all ambiguities, do an antenna swap, or return to the starting point at the end of the survey.

[3]Dual-frequency receivers give an advantage.

[4]Dual-frequency P-code will enhance the speed of the solution.

[5]Sufficiently changing geometry during a recording session assists in the determination of ambiguities, and once they are resolved, PDOP should be kept low. In the kinematic techniques, the ambiguities are already resolved through the initialization and the PDOP should be kept low from that moment (refer to the manufacturer's specifications).

REDUCTION AND ANALYSIS PROCEDURES

B-45. The quality of the results of a GPS-S is determined by both the method of observation (including choice of equipment) and the quality of the reduction, adjustment, and transformation procedures. The initial station position of the datum for any baseline calculation should not exceed 10 meters for each ppm accuracy required and is best obtained by transformation or by connection to another point with known coordinates in the satellite datum.

B-46. The reduction procedures outlined in *Table B-9* give a broad overview of the essential components to consider when undertaking the reduction of GPS data. Adhering to the procedures in this table does not remove the necessity for statistical analysis of the results. The table format gives a clear picture of the specific reduction requirements for achieving a given geometric standard of survey. These reduction procedures indicate the minimal requirements.

Table B-9. Recommended Processing Requirements

Observation Distance	Order and Class				
	1st	2nd, I	2nd, II	3rd, I	3rd, II
<8 km	D[1], DD, FX	D[1], DD, FX	S, DD, FX	S, DD, FX	S, DD, FX
8 to 24 km	D, DD, FX	D, DD, FX	D, DD, FX	D, DD, FX	S, DD, FX
25 to 49 km	D, DD, FX-FT	D, DD, FX-FT	D, DD, FX-FT	D, DD, FX-FT	D, DD, FX-FT
50 to 90 km	D, DD,FT	DD or T[2], D, FT	DD or T[2], D, FT	DD or T[2], D, FT	DD or T[2], D, FT
90> km	D, T	D, T	D, T	D, T	D, T

[1]Use L1 solutions from a dual-frequency receiver to enable ambiguity resolution by widelaning.

[2]Double-difference solutions are preferred. Triple-difference solutions are increasingly acceptable as the distance increases, and the observation length allows sufficient geometry change.

LEGEND:
D = dual-frequency receiver
DD = double-difference solution
FT = ambiguity-float solution (with repaired cycle slips)
FX = ambiguity-fixed solution
S = single-frequency receiver
T = triple-difference solution
(with sufficient observation length to allow for a change of geometry)

B-47. Because of the effect of the ionosphere, dual-frequency receivers are used on lines over a certain length. L1-only solutions often show less noise for vector lengths below 10 kilometers. Single-frequency receivers can still satisfy high-order survey requirements up to 20 kilometers but need an increasing number of hours of observation if a higher order of survey is required or if longer baselines are observed. Dual-frequency ambiguity-fixed L1/L2 solutions in their ion-free linear combination are usually obtained for vector lengths from 10 to 50 kilometers. An ambiguity-fixed solution is preferred, but as the distance increases, it becomes harder to achieve. Ion-free, ambiguity-float L1/L2 solutions have become more common for vectors of 40 to 90 kilometers. For longer baselines, triple-difference solutions can be used if the observation time is long enough to enable a sufficient change in the satellite

geometry during the recording session. As a guide, use 30 minutes as a minimum plus an additional 20 minutes per each 10 kilometers of baseline length.

PROCESSING AND ANALYSIS OF MINIMALLY CONSTRAINED ADJUSTMENTS

B-48. When processing minimally constrained adjustments, the processing software must be able to produce the variance/covariance statistics of the observed Cartesian vectors so that the adjustments can be input into a 3D adjustment program. A least-squares adjustment must be performed when deriving values for control surveys. The software must be capable of determining transformation parameters between the observed Cartesian vectors and the local geodetic system.

B-49. Error ellipses should be calculated after a minimally constrained least-squares adjustment. These calculations prove the quality of the network design rather than the quality of the observations. The error ellipses should be scaled by the a priori variance of unit weight (generally equal to one), unless the a posteriori estimate of variance does not pass the chi-square test. In the latter case, the observations, the statistical model, or even the mathematical model should be examined and the problem remedied and the adjustment rerun. In the case of not being able to remedy the situation, the error ellipses should be scaled by the a posteriori variance factor.

B-50. To confirm the quality of the observations, the standardized residuals should be checked for outliers. The checking of the statistics often involves critical evaluation of the a priori standard deviations of the observations. If the baseline variance/covariance matrix is routinely modified by a multiplier, documentation of a measurement over a test network may be required as confirmation of the multiplier used.

B-51. To conform to the internal consistency requirements for a particular geometric accuracy, the error ellipses should confirm the capability of the network design to meet the specifications. The standardized residuals and the estimate of variance should confirm that the observations have actually met the required standard.

B-52. All points in a survey should conform to the specifications belonging to the relevant classification. This applies whether the points are connected by baseline observations or not. This is also valid when relative accuracy values are calculated to points with previously established coordinate values. Geoid-separation values are applied to orthometric heights of points that will be constrained in the transformation and adjustment.

DERIVATION OF GEOID-SEPARATION VALUES

B-53. The following four methods are used for determining geoid heights:

- **Geodetic-leveling-geoid method.** The use of a geodetic-leveling geoid.
- **Global-geopotential-model method.** The use of different types of global-geopotential models derived from gravity and active or passive satellite information.

- **Gravimetric method.** The use of an intensive grid of local gravity, together with a high-degree global-geopotential model.
- **Geometrically modeled geoid method.** The use of a geometrically modeled geoid by contouring geoid-height values derived from orthometric and ellipsoidal heights.

B-54. The relative accuracy of height values resulting from the global-geopotential-model method are dependent on the grid spacing of the geopotential model used. The spacing of points with observed local gravity in the gravimetric method and the spacing of leveled points in the geometrically modeled geoid method determine the relative accuracy.

B-55. The geodetic-leveling-geoid method is generally not accurate enough to convert GPS-ellipsoidal heights into orthometric heights but works well with height differences. The global-geopotential-model method is useful in the case of long baselines in an area with a smooth geoid and scarce orthometric-height points. The gravimetric method is the most accurate when a sufficient dense grid of gravity information is available. The geometrically modeled geoid method is the most accurate when sufficient orthometric information is available. When orthometric information is scarce and the geoid is not smooth, surface fitting and contouring are not recommended for short distances (10 kilometers or less).

TRANSFORMATION AND CONSTRAINED ADJUSTMENTS

B-56. The next step is the derivation of transformation parameters between the minimally constrained adjusted vectors and the selected constrained points in the local geodetic system. This is usually carried out together with a constrained least-squares adjustment. This adjustment is subjected to the same analysis as the minimally constrained adjustment. Error ellipses are calculated again and the network is allocated an accuracy order that enables its orderly integration with the database that contains the existing data set of established coordinates.

NOTE: Refer to EM 1110-1-1003 for a complete sample of an adjustment statistics summary.

Appendix C

Basic Survey Computations

This appendix contains recommended procedures for performing basic survey computations. Until recently, three different forms were used to compute a two-point intersection. Army units have developed a one-sheet format *(Figure C-1, page C-2)* to use when computing a two-point intersection. This one-sheet format is broken down into three parts and combines portions of DA Forms 1920, 1938, and 1947. Part I is from DA Form 1920, Part II is from DA Form 1938, and Part III is from DA Form 1947.

COMPUTATION OF A TWO-POINT INTERSECTION

C-1. Tabulate data (known and field) for a two-point intersection on DA Form 1962 *(Figure C-2, page C-3)* or on a blank piece of paper with an identifying heading. Include the following information:

- A properly oriented sketch of the triangle with the known baseline stations, an unknown station, and any other information that may be needed to organize computations. Label the unknown point as number 1 and the known points (clockwise from the unknown point) as number 2 and number 3.
- The position and elevation of known stations.
- The grid azimuth and grid distance of the known baseline.
- The observed horizontal angles, ZDs, and HIs.

NOTE: The grid azimuth (denoted by t) and the grid distance may be computed on DA Form 1934 by using UTM coordinates. If needed, conversions can be computed on DA Forms 1932 and 1933.

COMPLETE PART I OF THE ONE-SHEET FORMAT

C-2. Perform the following steps to complete Part I *(Figure C-1)*:

Step 1. Abstract all pertinent information from DA Form 1962 onto Part I. Include the following information:

- Record the—
  - Project name.
  - Project location.
  - Organization performing the survey.
  - Date of computation.
- Record the station names (under the station column) opposite their respective numbers. Station 1 (unknown station) and Stations 2 and 3 (known stations).

24 PROJECT Example	TWO-POINT INTERSECTION (OBSTRUCTION COMPUTATION)	
LOCATION Fort Wainwright, Alaska	ORGANIZATION DMS/BGS	DATE Today's date

STATION	OBSERVED ANGLE	SINE	DISTANCE		SIDE
1 ANT 1	37°17′26.6″	+0.605859583	2934.878	2-3	BHTW-CTWR
2 BHTW	82°07′00.9″	+0.990550001	4798.378	1-3	ANT 1-CTWR
3 CTWR	60°35′32.5″	+0.871148354	4219.978	1-2	ANT 1-BHTW
		D=Ratio, side/sine	4844.155448		

Part I, DA Form 1920

			t2to3	156°34′32.0″					t3to2	336°34′32.0″	
			+∠2	82°07′00.9″					-∠3	60°35′32.5″	
Sint(2to1)	-0.854390566		t2to1	238°41′32.9″		Sint(3to1)	-0.994552512		t3to1	275°58′59.5″	
Cost(2to1)	-0.519631370		∠1			Cost(3to1)	+0.104236753				
N_2	7193431.450	2	BHTW	E_2	469533.340	N_3	7190738.450	3	CTWR	E_3	470700.070
ΔN	-2192.833	S	4219978	ΔE	-3605.509	ΔN	+500.167	S	4798378	ΔE	-4772.239
N_1	7191238.617	1	ANT1	E_1	465927.831	N_1	7191238.617	1	ANT1	E_1	465927.831

Part II, DA Form 1938

Station 1, occ	BHTW		CTWR	t2to1=(t2to3+∠2)
Station 2, obs	ANT1		ANT1	t3to1=(t3to2-∠3)
Object sighted	Top of Ant		Top of Ant	
ζ_1	92°06′00.5″		89°35′16.2″	
α and mean φ	238°42′/64°51′		275°59′/64°51′	
(0.5 - m)	0.4290		0.4290	
s	4219.978		4798.378	
ρ sin 1″	30.997		31.007	
κ in secs	58.4″		66.4″	
$(90°-\zeta_1+\kappa)$	-02°05′.02.1″		+00°25′50.2″	
$\tan(90°-\zeta_1+\kappa)$	-0.036387254		+0.007515723	
h_2-h_1	-153.553		+36.063	
h_1	345.786		156.208	
HI	1.699		1.421	
Corrected elevation	193.932		193.692	

Sample

$h_2-h_1 = s \bullet \tan(90°-\zeta_1+\kappa)$ $\qquad$ $\kappa \text{ in secs} = \dfrac{(0.5-m)s}{\rho \sin 1''}$

Part III, DA Form 1947

COMPUTED BY	DATE	CHECKED BY	DATE
SSG BAKER	01 SEP 98		

Figure C-1. Sample One-Sheet Format for Basic Survey Computations

For use of this form, see FM 3-34.331; the proponent agency is TRADOC.

PROJECT			TABULATION OF GEODETIC DATA	
Example				
LOCATION			ORGANIZATION	
Fort Wainwright, Alaska			DMS	
STATION	Ellipsoid: WGS 84		Mean Latitude: 64°51'	
	Grid Zone: 06	CM: -147°		

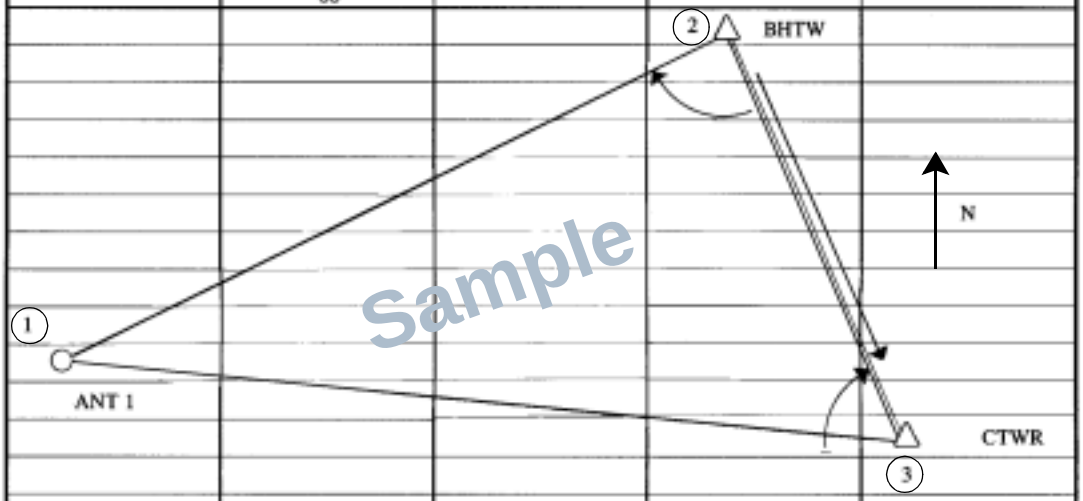

Sample

BHTW N	7,193,431.450		CTWR N	7,190,738.450
E	469,533.340		E	470,700.070
Elevation	345.786 m		Elevation	156.208 m
az BHTW-CTWR				
156°34'32.0"				
Observed	Horizontal Angle	ZD to ANT 1	HI	
BHTW	82°07'00.9"	92°06'00.5"	1.699 m	
CTWR	60°35'32.5"	89°35'16.2"	1.421 m	
	Grid Distance			
BHTW-CTWR	2,934.878 m			
	rho			
BHTW-ANT 1	6,393,528.9226			
CTWR-ANT 1	6,395,632.8150			

TABULATED BY	DATE	CHECKED BY	DATE
SSG Baker	08 July 98	SFC Whitworth	08 July 98

DA FORM 1962, FEB 57 USAPPC V1.00

Figure C-2. Sample DA Form 1962

- Record the observed horizontal angles opposite their respective numbers under the observed-angle column.
- Record the distance of the given side (side 2-3) that serves as the baseline under the distance column.
- Record the station names that correspond to each side under the side column.

Step 2. Complete the following items in Part I:

- Compute the unknown angle (number 1) by subtracting the two observed angles from 180°.
- Compute the sine of angle number 1 and record to nine decimal places with the sign (round the answer).
- Compute the side/sine ratio (denoted by D) by dividing the distance of the given side (side 2-3) by the sine of angle number 1 and record to six decimal places (round the answer).
- Compute the sine of angle number 2 and record to nine decimal places with the sign (round the answer).
- Compute side 1-3 by multiplying the sine of angle number 2 by D and record to three decimal places (round the answer).
- Compute the sine of angle number 3 and record to nine decimal places with the sign (round the answer).
- Compute side 1-2 by multiplying the sine of angle number 3 by D and record to three decimal places (round the answer).

COMPLETE PART II OF THE ONE-SHEET FORMAT

C-3. Perform the following steps to complete Part II *(Figure C-1, page C-2):*

Step 1. Abstract all necessary information from DA Forms 1962 and Part I onto Part II. Record the–

- Project name.
- Project location.
- Organization performing the survey.
- Ellipsoid name.
- Zone number.
- Meridian designation.
- t (2 to 3).
- t (3 to 2).
- Angle at Station 2 (∠ 2).
- Angle at Station 3 (∠ 3).
- Northing and easting of Station 2 (N_2 and E_2).
- Northing and easting of Station 3 (N_3 and E_3).
- Station names opposite their appropriate numbers (for example, 2 ABE, 1 Pole, or 3 CAT).
- Grid distance of side 1-2 (from Part I).
- Grid distance of side 1-3 (from Part I).

Step 2. Complete the following items:

- Compute t (2 to 1) by adding ∠ 2 to t (2 to 3). If the sum exceeds 360°, subtract 360°.
- Compute the sine of t (2 to 1). Record to nine decimal places with the sign (round the answer).
- Compute the dE by multiplying the sine of t (2 to 1) by the grid distance of side 2-1. Record to three decimal places with the sign (round the answer).
- Compute E_1 by algebraically adding dE and E_2. Record to three decimal places.
- Compute the cosine of t (2 to 1). Record to nine decimal places with the sign (round the answer).
- Compute the dN by multiplying the cosine of t (2 to 1) by the grid distance of side 2-1. Record to three decimal places with the sign (round the answer).
- Compute N_1 by algebraically adding dN and N_2. Record to three decimal places.
- Compute t (3 to 1) by subtracting the ∠ 3 from t (3 to 2). If ∠ 3 is larger than t (3 to 2), add 360° before subtracting.
- Compute the sine of t (3 to 1). Record to nine decimal places with the sign (round the answer).
- Compute dE by multiplying the sine of t (3 to 1) by the grid distance of side 3-1. Record to three decimal places with the sign (round the answer).
- Compute E_1 by algebraically adding dE and E_3. Record to three decimal places.
- Compute the cosine of t (3 to 1). Record to nine decimal places with the sign (round the answer).
- Compute dN by multiplying the cosine of t (3 to 1) by the grid distance of side 3-1. Record to three decimal places with the sign (round the answer).
- Compute N_1 by algebraically adding dN and N_3. Record to three decimal places.

NOTE: Compare the two sets of N_1 and E_1. They must agree to within 0.001. If they do not, then a math or abstraction error was made, and Part II must be recomputed.

COMPLETE PART III OF THE ONE-SHEET FORMAT

C-4. Perform the following steps to complete Part III *(Figure C-1, page C-2):*

Step 1. Abstract all information from DA Forms 1962 and Part II onto Part III. Record the–

- Project name.
- Project location.
- Organization performing the survey.
- Date of computation.
- Name of the station whose elevation is known (Station 1, occupied).

- Name of the station whose elevation is unknown (Station 2, observed).
- Object sighted (for example, target or obstruction light).
- Mean observed ZD (denoted by ζ_1).
- Mean latitude (denoted by ϕ) and the azimuth of a line (denoted by α).

NOTE: The azimuth of a line is recorded to the nearest minute and is obtained from Part II. The mean latitude is obtained by converting the northings and eastings computed on Part II to geographic positions and then taking the mean of the latitudes.

- Weighted mean coefficient of refraction *(0.5 - m)*. When this is not observed, use 0.4290.
- Grid distance (denoted by s) (from Part II).
- Elevation of the occupied station (denoted by h_1) (from DA Form 1962).
- HI of the station occupied (from DA Form 1962).

Step 2. Compute the elevation by using the following formulas:

- Compute rho (denoted by ρ) sine 1″. Record to three decimal places (round the answer). ρ is the mean radius of curvature in the plane of the distance and will be given (it can be found on DA Form 1962).

$$\rho = \frac{RN}{R\sin^2\alpha + N\cos^2\alpha}$$

where–

R = radius of curvature in the plane of the meridian (obtained from NIMA's table generating software)

N = radius of curvature in the plane of the prime vertical (obtained from NIMA's table generating software)

- Compute the correction for the earth's curvature (denoted by κ) in seconds (denoted by secs). Record to one decimal place (round the answer).

$$\kappa(\text{in secs}) = \frac{(0.5 - m)s}{\rho \sin 1''}$$

where—

m = mean coefficient of refraction

- Compute $(90° - \zeta_1 + \kappa)$. Record to one decimal place (00.1″) with the sign (κ must be converted to minutes and seconds if it is over 60″).
- Compute the tangent of $(90° - \zeta_1 + \kappa)$. Record to nine decimal places with the sign (round the answer).
- Compute $h_2 - h_1$. Record to three decimal places with the sign (round the answer).

$$h_2 - h_1 = s \bullet \tan(90° - \zeta_1 + \kappa)$$

- Compute the corrected elevation by algebraically adding (h_2 - h_1), h_1, and HI.
- Repeat Part III, steps 1 and 2, for observations taken from the other end of the baseline.
- Sign and date the form.

NOTE: Compute the DE between the two computed elevations. Use the following formula to determine the AE:

$$AE = 0.5\ m \bullet \sqrt{\text{distance to point in km}}$$

Use the shortest of the two distances to the unknown point. If the DE is larger than the AE, check for math and abstraction errors. If none are found, the intersection does not meet specifications and needs to be reobserved.

COMPUTATION OF A GRID TRAVERSE AND SIDE SHOTS

C-5. DA Form 1940 is used to compute a grid traverse. Tabulate known and field data for the traverse on a DA Form 1962 *(Figure C-3, page C-8)* or on a blank piece of notepaper with an identifying heading. Include the following:

- A sketch of the traverse. Include the starting and ending stations, the intermediate stations, and any other information that may be needed to organize the computations.
- The position, the elevation, and the azimuth (if known) for the starting and ending stations.
- The observed angles and distances.

C-6. *Figure C-4, page C-9,* shows a completed DA Form 1940. This figure is further broken down into separate figures to demonstrate the computation process. Refer to *Figures C-5 and C-6, page C-10,* when working step 1 and *Figure C-7, page C-11,* when working steps 2 through 7.

Step 1. Transfer the information from DA Form 1962 to DA Form 1940. Record the following information:

- Project name.
- Project location.
- Organization performing the survey.
- From station (starting station).
- To station (ending station).
- Number of angle stations (number of observed field angles).
- Grid zone.
- Traverse station names (the first and last columns of DA Form 1940).
- Observed angles (corrected mean station angles).
- Corrected field distances.
- Starting and ending projected geodetic azimuths (denoted by T).
- Mean elevation.
- Starting and ending UTM grid coordinates.

For use of this form, see FM 3-34.331 the proponent agency is TRADOC.

PROJECT			TABULATION OF GEODETIC DATA	
Example 1				
LOCATION			ORGANIZATION	
Fort Belvoir, Virginia			DMS	
STATION	Third-Order, Class I Traverse		TILDON to ABBOT	
	Grid Zone: 18S			
	ABBOT			
MARINE	to ABBOT	AZ MARK		
			N	
ARMY				
Mean elevation of	traverse = 73 m			
			AIR FORCE	
TILDON N	4,283,839.177			to JOBIE
E	314,225.155			
			TILDON	
JOBIE N	4,284,279.027			
E	315,123.186		ABBOT N	4,287,595.893
			E	310,461.502
az (T) TILDON to	JOBIE			
63°54'20.3"			ABBOT AZ N	4,286,241.633
			E	311,106.466
Field	Angles		az (T) ABBOT to	ABBOT AZ MARK
TILDON	263°24'13.6"		154°32'02.9"	
AIR FORCE	149°47'12.2'			
ARMY	281°21'15.3"		Geodetic	Distance (m)
MARINE	152°22'39.3"		TILD0N-AIR F0RCE	1,613.478
ABBOT	323°42'12.5"		AIR F0RCE-ARMY	3,777.908
			ARMY-MARINE	724.196
		(horizontal tape)	MARINE-ABB0T	112.372
TABULATED BY Gy Sgt Cook	DATE 14 August 80	CHECKED BY SFC Edwards		DATE 14 August 80

DA FORM 1962, FEB 57

USAPPC V1.00

Sample

Figure C-3. Observed Angles and Distances on DA Form 1962

TRAVERSE COMPUTATION ON THE UNIVERSAL TRANSVERSE MERCATOR GRID
(FM 3-34.331)

PROJECT	SAMPLE
LOCATION	ANYWHERE
ORGANIZATION	SURVEY
TOTAL ANGULAR CLOSURE	−9.7"
NR OF ANGLE STATIONS	5
ANGULAR CLOSURE PER STATION	3@ 1.9" 2@ 2.0"
FROM STATION	TILDON
TO STATION	ABBOT
BOOK NUMBER	
LINEAR CLOSURE	0.4329
LENGTH OF TRAVERSE	6228.170
LINEAR CLOSURE RATIO	1:14,300
TRAVERSE NUMBER	
ZONE	183
UNIT	METERS
PAGE NR	1
NR OF PAGES	1

Station	Observed Angle	Adjusted Angle
JOBIE		
TILDON	263°24'13.6"	263°24'15.5"
AIR FORCE	149°47'12.2"	149°47'14.1"
ARMY	281°21'15.3"	281°21'17.3"
MARINE	152°22'39.3"	152°22'41.2"
ABBOT	323°42'12.5"	323°42'14.5"
ABBOT AM.		
	+	
	1.9"	
	1.9"	
	2.0"	
	1.9"	
	2.0"	
	Σ +9.7"	
Σ of ∠s	1234.531444	
COMP	154°31'53.2"	
FIXED	154°32'02.9"	
AEC	−09.7"	
3RD	CLASS I	
AE = ±	10"√4 = ±20"	
CORR	STA. −9.7"/5	= 1.94"
3@ 1.9"	2@ 2.0"	

Azimuths	Corrected Field Distances	Scale Factor X Sea Level Coefficient	Grid Distances	Cosine	Sine	Unadjusted ΔN		Unadjusted ΔE		Adjusted Grid Coordinates N	Adjusted Grid Coordinates E	Stations
GK AZ							+		−			JOBBIE
63°54'20.3"										4,283,839.177	314,225.115	TILDON
327°18'35.8"	1613.478	1.000035	1613.534	+0.846045	−0.5400943	+1357957	0.024	−871.461	0.074	4,285,197.218	313,353.580	AIR FORCE
297°05'49.9"	3777.908	1.000035	3778.040	+0.4555013	−0.8902331	+1720.902	0.177	−3363.344	0.174	4,286,918.317	309,990.062	ARMY
38°27'07.2"	724.196	1.000035	724.221	+0.7831294	+0.6218586	+567159	0.038	+450.363	0.033	4,287,485.514	310,440.392	MARINE
10°49'48.4"	112.372*	1.000024	112.375	+0.9821886	+0.1878975	+110.373	0.006	+21.115	0.005	4,287,595.893	310,461.502	ABBOT
154°32'02.9"		Σ	6228.170			Σ +0.325		Σ −0.286				ABBOT A.
					COMP	+3756.391		−3763.327				
					FIXED	+3756.716		−3763.613				
MN ELEV.	73 m				ERROR	−0.325		+0.286				
SLC = 1 − 73/6,372,000												
= 0.999989					LEC =	$\sqrt{(E_n)^2+(E_e)^2}$		= 0.4329				
MID N =	4,286,000											
MID E =	312,000				R =	LENGHT TRAV / LEC		= 1:14,300				
K =	$K_0[1+(XVIII)q^2+0.000030^4]$											
K_0 =	0.9996				AE =	$04_m\sqrt{K^7}$		= 0.9982				
(XVIII) =	0.012318											
E' =	188,000				KN =	E_n / LENGHT TRAV		= 0.0000522				
q =	0.188000											
q^2 =	0.035344				KE =	E_e / LENGHT TRAV		= 0.0000459				
q^4 =	0.001249											
K =	1.000035											
K* =	1.000024											

COMPUTED BY | DATE | CHECKED BY | DATE

DA FORM 1940

Sample

Figure C-4. Sample Completed DA Form 1940

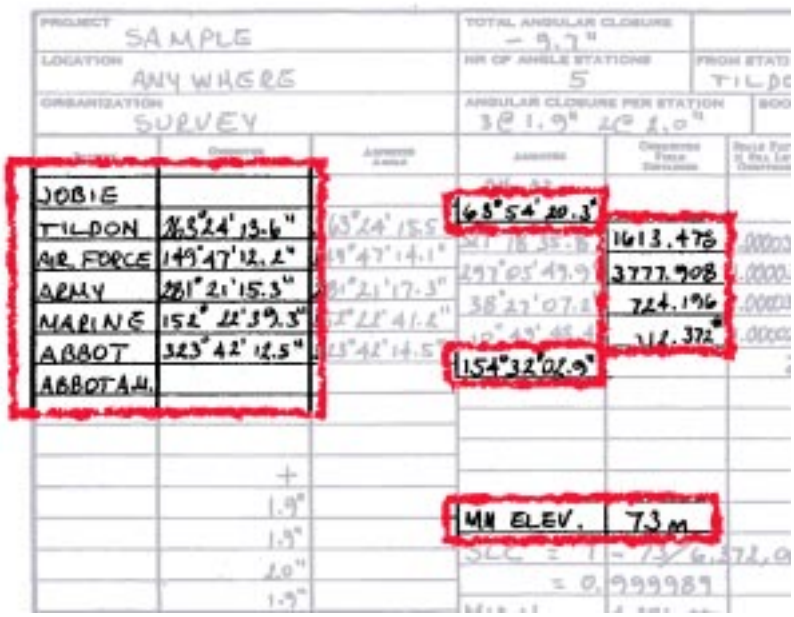

Figure C-5. Example 1 (Portion of DA Form 1940)

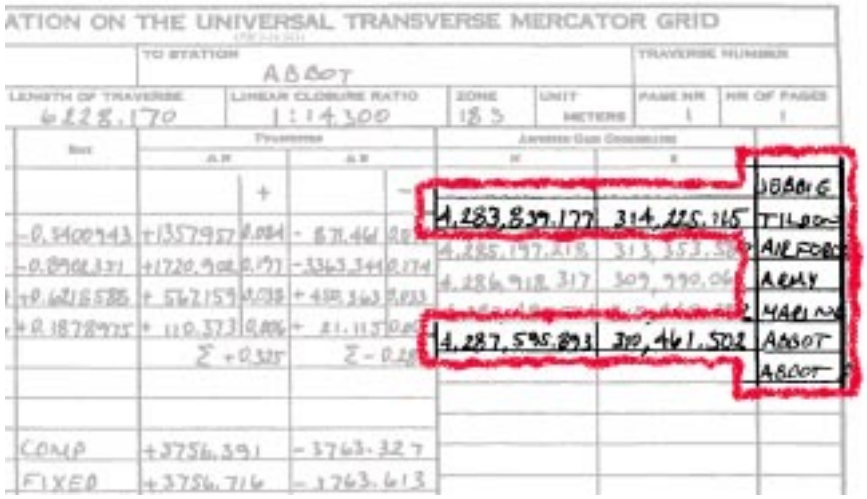

Figure C-6. Example 2 (Portion of DA Form 1940)

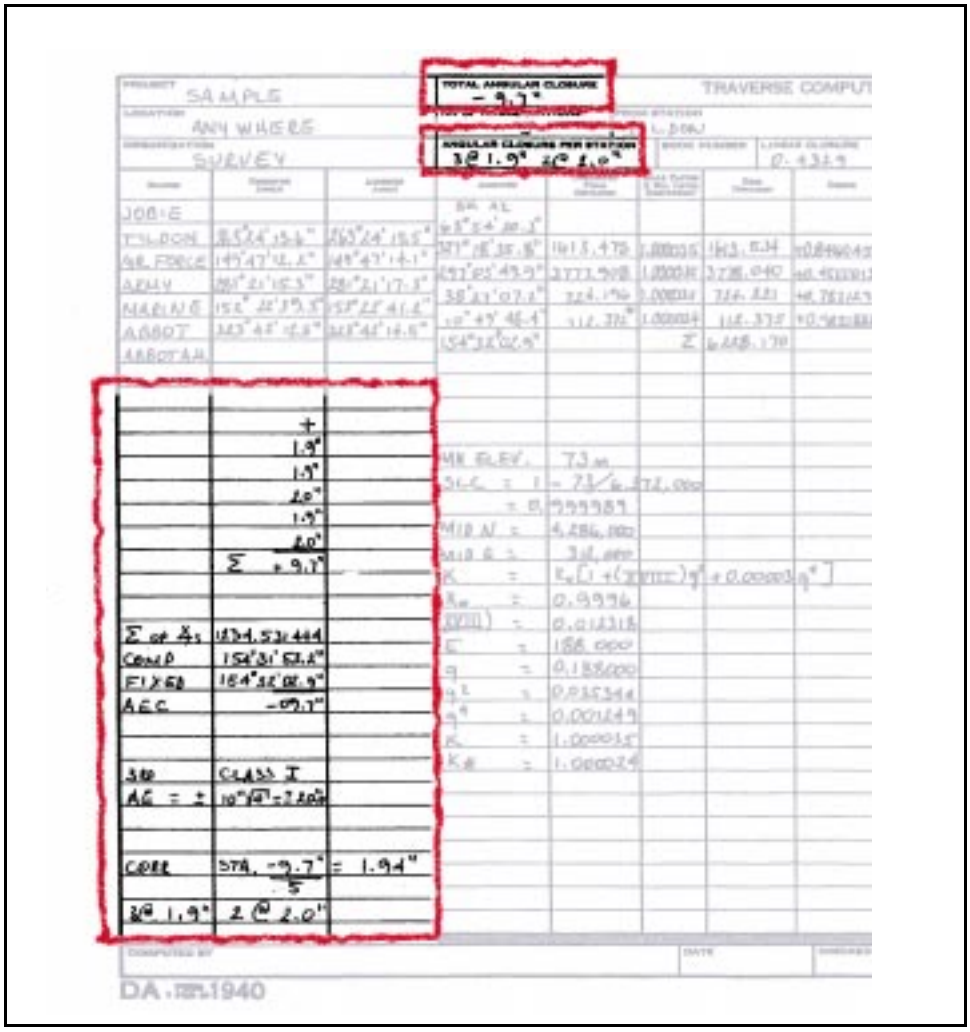

Figure C-7. Example 3 (Portion of DA Form 1940)

NOTE: The starting and ending T may be obtained from UTM coordinates by computing t and (t - T) on DA Form 1934.

Step 2. Compute the summation of angles (∑ ∠s) by adding all of the observed angles to the starting back azimuth. Leave the sum in decimal degrees. Record on DA Form 1940 to six decimal places (round the answer).

Step 3. Compute the ending azimuth by subtracting 180º from the ∑ ∠s until it is as close as possible to the known ending azimuth. Record on DA Form 1940 in degrees, minutes, and seconds. Record seconds to one decimal place (round the answers).

Step 4. Compute the AEC by subtracting the fixed (known) ending azimuth from the computed ending azimuth. Compute to one decimal place with the sign. Record in the "Total Angular Closure" block on DA Form 1940.

NOTE: The AEC is always equal to the computed values minus the fixed values as shown in the following formula:

Computed ending azimuth	**=**	***154°31′53.2″***
Fixed ending azimuth	**=**	***- 154°32′02.9″***
AEC	**=**	***-9.7″***

Step 5. Compute the allowable AEC by using the formula from DMS Special Text (ST) 031. Since this is a third-order, Class I traverse, the formula used for computing the AE is $\pm 10'' \sqrt{N}$, where N is the number of segments or distances. This traverse has four distances; therefore $AE = \pm 10'' \sqrt{4} = \pm 20.0''$.

NOTE: The AE is always truncated. Do not round up the AE, because rounding will allow more error. Record to one decimal place.

Step 6. Compute the correction per station by dividing the AEC by the number of observed angles, then change the sign of the answer. Record to two decimal places with the sign, and truncate the answer.

$$\text{Correction per station} = \frac{-AEC}{\text{number of observed angles}} = \frac{-09.7''}{5} = -(-1.94'') = +1.94''$$

NOTE: No one angle contains more of the error than another since the angular error is accidental. The error must be distributed evenly among the station angles.

Step 7. Compute the correction per observed angle and properly assign corrections to be applied to the observed angles. Record to one decimal place with the sign. After computing the correction per station, if the division does not result evenly to 0.1″, produce a group of corrections that are within 0.1″ of each other as in the following example.

+1.94″		+2.0″			
+1.94″		+2.0″		2 @	+2.0″ = +4.0″
+1.94″	or	+1.9″	or		
+1.94″		+1.9″			
+1.94″		+1.9″		3 @	+1.9″ = +5.7″
+9.7″		+9.7″			9.7″ total correction

C-7. After computing the correction per angle, assign the proper correction to each angle. For uniformity, apply the larger corrections to the larger angles. Record the correction per station in the “Angular Closure Per Station” block on DA Form 1940 (for example, 2 @ +2.0″ and 3 @ +1.9″). Sum the corrections. Record in the appropriate block on DA Form 1940.

NOTE: The sum of the corrections must equal the AEC, with the opposite sign. For example, if the AEC is negative, the corrections will be positive. If the AEC is positive, the corrections will be negative.

C-8. Refer to *Figure C-8* for working steps 1 through 4.

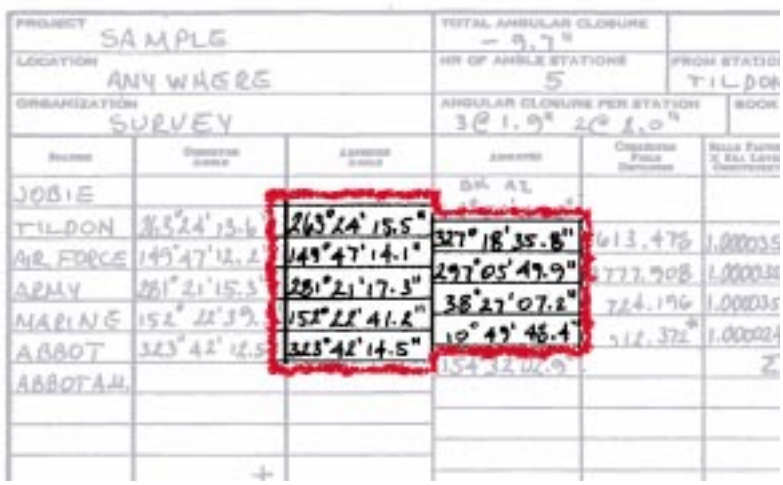

Figure C-8. Example 4 (Portion of DA Form 1940)

Step 1. Compute the adjusted angles by algebraically adding the correction per angle to the observed angle. Record to one decimal place.

Step 2. Compute the azimuth of each traverse section by adding the first adjusted angle to the starting back azimuth. If the azimuth is over 360º, subtract 360º. This is the azimuth to the forward station. The azimuth of all lines must always be stated in the direction that the traverse is being computed.

Starting back azimuth	=	63º54′20.3″
Adjusted angle at TILDON	=	263º24′15.5″
Forward azimuth: TILDON to AIR FORCE	=	327º18′35.8″

Step 3. Convert the forward azimuth of the line to a back azimuth by either adding or subtracting 180º from the forward azimuth. The forward azimuth to the next station is then computed by adding the back azimuth from the previous line to the adjusted angle of the next station. If the new forward azimuth to the station is greater than 360º, subtract 360º.

Forward azimuth: TILDON to AIR FORCE	=	327º18′35.8″
		- 180º00′00.0″
Back azimuth: TILDON to AIR FORCE	=	147º18′35.8″
Adjusted angle at AIR FORCE	=	+ 149º47′14.1″
Forward azimuth: AIR FORCE to ARMY	=	297º05′49.9”

Step 4. Repeat this procedure until the final station obtains a perfect check. The computed closing azimuth must agree exactly with the known closing azimuth. If not, a math error has been made and must be corrected.

NOTE: It is very important that particular attention be given to the direction of the azimuth. An error of 180º may go undetected, and two errors of 180º will cancel out (providing a final azimuth check). This will result in some sections being reversed in direction. Always refer to the sketch provided with the surveyor's field notes.

C-9. Refer to *Figure C-9* when working steps 1 through 10.

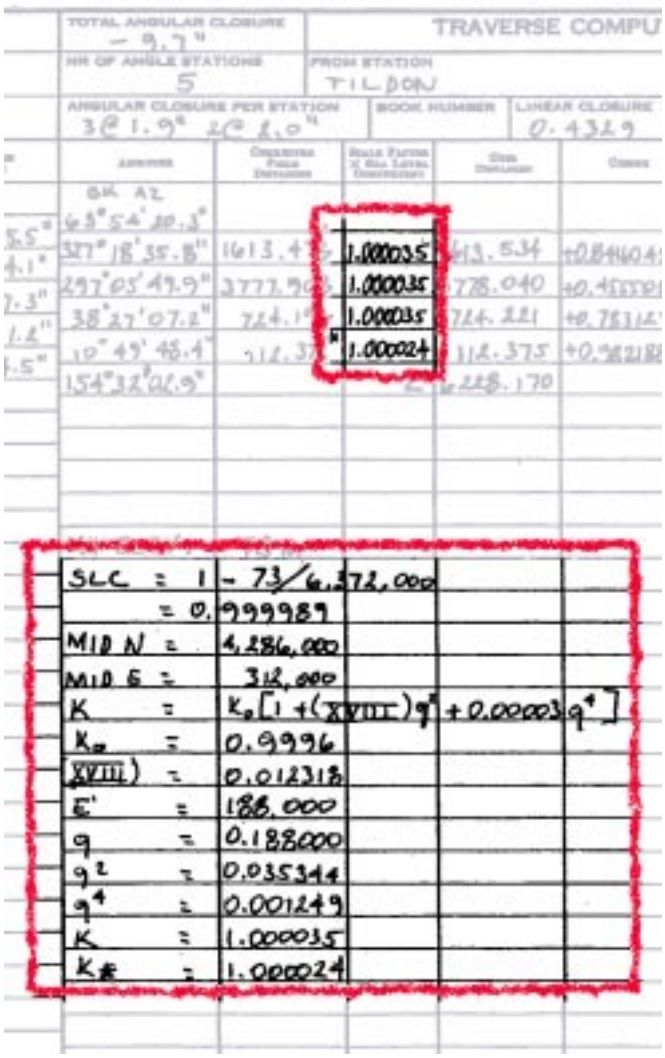

Figure C-9. Example 5 (Portion of DA Form 1940)

Step 1. Compute the SLC. Record to six decimal places.

$$SLC = 1 - \frac{h}{R} = 1 - \frac{73}{6{,}372{,}000} = 0.999989$$

where–

h = the mean elevation

R = the mean radius of the earth (If h is in feet, use R = 20,906,000 feet. If h is in meters, use R = 6,372,000 meters.)

Step 2. Compute the middle northing (denoted by MID N) and the middle easting (denoted by MID E). To compute the MID N, add the northing of the beginning traverse station to the northing of the ending traverse station. Then divide by two. Record to the nearest 1,000 meters. To compute the MID E, add the easting of the beginning traverse station to the easting of the ending traverse station. Then divide by two. Record to the nearest 1,000 meters.

Northing for TILDON =	*4,283,839.177 m*	*Easting for TILDON =*	*314,225.115 m*
Northing for ABBOT =	*+ 4,287,595.893 m*	*Easting for ABBOT =*	*+ 310,461.502 m*
	$\frac{8{,}571{,}435.070}{2}$ *m*		$\frac{624{,}686.617}{2}$ *m*
=	*4,285,717.535 m*	=	*312,343.3085 m*
MID N =	*4,286,000 m*	*MID E =*	*312,000 m*

NOTE: A scale factor (denoted by K) is required to convert a measured distance to a grid distance. A mean K may be computed for the entire traverse or for each section in the traverse. For this example, a single K will be used since the traverse's total length is 8,000 meters or less. Traverses over 8,000 meters require a K to be computed for each section. Compute the northing and easting of the midpoint for the desired traverse or section to the nearest 1,000 meters. Record the formula in the appropriate block on DA Form 1940.

Step 3. Compute K. Record to six decimal places (round the answer).

$$K = K_o[1 + (XVIII)q^2 + 0.00003\, q^4]$$

where—

K_o = *the scale factor at the CM (0.9996)*

XVIII = *the Table 18 value*

q = *a factor used to convert E′ to millionths*

Step 4. Obtain the Table 18 (denoted by XVIII) value. The XVIII value is extracted from the tables in DMS ST 045, using the MID N as the argument. Interpolate to compute the XVIII value to six decimal places (round the answer). An example follows:

MID N	*XVIII Value*
1) 4,200,000	*1) 0.012321*
2) 4,286,000	*2) Unknown*
3) 4,300,000	*3) 0.012318*

$$\frac{MID\ N\ (2) - MID\ N\ (1)}{MID\ N\ (3) - MID\ N\ (1)} = \frac{XVIII\ (2) - XVIII\ (1)}{XVIII\ (3) - XVIII\ (1)}$$

$$\frac{4{,}286{,}000 - 4{,}200{,}000}{4{,}300{,}000 - 4{,}200{,}000} = \frac{XVIII\ (2) - 0.012321}{0.012318 - 0.012321}$$

$$\frac{86{,}000}{100{,}000} = \frac{XVIII\ (2) - 0.012321}{-0.000003}$$

$$0.86 = \frac{XVIII\ (2) - 0.012321}{-0.000003}$$

$$XVIII\ (2) - 0.012321 = 0.86(-0.000003)$$

$$XVIII\ (2) - 0.012321 = -0.00000258$$

$$XVIII\ (2) = 0.012321 - 0.00000258$$

$$XVIII\ (2) = 0.01231842$$

$$\approx 0.012318$$

Step 5. Compute E′ by subtracting 500,000 from the MID E. Record to 1,000 meters as an absolute value.

E′= MID E - 500,000 = 312,000 - 500,000 = -188,000 m

where—
E′= absolute value of MID E

Step 6. Compute q by multiplying E′ by 0.000001. Record to six decimal places (round the answer).

$q = E' \cdot 0.000001 = 188{,}000 \cdot 0.000001 = 0.188000$

where—
q = a factor used to convert E′ millionths

Step 7. Compute q^2 and q^4. Record to six decimal places (round the answers).

$q^2 = 0.188000^2 = 0.035344$
$q^4 = 0.188000^4 = 0.001249$

Step 8. Compute K. Record to six decimal places (round the answer).

$K = K_o[1 + (XVIII)\, q^2 + 0.00003\, q^4]$
$= 0.9996[1 + 0.012318 \cdot 0.035344 + 0.00003 \cdot 0.001249]$
$= 1.000035$

where—
K_o = *the scale factor at the CM (0.9996)*
q = a factor used to convert E′ millionths

Step 9. Compute a scale factor used to reduce the grid distance (denoted by K★) by multiplying K by the SLC. Record to six decimal places (round the answer).

$K★ = K \cdot SLC = 1.000035 \cdot 0.999989 = 1.000024$

NOTE: After computing K and K★, record the values in the "Scale Factor x SLC" blocks on DA Form 1940 beside the appropriate corrected field distance.

Step 10. Compute grid distances as follows.

- Taped distances (corrected horizontal field distances) are reduced to grid distances by multiplying the taped distance by K★.

  $G = H \cdot K★$

  where—
  G = grid distance
  H = taped distance

- EDME distances (reduced geodetic distances) are corrected by multiplying the geodetic distance by K.

  $G = S \cdot K$

  where—
  G = grid distance
  S = geodetic distance

NOTE: Compute the total length of the traverse. Record to three decimal places in the "Length of Traverse" block on DA Form 1940 *(Figure C-10)*.

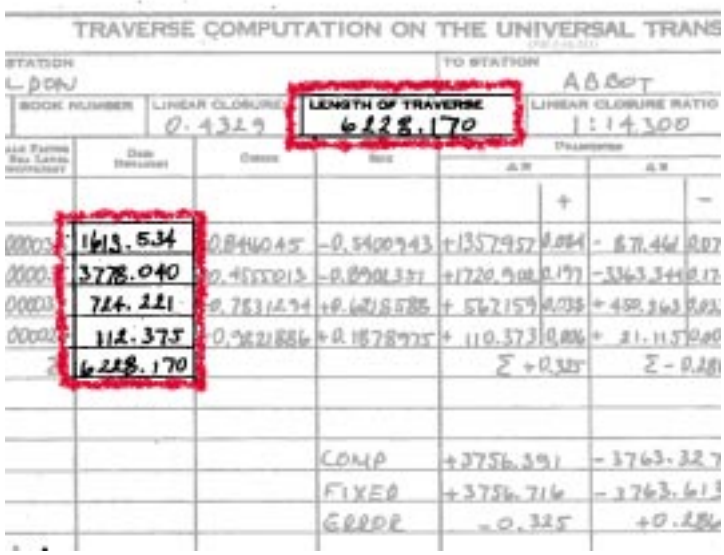

Figure C-10. Example 6 (Portion of DA Form 1940)

C-10. Refer to *Figure C-11* when working steps 1 through 3:

Step 1. Compute the cosines and sines of the azimuths. Record to seven decimal places with the sign (round the answer).

Step 2. Compute the dNs and the dEs.

- The dN is computed by multiplying the grid distance by the cosine of the azimuth. Record to three decimal places with the sign (round the answer).

  dN = grid distance • cos (t)

- The dE is computed by multiplying the grid distance by the sine of the azimuth. Record to three decimal places with the sign (round the answer).

  dE = grid distance • sin (t)

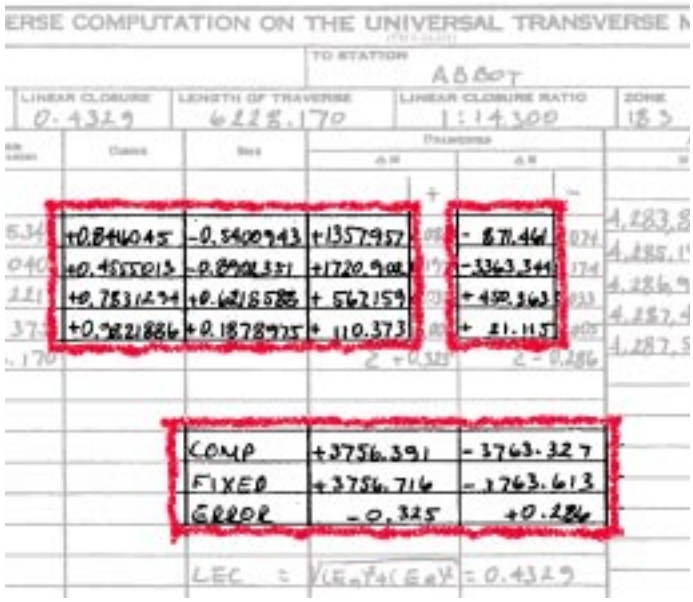

ERSE COMPUTATION ON THE UNIVERSAL TRANSVERSE M

TO STATION ABBOT

LINEAR CLOSURE	LENGTH OF TRAVERSE	LINEAR CLOSURE RATIO	ZONE
0.4329	6228.170	1:14300	18 S

	+0.846045	-0.5400943	+1357.957	- 871.461	4,283,8
	+0.4555013	-0.8902331	+1720.902	-3363.344	4,285,1
	+0.7531234	+0.6218586	+ 567.159	+ 459.363	4,286,9
	+0.9821886	+0.1878975	+ 110.373	+ 21.115	4,287,4
			2 +0.325	2 -0.286	4,287,5

COMP	+3756.391	-3763.327
FIXED	+3756.716	-3763.613
ERROR	-0.325	+0.286

LEC = $\sqrt{(E_n)^2+(E_e)^2}$ = 0.4329

Figure C-11. Example 7 (Portion of DA Form 1940)

Step 3. Compute errors in the dN and the dE (denoted by En and Ee).

- Compute the En by using the following formula. Record to three decimal places with the sign.

  En = computed dN - fixed dN

  Algebraically add the column of dNs to get the computed dN. Record to three decimal places with the sign.

  +1,357.957
  +1,720.902
  +567.159
  +110.373
  Computed dN = +3,756.391

  Subtract the fixed starting northing from the fixed ending northing to get the fixed dN. Record to three decimal places with the sign.

  Fixed ending northing = +4,287,595.893
  Fixed starting northing = +4,283,839.177
  Fixed dN = +3,756.716

  En = computed dN - fixed dN = +3,756.391 - (+3,756.716) = -0.325

- Compute the Ee by using the following formula. Record to three decimal places with the sign.

  Ee = computed dE - fixed dE

  Algebraically add the column of dEs to get the computed dE. Record to three decimal places with the sign.

	-871.461
	-3,363.344
	+450.363
	+21.115
Computed dE =	*-3763.327*

  Subtract the fixed starting easting from the fixed ending easting to get the fixed dE. Record to three decimal places with the sign.

Fixed ending easting	=	*+310,461.502*
Fixed starting easting	=	*+314,225.115*
Fixed dE	=	*-3,763.613*

  Ee = computed dE - fixed dE = -3,763.327 - (-3,763.613) = +0.286

C-11. Refer to *Figure C-12* when working steps 1 through 5.

Step 1. Compute the LEC. Record to four decimal places in the "Linear Closure Ratio" block on DA Form 1940. Compute the LEC by using the following formula:

$$LEC = \sqrt{En^2 + Ee^2} = \sqrt{(-0.325)^2 + 0.286^2}$$

$$= \sqrt{0.105625 + 0.081796} = 0.4329$$

Step 2. Compute the RC. Round down to the nearest 100. Record in the "Linear Closure Ratio" block on DA Form 1940. Compute the RC by dividing the length of traverse (in meters) by the LEC. Use the following formula:

$$RC = 1{:}\frac{\text{length of traverse (m)}}{LEC} = 1{:}\frac{6,228.170}{(0.4329)} = 1{:}14,387.087 = 1{:}14,300$$

Step 3. Compute the AE for position closure. Since this is a third-order, Class I traverse, the AE for position closure is equal to 0.4 times the square root of the distance of the traverse in kilometers. Compute the AE for position closure by using the following formula (found in DMS ST 031) (truncate and record the answer to four decimal places):

$$AE = (0.4)\sqrt{k} = (0.4)\sqrt{6.22817} = 0.9982$$

where—
k = the distance of the traverse in kilometers

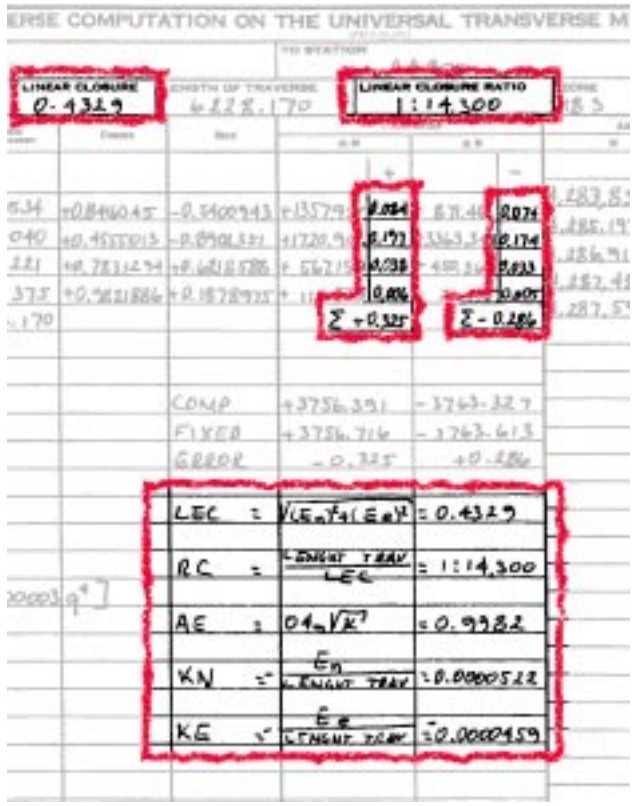

Figure C-12. Example 8 (Portion of DA Form 1940)

NOTE: The LEC must be compared to the AE. If the LEC is equal to or less than the AE, the traverse has met specifications. If the LEC is greater than the AE, no further computations are necessary.

Step 4. Compute the correction factors (correction to northing [denoted by KN] and correction to easting [denoted by KE]) to be used in adjusting the traverse.

- KN is computed by dividing the En by the length of traverse in meters then changing the sign of the answer. Record to seven decimal places with the sign (round the answer).

$$KN = -\left(\frac{En}{length\ of\ traverse}\right) = -\left(\frac{-0.325}{6{,}228.170}\right) = +0.0000522$$

- KE is computed by dividing the Ee by the length of traverse in meters then changing the sign of the answer. Record to seven decimal places with the sign (round the answer).

$$KE = -\left(\frac{Ee}{length\ of\ traverse}\right) = -\left(\frac{+0.286}{6{,}228.170}\right) = -0.0000459$$

NOTE: A correction factor will always have the opposite sign of the En and the Ee.

Step 5. Compute corrections to dNs and dEs.

- Corrections to dNs are computed by multiplying KN by the grid distance. This is done for each section of the traverse. Record to three decimal places with the sign (round the answer).

  Correction to dN = KN • grid distance
  = +0.0000522 • 1,613.534 (first distance)
  = +0.084

- Corrections to dEs are computed by multiplying KE by the grid distance. This is done for each section of the traverse. Record to three decimal places with the sign (round the answer).

  Correction to dE = KE • grid distance
  = -0.0000459 • 1,613.534 (first distance)
  = -0.074

- After all the corrections are recorded, sum the columns. The sum of the corrections must equal the errors of dN and dE with the opposite sign. If, because of rounding errors, the sum does not exactly equal the error of dN or dE, this difference must be distributed. For uniformity, the largest corrections are changed by one unit (third decimal place) until the correct sum is obtained.

dN	*dE*	*Correction to dE*	*New dE*
+0.084	*-0.074*		*-0.074*
+0.197	*-0.173*	*-0.001*	*-0.174*
+0.038	*-0.033*		*-0.033*
+0.006	*-0.005*		*-0.005*
+0.325	*-0.285*		*-0.286*

- The sum of the dN corrections is exactly equal to the error (-0.325) with the opposite sign.
- The sum of the dE corrections is different by 0.001 from the error (+0.286). Therefore, an additional 0.001 is applied to the largest correction (0.173).

C-12. Refer to *Figure C-13* when working steps 1 and 2.

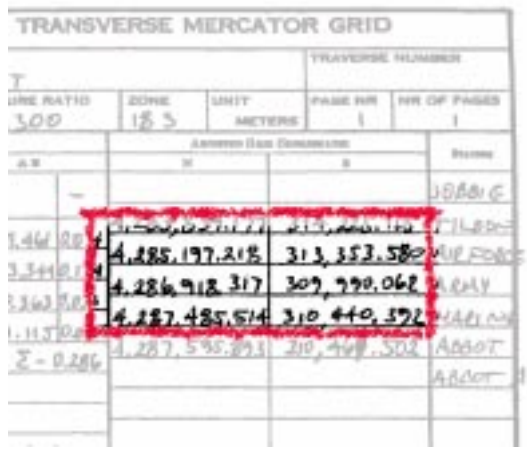

Figure C-13. Example 9 (Portion of DA Form 1940)

Step 1. Compute the adjusted grid coordinates (northings and eastings).

- To compute the adjusted northing, algebraically add the dN and the correction of dN to the northing of the preceding station. Record to three decimal places.

dN	=	*+1,357.957*
Correction to dN	=	*+0.084*
Northing for TILDON	=	*+4,283,839.177*
Northing for AIR FORCE	=	*+4,285,197.218*

- To compute the adjusted easting, algebraically add the dE and the correction of dE to the easting of the preceding station. Record to three decimal places.

dE	=	*-871.461*
Correction to dE	=	*-0.074*
Easting for TILDON	=	*+314,225.115*
Easting for AIR FORCE	=	*+313,353.580*

NOTE: Continue in a like manner for each station. As a math check, apply the last dN and the last correction of dN to the northing of the preceding station. The answer must equal the fixed northing of the closing station. The same is true for the easting.

Step 2. Sign and date the form.

COMPUTATION OF A C-FACTOR

C-13. Compute the C-factor. Record on DMS Form 5820-R. Refer to *Figure C-14 and Figure C-15, page C-26,* when working steps 1 through 15. The step numbers correspond to the numbered blocks on *Figure C-14*. *Figure C-15* shows a completed DMS Form 5820-R.

Step 1. Complete the heading information (1).

Step 2. Record the stadia constant for the instrument (2).

Step 3. Record the backsight-rod (near-rod) readings (in millimeters) (3a).

- Compute and record stadia intervals (in millimeters) (3b). If the difference is greater than 3, reobserve.
- Compute and record the sum of the intervals (3c).
- Compute and record the mean middle-wire reading (in millimeters) to one decimal place (3d).
- Compute and record the sum of the three-wire readings (in millimeters) (3e).

Step 4. Record the foresight-rod (far-rod) readings (in millimeters) (4a).

- Compute and record the stadia intervals (in millimeters) (4b). If the difference is greater than 3, reobserve.
- Compute and record the sum of the intervals (4c).
- Compute and record the mean middle-wire reading (in millimeters) to one decimal place (4d).
- Compute and record the sum of the three-wire readings (in millimeters) (4e).

Step 5. Record the backsight-rod (near-rod) readings (in millimeters) (5a).

- Compute and record the stadia intervals (in millimeters) (5b). If the difference is greater than 3, reobserve.
- Compute and record the sum of the intervals (5c).
- Compute and record the mean middle-wire reading (in millimeters) to one decimal place (5d).

Step 6. Record the foresight-rod (far-rod) readings (in millimeters) (6a).

- Compute and record the stadia intervals (in millimeters) (6b). If the difference is greater than 3, reobserve.
- Compute and record the sum of the intervals (6c).
- Compute and record the mean middle-wire reading (in millimeters) to one decimal place (6d).

Step 7. Compute and record the cumulative totals as follows:

3e + the sum of the second set of near-rod readings from 5a (7a)

3d + 5d (7b) (perform a page check 7a ÷ 3)

3c + 5c (7c)

4e + the sum of the second set of near-rod readings from 6a (7d)

4d + 6d (7e) (perform a page check 7d ÷ 3)

4c + 6c (7f)

7f - 7c (7g)

Collimation Check

Project	Location	Organization
1	1	1

Observer	Recorder	Instrument	Sun	Wind	Weather
1	1	1	1	1	1

From	To	Date	Time	Line or Net	Page No.	No. of Pgs.
		1	1	1		

Station	Backsight Face of rod	Mean	Back of rod	Interval	Sum of Intervals	Foresight Face of rod	Mean	Back of rod	Interval	Sum of Intervals	Remarks
	3a					4a					STADIA
	3a	3d		3b		4a	4d		4b		CONSTANT
	3a			3b	3c	4a			4b	4c	2
	3e				3c	4e				4c	
	5a					6a					
	5a	5d		5b		6a	6d		6b		
	5a			5b	5c	6a			6b	6c	
	7a	7b			7c	7d	7e			7f	
						C & R #1	- 8b		-	7c	
MEAN MIDDLE WIRE						C & R #2	- 8c		SUM (1)	7g	
SUM			SUM MEAN MIDDLE WIRE (FORESIGHT)				- 8d				
ROD CORRECTIONS			SUM MEAN MIDDLE WIRE (BACKSIGHT)				7b			±	
CURVATURE & REFRACTION					SUM (1)	7g	8e		C =	9	
NOTE:										* (6c)	
CORRECTION IS IN ROD										11a	CORR. TO MIDDLE WIRE
UNITS										+ (6a)	
										11b	CORR. ROD READING
SIGHT DISTANCE											

METERS	YARDS	C & R
00	00	----------
27.0	28.2	00 ----------
46.8	48.9	0.1 ----------
60.4	63.1	0.2 ----------
71.4	74.7	0.3 ----------
81.0	84.7	0.4 ----------
89.5	93.6	0.5 ----------
97.3	101.8	0.6 ----------
104.5	109.3	0.7 ----------
111.3	116.4	0.8 ----------

INST OP INT 12

1st COMP INT 15

2nd COMP INT

DMS Form 5820-R, JAN 97

Sample

Figure C-14. DMS Form 5820-R

Collimation Check

Project	Location	Organization			
Example	Fort Belvoir, Virginia	DMS			
Observer	**Recorder**	**Instrument**	**Sun**	**Wind**	**Weather**
SFC Jones	SGT Smith	WILD NA2-1234	Clear	Calm	Warm

From	To	Date	Time	Line or Net	Page No.	No. of Pgs.
		30 Sep XX	0813-0835	Belvoir Net 1		

Station	Backsight Face of rod	Mean	Back of rod	Interval	Sum of Intervals	Foresight Face of rod	Mean	Back of rod	Interval	Sum of Intervals	Remarks
	1821					1055					STADIA
	1771	1771.0		050		0680	0679.7		375		CONSTANT
	1721			050	100	0304			376	751	0.100
	5313	1771.0			100	2039	0679.7			751	
	1476					2908					
	1432	1432.0		044		2530	2530.7		378		
	1388			044	088	2154			376	754	
	9609	3203.0			188	9631	3210.4			1505	
						C & R #1	-0.4		-	188	
MEAN MIDDLE WIRE						C & R #2	-0.4		SUM (1)	1317	
SUM			SUM MEAN MIDDLE WIRE (FORESIGHT)				-3209.6				
ROD CORRECTIONS			SUM MEAN MIDDLE WIRE (BACKSIGHT)				3203.0			±	
CURVATURE & REFRACTION					SUM (1)	1317	-6.6		C =	-.0050	
NOTE:										*754	
CORRECTION IS IN ROD										-3.8	CORR. TO MIDDLE WIRE
UNITS										+2530.0	
										2526.2	CORR. ROD READING
SIGHT DISTANCE										2.526	

METERS	YARDS	C & R
00	00	
27.0	28.2	00
46.8	48.9	0.1
60.4	63.1	0.2
71.4	74.7	0.3
81.0	84.7	0.4
89.5	93.6	0.5
97.3	101.8	0.6
104.5	109.3	0.7
111.3	116.4	0.8

Sample

FOR CLASSROOM PURPOSES ONLY

INST OP INT _____

1st COMP INT _____

2nd COMP INT

DMS Form 5820-R, JAN 97

Figure C-15. Sample Completed DMS Form 5820-R

Step 8. Apply the correction for C&R. Due to the short distance from the instrument to the near rod, no corrections are required to the near-rod readings.

- Use the far-rod distance *(4c ÷ 10)* as an argument to determine the second correction. *Table C-1* shows correction factors for C&R according to the observed distance. Record the correction from *Table C-1* in the C&R number 1 block (8b).
- Use the far-rod distance *(6c ÷ 10)* as an argument to determine the correction. Record the correction from *Table C-1* in the C&R number 2 block (8c).
- Correct the sum of the far-rod mean middle-wire readings for C&R. Algebraically add the sum of 8b and 8c to 7e. Since the correction is always negative, just subtract 8b and 8c from 7e (8d).
- Algebraically add 8d and 7b. Record the sum with the sign (8e). 8d is always negative.

Table C-1. Correction Factors for C&R

Distance (m)	Correction to Rod (m)
0 to 27.0	- 0.0
27.1 to 46.8	- 0.1
46.9 to 60.4	- 0.2
60.5 to 71.4	- 0.3
71.5 to 81.0	- 0.4
81.1 to 89.5	- 0.5
89.6 to 97.3	- 0.6
97.4 to 104.5	- 0.7

Step 9. Compute the C-value by dividing 8e by 7g. Truncate and record to four decimal places with the sign (9).

NOTE: If the sum of the far-rod mean middle-wire readings (8d) is larger than the sum of the near-rod mean middle-wire readings (7b), the C-value is negative.

Step 10. Compare the C-value with that allowed for the instrument. The allowable C-value in most instruments is ±0.004. If the C-value is within specifications, no further computations are required.

Step 11. Correct the C-value if it is not within the specifications.

- The correction to the middle wire (in millimeters) is computed by multiplying the sum of the rod intervals of the last foresight (shown in 6c) by the C-value (shown in 9). Compute to one decimal place (round the answer) (11a).

- The correction to the middle wire (11a) is added algebraically to the last foresight middle-wire rod reading (shown in 6a) to obtain the corrected rod reading. Compute to three decimal places (divide the correction by 1,000 to convert to meters before applying) (round the answer) (11b).

Step 12. Initial the form (12).

Step 13. Perform field adjustments.

Step 14. Repeat steps 1 through 13 until the C-value is within specifications.

Step 15. Give the recording form to the instrument operator once it has been determined that the instrument is within specifications. The instrument operator will check the form for completeness and the computations for correctness and initial the form (15).

COMPUTATION OF A LEVEL LINE

C-14. Compute a level line on DA Form 1942. Refer to *Figure C-16, page C-30,* when working steps 1 through 20 (the step numbers correspond to the numbered blocks). *Figure C-17, page C-31,* shows a completed DA Form 1942. Data will be required from the field notes (DA Form 5820-R) shown in *Figures C-18 through C-21, pages C-32 through C-35*.

Step 1. Complete the headings (1).

Step 2. Record the name of the–

- Beginning BM (2a).
- BM whose elevation is being computed (2b).
- Ending BM (2c).

Step 3. Record the name of the–

- Beginning BM for each section (3a).
- Ending BM for each section (3b).

Step 4. Record the name of the beginning BM (4).

Step 5. Record the direction of the run (forward [F] or backward [B]) (5).

Step 6. Abstract the length of the forward and backward runs per section from the level field notes. Record to the nearest 0.001 kilometer, in their respective directions (6).

Step 7. Compute the length of the line by adding the shortest distance of each section of the level line (7a). Record the total length of the line (7b).

Step 8. Compute the observed DE of the forward and backward runs per section from the level field notes. Record to four decimal places with the sign (in their respective running directions) (8).

Step 9. Compute the DE between the forward and the backward runs per section. Record to four decimal places as an absolute value (no algebraic signs) (9).

Step 10. Determine the mean DE by computing the absolute mean of the forward and the backward DE. Give the mean DE the algebraic sign of the forward run. Record to four decimal places (round the answer) (10).

Step 11. Record the known elevation of the beginning BM (11).

Step 12. Record the known elevation of the ending BM (12).

Step 13. Compute the observed elevation by algebraically adding the mean difference (shown in 10) and the elevation of the beginning BM (shown in 11). Record to four decimal places (13a). Compute each successive observed elevation by algebraically adding it to the preceding elevation and the respective section's mean DE. Record to four decimal places (13b).

NOTE: The last entry will be the observed elevation of the ending BM. This entry must be compared to the fixed ending elevation.

Step 14. Record the known elevation of the ending BM (from step 12) (14).

Step 15. Compute the closure by subtracting the known elevation of the ending BM (shown in 14) from the computed observed elevation of the ending BM (shown in 13b). Record to four decimal places with the sign (15).

Step 16. Compute the AE. Truncate and record to four decimal places (16). For third-order specifications, use the following formula:

$$AE = \pm 0.012 \bullet \sqrt{Km}$$

where—

Km = length of line in kilometers (from 7b)

Compare the AE (16) to the closure (shown in 15). If the numerical value of the closure is equal to or smaller than the AE, the level line meets third-order specifications. If it does not, there is no need to continue with the computations on DA Form 1942.

Step 17. Compute the correction per kilometer. Divide the closure (shown in 15) by the total length of the line (shown in 7b) and change the sign. Record to six decimal places with the sign (round the answer) (17).

Step 18. Compute the correction for each section. Multiply the length of the line (shown in 7a) of each section by the correction per kilometer (shown in 17). Record to four decimal places with the sign (round the answer) (18).

NOTE: The correction to the final section must be equal to the closure (15), with the opposite sign.

Step 19. Compute the adjusted elevation. Algebraically add the correction (shown in 18) to the observed elevation (shown in 13a) of each station. Record to four decimal places (round the answer) (19).

Step 20. Sign and date the form (20).

LINE								ORDER 1	COMPUTATION OF LEVELS (FM 3-34.331)			
PROJECT 1				ORGANIZATION 1					CLOSURE (METERS) (FEET) 15			
LOCATION 1				LENGTH OF LINE (KMS.) (MILES) 7b					CORRECTION PER (KM.) (MILE) 17			
SECTION	LENGTH mi. km.	DIST. FROM B.M. 4 mi. km.	F B	DIFFERENCE feet meters	F-B DIFF.	MEAN DIFFERENCE	B.M.		OBS. ELEV. feet meters	CORR.	ADJ. ELEV. feet meters	REMARKS
							2a				11	2a
3a	6		5	8								
3b	6	7a	5	8	9	10	2b		13a	18	19	2b
3a	6		5	8								
3b	6	7b	5	8	9	10	2c		13b	18	12	2c
									-14			

									15	=	Closure	
									17	=	Corr	
											per km	
									AE = 16			
COMPUTED BY 20				DATE 20		CHECKED BY					DATE	

DA FORM 1942, FEB 57

USAPPC V1.00

Sample

Figure C-16. DA Form 1942

LINE												
BASS to TROUT								ORDER Third	COMPUTATION OF LEVELS (FM 3-34.331)			
PROJECT Example				ORGANIZATION DMS					CLOSURE (METERS) (FEET) -0.0042			
LOCATION Fort Belvoir, Virginia				LENGTH OF LINE (KMS.) (MILES) 0.470					CORRECTION PER (KM.) (MILE) +0.0008936			
SECTION	LENGTH mi. km.	DIST. FROM B.M. BASS mi. km.	F B	DIFFERENCE feet meters	F-B DIFF.	MEAN DIFFERENCE	B.M.	OBS. ELEV. feet meters	CORR.	ADJ. ELEV. feet meters	REMARKS	
							BASS			165.982	BASS	
BASS	0.330		F	-1.7276								
D-2	0.363	0.330	B	1.7256	0.0020	-1.7266	D-2	164.2554	+0.0029	164.2583	D-2	
D-2	0.150		F	-4.4563								
TROUT	0.140	0.470	B	4.4550	0.0013	-4.4556	TROUT	159.7998	+0.0042	159.804	TROUT	
								-159.804				
								Closure = -0.0042				
								Length = 0.470				
								Correction per km = 0.008936				
								AE = ± 0.012	X	$\sqrt{\text{distance in km}}$	= ±0.0082	

COMPUTED BY	DATE	CHECKED BY	DATE
SPC Doe	2 April 1994	SSG Zambrano	2 April 1994

DA FORM 1942, FEB 57

USAPPC V1.00

Sample

Figure C-17. Sample Completed DA Form 1942

Three-Wire Leveling
For use of this form, see FM 3-34.331; the proponent agency is TRADOC.

Project	Location	Organization			
Example	Fort Belvoir, Virginia	DMS			
Observer	**Recorder**	**Instrument**	**Sun**	**Wind**	**Weather**
SFC JONES	SGT SMITH	Wild NA2 - 1234	Warm	Windy	Clear

From	To	Date	Time	Line or Net	Page no.	No. of pgs.
BASS	D2	06 October 86	0730 - 0820	Training 1	1	4

Station	Backsight Face of rod	Mean	Back of rod	Interval	Sum of intervals	Foresight Face of rod	Mean	Back of rod	Interval	Sum of intervals	Remarks
BASS	1292					3031					
	1019	1019.3		273		2750	2750.3		281		
	0747			272	545	2470			280	561	
	3058	1019.3			545	8251	2750.3			561	
	1018					2779					
	0787	0787.3		231		2556	2556.3		223		
	0557			230	461	2334			222	445	
	5420	1806.6			1006	15920	5306.6			1006	
	3001					1255					
	2692	2691.7		309		0919	0919.3		336		
	2382			310	619	0584			335	671	
	13495	4498.3			1625	18678	-6225.9			1677	D2
							+4498.3			1625	
						FDE =	-1.7276		F distance	= 3302	
									km =	0.3302	

INST OP INT _____

Ist COMP INT-_____

2nd COMP INT _____

DA Form 5820-R, AUG 89

Sample

Figure C-18. DA Form 5820-R (BASS to D2)

Three-Wire Leveling
For use of this form, see FM 3-34.331; the proponent agency is TRADOC.

Project	Location	Organization			
Example	Fort Belvoir, Virginia	DMS			
Observer	**Recorder**	**Instrument**	**Sun**	**Wind**	**Weather**
SFC JONES	SGT SMITH	Wild NA2 - 1234	Warm	Windy	Clear
From D2	**To** BASS	**Date** 06 October 86	**Time** 0830 - 0920	**Line or Net** Training 1	**Page no.** 2 / **No. of pgs.** 4

Station	Backsight Face of rod	Mean	Back of rod	Interval	Sum of intervals	Foresight Face of rod	Mean	Back of rod	Interval	Sum of intervals	Remarks
D2	1201					2963					
	0850	0850.3		351		2623	2622.3		340		
	0500			350	701	2281			342	682	
	2551	0850.3			701	7867	2622.3			682	
	2657					0899					
	2406	2406.0		251		0638	0637.7		261		
	2155			251	502	0376			262	523	
	9769	3256.3			1203	9780	3260.0			1205	
	3081					1361					
	2779	2779.3		302		1050	1050.0		311		
	2478			301	603	0739			311	622	
	18107	+6035.6			1806	12930	4310.0			1827	BASS
		-4310.0								1806	
	BDE =	+1.7256							B distance	3633	
									km	0.3633	
FDE =	-1.7276				AE = 0.012	√distance km		F distance	0.3302		
BDE =	+1.7256				AE = ±0.012	√0.3302					
								B distance	0.3633		
E C =	-0.0020				AE =	±0.0068					

INST OP INT _____

Ist COMP INT-_____

2nd COMP INT _____

DA Form 5820-R, AUG 89

Sample

Figure C-19. DA Form 5820-R (D2 to BASS)

Three-Wire Leveling

For use of this form, see FM 3-34.331; the proponent agency is TRADOC.

Project	Location	Organization			
Example	Fort Belvoir, Virginia	DMS			
Observer	**Recorder**	**Instrument**	**Sun**	**Wind**	**Weather**
SFC JONES	SGT SMITH	Wild NA2 - 1234	Warm	Windy	Clear

From	To	Date	Time	Line or Net	Page no.	No. of pgs.
D2	TROUT	06 October 86	0930 - 1030	Training 1	3	4

Station	Backsight Face of rod	Mean	Back of rod	Interval	Sum of intervals	Foresight Face of rod	Mean	Back of rod	Interval	Sum of intervals	Remarks
D2	0901					3163					
	0700	0700.7		201		2987	2986.3		176		
	0501			199	400	2809			178	354	
	2102	0700.7			400	8959	2986.3			354	
	0869					3063					
	0694	0694.0		175		2864	2864.7		199		
	0519			175	350	2667			197	396	
	4184	1394.7			750	17553	-5851.0			750	TROUT
							+1394.7			750	
						FDE =	-4.4563		F distance	1500	
									km	0.1500	

INST OP INT _____

Ist COMP INT-_____

2nd COMP INT _____

DA Form 5820-R, AUG 89

Sample

Figure C-20. DA Form 5820-R (D2 to TROUT)

Three-Wire Leveling
For use of this form, see FM 3-34.331; the proponent agency is TRADOC.

Project	Location	Organization			
Example	Fort Belvoir, Virginia	DMS			
Observer	**Recorder**	**Instrument**	**Sun**	**Wind**	**Weather**
SFC JONES	SGT SMITH	Wild NA2 - 1234	Warm	Windy	Clear

From	To	Date	Time	Line or Net	Page no.	No. of pgs.
TROUT	D2	06 October 86	1030 - 1130	Training 1	4	4

Station	Backsight Face of rod	Mean	Back of rod	Interval	Sum of intervals	Foresight Face of rod	Mean	Back of rod	Interval	Sum of intervals	Remarks
TROUT	2900					0744					
	2712	2712.3		188		0542	0542.7		202		
	2525			187	375	0342			200	402	
	8137	2712.3			375	1628	0542.7			402	
	3146					0868					
	2994	2993.7		152		0708	0708.3		160		
	2841			153	305	0549			159	319	
	17118	+5706.0			680	3753	1251.0			721	D2
		-1251.0								680	
									B distance	1401	
	BDE =	+4.4550									
									km	0.1401	
FDE =	-4.4563				AE = 0.012	√distance km		F distance	0.1500		
BDE =	+4.4550				AE = ±0.012	√0.1401					
								B distance	0.1401		
E C =	-0.0013				AE =	±0.0044					

INST OP INT _____

Ist COMP INT-_____

2nd COMP INT _____

DA Form 5820-R, AUG 89

Sample

Figure C-21. DA Form 5820-R (TROUT to D2)

Appendix D

Survey Forms

Surveyors use a variety of forms in the accomplishment of their duties. *Table D-1* includes a list of forms (not addressed in this manual) used by surveyors.

Table D-2. Survey Forms

Number	Title	Date
DA Form 1900	Conversion of Mean Time to Sidereal Time	1 February 1957
DA Form 1901	Conversion of Sidereal Time to Mean Time	1 February 1957
DA Form 1902	Conversion of Mean Time to Apparent Time	1 February 1957
DA Form 1903	Azimuth by Direction Method	1 February 1957
DA Form 1905	Azimuth by Hour Angle Method	1 February 1957
DA Form 1907	Azimuth by Altitude Method	1 February 1957
DA Form 1909	Longitude by the Altitude of Stars Near the Prime Vertical	1 October 1964
DA Form 1911	Altitude and Azimuth (Sin-Cos)	1 February 1957
DA Form 1914	Computation of Base Line	1 February 1957
DA Form 1915	Abstract of Levels and Computation of Inclination Corrections	1 February 1957
DA Form 1917	List of Directions	1 February 1957
DA Form 1918	Computation of Triangles	1 February 1957
DA Form 1921	Reduction to Center	1 February 1957
DA Form 1922	Position Computation, _____ Order Triangulation (Logarithmic)	1 October 1964
DA Form 1924	Inverse Position Computation	1 February 1957
DA Form 1925	Quadrilateral Adjustment (Least Squares Method)	1 February 1957
DA Form 1927	Latitude and Longitude Adjustment	1 February 1957
DA Form 1930	Special Angle Computation	1 February 1957
DA Form 1931	Traverse Computation (Geographic)	1 February 1957
DA Form 1935	Grid Azimuth (t) and Grid Length	1 February 1957
DA Form 1936	List of Directions, UTM Grid	1 February 1957
DA Form 1937	Computation of Triangles (UTM Grid)	1 February 1957
DA Form 1939	Reduction of Taped Distances	1 February 1957
DA Form 1941	Grid and Declination Computations	1 February 1957
DA Form 1944	Computation of Elevations and Refractions From Reciprocal Observations (Logarithmic)	1 February 1957
DA Form 1948	Altimeter Leveling	1 February 1957

Table D-2. Survey Forms (continued)

Number	Title	Date
DA Form 1949	Corrected Altimeter Readings Prorated According to Time	1 February 1957
DA Form 1953	Universal Polar Stereographic Transformations	1 February 1957
DA Form 1954	Plane Coordinates From Geographic Coordinates on the Transverse Mercator Projection (Calculating Machine Computation)	1 February 1957
DA Form 1955	Geographic Coordinates From Transverse Mercator Grid Coordinates (Calculating Machine Method)	1 February 1957
DA Form 1956	Plane Coordinates From Geographic Coordinates on the Lambert Projection (Calculating Machine Computation)	1 February 1957
DA Form 1957	Geographic Coordinates From Lambert Grid Coordinates (Calculating Machine Computation)	1 February 1957
DA Form 1959	Description or Recovery of Horizontal Control Station	1 October 1964
DA Form 2839	Latitude From Zenith Distance of Polaris	1 October 1964
DA Form 2847	Comparison of Chronometer and Radio Signals	1 October 1964
DA Form 2850	Astronomic Results	1 October 1964
DA Form 2854	Electronic Distance Measurement Summary	1 October 1964
DA Form 2855	Geodimeter (Model 4) Observations and Computations	1 October 1964
DA Form 2856	Field Sheet, Tellurometer Data Entries (MRA3 MK11)	1 October 1964
DA Form 2857	Field Sheet, Micro-Chain Data Entries	1 October 1964
DA Form 4253	Horizontal Direction or Angle Book	June 1974
DA Form 4446	Level, Transit, and General Survey Record	November 1975
DA Form 4648	Station Description Book	September 1977
DA Form 5818-R	General Survey Notes (LRA)	August 1989

Glossary

≑	perspective to
∠	angle(s)
°	degree(s)
a	azimuth of line
α	angle
κ	correction for the earth's curvature
∑	sum
′	minute(s)
″	second(s)
Δ	delta
ΔE	delta easting
ΔN	delta northing
ϕ	latitude
Φ	phi
$\mathbf{h_1}$	elevation of the occupied station
λ	longitude
θ	Theta
ρ	symbol for rho - radius of curvature
s	grid distance
σ	sigma
τ	tau
ζ	mean observed zenith distance
1D	one dimensional
1DRMS	1-deviation root-mean-square
1LT	first lieutenant
1SG	first sergeant
2D	two dimensional
2DRMS	2-deviation root-mean-square
3D	three dimensional
3DRMS	3-deviation root-mean-square
A/M	angle measure
AAF	Army airfield
AAL	additional authorizations list
AC	alternating current

accuracy the degree of conformity with a standard or the degree of perfection attained in a measurement; accuracy relates to the quality of a result and is distinguished from precision, which relates to the quality of the operation used to obtain the result

actual error the difference between the accepted value and the measured value of a physical quantity

ADA air-defense artillery

adj adjusted

adjust adjustment

adjusted position an adjusted value for the horizontal or vertical position of a survey station, in which discrepancies due to errors in the observed data are removed, that forms a coordinated and correlated system of stations

AE allowable error

AEC angular error of closure

aeronautical beacon a visual NAVAID displaying flashes of white and/or colored light to indicate the location of an airport, a heliport, a landmark, a certain point of a federal airway in mountainous terrain, or an obstruction

AG Adjutant General

AH ampere-hour

air-navigation facility any facility used in, available for use in, or designed for use in the aid of air navigation (this includes landing areas; lights; any apparatus or equipment used for disseminating weather information, signaling, radio-directional finding, or radio or other electrical communication; and any other structure or mechanism having a similar purpose of guiding or controlling the flight, the landing, or the takeoff of aircraft)

airport elevation the highest point of an airport's usable runways measured in feet from the MSL

airport lighting various lighting aids installed on airports. These aids can include 1) *airport rotating beacons*—a visual NAVAID that is operated at many airports. At civil airports, alternate white and green flashes indicate the location of the airport. At military airfields, the beacon is differentiated by dual peak (two quick) white flashes between the green flashes;
2) *approach-light systems* (ALSs)—an airport lighting facility which provides visual guidance to landing aircraft by radiating light beams in a directional pattern by which the pilot aligns the aircraft with the extended runway centerline on his final approach for landing. A number of ALS configurations exist, both with and without sequenced flashing lights. One system, the omnidirectional ALS (ODALS), consists of seven omnidirectional flashing lights located in the approach area of a nonprecision approach. Five of the lights are located on the extended runway centerline and the other two lights are located one on each side of the runway threshold;

3) *REILs*—two synchronized flashing lights, one on each side of the runway threshold, provide rapid and positive identification of the approach end of a runway;
4) *visual-approach slope indicators* (VASI)—an airport lighting facility providing vertical visual-approach slope guidance to aircraft during the approach for landing by radiating a directional pattern of high-intensity, red and white, focused light beams, which indicate to the pilot if he is above, below, or on the glide path. The term VASI also has a generic connotation for a tricolor-approach slope indicator consisting of a single light unit projecting a three-color, visual-approach path into the final approach area of the runway served by the system;
5) *pulse-light approach-slope indicators* (PLASI)—a VASI, normally consisting of a single light unit projecting a pulsating two-color, visual-approach path into the final approach area of the runway served by the system; and
6) *precision approach-path indicator*s (PAPI)—a VASI, consisting of a single row of two or four light units, usually installed on the left side of the runway served by the system

airport reference point the position of the approximate center of mass of all usable runways. This point is not strictly the center of mass of runways, since the runway width, thickness, or material is not considered in the computation. An ARP is not monumented; therefore, it is not recoverable on the ground

airport surveillance radar approach control radar that is used to detect and display an aircraft's position in the terminal area. The ASR provides range and azimuth information but does not provide elevation data (coverage of the ASR can extend up to 60 nautical miles)

air-route surveillance radar air-route traffic control center (ARTCC) radar used primarily to detect and display an aircraft's position while en route between terminal areas (coverage of the ARSR can extend up to 200 nautical miles)

AISI automated integrated survey instrument

ALP airport location point

ALS approach-light system

altimeter an aneroid barometer that is used for the measurement of approximate elevations or approximate differences of elevation

altitude the vertical angle that is measured between the plane of the observer's true horizon and a line to the object

ambiguity resolution with carrier-phase observations, the number of carrier-phase cycles between the receiver and the satellite is generally unknown and is referred to as the ambiguity and is an integer number. Single and double differences are also affected by ambiguities, which are formed by a linear combination of carrier-phase integer ambiguities (for example, a single or double differenced ambiguity). Where the integer ambiguities are unknown, they may be estimated by processing software. In some cases, these real-valued estimates may be used to determine the correct integer values, which are then held fixed. A float solution is derived when the real-valued estimates are used, rather than the integers

ang	angle
ant	antenna
AO	area of operation
AOC	airport obstruction chart
AP	airport plan
APFT	Army physical fitness test
approx	approximate
Apr	April
apron	a defined area on an airport or heliport intended to accommodate aircraft for purposes of loading and unloading passengers or cargo, refueling, parking, or maintenance (seaplanes use a ramp for access from the water to the apron)
AR	Army regulation
ARP	airport reference point
ARSR	air-route surveillance radar
ARTCC	air-route traffic control center
ARTEP	Army Training and Evaluation Program
AS	antispoofing
ASCII	American Standard Code for Information Interchange
ASPRS	American Society of Photogrammetry and Remote Sensing
ASR	airport surveillance radar
astronomical latitude	the angle between the plumb line and the plane of the celestial equator; also defined as the angle between the plane of the horizon and the axis of rotation of the earth. Astronomical latitude applies only to positions on the earth and is reckoned from the astronomic equator (0°), north and south through 90°. Astronomical latitude results directly from observations of celestial bodies, which are uncorrected for deflection of the vertical
astronomical longitude	the angle between the plane of the celestial meridian and the plane of an initial meridian that is arbitrarily chosen. Astronomical longitude results directly from observations on celestial bodies, uncorrected for deflection of the vertical
ATC	air traffic control
Aug	August
az	azimuth
azimuth	the direction of one object from another, usually expressed as an angle in degrees relative to true north (azimuths are usually measured in the clockwise direction, thus an azimuth of 90° indicates that the second object is due east of the first)
azimuth mark	the azimuth to a marked point or adjacent station that is visible from an occupied station, which is determined for use in dependent surveys

b	backward
backsight	in traversing, a backsight is a sight on a previously established traverse or triangulation station, which is not the closing sight on the traverse; in leveling, a backsight is a reading on a rod that is held on a point whose elevation has been previously determined and is not the closing sight of a level line
BAQ	basic allowance for quarters
base network	a small network of geometric figures that is used to expand from a baseline to a line of the main scheme of a triangulation network
baseline	a surveyed line that is established with more than usual care, to which surveys are referred for coordination and correlation; in GPS baseline reduction, geodetic parameters are estimated at one station relative to another, with the receivers at both sites observing common satellites simultaneously
basic control	horizontal and vertical control of third- or higher-order accuracy (determined in the field and permanently marked or monumented) that is required to control further surveys
BC	basic control
BCM	basic-control marker
bearing	the direction of one object from another, usually expressed as an angle in degrees relative to a specific primary direction (bearings differ from azimuths in that bearing values do not exceed 90°)
benchmark	a relatively permanent object, natural or artificial, bearing a marked point whose elevation above or below an adopted datum is known; usually designated as a BM, such a mark is sometimes further qualified as a PBM or as a temporary BM (TBM)
BEQ	bachelor enlisted quarters
bde	brigade
BDE	backward difference in elevation
BII	basic issue items
blast pad	a specially prepared surface that is placed adjacent to the ends of runways to eliminate the erosive effect of the high wind forces produced by airplanes at the beginning of their takeoff rolls
BM	benchmark
bn	battalion
broadcast ephemeris	the predicted satellite position in its orbit as a function of time computed from the ephemeris parameters contained in the navigation message broadcast on both the L1 and L2 carrier waves
bs	backsight
btry	battery
C^2	command and control
C	Celsius
C/A-code	coarse-acquisition code

CAD	computer-aided design
cadastral survey	a survey relating to land boundaries and subdivisions, which is made to create units suitable for the transfer of or to define the limitations of a title; surveys of the public lands of the US, including retracement surveys for the identification of and resurveys for the restoration of property lines; and for corresponding surveys outside the public lands, although such surveys are usually termed land surveys
CADD	computer-aided design and drafting
carrier phase	the phase (as measured at the antenna phase center of a GPS receiver) of two sinusoidal radio signals (the two carriers) that are continuously emitted by each GPS satellite
C-check	collimation test for leveling
CDC	consecutive Doppler counts
celestial equator	a great circle on the celestial sphere on which any point is equidistant from the celestial poles (the plane of the earth's equator, if extended, would coincide with that of the celestial equator)
celestial meridian	a vertical circle (the plane of which is perpendicular to the celestial equator) passing through both celestial poles
celestial pole	a reference point located at the point of intersection of an indefinite extension of the earth's axis of rotation and the apparent celestial sphere
celestial sphere	an imaginary sphere of infinite radius, with the earth as the center, that rotates from east to west on a prolongation of the earth's axis
central meridian	the longitude of the horizontal center of a coordinate system (this longitude value is often the longitude origin of the coordinate system); in the case of the transverse Mercator projection, the CM is the great circle/geodesic at which the projection surface (the cylinder) touches or is tangent to the earth
CEOI	communications-electronics operation instructions
CEP	circular error probable
CESI	communications-electronics standing instruction
C-factor	collimation error; error of the sighting of the level
chron	chronometer
chronometer	a portable timekeeper with compensated balance, which is capable of showing time with extreme precision and accuracy
CID	continuously integrated Doppler
circle position	a prescribed setting (reading) of the horizontal circle of a direction theodolite, which is used for observing the initial station of a series of stations
circuit closure	in leveling, it is the amount by which the algebraic sum of the measured differences of elevation around a circuit fails to equal zero

circumpolar star a star in any given latitude that never goes below the horizon; hence, its polar distance must be less than the given latitude; in astronomy, only those stars with a polar distance of less than 10° are considered in practical problems

cl closure

C/L centerline

clearway an area beyond the takeoff runway that is under the control of airport authorities where terrain or fixed obstacles may not extend above specified limits (these areas may be required for turbine-powered operations and the size and upward slope of the clearway will differ depending on when the aircraft was certified)

cm centimeter(s)

CM central meridian

COEI components of end item

collimation the line of sight or aiming line of an instrument when coincident with the physical alignment of the instrument; thus, a collimation error is the angle between the line of collimation (line of sight) of a telescope and the collimation axis of the instrument

comm communication

comp computer

compass locator a low-power, low- or medium-frequency (L/MF) NDB that is installed at the site of the outer or middle marker (MM) of an ILS (it can be used for navigation at distances of about 15 miles or as authorized in the approach procedure)

control the coordinated and correlated dimensional data, which are used in geodesy and cartography to determine the positions and elevations of points on the earth's surface or on a cartographic representation of that surface; a collective term for a system of marks or objects on the earth or on a map or a photograph whose positions or elevations, or both, have been or will be determined

control survey a survey that provides positions (horizontal or vertical) of points to which supplementary surveys are adjusted

CONUS continental United States

coordinate system an exact definition of a system of mathematics and geodetic constants that defines how a specific geographic location is converted to a set of two or three numbers (for example, an X- and Y-value [and possibly a Z-value]); in the cartographic context, most coordinate systems are Cartesian (the axes are orthogonal [perpendicular to each other]) and the units are the same on all axes; the principle exception to this is the spherical coordinate system of latitudes and longitudes

coordinates linear and/or angular quantities, which designate the position of a point in relation to a given reference frame; there are two general divisions of coordinates used in surveying—polar and rectangular; these may be further subdivided into three classes—plane coordinates, spherical coordinates, and space coordinates

coords coordinates

Corps Conversion a software program that converts horizontal coordinates to and from geographic, state-plane, and UTM systems on the NAD 27 and the NAD 83 and converts vertical coordinates on the NGVD 29 and the NAVD 88

Corpscon Corps Conversion

corr correction

CORS continuously operating reference station

cos cosine

CPT captain

C&R curvature and refraction

CTT common training task

cycle slips cycle slips occur when there are breaks in the continuity of signal in a satellite-receiver pair. Data sampling requires the choosing of the sampling rate and the starting and finishing epochs for the observations. Data editing is required for cycle slips and for data sampling

D ratio of side/sine

DA Department of the Army

datum the combination of an ellipsoid, that specifies the size and shape of the earth, and a base point from which the latitude and longitude of all other points are referenced. Before satellites, lasers, and computers, establishing precise values for these points was impossible. More recently, many datums have been established and substantial amounts of data collected based on each. Data based on one datum will not necessarily overlay data based on another datum. A *geodetic datum* is a reference surface consisting of five quantities: the latitude and longitude of an initial point, the azimuth and distance of a line from this point, and the parameters of the reference ellipsoid. It forms the basis for the computation of horizontal-control surveys in which the curvature of the earth is considered. A *leveling datum* is a level surface to which elevations are referred (usually, but not always, the MSL)

DD Department of Defense

dE difference in easting

DE difference in elevation

declination in a system of polar or spherical coordinates, the angle at the origin between a line to a point and the equatorial plane, measured in a plane perpendicular to the equatorial plane; the arc between the equator and the point measured on a great circle, which is perpendicular to the equator; as it relates to astronomy, the angular distance to a body on the celestial sphere that is measured north or south through 90° from the celestial equator along the hour circle of the body. Comparable to latitude on the terrestrial sphere and often used as a shortened term for magnetic declination

deflection of the vertical	the angular difference, at any place, between the upward direction of a plumb line (the vertical) and the perpendicular (the normal) to the reference spheroid. This difference seldom exceeds 30 seconds and is often expressed in two components—meridian and prime vertical
deg	degree(s)
det	detachment
dev	deviation
DGPS	differential global-positioning system
dH	difference in the horizontal aim
diff	difference
differencing	nondifferencing (one-way phase) is the measured carrier phase between one satellite and one receiver. Single differencing (first difference) is the difference between one-way measurements recorded at two receivers (for example, two receivers simultaneously observing a common satellite and differencing the recorded measurements). Double differencing (second difference) is the difference between two single differences (for example, two stations observing two satellites, forming differences between the site pair and the satellite pair). Triple differencing (double difference rate/epoch differences) is the differencing of double differences between consecutive epochs
dir	direction
direct leveling	the determination of DEs by the means of a continuous series of short horizontal lines. Vertical distances from these lines to adjacent ground marks are determined by direct observations on graduated rods with a leveling instrument equipped with a spirit level
direct reading	the reading of the horizontal or vertical circle of a theodolite or engineer transit with the telescope in the direct position. In field notes, a direct reading is indicated with a letter D preceding the observed value
direction finder	a radio receiver equipped with a directional sensing antenna used to take bearings on a radio transmitter
direction instrument theodolite	a theodolite in which the graduated horizontal circle remains freed during a series of observations. The telescope is pointed on a number of signals or objects in succession and the direction of each is read on the circle (usually by means of micrometer microscopes). Direction instrument theodolites are used almost exclusively in first- and second-order triangulation
dist	distance
distance angle	an angle in a triangle that is opposite the side which is used as a base in the solution of the triangle or a side whose length is to be computed
distance measuring equipment	equipment that is (airborne or ground) used to measure (in nautical miles) the slant-range distance of an aircraft from the DME NAVAID
DIVARTY	division artillery

DMA Defense Mapping Agency
DME distance measuring equipment
DMS Defense Mapping School
dN difference in northing
DOD Department of Defense
DOP dilution of precision
DPW Directorate of Public Works
D/R direct/reverse
DRU data recording unit
dsplcd displaced
DT displaced threshold
dV difference in the vertical aim

E east
EAC echelons above corps
EC error of closure
ECEF earth centered earth fixed
ecliptic the great circle of the celestial sphere that is the apparent path of the sun among the stars or of the earth as seen from the sun. It is inclined to the celestial equator at an angle of about 23°27′
EDM electronic distance measurement
EDME electronic distance measuring equipment
Ee error in easting
elev elevation
elevation the vertical distance from a datum, usually the MSL, to a point or object on the earth's surface (not to be confused with altitude, which refers to points or objects above the earth's surface)
ell ellipsoidal
ellipsoid the mathematical shape that best describes the shape of the earth and yet is relatively simple to deal with mathematically. Ellipsoids are defined with two numbers. First, the equatorial radius is specified (also referred to as the semimajor axis). Second, one of the following three numbers is given, the polar radius (also known as the semiminor axis), the eccentricity, or the flattening. Given the equatorial radius and any one of the three secondary values, the remaining secondary values can be computed. A specific determination of the size of the earth is often referred to as an ellipsoid. For example, the phrase "Clarke ellipsoid of 1866" is frequently used to refer to the measurements of the size of the earth made by Clarke in 1866
ellipsoid height the height of an object above the reference ellipsoid in use. This term is generally used to qualify an elevation as being measured from the ellipsoid as opposed to the geoid. GPS systems calculate ellipsoidal height. The geoid height at that location must be subtracted to obtain what is commonly referred to as the elevation

elongation the point in the apparent movement of a circumpolar star when the star reaches the extreme position east or west of the meridian

EM engineer manual

en engineer

En error in northing

eng engineer

engr engineer

EOR end of runway

ephemeris time a uniform measure of time that is defined by the laws of dynamics and determined in principle from the orbital motions of the planets, specifically in the orbital motion of the earth

equation of time the algebraic difference in hour angle between apparent solar time and mean solar time (usually labeled plus or minus), as it is to be applied to mean solar time to obtain apparent solar time

equinox one of the two points of intersection of the ecliptic and the celestial equator, which is occupied by the sun when its declination is 0°

error the difference between an observed and true value; a class of small inaccuracies due to imperfections in equipment or techniques, surrounding conditions, or human limitations; not to be confused with blunders or mistakes

error of closure the amount by which a quantity obtained by a series of related measurements differs from the true or fixed value of the same quantity. These include errors of closure for the following:

Angle. The amount by which the actual sum of a series of angles fails to equal the theoretically exact value of that sum.

Azimuth. The amount by which two values of the azimuth of a line, derived by different surveys or along different routes, fail to be exactly equal to each other.

Horizon. The amount by which the sum of a series of adjacent measured horizontal angles around a point fails to equal exactly 360°. Measurement of the last angle of the series is called closing the horizon (sometimes called closure of horizon).

Leveling. The amount by which two values of the elevation of the same BM, derived by different surveys or through different survey routes or by independent observations, fail to be exactly equal to each other

Loop. The error in the closure of a survey on itself.

Triangle. The amount by which the sum of the three observed angles of a triangle fails to equal exactly 180° plus the spherical excess of the triangle.

Traverse. The amount by which a value of the position of a traverse station, as obtained by computation through a traverse, fails to agree with another value of the same station as determined by a different set of observations or routes of survey

esc escape

f	forward
F	Fahrenheit
FA	field artillery
FAA	Federal Aviation Administration
FAA 405	Federal Aviation Administration Publication 405
FAO	finance and accounting office
FAR	Federal Aviation Regulation
FAR-77	Federal Aviation Regulation, Part 77
FDE	forward difference in elevation
Feb	February
FEBA	forward edge of the battle area
FED	Facilities Engineering Division
FGCC	Federal Geodetic Control Committee
FGCS	Federal Geodetic Control Subcommittee
final-approach course	a straight-line extension of a localizer, a final approach radial/ bearing, or a runway centerline, all without regard to distance
fixed elevation	an elevation that has been adopted (either as a result of tide observations or previous adjustment of spirit leveling) and is held at its accepted value in any subsequent adjustment
FM	field manual
FM	frequency modulated
FO	forward observer
foresight	an observation of the distance and direction to the next instrument station. In traversing, a foresite is a point set ahead to be used for reference when resetting the transit or line or when verifying the alignment. In leveling, a foresite is the reading on a rod that is held at a point whose elevation is to be determined
FOUO	for official use only
FRAGO	fragmentary order
frequency	the number of complete cycles per second existing in any form of wave motion
FRNP	Federal Radio Navigation Plan
fs	foresight
FS	fire support
FSCOORD	fire-support coordinator
ft	feet, foot
G2	Assistant Chief of Staff, G2 (Intelligence)
G3	Assistant Chief of Staff, G3 (Operations and Plans)

GCA	ground-controlled approach
GDOP	geometric dilution of precision
geod	geodetic
geodesy	a branch of applied mathematics concerned with the determination of the size and shape of the earth (geoid). Direct measurements (triangulation, leveling, and gravimetric observations) determine the exact location of points on the earth's surface and its external gravitational field
geodetic control	a system of horizontal and/or vertical control stations that have been established and adjusted by geodetic methods and in which the shape and size of the earth (geoid) have been considered in position computations
geodetic latitude	the angle at which the normal (at a point on the reference spheroid) forms with the plane of the geodetic equator. Geodetic latitudes are reckoned from the equator, but in the horizontal-control survey of the US, they are computed from the latitude of station Meades Ranch as prescribed in NAD 27
geodetic leveling	spirit leveling of a high order of accuracy, usually extended over large areas, to furnish accurate vertical control as a basis for the control in the vertical dimension for all surveying and mapping operations
geodetic longitude	the angle between the plane of the geodetic meridian and the plane of an initial meridian. A geodetic longitude can be measured by the angle at the pole of rotation of the reference spheroid between the local and initial meridians or by the arc of the geodetic equator intercepted by those meridians. In the US, geodetic longitudes are numbered from the meridian of Greenwich, but are computed from the meridian of station Meades Ranch as prescribed in NAD 27. A geodetic longitude differs from the corresponding astronomical longitude by the amount of the prime vertical component of the local deflection of the vertical divided by the cosine of the latitude
geodetic reference system	the technical name for a datum. The combination of an ellipsoid, which specifies the size and shape of the earth, and a base point from which the latitude and longitude of all other points are referenced
geodetic survey	a survey of a large land area in which corrections are made for the curvature of the earth's surface
geographic coordinates	an inclusive term that is generally used to designate both geodetic and astronomical coordinates
geoid	the surface within or around the earth that is everywhere normal to the direction of gravity and coincides with MSL in the oceans
GEOID93	Geoid reference model 1993
GEOID96	Geoid reference model 1996
GEOID99	Geoid reference model 1999
geoid height	the height of the geoid above the ellipsoid in use (this usually refers to the height of the geoid above the WGS-84 ellipsoid upon which GPS is based)

GEOREF	geographic reference
GIS	geographic information system
global positioning system	a system (developed by the US military) based on satellites and sophisticated receivers that are capable of accurately measuring the geodetic location of a receiver at any place in the world and is widely used in surveying and navigational situations
GPS	global positioning system
GPS-S	global positioning system-survey
gravimeter	a weighing device or instrument of sufficient sensitivity that is used to register variations in the weight of a constant mass when the mass is moved from place to place on the earth and thereby is subjected to the influence of gravity at those places
gravitation	the acceleration produced by the mutual attraction of two masses, directed along the line joining their centers of mass, and of magnitude inversely proportional to the square of the distance between the two centers of mass
gravity	viewed from a frame of reference freed in the earth (acceleration imparted by the earth to a mass), which is rotating the earth. Since the earth is rotating, the acceleration observed as gravity is the resultant of the acceleration of gravitation and the centrifugal acceleration arising from this rotation and the use of an earthbound rotating frame of reference.
ground-controlled approach	a radar approach system operated from the ground by ATC personnel transmitting instructions to the pilot by radio (the approach may be conducted with ASR and/or PAR)
GRS	geodetic reference system
GRS 80	Geodetic Reference System of 1980
GS	general support
GSI	glide-slope indicator
GSR	ground-surveillance radar
GySgt	gunnery sergeant
h	ellipsoidal height
h	hour(s)
H	orthometric height
HARN	high-accuracy reference network
H Dist	horizontal distance
HDOP	horizontal dilution of precision
height of instrument	in *spirit leveling*, it is the height of the line of sight of a leveling instrument above the adopted datum. In *stadia surveying*, it is the height of the center of the telescope (horizontal axis) of the transit or telescopic alidade above the ground or station mark. In *trigonometric leveling*, it is the height of the center of the theodolite (horizontal axis) above the ground or station mark
Hg	the symbol for the element mercury

HHB headquarters and headquarters battery

HHC headquarters and headquarters company

HI height of instrument

horizontal control a control point that determines horizontal positions only, with respect to parallels and meridians or to other lines of reference

horizontal refraction a natural error in surveying, which is the result of the horizontal bending of light rays between a target and an observing instrument. This error is usually caused by the differences in density of the air along the path of the light rays, resulting from temperature variations

HQ headquarters

ht height

HT height of the observed target

IEW intelligence and electronic warfare

IFR instrument flight rules

IID intermittently integrated Doppler

ILS instrument landing system

IM inner marker

imaginary surface any surface that is defined in FAR-77, subpart C. A *specified surface* is an imaginary surface (other than a supplemental surface) that is designated by appropriate FAA authorities for defining obstructions. This surface may or may not be the surface specified in FAR-77 for existing approach minimums. A supplemental surface is an imaginary surface designated by appropriate FAA authorities. A *supplemental surface* will normally lie below a specified surface and is intended to provide additional obstruction information. An object that penetrates a supplemental surface only is a supplemental obstruction

in inch(es)

INS inertial navigation system

inst instrument

instr instrument

instrument landing system a precision instrument approach system that normally consists of electronic components and visual aids (for example, localizer, glide slope, outer marker (OM), MM, and approach lights)

instrument runway a runway equipped with electronic and visual NAVAIDs

int initials

intersection method a method of determining the horizontal position of a point by observations from two or more points of known position, thus measuring directions that intersect at the station being located. A station whose horizontal position is located by intersection is known as an intersection station

ionospheric correction the ionosphere causes a delay in the propagation of a GPS signal that can be estimated with 50 percent accuracy using any recognized atmospheric model. On baselines shorter than 20 kilometers, it is mostly eliminated by relative positioning. For greater accuracy, it can be mostly eliminated by dual frequency observations and processing

isogonic chart a chart that features a system of isogonic lines, each for a different value of the magnetic declination

isogonic line a line drawn on a map or chart joining points of equal magnetic variation

ISVT initial site-visitation trip

JAG Judge Advocate General

Jan January

K a scale factor used to convert a measured distance to a grid distance

K★ a scale factor used to reduce a grid distance

KE correction to easting

km kilometer(s)

KN correction to northing

landing direction indicator a device that visually indicates the direction in which landings and takeoffs should be made

lat latitude

latitude the north/south component of the spherical coordinate system most widely used to record geodetic locations. Originally, when the earth was thought to be spherical, a degree of latitude represented one degree of arc on the surface of the earth, which is referenced to the center of the earth. Now that it is known that the earth is ellipsoidal in shape, there are several types of latitude. The usual definition of latitude is the angle a line, perpendicular to the surface of the ellipsoid, forms with the plane of the equator. This is also referred to as the geographic latitude or geodetic latitude. Whenever the unqualified term latitude is used, it is generally accepted that it refers to the geographic latitude. Normal conventions dictate that north latitudes be given in degrees where positive numbers indicate north latitudes and negative numbers indicate south latitudes

L-band frequency used by SVs to exchange information

LEC linear error of closure

level datum a level surface to which elevations are referred. The generally adopted level datum for leveling in the US is the MSL. For local surveys, an arbitrary level datum is often adopted and defined in terms of an assumed elevation for some physical BM

level net	Lines of spirit leveling connected together to form a system of loops or circuits extending over an area
line of sight	the straight line between two points (this line is in the direction of a great circle but does not follow the curvature of the earth); also, the line extending from an instrument along which distant objects are seen when viewed with a telescope or another sighting device
L/MF	low or medium frequency
localizer	the component of an ILS that provides course guidance to the runway
localizer back course	the course line defined by the localizer signal along the extended runway centerline in the opposite direction to the normal localizer approach course (front course)
localizer-type directional aid	a NAVAID used for nonprecision instrument approaches with utility and accuracy comparable to a localizer; however, it is not part of a complete ILS and is not aligned with the runway
lon	longitude
long	longitude
longitude	the east/west component of the spherical coordinate system most widely used to record geodetic locations. Lines of longitude are great circles/geodesics, which pass through the north and south pole, and intersect the equator. All lines of longitude proceed in a true north/south direction. The imaginary lines of longitude are assigned values that represent, in degrees of arc, the distance of the line from the prime meridian (the line of longitude that passes through Greenwich, England, is the most common prime meridian in use today)
long-range navigation	an electronic navigation system by which hyperbolic LOPs are determined by measuring the difference in the time of reception of synchronized pulse signals from two fixed transmitters. The long-range navigation (LORAN) A operates in the 1750- to 1950-kilohertz frequency band. The LORAN C and D operate in the 100- to 110-kilohertz frequency band
LOP	line of position
LORAN	long-range navigation
LRA	local reproduction authorized
LTC	lieutenant colonel
m	meter(s)
m	minute(s)
MACOM	major Army command
mag	magnetic
main-scheme station	a station through which the basic survey computations are carried, also called a principal station
Mar	March

marker beacon an electronic NAVAID transmitting a 75-megahertz vertical-fan or bone-shaped radiation pattern. Marker beacons are identified by their modulation frequency and keying code and, when received by compatible airborne equipment, indicate to the pilot (both aurally and visually) that he is passing over the facility. Marker beacons include the following:
Basic-control marker (BCM). When installed, this normally indicates the localizer basic-control final-approach fix where approach descent is commenced.
Inner marker (IM). A marker beacon (used with an ILS category-II precision approach) that is located between the MM and the end of the ILS runway. It also marks progress during an ILS category-III approach. The IM is usually located at the point of decision height for ILS category-II approaches.
MM. A marker beacon that defines a point along the glide slope of an ILS, usually located at or near the point of decision height for ILS category-I approaches.
OM. A marker beacon that is at or near the glide-slope intercept altitude of an ILS approach. The OM is normally located 4 to 7 miles from the runway threshold on the extended centerline of the runway

mean sea level the mean surface-water level that was determined by averaging heights at all stages of the tide over a 19-year period (often used as a reference for general leveling operations)

meas measurement

meridian in a cartographic/geodetic context, a meridian is a line of longitude

met meteorological

MET missile escort team

MFR memorandum for record

MGRS military grid-reference system

mi mile(s)

micro micrometer

MID E middle easting

MID N middle northing

mil a unit of angular measurement that is equal to 1/6400 of 360° and used especially in FA

min minute(s)

minimum weather condition requirements that are established for a particular operation or type of operation (for example, instrument flight rules (IFR) takeoff or landing, alternate airport for IFR flight plans, or visual flight rules (VFR) flight)

missed approach a maneuver that is conducted by a pilot when an instrument approach cannot be completed to landing

MLRS multiple-launch rocket system

MLS microwave landing system

mm millimeter(s)

MM middle marker

mn mean

mo month

MOA memorandum of agreement

Mon Monday

monument any object or collection of objects that indicate the position on the ground of a survey station. In military surveys, the term monument usually refers to a stone or concrete station marker containing a special bronze plate on which the exact station point is marked

MOS military occupational specialty

movement area the runways (exclusive of apron areas), taxiways, and other areas of an airport/heliport, which are used for taxiing, takeoff, and landing of aircraft. At airports/heliports with a tower, specific approval for entry onto the movement area must be obtained from ATC

MRSE mean radial spherical error

MSL mean sea level

MTP mission training plan

multipath errors errors caused when one or more reflected signals, interfering with the main signal because of their common time origin but different path lengths, are superimposed with their relative phase offsets on the primary signal at the receiver. Cyclic perturbations of the carrier are caused by this superimposition as the various signals undergo changes in their relative phase offsets as the geometric relation between the nearby and distant reflecting surfaces and the satellite and receiver changes

multistation reduction geodetic parameters that are estimated at more than two stations using simultaneous observations

n geoid height

N north

NA not applicable

NAD North American Datum

NAD 27 North American Datum of 1927

NAD 83 North American Datum of 1983

nadir the point of the celestial sphere that is directly opposite the zenith and vertically downward from the observer

NAS National Airspace System

National Flight Data Center a facility in Washington, District of Columbia, that was established by the FAA to operate a central aeronautical information service for the collection, validation, and dissemination of aeronautical data in support of the activities of the government, industry, and the aviation community. The information is published in the National Flight Data Digest (NFDD)

National Flight Data Digest	a daily (except weekends and Federal holidays) publication of flight information (appropriate to aeronautical charts or aeronautical publications) that provides operational flight data which is essential to safe and efficient aircraft operations
NATO	North Atlantic Treaty Organization
NAVAID	navigational aid
NAVAID survey	the process of determining the position and/or elevation of one or more NAVAIDs and adjunctive points on associated runways or extended runway centerlines. A NAVAID survey that is performed as part of the OC survey is called a combined NAVAID survey. A NAVAID survey that is not performed as part of a normal OC survey is called a special NAVAID survey
NAVD 88	North American Vertical Datum of 1988
navigable airspace	airspace at and above the minimum flight altitude that is prescribed in FARs, including airspace needed for safe takeoff and landing
navigational aid	any visual or electronic device, airborne or on the surface, which provides point-to-point guidance information or position data to aircraft in flight
NAVSTAR	Navigation Satellite Timing and Ranging
NBC	nuclear, biological, and chemical
NCAD	New Cumberland Army Depot
NCO	noncommissioned officer
NCOIC	noncommissioned officer in charge
NDB	nondirectional beacon
NE	northeast
NFDD	National Flight Data Digest
NGRS	National Geodetic Reference System
NGS	National Geodetic Survey
NGVD 29	National Geodetic Vertical Datum of 1929
NIMA	National Imagery and Mapping Agency
NL	notes and legends
No.	number
NOAA	National Oceanic and Atmospheric Administration
nondirectional beacon	an L/MF or UHF radio beacon transmitting nondirectional signals whereby the pilot of an aircraft that is equipped with direction-finding equipment can determine his bearing to or from the station. When the NDB is installed in conjunction with an ILS marker, it is normally called a compass locator
nonprecision approach procedure	a standard instrument-approach procedure in which no electronic glide slope is provided (for example, VOR, TACAN, NDB, localizer, ASR, and simplified directional facility [SDF] approaches)
North American Datum	the initial point of this datum is located at Meades Ranch, Kansas. Based on the Clarke spheroid of 1866, the geodetic positions of this system are derived from a readjustment of the triangulation of the entire country in which Laplace azimuths were introduced

Nov	November
NSATS	number of satellites
NSRS	National Spatial Reference System
NW	northwest
obs	observed
observer's meridian	a celestial meridian passing through the zenith (at the point of observation) and the celestial poles
obstruction	any object that penetrates a specified surface. An object that penetrates a supplemental surface is a supplemental obstruction. The most obstructing object in a set of objects is the one that penetrates an imaginary surface further than any other object in the set
OC	obstruction chart
occ	occupied
OCONUS	outside continental United States
Oct	October
ODALS	Omnidirectional Approach Light System
offset line	a supplementary line that is close to and roughly parallel with a main line (measured offsets). When a line for which data are desired is in such a position that it is difficult to measure over it, the required data are obtained by running an offset line in a convenient location and measuring offsets from it to salient points on the other line
OIS	obstruction identification surface
OM	outer marker
op	operator
open traverse	a survey traverse which begins from a station of known or adopted position but does not end upon such a station
OPORD	operation order
order of accuracy	a mathematical ration that defines the general accuracy of measurements made in a survey (for example, first, second, third, fourth, or lower order)
ortho	orthometric
orthometric height	another name for the elevation of an object (the height of an object above the geoid)
OTF	on the fly
OVM	organization vehicle maintenance
p	page(s)
PAC	Personnel and Administration Center
PACS	primary airport control station

PADS	Position and Azimuth Determination System
PAPI	precision approach-path indicator
PAR	precision approach radar
parallax	the apparent displacement or the difference in apparent direction of an object as seen from two different points not on a straight line with the object; also, the angular difference in direction of a celestial body as measured from two points on the earth's orbit
PBM	permanent benchmark
PC	personal computer
P-code	precision code
PDOP	positional dilution of precision
permanent benchmark	a BM of as nearly permanent character as it is practicable to establish. Usually designated simply as BM. A PBM is intended to maintain its elevation with reference to an adopted datum, without change, over a long period
PFC	private first class
pgdn	page down
pgs	pages
pgup	page up
picture point	a terrain feature that is easily identified on an aerial photograph and whose horizontal or vertical position or both have been determined by survey measurements. Picture points are marked on the aerial photographs by the surveyor and are used by the photomapper
PIR	precise instrument runway
PLASI	pulse-light approach-slope indicator
PLGR	precise lightweight GPS receiver
plumb line	the line of force in a geopotential field; the continuous curve to which the direction of gravity is everywhere tangential; or, the line indicated by a plumb-bob cord
PM	post meridian
PMCS	preventive-maintenance checks and services
POC	point of contact
POL	petroleum, oils, and lubricants
pos	position
POV	privately owned vehicle
ppm	part(s) per million
PPS	Precise Positioning Service
PRC	pseudorange correction
precise ephemeris	the precise ephemeris is the postprocessed position of a satellite in its orbit as a function of time. It is computed from data that are observed at tracking stations at fixed locations and is available from various global agencies

precision approach procedure a standard instrument-approach procedure in which an electronic glide slope is provided or used (for example, ILS and PAR approaches)

precision approach radar radar equipment usually located at military or joint-use airfields that detects and displays azimuth, elevation, and range of aircraft on the final approach course to a runway. The controller issues guidance to the pilot based on the aircraft's position and elevation relative to the touchdown point on the runway displayed on the radarscope

prime meridian the specific meridian (for example, line of longitude) that is assigned the value of zero and to which all other meridians are referenced. While Greenwich, England, is almost universally accepted as the prime meridian, several other meridians (such as the meridian of Paris) remain in use

prime vertical the vertical circle through the east and west points of the horizon. It may be true, magnetic, compass, or grid depending upon which east or west points are involved

PRN pseudorandom noise

pseudorange measurement a measurement obtained by comparing the time signal generated by the satellite clock to the time signal generated by the receiver clock to determine propagation time and, subsequently, the range

PVC polyvinyl chloride

PX post exchange

r degrees of freedom

R1 reject value, use first mean value

R2 reject value, use second mean value

radar a device for radio detection and ranging. Radar measures the time interval between transmitted and received radio pulses and provides information on the range, azimuth, and/or elevation of objects in the path of the transmitted pulse. A *primary radar* system uses reflected radio signals. A *secondary radar* system is a system wherein a radio signal that is transmitted from a radar station initiates the transmission of a radio signal from another station

radar approach an instrument-approach procedure that uses PAR or ASR

RC ratio of closure

RDOP relative dilution of precision

REIL runway end identifier light

rep repetition

right ascension the angular distance that is measured eastward on the equator from the vernal equinox to the hour circle through the celestial body, from 0 to 24 hours

RM reference mark

RMS root-mean-square

Ro	rejected by observation
RPP	runway plans and profiles
RT	relocated threshold
RTCM	Radio Technical Commission for Maritime
RTK	real-time kinematic
RTO	radio/telephone operator
runway	a defined rectangular area on a land airport that is prepared for the landing and takeoff run of aircraft along its length
RVR	runway visual range
RVV	runway visibility value
rwy	runway
s	seconds
S	south
S1	Adjutant (United States Army)
S3	Operations and Training Officer (United States Army)
S4	Supply Officer (United States Army)
S/A	selective availability
SACS	secondary airport control station
sampling interval (data rate)	the interval (in seconds) at which observations are logged to memory
SATO	Scheduled Airline Ticket Office
SC	special committee
SCP	survey control point
SDF	simplified directional facility
SDNCO	staff duty noncommissioned officer
SE	southeast
secs	seconds
Sep	September
SEP	spherical error probable
sexagesimal system	a system of notation by increments of 60 (the division of a circle into 360°, each degree into 60 minutes, and each minute into 60 seconds)
SFC	sergeant first class
SGT	sergeant
SIC	survey information center
SIF	stadia-interval factor
simplified directional facility	a NAVAID that is used for nonprecision instrument approaches. The final approach course is similar to that of an ILS localizer, except that the SDF course may not be aligned with the runway and the course may be wider, resulting in less precision
sin	sine
SINCGARS	Single-Channel Ground-to-Air Radio System

SLC	sea-level coefficient
SM	soldier's manual
software	GPS software is classified as data logging, postprocessing reduction, and real-time processing. Data-logging software relates to the operation of the receiver and is not field-tested. Postprocessing software should be tested using a BM data set
SOI	signal operation instructions
solar day	the interval of time from the transit of either the sun or the mean sun across a given meridian to the next successive transit of the same body across the same meridian; also, the duration of one rotation of the sun
solar time	time based upon the rotation of the earth relative to the sun; time on the sun
SOP	standing operating procedure
SPC	specialist
SPCE	survey planning and coordination element
SPCO	survey planning and coordinating officer
spheroid	any figure differing slightly from a sphere
SPHS	specially prepared hard surface
spirit leveling	spirit leveling follows the geoid and its associated level surfaces, which are irregular rather than any mathematically determined spheroid or ellipsoid and associated regular level surfaces
SPS	Standard Positioning Service
SSF	standard solution file
SSG	staff sergeant
SSGCN	Standards and Specifications for Geodetic Control Networks
SSI	standing signal instructions
ST	special text
sta	station
state-plane coordinate system	the meridian used as the axis of Y for computing projection tables for a state coordinate system (the CM of the system usually passes close to the center of the figure of the area or zone for which the tables are computed)
std	standard
stopway	an area beyond the takeoff runway that is at least as wide as the runway, is centered upon the extended runway centerline, is able to support an airplane during an aborted takeoff without causing structural damage to the airplane, and is designated by airport authorities for use in decelerating the airplane during an aborted takeoff. The location of threshold lights has no bearing on an area being designated as a stop way
STP	soldier training publication
sub	subtract
SV	satellite vehicle

t	grid azimuth
T	geodetic azimuths
TA	target acquisition
TAB	target-acquisition battery
TACAN	tactical air navigation
tactical air navigation	a UHF electronic rho-theta air NAVAID, which provides suitably equipped aircraft with a continuous indication of bearing and distance to the TACAN station
tan	tangent
target	any object or point toward which something is directed; also, an object which reflects a sufficient amount of a radiated signal to produce an echo signal on detection equipment
TBM	temporary benchmark
TCMD	transportation-control and movement document
TDY	temporary duty
TDZE	touchdown zone elevation
TEC	Topographic Engineering Center
TECHOPORD	technical operation order
tel	telescope
temp	temperature
TG	trainer's guide
thr	threshold
threshold	the beginning of that portion of the runway usable for landing. A *DT* is located at a point on the runway other than the designated beginning of the runway. The displaced area is available for takeoff or rollout of aircraft. The DT paint bar is entirely on the usable landing surface. A *relocated threshold* (RT) is located at a point on the runway other than the beginning of the full strength pavement. The area between the former threshold and the RT is not available for the landing or takeoff of aircraft. The abandoned runway area may or may not be available for taxiing
tidal benchmark	a BM set to reference a tide staff at a tidal station and the elevation that is determined with relation to the local tidal datum
tidal datum	specific tide levels, which are used as surfaces of reference for depth measurements in the sea and as a base for the determination of elevation on land. Many different datums have been used, particularly for leveling operations
TM	technical manual
TMP	transportation motor pool
TOD	tabulated operational data
TOE	table(s) of organization and equipment
topo	topographic
touchdown zone	the first 3,000 feet of the runway beginning at the threshold

touchdown zone elevation	the highest elevation in the touchdown zone. The OC program specifications require that the TDZE will be determined only for runways with SPHSs equal to, or greater than, 3,000 feet in length
TP	temporary point
TRADOC	United States Army Training and Doctrine Command
transit	the apparent passage of a star or another celestial body across a defined line of the celestial sphere, as a meridian, prime vertical, or almucantar; the apparent passage of a star or another celestial body across a line in the reticle of a telescope, or some line of sight; a theodolite with the telescope mounted so that it can be transited
transmissometer	an apparatus used to determine visibility by measuring the transmission of light through the atmosphere and is the measurement source for determining runway visual range (RVR) and runway visibility value (RVV)
trig list	an extremely or excessively precise list
tropospheric correction	the troposphere causes a propagation delay of a GPS signal. This delay can be estimated using any recognized atmospheric model and can be mostly eliminated by relative positioning for short lengths and modeled for longer baselines
UDS	user-defined sequence
UERE	user equivalent range error
UHF	ultrahigh frequency
universal transverse Mercator	a series of 120 coordinate systems that are based on the transverse Mercator projection that was originally developed by the US Army for a worldwide mapping project. Sixty zones are used to map the northern hemisphere, and the remaining zones apply to the southern hemisphere. Each zone is 6° wide and is numbered. Zone 1 covers longitudes of 180° W through 174° W. The remaining zones are numbered sequentially as they move east. All zones have their origin at the equator, use the meter as the system unit, and have a false easting of 500,000 meters and a false northing of 0. A scale reduction factor of 0.9996 is used on all zones. Zones for the southern hemisphere are identical to their northern counterpart except that the false northing is set to 10,000,000 to eliminate negative Y coordinates
UPS	universal polar stereographic
US	United States
USA	United States of America
USAADCENFB	United States Army Air Defense Center and Fort Bliss
USAASA	United States Army Aeronautical Services Agency
USACE	United States Army Corps of Engineers
USAES	United States Army Engineer School
USAF	United States Air Force

USAPA	United States Army Publishing Agency
USAPPC	United States Army Publications and Printing Command
USCG	United States Coast Guard
USC&GS	United States Coast and Geodetic Survey
USGS	United States Geological Survey
UTC	universal time, coordinated
UTM	universal transverse Mercator
VASI	visual-approach slope indicator
VDOP	vertical dilution of precision
vern	vernier
vernal equinox	that point of intersection of the ecliptic and the celestial equator, which is occupied by the sun as it changes from south to north declination on or about March 21 (same as the first of Aries, the first point of Aries, or the March equinox)
vert	vertical
vertical circle	a great circle of the celestial sphere (through the zenith and nadir) that is perpendicular to the horizon; also, a graduated disk (mounted on an instrument in such a manner that the plane of its graduated surface can be placed in a vertical plane), which is used primarily for measuring vertical angles in astronomical and geodetic work
vertical control	the measurements taken by surveying methods for the determination of elevation only with respect to an imaginary level surface, usually the MSL
vertical-control datum	any level surface (for example, the MSL) taken as a surface of reference from which to reckon elevations. Although a level surface is not a plane, the vertical-control datum is frequently referred to as the datum plane
very-high-frequency omnidirectional range	a VHF NAVAID, which provides suitably equipped aircraft with a continuous indication of bearing to the VOR station
very-high-frequency omnidirectional range and tactical air navigation	a navigational facility consisting of two components, a VOR and a TACAN, which provide VOR azimuth, TACAN azimuth, and TACAN distance
VFR	visual flight rules
VHF	very high frequency
VOR	very-high-frequency omnidirectional range
VORTAC	very-high-frequency omnidirectional range and tactical air navigation
W	west
WAAS	wide-area augmentation system
WDI	wind-direction instrument

WGS World Geodetic System

WGS 72 World Geodetic System 1972

WGS 84 World Geodetic System 1984

widelaning a linear combination of the measured phases of L1 and L2, based on the frequency difference. Widelane ambiguities can be resolved easier than L1 and L2 ambiguities, because the resulting 0.862-meter wavelength is much longer than the individual L1 and L2 wavelengths. Knowledge of the widelane ambiguity helps to solve the L1 ambiguity, after which a simple computation will give the L2 ambiguity

World Geodetic System 1984 a global datum that is based on electronic technology, which is still to some degree classified. Data on the relationship of as many as 65 different datums to WGS-84 is available to the public. As a result, WGS 84 is becoming the base datum for the processing and conversion of data from one datum to any other datum. GPS is based on this datum. The difference between WGS 84 and NAD 83 is small and is generally considered to be insignificant

XVIII the Table 18 value extracted from DMS ST 045

X, Y, and Z variables used to depict coordinates in the X, Y, and Z axis

Y-code the military's classified, encrypted precision code

yr year(s)

ZD zenith distance

zen zenith

zenith the point where an infinite extension of a plumb (vertical) line, at the observer's position, pierces the celestial sphere above the observer's head

zenith distance the complement of the altitude; the angular distance from the zenith of the celestial body measured along a vertical circle

Bibliography

AR 115-11. *Army Topography.* 30 November 1993.

AR 210-20. *Master Planning for Army Installations.* 30 July 1993.

AR 310-25. *Dictionary of United States Army Terms.* 15 October 1983.

AR 310-50. *Authorized Abbreviations and Brevity Codes.* 15 November 1985.

AR 380-5. *Department of the Army Information Security Program.* 25 February 1988.

AR 385-95. *Army Aviation Accident Prevention.* 10 December 1999.

AR 405-10. *Acquisition of Real Property and Interests Therein.* 14 May 1970.

AR 420-90. *Fire and Emergency Services.* 10 September 1997.

AR 95-1. *Flight Regulations.* 1 September 1997.

AR 95-2. *Air Traffic Control, Airspace, Airfields, Flight Activities, and Navigation Aids.* 10 August 1990.

DA Form 1900. *Conversion of Mean Time to Sidereal Time.* 1 February 1957.

DA Form 1901. *Conversion of Sidereal Time to Mean Time.* 1 February 1957.

DA Form 1902. *Conversion of Mean Time to Apparent Time.* 1 February 1957.

DA Form 1903. *Azimuth by Direction Method.* 1 February 1957.

DA Form 1905. *Azimuth by Hour Angle Method.* 1 February 1957.

DA Form 1907. *Azimuth by Altitude Method.* 1 February 1957.

DA Form 1909. *Longitude by the Altitude of Stars Near the Prime Vertical.* 1 October 1964.

DA Form 1911. *Altitude and Azimuth (Sin-Cos).* 1 February 1957.

DA Form 1914. *Computation of Base Line.* 1 February 1957.

DA Form 1915. *Abstract of Levels and Computation of Inclination Corrections.* 1 February 1957.

DA Form 1916. *Abstract of Horizontal Directions.* 1 February 1957.

DA Form 1917. *List of Directions.* 1 February 1957.

DA Form 1918. *Computation of Triangles.* 1 February 1957.

DA Form 1920. *Triangle Computation (for Calculating Machine).* 1 February 1957.

DA Form 1921. *Reduction to Center.* 1 February 1957.

DA Form 1922. *Position Computation, _____ Order Triangulation (Logarithmic).* 1 October 1964.

DA Form 1923. *Position Computation, _____ Order Triangulation (for Calculating Machine Computation).* 1 February 1957.

DA Form 1924. *Inverse Position Computation.* 1 February 1957.

DA Form 1925. *Quadrilateral Adjustment (Least Squares Method).* 1 February 1957.

DA Form 1927. *Latitude and Longitude Adjustment.* 1 February 1957.

DA Form 1930. *Special Angle Computation.* 1 February 1957.

DA Form 1931. *Traverse Computation (Geographic).* 1 February 1957.

DA Form 1932. *UTM Grid Coordinates From Geographic Coordinates.* 1 February 1957.

DA Form 1933. *Geographic Coordinates From UTM Grid Coordinates.* 1 February 1957.

DA Form 1934. *Grid Azimuths (t and T) and (t-T) Correction From UTM Grid Coordinates.* 1 February 1957.

DA Form 1935. *Grid Azimuth (t) and Grid Length.* 1 February 1957.

DA Form 1936. *List of Directions, UTM Grid.* 1 February 1957.

DA Form 1937. *Computation of Triangles (UTM Grid).* 1 February 1957.

DA Form 1938. *Position Computation (UTM Grid).* 1 February 1957.

DA Form 1939. *Reduction of Taped Distances.* 1 February 1957.

DA Form 1940. *Traverse Computation on the Universal Transverse Mercator Grid.* February 1957.

DA Form 1941. *Grid and Declination Computations.* 1 February 1957.

DA Form 1942. *Computation of Levels.* 1 February 1957.

DA Form 1943. *Abstract of Zenith Distances.* 1 February 1957.

DA Form 1944. *Computation of Elevations and Refractions From Reciprocal Observations (Logarithmic).* 1 February 1957.

DA Form 1945. *Computation of Elevations and Refractions From Reciprocal Observations (by Calculating Machine).* 1 February 1957.

DA Form 1947. *Computation of Elevations From Nonreciprocal Observations (by Calculating Machine).* 1 February 1957.

DA Form 1948. *Altimeter Leveling.* 1 February 1957.

DA Form 1949. *Corrected Altimeter Readings Prorated According to Time.* 1 February 1957.

DA Form 1953. *Universal Polar Stereographic Transformations.* 1 February 1957.

DA Form 1954. *Plane Coordinates From Geographic Coordinates on the Transverse Mercator Projection (Calculating Machine Computation).* 1 February 1957.

DA Form 1955. *Geographic Coordinates From Transverse Mercator Grid Coordinates (Calculating Machine Method).* 1 February 1957.

DA Form 1956. *Plane Coordinates From Geographic Coordinates on the Lambert Projection (Calculating Machine Computation).* 1 February 1957.

DA Form 1957. *Geographic Coordinates From Lambert Grid Coordinates (Calculating Machine Computation).* 1 February 1957.

DA Form 1958. *Description or Recovery of Benchmark.* 1 October 1964.

DA Form 1959. *Description or Recovery of Horizontal Control Station.* 1 October 1964.

DA Form 1962. *Tabulation of Geodetic Data.* 1 February 1957.

DA Form 201. *Military Personnel Records Jacket, US Army.* 1 August 1971.

DA Form 2028. *Recommended Changes to Publications and Blank Forms.* 1 February 1974.

DA Form 2404. *Equipment Inspection and Maintenance Worksheet.* 1 April 1979.

DA Form 2839. *Latitude From Zenith Distance of Polaris.* 1 October 1964.

DA Form 2847. *Comparison of Chronometer and Radio Signals.* 1 October 1964.

DA Form 2850. *Astronomic Results.* 1 October 1964.

DA Form 2854. *Electronic Distance Measurement Summary.* 1 October 1964.

DA Form 2855. *Geodimeter (Model 4) Observations and Computations.* 1 October 1964.

DA Form 2856. *Field Sheet, Tellurometer Data Entries (MRA3 MK11).* 1 October 1964.

DA Form 2857. *Field Sheet, Micro-Chain Data Entries.* 1 October 1964.

DA Form 348. *Equipment Operator's Qualification Record.* 1 October 1964.

DA Form 4253. *Horizontal Direction or Angle Book.* June 1974.

DA Form 4446. *Level, Transit, and General Survey Record.* November 1975.

DA Form 4648. *Station Description Book.* September 1977.

DA Form 4856. *Developmental Counseling Form.* June 1999.

DA Form 5817-R. *Zenith Distance/Vertical Angle (LRA).* August 1989.

DA Form 5818-R. *General Survey Notes (LRA).* August 1989.

DA Form 5819-R. *Field Sheet, Infrared (LRA).* August 1989.

DA Form 5820-R. *Three-Wire Leveling (LRA).* August 1989.

DA Form 5821-R. *Airfield Compilation Report (LRA).* August 1989.

DA Form 5822-R. *Precision Approach Radar (GCA) Data (LRA).* August 1989.

DA Form 5827-R. *Instrument Landing System Data (LRA).* August 1989.

DA Pamphlet 25-30. *Consolidated Index of Army Publications and Blank Forms.* 1 July 2000.

DA Pamphlet 310-35. *Index of International Standardization Agreements.* 15 December 1978.

DD Form 1351-2. *Travel Voucher or Subvoucher.* August 1997.

DD Form 1610. *Request and Authorization for TDY Travel of DOD Personnel.* 1 June 1967.

NOTE: These publications are available from DMS, Fort Belvoir, Virginia 22060-5828.

DMS Form 16-7. *Horizontal Directions/Zenith Distances.* 7 November 1975.

DMS Form 5820-R. *Collimation Check.* January 1997.

DMS ST 005. *Geometric Geodetic Accuracy Standards and Specifications for Using GPS Relative Positioning Techniques.* July 1997.

DMS ST 031. *Standards and Specifications for Geodetic Control Networks.* July 1997.

DMS ST 032. *Specifications to Support Classification, Standards of Accuracy, and Specifications of Geodetic Control Surveys.* October 1997.

DMS ST 045. *UTM Grid Tables - Clark 1866, Volumes I and II.* April 2000.

DMS ST 096. *Real-Time Kinematic with TrimMap™ Software Training Manual.* January 1997.

DMS ST 097. *GPSurvey™ Software 2.2 Training Manual.* January 1997.

DMS ST 648. *AISI (Automated Integrated Survey Instrument) Operations.* March 1998.

NOTE: These publications are available from the USACE Publication Depot, Attention: CEIM-IM-PD, 2803 52nd Avenue, Hyattsville, Maryland 20781-1102.

EM 1110-1-1002. *Survey Markers and Monumentations.* 14 September 1990.

EM 1110-1-1003. *NAVSTAR Global Positioning System Surveying.* 1 August 1996.

EM 1110-1-1005. *Topographic Surveying.* 31 August 1994.

NOTE: These publications are available from the US Department of Transportation, FAA, 800 Independence Avenue, Southwest, Washington, District of Columbia 20591.

FAA 405. *Standards for Aeronautical Surveys and Related Products, Fourth Edition.* September 1996.

FAA-7350.5-V. *FAA Location Identifiers.* February 1989.

FAR-77. *Objects Affecting Navigable Airspace.* 15 July 1996.

FM 101-5. *Staff Organization and Operations.* 31 May 1997.

FM 101-5-1. *Operational Terms and Graphics.* 30 September 1997.

FM 21-26. *Map Reading and Land Navigation.* 7 May 1993.

FM 21-31. *Topographic Symbols.* 19 June 1961.

FM 24-1. *Signal Support in the Airland Battle.* 15 October 1990.

FM 5-105. *Topographic Operations.* To be published within six months.

FM 5-233. *Construction Surveying.* 4 January 1985.

FM 5-553. *General Drafting.* 6 January 1984.

FM 55-10. *Movement Control.* 9 February 1999.

FM 6-2. *Tactics, Techniques, and Procedures for Field Artillery Survey.* 23 September 1993.

Glossary of Mapping, Charting, and Geodetic Terms (Fourth Edition, 1981). Prepared by DMA, Hydrographic/Topographic Center, 6500 Brookes Lane, Washington, District of Columbia 20315. 1981.

NFDD. Prepared by NIMA, Hydrographic/Topographic Center, 6500 Brookes Lane, Washington, DC 20315.

STP 5-82D14-SM-TG. *Soldier's Manual and Trainer's Guide: 82D, Topographic Surveyor (Skill Level 1/2/3/4).* 3 May 1985.

TM 5-232. *Elements of Surveying.* 1 June 1971.

TM 5-235. *Special Surveys.* 18 September 1964.

TM 5-237. *Surveying Computer's Manual.* 30 October 1964.

TM 5-6675-230-15. *Operator's, Organizational, Field and Depot Maintenance Manual: Level, Surveying: Precise Tilting; 3-Level Screws, Electric Illumination, 10-Inch Telescope (Military Model 10-X) with Tripod.* 6 June 1962.

TM 5-6675-239-15. *Organizational, Direct Support, General Support, and Depot Maintenance Manual Including Repair Parts for Light, Signal, Surveying; 5-Inch Diameter Reflector; Grille Housing; in Carrying Case (Military Design).* 15 June 1965.

TM 5-6675-244-15. *Organizational, Direct Support, General Support, and Depot Maintenance Manual (Including Repair Parts and Special Tools List); Target Set, Surveying, Circular Level and Optical Plummet in Tribrach with Quick Release Mechanism (Wild Heerbrugg Model T-2).* 12 April 1966.

TM 5-6675-298-15. *Operator, Organizational, Direct Support, General Support, and Depot Maintenance Manual: Theodolite, Surveying: Directional, 0.002 Mil Graduation with Extension Leg Tripod (Keuffel and Esser Model KE-2 Special).* 16 September 1968.

TM 5-6675-306-14. *Operator's, Organizational, Direct Support, and General Support Maintenance Manual: Theodolite, Directional; 1-Second Graduation, 5.9-Inch-Long Telescope, Detachable Tribrach with Accessories and Tripod (Wild Heerbrugg Model T2-74 Deg)., 9-Inch Long Telescope, Detachable Tribrach with Accessories and Tripod (Wild Heerbrugg Model T2-74 Deg).* 23 July 1975.

TM 5-6675-318-114-1/2. *Operator's, Organizational, Direct Support, and General Support Maintenance Manual for Topographic Support System, Survey Section, Model ADC-TSS-6.* 3 September 1985.

TM 5-6675-329-13&P-HR. *Hand Receipt Manual Covering Contents of Components of End Item (COEIs), Basic Issue Items (BII), and Additional Authorizations List (AAL) for Self-Leveling Surveying Level (Wild Heerbrugg Model NA 2-80).* 9 November 1983.

TM 5-6675-332-10. *Operator's Manual for Automated Integrated Survey Instrument (AISI) Type I Topographic, Part Number 571146150, Type II Construction, Part Number 571146152 Operators Manual, Automated Integrated Survey Instrument (AISI), Type I, Topographic.* 30 June 1994.

TM 5-803-7. *Civil Engineering Programming: Airfield and Heliport Planning and Design Criteria.* 1 April 1999.

TOE 05540LA00. *Topographic Planning and Control Team.* June 1998.

TOE 05606L000. *Headquarters, and Headquarters Company, Engineer Battalion (Topographic) Theater Army.* June 1998.

TOE 05607L0. *Engineer Company (Topographic) (EAC), Engineer Battalion (Topographic).* 1998.

TOE 05608L0000. *Engineer Company (Topographic) (Corps).* June 1998.

Index

Numerics

1D, *see* one dimensional (1D)
2D, *see* two dimensional (2D)
3D, *see* three dimensional (3D)

A

absolute positioning 1-4, 8-1, 8-2, 8-5, 8-14
abstract 5-8, 5-10
accuracy 1-3, 1-5, 8-18, 8-20, 8-24, 8-27, 8-31, 8-36, 8-38, 8-41, 8-43, 8-45–47, 8-54–56, 8-61, 8-62, 8-67, 8-68, 9-1, 9-3, 10-7, B-10, B-12, B-14, B-16, B-17
    external 8-56, 8-57
    internal 8-56, 8-57
    relative 8-20, 8-60, 8-66
ADA, *see* air-defense artillery (ADA)
adjustment 6-8
Adjutant General (AG) 2-5, 2-6
administrative-recon trip 2-9
AE, *see* allowable error (AE)
AEC, *see* angular error of closure (AEC)
aerial photographs 3-5
AG, *see* Adjutant General (AG)
air-defense artillery (ADA) 1-1, 1-3, 1-9, 9-1, 9-2, 9-4
airfield surveys 1-2
airport imaginary surface 10-5
airport location point (ALP) 10-10
airport obstruction chart (AOC) 1-2, 10-1, 10-2, 10-9. *See also* survey, AOC
airport reference point (ARP) 10-3, 10-7, 10-9, 10-10
airport surveillance radar (ASR) 10-2
AISI, *see* automated integrated survey instrument (AISI)
allowable error (AE) 1-15, 6-5, 6-7, 7-9, C-12, C-20, C-29
ALP, *see* airport location point (ALP)
ambiguity 8-39
American Society of Photogrammetry and Remote Sensing (ASPRS) 8-20
American Standard Code for Information Interchange (ASCII) 5-31
angle 1-12, 5-1, 5-2, 5-8, 6-2, 6-4, 6-5
    deflection 5-1
    interior 5-1
    vertical 5-1, 8-25
angular error of closure (AEC) 6-4, 6-5, C-11, C-12
antispoofing (AS) 8-2, 8-6, 8-8, 8-19, 8-45
AO, *see* area of operation (AO)
AOC, *see* airport obstruction chart (AOC)
approach/departure-clearance surface 10-5
area files 5-28
area of operation (AO) 1-3, 2-7, 9-2, 9-3
Army 1-5
Army Training and Evaluation Program (ARTEP) 2-2
ARP, *see* airport reference point (ARP)
ARTEP, *see* Army Training and Evaluation Program (ARTEP)
artillery surveys 1-6
AS, *see* antispoofing (AS)
ASCII, *see* American Standard Code for Information Interchange (ASCII)
ASPRS, *see* American Society of Photogrammetry and Remote Sensing (ASPRS)
ASR, *see* airport surveillance radar (ASR)
atmospheric conditions 2-7
automated integrated survey instrument (AISI) 1-4, 1-8, 5-6, 5-10, 5-13, 5-15, 5-24, 5-25, 5-28–30, 6-1
    batteries 5-30
    maintenance 5-29
    transporting 5-29
azimuth 8-25, 8-27, 8-29
azimuth mark 3-11, 3-15, 6-1

B

baseline B-8
basic-control surveys 1-6
batteries 2-7
benchmark (BM) 1-6, 1-13, 3-4, 3-6, 7-2, 7-5, 7-6, 8-17, 8-66, 11-31, C-28, C-29
BM, *see* benchmark (BM)
briefing 11-1, 11-8
    deliberate 11-8
        decision 11-9
        information 11-8
        mission 11-9
        staff 11-10
    impromptu 11-8
    procedure 11-11
    project 11-15
broadcast-ephemeris information 8-32

C

C/A-code, *see* coarse-acquisition code (C/A-code)
C&R, *see* curvature and refraction (C&R)
CAD, *see* computer-aided design (CAD)
CADD, *see* computer-aided design and drafting (CADD)
carrier signals 8-19. *See also* L-band
Cartesian coordinates 8-68
C-check, *see* collimation test for leveling (C-check)
central meridian (CM) 4-3, 5-14
CEP, *see* circular error probable (CEP)
C-factor, *see* collimation error (C-factor)
circular error probable (CEP) 8-12, 8-14
clear-zone surface 10-5
closed loop 5-1

CM, *see* central meridian (CM)
coarse-acquisition code (C/A-code) 8-3–5, 8-19, 8-37, 8-46–48, B-12, B-13
code phase 8-30
collimation error (C-factor) 7-2, 7-5, 7-8, 7-9, C-24
collimation test for leveling (C-check) 7-2, 7-4, 7-5, 7-9
communication 1-17, 3-16, 5-29, 8-38
computer-aided design (CAD) 1-9, 1-10, 5-24, 5-30
computer-aided design and drafting (CADD) 1-9
conical surface 10-4
construction surveyors 1-3
construction surveys 1-6. *See also* survey
continental US (CONUS) 1-7, 8-21, 8-27, 10-7
control network 2-3
control segment 8-3
control survey 5-1. *See also* survey
CONUS, *see* continental US (CONUS)
coordinate systems 4-6
  geographic coordinates 4-7
  high-accuracy reference networks 4-9
  NAD 27 4-8
  NAD 83 4-8
  National Geodetic Reference System 4-9
  US Military Grid-Reference System 4-6
  UTM grids 4-6
  WGS-84 ellipsoid 4-8
  World GEOREF System 4-7
Corps Conversion (Corpscon) 4-10, 8-21
Corpscon, *see* Corps Conversion (Corpscon)
curvature and refraction (C&R) C-27
customer 2-1
cycle slips 8-18, 8-50

D

data recording unit (DRU) 5-24, 5-28
datum 4-1, 7-1, 8-21, 8-57, 8-68, 10-10, B-10, B-14
DE, *see* difference in elevation (DE)
Defense Mapping School (DMS) 1-5
Department of Defense (DOD) 1-5, 8-1, 8-2, 8-4–6
DGPS, *see* Differential GPS. *See also* Global Positioning System (GPS)
difference in elevation (DE) 1-13, 5-13, 7-4, 7-5, C-28, C-29
difference in the horizontal aim 5-25
difference in the vertical aim 5-25
Differential Global Positioning System (DGPS), *see* Differential GPS (DGPS)
Differential GPS (DGPS) 1-4, 1-9, 4-8, 8-2, 8-18, 8-19, 8-35,8-66, B-6, B-13. *See also* Global Positioning System (GPS)
differential leveling 3-2, 7-1, 7-4–6
  field party 7-6
  recording 7-6
  steps 7-5
differential positioning 1-4, 8-2, 8-14, 8-15. *See also* relative positioning
dilution of precision (DOP) 8-6, 8-9, 8-10, B-11
distance measuring equipment (DME) 1-4
DIVARTY, *see* division artillery (DIVARTY)
division artillery (DIVARTY) 9-1, 9-2, 9-4
DME, *see* distance measuring equipment (DME)
DMS, *see* Defense Mapping School (DMS)
DOD, *see* Department of Defense (DOD)
DOP, *see* dilution of precision (DOP)
Doppler 8-48
DRU, *see* data recording unit (DRU)
dynamic 8-1
dynamic surveying 1-9

E

EAC, *see* echelons above corps (EAC)
earth centered earth fixed (ECEF) 4-8, 8-21
earth's curvature 5-14
ECEF, *see* earth centered earth fixed (ECEF)
echelons above corps (EAC) 9-1, 9-2, 9-4
EDM, *see* electronic distance measurement (EDM)
EDM traverse 8-60. *See also* electronic distance measurement (EDM)
EDME, *see* electronic DME. *See also* electronic distance measurement (EDM) *and* distance measuring equipment (DME)
electronic distance measurement (EDM) 1-16, 1-17, 5-13, 8-1, 8-42, 8-58, 8-59, 8-62
electronic distance measuring equipment (EDME) 1-8, 1-9, 3-2, 5-13, 5-15, 6-1, 6-3, 8-27, 11-32, 11-33. *See also* electronic distance measurement (EDM) *and* distance measuring equipment (DME)
electronic DME (EDME), *see* electronic distance measuring equipment (EDME)
ellipsoid 4-1, 4-2, 8-13, 8-53, 8-65, C-4
ellipsoidal height 8-17, 8-18, B-9, B-17
ephemerides 8-4, 8-5
ephemeris 8-7, 8-37, 8-47, 8-50
  data 8-32
  errors 8-47
error sources 8-18
existing control 8-24, 8-27
existing control stations 3-4
existing data 3-3. *See also* recon, office

F

FA, *see* field artillery (FA)
FA surveyors 1-6
FAA 405 10-2, 10-7–10
FAA, *see* Federal Aviation Administration (FAA)
FAO, *see* finance accounting office (FAO)
FAR-77 10-2, 10-5, 10-8, 10-9

Federal Aviation Administration (FAA) 1-7, 10-1, 10-10
Federal Geodetic Control Committee (FGCC) 2-3, 7-2, 7-5, 7-6
Federal Geodetic Control Subcommittee (FGCS) 8-24, 8-27, 8-28, 8-56, 8-66, 8-67, 9-1
FGCC, *see* Federal Geodetic Control Committee (FGCC)
FGCS, *see* Federal Geodetic Control Subcommittee (FGCS)
field artillery (FA) 1-1, 1-3, 1-9, 1-13, 3-3, 9-1, 9-2, 9-4
field notes 1-14, 1-17
  abbreviations 1-15
  checks 1-17
  corrections 1-15
  description 1-15
  records 1-17
  sketches 1-14
  symbols 1-15
  tabulations 1-14
field survey 1-3
finance accounting office (FAO) 2-5, 2-6, 11-20
fire support (FS) 9-3
fire-support coordinator (FSCOORD) 9-3
first-order geodetic triangulation 1-7
fixed control 8-29
FO, *see* forward observers (FO)
forward observer (FO) 9-2
fragmentary order (FRAGO) 11-13, 11-15, 11-27
FRAGO, *see* fragmentary order (FRAGO)
FS, *see* fire support (FS)
FSCOORD, *see* fire-support coordinator (FSCOORD)

G

G2 9-3
G3 9-2, 9-3
GCA, *see* ground-controlled approach (GCA)
GDOP, *see* geometric DOP
general support (GS) 1-1, 2-6, 9-1
geodetic surveys 1-4
geographic coordinates 4-7
geographic information system (GIS) 8-37
geoid 1-3, 4-1, 8-17, 8-53, 8-66, B-9, B-16, B-17
geoid height 8-18, B-16
geoidal separation 8-21
geometric DOP (GDOP) 8-10, 8-19, B-11. *See also* dilution of precision (DOP)
GIS, *see* geographic information system (GIS)
Global Positioning System (GPS) 1-1, 1-4, 1-6, 1-7, 1-10–12, 1-16, 1-18, 3-1, 3-4, 3-5, 4-8, 8-1, 8-3–10, 8-13, 8-14, 8-16–18, 8-20, 8-24, 8-28, 8-39, 8-42, 8-46, 8-51, 8-53, 8-55, 8-62, 8-65, 8-66, 10-7, 11-21, 11-28, B-5, B-6, B-10, B-11, B-13, B-17
  accuracy 8-10
  adjustment 8-54, 8-55, 8-58–60, 8-65, 8-66
    constrained 8-61, 8-66, 8-68
    external 8-59
    internal 8-58
  antenna-swap calibration 8-43
  baseline 8-24
  control 8-28
  data 8-17, 8-36, 8-38, 8-40, 8-44, 8-61, 11-21, B-15
    archival 8-54
    processing 8-44, 8-45, 8-49
    reduction 8-41
  data processing 8-45
  DGPS correction 8-38
  double differencing 8-48, 8-49, 8-50
  epoch 8-48, 8-50, 8-51
  equipment requirements 8-31
  error measurement 8-54
  errors 8-10, 8-19
  lock, loss of 8-44
  network 1-9, 8-21, 8-28, 8-31
  network design B-6
  observation 8-28
  observation window 8-40
  occupation time 8-40
  planning 8-21
  point positioning 8-36
  positioning 8-5
  postprocessing 8-51 8-53
  procedures 8-35
  processing 8-48
  range accuracy 8-9
  raw data 8-54
  receiver 1-5, 8-1, 8-2, 8-7
  redundancy B-8
  repeatability 8-51
  satellite 8-2, 8-3, 8-7, 8-27
  satellite lock 8-42
  sessions 3-1
  signal 8-2, 8-7, 8-8, 8-25, 8-47
  single differencing 8-48
  site constraints 8-43. *See also* GPS, site selection
  site selection 8-43
  software 8-35
  survey 1-9
  surveying 1-18, 3-1, 3-6
  traversing 8-28
  triple differencing 8-49, 8-50
GPS, *see* Global Positioning System (GPS)
GPS-S, *see* GPS-Survey (GPS-S). *See also* Global Positioning System (GPS)
GPS-Survey (GPS-S) 1-4, 5-30, 8-11, 8-20, 8-22, 8-23, 8-27, 8-31, 8-32, 8-35, 8-44, 8-47, 8-55–61, 8-63, 8-68, 9-2, B-6, B-9, B-10, B-14. *See also* Global Positioning System (GPS)
gravity 5-14
grid system 4-6
grids 4-3
ground-controlled approach (GCA) 10-10
GRS 80 8-21
GS, *see* general support (GS)

H

HARNs, *see* high-accuracy reference networks (HARNs)
HDOP, *see* horizontal DOP (HDOP)
heliport 10-5
  approach surface 10-5
  primary surface 10-5
heliport transitional surface 10-5
high-accuracy reference networks (HARNs) 4-9, 8-24
horizontal control 8-66
horizontal DOP (HDOP). *See also* dilution of precision (DOP) 8-11, 8-19

hydrographic surveys 1-6, 1-7

I

IEW, *see* intelligence and electronic warfare (IEW)
ILS, *see* instrument landing system (ILS)
Inertial Navigation System (INS) 1-2
inertial surveys 1-7
initial site-visitation trip (ISVT) 2-8, 2-9, 11-13, 11-14, 11-22
inner horizontal surface 10-3, 10-5
INS, *see* Inertial Navigation System (INS)
inspection surveys 1-7
instrument landing system (ILS) 10-2, 10-10
intelligence and electronic warfare (IEW) 9-3
ISVT, *see* initial site-visitation trip (ISVT)

J

JAG, *see* Judge Advocate General (JAG)
job files 5-28
joint-level commands 1-5
Judge Advocate General (JAG) 3-7, 11-4

K

kinematic 8-1, 8-2, 8-15–17, 8-21, 8-24, 8-26–28, 8-39, 8-43, 8-44, B-5, B-11, B-13. *See also* dynamic
kinematic, stop-and-go 8-15, 8-16, 8-39, 8-42, 8-45, B-5, B-12, B-13

L

L1 signal 8-3, 8-4, 8-8, 8-15, 8-19, 8-44, 8-46, B-12, B-15
L2 signal 8-3, 8-4, 8-8, 8-15, 8-19, 8-45, B-12, B-15
land surveys 1-7
landowner permission 3-7
L-band 8-3
LEC, *see* linear error of closure (LEC)
level line 3-4, 11-21, 11-28
leveling 7-1, 8-68, 11-32, B-1, B-9, B-16, B-17
    automatic 7-1
    differential 8-68, B-1
    digital 7-1
    optical-micrometer 7-2
    precision 7-2
    rod 7-2
    trigonometric 8-68
line of position (LOP) 3-6
linear error of closure (LEC) 6-7, C-20
logistics 2-6
loop
    closure 8-51, 8-53. *See also* traverse closure
    misclosure 8-60, 8-68
    misclosure ratio 8-53
LOP, *see* line of position (LOP)

M

MACOM, *see* Major Army Command (MACOM)
Major Army Command (MACOM) 2-5, 2-6, 11-14
map 3-3, 3-5, 4-3, 5-1, 8-25, 9-2, 10-10, 11-5
    geographic-mapping point 8-36
    projection 4-1, 4-3
    topographic 8-17, 8-32, 11-31
    US military 4-3, 4-7
mean sea level (MSL) 1-3, 4-1, 4-9, 7-1, 8-17, 8-18, B-6, B-9
megahertz 8-3
meridians 4-3
MGRS, *see* US Military Grid-Reference System (MGRS)
microwave landing system (MLS) 10-2
Military Grid-Reference System (MGRS) 4-6
minimally constrained adjustment B-16, B-17
MLRS, *see* multiple-launch rocket-system (MLRS)
MLS, *see* microwave landing system (MLS)
monument 3-5
    commercial 3-11
    guard post 3-12
    nonstandard 3-12
    precast 3-9
    reference mark (RM) 3-11
    standard 3-8
    subsurface station marks 3-8
    surface station marks 3-8
    type A 3-9
    type C 3-9
    type G 3-9
    witness post 3-12
MSL, *see* mean sea level (MSL)
multipath 8-8
multiple-launch rocket system (MLRS) 1-1, 9-1, 9-2, 9-6

N

NAD 27 1-7, 4-8–10, 8-14, 8-21, 8-24, 8-57
NAD 83 1-7, 4-8–10, 8-14, 8-21, 8-24, 8-55, 8-59, 8-61, 10-7
nadir 5-1
NAS, *see* National Airspace System (NAS)
National Airspace System (NAS) 1-2
National Geodetic Reference System (NGRS) 4-9, 8-22, 8-23, 8-25, 8-27, 8-29, 8-55, 8-56, 8-58, 8-59, 8-61
National Geodetic Survey (NGS) 3-3, 4-9, 8-5, 8-61, 8-66, 8-67, 11-14, B-6
National Imagery and Mapping Agency (NIMA) 1-1–3, 1-9, 3-8, 4-1, 4-10, 8-37, 9-2, 11-14
National Ocean Service (NOS) 8-24
National Oceanic and Atmospheric Administration (NOAA) 11-14
National Spatial Reference System (NSRS) 1-2, 10-1
NAVAID, *see* navigational aid (NAVAID)
NAVD 88 4-9, 10-7
Navigation Satellite Timing and Ranging (NAVSTAR) 1-1, 1-6, 1-8, 8-1–4, 8-14
Navigation Satellite Timing and Ranging Global Positioning System (NAVSTAR GPS) 1-1, 1-4, 1-8, 8-1, 8-2, 8-4, 8-14
navigational aid (NAVAID) 1-2, 10-1, 10-2, 10-9, 11-22, 11-26, 11-28
    surveys 1-6

NAVSTAR, *see* Navigation Satellite Timing and Ranging (NAVSTAR)
NAVSTAR GPS, *see* Navigation Satellite Timing and Ranging Global Positioning System (NAVSTAR GPS)
NCOIC, *see* noncommissioned officer in charge (NCOIC)
NDB, *see* nondirectional beacon (NDB)
network 1-7
  auxiliary vertical-control 1-8
  basic horizontal-control 1-7
  basic vertical-control 1-8
  horizontal auxiliary-control 1-8
  supplementary horizontal-control 1-8
  supplementary vertical-control 1-8
networks 3-4
new station 3-5
NGRS, *see* National Geodetic Reference System (NGRS)
NGS, *see* National Geodetic Survey (NGS)
NGS control 8-24
NGVD 29 1-7, 4-9
NIMA, *see* National Imagery and Mapping Agency (NIMA)
NOAA, *see* National Oceanic and Atmospheric Administration (NOAA)
noncommissioned officer in charge (NCOIC) 2-1
nondirectional beacon (NDB) 10-2
NOS, *see* National Ocean Service (NOS)
NSRS, *see* National Spatial Reference System (NSRS)

O

observation precautions 5-3
  instrument adjustment 5-3
  instrument check 5-3
  signal and target centering 5-3
obstruction chart (OC) 10-9
obstruction identification surface (OIS) 10-2
OC, *see* obstruction chart (OC)
OCONUS, *see* outside CONUS (OCONUS)
office work 1-15
  adjusting 1-16
  computing 1-15
OIS, *see* obstruction identification surface (OIS)
one dimensional (1D) 8-11
on the fly/real-time kinematic (OTF/RTK) 8-15, 8-16, 8-39, 8-45, B-5, B-13
operation order (OPORD) 11-1, 11-15, 11-26, 11-30
Operations and Training Officer 1-3
OPORD, *see* operation order (OPORD)
orthometric height 8-17, 8-18, B-1, B-6, B-17
OTF/RTK, *see* on the fly/real-time kinematic (OTF/RTK)
outer horizontal surface 10-4, 10-5
outside CONUS (OCONUS) 8-21, 8-59

P

PAC, *see* Personnel and Administration Center (PAC)
PADS, *see* Position and Azimuth Determination System (PADS)
PAR, *see* precision approach radar (PAR)
parallels 4-3
PBM, *see* permanent BM (PBM)
PC, *see* personal computer (PC)
P-code, *see* precision code (P-code)
PDOP, *see* positional DOP (PDOP)
permanent BM (PBM) 1-8. *See also* benchmark (BM)
permanent monument 3-5
personal computer (PC) 1-8–10, 1-15, 5-28, 5-30, 7-1, 8-31, 8-40, 8-41, 8-43, 8-46, 8-61, 8-63
Personnel and Administration Center (PAC) 2-5, 2-6
PIR, *see* precise-instrument runway (PIR)
plane survey 1-4, 1-6
plotter 5-31
POC, *see* point of contact (POC)
point of contact (POC) 11-4, 11-7, 11-23, 11-26
Position and Azimuth Determination System (PADS) 1-7, 1-12, 3-2, 9-4
positional DOP (PDOP) 8-10, 8-19, 8-32, B-11, B-13. *See also* dilution of precision (DOP)
postprocessing 8-46
PPS, *see* Precise Positioning Service (PPS)
PRC, *see* pseudorange correction (PRC)
Precise Positioning Service (PPS) 1-4, 1-8, 8-2, 8-4, 8-5, 8-36
precise instrument runway (PIR) 10-10
precision approach radar (PAR) 10-2, 10-10
precision code (P-code) 8-2–5, 8-8, 8-9, 8-19, 8-37, 8-47, 8-48, B-12
primary surface 10-4, 10-5
PRN, *see* pseudorandom noise (PRN)
project completion 2-6
project control 8-23
project execution 2-9
project planning 2-1, 2-9
  accuracy 2-3
  administrative support 2-5
  communication 2-6
  deploys 2-5
  evaluation 2-1
  initial site-visitation trip 2-8
  logistics 2-6
  milestones 2-3
  movement plans 2-6
  project schedules 2-4
  project-visitation trip 2-9
  requirements 2-1
  scheduling 2-1
  timeline 2-3
project specifications 8-27
projection 4-1, 4-3
  map 4-1
  Mercator 4-3
project-visitation trip 2-9
pseudokinematic 8-15, 8-16, 8-28, 8-39, 8-44, B-5, B-13
pseudorandom noise (PRN) 1-5, 8-1, 8-3, 8-39
pseudorange 8-4–6, 8-14, 8-18, 8-19, 8-47, B-5
pseudorange correction (PRC) 8-14, 8-37, 8-38

R

Radio Technical Commission for Maritime (RTCM) 8-37, 8-38
rapid static 8-15, 8-16, 8-39, 8-45, B-5, B-10, B-12, B-13. *See also* survey
ratio of closure (RC) 6-7, C-20
RC, *see* ratio of closure (RC)
RDOP, *see* relative DOP (RDOP). *See also* dilution of precision (DOP)
real time 8-2, 8-4, 8-11
real-time kinematic (RTK) 1-18, 8-15, 8-16, 8-39, 8-45, B-5, B-11–13
recon 2-8, 3-1, 3-2, 6-4, 7-5, 11-31
  communication 3-16
  description and sketch 3-12
  field 3-4
  monumentation 3-8
  office 3-3
  party 3-2
  report 3-16, 11-3
  requirements 3-1
  station description and sketch 3-12
  transportation 3-16
recording 5-6
reference mark (RM) 3-5, 3-11, 3-12
reference stake 6-4. *See also* reference mark (RM)
relative DOP (RDOP) 8-19, 8-50. *See also* dilution of precision (DOP)
relative positioning 8-30. *See also* differential positioning
report 10-8, 10-10, 11-1, 11-8
  end-of-project 11-6, 11-13, 11-30
  incident 11-7
  initial site-visitation trip (ISVT) 11-2
  ISVT 11-3, 11-7, 11-15. *See also* initial site-visitation trip (ISVT)
  percentage-of-project-completion 11-13
  progress 11-6
  recon 11-3, 11-7, 11-17
RM, *see* reference mark (RM)
RMS, *see* root-mean-square (RMS)
root-mean-square (RMS) 8-12, 8-13, 8-49, 8-50
RTCM, *see* Radio Technical Commission for Maritime (RTCM)
RTK, *see* real-time kinematic (RTK)
runway 10-2, 10-4, 10-5, 10-9

S

S/A, *see* selective availability (S/A)
S1 11-17, 11-20
S3 9-2, 9-3, 11-8, 11-14, 11-15, 11-26
S4 11-17
satellite
  elevation B-11
  sky plot 8-32
  survey 1-6
satellite vehicle (SV) 8-36
SCP, *see* survey control point (SCP)
sea level coefficient (SLC) 6-7, C-15
selective availability (S/A) 8-2, 8-5, 8-6, 8-8, 8-36
SEP, *see* spherical error probable (SEP)
session designation 8-33
SIC, *see* survey information center (SIC)
SIF, *see* stadia-interval factor (SIF)
signal. *See also* target; traverse 5-21, 6-4
SLC, *see* sea level coefficient (SLC)
software 8-37, 8-46, 8-54, 8-55, 8-61, 8-63, B-10, B-16
  traverse 8-53
SOP, *see* standing operating procedure (SOP)
space segment 8-2
SPCE, *see* survey planning and coordination element (SPCE)
SPCO, *see* survey planning and coordinating officer (SPCO)
specially prepared hard surface (SPHS) 10-9
spherical error probable (SEP) 8-11, 8-13
spheroid 1-3
SPHS, *see* specially prepared hard surface (SPHS)
SPS, *see* Standard Positioning Service (SPS)
spur shot 8-30
SSGCN, *see* Standards and Specifications for Geodetic Control Networks (SSGCN)
stadia-interval factor (SIF) 7-8, 7-9
Standard Positioning Service (SPS) 1-4, 8-2, 8-4, 8-5, 8-36
Standards and Specifications for Geodetic Control Networks (SSGCN) 2-3, 6-1
standing operating procedure (SOP) 1-13, 1-14, 2-5–7, 6-4, 11-1, 11-6, 11-13, 11-14, 11-18, 11-26
static 8-1, 8-2, 8-15–17, 8-21, 8-24, 8-27, 8-28, 8-30, 8-39–41, 8-44, 8-45, B-5, B-10, B-11, B-14
static surveying 1-9
station
  designation 8-33, 8-34
  mark 5-6
  markers 6-3
  occupation 8-32
  traverse 6-3
stop and go B-10
stop-and-go kinematic, *see* kinematic, stop-and-go
supplementary surveys 1-6
survey 11-1, B-6, B-12, B-15, C-4, C-7
  airfield 10-1, 10-2, 10-8
  airfield obstruction 11-22
  AOC, *see* airport obstruction chart (AOC)
  artillery 9-1
  carrier-beat phase 8-47
    absolute 8-47
    relative 8-47
  computation C-1
  control 5-1
  construction 1-6
  conventional 8-21
  data 3-5
  DGPS 8-31, 8-37, 8-39
  differential 8-54
  engineering 8-39, 8-55
  equipment 1-8
  fieldwork 1-11
  geodetic 8-55
  geodetic control 8-18, 8-27
  GPS 8-25, 8-26, 8-28, 8-54. *See also* Global Positioning System (GPS)
  GPS control 8-27

NAVAID 1-6, 10-1, 10-2. *See also* navigational aid (NAVAID)
notes 1-14, 1-15
erasures 1-15
obstruction 11-26. *See also* airport obstruction chart (AOC)
project control 8-20
rapid static 8-15, 8-16, 8-39, 8-45, B-12, B-13
team 6-4
topographic 1-6, 8-20, 8-39, 8-42, 8-55, 9-1, 11-13
vertical-control 8-17
survey control point (SCP) 1-1, 1-3, 1-5, 3-3, 3-11, 5-3, 5-6, 5-8, 5-10, 9-1, 9-2, 9-4, 11-4
survey fieldwork
accuracy 1-12
equipment 1-11
errors 1-12
personnel 1-11
progress 1-12
purpose 1-12
terrain 1-11
weather 1-11
survey information center (SIC) 1-3, 1-9, 3-3, 9-2, 11-21
survey missions 1-1
deployable weapons 1-1
intelligence 1-2
joint-level operations 1-3
National Imagery and Mapping Agency 1-1
signal 1-2
topographic missions 1-3
United States Air Force 1-2
survey operations 2-1
survey planning and coordination element (SPCE) 9-1, 9-2, 9-4
surveying 8-16
survey planning and coordinating officer (SPCO) 9-3
SV, *see* satellite vehicle (SV)

T

TA, *see* target acquisition (TA)
TAB, *see* target acquisition battery (TAB)
TACAN, *see* tactical air navigation (TACAN)
tactical air navigation (TACAN) 10-2
target 5-16, 6-4
AISI 5-17. *See also* automated integrated survey instrument (AISI)
lighted target sets 5-19
optical-theodolite 5-16
range-pole 5-19
survey 5-21
target and tribrach adjustment 5-20
setup 5-19
tripod 5-19
target acquisition battery (TAB) 9-1
target acquisition (TA) 3-3, 9-3
TDY, *see* temporary duty (TDY)
TDZE, *see* touchdown zone elevation (TDZE)
TEC, *see* Topographic Engineering Center (TEC)
technical OPORD (TECHOPORD) 11-2, 11-13, 11-15, 11-26. *See also* operation order (OPORD)
TECHOPORD, *see* technical OPORD (TECHOPORD)
temporary duty (TDY) 11-16, 11-17
temporary markers 3-6
terrain analyst 1-3
theodolite 5-1, 5-2
three dimensional (3D) 8-2, 8-4, 8-6, 8-9, 8-10, 8-13, 8-18, 8-39–41, 8-54, 8-56, 8-59–61, 8-65, 8-66, B-7, B-9, B-16
Topographic Engineering Center (TEC) 4-10, 8-44, 11-14
topographic survey 1-6. *See also* survey
topographic surveyor 1-1, 1-3–5, 1-8, 1-9, 1-11–13, 5-2, 5-31, 8-63, 9-1
touchdown zone elevation (TDZE) 10-2, 10-9, 10-10
transitional surface 10-5
transportation 3-16
traverse 1-7, 1-16, 3-2, 5-28, 6-1, 6-2, 6-4, 6-5, 6-7, 6-8, 8-20, 8-27–29, 8-41, 8-51, 8-53, 8-58–61, 10-7, 11-21, 11-28, 11-31, C-7, C-18, C-20–22
closed 6-1
closed on a second known point 6-2
closure 8-51
loop 6-2, 8-56
open 6-1
software 8-53
stations 6-3
traverse lines 3-4
triangulation 3-1, 3-4, 8-20, 8-28
trig lists 3-3
trigonometric leveling 3-2
trip report 2-9
two dimensional (2D) 8-6, 8-11, 8-14, 8-18, 8-56, 8-61

U

UDS, *see* user-defined sequence (UDS)
UERE, *see* user equivalent range error (UERE)
UHF, *see* ultrahigh frequency (UHF)
ultrahigh frequency (UHF) 8-38
United States Air Force (USAF) 1-2, 1-9
United States Army Aeronautical Services Agency (USAASA) 1-2, 1-7, 10-1
United States Army Engineer School (USAES) 1-5
Universal Polar Stereographic (UPS) 4-3, 4-7
universal time, coordinated (UTC) 8-7, 8-32, 8-36
Universal Transverse Mercator (UTM) 4-3, 4-6, 5-14, C-7, C-11
UPS, *see* Universal Polar Stereographic (UPS)
US Army Corps of Engineers (USACE) 2-3, 3-3, 3-8, 4-10
US Coast Guard (USCG) 1-4, 8-38
US Geologic Survey (USGS) 3-3, 11-14
US Military Grid-Reference System (MGRS) 4-6, 4-7
US National Control Network 3-2
USAASA, *see* United States Army Aeronautical Services Agency (USAASA)
USACE, *see* US Army Corps of Engineers (USACE)
USAF, *see* United States Air Force (USAF)
USCG, *see* US Coast Guard (USCG)
user equivalent range error (UERE) 8-9

user-defined sequence (UDS) 5-27, 5-28
USGS, *see* US Geologic Survey (USGS)
UTC, *see* universal time, coordinated (UTC)
UTM, *see* Universal Transverse Mercator (UTM)
UTM grids. *See also* Universal Transverse Mercator (UTM) 4-6

V

VDOP, *see* vertical DOP
vertical control 8-68
vertical DOP (VDOP) 8-11, 8-19. *See also* dilution of precision (DOP)
vertical observations 5-10
very-high frequency (VHF) 8-38
VHF, *see* very-high frequency (VHF)
VHF omnidirectional range (VOR) 10-2
VOR, *see* VHF omnidirectional range (VOR)
VOR and TACAN (VORTAC) 10-2
VORTAC, *see* VOR and TACAN (VORTAC)

W

warning order 11-14
WGS, *see* World Geodetic System (WGS)
WGS 84, *see* World Geodetic System 1984 (WGS 84)
World Geodetic System (WGS) 1-2, 4-1, 4-3, 4-7
World Geodetic System 1984 (WGS 84) 1-2, 1-7, 4-8, 4-9, 8-17, 8-21, 8-37, 8-40, 9-2, 10-7, B-9
World GEOREF System 4-7

Y

Y-code 8-8, 8-38, B-12

Z

ZD, *see* zenith distance (ZD). *See also* vertical observations
zenith 5-1
zenith distance (ZD) 5-10, 5-13. *See also* vertical observations

Zenith Distance/Vertical Angle

For use of this form, see FM 3-34.331; the proponent agency is TRADOC

STATION _____ DATE _____ 19 _____

INSTRUMENTMAN _____ INSTRUMENT _____

RECORDER _____ WEATHER _____

OBJECT OBSERVED	CHRON TIME			STOP WATCH	TEL D/R	CIRCLE		MICRO		MEAN	ZEN DIST	REMARKS	LEVELS	
	H	M	S					1ST	2D				W	E

General Survey Notes

For use of this form, see FM 3-34.331; the proponent agency is TRADOC.

Project		Weather			Wind		Instrument			Date	
Designation		Location			Temp		Organization			Page no.	No. of Pages
Point	H Dist	H Scale	RI	V Scale	Prod ±	RC −	DE ±	HI	Elev.	Remarks	

DA Form 5818-R, AUG 89

Field Sheet, Infrared

For use of this form, see FM 3-34.331; the proponent agency is TRADOC.

PROJECT						
ORGANIZATION			DATE		APPROX DISTANCE	
ZERO CORRECTION *	CALIBRATION DATE		OBSERVER		RECORDER	
INSTRUMENT STATION		H.I.	ELEVATION	ELEVATION INSTRUMENT	ECCENTRICITY * TOWARD AWAY	INST NO
REFLECTOR STATION		H.I.	ELEVATION	ELEVATION REFLECTOR	ECCENTRICITY * TOWARD AWAY	PRISM NO

METEOROLOGICAL READINGS				ZD INSTRUMENT TO REFLECTOR		
	TIME	PRESSURE (Hg)	TEMP. (DRY)	DISTANCE (meters)		
		IN.	F°	1		
INSTRUMENT				2		
REFLECTOR				3		
SUM				4		
MEAN				5		
CORRECTION FACTOR (PPM)				6		
				7		
				8		
				9		
				10		
				SUM		

$$PRODUCT = UD \times PPM$$
$$RC = PRODUCT \times 10^{-6}$$
$$T = UD \pm Z \pm RC$$
$$H' = (T)^2 - (d)^2$$
$$H' = \sin ZD \times T$$
$$H_{FT} = H' \times 3.280840$$

UD		MEAN UNCORRECTED SLOPE DISTANCE (UD)		
PPM		ZERO CORRECTION° (Z)		
PRODUCT		REFRACTIVE INDEX CORRECTION (RC)		
RC		CORRECTED SLOPE DISTANCE (T)		
DIFF. OF ELEV. (d)		UNCORRECTED HORIZON. DISTANCE (H')		
° Obtained from Instrument Calibration. * Toward Eccentricity must be ADDED. Away Eccentricity must be SUBTRACTED.		ECCENTRIC CORRECTION * (EC)		
		HORIZON DISTANCE (H_M) / (H_{FT})		

REMARKS

COMPUTED BY	DATE	CHECKED BY	DATE	PAGE OF

DA Form 5819-R, AUG 89

Three-Wire Leveling

For use of this form, see FM 3-34.331; the proponent agency is TRADOC.

Project	Location	Organization			
Observer	Recorder	Instrument	Sun	Wind	Weather

From	To	Date	Time	Line or Net	Page no.	No. of pgs.

Station	Backsight Face of rod	Mean	Back of rod	Interval	Sum of intervals	Foresight Face of rod	Mean	Back of rod	Interval	Sum of intervals	Remarks

INST OP INT _____

1st COMP INT _____

2nd COMP INT _____

DA Form 5820-R, AUG 89

Airfield Compilation Report

For use of this form, see FM 3-34.331; the proponent agency is TRADOC.

SURVEY AGENCY: 1						
AIRPORT NAME				IDENTIFIER		
CITY 4		STATE 5	EDITION 6		SURVEY DATE 7	
AIRPORT REFERENCE POINT	8	LATITUDE 9	LONGITUDE 10		Δ CL OR Θ ANGLE 11	
AIRPORT LOCATION POINT	12	LATITUDE 13	LONGITUDE 14		DECLINATION 15	
AIRPORT ELEVATION (In feet) 16		LOCATED 17			CONTROL TOWER FLOOR ELEVATION (In feet) 18	
19 DATUM				POSITION CODE – 1. Field Survey 2. Photogrammetric 3 .Other		

AIRPORT DATA	ELEVATION	LATITUDE	LONGITUDE	YR-CODE	REMARKS	OFFICE CODE
20	21	22	23	24	25	26

RUNWAY	DSPLCD THR LENGTH	RWY END ELEVATION	LATITUDE	LONGITUDE	WIDTH / LENGTH	GEODETIC AZ. (N) / MAG. BEARING (N)	OFFICE CODE
							34

DA Form 5821-R, AUG 89

Precision Approach Radar (GCA) Data

For use of this form, see FM 3-34.331; the proponent agency is TRADOC.

AIRPORT NAME		
CITY	STATE	SURVEY DATE (Mo./Day/Year)

PAR COMPONENTS AND PERTINENT RUNWAY DATA Numbered items correspond to the diagram below.	LATITUDE	LONGITUDE	ELEVATION
	(1 / 100 Second)		(1 / 10 Foot)
1. PAR Antenna			
2. Touchdown Reflector			
3. The point on runway C/L closest to the Touchdown Reflector (Item 2).			
4. Runway C/L End.			
5. Runway C/L End.			
6. The point on runway C/L closest to PAR Antenna.			
7. Displaced Threshold (If applicable).			

PAR Antenna – Enter Numeral 1 in circle to indicate PAR Antenna Position.

Touchdown Reflector – Enter Numeral 2 in circle to indicate Touchdown Reflector.

PAR – GROUND DISTANCE			
3 to 7 FEET	1 to 6 FEET	2 to 3 FEET	GEODETIC AZIMUTH SOUTH
(If applicable)	3 to 6 FEET	3 to 4 FEET	4 to 5 ° ' "

ADD APPLICABLE NUMBERS TO CIRCLES AND RUNWAY ENDS. SHOW NORTH ARROW.

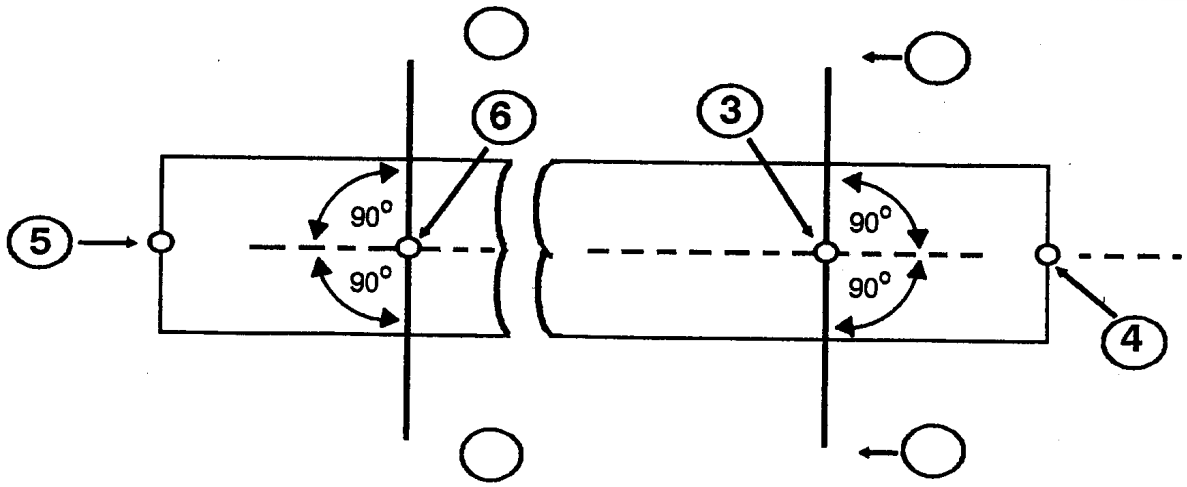

DA Form 5822-R, AUG 89

Instrument Landing System Data

For use of this form, see FM 3-34.331; the proponent agency is TRADOC.

AIRPORT NAME		
CITY	STATE	SURVEY DATE (Mo./Day/Year)

ILS COMPONENTS AND PERTINENT RUNWAY DATA Numbered items correspond to the diagram below.	LATITUDE	LONGITUDE	ELEVATION
	(1 / 100 Second)		(1 / 10 Foot)
1. Localizer Antenna (Course Array): Point on ground beneath the localizer antenna.			
2. Glide Slope Indicator (GSI): Center of the base supporting the antenna.			
3. The point on runway C/L closest to the base of the Glide Slope Indicator Antenna (Item 2).			
4. Runway C/L End.			
5. Runway C/L End.			
6. The point on runway C/L closest to the base of the offset Localizer (Case 2).			

MARKERS	LATITUDE	LONGITUDE	GROUND DISTANCE TO END OF RUNWAY
	(1 / 10 Second)		
INNER OR B. C. MARKER (RUNWAY END)			feet
MIDDLE MARKER (RUNWAY END)			feet
OUTER MARKER (RUNWAY END)			feet

LOCALIZER — GROUND DISTANCE						
Case 1 (normal)		Case 2 (offset)				
1 to 5	FEET	1 to 6	FEET	2 to 3	FEET	GEODETIC AZIMUTH SOUTH ° ′ ″
		5 to 6	FEET	3 to 4	FEET	4 to 5

ADD APPLICABLE NUMBERS TO CIRCLES AND RUNWAY ENDS. SHOW NORTH ARROW.

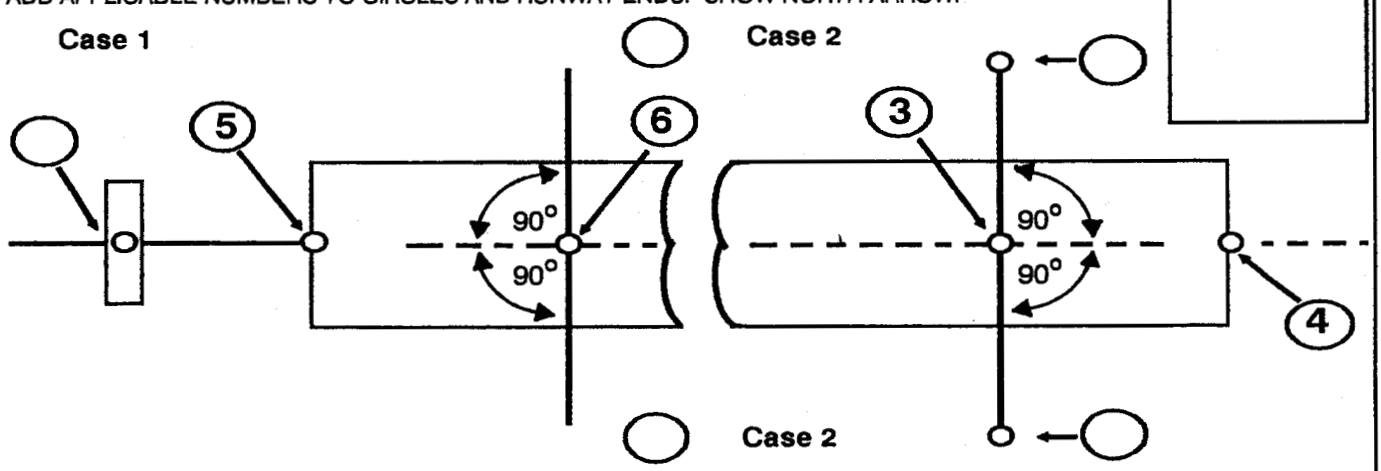

DA Form 5827-R, AUG 89

FM 3-34.331 (FM 5-232)

26January 2001

By Order of the Secretary of the Army:

ERIC K. SHINSEKI

General, United States Army

Chief of Staff

Official:

JOEL B. HUDSON

Administrative Assistant to the

Secretary of the Army

0034601

DISTRIBUTION:

Active Army, Army National Guard, and US Army Reserve: To be distributed in accordance with the initial distribution number 110678, requirements for FM 3-34.331.