ARMY, MARINE CORPS, NAVY, AIR FORCE

ICAC2

MULTISERVICE PROCEDURES FOR INTEGRATED COMBAT AIRSPACE COMMAND AND CONTROL

FM 3-100.2 (FM 100-103-1)
MCRP 3-25D
NTTP 3-52.1(A)
AFTTP(I) 3-2.16

AIR LAND SEA APPLICATION CENTER

June 2000

DISTRIBUTION RESTRICTION: Approved for public release; distribution is unlimited.

MULTISERVICE TACTICS, TECHNIQUES, AND PROCEDURES

FOREWORD

This publication has been prepared under our direction for use by our respective commands and other commands as appropriate.

JOHN N. ABRAMS
General, USA
Commander
Training and Doctrine Command

J. E. RHODES
Lieutenant General, USMC
Commanding General
Marine Corps Combat
Development Command

B. J. SMITH
Rear Admiral, USN
Commander
Navy Warfare Development Command

TIMOTHY A. KINNAN
Major General, USAF
Commander
Headquarters Air Force Doctrine Center

This publication is available on the General Dennis J. Reimer Training and Doctrine Digital Library at www.adtdl.army.mil

PREFACE

1. Scope

This multiservice tactics, techniques, and procedures (MTTP) publication outlines the importance of an integrated airspace control function on the battlespace and describes the organization responsible for airspace control in joint operations. It establishes MTTP for planning, implementing, executing, and deconflicting airspace, including addressing specific airspace control issues for specialized missions. This publication also outlines the information, interfaces, and communications required for supporting the integrated airspace control function.

2. Purpose

This publication is designed to facilitate multiservice coordination, integration, and regulation of airspace during exercises, contingencies, and other operations where more than one Service component must share the airspace for operational use.

3. Applicability

The target audience for this publication is the joint force commander (JFC), the JFC's staff, the component commanders and their staffs, and all others responsible for airspace command and control management or planning. This publication provides formal training courses with reference material for teaching ICAC2 considerations to future joint force planners and operators. By providing detailed ICAC2 information, this publication responds to an identified shortfall in existing joint doctrine. This publication supplements joint doctrine by providing the warfighter the necessary MTTP needed to execute ICAC2 during exercises, contingencies, and other operations.

4. Implementation Plan

Participating Service command offices of primary responsibility (OPRs) will review this publication, validate the information, and, where appropriate, reference and incorporate it in Service and command manuals, regulations, and curricula as follows:

Army. The Army will incorporate the tactics, techniques, and procedures (TTP) in this publication in US Army training and doctrinal publications as directed by the Commander, US Army Training and Doctrine Command (TRADOC). Distribution is in accordance with DA Form 12-99-R.

Marine Corps. The Marine Corps will incorporate the TTP in this publication in US Marine Corps training and doctrinal publications as directed by the Commanding General, US Marine Corps Combat Development Command (MCCDC). Distribution is in accordance with MCPDS.

Navy. The Navy will incorporate the TTP in US Navy doctrinal and training publications as directed by the Commander, US Navy Warfare Development Command (NWDC). Distribution is in accordance with MILSTRIP Desk Guide and NAVSOP Pub 409.

Air Force. Air Force units will validate and incorporate appropriate procedures in accordance with applicable governing directives. Distribution is in accordance with AFI 33-360.

5. User Information

a. TRADOC-MCCDC-NWDC-Headquarters Air Force Doctrine Center (HQ AFDC) Air Land Sea Application (ALSA) Center developed this publication with the joint participation of the approving Service commands. ALSA will review and update this publication as necessary.

b. This publication reflects current joint and Service doctrine, command and control (C2) organizations, facilities, personnel, responsibilities, and procedures. Changes in Service protocol, appropriately reflected in joint and Service publications, will likewise be incorporated in revisions of this document.

c. We encourage recommended changes for improving this publication. Key your comments to the specific page and paragraph and provide a rationale for each recommendation. Send comments and recommendations directly to—

Army

Commander
US Army Training and Doctrine Command
ATTN: ATDO-A
Fort Monroe VA 23651-5000
DSN 680-3454 COMM (757) 727-3454
E-mail Address: doctrine@monroe.army.mil

Marine Corps

Commanding General
US Marine Corps Combat Development Command
ATTN: C42
3300 Russell Road Suite 318A
Quantico, VA 22134-5021
DSN 278-6234 COMM (703) 784-6234

Navy

Navy Warfare Development Command
Doctrine Development Division (Code N5)
686 Cushing Road
Newport, RI 02841-1207
DSN 948-4201 COMM (401) 841-4201

Air Force

Headquarters Air Force Doctrine Center
ATTN: DJ
216 Sweeney Boulevard, Suite 109
Langley AFB, VA 23665-2722
DSN 754-8091 COMM (757) 764-8091
E-mail Address: afdc.dj@langley.af.mil

ALSA

ALSA Center
ATTN: Director
114 Andrews Street
Langley AFB, VA 23665-2785
DSN 575-0902 COMM (757) 225-0902
E-mail Address: alsa.director@langley.af.mil

*FM 3-100.2 (FM 100-103-1)
*MCRP 3-25D
*NTTP 3-52.1(A)
*AFTTP(I) 3-2.16

FM 3-100.2 (FM 100-103-1) — US Army Training and Doctrine Command, Fort Monroe, Virginia

MCRP 3-25D — Marine Corps Combat Development Command, Quantico, Virginia

NTTP 3-52.1(A) — Navy Warfare Development Command, Newport, Rhode Island

AFTTP(I) 3-2.16 — Air Force Doctrine Center, Maxwell Air Force Base, Alabama

30 June 2000

ICAC2

Multiservice Procedures for Integrated Combat Airspace Command and Control

TABLE OF CONTENTS

Page

EXECUTIVE SUMMARY vii

CHAPTER I CONCEPT AND ORGANIZATION
Background I-1
Concept I-1
Environment I-1
Objectives I-1
Basic Considerations I-2
Fundamental Principles I-3
Organization I-4

CHAPTER II PLANNING, IMPLEMENTATION, AND EXECUTION
Background II-1
Planning II-1
Implementation II-3
Execution II-5

Distribution Restriction: Approved for public release. Distribution is unlimited

*This publication supersedes FM 100-103-1, FMFRP 5-61/MCWP 3-25.1, NDC TACNOTE 3-52.1, AFTTP(I) 3-2.16, 3 Oct 94

CHAPTER III MISSIONS REQUIRING SPECIAL COORDINATION
Military Operations Other Than War III-1
Unmanned Aerial Vehicle Operations III-2
Conventional Air Launched Cruise Missiles III-4
Army Tactical Missile System III-4
Amphibious Operations III-10
Tomahawk Land Attack Missile Operations III-21

APPENDIX A Army Operations A-1

APPENDIX B Navy Operations B-1

APPENDIX C Air Force Operations C-1

APPENDIX D United States Marine Corps Operations D-1

APPENDIX E Special Operations Forces Operations E-1

APPENDIX F Procedural Airspace Control Measures F-1

APPENDIX G Fire Support Coordinating Measures G-1

APPENDIX H The Bullseye Reference System H-1

REFERENCES References-1

GLOSSARY Glossary-1

INDEX Index-1

FIGURES
II-1 Sample Airspace Control Plan Format II-1
II-2 Procedural Airspace Control Measures II-4
II-3 Critical Nodes II-7
III-1 Sample Tactical UAV Mission Profile III-2
III-2 Sample Unmanned Aerial Vehicle Protocols III-3
III-3 Position Area Hazard Airspace Coordination Area III-6
III-4 Target Area Hazard Airspace Coordination Area III-6
III-5 Navy Tactical Air Control Center (Afloat) III-11
III-6 Air Operations Tactical Air Control Ashore III-20
III-7 Tomahawk Campaign Command and Control III-22
A-1 Army Air Ground System A-6
A-2 Battlefield Coordination Detachment Organization A-8
A-3 A2C2 Tasks A-9
B-1 Navy Composite Warfare Structure B-4
B-2 Navy Integrated Airspace C2 ..... B-9
C-1 Theater Air Control System C-3
D-1 Organization of Marine Air-Ground Task Force D-1

D-2 MACCS and MACG Relationship D-4
D-3 MACCS Communications Network D-13
F-1 High-Density Airspace Control Zone F-6
F-2 Minimum Risk Routes/Low-Level Transit Routes F-8
F-3 Standard Use Army Aircraft Flight Routes F-10
G-1 Fire Control and Support Measures G-2
G-2 Fire Support Coordination Line G-3
G-3 Restrictive Fire Line, Fire Support Area, and Zone of Fire G-6
H-1 Bullseye Reference System H-1
H-2 Bullseye Example One H-3
H-3 Bullseye Example Two H-3

TABLES

III-1 ARG Planning and Operations III-15
III-2 MEU(SOC) Air Planning and Operations III-17
III-3 Tomahawk Command and Control Responsibilities III-25

EXECUTIVE SUMMARY

Multiservice Procedures for Integrated Combat Airspace Command and Control (ICAC2)

Overview

This publication–

- **Describes the organizational concept for integrating the airspace control function.**
- **Outlines the required organizational elements with duties and responsibilities.**
- **Details the joint force commander's staff actions and options to be considered in the formulation of airspace control policy.**
- **Describes the airspace control process.**
- **Describes the decisions of the airspace control authority (ACA).**
- **Lists the considerations for development of the airspace control plan (ACP).**
- **Describes the components of an airspace control order (ACO).**
- **Describes the communications and information flow required to support airspace command and control (C2).**
- **Describes the airspace control procedures for amphibious operations, the Army Tactical Missile System (ATACMS), unmanned aerial vehicles (UAV), military operations other than war (MOOTW), the Tomahawk land attack missile (TLAM), and the conventional air launched cruise missile (CALCM).**

Introduction

The modern battlespace, including the airspace above it, is becoming increasingly saturated. Effectively coordinating, integrating, and deconflicting airspace used by friendly forces will be a challenge in future operations. Executing the airspace control function will require a joint effort, using Service airspace C2 systems as a framework for integration. This publication provides the methodology for planning, implementing, and executing a threat-integrated airspace control function in combat.

Concept and Organization

Successful airspace integration encompasses the spectrum of multiservice doctrine, architectures, systems, and processes to accomplish the overall objectives of ICAC2. The concept emphasizes supporting short-notice requirements in a wide variety of environments to accomplish the main objectives of ICAC2. Basic considerations highlight the authoritative nature of this MTTP, without restricting the commander's options. Fundamental principles of top-down guidance, interoperability and connectivity, and

delegation of authority should enhance the commander's organization of airspace control boundaries and command relationships.

Planning, Implementation, and Execution

Successfully planning, implementing, and executing airspace control requires the JFC, joint force air component commander (JFACC), ACA, area air defense commander (AADC), and component commanders to accomplish specific actions. Emphasis in the planning phase is on the formulation of airspace control policy by the JFC and his/her staff.

The ACA (based on JFC policy and guidance, assessment of the battle situation, and in coordination with component commanders) develops the organization, defines the airspace control process, and implements these decisions through the ACP.

Execution is accomplished via the ACO. The ACO provides specific airspace control procedures applicable for a defined period of time. While coordination and integration of airspace requirements should be accomplished at the lowest possible level, much is actually accomplished at the senior C2 elements due to required ACA approval for most airspace control measures (ACMs). Regulation of the airspace control function is decentralized to the maximum extent possible.

Missions Requiring Special Coordination

Each Service brings specialized capabilities and weapons systems to the fight, all of which require consideration when building an integrated combat airspace system. Personnel from all Services working within the airspace system should have some degree of familiarity with the structures in the other Services. ACMs are used to segregate or separate missions from each other to ensure safety and effectiveness.

MOOTW span a range of missions including peacekeeping, deterrence, and transition to armed conflict, and each can generate complex ICAC2 requirements. Effective airspace control in the MOOTW environment should be based upon utility, flexibility, and scalability.

Airspace management for UAVs requires a number of airspace management elements to facilitate operational missions, including launch and recovery sites, flight routes and altitudes, and specific mission areas. Some form of C2 also is necessary to ensure that UAV deconfliction procedures are published, disseminated, integrated, and followed by the participating Services. The UAV concepts and protocols described in this chapter provide procedures that enhance the joint task force (JTF) commander's freedom of action with a minimum of coordination.

If CALCMs are used, it is extremely important to incorporate them into the airspace planning process because it is difficult to accurately track the missile with the normal radar elements used for theater airspace control. This chapter describes the procedural ACMs used to support CALCM operations.

While modern technologies have greatly improved weapon systems, integrating their employment with existing or other new technologies often is difficult. The ATACMS is a

good example. Coordination for ATACMS employment can be time consuming and complicated. The procedures described in this chapter allow each Service to employ its weapons systems within certain allowable risks.

Naval expeditionary operations integrate ships, aircraft, weapons, and landing forces in operations against a hostile or potentially hostile shore. In amphibious operations, airspace control is a multifunctional effort, consisting of surveillance, warning, launch and engagement authority, air movement control, close air support (CAS), and communications. Close cooperation and detailed coordination among all participants is essential to the success of the operations. Procedures to effect this cooperation are detailed in this chapter.

A joint force operation may require TLAM integration into the JFC's C2 architecture and airspace deconfliction process. This chapter details TLAM C2 relationships, communications, and missile and mission management.

PROGRAM PARTICIPANTS

The following commands and agencies participated in the development of this publication:

Joint

US Joint Forces Command Joint Warfighting Center, Suffolk, VA
Joint Firepower Control Course, Nellis AFB, NV

Army

US Army Training and Doctrine Command, (DCSDOC/DSCT), Fort Monroe, VA
US Army Aeronautical Services Agency, Fort Belvoir, VA
US Army Air Defense Artillery School, Ft Bliss, TX
US Army Air Traffic Control Activity, Ft Rucker, AL
US Army Aviation Center, Ft Rucker, AL
US Army Field Artillery School, Ft Sill, OK
US Army Intelligence Center, Ft Huachucha, AZ
1-58 Aviation Regiment, Ft Bragg, NC
Combined Arms Doctrine Division, Ft Leavenworth, KS

Marine Corps

Marine Corps Combat Development Command, Joint Doctrine Branch, Quantico, VA
Marine Air Warfare and Training Squadron-1, Yuma, AZ
Marine Corps Communications Electronics School, Twenty Nine Palms, CA

Navy

Naval Warfare Development Command, Norfolk, VA
Commander, Tactical Air Group One, San Diego, CA
Commander, Second Fleet, Norfolk, VA
Commander, Tactical Training Group Atlantic, Virginia Beach, VA
Commander, Surface Warfare Development Group, Norfolk, VA
AEGIS Training Center, Dalghren, VA
Commander, Carrier Group Four, FPO AE

Air Force

Headquarters Air Force Doctrine Center, Maxwell AFB, AL
Headquarters Air Force Doctrine Center, Det 1, Langley Air Force Base, VA
Headquarters Air Combat Command (DISA/IGIO), Langley AFB, VA
Headquarters Air Force Special Operations Command (XPP/DOF), Hurlburt Filed, FL
Headquarters United States Air Force (XOCE/XOOS), Washington DC
608th Combat Plans Squadron, Barksdale AFB, LA
609th Combat Plans Squadron, Shaw AFB, SC
612th Combat Plans Squadron, Davis-Monthan AFB, AZ

613th Air Operations Squadron, Andersen AFB, Guam
Air Force Flight Standards Agency, Andrews AFB, MD
Aerospace Command and Control Agency, Langley AFB, VA
Air Ground Operations School, Nellis AFB, NV
Command and Control Training and Innovation Center, Hurlburt Field, FL

Chapter I
CONCEPT AND ORGANIZATION

1. Background

Integrated combat airspace command and control (ICAC2) is a subsystem of the theater air-ground systems (TAGS). This chapter explains the operational concept for integrating the airspace control function between components. It develops the architecture for an ICAC2 system by describing the objectives the system should achieve, basic considerations and fundamental principles on which the system needs to be founded, and various scenarios in which the system must operate.

This chapter describes the airspace control organization at the component command level and above. The organization melds component capabilities into an ICAC2 system for joint operations.

2. Concept

The operational concept focuses on an ICAC2 system capable of supporting short-notice contingency operations in any type of environment. A variety of possible operating locations that might constitute the theater of operations and combined forces and host nation (HN) interface may or may not be available. This may include the need for a preplanned airspace control plan (ACP) to support contingency operations.

3. Environment

The National Military Strategy calls for flexible and selective engagement, involving a broad range of activities and capabilities to address and help shape the evolving international environment. United States (US) military forces must perform three sets of tasks to achieve the military objectives of promoting stability and thwarting aggression. These three tasks are peacetime engagement, deterrence and conflict prevention, and fighting and winning our nation's wars. Accomplishing the specific tasks of the strategy is facilitated by the two complementary strategic concepts of overseas presence and power projection. (The National Military Strategy of United States of America, 1997)

4. Objectives

To provide the required versatility and flexibility, ICAC2 must accomplish the following:

a. Maximize the combat capability of friendly forces.

b. Minimize restrictions on friendly combat operations, both surface and air.

c. Maximize commonality while retaining individual component protocol.

d. Emphasize Interservice airspace command and control (C2) linkage—the means to incorporate all component requirements—then coordinate, integrate, and regulate the airspace.

e. Support air defense operations.

f. Reduce the risk of fratricide.

g. Integrate US airspace C2 and air defense control structures with HN airspace and air defense control structures.

h. Accommodate mission requirements, including amphibious, maritime, special operations forces (SOF), and airlift operations.

i. Support component and/or joint doctrine while providing the basis for tactics, techniques, and procedures (TTP).

j. Maximize the effectiveness of combat operations.

5. Basic Considerations

The organization, responsibilities, and procedures supporting the ICAC2 system must—

a. Recognize the need for each component within the joint force to operate a variety of air vehicles and weapon systems, both high and low speed, rotary- and fixed-wing (manned and unmanned), within the assigned airspace control area.

b. Recognize the need for each component to use the assigned airspace with maximum freedom, consistent with the level of operational risk acceptable to the joint force commander (JFC).

c. Perform airspace control activities in congruence with air defense operations to integrate and synchronize surface-to-air defense weapons and air defense aircraft for maximum effectiveness.

d. Discriminate quickly and effectively between friendly , neutral, and enemy air operations and vehicles.

e. Respond to the requirements of the joint force. The airspace control system needs to be capable of supporting high-density traffic and surge operations as may be required by the JFC.

f. Coordinate and integrate surface force operations, supporting fires, air operations, air defense operations, special operations, and airspace control activities.

g. Accommodate US, HN, and multinational airspace control activities within the theater.

h. Recognize the saturation levels and limitations of airspace control networks.

i. Allow for temporary restrictive airspace control measures (ACMs) on certain areas of airspace to allow subordinate commanders total freedom of operations.

j. Coordinate offensive operations using electronic warfare elements, strike aircraft, and cruise missiles to ensure that defensive elements or procedures of the force do not unacceptably inhibit or degrade offensive capabilities.

k. Ensure that the airspace control network remains survivable and effective.

l. Provide maximum opportunities to employ deception measures.

m. Standardize communications data, format, and language requirements in multinational operations to reduce the possibility for differences in interpretation, translation, and application of airspace control procedures during multinational operations.

n. Support day or night and all-weather operations.

o. Coordinate with incoming out-of-theater assets.

6. Fundamental Principles

The most effective integration of the airspace C2 function is based on implementing three important tenets: top-down guidance, interoperability and connectivity, and delegation of authority.

a. Top-Down Guidance. The key ingredients of an effective, integrated airspace control function are the development of broad policies and procedures for airspace control by the airspace control authority (ACA) and approved by the JFC and the ACA developing the ACP based on those policies and procedures.

(1) The JFC establishes the geographic boundaries for airspace control and establishes priorities and restrictions for airspace use. The JFC designates the ACA and defines the relationship between the ACA and component commanders. The ACA does not have the authority to approve, disapprove, or deny combat operations. That authority is vested only in the operational commander. Matters on which the ACA is unable to obtain agreement will be referred to the JFC for resolution.

(2) Based on the JFC's guidelines, the ACA, in coordination with the component commanders, then develops the ACP for implementing and executing the airspace control function. Each operation's specific ACP will depend on the military objectives, friendly capabilities, enemy forces, and other considerations such as combined forces and HN requirements.

b. Interoperability and Connectivity. The airspace control system normally includes each Service's airspace control assets brought to the area of responsibility (AOR)/joint operations area (JOA). Employment of these assets is most efficient when the integrity of each component's airspace control capability is maintained within the integrated system. Benefits include the following:

(1) Exploiting the component's organic capabilities.

(2) Minimizing the additional requirements for command, control, and communications (C3) linkage.

(3) Reducing the impact on component missions since airspace control facilities normally perform other functions, including air defense and overall C2.

(4) Facilitating the delegation of authority to a subordinate commander, either to execute a special mission or to provide airspace control on a continuing basis in a defined sub-element of the assigned airspace control area/sector.

c. Delegation of Authority. The JFC may delegate control authority for a specified airspace area to a subordinate commander. In deciding to delegate, the JFC considers a subordinate command's airspace control capabilities and requirements, geography, threat, and other pertinent factors. Normally, authority is delegated either to a subordinate commander on a short-term basis to execute a special mission or to a component commander to provide airspace control on a continuing basis in an airspace control sector, which is usually coincident with a designated air defense region.

7. Organization

Based on the operational situation, component capabilities, and mission complexity, the JFC establishes the airspace control boundaries and command relationships and assigns authority to subordinates. The mission, objective, and capabilities of the component elements are the three most fundamental considerations in establishing the airspace C2 arrangement. The JFC may establish his/her organization on an area, functional, or Service basis. Regardless of the chosen option, integrity of the airspace control systems at the component command level (functional or Service) and below should be maintained. The following definitions are provided as the basis of airspace management/development.

a. Airspace Control.

(1) Airspace Control in the Combat Zone. Airspace control in the combat zone is a process used to increase combat effectiveness by promoting the safe, efficient, and flexible use of airspace. Airspace control is provided in order to prevent fratricide, enhance air defense operations, and permit greater flexibility of operations. Airspace control does not infringe on the authority vested in commanders to approve, disapprove, or deny combat operations. (Joint Publication 1-02)

(2) Airspace Control Area. The airspace control area is airspace that is laterally defined by the boundaries of the area of operations. The airspace control area may be subdivided into airspace control subareas. (Joint Publication 1-02)

(3) Airspace Control Sector. The airspace control sector is a subelement of the airspace control area, established to facilitate the control of the overall area. Airspace control sector boundaries normally coincide with air defense organization subdivision boundaries. Airspace control sectors are designated in accordance with procedures and

guidance contained in the ACP in consideration of the Service component, host nation, and allied airspace control capabilities and requirements. (Joint Publication 1-02)

(4) Airspace Control Boundary. Airspace control boundaries are the lateral limits of an airspace control area, airspace control sub-area, high-density airspace control zone, or airspace-restricted area. (Joint Publication 1-02)

b. Command Relationships. The JFC may designate a joint force air component commander (JFACC), an ACA, and an area air defense commander (AADC). The responsibilities of the JFACC, ACA, and AADC are interrelated and are normally assigned to one individual to unite joint air operations with joint airspace control and joint air defense in support of the JFC's campaign. They may be assigned to two or more individuals when the situation dictates. If the JFC decides not to assign the JFACC, ACA, and AADC as one individual, then close coordination between all three positions is absolutely essential. Designating one component commander as JFACC, AADC, and ACA may simplify the coordination required to develop and execute fully integrated joint air operations. (See Joint Publication 3-56.1, *Command and Control for Joint Air Operations*, and Joint Publication 3-52, *Doctrine for Joint Airspace Control in a Combat Zone*, for details.)

(1) JFACC. The JFACC derives authority from the JFC who has the authority to exercise operational control, assign missions, direct coordination among subordinate commanders, redirect and organize forces to ensure unity of effort in the accomplishment of the overall mission. The JFC will normally designate a JFACC. The JFACC's responsibilities will be assigned by the JFC (normally these would include, but not be limited to, planning, coordination, allocation, and tasking based on the JFC's apportionment decision). Using the JFC's guidance and authority, and in coordination with other Service component commanders and other assigned or supporting commanders, the JFACC will recommend to the JFC apportionment of air sorties to various missions or geographic areas. (Joint Publication 1-02)

(2) ACA. The ACA is the commander designated to assume overall responsibility for the operation of the airspace control system in the airspace control area (Joint Publication 1-02). The ACA establishes and coordinates an airspace control system that responds to the needs of the JFC, provides for integration into the airspace control system of the host nation, and coordinates and deconflicts user requirements. The ACA develops and coordinates the ACP and after JFC approval, disseminates it throughout the JOA/AOR. Implementation of the ACP is through the airspace control order (ACO). (See Joint Publication 3-52, *Doctrine for Joint Airspace Control in the Combat Zone* for details.)

(3) AADC. Within a unified command, subordinate unified command, or joint task force, the commander will assign overall responsibility for air defense to a single commander. Normally, this will be the component commander with the preponderance of air defense capability and the command, control, and communications capability to plan and execute integrated air defense operations. Representation from the other components involved will be provided, as appropriate, to the AADC's headquarters (Joint Publication 1-02). The successful conduct of air defense operations requires the integrated operation of all available air defense systems. Air defense operations must be coordinated with other operations, both on and over land and sea. The AADC develops the area air defense plan and, after JFC approval, disseminates it throughout the AOR/JOA. (See Joint

Publication 3-52, *Doctrine for Joint Airspace Control in the Combat Zone* for details.)

(4) Service Component Commands. A service component command consists of the Service component commander and all those Service forces, such as individuals, units, detachments, organizations, and installations under the command, including the support forces that have been assigned to a combatant command, or further assigned to a subordinate unified command or joint task force. (Joint Publication 1-02)

(5) Liaison Officers. Component commanders and their subordinate commands and organizations provide liaison officers/representatives throughout the ICAC2 system. These liaison officers are personal representatives of their organization's commander, and perform the basic functions of monitoring, coordinating, advising, and assisting. The number of liaison officers required, their experience levels, and their location are determined early in the implementation phase as the ACA organizes to support the airspace control function.

Chapter II
PLANNING, IMPLEMENTATION, AND EXECUTION

1. Background

This chapter describes the process for combining key assets and players into a viable airspace control system. Specifically, required actions are covered in sufficient detail for the JFC, ACA, component commanders, and their staffs to plan, implement, and execute the airspace control function in joint and multinational operations.

2. Planning

a. Considerations. During the planning process, planners should consider time constraints, preliminary preparation, available Service or functional component resources, and the situation assessment when they develop the ACP. Other concerns include familiarity with the basic operation plan, knowledge of host and multinational political constraints, the capabilities and procedures of military and civil air traffic control systems, and the general locations of friendly and enemy forces. The ACP is the centerpiece of the ICAC2 system. The ACA generates the ACP, in coordination with the component commanders. The ACP provides specific planning guidance and procedures for the airspace control system. It summarizes the JFC's guidance on airspace control, defines the joint force airspace control organization, outlines the airspace control process, and, if authority is delegated, explicitly defines the responsibilities delegated to each of the components. Following approval by the JFC, the ACA issues the plan to appropriate agencies, to include component commanders.

b. ACP Development. Normally, the ACP is issued either as a part of the air tasking order (ATO) or as a separate document. Figure II-1 provides a sample outline to aid in developing the ACP. Chronological tasks that the JFC, ACA, component commanders, and their respective staffs must accomplish are detailed therein.

SAMPLE AIRSPACE CONTROL PLAN FORMAT

I. Promulgation Instruction
   - A. Effective Times
   - B. Plan Synopsis
   - C. Implementation

II. Table of Contents

III. Changes

IV. Basic Document
   - Annex A - Airspace Control Measures
   - Annex C - Special Procedures
   - Annex D - Functional Responsibilities
   - Annex E - Airspace Control Measure Request Airspace Control Order Promulgation Procedures
   - Annex H - Transit Routing Procedures
   - Annex I - Coordination Procedures for Air Operations Outside Activated Airspace Control Measures
   - Annex J - Diagrams of Airspace Control Measures
   - Annex K - Communications Requirements
   - Annex L - Abbreviations and Definitions
   - Annex M - Distribution

Figure II-1. Sample Airspace Control Plan Format

(1) Time Constraints. The joint force's success in meeting all of its objectives and completing the assigned mission is directly proportional to the level of preparation. While every contingency cannot be anticipated, early preparation can make the difference between success and failure. Planning the airspace control function in sufficient detail before the outbreak of hostilities is especially important, as the plan provides airspace coordinators and users clear, simple instructions for an orderly transition throughout all phases of the operation.

(2) Preliminary Preparation. The formulation of airspace control guidance by the JFC, development of broad policies and procedures by the ACA and coordination with component commanders is essential. (See Joint Publication 3-52, *Doctrine for Joint Airspace Control in the Combat Zone*, for details.) Although not formal in nature, airspace guidance takes form when the JFC and his staff accomplish the following:

(a) Prioritize missions, outline restrictions, and develop risk acceptability parameters. The JFC's plans provide subordinate component commanders with broad guidance on how to integrate their capabilities. The subordinate component commanders, in turn, use this guidance to meet the JFC's overall objective. This guidance clearly defines how much coordination, integration, and regulation of the airspace over the AOR/JOA is required to support the campaign plan.

(b) Define the airspace control area. The airspace control area is the basic geographical element of the airspace control system. Its lateral limits define the area in which airspace control procedures apply. The size of the area is based on factors such as the anticipated AOR/JOA, degree of integration with HN, multinational participation, and location and degree of protection required for logistical routes.

(c) Designate the ACA. The JFC may assign overall responsibility for airspace control in the theater to a component commander. Since the responsibilities of the JFACC, AADC, and ACA are interrelated, the JFC should carefully consider the operational impact of separating these functions. (Note: Joint Publication 3-56.1, *Command and Control for Joint Air Operations*, states that "normally these functions are assigned to one individual" and Joint Publication 3-52, *Doctrine for Joint Airspace Control in the Combat Zone*, states "…ACA and AADC duties should normally be performed by the same person, who may also be the JFACC.")

(3) Situation Assessment. Based on the JFC's guidance, the ACA and his/her staff, with the support of the component commanders, assess other factors that affect the airspace control architecture.

(a) Enemy Air and Air Defense Threat. Whether or not the ACA is also the AADC, enemy air and air defense capabilities must be appraised, and its impact on friendly use of the airspace in the theater of operations considered.

(b) Friendly Airspace Control Capabilities. Prior to assigning airspace control sectors, the ACA must evaluate each component commander's ability to plan, coordinate, integrate, and regulate airspace.

(c) Interface Requirements. The ACA must usually work within the confines of HN agreements, consider the integration needs of multinational forces, and consider possible unique missions of other agencies.

• HN. Based on HN agreements generated at the joint force level or above, the ACA must determine what impact the agreement will have on the operation. The ACA must also consider the system capabilities and limitations of the multinational forces (i.e., aircraft self-identification capabilities) and HN surveillance and defense radar systems.

• Multinational Forces. The ACA must integrate multinational forces, to include their airspace user needs and organic resources that can be integrated into the ICAC2 system. In multinational operations, the same considerations of assigning a JFACC, ACA, and AADC should apply. These considerations can be addressed in the special instructions (SPINS) and rules of engagement (ROE) approved by the JFC.

• Unique Missions. Although most missions requiring airspace are generated and directed by subordinate component commanders within the joint force, a requirement may exist for an outside agency to execute unique missions in the AOR/JOA. Examples of unique missions include flights by a civilian airline, a nation not involved in operations, or the United Nations for humanitarian reasons. The ACA needs to establish an airspace control system that can accommodate and integrate such requirements.

3. Implementation

a. Considerations. Following the situation assessment, the ACA, in concert with the component commanders, builds the airspace planning and control organization and develops the process for coordinating, integrating, and regulating the airspace control functions. This phase is complete when the JFC approves the ACP.

b. ACA Organization. The ACA's staff is derived from the senior C2 element (Air Force air operations center [AOC], Navy tactical air control center [TACC], or Marine Corps tactical air command center [TACC]) and liaisons from the individual components and multinational forces.

c. Airspace Control Sectors. Based on each component's capability and the scope of the operation, the ACA may elect to divide the airspace control area into several airspace control sectors. The boundaries of the proposed airspace control sectors should normally coincide with those of the air defense regions. The ACA should clearly define the amount of control each sector airspace control authority has over its assigned area. The degree of control held at higher echelons of command is situation-dependent, and is reliant on their ability to maintain situational awareness and communicate orders.

d. Airspace Control Process. Once the ACA integrates the joint/multinational airspace C2 systems, the next step is to define the airspace control process. This process begins with the JFC's determination of the degree of acceptable risk in controlling airspace users, which the airspace control methodology (degree of positive and/or procedural control) to use, and the means required to institute planned control measures, when required. (Note: Some

existing operation plans [OPLANs] contain standing ACPs for their respective area of operations [AO] and they may be used as a reference for developing the required ACP.)

(1) Breadth of Control. The airspace control area defines the geographical boundaries for airspace control procedures. Airspace control methods in the theater of operations may be positive, procedural, or a combination of both, depending on the overall situation. Positive control (electronic means) is the preferred option, providing the maximum safety and efficiency for airspace users. When positive control is not possible, procedural methods (non-electronic, i.e., time, vertical or lateral separation) are used to allow identification of friendly aircraft, minimize delays in offensive operations, and prevent fratricide. The ACA should develop a list of procedural ACMs. The list should be based on those ACMs jointly agreed upon by Service components as standards in the United States message text format (USMTF) ACO. Figure II-2 is a partial list of ACMs for use in military operations and should be familiar to most airspace users. See Appendix F and Joint Publications 3-52 and 3-56.1 for details.

Procedural Airspace Control Measures

- Air Defense Identification Zones (ADIZ)
- Coordinating Altitude (CA)
- High-Density Airspace Control Zone (HIDACZ)
- Low Level Transit Routes (LLTR)
- Minimum Risk Routes (MRR)
- Restricted Operations Area and Restricted Operations Zones (ROA/ROZ)
- Return-to-Force (RTF) Profile*
- Special Operations Forces Operating Areas
- Special Use Airspace
- Standard Use Army Aircraft Flight Routes (SAAFR)
- Weapons Engagement Zones (WEZ)
  - Base Defense Zone (BDZ)
  - Fighter Engagement Zone (FEZ)
  - Joint Engagement Zone (JEZ)
  - Missile Engagement Zone (MEZ)

* NOTE: The RTF profile may create errors in the Contingency Theater Automated Planning System (CTAPS)/Theater Battle Management Core System (TBMCS).

Figure II-2. Procedural Airspace Control Measures

(2) Means of Control. When procedural ACMs are established, they reserve airspace for and control the actions of airspace users. Establishing most procedural ACMs requires approval of the ACA. Some component-specific ACMs do not require ACA approval (e.g., standard use Army aircraft flight routes [SAAFR]). Therefore, the ACA must institute a system to process these requests, deconflict requests with other users, provide timely notification of approval or disapproval, and disseminate the measures to all airspace users. Airspace control requests are submitted through each component's senior airspace control element to the ACA for processing. USMTF is used to facilitate and standardize the process

of requesting the establishment of the ACMs. Each component uses the airspace control means request (ACMREQ) format to request ACMs.

e. Airspace Deconfliction Procedures. Component commanders should consolidate and deconflict their organic airspace user requests before they submit them to the ACA. All component ACMREQs are consolidated and, if a conflict occurs, the ACA follows established procedures to resolve the conflict. After coordinating with the appropriate component commands, the ACA normally resolves the conflict by one of several methods: time separation, altitude separation, relocation of one of the airspace users, or acceptance of the risk. Conflicts that the ACA cannot resolve are forwarded to the JFC and adjudicated in accordance with JFC guidelines.

(1) Centralized Control. Centralized control is the vesting of authority in one commander for planning and directing operations of all air forces throughout the AO. This centralized planning and direction enables timely allocation and tasking of assets to exploit the speed, range, and flexibility of air capabilities across the entire area. In air defense, centralized control is the control mode whereby a higher echelon makes direct target assignments to fire units. Centralized tasking and allocation of resources is accompanied by progressive decentralization of task control (as opposed to command by negation, which progressively pulls authority back from subordinate echelons, as required). The AADC may delegate identification and engagement authority to the regional air defense commander (RADC) or sector air defense commander (SADC) during centralized control operations.

(2) Decentralized Control. Decentralized control is the mode whereby a higher echelon monitors unit actions, making direct target assignments to units only when necessary to ensure proper fire distribution or to prevent engagement of friendly aircraft.

(3) Autonomous Operations. A unit assumes autonomous operations after it has lost all communications with higher echelons. The unit commander assumes full responsibility for control of weapons and engagement of hostile targets. Autonomous operations are conducted in accordance with the weapons control status (WCS) established by the AADC in the joint air defense plan.

4. Execution

a. Background. While the ACP provides general guidance on the airspace control function, the ACO implements airspace control procedures for specified time periods. Normally, the ACO is published and distributed daily and contains modifications to guidance and/or procedures in the ACP. The ACP activates and deactivates procedural control measures, and updates positive control procedures, including management of all transponder modes/codes.

b. ACO Development. Procedures for developing the ACO are included in the ACP. Normally, component commanders consolidate, deconflict, and forward their airspace requests to the ACA by a specified time for further consolidation with other theater-wide inputs. The ACA then integrates all input, resolves any conflicts among the components, and prepares the ACO for distribution.

(1) JFC. The JFC may elect to delegate specific airspace control authority to the component commanders through the ACA in the ACP. The JFC also may elect to task the component commanders to generate individual ACOs for their assigned sectors. Regardless, the ACA is tasked with providing continuity along sector boundaries and ensuring integration of each sector authority's ACO within the guidelines established in the ACP.

(2) ACA. The ACA remains responsible for airspace control for the entire JOA/AOR. The decision on whether to develop a single ACO or multiple ACOs will be situation-dependent. The ACA's recommendation, coordinated with the component commanders, should give careful consideration to payoffs derived versus the complexities of execution if multiple ACOs are used. Using multiple ACOs is not the normal way to handle airspace control, and a single ACO is the preferred option.

c. ACO Distribution. The ACO is distributed as part of the ATO or as a separate document. When distributing the ACO, two important considerations are timing and means of dissemination. If tied to the ATO, the same timing that is required for input to the ATO is required for preplanned airspace control requests. If the ACO is published separately, the ACA establishes suspenses to allow sufficient time for adequate planning, processing, and deconfliction. The ACP or ATO SPINS should include ACO publishing and suspense times. Whatever means are used, the airspace users must receive pertinent airspace information as soon as possible to include it in their mission planning efforts. Updates to the ACO are normally posted as changes to the original (initial) ACO. Although the ACO is intended to deconflict all air operations for a specific period of time, situations can arise that require immediate airspace deconfliction. To accommodate this requirement, the ACA establishes immediate airspace request procedures in the ACP. These procedures generally will require the requestor to notify the ACA of the intended operation as soon as possible to facilitate coordination and deconfliction. Clear, simple instructions in the ACO provide the basis for decentralized execution. At the same time, they minimize impact on operations and maximize the safe, efficient, and flexible use of airspace in the theater of operations.

d. Execution Procedures. Upon dissemination of the ACO, execution begins at the ACO effective time. Individual C2 nodes develop organic means to direct assigned forces in compliance with the ACO. C2 nodes also establish procedures to effectively implement any changes (immediate or otherwise) that the ACA directs or other components coordinate. Communications Linkage. Communications interoperability is the key to timely, reliable distribution of critical airspace information. Each component appendix (Appendixes A through E) identifies component interoperability and connectivity capabilities. Airspace planners must understand the capabilities and connectivity between critical airspace control nodes to ensure effective and efficient airspace usage. Figure II-3 lists the critical C2 nodes that execute the ACO.

CRITICAL NODES

- Air Force Air Operations Center (AOC)
- Air Force Air Support Operations Center (ASOC)
- Air Force Air Traffic Control Assets
- Air Force Airborne Elements of the Theater Air Control System (AETACS)
- Air Force Control and Reporting Center/Element (CRC/CRE)
- Air Force Special Tactics Teams
- Air Force Tactical Air Control Party (TACP)
- Airspace Information Center (Corps AIC and/or Division AIC)
- Army Air and Missile Defense Command (AAMDC)
- Army Air Traffic Services Assets
- Army Airspace Command and Control (A2C2) Element
- Army Battlefield Coordination Detachment (BCD)
- Army Deep Operations Coordination Cell (DOCC)
- Army Fire Support Element (FSE)
- Joint Air Operations Center (JAOC)
- Marine Corps Direct Air Support Center (DASC)
- Marine Corps Fire Support Coordination Center (FSCC)
- Marine Corps Tactical Air Command Center (TACC)
- Marine Corps Tactical Air Operations Center (TAOC)
- Navy Air Resource Element Coordinator (AREC)
- Navy Airborne Command and Control Elements (NACCE)
- Navy Supporting Arms Coordination Center (SACC)
- Navy Tactical Air Control Center (TACC)
- Air Defense Commander (ADC)
- Tactical Aviation Control Team (TACT)

Figure II-3. Critical Nodes

Chapter III
MISSIONS REQUIRING SPECIAL COORDINATION

1. Military Operations Other Than War (MOOTW)

a. Background. MOOTW encompasses a broad range of potential planning and operational factors affecting ICAC2. MOOTW can encompass the spectrum of national objectives supporting peacekeeping, deterrence, and transition to armed conflict. The complexity of requirements increases due to political sensitivity and restraints and the highly fluid nature of the MOOTW environment. The keys to providing effective ICAC2 in the MOOTW environment involve planning, implementing, and executing operations based on utility, flexibility, and scalability.

b. Utility. Based on the wide range of MOOTW missions, TTP must prepare forces to initiate and conduct operations in environments ranging from undeveloped theaters with limited infrastructures to highly developed theaters with complex infrastructures equal to or comparable to military capabilities.

(1) Environment. This environment may include US military assets pre-positioned as part of the MOOTW mission or participating in routinely scheduled training or exercises. The keys for effective ICAC2 development in the early stages are to—

(a) Identify the appropriate function required.

(b) Identify the appropriate resource to fill the requirement.

(c) Use all the resources made available by the JFC/JTF commander, including HN resources, coalition support forces, and other supporting allies. For example, the JFC's concept of operations often requires close liaison and coordination with the HN's air traffic and airspace control authority. This task is normally facilitated through the US Embassy, Office of Defense Cooperation.

(2) Air Traffic Control (ATC) Elements. ATC elements or their liaisons must be involved from the outset in planning and executing airspace management. They ensure airspace requirements are coordinated with and approved by the proper agencies. These units may participate in the development and integration of a HN airspace infrastructure. This could involve training HN ATC personnel or aviators on JTF ATC operations and procedures. ATC personnel may provide planning, terminal, airspace information, and forward-area support services to aviation assets conducting nation assistance.

c. Flexibility. Here, the term flexibility refers to the need to develop a plan appropriate for the current situation that must be capable of supporting all phases of the operation. The physical scope and complexity of MOOTW operations can radically expand and contract in response to political considerations, evolving threats, weather, and world opinion, as well as other factors. What began as a humanitarian mission can escalate into conflict, and revert to nation-building or peacekeeping within a short period of time. Therefore, ICAC2 planning should encompass the ability to withdraw and return the environment to a pre-crisis setting, especially where HN airspace control is involved.

d. Scalability. Rather than redesign TTPs specifically for MOOTW, ICAC2 TTPs must be scalable. For example, although the joint air operations center (JAOC) function may be needed, a scaled down version may be more appropriate to support a small-scale operation. The modular design, interoperability, and connectivity of each component's capabilities should be used to develop an efficient system, sized for the operation at hand. Participating units that require airspace to conduct operations in a deployed location must first validate their airspace requirements and coordinate with the proper agencies. This publication identifies component ICAC2 structures in Appendixes A through E. Units need to determine how to integrate into this system and actively deconflict their mission requirements.

2. Unmanned Aerial Vehicle (UAV) Operations

a. Background. UAVs are remotely-operated or autonomous aircraft that provide commanders the capability to conduct reconnaissance, intelligence, surveillance, and target acquisition (RISTA); battle damage assessment (BDA); and special operations missions. UAV systems include vehicles, ground control stations, and support elements. UAVs may be theater assets or assigned to tactical echelons. UAVs may be launched from and recovered on improved airfields, ships, or a forward launch and recovery site (LRS). Some UAVs may use more than one LRS. UAV mission profiles vary, depending on the type of air vehicle; however, like other aircraft, UAVs require airspace deconfliction. See Figure III-1 for a sample tactical UAV mission profile.

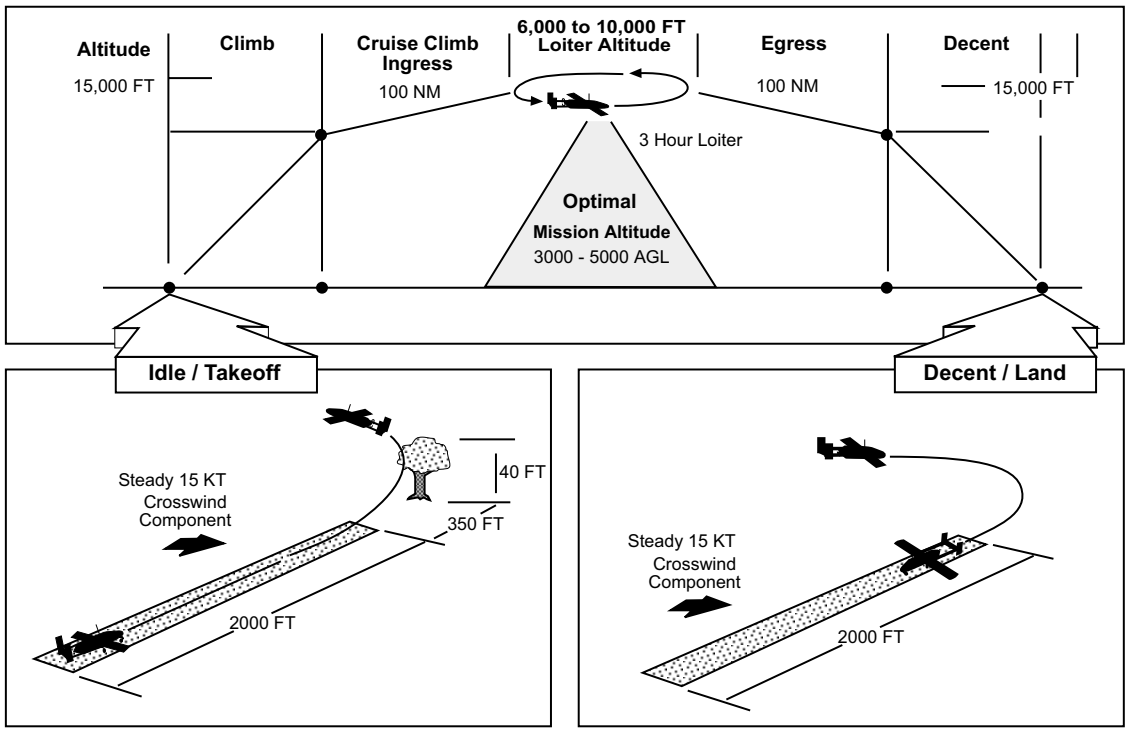

Figure III-1. Sample Tactical UAV Mission Profile

b. Deconfliction. Some UAVs are equipped with UHF/VHF radio communications and can be deconflicted like other airspace users. For UAV systems not equipped with direct communication between the UAV mission crew and other airspace users, procedural ACMs are a necessary part of operations. The following are reflected in the daily ATO, ACO, or SPINS and are disseminated to appropriate aviation and ground units or agencies: UAV missions; changes in LRS locations; UAV altitudes; operating areas; identification, friend or foe (IFF) squawks and check-in frequencies.

(1) Restricted Operations Zone (ROZ). To deconflict the UAVs and manned aircraft in the operations area, a UAV ROZ may be established. A UAV ROZ ("blanket" or "blanket altitude") is a block of airspace with defined lateral boundaries. These boundaries are designed to cover the operating area as required to allow flexibility in mission changes by not restricting the UAV and other aircraft that also must operate in the area, i.e., close air support (CAS) and reconnaissance. To reduce potential conflicts with rotary-wing aircraft, the UAV blanket altitude should be above the coordinating altitude. Aircraft penetrating the UAV ROZ to accomplish their missions will fly under see-and-avoid principles and accept the risk.

(2) Flight Routes. UAV flight routes and transit altitudes may be established and approved by the ACA based on the UAV's mission and in accordance with the ACP. Airspace control agencies advise all affected aircraft of UAV status. Figure III-2 shows the real-time concept of operations for deconflicting UAVs and other airspace users.

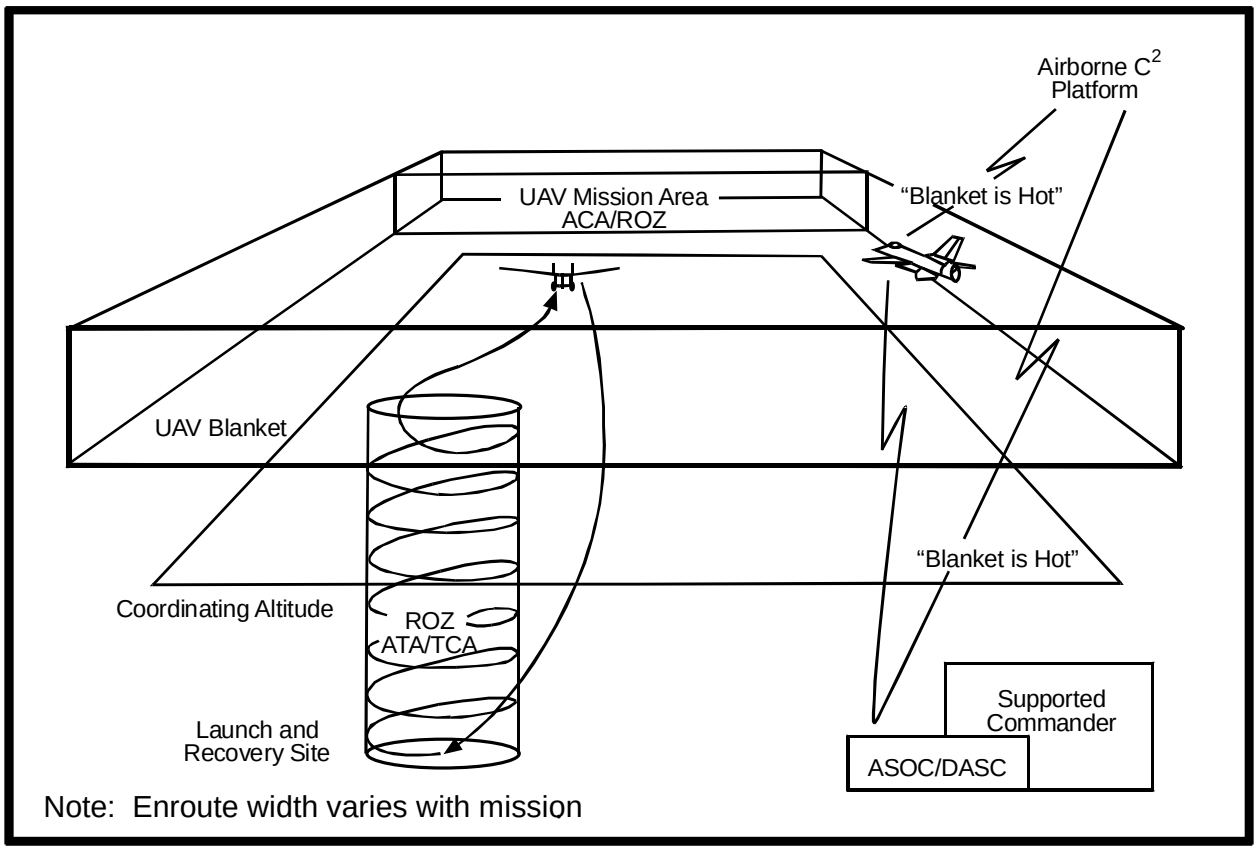

Figure III-2. Sample Unmanned Aerial Vehicle Protocols

3. Conventional Air Launched Cruise Missile (CALCM)

a. Background. The CALCM is designed to be a standoff weapon fired from a launch point on a pre-programmed flight profile to a designated target. The flight profile is based on the enroute threat to the weapon from launch point to target. CALCMs are capable of having both their flight profile and targets reprogrammed after launch.

b. Deconfliction. The CALCM has a small radar cross-section and is very difficult to accurately track with the normal radar units conducting theater airspace control. For this reason, positive control is not an effective means to deconflict CALCM operations from other air operations, and it is imperative that procedural ACMs be used for this deconfliction. Whatever procedural ACM is used, it must be identified in the ATO, ACO, or SPINS during the planning phase, or be deconflicted on a real-time basis. Procedural ACMs for CALCM might include:

(1) Establishing a ROZ from the launch point to the target.

(2) Establishing an extra wide air corridor that matches the CALCM's general flight profile from the launch area to the target.

(3) Using time deconfliction by employing the weapon at a time when the area from launch point to target is free of friendly aircraft.

4. Army Tactical Missile System (ATACMS)

a. Background. While modern technologies have greatly improved weapon systems, integrating their employment with existing or new technologies can be difficult, even impossible. The ATACMS is a good example. This weapon provides the JFC with a capability to strike deep targets.

b. Fire Support. Fire support is fires that directly support land, maritime, amphibious, and special operation forces to engage enemy forces, combat formations, and facilities in pursuit of tactical and operational objectives. (Joint Publication 3-09) Fire support includes mortars, field artillery (FA), cannons, rockets and guided missiles, and external means, including air support aircraft and naval surface fire support. Fire support operations may include the use of UAVs and early warning systems. Indirect fires pose a potential hazard to other friendly airspace users with the highest probability of conflict occurring at relatively low altitudes in the immediate vicinity of the firing unit and target location. Commanders incorporate fire support coordinating measures (FSCMs) to facilitate the rapid engagement of targets while simultaneously providing safeguards for friendly forces. Fire support coordination associated with Army airspace command and control (A2C2) occurs at all levels, from the fire support officer in the maneuver battalion command post to the operations staff elements at each tactical level. The G3/S3 ensures integration of the fire support mission through A2C2.

c. Deconfliction Planning Considerations.

(1) Launch Sites. When ATACMS firing positions are identified and their locations planned or determined, the artillery unit passes this information along with posture and status to the fire support element (FSE). The FSE then passes the information to the A2C2 element. The A2C2 element at the main command post (division/corps) coordinates, via the battlefield coordination detachment (BCD), for a ROZ for each ATACMS firing position. The ROZ may be rectangular with a length of 10 kilometers (km), width of 5-7 km, and a ceiling approximately 50,000 feet above ground level (AGL). These dimensions are only an example. The actual dimensions of the ROZ are situation-dependent based upon range to target and desired target area effects.

ROZs can be used to restrict air operations over ATACMS unit launch areas, also referred to as a position area hazard (PAH) airspace coordination area. Similarly, they can be used over predicted ATACMS munitions impact points, also referred to as a target area hazard (TAH) airspace coordination area. The JAOC, as agent for the ACA and in coordination with the BCD, similarly establishes a ROZ over the ATACMS firing position (PAH) and a ROZ over the surface target (TAH).

(2) Firing Positions. To decrease response time, PAHs may be computed and pre-coordinated using anticipated target locations and engagement areas. The employment tactic for ATACMS is "shoot and scoot," that is, fire from a planned position and move to another planned position to increase firing unit survivability. PAHs for all planned ATACMS missions should be published in the ACO. However, unplanned PAHs may be required to support the timely flow of the battle. Airspace planners must provide procedures for the immediate implementation of dynamic PAH on an as-needed basis. (**Note:** The joint definition of the fire support coordination line (FSCL) states that in exceptional circumstances failure to inform will not preclude the attack of targets beyond the FSCL. See Joint Publication 3-09.)

The ATACMS fire direction system computes the PAH (ROZ) based on the size and deployment of the ATACMS unit, desired exit altitude, and missile trajectory. This information is transmitted to appropriate agencies, such as the FSE and BCD, via the fire support system; e.g., Advanced Field Artillery Tactical Data System (AFATDS).

(3) PAH (Airspace Coordination Area) Shape. The shape does not have to be circular and varies from 3 km (1.5 nautical miles [NM]) to 10 km (5.5 NM) from unit center. The altitude of the PAH (airspace coordination area) generated, depicted, and distributed by the AFATDS is 10,000 meters. Coordination for these PAH and TAH occurs through fire support channels to the BCD, in coordination with A2C2 elements as necessary. See Figure III-3.

(4) En route Altitudes. There should be no requirement to clear the flight path of the missile between the PAH and TAH unless those altitudes are used. The high-altitude flight path characteristics of an ATACMS missile place it in a different category than classic indirect fire projectiles. By comparison, the missile's flight path is similar to that of a high-altitude, fixed-wing aircraft, with a maximum altitude of greater than 30 km (approximately 98,000 feet AGL). Total ATACMS missile time of flight between the PAH (ROZ) and TAH (ROZ) is 3 to 6 minutes.

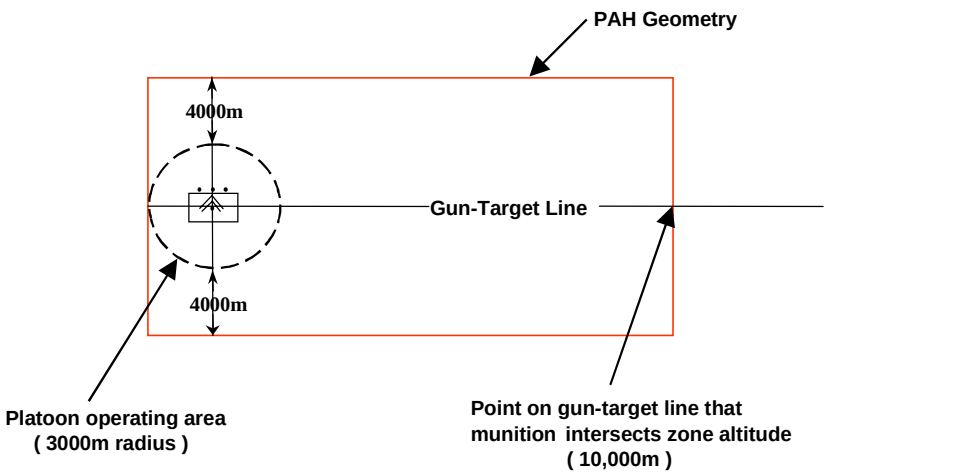

The ends of the area are drawn perpendicular to the gun-target line from side-to-side. The length of the area is the sum of the two values. The first value is the distance from the center of the platoon operating area to the point where the gun-target line (extended) intersects the rear of the platoon operating area. The second value is the lateral distance from the center of the platoon operating area to the point on the gun-target line where it intersects the zone altitude (10,000m). The sides of the area are given a platoon operating area of 3,000 meters and extending the sides an additional 4,000 meters. The height of the area is 10,000 meters. The geometry name will be the target number with a prefix of PAH.

Figure III-3. Position Area Hazard Airspace Coordination Area

(a) Target Area Deconfliction. TAHs follow the same principles and procedures as PAHs. See Figure III-4. The A2C2 element tailors the ROZ requests based on the posture and status of the launchers.

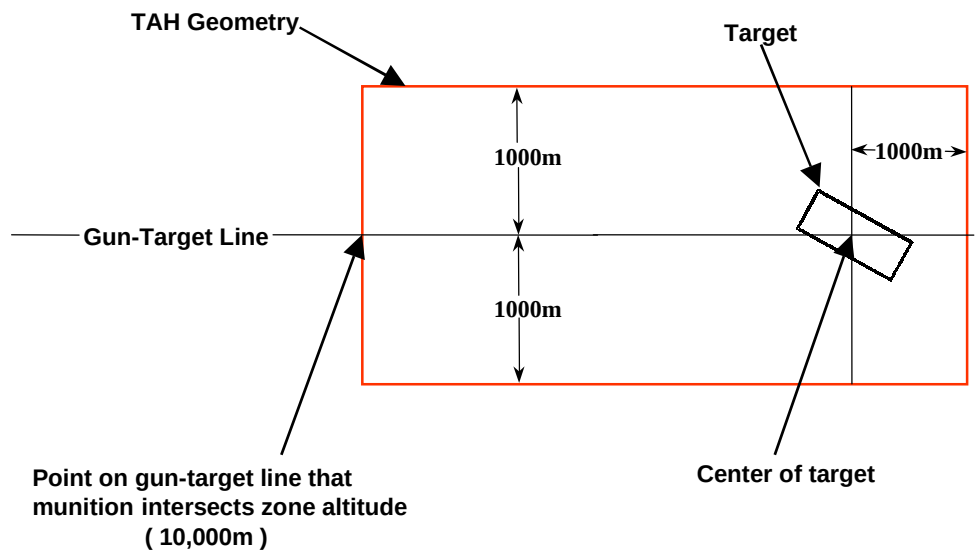

The TAH geometry is drawn with respect to the gun-target line. The sides of the area are drawn parallel to the gun-target line at a distance of 1,000 meters from the gun-target line. The length of the TAH will be the distance along the gun-target line from the point the munition intersects the zone altitude to a point 1,000 meters beyond the center of the target. The height of the area will be 10,000 meters. The geometry will be the target number with a prefix of TAH.

Figure III-4. Target Area Hazard Airspace Coordination Area

(b) Launch. ATACMS targets and employment are determined through the "decide-detect-deliver-assess" targeting process (FM 6-20-10). In the JOA, where artillery and aircraft share the same airspace, deconfliction is an integral part of that methodology. Airspace deconfliction should be addressed as part of the "decide" phase of the methodology. A trigger event (an enemy action that requires friendly reaction/fire) alerts the FSE to an impending ATACMS launch. The FSE immediately notifies the A2C2 element and air support operations center (ASOC) within the corps headquarters. The FSE, A2C2 element, and ASOC are integral to effective airspace C2. Collocation of these elements is imperative to facilitate rapid information exchange.

(5) FSE. The FSE focuses on the fire support/fire control system to attack the target. The fire support coordinator (FSCOORD), as a member of the A2C2 element, remains in the airspace deconfliction loop, providing critical feedback to the FSE.

(6) FSCL. The establishment of the FSCL is central to any discussion of airspace deconfliction when the decision is made to launch ATACMS. The FSCL is a FSCM used to expedite fires of air, ground, or sea weapons systems using any type of ammunition against surface targets. See Appendix F, Section 2 for information on integrating FSCMs and ACMs. By establishing the FSCL close in yet at sufficient depth so as to not limit high-tempo maneuver, land or amphibious force commanders ease the coordination requirements for attack operations within their AOs by forces not under their control, such as naval surface fire support (NSFS) or air interdiction. For more details, see Joint Publication 3-01, *Joint Doctrine for Countering Air and Missile Threats.*

(a) Beyond the FSCL. Coordination of attacks beyond the FSCL is especially critical to commanders of air, land, and special operations forces. Their forces may be operating beyond the FSCL or may plan to maneuver on that territory in the future. Such coordination also is important when attacking forces are employing wide-area munitions or munitions with delayed effects. Finally, this coordination assists in avoiding conflicting or redundant attack operations. In exceptional circumstances, the inability to conduct this coordination will not preclude the attack of targets beyond the FSCL. However, failure to do so may increase the risk of fratricide and could waste limited resources.

(b) High-Tempo Operations. In high-tempo maneuver operations, the FSCL may change frequently, such as every several hours. The establishing commander quickly transmits the change to higher, lower, adjacent, and supporting headquarters to ensure controlling agencies appropriately coordinate attack operations.

d. Immediate ATACMS Deconfliction.

(1) Inside the Land Component Commander's (LCC's) AO and Beyond the FSCL. The employment of ATACMS warrants airspace deconfliction both inside and outside corps boundaries, inside and outside the LCC's AO and short of and forward of the FSCL. ATACMS operations are usually planned or requested by a corps, echelon above corps, Service/component, or JFC.

(a) Deconfliction. Working in concert with the A2C2 element, the ASOC is able to deconflict CAS aircraft while the A2C2 element and its supporting airspace information center (AIC) rapidly deconflicts Army airspace users. Before notifying the BCD, the FSE must inform the A2C2 element that actions to launch an ATACMS have been initiated. The A2C2 element determines the Army airspace status and informs the ASOC. Because the ASOC knows the current status of CAS aircraft, the A2C2 input provides the ASOC a composite picture of the corps' airspace. The JAOC completes the coordination process with information on all remaining air missions in or transiting the area. Responsibility for deconfliction and clearance of transiting aircraft is passed from the ASOC to the JAOC. The control and reporting centers (CRCs)/control and reporting elements (CREs), ASOCs, forward air controllers (FACs), air liaison officers (ALOs), and AICs all have a continuing requirement, until the end of the ATACMS firing, to deconflict the airspace under the ACA/ JFACC's ACP guidance. The JAOC uses all appropriate C2 agencies to determine if aircraft are clear of the launch area, missile trajectory or flight path, and target area. The JAOC directs deconfliction if required, while informing the BCD and ASOC. When the airspace is clear, the JAOC notifies the ASOC, who in turn notifies the FSE.

(b) Responsibilities.

- The Corps FSE. The corps FSE notifies A2C2 and the ASOC of an imminent ATACMS launch.

- The Corps A2C2. The corps A2C2 notifies the BCD, using a G3 dedicated line. It determines if Army airspace users are clear, with the assistance of the supporting AIC. If clear, they notify the corps FSE. If not clear, they deconflict Army-use airspace and then notify the corps FSE.

- The BCD. The BCD ensures the launch and impact points are provided in latitude/longitude coordinates. The BCD requests and coordinates the timely approval of the airspace to accommodate these fires with the AOC airspace management element. If other airspace users are affected, they immediately advise the senior air defense officer and chief of combat operations and inform the A2C2 or ASOC of all results.

- The ASOC. The ASOC determines if CAS aircraft are clear. If not, it clears CAS aircraft using any available means—that is, direct communication, tactical air control parties (TACPs), and so forth, and notifies the JAOC to clear all other aircraft affected by the ATACMS launch.

- The JAOC. The JAOC determines if all other aircraft are clear. If clear, it notifies the ASOC. If not, it notifies all appropriate C2 agencies of an imminent ATACMS launch.

- The JAOC Airspace Cell. The JAOC airspace cell, upon notification of an imminent ATACMS launch, establishes a ROZ around the impact location and, if necessary, the launch location. It advises the BCD of airspace users impacted by the ROZ and, if required, assists the BCD with coordination within the JAOC. The JAOC airspace cell also sends out an immediate change to theater C2 agencies, if time permits.

• Theater C2 Agencies. Theater C2 agencies, when requested, clear all affected aircraft. If unable to contact all affected aircraft, broadcast a BULLSEYE call. (**Note:** Launch warning indicates ATACMS firing is imminent. Impact point is provided using map coordinates, latitude and longitude, or reference from navigational aids, etc. Appendix H provides information on the Bullseye Reference System.) They will notify the JAOC when all affected aircraft are clear or have been alerted.

• The JAOC. The JAOC, with confirmation from C2 agencies that all affected aircraft are clear or have been alerted, notifies the ASOC.

• The ASOC. The ASOC, when all affected aircraft are clear or have been alerted, notifies the corps FSE.

• The FSE. Both the A2C2 and ASOC notify the FSE that airspace users are clear or have been alerted.

(2) Outside the LCC's AO. Coordination of fires across boundaries should include airspace deconfliction. A commander may exercise freedom of fire and maneuver within his/her area. Indirect fire support may not deliver fires across a boundary unless those fires are coordinated with the responsible element within the boundary. For example, when a commander has identified a target that he/she desires to strike with ATACMS, and the target is located outside his/her area, the higher or adjacent commander (responsible agent) responsible for that area determines whether to attack the target. If the commander decides not to attack or is incapable of attacking the target, he/she approves the request and facilitates the attack of the target by deconflicting his/her airspace for the firing unit.

(a) Deconfliction. Deconfliction of airspace <u>outside</u> the LCC's AO is more complicated and requires additional time. The same protocol used for transiting aircraft within the ASOC's area can be applied to deconfliction outside the ASOC's area. Once airspace is cleared, the requesting authority is allowed to fire. Where airspace deconfliction is not possible, an assessment on target value, payoff, timing, and allowable risk must be made. If the risk is such that an ATACMS launch is necessary, the JAOC directs C2 agencies to broadcast the ATACMS launch/impact. The JAOC notifies the BCD and ASOC to relay ATACMS launch approval to the corps.

(b) Responsibilities.

• Corps. Corps requests permission from the responsible agent (i.e., joint force maritime component commander (JFMCC), JFACC, HN) to attack the target.

• The Responsible Agent. The responsible agent determines whether it has the capability to attack the target in time. If not capable, the agent determines whether the airspace is clear. If the airspace is clear, the agent will clear the corps to attack. If the airspace is not clear, the agent determines whether it can be cleared in time. If the airspace can be cleared in time, the agent clears the corps to attack. If the airspace cannot be cleared in time and target destruction is not a high priority, the agent notifies the corps that its request is deferred. If the airspace cannot be cleared in time and target destruction is a

high priority, the agent notifies the JAOC and clears the corps to attack when the broadcast call is confirmed.

• The JAOC. The JAOC notifies subordinate theater C2 agencies of an imminent ATACMS launch.

• Subordinate Theater C2 Agencies. Subordinate theater C2 agencies send a broadcast call.

• The Corps. The corps launches ATACMS into the responsible agent's AO when cleared.

e. ATACMS Requests From Other Components. When the BCD or FSE receives a request from another component to attack a target with ATACMS, the requesting component is responsible for airspace deconfliction in the target area.

5. Amphibious Operations

a. Background. Naval expeditionary operations integrate ships, aircraft, weapons, and a landing force (LF) in an attack against a hostile or potentially hostile shore. These operations exploit the elements of surprise and capitalize on enemy weaknesses by applying force at advantageous locations and opportune times. Amphibious operations consist of five phases: planning, embarkation, rehearsal, movement, and assault. The assault builds up combat power ashore from an initial zero capability to a fully coordinated combat capability. The operation always will include naval forces and a LF, each of which may have attached aviation. Although Air Force and Army units may participate, typically, an amphibious operation is executed predominantly by Navy and Marine combat units, each with its own C2 to support airspace control in the amphibious objective area (AOA). In amphibious operations, airspace control is a multifunctional effort, consisting of surveillance, warning, launch and engagement authority, air movement control, CAS, and communications.

b. Organization. Close cooperation and detailed coordination among all participants is essential to the success of the operation. The amphibious task force (ATF), normally a subordinate command within the unified command structure, is the organization formed to conduct the amphibious operation and provide this cohesion.

(1) Commander, Amphibious Task Force (CATF). The CATF, a Navy officer, controls all operations until the commander, landing force (CLF), the senior officer in the landing force (may be Marine Corps or Army), is established ashore. The CATF, in an amphibious operation, exercises control of all air operations in the AOA, including airspace control, until such functions are transferred to CLF ashore. The CATF, assigns specific tasks for functional activities to subordinate elements within the ATF. The CATF also establishes the amphibious tactical air control system (ATACS) to control air assets in the AOA and effect coordination of aviation assets with supporting forces.

(2) ATACS. The ATACS consists of two almost identical elements— the Navy tactical air control system (TACS) and the Marine Air Command and Control System (MACCS) discussed in Appendixes B and D. Each system accomplishes the same functions at different times.

(3) TACS. The primary air control agency within the AOA is the Navy tactical air control center (TACC afloat). An amphibious squadron (PHIBRON) air officer, usually a Navy aviation officer, is directly responsible to the CATF for overall operation of the Navy TACC. Whenever two or more Navy TACCs function within the AOA, one is designated the TACC and the others are designated as tactical air direction centers (TADCs) operating in specific AORs. Within the TACS, the following tactical agencies provide coordination and terminal control at the user level: TACPs, tactical air coordinators (airborne) (TACs[A]), and naval aviation observers. See Figure III-5.

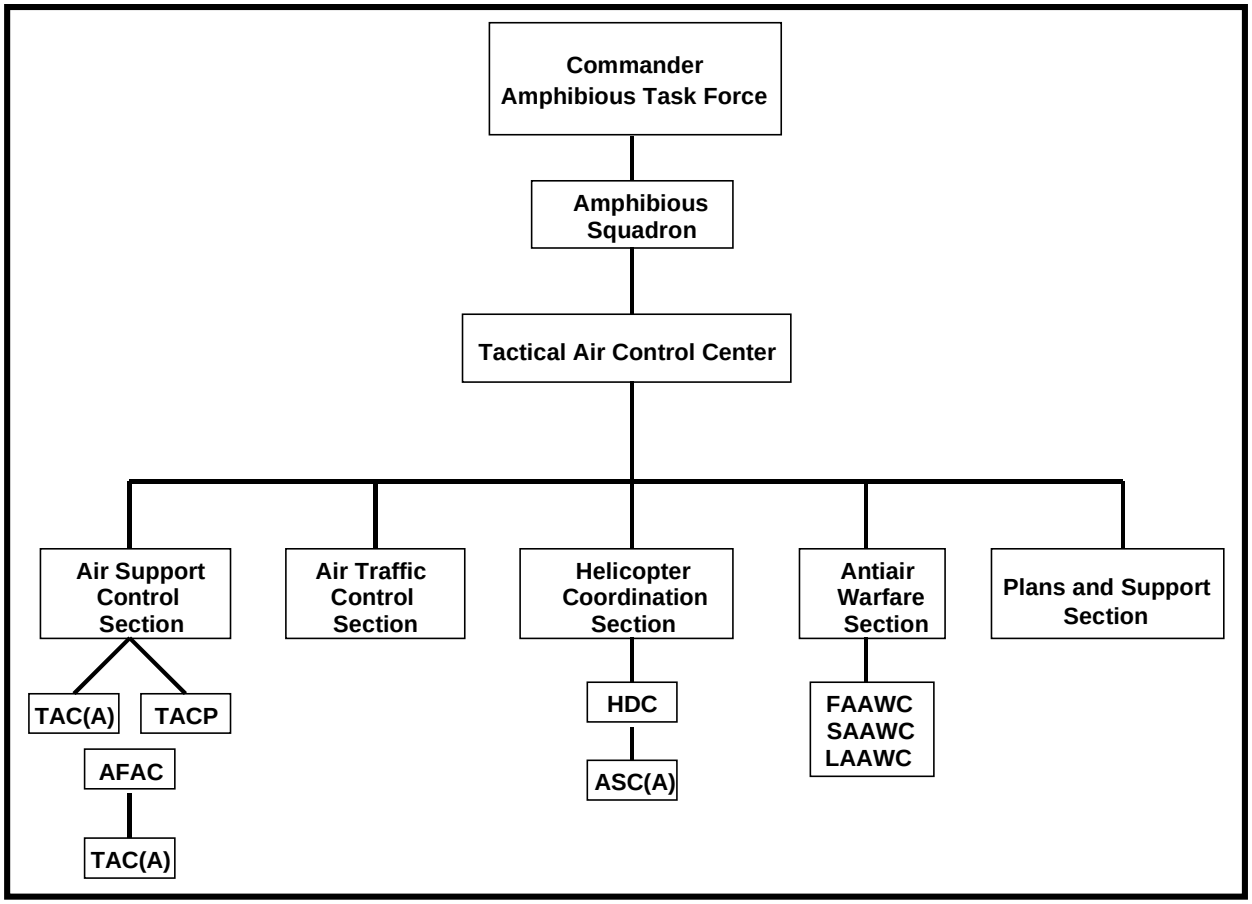

Figure III-5. Navy Tactical Air Control Center (Afloat)

(4) TADC. TADCs are established to control air operations during advance force operations when a fully operational TACC cannot be justified. Personnel from Navy tactical air control groups (TACGRUs) or tactical air control squadrons (TACRONs), embarked aboard the ATF flagship, operate the TACC. The TACC consists of five principal sections: plans and support, air warfare, air traffic control, helicopter coordination, and air support control.

(5) Helicopter Coordination Section (HCS). The HCS of the Navy TACC supports and coordinates helicopter operations through its subordinate helicopter direction centers (HDCs) and the assault support coordinator (airborne) (ASC [A]).

(6) Supporting Arms Coordination Center (SACC). Although not a part of the TACS, the SACC works closely with the Navy TACC to integrate both helicopter and fixed-wing air operations with supporting arms. The SACC is the naval equivalent of the Marine Corps fire support coordination center (FSCC). It is collocated with the air support control section aboard the ATF flagship.

(7) Helicopter Coordination Section (HCS). The HCS of the Navy TACC supports and coordinates helicopter operations through its subordinate helicopter direction centers (HDCs) and the assault support coordinator (airborne) (ASC [A]).

(8) Supporting Arms Coordination Center (SACC). Although not a part of the TACS, the SACC works closely with the Navy TACC to integrate both helicopter and fixed-wing air operations with supporting arms. The SACC is the naval equivalent of the Marine Corps fire support coordination center (FSCC). It is collocated with the air support control section aboard the ATF flagship.

(9) MACCS. The MACCS provides the CLF with the capability to command, control, coordinate, and manage the air assets supporting the ground elements of the landing force. The organization, responsibilities, and procedures are consistent with the description given in Appendix D.

(10) Marine TADC. The Marine TADC is established while the control of aviation assets ashore is phased to the CLF. During this time, while overall control of aviation assets is still afloat, the TADC is subordinate to the Navy TACC. Once the CATF passes control of aviation assets ashore to the CLF, the Marine Corps TADC becomes the Marine Corps TACC, and the Navy TACC reverts to a Navy TADC.

c. Responsibilities. For the amphibious assault operation, the JFC assigns an airspace of defined proportions to the CATF, which may include an AOA. If established, the CATF controls all operations in the AOA until transferred to the CLF. During the planning phase, the CATF, in conjunction with the CLF, establishes general airspace control procedures within the assigned airspace with the commander responsible for airspace control in the surrounding area. The CATF, after determining the extent of air control required, establishes the ATACS.

(1) Amphibious Ready Group (ARG) Key Planners and Coordinators. An ARG typically consists of a general purpose amphibious assault ship (LHA) or a general purpose amphibious assault ship (with internal docks) (LHD), an amphibious transport dock (LPD), and a landing ship dock (LSD). The PHIBRON commander and staff embark on the flagship. The PHIBRON staff is augmented by a TACRON detachment, which operates the TACC.

(2) CATF. The CATF is the ARG commander and may carry the title of *Commodore*. CATF exercises control of all phases of the operation with the exception of the planning stage, during which time responsibilities are shared with CLF.

(3) PHIBRON Operations and Plans Officer. This staff officer supervises and coordinates all operational tasking of the ARG, and is specifically responsible for the development of the ARG operation orders (OPORDs), OPLANs, schedule of events, and letters of instruction. These documents are used to issue the ARG commander's operational requirements for a specific operation or period of time.

(4) PHIBRON Air Officer. The TACRON detachment officer in charge (OIC) serves as the PHIBRON air officer and is directly responsible to the ARG commander for air operations in support of the amphibious operations. Duties include the coordination of planning and control over all phases of air operations, air support, air defense (AD), helicopter operations, air intelligence, and air control. The PHIBRON air officer is responsible for the overall operation of the TACC and fulfills the duties and responsibilities of ACA for the ARG.

(5) TACC. The TACC is the amphibious airspace control agency. It is responsible for all air operations in support of the ARG and is functionally organized into five sections:

(a) Air Traffic Control Section (ATCS). The ATCS coordinates and controls all air traffic entering, leaving, operating within, or traversing the assigned airspace.

(b) Air Support Control Section (ASCS). The ASCS coordinates and controls offensive air support (OAS), to include CAS, deep air support (DAS), and other air operations.

(c) Air Defense Section (ADS). The ADS coordinates and monitors the force, sector, or local AD commander (force air defense commander [FADC], SADC, and local area defense commander [LADC]) activities for the TACC. The ADS can also function as ARG air defense commander.

(d) HCS. The HCS coordinates all helicopter operations conducted by the HDCs.

(e) Plans and Support Section (PSS). The PSS provides all communications support and conducts all current and future planning for aviation support.

(6) Helicopter Coordinator (HC). The HC is a naval aviator who heads the air plans and support section of the TACC. The HC organizes and publishes the ARG air plan, and submits ATO inputs and air support requests (AIRSUPREQ) to the JFACC or the aircraft carrier battle group (CVBG) strike operations. The HC also publishes the ARG ATO when operating independently of JFACC or carrier battle group (CVBG).

(7) Air Support Coordinator (ASC). The ASC is a naval aviator with air-to-ground strike experience responsible for advising the SACC on the employment of airpower. The ASC receives and consolidates daily planned air support requirements; i.e., CAS, and acts as the interface between the SACC and TACC for planning and execution. The ASC also coordinates requirements with the SACC and presents them to the TACC for assignment and entry in the daily ATO. During operations on land, the ASC receives air support requests from forces ashore and incorporates those requests into the daily ATO.

(8) Tactical Air Traffic Control (TATC). The TATC is responsible for the safe and expeditious handling of aircraft during flight operations within ARG-assigned airspace. TATC functions mirror those of the CVBG strike control.

(9) Tactical Air Direction (TAD) Controller. The TAD controller controls all aircraft assigned to CAS holding stacks, assigns missions and targets of immediate missions via 9-line briefs, and records and disseminates BDA. The TAD maintains communications with the FAC and forward air controller (airborne) (FAC[A]).

(10) SACC. SACC exercises overall coordination of supporting arms planning and execution. Supporting arms include surface, land, and air-launched weapons of all types employed to support ground units. The SACC integrates fire plans of the supporting arms in support of naval operations and the landing force scheme of maneuver. The SACC also receives fire support requests and assigns fire missions to CAS, naval gunfire, or artillery.

(11) Air Operations Control Center (AOCC)/HDC. The AOCC/HDC is the LHA/LHD operations department/division equivalent to the CVBG air operations division. This center is responsible for safe and efficient aircraft arrival and departure. A Marine Corps aviator with recent at-sea experience normally heads the AOCC/HDC.

(12) PHIBRON Air Officer. This officer sets up the TACS and is responsible for all operations in the TACC. TACC functions include:

(a) Making effective use of all aircraft assigned. In an amphibious operation, the TACC accomplishes the functions of the air resource element coordinator (AREC).

(b) Ensuring defense of ships and troops of the ATF against enemy air, submarine, and surface attacks within the assigned airspace through integrated planning of all air operations. **Note**: The CATF operates under the composite warfare concept and therefore divides protection of his forces into these three categories. Each subordinate warfare commander operates from a combat information center (CIC)—the responsible agency within a ship for collection, display, evaluation, and dissemination of tactical information. However, unlike the composite warfare commander (CWC) in a blue-water operation, the AD function is incorporated in the TACC. AD functions include:

- Providing CAS and other air support as requested.
- Consolidating tactical air support requirements.
- Monitoring and coordinating all helicopter operations.
- Exercising coordination and control of all air traffic in the assigned airspace.

(13) CLF. The CLF, in conjunction with the CATF, establishes general airspace procedures. The CLF establishes the MACCS, and, when firmly established ashore, accepts the transfer and control of air operations from the CATF.

(14) MACCS. The MACCS functions and responsibilities are described in Appendix D.

(15) ARG Air Planning Matrix. Table III-1 presents the major units contained in the ARG and their functions pertinent to air planning.

	Planning	Operations
PHIBRON Operations	• Develops OPORDs, etc. • Creates SOE/Greensheet • Long range planning	• Coordinates surface assault • Supports NSFS requirements • Surface fire coordinator
PHIBRON Air Officer	• Functions as amphib ACA • Coordinates outside air supp requirements • Publishes amphib ATO/ air plan • Directs the TACC	• Coordinates TACC/SACC • MEU air support requirements • Coordinates emergent air requirements • ARG Air Defense Commander
TACC	• Implements air support plans • Creates airspace management plan • Coordinates air support missions	• Controls aircraft in amphib airspace • Updates mission briefs • Conducts nine line briefs • Receives BDA reports • Directs air defense as AD sector control • Coordinates air assault • Assigns aircraft to FAC
SACC	• Identifies fire support requirements • Identifies fire support coordination measures	• Processes fire support requests • Coordinates all emergent fires with TACC
AOCC/HDC	• PublishesLHA/LHD air plan • Identifies ordnance/troop load plan requirements	• Controls all arriving and departing aircraft • Controls IFR approaches to LHA/LHD

Table III-1. ARG Planning and Operations

(16) Marine Expeditionary Unit (MEU) Special Operations Capable (SOC) (MEU [SOC]) Key Planners and Coordinators. The MEU (SOC) is the forward-deployed, immediate response, sea-based Marine component of the fleet commander's amphibious and power-projection forces. A MEU (SOC) is task-organized, trained, and equipped to conduct a wide variety of conventional and specialized operations. It is not large enough to be used for deliberate amphibious assault. The MEU typically consists of four integrated elements:

(a) Command Element (CE). The CE provides a single headquarters for command and coordination of ground, air, and combat support forces ashore.

(b) Ground Combat Element (GCE). The GCE is an infantry battalion reinforced by light armored reconnaissance, tanks, artillery, assault amphibious vehicles, combat rubber raiding craft, and combat engineer units that form a battalion landing team. The GCE commander is the battalion landing team commander. This is the main ground combatant force within the MEU.

(c) Aviation Combat Element (ACE). The ACE is a single composite reinforced squadron. The ACE is task-organized to provide aviation support for the MEU (SOC) mission, adding flexibility, firepower and mobility. C2 of organic MEU (SOC) aviation assets is governed by Joint Publication 0-2, *Unified Action Armed Forces*, which states in part: "The MEU (SOC) commander will retain operational control of organic air assets." The MEU (SOC) is typically composed of 12 CH-46s, 3 CH-53s, 3 UH-1s, 4 AH-1s, 6 AV-8s, 2 continental United States (CONUS) based KC-130s, a Detachment Marine Wing Support Squadron (MWSS) and a Detachment Marine Air Control Group (MACG).

(d) Combat Service Support Element (CSSE). The CSSE provides logistics and communications support.

(17) MEU Commander/CLF. The MEU commander, a Marine colonel, is responsible for determining the requirements for ship-to-shore movement, including: availability of landing force helicopters, organic landing craft, and amphibious vehicles; preparing landing force OPLANs; and overall execution of all missions.

(18) MEU Air Officer. This officer plans and consolidates MEU support and training requirements for air planning and inclusion into the daily air plan or ARG ATO input.

(19) FAC. The aviator member of the TACP who, as a FAC or FAC(A), terminally controls CAS aircraft.

(20) DASC. See Appendix D for a description of the DASC.

(21) MEU (SOC) Air Planning Matrix. Table III-2 depicts the major planners from the MEU (SOC) and their responsibilities.

d. Role of TACC. TACC is the center for all planning and execution of amphibious air support missions, including the coordination of sea- and shore-based air units supporting the amphibious operation. The TACC and all LHA and LHD class ships have contingency theater automated planning system (CTAPS) terminals installed. **Note:** The Theater Battle Management Core System (TBMCS) is the follow-on system for CTAPS.

(1) Planning. During the planning phase of an amphibious operation, TACC personnel perform the following functions:

(a) Work closely with the MEU air officer to ensure that missions are fully coordinated between Navy and Marine air elements.

(b) Establish or recommend ACMs to support amphibious missions.

(c) Design helicopter lanes to and from the landing zones with the Marine air mission commander, transport flight lead, and escort flight lead.

(d) Determine and implement optimal FSCMs, CAS holding points, etc. with the Marine FSE.

	Planning	Operations
MEU(SOC) Commander Command Element	• Reviews taskings • Identifies forces • Establishes tactical goals • Initiates R2P2	• Identifies support requirements • Coordinates outsides requirements
MEU Air Officer	• Identifies air support requirements to TACC • Identifies mission requirements with LHA/LHD	• Coordinates emergent air support requirements
ACE Commander	• Establishes air tactics • Oversees training and readiness of composite squadron	• Mission execution
GCE Air Officer	• Collects identified targets • Creates fire support plan	• Coordinates direction of fires • Establishes priority of fires
FAC	• Identifies potential targets	• Controls and directs application or airpower in support of GCE

Table III-2. MEU(SOC) Air Planning and Operations

(e) Ensure airspace assignments support the scheme of maneuver in sea echelons for amphibious ships and balance competing requirements for airspace.

(f) Initiate AIRSUPREQ for carrier (CV) and land-based aviation assets.

(g) Communicate with CVBG strike operations and carrier air wing commander (CAG) operations on planning details submitted by the CATF/CLF.

(h) Coordinate AD procedures for ARG assets with the AD commander.

(i) Provide daily amphibious air plan and ATO inputs to CVBG strike operations as directed by the tactical situation and the JFACC's C2 architecture. This information is provided to strike operations for inclusion in an ATO input to the JFACC. Publish daily ATO when ARG/MEU conduct autonomous operations.

(j) Ensure the ACP and ACOs meet operational requirements.

(2) Execution. The TACC oversees all ARG airspace assigned by the ACA under the ACP. The TACC acts as the controlling agency for any ACMs encompassing the littoral operations because of the close coordination required by Marine ground forces. The TACC controls the ARG/MEU aircraft for all or part of their mission. Aircraft operating within the ARG/MEU-assigned airspace check in with the TACC prior to assignment to a mission controller. Aircraft transiting ARG/MEU airspace require positive control to ensure deconfliction, fratricide avoidance, and general safety of flight. The TACC accomplishes the following:

(a) Remains linked with other air control units as designated in the ACP.

(b) Maintains a complete air picture of the combat zone with SACC.

(c) Attempts to maintain air coordination communications links with the CVBG.

(d) Works with the SACC to optimize and deconflict all CAS, NSFS and artillery missions.

Note: Because the TACC is so closely involved with the SACC during execution of all amphibious fires, it is uniquely positioned to provide situational awareness to any aircraft flying in support of or near the amphibious operation. It is essential for airborne early warning (and other air control units) to remain in contact with TACC, call sign "ICEPACK," when controlling aircraft in, or immediately adjacent to, an amphibious operation.

e. Air Support Planning Timelines.

(1) Introduction. As a global force-in-readiness, the MEU (SOC) is organized, trained and equipped as a self-sustaining general purpose expeditionary force capable of conducting a wide spectrum of conventional and selected maritime special operations. The unique immediate response utility of the MEU (SOC) requires that it be capable of commencing mission execution within 6 hours of receipt of a warning or alert order. Commencement of mission execution is signified by the launch of forces by air and/or surface means. This may range from the insertion of reconnaissance and surveillance assets to the launch of an assault force.

(2) The Rapid Response Planning Process (R2P2). The R2P2 provides the geographic combatant commander with a forward-deployed, rapid crisis response capability. The R2P2 works very well for ARG/MEU "stand-alone" missions. For missions requiring outside air support, however, it can be difficult to request, coordinate, and brief with all the external agencies (JFACC, strike operations, strike lead, etc.), and remain within the six-hour time limit. This has caused considerable confusion and generated planning difficulties during exercises involving amphibious operations.

(3) Procedures. Navy-Marine Corps procedures include formal and informal techniques that facilitate the passing of C2 from afloat (CATF) to ashore (CLF). These procedures ensure an uninterrupted C2 structure throughout combat operations. The organization, policies, and procedures used reflect basic Navy and Marine Corps doctrine—centralized command, coordination, and supervision at the highest level and decentralized control to the lowest level. Centralized command authority provides the timely shift of air operations and economizes the use of aviation assets, while decentralized control minimizes response times and provides greater access to the assets. The Navy and Marine Corps air control systems are functionally parallel in order to provide continuity in air control from afloat to ashore and shift command authority with ease as the operation progresses.

(4) Positive Versus Procedural Control. Air operations in an amphibious operation are intense and time-critical. As a result, emphasis is placed on positive control of air traffic, commensurate with the communications and identification means available.

(a) Transfer of Air Control from Afloat to Ashore.

• Situation. During amphibious operations control passes through several key commanders as operations progress. Prior to arrival of the ATF, an advance force may

prepare the objective for assault. The commander of this force usually has a TADC to command and control the air operations. The advance force commander is under the command of CATF and is delegated operational command authority over those forces specifically assigned.

• ATF Arrival. When the ATF arrives in the AOA, the advance force is dissolved and air direction, coordination, and control shifts from the TADC to the Navy TACC. Once the assault begins, TACPs under the Navy TACC accompany the landing force as it moves ashore. Once functional afloat TADCs have been established, the TADC controls the TACPs, giving the CLF early access to the air control system.

• Progression of the Operation. As the amphibious operation progresses, the CLF incrementally increases the air C2 systems (MACCS) ashore and accepts responsibility for various functions from the CATF. As soon as the tactical situation ashore permits, the CLF establishes an air support element /DASC ashore, again operating under the TADC for air support operations.

• Establishing the TADC and the tactical air operations center (TAOC). A TADC and a TAOC are established ashore, giving the CLF the capability to control and direct both offensive air and AD operations. Initially the Navy TACC will define a sector over which the Marine TADC has control of OAS and AD operations.

• LF. As the LF progresses inland and more units are landed, the landing force increases its organic capability to control and execute air operations. When the CLF and CATF agree, the responsibility for control of all air operations is passed ashore to the CLF. The Marine TADC becomes the Marine TACC, and the Navy TACC either phases out completely or is redesignated as the Navy TADC. Transfer of airspace control responsibility normally occurs simultaneously with the transfer of AD responsibility. See Figure III-6. Upon termination of the amphibious operation, as defined in the initiating directive, the assigned airspace is disestablished and airspace control is returned to the ACA or as stated in the initiating directive.

f. Integration with AD. Gaining air superiority during an amphibious operation is of utmost importance. The CATF employs both Navy and Marine Corps assets to execute the antiair warfare function. Since the CATF has limited AD capability, a battle group operating in support of the ATF normally provides additional AD support, including air interceptors, surface-to-air missiles and airborne early warning aircraft. Positive and procedural control is used not only to manage the airspace, but also to provide an effective air defense umbrella without encumbering the air operations in support of the assault.

g. ARG/CVBG Integration. ARG/CVBG integration involves understanding the functions and organizational responsibilities of the aircraft carrier with the battle group and with the TACRON detachment onboard the ARG flagship while employing air power in support of expeditionary warfare.

h. Reconciling R2P2, Cyclic Flight Operations, and the ATO Cycle. The operational requirements inherent in quick reaction Marine and amphibious operations are achievable in the ARG/CVBG integrated environment. Using the R2P2 process as a baseline,

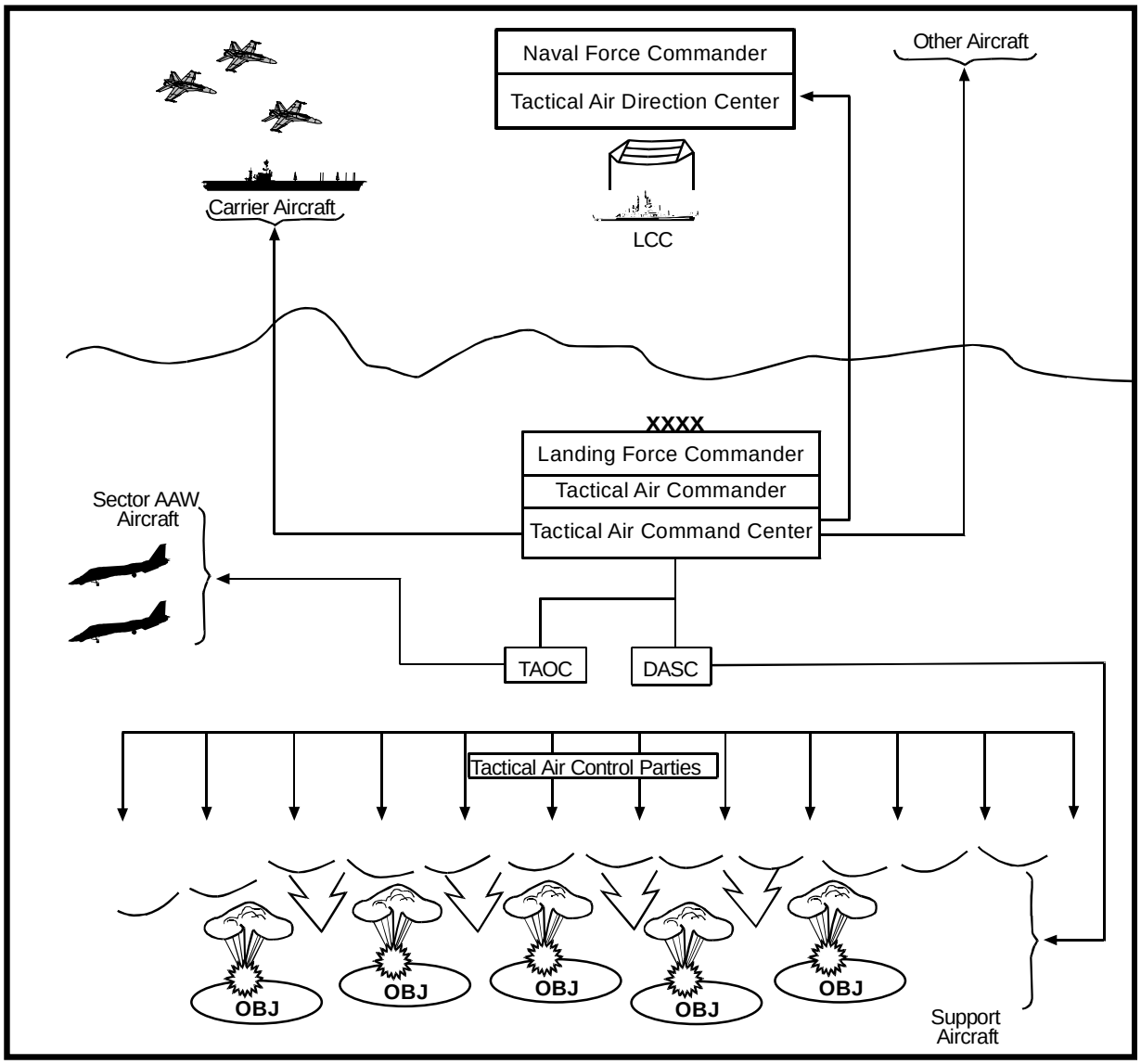

Figure III-6. Air Operations Tactical Air Control Ashore

requirements of carrier strike operations and the ATO cycle may require minor modification to ensure that ARG sorties are properly planned, scheduled, coordinated, and deconflicted. Information exchanged between ARG air planners (TACRON and ACE) and the carrier air planners (strike operations and air operations) requires modification to make the system more responsive.

To achieve successful results, the air planning staffs of the CATF, CLF, and CVBG should develop a timeline for the details of air planning and airspace control to be shared by each. Staffing levels normally will not permit full time Marine Corps liaison officers on the CV and CV wing liaison officers on the LHD/LHA. However, this has proven invaluable during training and exercises to identify coordination means to be used for each deploying ARG and CVBG.

(1) Carrier Air Wing Capabilities Available for MEU (SOC) Support. See Appendix B.

(2) LHA/LHD CV Connectivity. Multiple real-time links, both voice and data, between the air operations sections of the amphibious flagship and the CV are the keys to success.

i. Termination. Termination of an amphibious operations is predicated on accomplishing the ATF mission in accordance with the specific conditions contained in the initiating directive. The firm establishment of the LF ashore is usually specified as one of these conditions. When the mission is to establish a LF ashore, the following conditions must be met:

(1) The beachhead is secure.

(2) Sufficient tactical/supporting forces are established ashore to ensure the continuous landing of the requisite troops and materiel for support operations.

(3) Command, communication, and supporting arms coordination facilities are established ashore.

(4) CLF is ready to assume full responsibility for subsequent operations.

When the CATF and the CLF are satisfied the above conditions are met, the CATF reports these facts to the commander designated in the initiating directive. This authority then terminates the amphibious operation, dissolves the ATF, and provides additional instructions as required, to include command arrangements and disposition of forces.

6. Tomahawk Land Attack Missile Operations (TLAM)

a. C2 Relationships. A joint force operation requires TLAM integration into the unified commander's C2 architecture. Figure III-7 illustrates the normal integration for TLAM campaign C2.

b. Staff Elements and Coordination Functions. The following paragraphs explain a series of staff elements and coordination functions to ensure the successful completion of a TLAM operation, from the identification of the initial target list to the actual missile launch.

(1) Naval Component Commander (NCC). The NCC is the principal naval advisor to the JFC and is responsible for all naval activity in a joint force operation. During TLAM contingency operations, the NCC acts as the direct conduit from the) National Command Authorities (NCA)/unified commander through the TLAM Strike Coordinator (TSC) and launch area coordinator (LAC) to the TLAM launch platform. The NCC provides liaison officers to the JFACC and other coordination agencies to synchronize naval contributions to the JTF mission. The unified commander normally appoints the NCC to act as the Tomahawk executive agent (TEA) responsible for all aspects of theater Tomahawk operations. The battle group commander is responsible for tasking in-theater afloat planning system (APS) detachments. This tasking is coordinated with the cruise missile support activity via the NCC.

(2) TEA. The TEA has overarching responsibility for Tomahawk logistics, strike planning, mission data distribution, and all supporting functions. The TEA may delegate

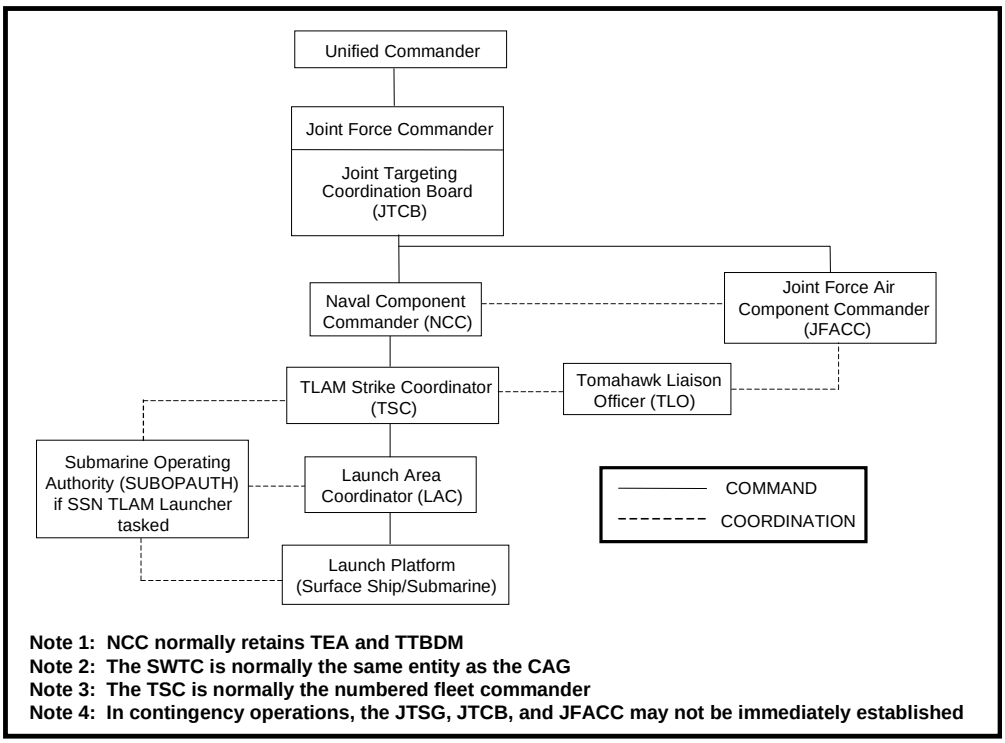

Figure III-7. Tomahawk Campaign Command and Control

all, some, or none of the duties and authority for these functions, including the duties of managing the master mission library (MML) of Tomahawk missions, Tomahawk command information (TCI), and asset management data to a Tomahawk tactical data base manager (TTDBM). In normal practice, the NCC retains these duties. The TTDBM is not a separate commander or coordinator; it is a duty assigned for continuity to an agent who is always in the theater. It is possible that the TEA could appoint one or more subordinates as TSCs, responsible for Tomahawk operations in different parts of the same theater of operations.

(3) CVBG Commander. The CVBG commander ensures effective execution of naval missions including TLAM missions tasked by higher authority. The NCC could designate the CVBG commander to perform the duties of the TSC. Subordinate warfare commanders support the TSC in executing TLAM strike duties. The APS detachment reports directly to the CVBG commander, unless the CVBG commander delegates authority for the APS to a subordinate commander. The CVBG commander is responsible for prioritizing mission planning requests (MPRs) tasked to attached APS detachments. The CVBG commander has approval authority for APS missions planned in response to MPRs. For APS missions planned in response to NCC or CINC tasking, the CVBG commander reviews and forwards the missions for approval by the tasking commander prior to distribution.

(4) TSC. The TSC is the designated agent (appointed by the NCC/TEA) responsible for all TLAM strike planning, coordination, and reporting in a strike or series of strikes. The actual designation and location of the TSC is determined on a case-by-case basis, based on the following factors:

(a) Specific scenario requirements.

(b) Commands involved and their relative levels of expertise in Tomahawk strike planning.

(c) Degree of TLAM involvement in the operation.

(d) Availability of, and access to, required communications and TLAM planning support system.

(e) Proximity and access to JFACC TLAM strike planners.

Note: There may be multiple TSCs in the same theater. For example, Commander, Sixth Fleet, could assign the responsibilities of the TSC to a subordinate unit , if operating as a separate JTF in the Gulf of Sidra, while retaining the responsibilities of the TSC for a task group operating in the Adriatic Sea.

Depending on the frequency and complexity of TLAM operations, face-to-face meetings with TSC, JFACC, and strike warfare commander (STWC) may be required. At a minimum, the TSC must be located at a site with a mission distribution system (MDS) node. Robust, viable communications must be available between the TSC and the NCC, JFACC, warfare commanders, LACs, and firing units. In a joint force operation, TSC liaisons are placed with the JFACC, NCC, battle group (BG) and ATF commanders, subordinate warfare commanders, and appropriate ground force commanders to ensure that the TLAMs are effectively integrated into daily operations. In a contingency operation, the TSC carries out the strike guidance provided in the unified commander's alert and execute orders. A major concern in this effort is deconfliction of missile fly-out routes. For TLAM missions in support of an AOA or whose launch position, flight route, or target area is located within the AOA, the TSC must obtain BG commander concurrence before executing the missions. The LAC, as the TSC's single point of contact (POC) for TLAM matters, usually conducts necessary liaison with the CATF.

(5) Tomahawk Liaison Officer (TLO). The TLO integrates TLAM planning and operations with the JFACC. The TLO is trained and provided by the theater NCC and/or TSC. The TLO interacts with both combat plans and combat operations in a manner similar to other component liaison elements. The TLO is the central liaison POC for all aspects of TLAM employment at the JFACC and works for the NCC. Integration begins during the earliest strategic planning and continues through master air attack plan (MAAP) development, ATO production, and strike execution. Integration concludes with battle damage assessment analysis and restrikes. TLOs support TLAM operations, including strike and mission planning, database management, and familiarity with NCC organization and procedures. In addition to manning, the NCC provides TLAM-unique support requirements such as MDS, electronic Tomahawk planning package (ETPP), computer, and TCI net.

(6) LAC. The LAC is the TSC's principal agent, responsible for leading the execution of TLAM strike operations. Candidates for LAC should have access to ETPP or MDS, and sufficient communications capability with the TSC and all Tomahawk platforms. The LAC coordinates on-scene requirements and has the authority to control launch platform maneuvers and stationing in TLAM launch areas. If large distances, e.g., Eastern Mediterranean, Red Sea, and Arabian Gulf, separate launch areas, a LAC may be assigned

to each geographic area to ensure effective execution of TLAM launch operations. After determining which command(s) is best situated to direct execution of the strike plan, the TSC makes the assignment.

Note: Submarines should only serve as LACs for strikes restricted to submarine-only launches. Submarines do not have the communications and surveillance capabilities available on a flagship or a surface Tomahawk ship and may not hold all of the TCI required for coordination.

The LAC should know support (submarine) operations coordinating authority (SOCA), submarine operating authority (SUBOPAUTH) procedures, and concerns. The LAC should promptly contact the SOCA for guidance and assistance in contacting and directing submarines to their launch areas. For TLAM operations in an AOA, the LAC should provide the CATF specific TLAM mission information. This information should include TLAM AOA entry points, flight corridors and altitudes, waypoints within the AOA, first preplanned waypoint coordinates and outbound heading, target locations (if within the AOA), and timeframes in which missiles will be in the AOA. In the LAC intentions message, firing units should be advised of the composition of the AOA, including dimensions and altitudes, forces assigned to support the amphibious objectives, and deconfliction actions necessary in the area. This information should be provided to the LAC from the CATF. When possible, the LAC should station firing units to minimize TLAM flights through the AOA. If TLAM targets are located within the AOA, the LAC and the CATF inform the TSC of any deconfliction issues. The TSC and LAC must deconflict overwater routes prior to first preplanned waypoint for surface and subsurface units. The TSC and LAC must provide notice to ships in applicable Tomahawk maneuver areas.

(7) STWC. The STWC is responsible to the BG commander for executing strikes tasked by higher authority. In joint operations emphasis shifts from responsibility for developing Navy-executed strike operations to coordinating joint strike operations prepared by the JFACC. The STWC liaises with the TSC to facilitate coordination, deconfliction, and execution of TLAM and tactical air strikes. Table III-3 depicts Tomahawk C2 responsibilities.

c. Launch Sequence Plan/INDIGO/Firing Report Messages. A launch sequence plan assigns targets, numbers of missiles and time on target so firing units can execute the launch. INDIGO messages authorize/direct firing units to launch their missiles. Firing reports indicate the number of missiles each firing unit successfully launched.

Note: For Tomahawk, the ATO is authority for the release and employment of TLAM by the TSC, but the firing units <u>must</u> still receive the launch sequence plan and INDIGO messages, which direct them to launch.

d. Missile and Mission Management. Staff planners use TCI in preparing for Tomahawk strike operations. TCI includes missile and mission data furnished by mission planning sites through MDS tapes, ETPP disks, and hard copy messages. TCI provides the C2 information required to employ the TLAM missions written on the data transport devices (DTDs) held by firing units. MDUs can update TCI and DTDs from MDS nodes, which electronically relay new information to firing units and staffs. The TEA using the

Title	Function(s)	Command
JTSG	• Strategic target list • Apportionment guidance	Unified CINC staff element
JTCB	• JITPL • ROE compliance • Apportionment guidance	JFC staff element
JFACC	• ATO • ACO	Air component commander
TEA	• Designate TSC • Promulgate CONOPS • Designate TTDBM • Implement *Forward Pass* procedures through TTDBM	NCC
TSC	• TLAM campaign with JFACC • LSP • Mission planning requests • INDIGO • TLAM strike cell oversight • Advance deconfliction	NCC or BF/BG commander
TLO	• Liaison between NCC and JFACC for TLAM employment issues	NCC or BF/BG commander
LAC	• Launch coordination/preparation/execution oversight • Overwater airspace deconfliction of the immediate area • Consolidated reports	-BF/BG commander -Destroyer squadron commander -Launch platform commander

Table III-3. Tomahawk Command and Control Responsibilities

mission verification index, which is a listing of missions, may promulgate theater requirements for TCI and mission data and TCI required for support of theater strike plans.

e. Communications. TCI data is required for staff planning, strike planning, and firing unit engagements planning. Voice circuits designated for use as TLAM strike coordination nets accomplish tactical coordination. These nets need not be dedicated to TLAM strike planners, but must be readily accessible to the TSC, LAC, and firing units. Hard copy record message traffic is employed to issue the TSC's launch sequence plan, warning orders, INDIGO mission orders, and post-firing reports. Tomahawk in-flight position reporting system missiles use UHF fleet satellite communications channels to relay position and status information to firing units.

Appendix A
ARMY OPERATIONS

1. Background

The Army develops its airspace C2 based on doctrine and selected TTP outlined in Joint Publication 3-52, *Doctrine for Joint Airspace Control in the Combat Zone*. This appendix details the Army's infrastructure supporting its airspace needs, including doctrine, missions and functions, theater air-ground system (TAGS) interfaces, air traffic services (ATS), and communications within the Army air-ground system (AAGS).

2. Doctrine

The Army's basic operations doctrine exploits the use of all weapons, arms, and services fighting in the same battlespace. The ability to maneuver allows the Army to place the enemy at a disadvantage through the flexible application of combat power. The airspace medium provides an important dimension to maneuver by supporting firepower, protection, intelligence, and air operations.

The use of airspace to enhance maneuver requires coordination to enable all airspace users—Army, other Services, and allied forces—to operate with minimum constraints, yet protect friendly forces. In order to accomplish this, the Army uses the AAGS, which is designed to accomplish the functional activity of Army airspace command and control (A2C2) within the C2 framework at each echelon of command. The A2C2 elements at the various echelons are responsible for promoting the effective and safe, yet flexible, use of airspace within the Army's area of interest. Airspace integration performed at the lowest possible level ensures that requirements for the use of airspace are coordinated to prevent fratricide and promote flexibility.

3. Missions and Functions

The ground commander must coordinate combat, combat support (CS), and combat service support (CSS) forces simultaneously. Accordingly, he must have the freedom to use and protect the airspace over these forces. He must have the maximum flexibility to use organic and supporting assets within that airspace under limitations imposed by the JFC. The AAGS ensures coordination and integration of maneuver, aviation, field artillery (FA), air defense artillery (ADA), military intelligence (MI), and other operations.

a. Maneuver.

(1) Background. Air maneuver, mounted maneuver, and dismounted maneuver operations present considerable challenges to TAGS as a whole. Maneuver units have organic and/or supporting indirect fire capabilities that require battlespace deconfliction. The controlling headquarters, whether air, mounted, or dismounted, must coordinate and implement the airspace requirements with higher headquarters. The maneuver force headquarters normally integrates the efforts of the combined arms team, to include the synchronization of all their supporting units' airspace needs.

(2) Special Considerations. The inclusion of A2C2 considerations in the military decision making process ensures the proactive incorporation of appropriate ACMs and their coordination with other airspace users or at least address the risk where conflicts may still exist. For example, the ground maneuver commander is best capable of selecting a minimum risk route through his AO as he considers the aspects of friendly force maneuver and fires, enemy, and terrain. Circumstances such as aviation attack elements and ground forces conducting missions simultaneously against the enemy require substantial deconfliction of the airspace. These missions can cover large amounts of terrain and involve both ground and ACMs. Special considerations involving airspace include danger ricochet zones, weapons effects, and fires over friendly forces.

b. Aviation Operations.

(1) Background. Army aviation units are part of the forces organic to the Commander, Army Forces (COMARFOR). They execute the ground combat portion of the joint force mission. Army aircraft are not normally included in the JFC's apportionment of tactical air resources to accomplish the air combat functions.

(2) Mission. Army aviation is a highly mobile, lethal, versatile force that supports the ground scheme of maneuver in both offensive and defensive operations with the same continuous planning/execution cycle as the ground maneuver commanders they support. As a fully integrated member of the combined arms team, Army aviation units conduct combat, CS and CSS operations. Army aviation units provide the ground commander with an unprecedented capability to apply combat power at the decisive place and time. Aviation units execute attack, air assault, reconnaissance, intelligence, logistics, and C2 operations. They are assigned to aviation brigades at echelons above corps (EAC), corps, divisions, and armored cavalry regiments.

(3) Control Measures. Flight modes employed by aviation units depend on the mission, threat, terrain, and relative location on the battlefield. Army aviation units maneuver over the battlefield, operating in the terrain flight environment, using control measures that are similar in nature to ground maneuver forces. Typical graphic control measures used are: objectives, sectors, zones, air axes or air corridors, phase lines, boundaries, battle positions, assembly areas, forward arming and refueling points, attack positions, and other graphic control measures as indicated in unit standard operating procedures or Army doctrine. Aviation units require maximum tactical flexibility and normally employ procedural control measures instead of positive control. The advent of positive reporting systems on air platforms (or near real time positions from sensor fusion feeds) to airspace/command authorities provide greater positive control capabilities. These capabilities should only be exercised as necessary to enhance combat operations or an added force protection measure. In the rear operations area (brigade rear boundary to corps rear boundary), air traffic normally uses procedural control along standard army aircraft flight routes (SAAFR) behind the forward line of own troops, and between division support areas, major base locations, airfields, and C2 sites. Because the threat is diminished, efficiencies are gained through flight path predictability. CS and CSS mission type aircraft normally use SAAFRs that are easy to

navigate and that avoid restricted areas and other hazards. Combat mission aircraft will normally use air axes, air corridors, maneuver graphics, and FSCMs to facilitate their movement and fires within the battlespace.

(4) Medical Evacuation (MEDEVAC). A unique CSS role involves MEDEVAC. Air ambulance units are positioned on the battlefield based on mission, enemy, terrain, troops, and time, with the primary consideration being responsive. This rapid response to a casualty evacuation request requires the aeromedical unit to provide liaison or a communications link to the appropriate level command post (CP) A2C2 element. Real-time coordination is required to provide the necessary interface to complete time-sensitive airspace requests permitting transversal of the entire battlefield. The liaison additionally must provide the communications means necessary to coordinate with the aircraft conducting the mission, since airspace clearance may become a function of airspace avoidance as the MEDEVAC aircraft avoids tactical air, FA, and other hazards.

(5) Freedom of Movement. Aviation units maneuver in the ground regime and in the third dimension of the ground commander's battlespace. This underscores the requirement for army aviation, specifically rotary wing aircraft, to have maximum freedom of movement to support the ground scheme of maneuver while considering terrain, weather, and the threat. Combat mission aircraft normally use air axes, air corridors, and maneuver control measures to facilitate their movement around the battlefield.

c. FA Operations.

(1) Background. FA uses airspace to deliver indirect fires to support maneuver forces and the Army component commander and JFC concept of operations across the entire area of the battlefield. These indirect fires can traverse the airspace from extremely low to very high altitudes and are essential to successful mission accomplishment and force protection. In many situations, the only fire support that maneuver forces may have in addition to their organic direct-fire weapons are the indirect fires provided by mortars and field artillery. These fires cannot be unduly restrained or delayed, as this delay may result in decreased responsiveness, which can jeopardize mission success and contribute to increased friendly casualties.

(2) Fires. FA strives to increase its responsiveness. This emphasis on responsiveness does not constitute a disregard or indifference for other airspace users. Personnel in the fire support elements (FSEs) from company through corps are the principal means for deconflicting fire support with other airspace users. All planned artillery fires are coordinated with other airspace users. Planned indirect fires present the most effective form of airspace deconfliction. However, not all targets can be identified and fires deconflicted in advance. Fires of an unplanned, immediate nature will occur in response to the actions of the maneuver forces and the reaction of the enemy.

(3) Control Measures. FA relies primarily on procedural methods of control to coordinate the use of airspace. Real-time ACMs and FSCMs are of primary importance. The FSE coordinates planned fires and acts as the focal point for airspace requests to support fires of an immediate nature. This involvement continues to the deep operations

coordination cell where airspace requests are forwarded through the corps A2C2 cell and BCD for inclusion in the ACO/ATO, or as immediate airspace requests for the BCD in the JAOC. The deconfliction of long range missiles; i.e., ATACMS and Multiple Launch Rocket System, is of key importance.

d. ADA Operations.

(1) Background. The ADA mission is to protect the force and selected geopolitical assets from aerial attack, missile attack, and surveillance. ADA contributes to this mission by providing the capabilities for sustained operations as part of a joint, multinational or interagency team. ADA supports multinational and joint operations by providing theater missile defense and active air defense and by supporting attack operations.

(2) Mission. ADA operates at the strategic, operational, and tactical levels of operations. At the strategic level, ADA objectives are to protect forces or geopolitical and military assets of strategic significance. Air defense (AD) units at every echelon of command can accept strategic missions. At the operational level, the ADA objective is to protect the force and selected assets in accordance with the JFC's and the joint force land component commander's (JFLCC's) theater priorities. At the tactical level, the objective of ADA is to protect corps and divisional forces as they plan and execute combat operations. ADA forces provide air defense to corps and divisions in order to allow maneuver units the freedom to maneuver. ADA units located throughout the combat zone defend maneuver forces, airfields, logistics elements, and other critical assets, using both positive and procedural means of fire control.

(3) Army Air and Missile Defense Command (AAMDC). The commander of the AAMDC in the theater normally serves as the JFLCC's theater Army air defense coordinator (TAADCOORD). As the TAADCOORD, he provides liaison to the land component commander (LCC), the BCD, the area air defense commander (AADC) and to the headquarters of other services or multinational forces. At the theater level, the AAMDC also may serve as the DAADC.

(4) Control Measures. Integration of airspace control is imperative to ensure safe, unencumbered passage of friendly aircraft while denying access to enemy aircraft, UAV, and missiles. ADA units require automated transfer of airspace information such as the ACO/ ATO in the conduct of their mission. ADA units at all echelons provide near-real-time situational understanding of the three-dimensional battlespace using organic and integrated sensors.

e. MI Operations. MI airborne platforms, consisting of helicopters, airplanes, and UAV, conduct intelligence collection, target-acquisition, and electronic warfare missions over the entire battlespace. These platforms use low-altitude airspace normally preplanned and coordinated through the LCC. Some platforms also conduct their missions in upper-altitude airspace procedurally obtained from the ACA. Missions are planned for inclusion in the ATO/ACO. However, because of their flexible, highly responsive nature, assets may be tasked for immediate missions that are not in the ATO/ACO. In addition to providing an interface for airspace planning, the AAGS must provide a real-time conduit to acquire airspace for immediate missions.

f. Other Operations.

(1) Airborne Operations. Airborne units are subject to many of the same considerations of A2C2 as other maneuver and aviation units, and special operations forces (SOF). These units require special planning considerations to operate in all three dimensions of the battlespace. While in the air movement phase of the operation, airborne forces require airspace control measures to provide entry and exit routes for aircraft delivering forces to their predetermined locations. Airborne operations normally require restricted operations zones (ROZs) and/or a high-density airspace control zone (HIDACZ) to deconflict airspace from all other aircraft not directly involved in the airborne operation. The ground phase of the operation requires substantial deconfliction of battlespace. These forces, once employed, are often in areas beyond the normal concentration of forces and in close proximity to free fire areas (FFAs), other supporting fires, and/or the effects of those fires. These operations are normally joint, requiring the complete integration of all of the service-specific elements of the TAGS.

(2) Nuclear, Biological, Chemical Operations. These operations, whether threat-induced or planned, require airspace coordination to preserve the air assets operating in the vicinity; e.g., chemical munitions may produce a moving ROZ.

4. Army Air Ground System

a. Background. The AAGS supports airspace coordination. A2C2 elements are responsible for managing effective and safe, yet flexible, use of airspace within the Army's area of interest.

b. Mission. The AAGS complements and supports joint, multinational, and interagency requirements throughout the entire range of military operations. The AAGS works within the TAGS to enhance the COMARFOR's ability to effectively coordinate and synchronize rapid massing of combat power in response to changing threats. The AAGS is designed to work closely with the United States Air Force's Theater Air Control System (TACS). The Air Force TACS and the AAGS is the process used to coordinate and execute air support requests and exchange operational information and intelligence between the two services. TACS/AAGS is designed to enhance the effectiveness of supporting forces and supported forces' ability to accomplish the JFC's objectives. The AAGS provides the Army the framework for the synchronization, coordination, integration, regulation, deconfliction, and identification, of airspace use and users for the LCC and subordinate maneuver commanders.

c. COMARFOR Support. The AAGS allows the COMARFOR the flexibility to manage his airspace during the course of conflict and operations other than war. The COMARFOR must have the freedom to use and protect the battlespace of the forces. The COMARFOR is delegated the authority to control employment of organic aircraft, air defense and surface-to-surface fires on an immediate-response basis in the airspace over those land forces and the controlled AO. This delegation of authority normally comes from the JFC through his appointed ACA. The A2C2 elements, supporting these maneuver commanders, coordinate both positive and procedural control measures to manage and integrate airspace

requirements by facilitating close and continuous coordination of Army airspace users with other supporting airspace users. When conflicts arise, the JFC is the resolving authority.

d. C2 Structure. Figure A-1 superimposes the AAGS on the existing Army C2 structure, from Army to battalion level. Each echelon of command has CPs where staff integration and communications capabilities allow the commander to exercise C2 over his subordinate units. The AAGS is designed to accomplish the functional activity of Army A2C2 within the C2 framework at each echelon of command. Since airspace control affects all operations, it is a command function.

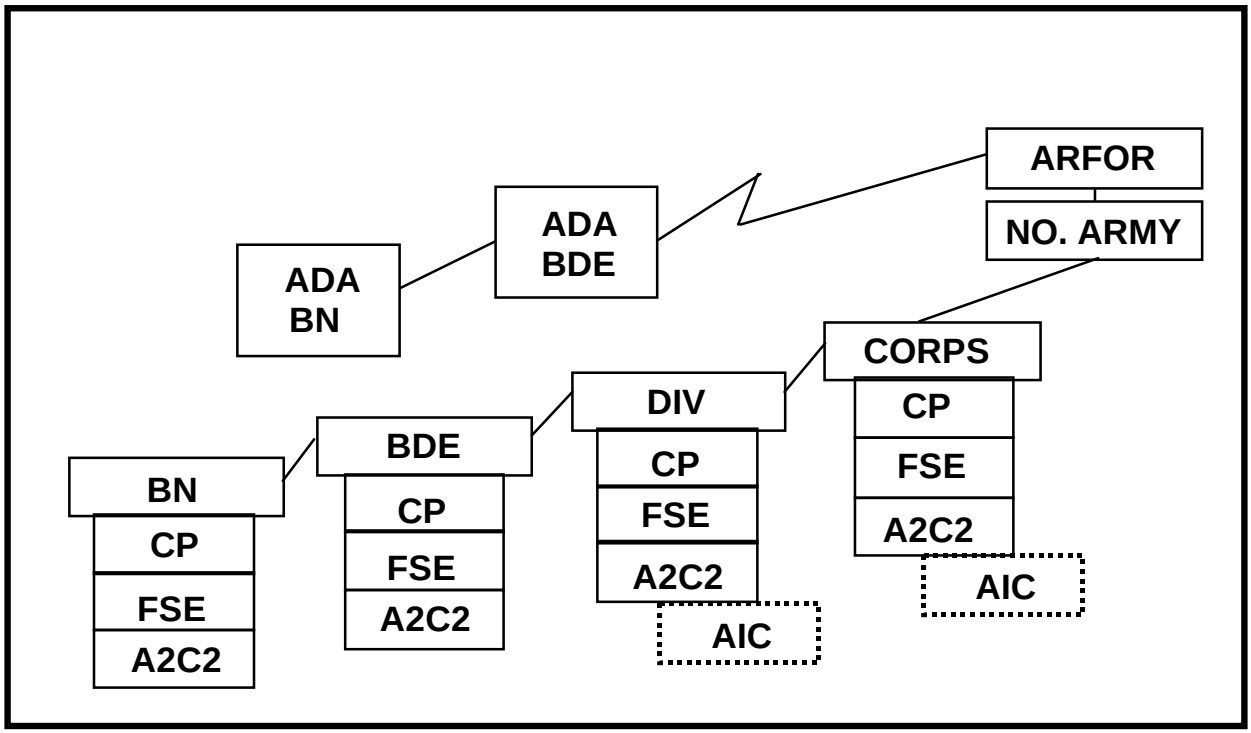

Figure A-1. Army Air Ground System

5. A2C2 Organization, Facilities, and Personnel

a. A2C2. A2C2 consists of identifying, coordinating, integrating, and regulating Army airspace needs. Through coordination, the A2C2 element maximizes joint force effectiveness by ensuring simultaneous airspace use is synchronized in time, space, and purpose to produce maximum combat power at decisive points. A2C2 element must be responsive and capable of close and continuous coordination among all airspace users. A2C2 integrates and synchronizes those functional operations that require airspace.

b. A2C2 Organization. The A2C2 organization is an arrangement of staff elements of each command echelon, from maneuver battalion through theater Army or LCC if the senior Army maneuver commander is so designated. Dedicated A2C2 elements are found at division level and higher. They include ADA, army aviation, FA, ATS, ALO, primary staff, and others as necessary; i.e., chemical, engineer, MI, aeromedical, signal, G4/S4, SOF, and other Service liaisons, etc. However, below division level, all A2C2 tasks are performed within brigade and battalion CPs by operations personnel and are usually augmented by

elements that support the maneuver commander; e.g., fire support, ALO, ADA, S2, chemical, Army aviation, etc. Each main CP establishes an A2C2 element, normally next to or collocated with the FSE. The A2C2 element is a G3/S3 operations responsibility but is normally supervised by the G3/S3 Air. Under this supervision, ATS personnel perform the integration function within the A2C2 element for division and above echelons. Absolutely essential to successful integration is the active participation of the other airspace users.

(1) Corps A2C2. The Corps A2C2 organization supports future operational planning, and conducts current operations. The A2C2 element at the main CP, collocated with the FSE, is the focal point for all airspace control activities related to corps rear area operations, deep operations, and planning for future operations.

(a) Responsibilities. Members of the A2C2 element are assigned staff responsibilities to accomplish two separate tasks. First, they perform their primary staff functions; second, they assist in the A2C2 process by synchronizing their parent unit's airspace requirements with the airspace users of the combined arms team and other Services.

(b) Tactical CP. A2C2 representatives at the tactical CP primarily accomplish airspace control activities supporting the execution of close operations, with the main CP A2C2 element providing support. Close coordination is maintained between the tactical CP and the main CP to ensure that airspace requirements generated by changes to the tactical situation are met in a timely, effective manner.

(c) Tactical CP Manning. The corps A2C2 element representatives at the tactical CP should consist of, as a minimum, a fire support officer (FSO), an aviation officer, an air defense element, and an ALO. The FSO or aviation officer may serve as the TAC A2C2 element chief to coordinate airspace and air support requests through the main CP A2C2 element G3 Air.

(d) Rear CP. The rear CP normally does not have an A2C2 element because of personnel and equipment constraints. The A2C2 element at the main CP handles rear CP requirements.

(2) Division A2C2. The organization of A2C2 elements within the tactical and main CPs at division is similar to that at corps. However, the division's primary focus is on the conduct of battles and engagements in the forward portion of the combat zone. Therefore, airspace coordination is focused primarily on the synchronization of all airspace users in the combined arms team and supporting services involved in the close battle. The difference in geographical orientation (forward versus rear) results in minor differences in the airspace control procedures employed and the degree of coordination required**. No formal A2C2 element is established in the division tactical CP.**

(3) Brigade and Battalion A2C2. No special staff element exists at brigade and battalion level to perform the A2C2 function. Consequently, existing staff personnel, supporting liaison fire support representatives, and the ALOs/TACPs perform the A2C2 function. Habitually, Army airspace management over these echelons remains with the higher division headquarters; yet C2 for such remains with the maneuver command (via organic communications).

c. Functions. Current Army doctrine states that Corps through brigade may establish three CPs-tactical, main, and rear. The functions of each vary; however, generic functions are usually accomplished at each CP in accordance with FMs 100-5 and 101-5.

(1) EAC. A2C2 elements at this level provide the interface required for multiservice or joint operations. In a multicorps environment, each corps normally provides liaison to the EAC/LCC headquarters. Coordination between the LCC and JFACC takes place between the Army BCD and the JAOC (Air Force AOC or theater equivalent for the Navy [tactical air control center] and/or Marine Corps [tactical air command center]). A detailed explanation of each component's senior control element may be found in other appendixes of this manual.

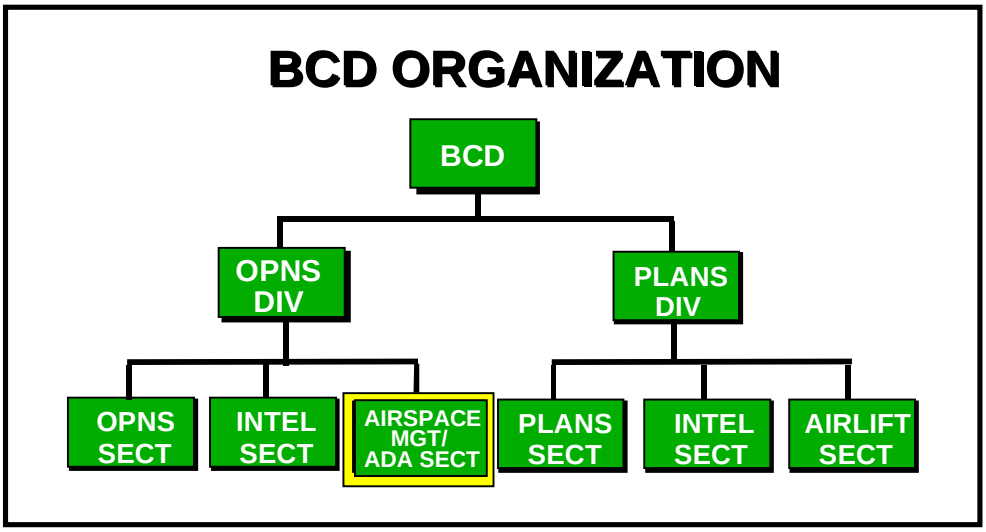

Figure A-2. Battlefield Coordination Detachment Organization

(2) BCD. See Figure A-2. The BCD is the Army's senior liaison element provided by the COMARFOR to integrate ground force requirements. It provides land force air support requirements for inclusion in the theater air operations plan. It monitors and interprets the land battle for the AOC/TACC and is the coordination conduit between Army and other services. The BCD is integrated with the senior centralized control element for the JFACC. The BCD expedites the exchange of information through face-to-face contact. The BCD is organized with six functional elements: operations, plans, intelligence, air defense, A2C2, and airlift. Coordination with supporting air wings is accomplished by ground and air reconnaissance liaison officers under the BCD's direction. The air defense and airspace management section coordinates Army air defense and airspace activities with the plans and operations sections within the AOC/TACC. It exchanges information with the air defense liaison officer at the CRC/TAOC, land component headquarters and ADA CP, or AAMDC. Specific BCD A2C2 duties include:

(a) Coordinating Army (planned, immediate, emergency) airspace requirements with the ACA.

(b) Coordinating other Services' airspace use requirements over land forces with the Army.

(c) Integrating Army airspace user activities, i.e., RISTA, deep attacks and ATACMS launches.

(d) Advising the AOC/TACC on Army operations that affect joint use of airspace.

(e) Representing ground force interests in the development of ACMs.

(f) Receiving and staffing Army ACM requests for ACA approval.

(g) Providing current and future A2C2 situation to the AOC.

(h) Maintaining status of current/proposed airfields/en route structure/landing zones (LZs)/pick up zones (PZs)/drop zones (DZs).

d. Responsibilities. The A2C2 cells/elements provide the integration function that enables airspace users to effectively and efficiently operate within joint and combined airspace environments. These elements form a vertical and horizontal channel through which airspace control requirements, plans, orders, and information are coordinated, disseminated, and synchronized with the tactical plan. ATS personnel, within the A2C2 elements; provide unique expertise in the development of procedures and plans. See Figure A-3.

Primary A2C2 Tasks

- Develop and coordinate airspace control SOPs, plans, and A2C2 annexes to the base order.
- Identify, consolidate, coordinate, and integrate airspace user requirements within the AOA.
- Coordinate and integrate airspace use within the AOA with other Services and adjacent units.
- Identify and resolve airspace user conflicts.
- Staff and forward requests for special use airspace to the next level for approval.
- Maintain A2C2 information displays, overlays, and maps with ACM, FSCM, and known hazards.
- Receive and disseminate ACMs and directives from higher headquarters, then integrate and implement ACA-approved ACMs affecting the maneuver commander's AOR.
- Incorporate ACMs in the scheme of maneuver during the planning phases by making A2C2 part of the commander's course of action decision criteria.
- Seek commander's guidance on A2C2 priorities by mission type or battlefield operating system or geographic area of operations or time/phases of the operation.
- Monitor planned airspace user operations and correlate situations affecting airspace use for immediate, unscheduled events such as MEDEVAC missions or ATACMS launches.
- Maintain ADA and artillery firing locations.
- Monitor subordinate unit plans for aircraft in/out procedures at FARPs, RRPs, FAAs, Route SPs, and RPs.
- Disseminate changes to the air defense weapons control system.
- Monitor early warning control measures to deconflict friendly airspace user operations.
- Monitor status of supporting airfields, navigational aids, and air traffic services facilities.
- Monitor air support requests for organic helicopters and assign mission control numbers.

NOTE: Normally the G3/S3 Air is designated the approving authority for and submits preplanned aur support requests (DD Form 1972).

Figure A-3. Primary A2C2 Tasks

e. Procedures. Effective and efficient use of airspace serves as a combat multiplier that gives the commander a decisive edge over the enemy. Airspace control procedures define the methods for accomplishing the airspace control function, ensuring unity, and standardizing the airspace control effort. These procedures must be sufficiently flexible and responsive to accommodate rapid changes to planned and ongoing operations. A higher density of friendly weapon systems with overlapping flight profiles and operating envelopes will characterize airspace in future conflicts. The goal is to maximize combat effectiveness while minimizing friendly losses to friendly fires. Planners must consider airspace requirements early in the planning process. Reacting to changes in the tactical situation during the conduct of battle requires similar actions. However, the difference is the amount of time available to establish resolution and coordinate and disseminate the revised information. Airspace control maximizes force effectiveness without inhibiting either the ground effort or the airspace users supporting it. Use of standard operating procedures (SOPs), graphics, ACMs, FSCMs, and air defense rules of engagement define the Army methodology for airspace control.

f. Planning. The A2C2 staff has to be involved in the periodic review of the contingency ACP. Early in the deployment planning phase, they must review supporting plans, overlays, graphics, and sketches that depict and illustrate maneuver, fires, air defense, reconnaissance and surveillance, electronic warfare, and sustainment operations.

(1) Conflict Resolution. Potential airspace conflicts are identified and established procedures are followed to resolve the conflict or reduce the risk. The potential conflict is further evaluated by looking at lateral, altitude, and time separation. If the involved airspace users have sufficient separation, then a conflict does not exist. If a conflict exists, the A2C2 element must asses the risk and select one or more of the following options:

(a) Establish procedural control methods in accordance with SOPs.

(b) Coordinate the time sequence or relocate the airspace user.

(c) Request and establish the appropriate ACM and controlling authority.

(d) Eliminate an airspace user or restrict one's operation in accordance with commander's priorities.

(2) Synchronization. To ensure efficient use of airspace and reduce the risk of fratricide, the G3/S3 Air should hold a daily A2C2 synchronization meeting as part of the unit battle rhythm. One technique to accomplish this is to have an airspace coordination meeting in conjunction with the targeting meeting to plan, integrate, and actively deconflict airspace in support of the ground scheme of maneuver.

(3) Unit Representation. Unit representatives, such as the ADA, aviation, ALO, FSCOORD, ATS, maneuver S3 Airs, engineer, G4/theater air liaison officer, and any other airspace user, should brief their operations and desired airspace requirements in order to identify, prioritize, coordinate and integrate airspace use and users. The A2C2 element at the lowest level should resolve airspace conflicts. Conflicts that cannot be resolved at a particular A2C2 echelon are forwarded through operational channels to the A2C2 of the

next higher echelon. Conflicts involving only Army forces are normally resolved at division or corps level. Conflicts involving other forces are forwarded through the ARFOR, to the BCD and resolved at the ACA level.

g. Establishing ACMs. Establishing one of the jointly approved ACMs requires ACA approval. The only exceptions are SAAFRs, if established, below the coordinating altitude (CA). If the CA has not been established, an air corridor is established by the ACA at the request of the appropriate ground commander. ACMs that support Army operations are requested through the A2C2 elements to the BCD who integrates required ACMs with the JAOC/TACC.

Airspace request formats outline the necessary information, including location, lateral and vertical limits, the controlling authority, and time frame during which the measure is enforced. The A2C2 element at each command echelon reviews requests to ensure the information is complete and the requested ACM best supports the concept of operations. Each element determines whether the ACM affects other airspace users in the area. The ACM is normally submitted using an ACMREQ on a standard USMTF. Once the ACM is approved by the ACA, it is disseminated to all appropriate elements using the standard USMTF ACO.

h. ATS. All ATS assets perform subfunctions of A2C2 including A2C2 liaison, area coverage by airspace information centers (AICs), or terminal/forward services at airfield/ landing sites. ATS focuses on synchronizing Army airspace use and coordinating with Army combined arms, joint services, and host agencies. ATS may develop a user-friendly document, an air procedure guide (APG, formerly aviator's procedure guide) to condense airspace information and provide recurring, Army-unique, airspace usage information. ATS has highly flexible teams that are deployable and versatile enough to support initial entry contingency (including natural disasters) and combat operations. ATS assets, which function across the continuum of military operations, are capable of providing augmentation to A2C2 elements, terminal services, airspace information services, and forward-area support services.

(1) A2C2 Cell Augmentation. Airspace management doctrine requires that A2C2 liaison elements be tasked to support at all echelons from division to EAC. ATS groups, battalions, and companies provide the ATS A2C2 liaison teams to the A2C2 elements at each echelon. They provide expertise on A2C2, airspace information, and ATS integration/ support capabilities. The liaison teams assist A2C2 cells to provide synchronization, regulation, identification, and deconfliction of all airspace users. These teams must be robust enough to afford 24-hour services yet mobile enough to move rapidly as combat operations develop.

(2) AICs. AICs provide en route services to all airspace users. The AICs act as extensions of the A2C2 elements of the division through theater by providing a real-time interface for changes in the airspace environment and by coordinating and deconflicting real-time airspace requirements. Although located at different echelons, all AICs perform essentially the same function and have the same tactical equipment. If the AIC is inoperative or moving, the ATS commander designates another AIC to serve as the main AIC. The redesignated AIC operates and employs the same as the original AIC. This link

ensures continuity in the flow of information required for air defense and air traffic management operations. The AICs provide updates that include the following: hostile aircraft intrusion warnings; on-call, demand-activated navigation aids (NAVAIDS); maintaining locations of rapid refueling points (RRPs)/forward arming and refueling points (FARPs); terminal facilities and NAVAIDS; dissemination of terminal airfield status; flight following and navigational assistance; aircraft sequencing on designated flight routes; dissemination of current and forecasted aviation weather information; search and rescue assistance to aircraft performing combat search and rescue operations; collection, processing, displaying, and dissemination of critical A2C2 information; and providing a backup C2 link for operational commanders.

(a) Theater Airspace Information Center (TAIC). The TAIC is collocated with or electronically linked to the control and reporting center (CRC) to provide an interface between civil and wartime transition airspace. It is also the primary interface with the joint and multinational airspace management system concerning the coordination of flights conducted rear of the corps boundary.

(b) Corps Airspace Information Center (CAIC). The CAIC is the primary ATS facility that provides A2C2 services, airspace information services and coordination of Army, joint and multinational air traffic operating in the corps rear operations areas.

(c) Division Airspace Information Center (DAIC). The DAIC provides A2C2 information and is employed in the division AO. The DAIC supports the CAIC with its coordination activities. The DAIC can also provide real-time air picture situational updates as required. The DAIC relays current and forecasted weather information and is the primary coordination link between the brigade A2C2 and division A2C2 cells.

(3) Terminal Services. Terminal services are those functions performed by ATS personnel that facilitate movement, take off, and landing, to include sequencing, of aircraft (rotary, fixed wing, UAV). They range from—full-service, (Federal Aviation Administration/ International Civil Aviation Organization-approved radar, tower, NAVAIDS, crash-rescue coordination), fully-instrumented, lighted airfields or airports where ATS take over or augment existing facilities—to temporary, austere landing strips/areas with minimal terminal services support (air-to-ground communications, traffic advisories, tactical lighting, limited navigational aids/radar).

(a) Tower Teams. Tower teams are normally employed at main operating bases where high-density air traffic exists. This team provides tower services similar to those conducted in a fixed-base environment. Tower teams control air traffic that is transitioning, landing, or departing main operating bases or tactical landing sites. The tower team is the primary ATS organization for regulating and integrating ATS terminal services at the main operating base. It also establishes the nonprecision approach capability for the terminal area of operations. All aircraft movements at the airfield or tactical landing site that the aviation operations section or appropriate A2C2 element initiates should be coordinated with the tower team.

(b) Ground-Controlled Approach Team. The ground-controlled approach team normally employs with the tower team at main operating bases. This team provides a near all-weather, precision, and nonprecision approach and recovery capability. It also provides surveillance vectoring and precision/nonprecision approach guidance to arriving and departing aircraft operating in the terminal area.

(4) Forward-Area Support Services. Tactical aviation control teams (TACTs) are employed as initial entry forces at auxiliary areas, and remote and austere locations using airborne, air assault, or ground insertion. TACTs can provide aviation units with on-the-spot control and advisory capabilities in any environment. The TACT provides terminal and airspace information services at any location where air assets require coordinated movement of aircraft.

TACTs can be organized in several configurations from manpack (pathfinder mode) to vehicular; to provide low probability of intercept and secure data/voice communications packages. TACTs are task-organized to support specific missions in forward areas. The primary focus is to provide support to aviation. The goal is to ensure coordinated aviation operations at austere landing areas or congested flight locations; e.g., communications to a division commander at a HIDACZ. The secure high frequency (HF) radio, a long-range communications capability, makes the TACT ideal for providing terminal area services at remote, austere landing areas. TACT operations can provide portable, lightweight NAVAIDS for passage points and landing site designation and integration. The mobility of the TACT allows the commander flexibility during all stages of force projection. The TACT can perform short-term independent operations and operate under night vision goggle conditions.

6. Communications

The A2C2 elements do not have dedicated voice and data communications nets until the fielding of the upgraded AIC and its subsequent collocation with the A2C2 cell. The cells rely on existing operational communications systems from each functional airspace user; e.g., maneuver, air defense, fire support, ATS, intelligence/electronic warfare, CSS, and the remote AIC for the respective echelon. A2C2 elements are required to communicate by SOP horizontally and vertically through voice communications links and automated systems. The communication means for ATS systems includes landline mobile subscriber equipment access and all combat net radios (secure and nonsecure) to include ultrahigh frequency-amplitude modulation (UHF-AM) radios for the joint air team and very high frequency-amplitude modulation (VHF-AM) radios for civil aircraft. Upgraded AICs digitize all the radios and upgrade to demand assigned, multiple-access satellite communications and aviation HF radio compatibility. Upgraded AICs also have full mobile area common user system access and Army Data Distribution System access and the automation processing to assist the A2C2/AIC mission. Combat net radios (FM and UHF) and mobile subscriber equipment are the primary means for A2C2 elements to maintain contact with their parent organizations. Communications between the A2C2 elements and airspace users is primarily through Army ATS/ATC elements (AICs/terminal facilities/TACTs) or operational retransmission facilities. These communications suites provide dedicated and redundant C2 communications links between operational commanders and air missions in progress.

Appendix B
NAVY OPERATIONS

1. Background

This appendix gives an overview of naval air operations in the composite warfare command environment. The United States Navy has several important characteristics: worldwide deployability, variable response capability, and forward presence. These characteristics give US naval forces several advantages over other military forces. The Navy can respond worldwide, demonstrating a show of force at one end of the conflict spectrum or responding in kind to a nuclear attack at the other end of the spectrum. It can flex military force anywhere within the spectrum, accomplishing its actions with a minimum of reliance on overseas bases or foreign government approval. The size, visibility, duration, and/or location of naval forces can be adjusted to demonstrate the level of interest or intent while retaining the capability to respond accordingly. Naval aircraft, surface-to-air missiles, and cruise missiles are essential elements of this force, and their incorporation into overall naval operations is a prerequisite to success.

2. Doctrine

US naval forces are employed to support two basic, interrelated functions relating to airspace control: sea control and power projection.

a. Sea Control. Sea control means control of the surface, subsurface, and airspace of specific sea areas of naval operations. Naval forces achieve control by destroying enemy forces or deterring enemy actions and by ensuring the necessary operating areas and sea lines of communication (SLOCs) remain open.

b. Power Projection. Power projection involves supporting land or air operations. It includes offensive naval operations such as amphibious assault, employment of carrier-based aircraft and sea-launched cruise missiles to attack targets ashore, and employment of naval surface fire support (NSFS) to suppress or neutralize targets.

3. Missions and Functions

a. Background. The Navy conducts naval warfare in three distinct dimensions: on the surface, subsurface, and in the air. The goal is battlespace dominance in all three dimensions. Because of the Navy's unique role in three-dimensional battlespace, it has developed fundamental naval warfare tasks to counter the enemy's capabilities and ultimately gain advantage over enemy forces.

b. Surface Warfare. Surface warfare involves employment of weapons against adversary ships to achieve sea control and maintain SLOCs. It can be considered analogous to battlefield interdiction over water.

c. Subsurface Warfare. Subsurface warfare, more commonly referred to as undersea warfare, employs weapon systems against adversary submarines. Undersea warfare is a mission unique to naval forces.

d. Air Warfare. Air warfare employs weapon systems to project power and defend fleet units against adversary aircraft and missiles. Air warfare is analogous to battlefield interdiction but also encompasses defensive/offensive counter air actions.

e. Warfare Areas. The six warfare areas in which naval air elements play a prominent role are discussed below. Each requires coordination and integration among airspace users.

(1) Undersea Warfare (USW). USW is the locating, tracking, and engaging of enemy submarines and often employs airborne assets to locate and destroy those platforms. USW may require airspace deconfliction measures to employ fixed and rotary wing air assets, especially in littoral operations.

(2) Surface Warfare (SUW). SUW employs airborne and surface assets to locate and destroy surface platforms. As with USW, execution of this task requires airspace deconfliction, particularly in the near-land environment.

(3) Strike Warfare (STW). STW consists of strike aircraft, TLAM, and NSFS operations to destroy or neutralize enemy targets ashore. STW includes attack against strategic and tactical targets such as manufacturing facilities and operating bases from which the enemy is capable of conducting or supporting air, surface, or subsurface operations against friendly forces. Integration of TLAM and strike air attacks requires close coordination between the JFACC and the TLAM strike coordinator (TSC) to ensure airspace deconfliction.

(4) Command and Control Warfare (C2W). C2W is the integrated use of operations security, military deception, psychological operations, electronic warfare, and physical destruction, mutually supported by intelligence, to deny information to the adversary or to influence, degrade, or destroy the adversary's C2 capabilities, while protecting friendly C2 capabilities against such actions. C2W is an application of information operations in military operations. It is both offensive and defensive. C2W in naval operations employs naval, joint, and national assets to attack an adversary's ability to C2 forces while simultaneously protecting friendly C2. Naval C2W involves the direction and control of aircraft, TLAM, NSFS, and SOF for targeting (directing units and localization); counter targeting; reconnaissance and surveillance, counter-surveillance, C2-attack and C2-protect.

(a) C2-Attack. C2-attack prevents effective C2 of adversary forces by denying information to the adversary and by influencing, degrading, or destroying the adversary's C2 system.

(b) C2-Protect. C2-protect maintains effective C2 of one's own forces by turning to friendly advantage or negating adversary efforts to deny information to, influence, degrade, or destroy the friendly C2 system.

(5) Amphibious Warfare. Amphibious warfare operations involve both naval and landing forces launching from the sea against a hostile or potentially hostile shore.

(6) Air Defense (AD). AD is the protection of all friendly forces in the assigned AO against hostile air platforms and weapons; i.e., theater ballistic missiles, aircraft, and cruise missiles. Specific missions and objectives are as follows:

(a) Establish and maintain air superiority and assign operating areas of AD units.

(b) Maintain air defense surveillance consistent with sensor capabilities, tactical threat/situation, and geography.

(c) Detect and identify all air contacts penetrating the area of interest.

(d) Successfully engage all designated hostile air contacts posing a threat to the BG.

(e) Conduct joint/multinational AD operations in all emission control conditions and integrate airspace deconfliction/coordination procedures with US/allied forces.

4. Organization, Facilities, and Personnel

a. Background. This section describes how the Navy is organized to execute its operational tasks and to control airspace users supporting these tasks. The unique nature of maritime operations shapes the organization of US naval forces and affects how these forces fit into the overall unified military command structure. Vast distances, wide dispersion of forces with associated C2 challenges, and the complexities of conducting warfare in a three-dimensional battlespace characterize maritime operations.

b. Chain of Command. The operational chain of command flows from the unified or specified commander, through the fleet commander-in-chief, to the numbered fleet commanders. Below the numbered fleet level, commands are organized by operational tasks (task force, task group, and task unit) to conduct the naval warfare tasks mentioned above. These commands are the basic operating units of naval warfare.

(1) Officer in Tactical Command (OTC). Under the composite warfare commander (CWC) concept, the OTC, who is the senior naval commander, has overall C2 of assigned forces. He is responsible for accomplishing the mission, allocating assigned forces, and providing for safety of the force. He employs the CWC concept to aggressively wage combat operations against air, surface, and subsurface threats, while carrying out the primary mission of his force. Depending on the mission and size of the force, the OTC may act as the CWC himself or assign more than one CWC. The CWC may delegate authority for each naval warfare task to a subordinate warfare commander, who in turn directs the actions of assigned naval forces in the execution of that warfare task.

(2) CWC Concept.

(a) Command Structure. Figure B-1 shows the CWC command structure. Under the CWC, there are five subordinate warfare commanders responsible for directing actions in each of the naval warfare tasks.

- Undersea Warfare Commander (USWC).
- Surface Warfare Commander (SUWC).
- Strike Warfare Commander (STWC).

- Command and Control Warfare Commander (C2WC).

- Air Defense Commander (ADC).

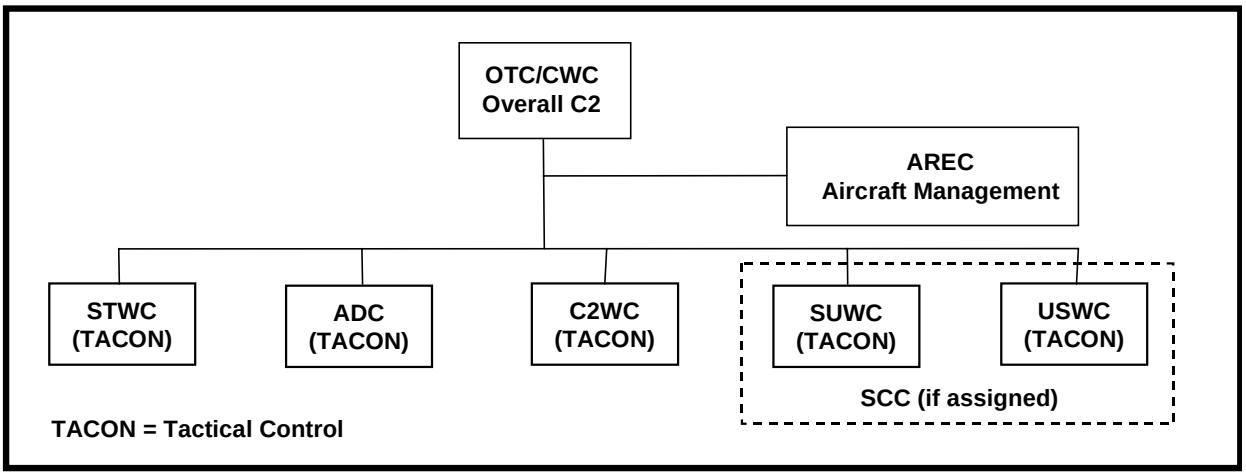

Figure B-1. Navy Composite Warfare Structure

(b) Doctrine. CWC doctrine requires individual warfare commanders to recognize and effectively counter rapidly developing threats, especially in a multi-threat environment, with respect to their assigned warfare task.

(c) Command Authority Delegation. A wide range of options is available to the CWC in delegating command authority to the subordinate warfare commanders. These options range from full delegation of authority to no delegation at all, depending on the threat and tactical situation. Regardless of the authority delegated, the CWC always retains the option to control by negation. Control by negation is a C2 philosophy in which a subordinate commander has the freedom of action to direct and execute those operations necessary to accomplish assigned and implied missions unless the superior commander overrides specific actions and operations.

(3) Subordinate Warfare Commanders.

(a) USWC. The USWC is usually a destroyer squadron (DESRON) commander. His responsibility is protection of the BG from undersea threats. He is normally collocated with the CWC onboard the aircraft carrier (CV) but may also be located on a smaller USW-capable platform. The CV provides the best USW tactical picture, C2 equipment, and information processing systems.

(b) SUWC. The SUWC may also be a DESRON commander and the commanding officer of the CV. His responsibility is to protect the BG from surface threats. He is normally located on an SUW-capable platform, but because of its connectivity, he may be located on the CV. In low surface/subsurface threat environments, the responsibilities of the USWC and the SUWC are often combined into a single sea combat commander (SCC).

(c) STWC. The STWC directs offensive power projection operations against land-based targets. The STWC, normally the carrier air wing commander (CAG) located on an aircraft carrier, coordinates strike and support aircraft, NSFS, and TLAMs, in support of contingency operations or a theater campaign.

(d) C2WC. The C2WC directs the management and exploitation of the electromagnetic and acoustic spectra. The CWC normally retains the duties of the C2WC, and a member of the CVBG staff, typically an O-6, performs them. The C2WC develops the C2W strategy for the force, controls the electronic combat aircraft and shipboard systems involved in the destruction or neutralization of electromagnetic targets, and coordinates force, theater, and national surveillance assets to enhance friendly battle space management.

(e) ADC. The ADC directs air defense operations. The ADC, usually located on an AEGIS cruiser/destroyer, coordinates fighter aircraft, airborne early warning aircraft, and air defense missiles to protect the BG from air and/or missile attack. In a joint environment, the ADC may be assigned the role of RADC or SADC coordinating with airborne early warning assets to provide a single integrated air picture to the AADC. This allows the ADC to position supporting naval units assigned to maintain track integrity, identify friendly aircraft, and positively identify all aircraft operating in the defended area before they enter the vital area. The ADC also has authority to assign capable naval forces to perform duties as an air control unit (ACU). In this role, ACUs assist friendly aircraft in the AD area, providing vectors and updated information to en route and mission-complete aircraft. AEGIS cruisers, destroyers, and airborne early warning aircraft are typically assigned duties as an ACU. Smaller ships such as guided missile frigates also have a limited capability to serve as an ACU. The ADC's overall responsibilities include:

- Plan the protection of the force against the air threat. This includes assessing enemy capabilities, defining requirements to counter the anticipated threat, and determining optimal tactics for assets assigned to the AD mission.

- Execute tactical control of assigned assets.

- Maintain AD battle watch.

- Collect and disseminate tactical information and intelligence pertinent to AD operations.

- Coordinate AD plans and actions with the CWC and other warfare commanders and coordinators.

- Assist in coordinating and promulgating rules of engagement, air coordination areas, special zones, and return-to-force (RTF) procedures.

- Assist in establishing, publishing, and implementing ACMs.

(4) Supporting Coordinators. Supporting coordinators assist warfare commanders in accomplishing their warfare tasks by completing specific functions. Supporting coordinators differ from the subordinate warfare commanders in one very important aspect. When authorized by the CWC, the subordinate warfare commanders have tactical control of resources assigned and may autonomously initiate action. Supporting coordinators execute policy but do not initiate autonomous actions. There are several supporting coordinators. Those that affect airspace coordination and control include the Air Resources Element Coordinator (AREC), Helicopter Employment Coordinator (HEC), TSC, and Launch Area Coordinator (LAC). The TLAM section in Chapter IV discusses the TSC and LAC functions.

(a) Air Resources Element Coordinator (AREC). The AREC is a resource manager, coordinator, and air advisor to the OTC/CWC. The commanding officer of the ship embarking the OTC/CWC is normally designated the AREC. The AREC—

- Manages and coordinates the distribution of aircraft carrier assets.

- Publishes and distributes the air plan, which reflects the allocation of forces.

- Apprises the CWC and other warfare commanders and coordinators of carrier air operations.

- Ensures all aircraft (both attached and assigned) are properly briefed. Supporting aircraft receive pertinent information on the overhead message, operational tasking message, and the AD intentions message, ATO/SPINs/ACP.

Note: The term attached aircraft refers to those aircraft launched and recovered from the battle group unit, such as the CV(N), large deck amphibious ship, or helicopter-capable surface combatant. Assigned aircraft refers to air assets that warfare commanders have tactical control of for specific missions, such as naval maritime patrol aircraft. Supporting air assets originate from units or bases external to the battle group, such as USAF or allied aircraft supporting a NCC.

(b) HEC. When two or more ships other than the carrier are equipped with helicopters, a central scheduling authority to control flight operations from these ships may be useful. In a multi-threat environment the assets controlled by this coordinator may be in demand by both the USWC and SUWC. HEC responsibilities are generally assigned by the OTC/CWC to the USWC, SUWC, or the SCC.

c. Carrier Air Wing Capabilities Available for MEU (SOC) Support. Carrier-based aviation is optimized to meet the CVBG mission by focusing on power projection, control of the environment and information gathering. The following aircraft carrier capabilities are available to assist the ARG/MEU (SOC) in accomplishing its assigned mission.

(1) Offensive Air Support/Power Projection. The following capabilities may be required to support the ground commander.

(a) Strike warfare.

(b) Deep air support.

(c) Close air support.

(d) Suppression of enemy air defenses.

(e) Electronic attack.

(f) Offense counter air.

(2) Defensive/Environmental Control. The following capabilities are available to create and maintain a combat environment where the CATF/CLF can focus resources on mission accomplishment.

(a) Air defense/defensive counter air.

(b) Surface warfare.

(c) Undersea warfare.

(3) Information Gathering/Airborne Early Warning/Air Control. The following missions enhance the battlespace awareness for the CATF/CLF.

(a) Airborne early warning.

(b) Electronic warfare.

(c) Reconnaissance.

(d) Electronic intelligence.

(4) Support Missions. These missions are force multipliers for the CATF/CLF.

(a) Combat search and rescue.

(b) Air-to-air refueling.

d. BG Air Assets (Non carrier air wing). Air-capable ships within a standard CVBG carry attached helicopter assets with capabilities to provide ARG support. Combat logistics force ships carry CH-46 helicopters for re-supply missions, which are not usually tasked with requirements beyond the CVBG. Light Airborne Multipurpose System (LAMPS) capable ships carry one or two SH-60B helicopters which have a significant low-altitude airborne early warning, radio relay, forward-looking infrared, Penguin and Hellfire capability. LAMPS helicopters working in conjunction with AH-1W Cobras make a powerful counter to small-boat attacks. Additionally, LAMPS helicopters can provide very capable flight-following for SOC missions.

e. AD Integration. Since naval air assets are limited to the attached air capabilities of the BG, the ACMs are instituted not so much to deconflict air traffic, but to support identification requirements established by the ADC to support fleet air defense. By its very nature, AD is totally integrated with the ACP; ACMs are totally integrated and supportive of the AD effort.

f. Deconfliction and Fratricide Prevention. In naval operations, airspace deconfliction and fratricide prevention are normally accomplished by positive or procedural means for aircraft departing or entering fleet-defended airspace.

(1) Positive and Procedural Control. Positive means (electronic control) is accomplished by vectoring aircraft with verbal communications or the data link. Procedural means cover a wider variety of options. For example, aircraft departing or reentering fleet-defended airspace use defined routing called return-to-force (RTF) corridors. These corridors specify the profile to be used by aircraft in terms of altitude, speed, tactical air navigation radials, and IFF replies. Aircraft may be required to execute entry into the fleet-defended airspace via a geographically defined entry point, then into a defended corridor as a further aid for deconfliction/identification.

(2) RTF Corridors. Aircraft maneuvers designed to break closure to the battle group are predefined for execution by aircraft as set points for defense assets. RTF corridors, entry and egress points, and break-closure maneuvers (if used) change daily or periodically during each day, depending upon the movements of the naval force or the intensity of operations within the airspace concerned. These RTF corridors resemble minimum risk routes. Missions that typically employ these profiles include overland strike operations, long-range fighter support, offensive or defensive counter air missions, and joint supporting missions such as those involving AWACS and Air Force tankers or land-based maritime patrol aircraft. RTF routing procedures range from simple to complex and can be activated singly or in multiples. These procedures enhance flexibility in operations and ease entry of non-naval and/or battle-damaged aircraft into fleet airspace.

(3) Fleet-Defended Airspace. Aircraft conducting operations solely within the fleet-defended airspace typically operate autonomously in preassigned and coordinated areas or under control of a designated control agency for immediate missions. The assigned control agency acts as a deconfliction agent for the aircraft under its control. Operations of this type include missions such as undersea warfare search and attack; surface warfare search, surveillance, coordination and attack; and other sea control and interdiction missions.

g. Naval Force Integration. Each major air-warfare-capable combatant vessel is equipped with a tactical data system (TDS) that consolidates the input of all shipboard sensors (radar, IFF, sonar, electronic signal intercept, etc.) and displays this information to decision-makers for action. Shipboard weapons control functions are highly integrated within the TDS to provide a rapid engagement capability. Each TDS is capable of Link-11 and/or Link-16 (tactical digital information link [TADIL] TADIL-A/J) exchange within the naval force and with all service TADIL-A capable platforms and sites. For ease of illustration, each shipboard TDS installation combines the functions of the CRC (USAF), TACC/TAOC (USMC), as well as fire direction/ADA interfaces with Patriot battery control. Moreover, Link-4A and/ or Link-16 (TADIL-C/J) interface with TDS-equipped ships and aircraft completes the integration of all airborne and surface weapons within the naval component.

5. Communications

a. Background. Under the CWC concept, and when a specific mission has been assigned, the CWC normally promulgates general duties, functional assignments, and command guidance using a general operation message referred to as an OPGEN. OPTASKs detail the duties, responsibilities, and procedures for accomplishing each warfare area. Subordinate warfare commanders, in turn, use OPTASKs to deal with specific instructions for their warfare areas. The ADC uses the OPTASK air defense plan to assign duties and responsibilities in his area. The air defense plan provides operations guidance, detailed policies, and procedures.

b. Communications Nets. During the planning and operational phases, subordinate warfare commanders apprise the CWC of the situation, using a secure voice command net. The ADC exercises C2 via the air warfare coordination and reporting net, as depicted in Figure B-2.

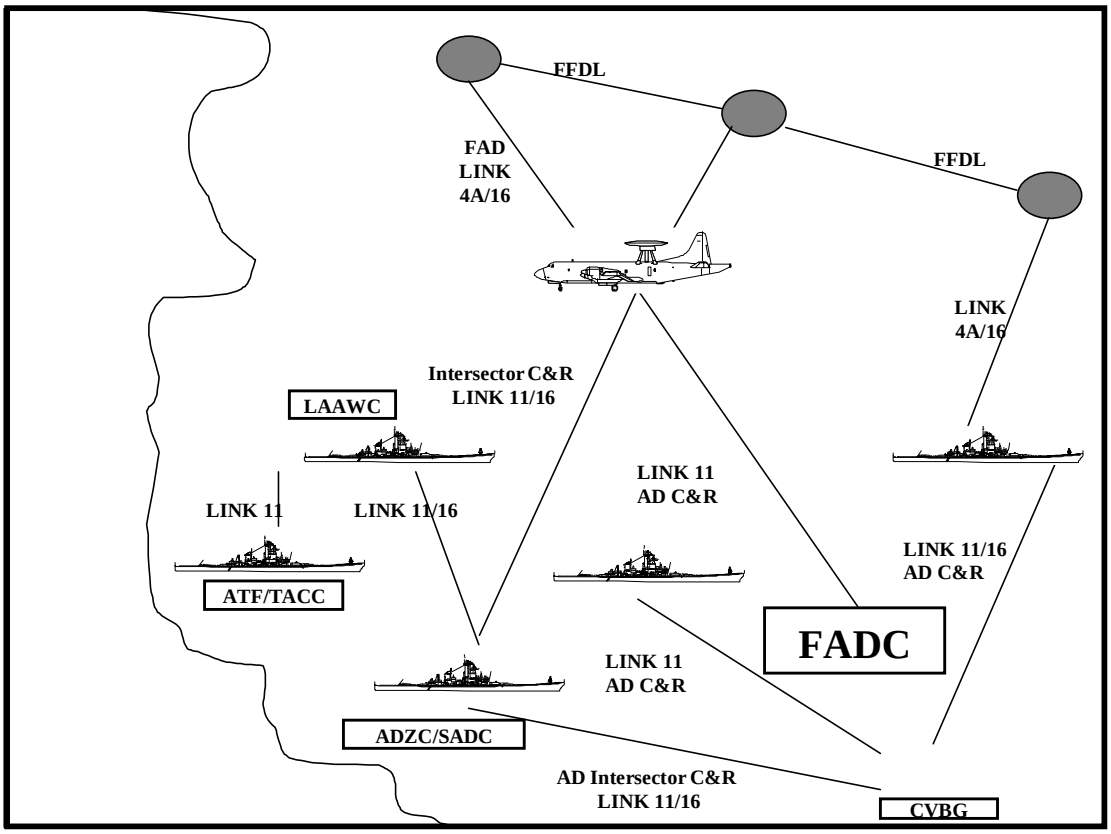

Figure B-2. Navy Integrated Airspace C2

c. Emission Control (EMCON). The C2WC establishes the specific EMCON policy in OPTASK C2W. When and where EMCON is initiated depends on the threat, air activity, training requirements in peacetime, and so forth. EMCON is defined by stages. The C2WC may use Navy standard (ALPHA, BRAVO, etc.), may tailor it to accommodate systems unique to the battle group. Aircraft procedures are predetermined and promulgated in order to effect safe launch and recovery during EMCON conditions.

Appendix C

AIR FORCE OPERATIONS

1. Background

The Air Force airspace C2 system is a reflection of the aerospace power principle of centralized control and decentralized execution. The Air Force Theater Air Control System (TACS) provides the commander, Air Force Forces (COMAFFOR) with the means to achieve this cornerstone C2 principle. Advances in communications and data link capabilities give commanders the ability to tailor the configuration of the TACS to meet the dynamics of an operation. While sometimes configured differently in various theaters of operations, basic C2 and airspace management functions performed by the TACS are the same. The TACS is the COMAFFOR's executor for the ACP and ACO.

2. Doctrine

The primary objective of airspace control in a combat zone is to maximize the effectiveness of combat operations while imposing minimum restrictions on the capabilities of any Service or functional component. Ideally, a safe, efficient, and flexible airspace control system is established within the AOR/JOA prior to the onset of air operations. The airspace of the combat zone is a crucial dimension of the battlespace and is used by all components of the joint/multinational force to conduct assigned missions. Basic principles of airspace control in the combat zone are described below.

(1) Unity of Effort. Unity of effort is achieved primarily through C2 and centralized planning by an ACA. The ACA should coordinate with joint force components and HN liaisons prior to air operations. The ACA must integrate information flow throughout the system to provide necessary information for airspace control throughout the AOR/JOA.

(a) Unity of Command. Unity of command is imperative in employing aerospace forces effectively. Unity of command is the interlocking web of responsibility that is a foundation for trust, coordination, and the teamwork necessary for unified military action. Vesting appropriate authority and responsibility in a single air commander provides for the effective exercise of leadership and power of decision over assigned forces to achieve a common objective. The JFACC, as the central authority for the air effort, develops strategies and plans, determines priorities, allocates resources, and controls assigned aerospace forces to achieve that objective. Having one commander with responsibility and authority to coordinate and integrate air defense and airspace control greatly enhances the effort to gain and maintain control of the aerospace environment. Assigning the roles of ACA and AADC to the JFACC further unifies efforts across the spectrum of airspace use. Through central authority, the JFACC gives unity and coherency to the defensive effort and to controlling the aerospace environment. The planned and coordinated use of airspace gives flexibility to the self-defense of surface forces and helps prevent inadvertent attacks on friendly forces. Coordinated air defense and airspace control also aids the execution of offensive attacks against an enemy's warfighting potential.

(b) Centralized Control and Decentralized Execution. Centralized control and decentralized execution of aerospace forces helps make those forces responsive, serves to ensure that forces are properly used and integrated, and fosters initiative at the action level. While centralized control guides actions to support a broad plan of action, decentralized execution provides the flexibility for subordinate commanders to use ingenuity and initiative in attacking targets.

(2) Simplicity. Airspace control techniques should be simple for easy communication and understanding. Complex guidance and procedures leads to misinterpretations and possible confusion among users.

3. Missions and Functions

The following range of Air Force missions require airspace and airspace control:

a. Counterair. Counterair operations attain and maintain a desired degree of air superiority by the added destruction or neutralization of enemy forces.

b. Counterspace. Counterspace operations are carried out to achieve space control objectives by gaining and maintaining control of activities conducted in or through the space environment.

c. Counterland. Counterland operations are conducted to attain and maintain a desired degree of superiority over surface operations by the destroying and neutralizing enemy surface forces. It includes both interdiction and close air support (CAS).

d. Countersea. Countersea functions are an extension of Air Force functions into a maritime environment. Identified specialized collateral functions are sea surveillance, anti-ship warfare, protection of sea lines of communications through antisubmarine and anti-air warfare, aerial minelaying, and air refueling in support of naval campaigns. Many of these collateral functions translate to primary functions of aerospace forces such as interdiction, counterair, and strategic attack.

e. Strategic Attack. Strategic attack operations are based on the COMAFFOR's assessment of the overall threat, the mission, forces available, and other considerations of the operational situation. These operations are conducted at a time and place of the friendly force's choosing. Strategic attack operations will attack offensive or defensive, strategic or center-of-gravity targets, primarily on the surface.

f. C2. C2 is the exercise of authority and direction by the commander over assigned and attached forces to accomplish the mission. Specifically, C2 includes the battlespace management process of planning, directing, coordinating, and controlling forces and operations. C2 involves the integration of the systems of procedures, organizational structures, personnel, equipment, facilities, information, and communications designed to enable a commander to exercise C2 across the range of military operations.

g. Airlift. Airlift operations involve transportation of personnel and materiel into the theater as well as within the theater.

h. Air Refueling. Air refueling operations are for in-flight refueling of fighter, bomber, and airlift aircraft.

i. Special Operations. Special operations are for conducting unconventional warfare, direct action, special reconnaissance, counter-terrorism, foreign internal defense, psychological operations, and counterproliferation, normally organized into units capable of independent as well as supporting operations.

j. Intelligence, Surveillance, Reconnaissance (ISR). ISR operations use sensors or visual observation to obtain information on enemy movements, threats, and capabilities to provide commanders with battlespace awareness.

k. Combat Search and Rescue (CSAR). CSAR operations are conducted to recover distressed personnel during wartime or military operations other than war (MOOTW).

l. Theater Air Control System. The TACS is the Air Force's executor of the ACP/ACO.

4. Organization, Facilities and Personnel

a. Background. The TACS is a hierarchy of organizations and C2 systems that plan, direct, and control theater air operations and coordinate air operations with other Services and allied forces. Organization of the TACS is derived from the basic qualities of aerospace power— flexibility, range and speed. The following elements of the TACS coordinate, integrate, and regulate airspace activities within the Air Force. See Figure C-1.

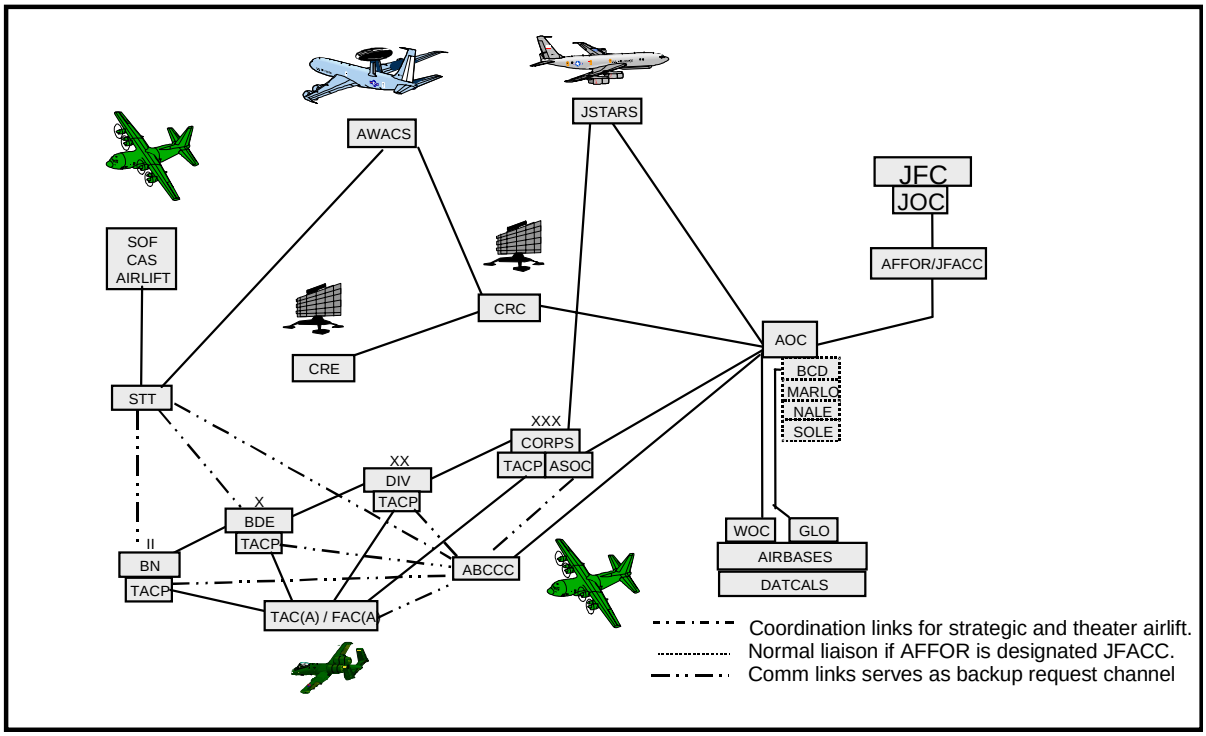

Figure C-1. Theater Air Control System

b. Joint Air Operations Center (JAOC). The JAOC is the joint air operations C2 center that plans, directs, and executes joint air operations in support of the JFC's operation or campaign plan. Depending on the theater and contingency and whether the mission involves war or MOOTW, the composition, organization, and functions of the JAOC may need to be tailored. However, the basic framework still applies. Though the use of the word *combat* is used in the title of some of the divisions and branches, the activities in supporting joint air operations may span the range of military operations. These activities may just as well involve planning to accomplish non-combat objectives in a MOOTW scenario. The focal point for airspace control issues within the JAOC is the airspace management and control team, which includes personnel from the combat plans division and the combat operations division. A brief description of divisions and branches within the JAOC follows.

(1) Strategy Division. This division develops, refines, disseminates and assesses the progress of the JFACC's aerospace strategy, concentrating on long-range planning of aerospace operations for theater activities. The strategy division normally comprises two teams—strategy plans and operational assessment. This division is located in the JAOC and reports to the director in order to maintain continuity with JAOC processes. The division maintains a relationship with the COMAFFOR and the JFACC.

(2) Combat Plans Division (CPD). The CPD is responsible for the near-term aerospace operations planning function of the JAOC. This division develops detailed plans for the application of aerospace resources based on JFACC-approved guidance received from the strategy division. CPD is comprised of two teams—the master air attack planning (MAAP) team and the ATO/ACO production team.

(3) Combat Operations Division (COD). The COD is responsible for monitoring and executing "current joint air operations." Actions and decisions that apply to the current air tasking order (ATO) period are executed through the COD. The COD normally assumes responsibility for the joint ATO as soon as it is released. This division executes the ATO.

(4) Air Mobility Division (AMD). The AMD plans, tasks, coordinates, and executes air mobility missions. Located in the JAOC, it is under the supervision of the director of mobility forces. It does not have a direct role in airspace control, but provides expertise to integrate the air mobility mission into the airspace control system. It provides information for the development of airlift corridors and aerial refueling tracks that are incorporated into the ACP and ACO. Additionally, the AMD plays a key reachback role by disseminating the ACP and ACO information to inter-theater mobility assets.

c. Component Liaisons. Each component commander and HN involved in the operation normally provides liaison representation to the JAOC to articulate their requirements for airspace and to provide expertise in the development and execution of the ACP and ACO. Normally, the BCD represents the Army, while the navy and amphibious liaison element (NALE) articulates Navy and Marine interests, unless a separate Marine liaison officer (MARLO) is designated. The special operations component commander is represented by the special operations liaison element (SOLE).

d. Ground TACS (GTACS) Elements.

(1) Control and Reporting Center (CRC). The CRC is directly subordinate to the JAOC and is the senior TACS radar element responsible for decentralized execution of air defense and airspace control. The CRC provides battle management, weapons control, surveillance, identification, and link management. The CRC provides positive and procedural airspace control. The CRC is assigned a geographic sector by the JAOC, within which it manages all defensive air, offensive air and airspace management activities. The CRC is responsible for recommending changes in air defense (AD) warning conditions based on the air situation.

(2) Control and Reporting Element (CRE). The CRE is a mobile radar unit subordinate to the CRC. It is normally forward deployed of the CRC and is used to extend surveillance radar coverage. The CRE may be capable of assuming limited CRC airspace control functions. The CRE provides positive and procedural airspace control.

(3) Air Support Operations Center (ASOC). The ASOC is an element of the TACS directly subordinate to the JAOC, but normally located with an Army corps. The ASOC is responsible for integration of aerospace operations that support the Army commander. The ASOC responds to requests for air support and is also capable of coordinating time-critical targeting within its area. The ASOC plays a major role in airspace control in the corps AO through execution of joint airspace control measures, such as high density airspace control zones (HIDACZs) and minimum risk routes. It deconflicts airspace usage with the corps fire support element, G-3 Air, and A2C2 element.

(4) Tactical Air Control Parties (TACPs). TACPs are the principal Air Force liaison element aligned with Army maneuver units from battalion through corps, and consists of air liaison officers, terminal attack controllers, radio maintenance personnel, supply personnel, fleet management personnel, and information management personnel. TACPs are the extensions of the TACS and remain under the OPCON of the COMAFFOR through the ASOC. They coordinate directly with Army airspace and fire support agencies to deconflict air operations in the ground sector and may employ both formal and informal fire support coordinating measures to prevent fratricide or synchronize air operations with surface fire support. TACPs provide procedural airspace control.

(5) Wing Operations Center (WOC). The WOC is subordinate to the JAOC and functions as the operations center for units assigned/attached to the wing for operations. The WOC is responsible for decentralized execution of the ATO.

(6) Deployable Air Traffic Control and Landing System (DATCALS). DATCALS units at bare base operations within the AOR develop launch and recovery routes, base defense zones, and precision approach control services for the WOC. DATCALS integrates operations with GTACS/ADA units to resolve airspace conflicts and identify intrusions.

e. Airborne Elements of the TACS (AETACS).

(1) Airborne Battlefield Command and Control Center (ABCCC). The primary role of ABCCC is to provide C2 of strike resources that support the land component commander. The ABCCC provides procedural (non-radar) airspace control. It can also function in a limited role as a backup ASOC.

(2) Airborne Warning and Control System (AWACS). AWACS is an airborne early warning and C2 battle management aircraft that provides a high degree of flexibility and survivability in the combat zone. During the initial phase of operations, AWACS can provide airspace control and battle management functions for the JAOC. AWACS is normally subordinate to the CRC, greatly extends the TACS surveillance radar coverage, and provides early combat identification of nonfriendly tracks. AWACS provides positive and procedural airspace control.

(3) Joint Surveillance Target Attack Radar System (JSTARS). JSTARS is an Air Force-Army battle management C2 system subordinate to the JAOC. The system provides Army and Air Force command, control, communications, computers, and intelligence (C4I) nodes with information to support the attack of ground targets. It does this by supplying moving target indicator data and synthetic aperture radar data and by exchanging other mission-related information between JSTARS aircraft, other TACS elements, and Army common ground stations. The system is designed to provide near real-time, wide-area surveillance and targeting information on moving and stationary ground targets to support the land component commander's requirements. However, the JFC determines the most effective use of JSTARS based on the situation and concept of operations. JSTARS is also used to identify opportunities for rapid interdiction and to retarget enemy ground forces in support of the JFACC's theater-wide interdiction responsibility. JSTARS is also capable of supporting air operations, to include CAS, offensive counterair, and other missions spanning the range of military operations, thus enabling the JAOC to establish ACMs in response to the ground threat.

f. Other Elements of the Air Control System.

(1) Forward Air Controller (Airborne) (FAC [A]). The FAC(A) is an airborne extension of the ASOC/TACP and has the authority to direct aircraft delivering ordnance on a specific target. The FAC(A) provides additional flexibility in the battlespace by enabling rapid coordination and execution of air operations. It also enhances the TACS' situational awareness by disseminating information on the flow of aircraft on target. The FAC (A) provides procedural airspace control.

(2) Special Tactics Teams (STTs). STTs are the principal Air Force special operations C2 elements assigned to SOF units. They are also part of theater SOF and are normally under operational control of the joint special operations component commander. Tactical control of STTs to support theater mobility operations may be delegated to the JFACC. STTs establish visual and procedural terminal area airspace control (attack, C2, and air traffic services) at remote assault (drop/landing) zones and austere or expeditionary airfields. They sustain these operations until relieved by other elements.

g. Responsibilities. The TACS can be tailored to support Air Force doctrine of centralized control-decentralized execution from the smallest MOOTW to full-scale combat operations during war. The Air Force will provide the COMAFFOR with the resources necessary to function as the ACA and AADC during small-scale contingency operations that do not require a JFACC, and as the JFACC/AADC/ACA during large-scale operations. Regardless of the scale of operations, the TACS will:

(1) Develop and coordinate the ACP/ACO/ATO.

(2) Coordinate and integrate airspace user requirements within the AOR/JOA.

(3) Maintain a coherent tactical picture.

(4) Maintain close liaison and coordination between airspace control, air traffic control, and area air defense elements.

(5) Reduce the risk of fratricide and balance those risks with the requirements for an effective air defense.

h. Procedures. Common airspace control procedures within the joint force AOA/JOA enhance the effectiveness of air operations. These procedures need to allow maximum flexibility through an effective mix of identification and control measures. The control structure needs to permit close coordination among land, maritime, special operations forces, and air operations and allow rapid concentration of combat power in a specific portion of airspace in minimum time.

i. Reliable and Interoperable C4I. The airspace control system in the combat zone must have a reliable, jam-resistant, and secure C4 network. Coordinated and detailed planning is required to ensure that communications systems and procedures are interoperable and compatible among all airspace managers and users. These procedures should be—

(1) Survivable, sustainable and redundant.

(2) Capable of supporting day, night, and all-weather operations.

j. Execution. The elements of the TACS along with other components' forces use the ACO to execute the airspace control function. Changes to the ACO are published on an as-needed basis.

(1) Airspace Deconfliction Procedures. Airspace deconfliction is accomplished by the airspace management and control team. The CPD airspace management planners resolve conflicts during the planning cycle, whereas the COD airspace control cell handles real-time conflicts. Deconfliction is achieved by time, altitude, space, and withdrawal of the request by one of the airspace users, or acceptance of the risk.

(2) Integration with AD. To minimize the risk of friendly AD weapons engaging friendly aircraft, the Air Force C2 organization is structured to accommodate air defense operations coincident with airspace control. Air defense functions of weapons control, surveillance, and identification are inherent in the TACS, from the centralized facility at the JAOC, down through the execution capability at the CRC, it's subordinate units, and AWACS.

(3) Integration of AD and Airspace Control in the JAOC**.** Airspace control and AD functions are integrated in both the combat planning and combat operations cells. In the CPD, the ground and airborne C2 planning staff officers and other Service liaison officers integrate AD considerations such as minimum risk routes, identification friend or foe/ selective identification feature modes and codes, fighter altitudes missile engagement zones, fighter engagement zone, and joint engagement zone areas for airspace control in publishing the ATO, ACO, and ACP. In the COD, the senior operations duty officer is responsible for the execution of airspace control unless a senior air defense duty officer (SADO) is appointed. In such a case, the SADO is responsible for the air defense portion of air operations. This organizational arrangement and a further description of the specific duties of the positions in the AOC are found in AFTTP 3-1, Vol. 26.

5. Communications and Information Management

The communications network has improved significantly, enhancing the reliability, security, and timeliness of information flow in the theater of operations. These enhancements (voice and data) have enabled AETACS to operate directly under the JAOC, with AWACS operating in lieu of the CRC, and ABCCC functioning as an alternate ASOC (in a limited capacity), providing commanders with a variety of employment options.

a. Voice Communications. Voice is the primary mode of communications between airspace C2 elements and airspace users. Principal transmission means include VHF, UHF, HF, and secure communications.

b. Tactical Digital Information Links (TADILs). TADILs are standardized communication links, approved by the Joint Chiefs of Staff. They are suitable for transmission of digital information. All Services use these links primarily for C2 of the AD network. Since the nodes for AD are also the nodes for airspace control in the JAOC, these rapid data transmission means can support airspace control as an ancillary function. Links that may be used to facilitate executing airspace control are TADIL-A/Link-11; TADIL-B/ Link-11B; TADIL-C/Link-4; TADIL-J/Link-16. The joint tactical information distribution system (JTIDS) includes interim JTIDS message specifications and Army tactical data link.

c. Theater Battle Management Core System (TBMCS). TBMCS is the primary C2 tool for theater integration of air assets. TBMCS is used to organize intelligence, build and disseminate the ATO/ACO, monitor and control ATO/ACO execution, track progress of the air war, and to control all air activity under the JFACC. TBMCS incorporates the former contingency theater automated planning system, wing C2 system, and combat intelligence system functionality. It is interoperable with the Global Command and Control System.

Appendix D
UNITED STATES MARINE CORPS OPERATIONS

1. Background

National military strategy, based on deterrence and forward defense, places a premium on rapid deployability of forces; forces organized to deploy in support of national interests wherever they are threatened. As the scope of US security interests continues to grow and the possibility of worldwide regional conflict increases, while permanent US military presence decreases worldwide, the demand for a force capable of projecting power increases. Military strategy, with new emphasis on deterrence through expeditionary power projection, relies heavily on maritime forces able to respond to a wide variety of conflicts. The Marine Corps, through the Marine air-ground task force (MAGTF), is designed to provide that capability. The flexible and strategically transportable forces operate across the spectrum of conflict with minimum notice. This appendix describes how the MAGTF commander employs his aviation combat element, (which includes aircraft and the Marine Air Command and Control System [MACCS]) to achieve that capability.

2. Doctrine

The Marine Corps employs its forces as a MAGTF. Marine Corps forces (MARFOR) are the residual for all forces that constitute a MAGTF. The three basic MAGTFs that are deployment options are the Marine expeditionary force (MEF), Marine expeditionary unit (MEU), and special purpose Marine air-ground task force (SPMAGTF). The composition and size of the MAGTF may vary, but the organizational structure is always a single command element (CE), a ground combat element (GCE), an aviation combat element (ACE), and a combat service support element (CSSE). See Figure D-1.

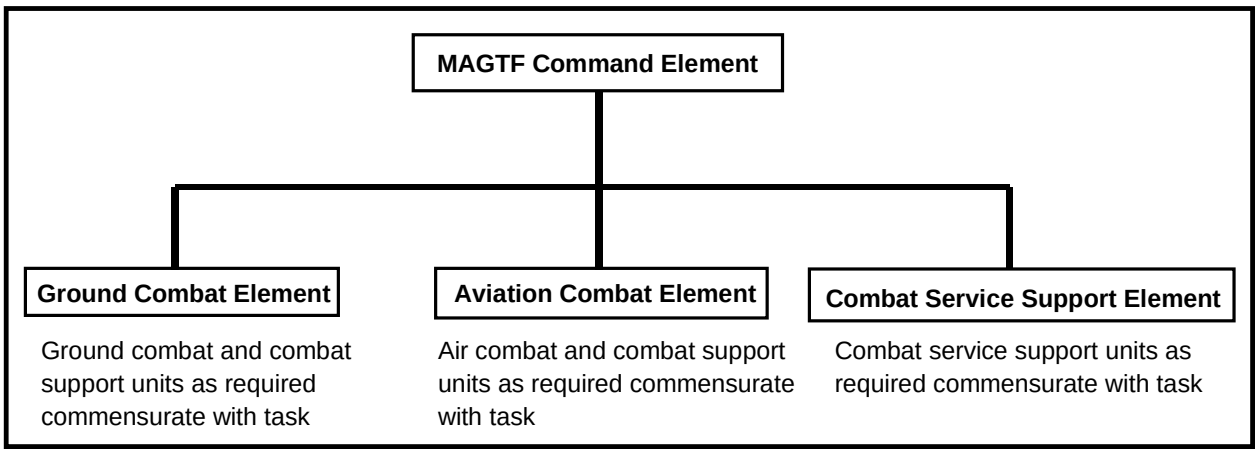

Figure D-1. Organization of Marine Air-Ground Task Force

These task-organized combined arms forces are rapidly deployable by amphibious assault ships, strategic airlift, and Military Sealift Command ships. The MEF is the residual for all combat forces within each MARFOR. MAGTFs are trained and equipped to conduct amphibious, land, and air operations. Regardless of the operation, the methods of

centralized command and decentralized control are retained and remain essential to successful integration of combat arms (aviation, artillery, naval surface fire support) in the MAGTF.

3. Missions and Functions

a. Background. The combined arms concept of the MAGTF provides the MAGTF commander with aviation support that is responsive to his needs. Marine aviation is organized to provide the MAGTF with six doctrinal functions: offensive air support (OAS), assault support, air reconnaissance, electronic warfare, antiair warfare (AAW), and control of aircraft and missiles.

b. OAS. OAS includes those air operations conducted against enemy installations, facilities, and personnel to directly assist the attainment of MAGTF objectives by destroying enemy resources or isolating enemy military forces. OAS includes deep air support (DAS) and close air support (CAS).

(1) DAS. DAS is air action against enemy targets at such distances from friendly forces that detailed integration of each mission with fire and maneuver of friendly forces is not required. DAS missions are flown on either side of the fires support coordination line.

(2) CAS. CAS is air action against hostile targets that are in proximity to friendly forces and require detailed integration of each air mission with the fire and movement of those forces.

c. Assault Support. Assault support is the use of aircraft to provide tactical mobility and logistics support for the MAGTF, movement of high-priority cargo and personnel within the immediate AOR/JOA, refueling of aircraft in flight, and the evacuation of personnel and cargo.

d. Air Reconnaissance. Air reconnaissance is the acquisition of intelligence information by employing visual observation and/or sensors in air vehicles.

e. Electronic Warfare. Electronic warfare is any military action involving the use of electromagnetic and directed energy to control the electromagnetic spectrum or to attack the enemy. The three major subdivisions within electronic warfare are electronic attack, electronic protection, and electronic warfare support.

f. AAW. AAW is action required to destroy or reduce to an acceptable level the enemy air and missile threat. AAW includes such measures as the use of interceptors, bombers, antiaircraft guns, surface-to-air weapons, and electronic countermeasures and the destruction of the air or missile threat both before and after it is launched. Other measures taken to minimize the effects of hostile air action are cover, concealment, dispersion, deception (including electronic), and mobility.

g. Control of Aircraft and Missiles.

(1) Background. Control of aircraft and missiles is the coordinated employment of facilities, equipment, communications, procedures, and personnel that allows the ACE commander to plan, supervise, direct and control the efforts of the ACE to support the accomplishment of the MAGTF's mission.

(2) Combined Arms Philosophy. The control of aircraft and missiles function allows Marine aviation to provide the MAGTF commander with a wide variety of aviation-tailored solutions, maintaining an ethos of combined arms operations. Combined arms is the full integration of arms in such a way that in order to counteract one, the enemy must make itself vulnerable to another. This combined arms philosophy gives the MAGTF commander the potential to present the enemy with a dilemma by placing it in a no-win situation. Air, sea, and land weapons are fire support resources that play a significant role in the practice of combined arms.

(3) Maneuver Warfare. The combined-arms philosophy is a basic tenet of the maneuver warfare concept. Marine aviation integrated into combined arms or as a separate maneuver element is a vital ingredient in maneuver warfare; whether on land or from the sea. It focuses on decisive concentration of forces, speed, surprise, boldness, and exploitation. The aviation component of the MAGTF that is task-organized into an ACE increases the firepower and mobility of the MAGTF and provides a tool for the MAGTF commander to use in expeditionary power projection.

4. Organization, Facilities, and Personnel

a. MAGTF Commander. The MAGTF commander is responsible for all MAGTF operations but delegates authority for planning and conducting aviation operations to the ACE commander. Aviation operations of the MAGTF are conducted under a system of centralized command and decentralized control. The MAGTF commander exercises air C2 through the ACE commander.

b. Marine Air Command and Control System (MACCS). The MACCS provides the ACE with an inherent capability to conduct airspace integration and the real-time C2 of aviation assets with other supporting arms/airspace users, including surface-to-air weapons, UAVs, or remotely piloted aircraft operating concurrently within a defined airspace. This aspect of Marine aviation is unique. The air C2 system responsible for planning, supervision, direction and execution of aviation and aviation-related matters is an integral component of the ACE—manned, trained, and equipped to operated as an integrated system. As such, the ACE commander has complete authority over all facets of the warfighting capability of aviation and, since it integrates all aviation activity into a single, coordinated system, is flexible and responsive to the dynamic needs of the MAGTF.

c. MACCS Personnel and Equipment. The personnel and equipment required to establish the MACCS are organic to the ACE (the commanding general of each of the four Marine aircraft wings) and are contained within subordinate units of the four Marine Air Control Groups (MACG).

(1) MACG. The MACG is commanded by a colonel and provides the headquarters element. There are three active and one reserve MACG.

(2) Marine Tactical Air Control Squadron (MTACS). The MTACS is commanded by a lieutenant colonel and provides the tactical air command center (TACC) and its associated aviation planning systems.

(3) Marine Air Support Squadron (MASS). The MASS is commanded by a lieutenant colonel and provides the direct air support center (DASC).

(4) Marine Air Control Squadron (MACS). The MACS is commanded by a lieutenant colonel and provides the tactical air operations center, early warning and control center, Marine air traffic control detachments, and personnel and equipment for the sector antiair warfare coordinator.

(5) Low-Altitude Air Defense (LAAD) Battalion. The LAAD battalion is commanded by a lieutenant colonel and provides Stinger and Avenger surface-to-air missile systems.

(6) Marine Wing Communications Squadron (MWCS). The MWCS is commanded by a lieutenant colonel and provides radio, multichannel, tactical telephone subscriber service, and tactical data network communications support internal to the ACE in support of the MACCS.

Figure D-2 shows the relationship between the MACG headquarters element and the organizational combat capabilities derived from within the MACG that comprise the MACCS.

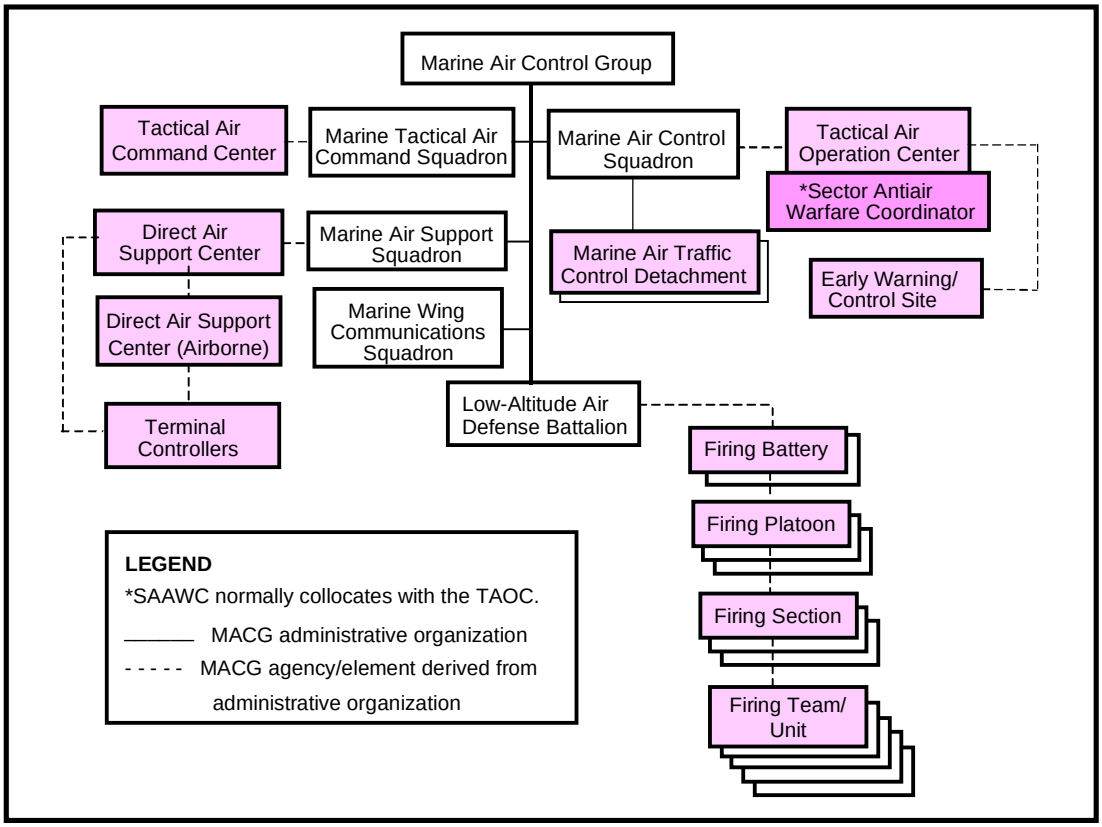

Figure D-2. MACCS and MACG Relationship

d. MACCS Configurations. Since the MACCS is task-organized by the ACE to support the overall MAGTF mission, specific MACCS configurations will depend on the scope and duration of the current ACE mission. A MEF has the capability to perform all six functions of Marine aviation, integrated by an extensive shore-based MACCS. Embarked MEU aviation capability is inherently not as extensive. C2 requirements to support mission objectives are largely provided by the Navy tactical air control system augmented by the task-organized MACG Detachment that is embedded within the MEU.

e. MACCS Agencies. Regardless of the tasking, specific MACCS agencies, or detachments that support the airspace control function, include the TACC, DASC, tactical air operations center (TAOC) (to include ATC requirements), airborne coordinators and controllers, and ground-based terminal air controllers.

(1) TACC. The TACC is the senior MACCS agency and the senior aviation command, control and communications (C3) agency within the MAGTF. It is the service equivalent to the Air Force air operations center. Additionally, it is sometimes referred to as Marine TACC to avoid confusion with its Navy counterpart, the Navy tactical air control center.

(a) Organization. The Marine TACC is the only MACCS agency that exercises command. It serves as the operational command post of the ACE commander as well as the combat operations center for the battle staff. The TACC is the physical facility from which the ACE commander and the battle staff plan, supervise, coordinate, and execute all current and future MAGTF air operations as well as orchestrating the daily combat operations of the entire ACE. The TACC comprises four functional components: future plans, future operations, current operations, and air combat intelligence. Aviation/airspace planners within airspace planning cells within both future operations and current operations conduct airspace planning, integration, and coordination. The TACC requires liaison and Service augments for coordination of joint and combined operations both within future operations and current operations.

(b) Tasks. The TACC integrates these aviation planning and execution functions with the MAGTF command element through direct linkage with the MAGTF combat operations center. As the senior MACCS agency and the senior aviation C3 agency within the MAGTF, the TACC can integrate, coordinate, and direct joint and combined air operations. Due to the inherent scalability of the TACC, especially in joint/combined operations, personnel from the ACE, the MACG, and the MTACS are required to install, operate, and maintain the TACC. Tasks performed within the TACC include:

- Maintaining complete information on the friendly situation, including the air situation (numerous TADIL capabilities) and ground combat information essential to the air effort. The TACC maintains status displays on the availability of organic and subordinate unit equipment (to include aircraft) critical to ACE operations (extensive CTAPS/TBMCS host and remote capabilities).

- Maintaining necessary air and ground information on the enemy.

- Managing all aircraft and surface-to-air weapons in the AO/AOA to ensure a balanced use of assets. This task includes coordinating employment of AD systems with the sector air defense warfare coordinator (SAAWC) in the TAOC. It includes diverting aircraft

from scheduled missions to meet other priorities, to include aircrew briefs for diverted aircraft; establishing alert conditions for ground alert aircraft; and directing and coordinating aircraft missions in support of the MAGTF and other support forces.

- Serving as the operational point of contact between the MACCS and external air control agencies. In carrying out this task, the TACC is responsible for disseminating tactical information to appropriate air control agencies external to the MACCS.

- Providing appropriate AD warning conditions to all major elements of the MAGTF.

- Providing emission control (EMCON) conditions in the AO/AOA and supervising execution of designated electronic warfare operations.

- Coordinating the operations of subordinate agencies to ensure economy and unity of effort in the execution of the MAGTF air plan. This includes generating required ATOs, ACPs, ADPs, ACOs, SPINS, USMTF formatted messages, and other amplifying documents that assist in disseminating tactical information to subordinate or adjacent agencies.

- Prescribing the succession of C2 responsibilities within the MACCS and compensating for any serious degradation within the component agency.

- Providing a means for exchange of information between the battle staff and the ACE HQ for efficient execution and planning of ACE operations.

(2) The MWCS. The MWCS provides communications support to the TACC that is beyond the capability of the MTACS to organically provide. In cases where ground mobile forces satellite communications are required, the communications battalion within the MEF can augment the ACE with personnel and equipment to furnish any required connectivity. The ACE maintains no organic satellite communications capability. Based on the scope and aviation mission tasking, communications support can be furnished by the following methods:

(a) Unit provided (VHF, UHF, HF, TADILs).

(b) ACE provided (HF, LAN/WAN, Multi-Channel, TRI-TAC, Tactical Switchboard/ Phone Subscriber Service).

(c) MEF provided (SATCOM).

(d) JTF J-6 for theater delineated requirements.

(3) TAOC. The TAOC is an air control agency of the MACCS. It is responsible for airspace control and management and cueing for theater ballistic missile defense. Using its organic radars, it provides real-time surveillance of assigned airspace concurrently with navigational assistance, direction, and positive control for friendly aircraft operating within the MAGTF AO or AOA. It performs real-time direction and control of antiair warfare operations involving aircraft and surface-to-air weapons.

(a) Tasks. By collecting and displaying information from its own sensors and external sources (other Marine sensors, Services, and nations), the TAOC controls its portion of the MAGTF-assigned airspace and directs and controls the fires of assigned AD assets. Tasks performed by the TAOC include:

- Providing airspace control, management, and surveillance of the airspace.

- Providing navigational assistance to friendly aircraft.

- Detecting, identifying, and classifying all aircraft within the sector of responsibility.

- Detecting, identifying, and controlling the intercept of hostile aircraft and missiles.

- Recommending employment of assigned weapons and surveillance means to the ACE commander and the battle staff.

- Recommending to the ACE commander and the battle staff, and ultimately to the AADC, the establishment of AD sectors, subsectors, and weapons engagement zones (WEZs) for itself and subordinate agencies and units.

- Deploying sensors and communications systems to provide surveillance in support of the ACP and ADP.

- Displaying and disseminating appropriate air/ground information to designated adjacent, higher, and subordinate agencies such as the AOC, CRC, CRE, AWACS, Patriot information coordination central, AEGIS, Navy TACC, DASC, Marine air traffic control detachment (MATCD), and any additional TAOCs.

- Selecting and assigning appropriate weapons to engage and destroy enemy air threat.

- Controlling the fires of subordinate air defense elements.

- Functioning as an alternate TACC when directed for limited or designated periods.

- Interfacing with adjacent and higher air defense agencies.

- Managing AD resources.

- Coordinating and executing EMCON conditions in the assigned sector.

- Deploying early warning and control sites to supplement or enhance TAOC radar coverage (depending on the tactical situation).

(b) TACC Support. Additionally, due to its location on the battlefield and robust surveillance and communications capabilities, the TAOC may be called upon to enhance the

ability of the TACC to prosecute the MAGTF's deep fight. In this regard, the TAOC provides radar and/or radio connectivity to interdiction platforms operating well beyond the fire support coordination line.

(4) Marine Air Traffic Control Detachment.

(a) Organization. As a detachment organic to the MACS, the MATCD is the primary terminal air control organization within the MACCS. The MATCD is organized and equipped to satisfy air traffic control (ATC) requirements for virtually any type of forward operating base (FOB). Typically, MATCD elements support FOBs ranging in size from an air site to a main air base. An air site is used to pre-position fully loaded and armed aircraft to reduce response times for preplanned and immediate missions. A main air base is capable of handling theater lift assets.

(b) Tasks. Elements of the MATCD provide friendly aircraft with continuous, all-weather, radar approach, departure, and en route ATC services within the assigned controlled airspace. MATCD elements are integrated into the MAGTFs integrated air defense system (IADS) whenever possible. The MATCD—

- Provides radar and nonradar approaches, departures, and en route ATC services within assigned terminal control areas (TCAs). A TCA is airspace of defined dimensions within which ATC services are provided.

- Provides precision and nonprecision aids to navigation.

- Provides Automatic Carrier Landing System Mode I, Mode II, and Mode III approach services for FOB all-weather landings.

- Displays and disseminates appropriate air and ground information to designated adjacent and higher agencies (TADIL-B-capable). Examples include the TACC, TAOC, DASC, and aircraft.

- Serves as the operational point of contact between the MACCS and national/ international civil ATC agencies.

- Establishes the base defense zone as an integral component of the MAGTF IADS.

(5) DASC.

(a) Organization. The DASC has no sensors and is the procedural air control agency of the MACCS that directs and coordinates air operations directly supporting ground forces. Due to its collocation with the senior ground combat element (GCE) fire support coordination center (FSCC), it functions in a relatively decentralized mode of operation; however, the TACC directly supervises it. Its service equivalents are the Air Force air support operations center (ASOC) and the Navy supporting arms coordination center. The DASC processes and coordinates requests for immediate air support and procedurally controls aircraft in support of ground operations within the MAGTF AO or AOA. It coordinates air missions requiring integration with ground forces, including CAS (fixed- and rotary-wing), assault support, UAV, and other designated air reconnaissance missions.

(b) Tasks. The DASC provides the means to process immediate air support requests (joint tactical airstrike request and assault support requests), coordinates air employment with other supporting arms, and manages terminal control assets supporting ground combat and CSSE. DASC tasks include—

- Receiving the ATO from the TACC and coordinating preplanned CAS with the requesting ground unit.

- Receiving, processing, and coordinating requests for immediate CAS.

- Adjusting preplanned schedules and diverting airborne assets as necessary (when the ACE commander delegates such authority and in coordination with the senior FSCC).

- Coordinating the execution of CAS missions with other supporting arms through the appropriate FSCC and, as required, with the appropriate MACCS or external air control agencies (ASOC, SACC afloat).

- Receiving and disseminating pertinent tactical information reported by aircraft performing CAS missions.

- Providing aircraft and other air control agencies with advisory information to assist in the safe conduct of flight.

- Monitoring, recording, and displaying information on CAS missions.

- Maintaining friendly and enemy ground situation displays as necessary to coordinate CAS operations.

- Providing information to other MACCS agencies concerning friendly and enemy situations.

- Referring unresolved conflicts in supporting arms to the senior fire support coordinator.

(6) Air Support Element (ASE). Smaller MAGTFs may not require all of the capabilities offered by the DASC, but they may still need assistance in the control of airborne assets for a limited time in a limited area. An ASE may assist in filling this air control need. An ASE typically functions as a landward extension of the Navy's TACC and the Navy's helicopter direction center. It provides direction for air support assets working in direct support of the GCE and usually works directly with the battalion tactical air control party (TACP).

(7) Direct Air Support Center (Airborne)(DASC[A]). Another possible configuration of the DASC is a DASC (A). With limited communications assets, the DASC (A) is operated from the rear of an airborne C-130 and performs the same functions as its counterpart on the ground.

(8) Airborne Coordinators and Controllers. In the execution of air operations, particularly CAS, situations arise in which the control of aircraft through a ground-based agency is degraded or not possible. Under such conditions, airborne coordinators and controllers may be employed to extend the coverage of ground-based agencies. These airborne assets, not necessarily organic to the MACG but considered part of the MACCS, include the TAC(A), ASC(A), FAC(A), and DASC (A).

(9) Ground-Based Terminal Air Controllers. Ground-based terminal air control agencies, consisting of the previously mentioned applicable MACCS agencies, also include TACPs and helicopter support teams (HSTs), to include landing zone control teams (LZCTs).

(a) TACP. TACPs are organic to divisions, infantry regiments, infantry battalions, and certain separate battalions of a Marine division. The TACP sets up and maintains facilities for liaison and communications between its parent unit and air control agencies. The TACP advises the ground unit commander on employment of supporting aircraft and requests and controls CAS aircraft. All TACPs include forward air controllers with applicable communications equipment.

(b) HSTs. HSTs are task-organized and equipped to establish and operate helicopter pickup and landing zones. HSTs are composed of personnel and equipment from the helicopterborne force and the supporting aviation unit, with augmentation from other units as required. The helicopter control elements of the HSTs are called LZCTs.

f. MACCS Responsibilities. The MACCS provides the C3 architecture required to plan, disseminate, and prosecute air operations within the MAGTF AO or AOA. The MAGTF commander may be assigned control of the airspace that coincides with its AO or AOA if an applicable MACCS has been task-organized commensurate with the mission(s) of the ACE and has the ability to conduct such control. The MACCS provides C3 to facilitate the execution of the six functions of Marine aviation. Effective execution of these functions requires close inter-agency coordination, combined with decentralized control. Through the employment of the MACCS, airspace control is inherent in the conduct of each of these six functions.

g. Procedures. The ACE, through the MACCS, commands and controls air assets supporting the MAGTF. The MACCS is critical since it melds the aviation requirements of the ground commander with the aviation firepower provided by the ACE. This integration of all aviation activity into a single, coordinated system to support a single ground commander is unique within the Department of Defense.

(1) AD Sector. The MAGTF normally assigns an AD sector that coincides or encompasses the MAGTF AO or AOA. The MAGTF commander delegates this responsibility for AD to the ACE commander, due to his inherent capability to provide air defense as part of the six functions of Marine aviation. The air defense sector is characterized by a vital area, surveillance area, and a destruction area, with the destruction area subdivided into various WEZs that are further classified as either fighter engagement zones(FEZs), missile engagement zones(MEZs), or base defense zones (BDZs). Though the ACE maintains assets to establish each type of WEZ, the configuration is situation-dependent and varies based on the mission, friendly AD capabilities, and the enemy threat.

(2) Positive and Procedural Control. The air defense plan is only as effective as the system's ability to correctly identify aircraft in accordance with the rules of engagement without restricting friendly aviation activities or the air defender's ability to engage hostile aircraft. The MACCS relies on both positive and procedural air control means to ensure the continued use of the airspace for MAGTF operations, while retaining the ability to simultaneously engage the threat as required. All friendly aircraft or AAW weapon systems operating in the MAGTF's AO or AOA are under control of a MACCS agency. Each controlling agency, using either positive or procedural control, maintains an updated status of aviation assets under its control thereby contributing to the overall situational awareness within the MACCS. However, the mission, flight profile, or number of friendly aircraft may make positive communications or radar tracks with all friendly aircraft difficult to maintain. Therefore, procedural means must be considered and implemented to support both the airspace control function and the integrated air defense system.

(3) Return-to-Force (RTF) Procedures. RTF procedures must consider the capabilities and limitations of the aircraft as well as the location of defended assets. ACE planners establish procedures that allow friendly aircraft, regardless of the controlling agency's ability to maintain positive communications or radar tracks and its ability to safely operate in, out, and through the MAGTF's airspace. Planning friendly air operations for the MAGTF, while still protecting it from air attack, is a difficult task. Factors to consider are altitude restrictions, airspeed restrictions, maneuverability, IFF capability, navigation equipment, communications capability, self-protection capability, and mission requirements. Having an organic MACCS as an integral component of the MAGTF greatly reduces numerous airspace seams and friction areas associated with aviation operations.

(4) Control Procedures. Planners must thoroughly examine control procedures, especially for safe passage of friendly aircraft through restricted areas. The use of these control procedures should maximize the safety of the defended area while minimizing the possibility of fratricide. Examples of ingress and egress control procedures include use of—

(a) Ingress and egress corridors and routes for both helicopters and fixed-wing aircraft. Examples of these corridors and routes include low-level transit routes and minimum risk routes.

(b) Contact points.

(c) Visual identification.

(d) Electronic identification.

(e) Lame duck procedures (when aircraft cannot comply with established procedures).

(f) Coordinating altitudes.

The MACCS uses standard USMTF templates, such as OPTASKLINK, TACOPDAT instructions, as well as applicable OPORDs, ACPs, ADPs, and so forth, in developing and promulgating the specifics of C2.

(5) Integration with AD. The organization of the MACCS specifically with regard to the TAOC enables the integration of AD with airspace control. The AAW plan, executed by the SAAWC collocated at the TAOC, incorporates numerous ACMs for the mutual benefit of the airspace user and the AD network. With this network in place, the MAGTF commander, through his ACE commander and supporting MACCS, plans, coordinates, controls, and directs air defense and airspace control concurrently with other warfighting endeavors.

5. Communications and Information Flow

No airspace control plan can be successful without addressing the requirement for reliable and redundant communications. The ACE has at its disposal communication assets that provide connectivity for the MACCS to plan and execute aviation operations. Examples of this connectivity are: secure UHF, VHF (AM and FM), and HF single channel radios; multiplex radios; components of the TRI-TAC family of equipment; tactical data networks in the form of LAN/WAN; and other defense information infrastructure-common operating environment compliant information networks. Through the use of these assets, the ACE is provided with voice, data-link, and tactical data network access. Even with access to these various communications systems, availability of rapid and reliable communications and the effective exchange of information over these networks are paramount to success. The MWCS is structured to assist in operational planning for ACE communication requirements and in the identification of communication shortfalls that arise in supporting MAGTF aviation operations. MWCS does not maintain the capability to provide ground mobile force SATCOM connectivity for the ACE. Any requirements in excess of the ACE's organic ability are requested from the communications battalion of the MEF or from the JFC J-6. A nominal communications network linking major elements of the MACCS is shown in Figure D-3. The rapid tactical data exchange relies heavily on TADIL-A, -B, -C, -J, and ground-based data link for airspace control and air defense operations. Although simply demonstrated in the figure, the voice and tactical data networks may be extensive, depending on the complexity and size of the mission. Refer to MCWP 3-25.9, *Marine Air Command and Control System Communications Handbook*, for specific voice communications net use and definitions.

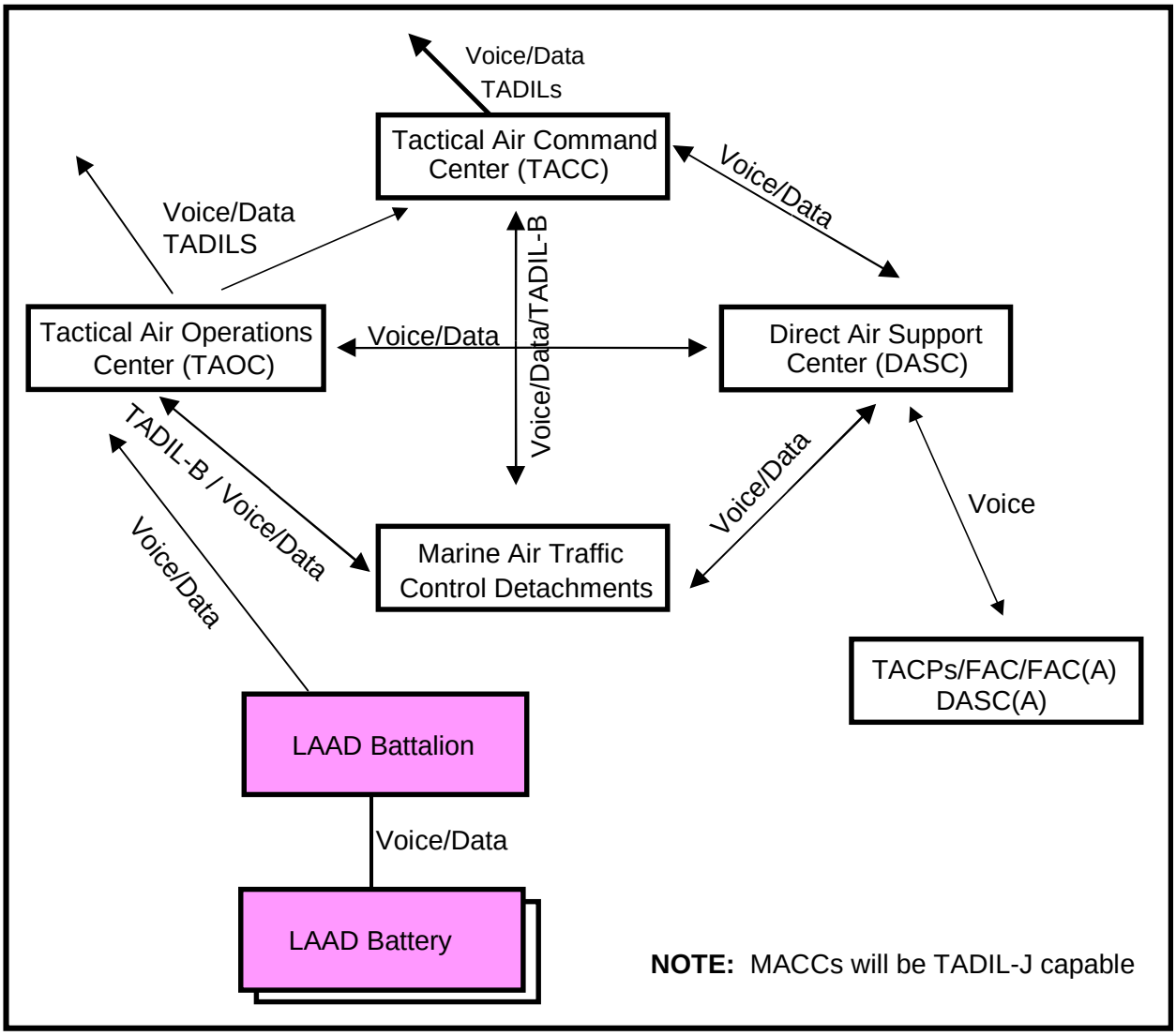

Figure D-3. MACCS Communications Network

Appendix E
SPECIAL OPERATIONS FORCES OPERATIONS

1. Background

The integration of special operations into ICAC2 and the TAGS is a cohesive process that includes specially equipped aircraft, uniquely trained ground forces, increased operational security measures, and extensive liaison among components.

2. Doctrine

Special operations forces (SOF) provide the JFC with unique capabilities to conduct operations across the close, deep, and rear battle areas. Because SOF normally operate in the deep battlespace and share a common environment with the joint air forces, SOF must coordinate closely and integrate using the same ICAC2 infrastructure, TTP, and processes used by all JFC forces. As special operations are inherently joint, SOF must conduct comprehensive and fully integrated coordination and liaison efforts to fully leverage special operations capabilities and avoid fratricide

3. Missions and Functions

a. Organization.

(1) Army Special Operations Forces (ARSOF). ARSOF consist of special forces, ranger, special operations aviation (SOA), psychological operations (PSYOP), and civil affairs. SOA rotary-wing assets include A/MH-6 (CAS/airlift), MH-60 (CAS/airlift), and MH-47 (airlift) aircraft.

(2) Naval Special Operations Forces (NAVSOF). NAVSOF consist of sea-air-land (SEAL) teams, SEAL delivery vehicle teams, special boat units, and patrol coastal ships.

(3) Air Force Special Operations Forces (AFSOF). AFSOF consist of fixed- and rotary-wing assets, special tactics teams (STTs), PSYOP, and foreign internal defense units. AFSOF fixed-wing assets include AC-130H/U Spectre Gunships (CAS/interdiction/ reconnaissance), EC-130H Commando Solo (PSYOP/electronic warfare), MC-130E/H Combat Talon (airlift/tanker), and MC-130P Combat Shadow (tanker/combat search and rescue) aircraft. Rotary-wing assets consist of the MH-53J Pave Low (airlift) helicopter. The AFSOF mission is augmented by KC-135, C-5, and C-141 aircraft and specially trained aircrews from Air Mobility Command. These forces provide an air refueling and/or heavy airlift capability not available from core AFSOF assets.

b. Planning. Based on guidance from the JFC, the joint forces special operations component commander (JFSOCC) allocates forces against strategic or operational tasks and in support of other component commanders. Special operations must coordinate and integrate with conventional operations to enhance mission accomplishment and prevent fratricide. Comprehensive coordination and integration of special operations through interface with the TAGS are essential. During war, SOF will normally require support from

conventional air assets and may provide support to conventional air operations. Support from conventional assets may include extra refueling during deployments or long-range missions, suppression of enemy air defenses (SEAD), diversion of enemy forces, increased airlift capability, or ensuring air and ground defenses for security of landing zones or forward arming and refueling points. Electronic warfare or SEAD, along with CAS, may be required for special operations infiltration or exfiltration missions. CAS is normally preplanned for operations in the deep battle area. Detailed planning is required to have strike aircraft accompany a SOF infiltration, to conduct preplanned CAS missions, or to be on call during actions at an objective area. Missions of this type are carefully coordinated during the deploying SOF unit's mission planning procedures. SOF normally operate on extended planning time lines, normally 96 hours before execution, which should be fully considered during coordination.

c. Airspace Control Measures (ACMs). Due to their unique and specialized nature, SOF missions often require special types of ACMs, or modifications to standard ACM types. Common SOF ACMs include AC-130 gunship orbits, "spider routes" for helicopter infiltration/exfiltration, low-level helicopter aerial refueling tracks (which frequently require fixed-wing tanker aircraft to descend below the coordinating altitude), and no-fire/ restricted-fire areas that shift location over time in order to cover the movement of SOF teams on the ground.

4. Communications

a. C2. The theater special operations commander (SOC) normally exercises operational control of all assigned SOF in theater. When the geographic combatant commander designates a JFC, the theater SOC may be designated as the JFSOCC. The JFSOCC controls assigned SOF as well as any conventional assets provided by the JFC in support of specific missions. Tactical control of SOF air assets is normally exercised by the Air Force special operations component (AFSOC) commander, the Army special operations aviation commander, or the joint special operations air component commander (JSOACC), when designated. The JFSOCC normally designates the SOF component commander with the preponderance of aviation assets and the means to control those assets as the JSOACC. Principal functions which support coordination of airspace in the SOF command system are the special operations liaison element (SOLE), the special operations command and control element (SOCCE), and the STT.

b. Liaisons. Liaisons at the joint special operations task force (JSOTF)/joint special operations air component operations center (JSOAC), represent each SOF airframe/mission. They submit their airspace requirements to the JSOTF/JSOAC combat airspace planners. These requirements are deconflicted with other SOF missions, then passed on through the SOLE to the JAOC's combat airspace cell for deconfliction with conventional forces. When considering SOF airspace requests, JAOC airspace planners must be mindful of the unusual and often innovative nature of SOF missions and accommodate them to the maximum extent possible. In addition, while most SOF missions generally take longer to plan, they are frequently subject to short-notice changes as the operational situation develops.

(1) SOLE. The function of the SOLE is to coordinate, deconflict, and integrate SOF air and surface activities with the JFACC. Because the JFSOCC and the JFACC share a common environment, the deep battlefield, SOF aviation and surface assets must be integrated into joint air planning and operations.

(2) SOCCE. The SOCCE is normally employed when SOF conduct operations in support of a conventional force, such as an Army Corps or a MAGTF. It is collocated with the command post of the supported commander. The SOCCE normally remains under the operational control of the JFSOCC. The SOCCE must ensure airspace requirements are coordinated through the supporting the Army airspace command and control cell and followed through the SOLE.

(3) STTs. Special operations combat controllers assigned to STTs and are trained and certified to perform the terminal control and guidance functions to integrate lethal and non-lethal airpower in the conventional and special operations AO. STTs are capable of conducting visual flight rules/limited instrument flight rules ATC, C2, and special operations terminal attack controller CAS functions. STT liaison elements in the tanker airlift control element and the SOLE assist in coordinating and deconflicting airspace requirements for STTs.

Appendix F
PROCEDURAL AIRSPACE CONTROL MEASURES

1. Background

This appendix provides a description, considerations, and uses of Services' measures for controlling airspace. The following airspace control measures aid in defining airspace control requests, orders, and plans.

2. Procedural Airspace Control Measures

a. Air Corridor.

(1) Description. An air corridor is a restricted air route of travel specified for use by friendly (primarily Army) aircraft and established to prevent friendly forces from firing on friendly aircraft.

(2) Uses. Air corridor procedures are used to route aviation combat elements between such areas as forward arming and refueling points, holding areas, and battle positions. Altitudes of an air corridor do not exceed the coordinating altitude, if established.

(3) Point of Contact (POC). If a coordinating altitude has been established, an air corridor is implemented by the using authority. If a coordinating altitude has not been established, an air corridor is established by the ACA at the request of the appropriate ground commander.

b. Air Defense (AD) Action Area.

(1) Description. An AD action area and the airspace above it is an area within which friendly aircraft or surface-to-air weapons are normally given preference to conduct AD operations except under specific conditions.

(2) Uses. An air defense action area is an engagement area used for preference of a specific weapon system over another without excluding the other from use under certain operational conditions. From an airspace control perspective, an air defense action area provides airspace users with the location of AD areas for mission planning purposes.

(3) POC. Area air defense commander (AADC).

c. Air Defense Area.

(1) Description. An air defense area is a specifically defined airspace for which air defense must be planned and provided.

(2) Uses. An air defense area defines, in an area of operations, the area to be defended.

(3) Considerations. An air defense area is a planning or division-of-responsibility aid; it is not used as an ACM.

(4) POC. AADC.

d. Air Defense Identification Zone (ADIZ).

(1) Description. An ADIZ is airspace of defined dimensions within which the ready identification, location, and control of airborne vehicles are required.

(2) Uses. Associated with nations or AOs, the ADIZ is normally the transition between procedural control areas (outside) and the positive control areas (inside). Typically, ADIZ is used for sovereign national boundaries, or in the case of AOs, for identification into the rear areas.

(3) Considerations. See flight information publications/International Civil Aviation Organization (ICAO) for theater-specific ADIZ and associated procedures and limitations.

(4) POC. AADC.

e. Air Defense Operations Area.

(1) Description. An air defense operations area and the airspace above it is an area within which AD procedures are specified. It may include designation of one or more of the following:

(a) AD action area.

(b) AD area.

(c) ADIZ.

(d) Firepower umbrella.

(2) Uses. AD operations areas minimize mutual interference between AD and other operations. These areas are not used for airspace control but aid planning and division of responsibilities. From an airspace control perspective, these areas provide airspace users with the location of AD operations for mission planning purposes.

(3) Considerations. See individual descriptions for AD action area, air defense area, air defense identification zone, and firepower umbrella in this appendix.

(4) POC. See individual descriptions for AD action area, air defense area, ADIZ, and firepower umbrella in this appendix.

f. Airspace Control Area.

(1) Description. An airspace control area is airspace that is laterally defined by the boundaries of an AO. The airspace control area may be divided into airspace control sectors.

(2) Uses. Airspace control areas are a means of planning or dividing responsibility.

(3) Considerations. Geographically defined, an airspace control area may include political boundaries.

(4) POC. Airspace control authority (ACA).

g. Airspace Control Sector.

(1) Description. An airspace control sector is a subelement of the airspace control area established to facilitate the control of the overall area. Airspace control sector boundaries normally coincide with air defense organization subdivision boundaries.

(2) Uses. An airspace control sector provides airspace control of an area by a component or other airspace control-capable entity best able to provide control in that geographic area.

(3) Considerations. An airspace control sector interface with the airspace control system needs to be developed.

(4) POC. Airspace control sectors are designated by the ACA in consideration of joint force component, host-nation, and multinational airspace control capabilities and requirements.

h. Airspace Coordination Area.

(1) Description. An airspace coordination area is a three-dimensional block of airspace of defined dimensions and used as a restrictive fire support coordinating measure(FSCM).

(2) Uses. An airspace coordination area is used primarily in CAS situations for high-volume fire. Friendly aircraft are reasonably free from friendly surface fires, with artillery, helicopters, and fixed-winged aircraft given specific lateral or vertical airspace within which to operate.

(3) Considerations. Timely implementation of the area is dependent on the ground situation. Burden of deconfliction rests with the ground commander.

(4) POC. The ACA establishes an airspace coordination area at the request of the appropriate ground commander.

i. Amphibious Defense Zone.

(1) Description. An amphibious defense zone is the area encompassing the AOA and additional adjoining airspace as needed for the accompanying naval force for the purpose of air defense.

(2) Uses. An amphibious defense zone provides an antiair warfare area for protection of the amphibious task force.

(3) Considerations. If an amphibious defense zone overlaps other land-based air defense areas, appropriate coordination for division of responsibilities and boundaries must be conducted.

(4) POC. Commander, amphibious task force (CATF).

j. Amphibious Objective Area (AOA).

(1) Description. An AOA is a geographic area, delineated in the initiating directive for purposes of C2, within which is located the objective(s) to be secured by the amphibious task force. This area must be of sufficient size to ensure accomplishment of the amphibious task force's mission and provide sufficient area for conducting necessary sea, air, and land operations. The airspace associated with this area is included in the AOA. When dissolved, airspace control passes to the ACA.

(2) Uses. With respect to airspace control, an AOA allows the CATF freedom of air operations within the AOA.

(3) Considerations. Coordination with nonorganic aircraft for entry, exit, and deconfliction operations within the AOA with operations just outside the AOA normally requires continuous, active involvement of the affected commanders and staffs.

(4) POC. CATF.

k. Base Defense Zone (BDZ).

(1) Description. BDZ is an air defense zone established around an air base and limited to the engagement envelope of short-range air defense (SHORAD) weapon systems defending that base. BDZs establish specific entry, exit, and IFF procedures.

(2) Uses. From an airspace control perspective, a BDZ provides airspace users with the location of the engagement zone for the air defense systems defending a base for mission planning purposes.

(3) Considerations. See short-range air defense zone (SHORADEZ) in this appendix.

(4) POC. AADC.

l. Coordinating Altitude.

(1) Description. A coordinating altitude is a procedural method to separate fixed- and rotary-wing aircraft by determining an altitude below which fixed-wing aircraft normally will not fly and above which rotary-wing aircraft normally will not fly. It may include a buffer zone for small altitude deviations and extend from the forward edge of the communications zone to the forward line of own troops (FLOT). The coordinating altitude does not restrict either fixed- or rotary-wing aircraft when operating against or in the immediate vicinity of enemy ground forces. Fixed- or rotary-wing aircraft planning extended penetration of this altitude will notify the appropriate airspace control facility. However, approval acknowledgment is not required prior to fixed-wing aircraft operating

below the coordinating altitude or rotary-wing aircraft operating above the coordinating altitude.

(2) Uses. Coordinating altitude allows procedural separation of aircraft types.

(3) Considerations. See-and-avoid procedures are used during visual meteorological conditions.

(4) POC. The coordinating altitude is normally specified in the ACP, which is approved by the JFC.

m. Falcon Radials.

(1) Description. Falcon radials are the planned magnetic bearings along which aircraft depart or return to aircraft-capable ships.

(2) Uses. Falcon radials provide tracking, control, and assistance to friendly aircraft within the antiair warfare surveillance area of the battle group.

(3) POC. Air defense commander (ADC).

n. Fighter Engagement Zone (FEZ).

(1) Description. FEZs are normally established in those areas where no effective surface-to-air capability is deployed. These operations usually take place in airspace above and beyond the engagement ranges of surface-based (land and sea), short-range air defense systems, and are an alternative type of engagement operation if the detailed control aspects of joint engagement operations cannot be met. FEZ is an air defense control measure.

(2) Uses. From an AD perspective, a FEZ is normally used when fighter aircraft have the clear operational advantage over surface-based systems. These advantages could include range, density of fire, rules of engagement (ROE), or coordination requirements. From an airspace control perspective, a FEZ provides airspace users with the location of the engagement zone for fighter aircraft for mission planning purposes.

(3) Considerations. Coordination and flexibility within the combat airspace control system may be a limiting factor with a FEZ. Under FEZ operations, surface-to-air missile systems will not be allowed to fire weapons unless targets are positively identified as hostile and assigned by higher authority, or unless they are firing in self-defense.

(4) POC. AADC.

o. Firepower Umbrella.

(1) Description. Firepower umbrella is an area of specified dimensions defining the boundaries of the airspace over a naval force at sea within which the fire of a ship's antiaircraft weapons can endanger aircraft, and within which special procedures have been established for the identification and operation of friendly aircraft.

(2) POC. ADC.

p. High-Altitude Missile Engagement Zone (HIMEZ).

(1) Description. Normally applied to long-range surface-to-air missiles, a HIMEZ will limit the volume of airspace within which these weapons may conduct engagements without specific direction of the AADC. HIMEZ is an air defense control measure.

(2) Uses. From an AD perspective, a HIMEZ is normally used when a high-altitude missile system has a clear operational advantage over using aircraft. These advantages could include range, C2, ROE, or response time. From an airspace control perspective, a HIMEZ provides airspace users with location of the engagement zone of a high-altitude missile system for mission planning purposes.

(3) Considerations. Design of the HIMEZ is contingent on specific weapon system capabilities.

(4) POC. AADC.

q. High-Density Airspace Control Zone (HIDACZ).

(1) Description. HIDACZ is an area in which there is a concentrated employment of numerous and varied weapons or airspace users. A high-density airspace control zone has defined dimensions that usually coincide with geographical features or navigational aids. Access to and air defense weapons status within a high-density airspace control zone is normally approved by the appropriate commander. See Figure F-1.

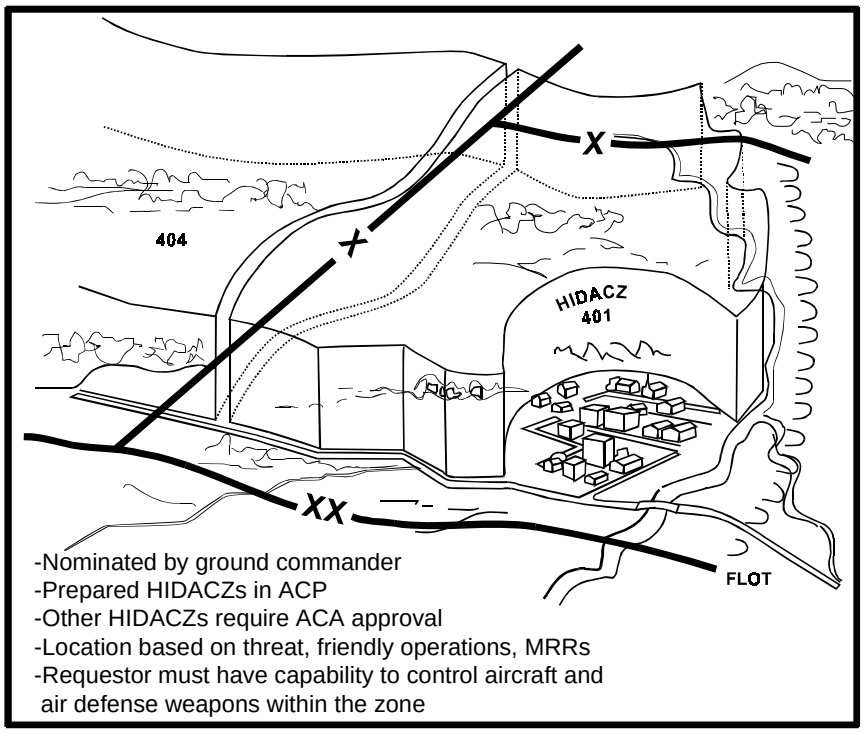

Figure F-1. High-Density Airspace Control Zone

(2) Uses. HIDACZ allows ground/Marine air-ground task force commanders to restrict a volume of airspace from users not involved with ongoing operations. It restricts use of the airspace because of the large volume and density of fires supporting the ground operations within the described geographic area.

(3) Considerations. The volume of air traffic demands careful coordination to limit the potential conflict among aircraft needed for mission essential operations within the HIDACZ and other airspace users. When establishing a HIDACZ, consider the following:

(a) Minimum risk routes (MRR) into and out of the HIDACZ and to the target area.

(b) Air traffic advisory as required. Procedures and systems also must be considered for air traffic control service during instrument meteorological conditions.

(4) Procedures for expeditious movement of aircraft into and out of the HIDACZ.

(a) Coordination of fire support, as well as air defense weapons control orders or status within and in the vicinity of the HIDACZ.

(b) Location of enemy forces inside of and within close proximity to the HIDACZ.

(5) POC. The ground commander nominates the HIDACZ, and the ACA approves it.

r. Joint Engagement Zone (JEZ).

(1) Description. A JEZ is airspace of specified dimensions within which multiple AD weapon systems (surface-to-air missiles and fighters) of one or more Service components are simultaneously employed and operated.

(2) Uses. From an airspace control perspective, JEZ provides airspace users with location of the joint engagement zone for mission-planning purposes.

(3) Considerations. JEZs are highly dependent on correct differentiation between friendly, neutral, and enemy aircraft. Procedures for effectively using a JEZ are under development.

(4) POC. AADC.

s. Low-Altitude Missile Engagement Zone (LOMEZ).

(1) Description. A LOMEZ is a volume of airspace established to control engagements of low- to medium-altitude surface-to-air missiles. Subject to weapon system capabilities, the LOMEZ normally extends beyond the forward edge of the battle area.

(2) Uses. From an airspace control perspective, LOMEZ provides airspace users with location of the engagement zone of low-altitude missile systems for mission planning purposes.

(3) Considerations. The design of the LOMEZ is contingent on specific weapon system capabilities.

(4) POC. AADC.

t. Low-Level Transit Route (LLTR).

(1) Description. A LLTR is a temporary bidirectional corridor of defined dimensions that facilitates the low-level passage of friendly aircraft through friendly air defenses and controlled or restricted airspace. LLTR currently is used only within the North Atlantic Treaty Organization (NATO). See Figure F-2.

(2) Uses. LLTR is normally used by high performance aircraft. LLTR is an airspace control measure in NATO.

(3) Considerations. LLTR is a procedural method. See NATO Regional Airspace Control Plans (MIKE-Plans).

(4) POC. ACA.

u. MRR.

(1) Description. An MRR is a temporary corridor of defined dimensions recommended for use by high-speed, fixed-wing aircraft that presents the minimum known hazards to low-flying aircraft transiting the combat zone. MRRs are established considering the threat, friendly operations, known restrictions, known fire support locations, and terrain. See Figure F-2.

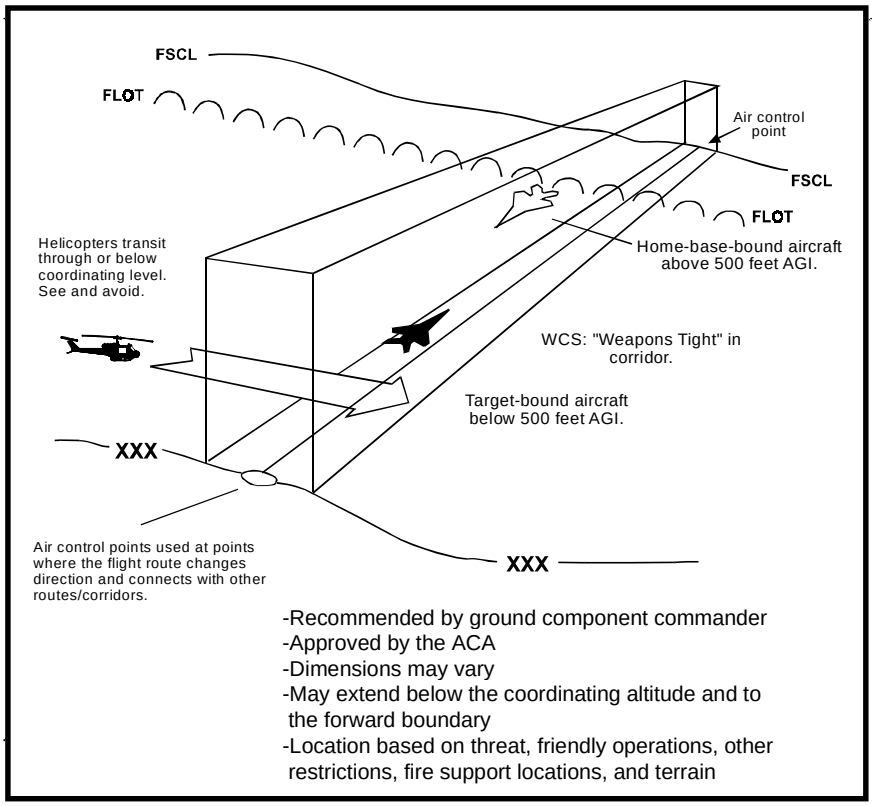

Figure F-2. Minimum Risk Routes/Low-Level Transit Routes

(2) Uses. MRR is an ACM used primarily by cross-FLOT operations. CAS aircraft do not usually use MRRs in the vicinity of the target area.

(3) Considerations. MRRs are established based on known threats.

(4) POC. ACA.

v. Positive Identification Radar Advisory Zone (PIRAZ).

(1) Description. A PIRAZ is a designated area within which Navy ships (usually equipped with naval tactical data systems) separate friendly from hostile aircraft.

(2) Uses. PIRAZ provides tracking, control, and assistance to friendly aircraft within the antiair warfare surveillance area of the battle group.

(3) POC. ADC.

w. Restricted Operations Area (ROA).

(1) Description. An ROA is airspace of defined dimensions created in response to specific operational situations or requirements within which the operation of one or more airspace users is restricted. Also known as a restricted operations zone (ROZ).

(2) Uses. An ROA is an airspace control measure used to separate and identify areas. For example, artillery, mortar, naval gunfire support, UAV operating areas, aerial refueling, concentrated interdiction areas, areas of search and rescue (SAR), SOF operating areas, and areas in which the AADC has declared "weapons free." Commonly used for drop zones, landing zones, assault landing zones, SAR areas, UAV launch and recovery sites, UAV mission areas, and special electronics mission aircraft.

(3) Considerations. ROA can adversely affect air defense operations; therefore, air defense missions generally have priority over ROAs.

(4) POC. ACA.

x. Return To Force (RTF).

(1) Description. RTFs are planned route profiles for use by friendly aircraft returning to an aircraft-capable ship.

(2) Uses. RTF provides a means for easily identifying friendly aircraft.

(3) POC. ADC.

y. SHORADEZ.

(1) Description. Areas of SHORAD deployment may fall within a LOMEZ or HIMEZ. It is possible that some areas may be solely defended by SHORAD assets. A SHORADEZ can be established to define the airspace within which these assets will operate. Because

centralized control over the SHORAD weapons may not be possible, these areas must be clearly defined and disseminated so friendly aircraft can avoid them.

(2) Uses. SHORADEZ is normally established for the local air defense of high-value assets. From an airspace control perspective, SHORADEZ provides airspace users with the location of the engagement zone of short-range air defense systems for mission planning purposes.

(3) Considerations. Centralized control of SHORADEZ may not be possible.

(4) POC. AADC.

z. Special Use Airspace.

(1) Description. Special use airspace defines airspace for a specific purpose. It may also designate airspace in which no flight activity is authorized. General subdivisions (regions, sectors, and AOAs) are not special use airspace.

(2) Uses. Special use airspace is typically applied to BDZs and cap/orbit areas.

(3) Considerations**.** Special use airspace typically is a peacetime term contained in FAAH 7610.4, *Special Military Operations*, to include military operating areas, air traffic control assigned airspace, and other airspace.

(4) POC. ACA.

aa. Standard Use Army Aircraft Flight Route (SAAFR)**.**

(1) Description. SAAFR are routes established below the coordinating altitude to facilitate the movement of Army aviation assets. SAAFRs are normally located in the corps through brigade rear areas of operation. See Figure F-3.

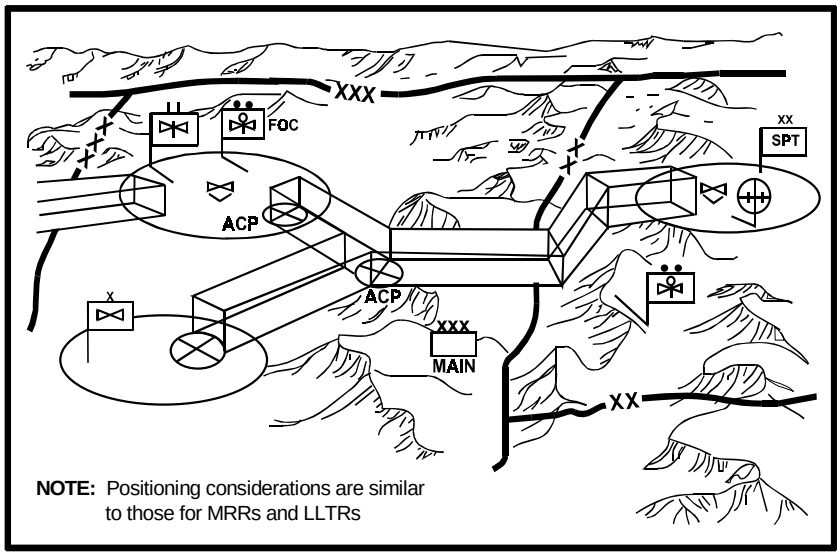

Figure F-3. Standard Use Army Aircraft Flight Routes

(2) Uses. SAAFR is an airspace control measure used by Army assets for administrative and logistic purposes.

(3) POC. If altitudes are at or below the coordinating altitude, SAAFR is implemented by the using authority. If a coordinating altitude has not been established, an air corridor is established by the ACA at the request of the appropriate ground commander. See FM 100-10 for additional information.

bb. Weapons Engagement Zone (WEZ).

(1) Description. In AD, WEZ is airspace of defined dimensions within which the responsibility for engagement normally rests with a particular weapon system. These include FEZ, HIMEZ, LOMEZ, SHORADEZ, and JEZ.

(2) Uses. WEZ defines air defense areas by weapon system. From an airspace control perspective, WEZ provides airspace users with location of the air defense engagement for mission planning purposes.

(3) Considerations. Design of the WEZ is dependent on specific weapon system capabilities.

(4) POC. AADC.

cc. Weapons Free Zone.

(1) Description. A weapons free zone is an AD zone established for the protection of key assets or facilities, other than air bases, where weapons systems may be fired at any target not positively recognized as friendly.

(2) Uses. A weapons free zone is an air defense control measure normally used for high-value asset defense and in areas with limited command and control authority. From an airspace control perspective, this zone provides airspace users with location of a weapons free area for mission planning purposes.

(3) POC. AADC declares weapons free with the ACA establishing the zone.

3. Integrating FSCMs and ACMs

FSCMs and ACMs are not complementary and in some cases may cause conflicts between airspace users and fire delivery systems. Army (Army airspace command and control elements, fire support elements, and tactical air control parties [TACPs]), Marine Corps (fire support coordination centers, TACPs, and direct air support center) and the joint airspace operations center should work together to ensure the appropriate ACMs are planned, requested, and approved to support the planned establishment of FSCMs. Since FSCMs may be established at numerous levels and ACMs are normally established at a single level, the agencies at all levels must be aware of the impact of FSCMs and ACMs on future ground and air operations. Three examples are described below.

a. Free Fire Area (FFA). If the surface commander wants to bypass an enemy force in strong fortifications, he may desire the establishment of a FFA to expedite fires. However, this action may also increase the amount of uncoordinated fires through the airspace in the vicinity of the FFA. The establishment of the ROZ in the airspace over the FFA may assist in airspace deconfliction.

b. No Fire Area (NFA). If the surface commander wishes to protect a vital industrial complex or religious site, he may designate the area a NFA. Fires would then be prohibited into the area. The establishment of a NFA does not increase danger to aircraft. The establishment of an ACM restricting aircraft from flying over the site ensures no damage will occur due to misidentification of a target or intentional provocation (fires from near the area) will result in air delivered weapons release.

c. High Density Airspace Control Zone. If a component will conduct extensive air operations within an area, a HIDACZ may be established. Depending on the nature of the operation, establishing a formal airspace control area may be advisable.

Appendix G

FIRE SUPPORT COORDINATING MEASURES

1. Fire Support Coordinating Measures (FSCMs)

Locations and implementing instructions for FSCMs are disseminated electronically by message, data base update, and/or overlay through both command and fire support channels to higher, lower, and adjacent maneuver and supporting units. Typically, they are further disseminated to each level of command, to include the establishing command and all concerned fire support agencies. Not all measures may apply to a joint operation. However, knowledge of the various FSCMs used by each Service is necessary for the effective use of fire support.

a. Planning and Coordination Considerations. Establishment or change of an FSCM established by the ground commander is typically initiated through the J-3, G-3, and/or S-3 operations cell and ultimately approved by the appropriate commander (See Joint Pub 3-09, Chapter III, "Planning and Coordination"). FSCMs enhance the expeditious attack of targets; protect forces, populations, critical infrastructure, and sites of religious or cultural significance; and set the stage for future operations. Commanders position and adjust FSCMs consistent with the operational situation and in consultation with superior, subordinate, supporting, and affected commanders. The operations cell informs coordination elements of the change and effective time. Conditions which dictate the change of FSCMs are also coordinated with the other agencies and components as appropriate. As conditions are met, the new FSCM effective time can be projected and announced. Following direction to execute the change, the operations cell should confirm with all liaison elements that the FSCM changes have been disseminated. This ensures that affected units are aware of new FSCM locations, associated positive control measures are being followed, and also reduces risk of fratricide.

b. STANAG 2099 and Quadripartite Standardization Agreement 531. Some FSCMs described here have not yet been agreed to by NATO and American, British, Canadian, and Australian allies. Before commencing operations both joint force and component staff members must verify the status of FSCMs in a multinational operation.

2. Permissive Measures

a. Coordinated Fire Line (CFL).

(1) Purpose. The CFL is a line beyond which conventional surface fire support means (both direct and indirect systems) may fire at any time within the boundaries of the establishing headquarters without additional coordination. The purpose of the CFL is to expedite the surface-to-surface attack of targets beyond the CFL without coordination with the ground commander in whose area of operation the targets are located.

(2) Establishment. The CFL is usually established by a brigade or division commander equivalent, but it can also be established, especially in amphibious operations, by a maneuver battalion. It is located as close to the establishing unit as possible without

interfering with the maneuver forces. There is no requirement for the CFL to be placed on identifiable terrain. However, additional considerations include the limits of ground observation, the location of the initial objectives in the offense, and the requirement for maximum flexibility in both maneuver and the delivery of supporting fires. Higher headquarters may consolidate CFLs.

(3) Graphic Portrayal. The CFL is graphically portrayed by a dashed black line, with "CFL" followed by the establishing headquarters above the line and the effective date-time group (DTG) below the line. See Figure G-1.

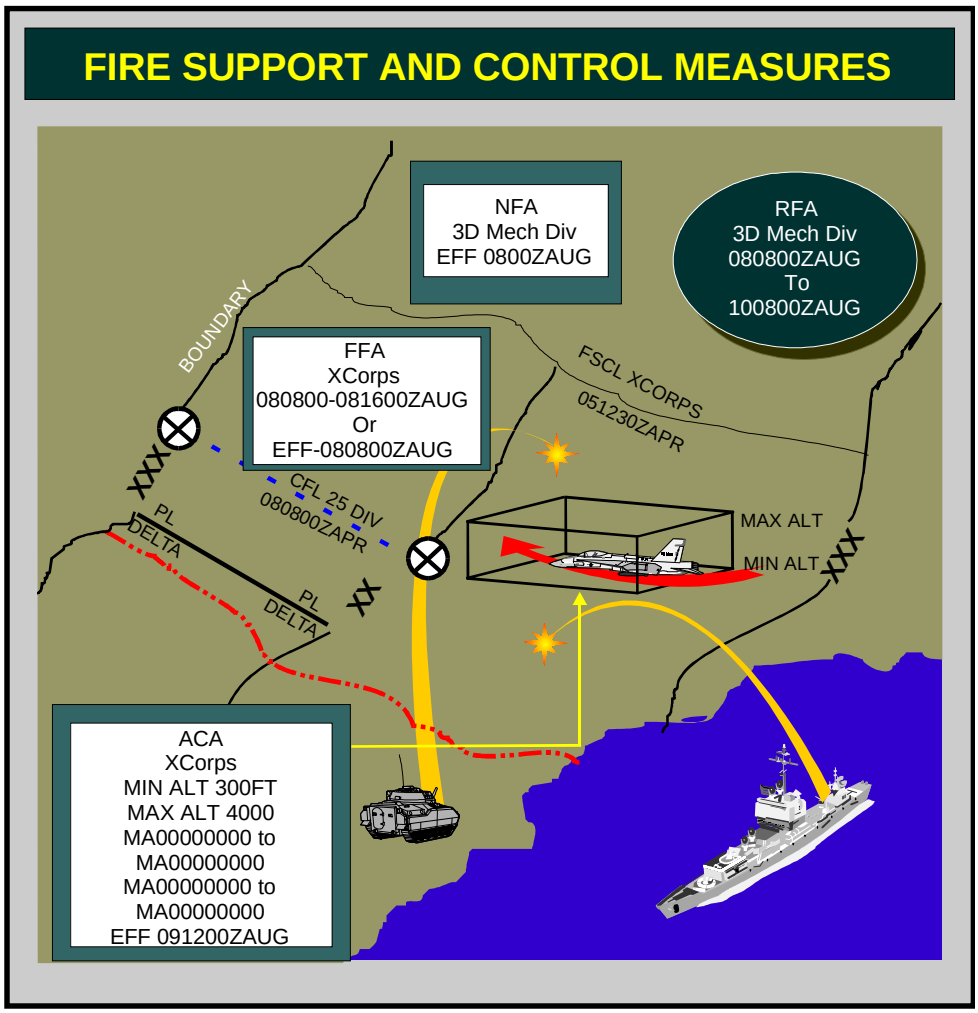

Figure G-1. Fire support and Control Measures

b. Fire Support Coordination Line (FSCL).

(1) Purpose. FSCLs facilitate the expeditious attack of targets of opportunity beyond the coordinating measure. An FSCL does not divide an AO. The FSCL applies to all fires of air-, land-, and sea-based weapon systems using any type of ammunition against surface targets. See Figure G-2.

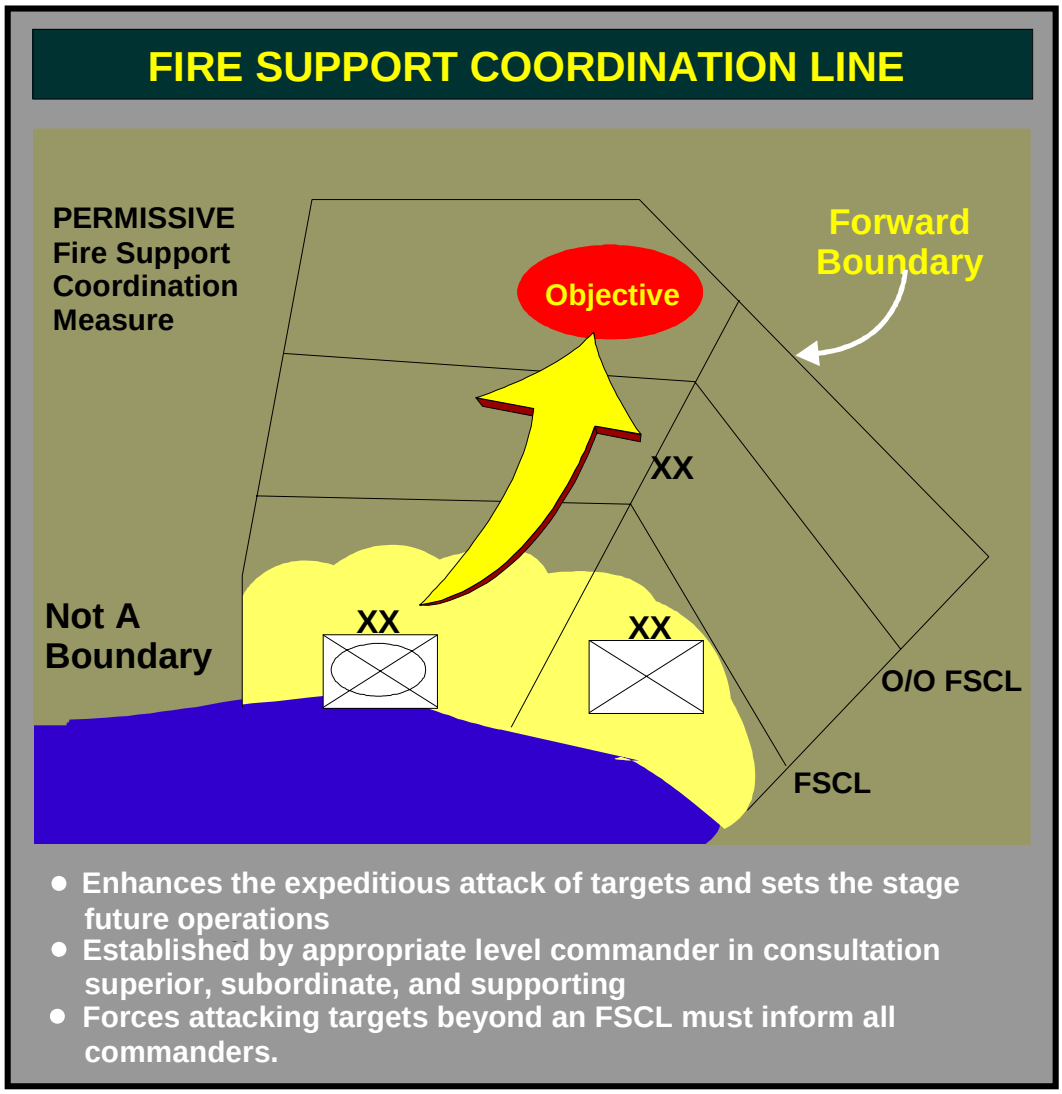

Figure G-2. Fire Support Coordination Line

(2) Establishment. An FSCL is established and adjusted by appropriate land or amphibious force commanders within their boundaries in consultation with superior, subordinate, supporting, and affected commanders. The FSCL is a term oriented to air-land operations; no similar term is used at sea. If possible, the FSCL should follow well-defined terrain features to assist identification from the air. In amphibious operations the FSCL is normally established by the CLF after coordination with the CATF. Changes to the FSCL require notification of all affected forces within the AO and must allow sufficient time for these forces and/or components to incorporate the FSCL change. Generally 6 hours is adequate in order to coordinate an FSCL change. Whenever possible, restrictive measures are employed by commanders to enhance the protection of friendly forces operating beyond the FSCL—measures such as restrictive fire areas (RFAs) and no-fire areas (NFAs).

(3) Graphic Portrayal. The FSCL is graphically portrayed by a solid black line extending across the assigned areas of the establishing headquarters. The letters "FSCL" are followed by the establishing headquarters above the line and the effective DTG below

the line. FSCLs do not have to follow “traditional” straight-line paths. Curved and/or enclosed FSCLs have applications in nonlinear joint operations. See Figure G-2.

(4) Employment. Use of an FSCL is not mandatory. Forces attacking targets beyond an FSCL must inform all affected commanders in sufficient time to allow necessary reaction to avoid fratricide, both in the air and on the ground. In exceptional circumstances, the inability to conduct this coordination will not preclude the attack of targets beyond the FSCL. However, failure to do so may increase the risk of fratricide and waste limited resources. Short of an FSCL, all air-to-ground and surface-to-surface attack operations are controlled by the appropriate land or amphibious force commander. This control is exercised through the operations staff or with predesignated procedures. The FSCL is not a boundary. The synchronization of operations on either side of the FSCL is the responsibility of the establishing commander out to the limits of the land or amphibious force boundary. The establishment of an FSCL does not create a “free-fire area” beyond the FSCL. When targets are attacked beyond an FSCL, supporting element’s attacks must not produce adverse effects on or to the rear of the line. Attacks beyond the FSCL must be consistent with the establishing commander’s priorities, timing, and desired effects and deconflicted whenever possible with the supported headquarters.

(5) Considerations. The decision on where to place or even whether to use an FSCL requires careful consideration. If used, its location is based on estimates of the situation and concept of operations. The commander considers location of enemy forces, anticipated rates of movement, concept and tempo of the operation, organic weapon capabilities, and other factors. The FSCL is normally positioned closer to the forward line of own troops in the defense than in the offense; however, the exact positioning depends on the situation. Placing the FSCL at greater depths typically requires support from higher organic headquarters and other supporting commanders.

(a) Air strikes short of the FSCL (both CAS and air interdiction [AI]) must be under positive or procedural control to ensure proper clearance of fires (e.g., forward air controllers, TACPs). Ground commanders must consider the need for extra control measures. Also, when the FSCL is positioned at greater depth, there is greater requirement for detailed coordination with the establishing commander.

(b) By establishing an FSCL close in yet at sufficient depth so as to not limit high-tempo maneuver, land or amphibious force commanders ease the coordination requirements for attack operations within their AOs by forces not under their control, such as naval surface fire support (NSFS) or AI.

(c) Coordination of attacks beyond the FSCL is especially critical to commanders of air, land, and SOF units operating beyond the FSCL. Such coordination is also important when attacking forces are employing wide-area munitions or those with delayed effects. Finally, this coordination assists in avoiding conflicting or redundant attack operations.

(d) The establishing commander adjusts the location of the FSCL as required to keep pace with operations. In high-tempo maneuver operations, the FSCL may change frequently. A series of pre-disseminated on-order FSCLs will help accelerate the coordination required. The establishing commander quickly transmits the change to higher, lower, adjacent, and supporting headquarters to ensure attack operations are appropriately

coordinated by controlling agencies. Anticipated adjustments to the location of the FSCL are normally transmitted to other elements of the joint force sufficiently early to reduce potential disruptions in their current and near-term operations. Careful planning and coordination is essential for changes to the FSCL. This planning is necessary to minimize the risk of fratricide and avoid disrupting operations.

(e) Varying capabilities for acquisition and attack may exist among adjacent commanders in a multi-corps environment or multinational operation. Normally, corps level commanders may establish an FSCL to support their operations. Layered FSCLs and multiple, separate, non-contiguous corps and/or MEF FSCLs positioned at varying depths create a coordination and execution challenge for supporting commanders; e.g., tracking effective times, lateral boundaries, and multiple command guidance. In cases such as these when the components share a mutual boundary, the JFC or JFLCC may consolidate the theater and/or JOA operational requirements of subordinates to establish a single FSCL. This FSCL may be noncontiguous, to reflect the varying capabilities of subordinate commands. A single FSCL facilitates air support, accommodates subordinate deep operations requirements, and eases coordination of FSCL changes.

c. Free-Fire Area (FFA).

(1) Purpose. An FFA is a specific designated area into which any weapon system may fire without additional coordination with the establishing headquarters. It is used to expedite fires and to facilitate emergency jettison of aircraft munitions.

(2) Establishment. An FFA may be established only by the military commander with jurisdiction over the area (usually, a division or higher commander). Preferably, the FFA should be located on identifiable terrain; however it may be designated by grid coordinates.

(3) Graphic Portrayal. The FFA is graphically portrayed by a solid black line defining the area and the letters “FFA” within, followed by the establishing headquarters and the effective DTG. See Figure G-1.

3. Restrictive Measures

a. Restrictive Fire Line (RFL).

(1) Purpose. The RFL is a line established between converging friendly forces—one or both may be moving—that prohibits fires or the effects of fires across the line without coordination with the affected force. The purpose of the line is to prevent fratricide and duplication of attacks by converging friendly forces.

(2) Establishment. The commander common to the converging forces establishes the RFL. It is located on identifiable terrain when possible. In link-up operations, it is usually closer to the stationary force to allow maximum freedom of action for the maneuver and fire support of the linkup force.

(3) Graphic Portrayal. The RFL is graphically portrayed by a solid black line, with “RFL” followed by the establishing headquarters above the line and the effective DTG below the line. See Figure G-3.

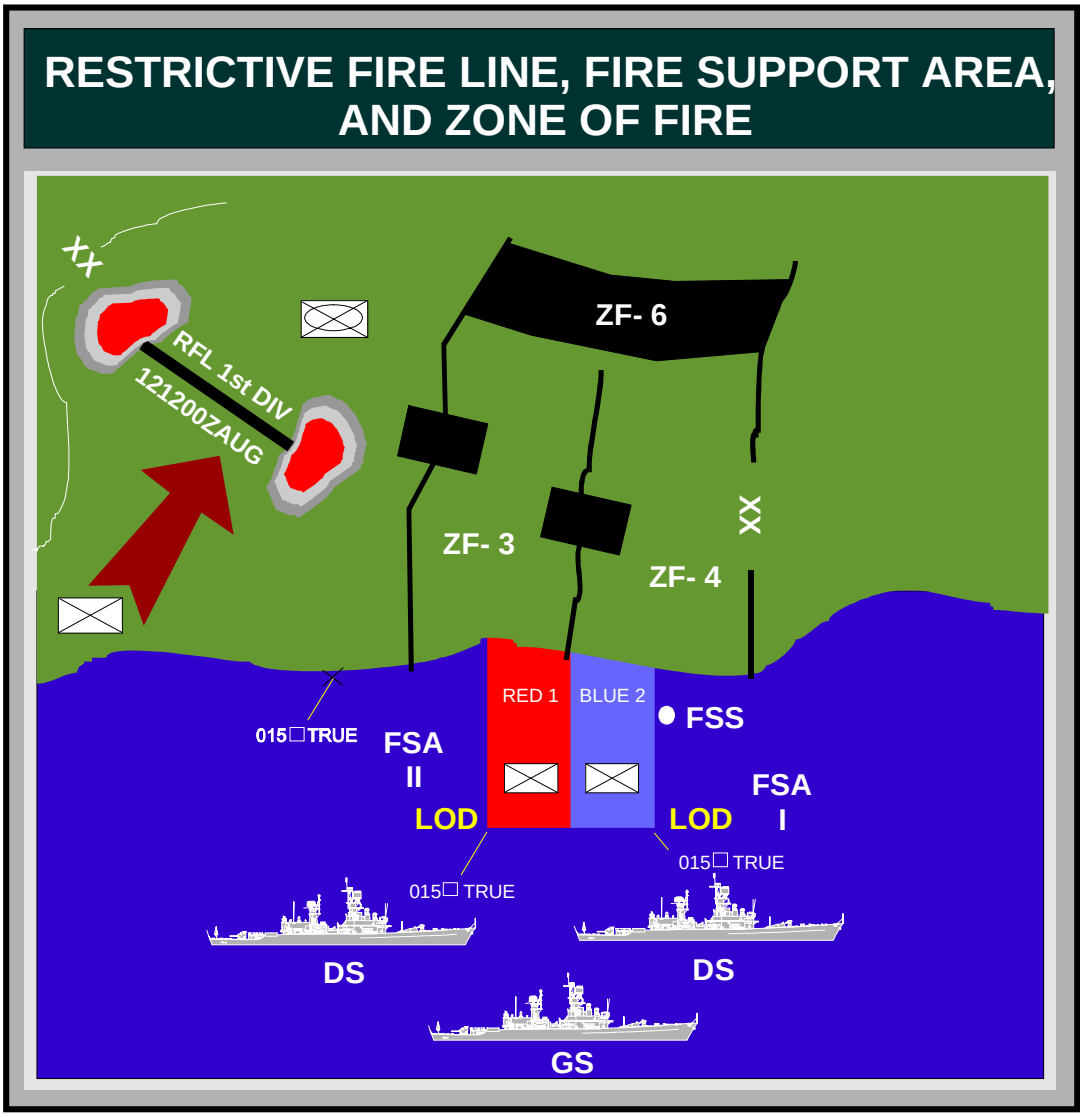

Fig G-3. Restrictive Fire Line, Fire Support Area, and Zone of Fire

b. No-Fire Area (NFA).

(1) Purpose**.** The purpose of the NFA is to prohibit fires or their effects into an area. There are two exceptions:

(a) When the establishing headquarters approves fires within the NFA on a mission-by-mission basis.

(b) When an enemy force within the NFA engages a friendly force and the engaged commander determines there is a requirement for immediate protection and responds with the minimal force needed to defend his force.

(2) Establishment. Usually, a division or corps equivalent establishes an NFA. If possible, the NFA is established on identifiable terrain. It may also be located by grid or by a radius from a center point.

(3) Graphic Portrayal. The NFA is graphically portrayed as an area outlined with a solid black line with black diagonal lines inside. The letters "NFA" are within, followed by the establishing headquarters and the effective DTG. See Figure G-1.

c. Airspace Coordination Area. The airspace coordination area is the primary FSCM which reflects the coordination of airspace for use by air support and indirect fires.

(1) Purpose. Airspace coordination areas are used to ensure aircrew safety and the effective use of indirect supporting surface fires by deconfliction through time and space. The airspace coordination area is a block or corridor of airspace in which friendly aircraft are reasonably safe from friendly surface fires. A formal airspace coordination area (a three-dimensional box of airspace) requires detailed planning. More often an informal airspace coordination area is established using time, lateral separation, or altitude to provide separation between surface-to-surface and air-delivered weapon effects. For additional information on the airspace coordination area, see Joint Pub 3-09.3, *Joint Tactics, Techniques, and Procedures for Close Air Support (CAS)*, and Joint Pub 3-52, *Doctrine for Joint Airspace Control in the Combat Zone*.

(2) Establishment. The airspace control authority establishes formal airspace coordination areas at the request of the appropriate ground commander. Airspace coordination areas require detailed planning. Though not always necessary, formal airspace coordination areas could be considered. Vital information defining the formal airspace coordination area includes minimum and maximum altitudes, a baseline designated by grid coordinates at each end, the width (on either side of the baseline), and the effective times. When time for coordination is limited, an informal airspace coordination area is used. In an informal airspace coordination area, aircraft and surface fires may be separated by time or distance (lateral, altitude, or a combination of the two). The informal airspace coordination area can be requested by the maneuver commander requesting CAS or employing helicopters and is approved at battalion or higher level. Both types of airspace coordination areas are constructed with the assistance of the air liaison officer to ensure they meet the technical requirements of the aircraft and weapon systems.

(3) Graphic Portrayal. A formal airspace coordination area is shown as an area enclosed by a solid black line. Depicted inside the enclosed area are "airspace coordination area," the establishing headquarters, the minimum and maximum altitudes, the grid coordinates for each end of the baseline, and the effective DTG or the words "on order." Informal airspace coordination areas are not normally displayed on maps, charts, or overlays. See Figure G-1.

d. Restrictive Fire Area (RFA).

(1) Purpose. An RFA is an area where specific restrictions are imposed and in which fires (or the effects of fires) that exceed those restrictions will not be delivered without coordination with the establishing headquarters. The purpose of the RFA is to regulate fires into an area according to the stated restrictions.

(2) Establishment. A maneuver battalion or higher echelon normally establishes an RFA. Usually, the RFA is located on identifiable terrain, by grid, or by a radius from a

center point. To facilitate rapidly changing operations, on-call RFAs may be used. The dimensions, locations, and restrictions of the on-call RFA are prearranged.

(3) Graphic Portrayal. The RFA is graphically portrayed by a solid black line defining the area and the letters "RFA" within, followed by the establishing headquarters and the effective DTG. The restrictions may be included within the graphic if space allows, or reference may be made to a specific OPORD or OPLAN. See Figure G-1.

e. Zone of Fire.

(1) Purpose. A zone of fire is an FSCM usually used during amphibious operations and includes the area within which a designated ground unit or fire support ship delivers, or is prepared to deliver, fire support. Fire may or may not be observed. Land is divided into zones of fire which are assigned to gunfire support ships and units as a means to coordinate their efforts with each other and with the scheme of maneuver of the supported ground unit. Units and ships assigned zones of fires are responsible for attacking known targets and targets of opportunity according to their mission and the guidance of the supported commander.

(2) Establishment. The commander of the naval task force providing NSFS establishes and assigns zones of fire for the forces. The zone of fire for an artillery battalion or a ship assigned the mission of direct support (DS) normally corresponds to the AO of the supported unit. The zone of fire for an artillery battalion or a ship assigned the mission of general support (GS) should be within the boundaries of the supported unit. When used in conjunction with naval gunfire, the size and shape of a zone of fire will depend on the following:

(a) Boundaries. In order to permit ready identification by the spotter and the individual fire support ship, the boundaries of the zones of fire should be recognizable both on the terrain and on a map. It may be necessary to divide a large zone of fire into two or more smaller zones due to considerations discussed below. The boundaries of zones of fire of DS ships should correspond to the zones of action of the landing force units supported.

(b) Size. The size of each zone should be such that the fire support ships, or ships assigned to observe and/or destroy targets, will be able to accomplish the mission in the time allocated. When zones of fire are delineated, known or suspected targets scheduled for destruction in each zone are plotted, and then the number and type of targets are compared to the capability of the ship.

(c) Visibility. Observation from seaward is a desirable feature for zones of fire, since it permits a ship to deliver more accurate and rapid fire.

(d) Accessibility to Fire. The zones of fire must be accessible to the trajectory of the fire support ship(s) assigned to the zone.

(3) Graphic Portrayal. Zones of fire are delineated by the use of broken lines (solid lines if unit boundaries are used) and are designated by Arabic numerals, e.g., "ZF3". See Figure G-3.

4. Maneuver Control Measures

a. Boundaries.

(1) Purpose. A boundary is a maneuver control measure. In land warfare, it is a line by which surface AOs between adjacent units and/or formations are defined. Boundaries designate the geographical limits of the AO of a unit. Within their own boundaries, units may execute fire and maneuver without close coordination with neighboring units unless otherwise restricted. **Normally units do not fire across boundaries unless the fires are coordinated with the adjacent unit or the fires are beyond a FSCM, such as a CFL.** These restrictions apply to conventional and special munitions and their effects. When fires such as smoke and illumination affect an adjacent unit, coordination with that unit is normally required. A commander can, in certain situations, decide to fire across boundaries at positively identified enemy elements without coordination. However, direct and observed fires should be used when firing across boundaries at positively identified enemy forces when there is no time to coordinate with adjacent friendly units.

(2) Establishment and/or Portrayal. Any commander given an AO can establish boundaries for subordinate units. These boundaries will be respected by all Service and functional components. Boundaries are depicted as solid black lines with a symbol placed on the boundary to show the size and designation of the highest echelons that have the boundary in common. If the units are of unequal size, the symbol of the higher unit is shown and the designation of the lower unit is given completely. See Figure G-1.

b. Phase Lines (PL).

(1) Purpose. A PL is a maneuver control measure used by land forces for control and coordination of military operations. It is usually a recognizable terrain feature extending across the zone of action. Units normally report crossing PLs, but do not halt unless specifically directed. PLs can be used to identify limits of advance, control fires or define an AO. The purpose of each PL and any actions required by forces affected by the PL will be specified on the operation order of the establishing headquarters.

(2) Establishment and/or Portrayal. Any commander given an AO can establish PLs. A PL is depicted as a solid black line labeled “PL” and assigned letters, numbers, or code name designations. See Figure G-1.

c. Fire Support Area (FSA) and/or Fire Support Station (FSS).

(1) Purpose. A FSA is an appropriate maneuver area assigned to fire support ships by the naval force commander from which they deliver NSFS to an operation ashore. An FSA is normally associated with amphibious operations but can be used whenever it is desirable to have a fire support ship occupy a certain geographic position. A FSS is a specific location at sea within an FSA from which a fire support ship delivers fire. This designation is used to station ships within boat lanes of the assaulting force, or in areas where maneuvering room is restricted by other considerations.

(2) Establishment. The officer in tactical command, typically the CATF, establishes FSAs and FSSs. In amphibious operations when attack groups are formed and separate landing areas are designated, the CATF may assign each attack group commander the responsibility for control of naval gunfire support within the area.

(3) Graphic Portrayal. FSAs are designed with Roman numerals (FSA I, II, III) and are shown on the naval gunfire support operations overlay. FSSs are designated by Arabic numerals (FSS 1, 2, 3) and are shown on the NSFS operations overlay as a black dot indicating the exact position of the ship. See Figure G-3.

5. Airspace Control Measures

a. Airspace Control Measures (ACMs). ACMs are nominated from subordinate headquarters through component command headquarters, and forwarded to the airspace control authority (ACA) in accordance with the air control plan (ACP). Most ACMs impact on indirect fires trajectories and unmanned reconnaissance aircraft because of their airspace use. Some ACMs may be established to permit surface fires or UAV operations. The component commanders ensure that ACM nominations support and do not conflict with ground operations prior to forwarding to the JAOC. The airspace control authority approves formal ACM nominations and includes them in the airspace control order (ACO). The ACA consolidates, coordinates, and deconflicts the airspace requirements of the components and publishes the ACMs in the ACO. The ACO is normally published at least daily and is often distributed both separately and as a section of the air tasking order (ATO). See Joint Pub 3-52, *Doctrine for Joint Airspace Control in the Combat Zone*, and Joint Pub 3-56.1, *Command and Control for Joint Air Operations*, for further information on C2 of air operations.

b. Normally, ACMs such as low-level transit routes will terminate in the vicinity of the FSCL. However, the situation may require establishing active and planned ACMs beyond the FSCL to facilitate rapid change of both the FSCL and ACM. ACMs may be established to facilitate operations between the FSCL and the land force commander's forward boundary. Ground infiltration and aerial insertion and/or extraction of SOF or long-range surveillance teams as well as attack helicopter maneuver are operational examples.

c. Changes to ACMs within a land force AO are initiated by the component's air control element with ACA approval. One common procedural ACM that impacts on the delivery of fire support is a coordinating altitude. A coordinating altitude separates fixed- and rotary-wing aircraft. The JFC approves the coordinating altitude, which is normally specified in the ACP. The ACA is the final approving authority for changes, which are requested through airspace coordination channels. Fixed- or rotary-wing aircraft planning extended operations penetrating this altitude should, whenever possible, notify the appropriate airspace control facility; however, approval acknowledgment is not required.

Appendix H
THE BULLSEYE REFERENCE SYSTEM

1. Background

The Bullseye Reference System can be used to provide components with a common perspective of the battlespace and allow for common identification of mutually accessible attack areas. In addition, it can be used to identify the center point for the establishment of an appropriate FSCM/ACM. The Bullseye Reference System is normally used during counterair engagements for situational awareness on targeted and untargeted airborne threats. However, it has application in attacks against surface time-critical targets (TCTs) and is commonly used by all theater aircraft as a means of relaying position and threat identification. The bullseye concept is similar to the US Army Terrain Index Reference System as well as the target reference point concept, that are used to quickly identify a target off of a known geographic point.

2. Bullseye Design

Bullseyes may be established throughout the JOA/AOR by selecting geographic points of reference and encoding them with code words or alphanumerics. If multiple bullseyes are required, each bullseye can be labeled with a specific code word. For example, three bullseyes can be designated as Bullseyes *Alpha, Bravo,* and *Charlie.* See Figure H-1. These geographic points should be incorporated into operational graphics and overlays of component C2 systems, such as AFATDS, TAPS, AETACS databases, and the ACP.

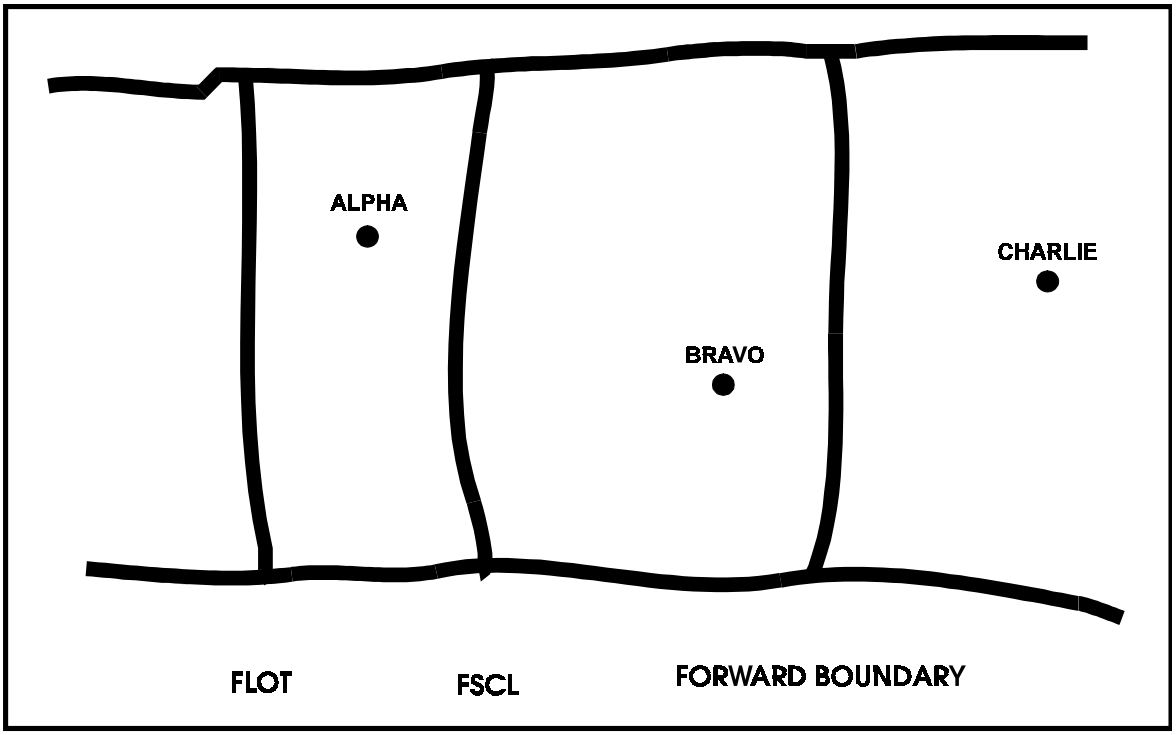

Figure H-1. Bullseye Reference System

3. Bullseye Development

Any component can develop bullseyes. To be effective during cross-component coordination and deconfliction, these bullseyes must be communicated to other components, preferably in advance of combat operations.

4. Bullseye Execution

Any surface TCT or attack can be referenced by its bearing and distance from a selected bullseye. Bearings should be described reference magnetic north and distance in nautical miles. Selected targets or attacks can then be rapidly coordinated and deconflicted using the bullseye as a common reference.

5. Bullseye Errors

The utility of a bullseye system is greatly hampered when targets are identified a significant distance from the specified bullseye point. As distance from the point increases, the larger the surface area per degree occurs, and consequently, the higher probability of error. The formula for error is as follows*: one degree of azimuth error = one NM of horizontal distance error at a range of 60 NM ("60 to 1" rule).* Therefore, a one degree of azimuth error at a range of 12 NM from a selected bullseye is equivalent to an 0.2 NM location error. However, a one-degree of azimuth error at a range of 120 NM from a selected bullseye results in a significantly greater location error. In this case, it equates to 2 NM. Essentially, the potential for error increases in direct proportion to any increase in range. If the range increases by a factor of 10, any degree of azimuth error will likewise increase the location error by a factor of 10. Therefore, it is best to use the bullseye technique in smaller areas, AOs, AOAs.

6. Bullseye Examples

The following are examples of component descriptions of surface TCT targets while using a Bullseye Reference System. Provided that each component understands the common bullseye reference points, coordination and deconfliction can occur. However, this process is much more fluid and inexact than the grid box procedure.

a. Example 1. A surface TCT located 20 NM south of Bullseye A*lpha* should be referred to as *Target, Bullseye Alpha, 180 degrees for 20 NM*. See Figure H-2. Fighter aircraft are then assigned to search for and attack the surface TCT. Appropriate FSCMs and/or ACMs can be established as in the grid box procedure.

b. Example 2. ATACMS attacks intended for a target northwest of Bullseye *Charlie* should be coordinated and deconflicted with other components by communicating *ATACMS attack, Bullseye Charlie, 335 degrees for 55 NM*. See Figure H-3. (Note: Actual targeting data [that is, specific target coordinates] is much more detailed. This information does not have to be transmitted for area deconfliction.) Similarly, ATACMS PAH, route of flight, and TAH can be cleared via the BCD and the JAOC. Appropriate FSCMs and/or ACMs can be established as before (RFAs and ROZs).

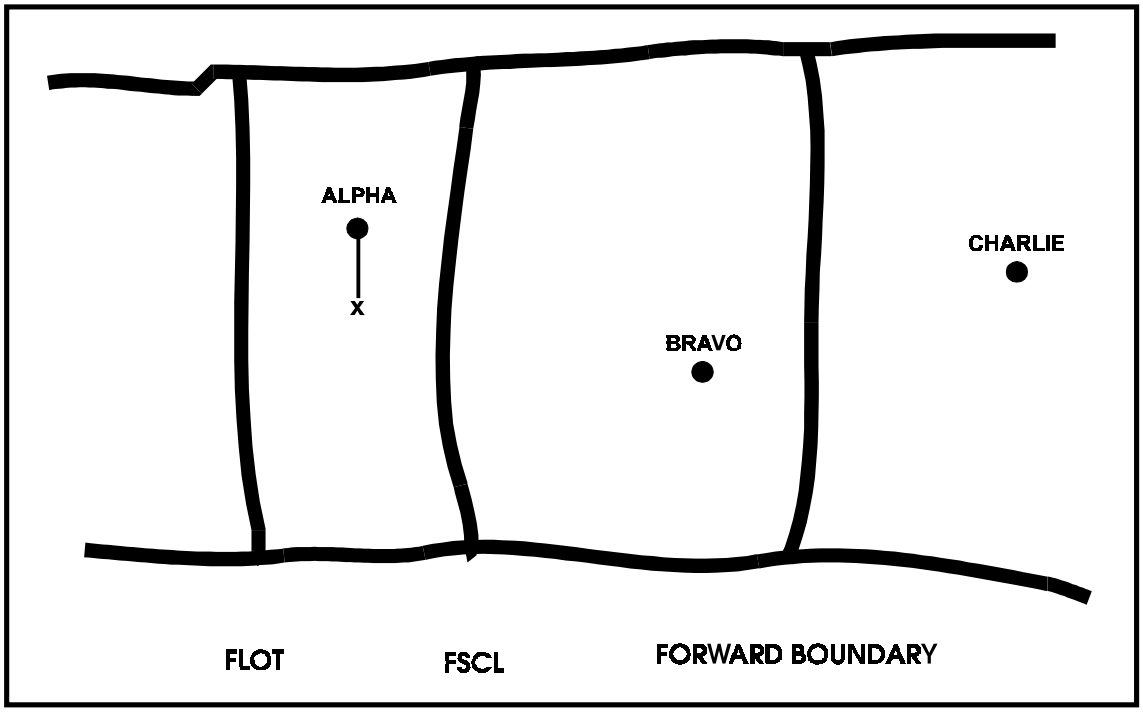

Figure H-2. Bullseye Example One

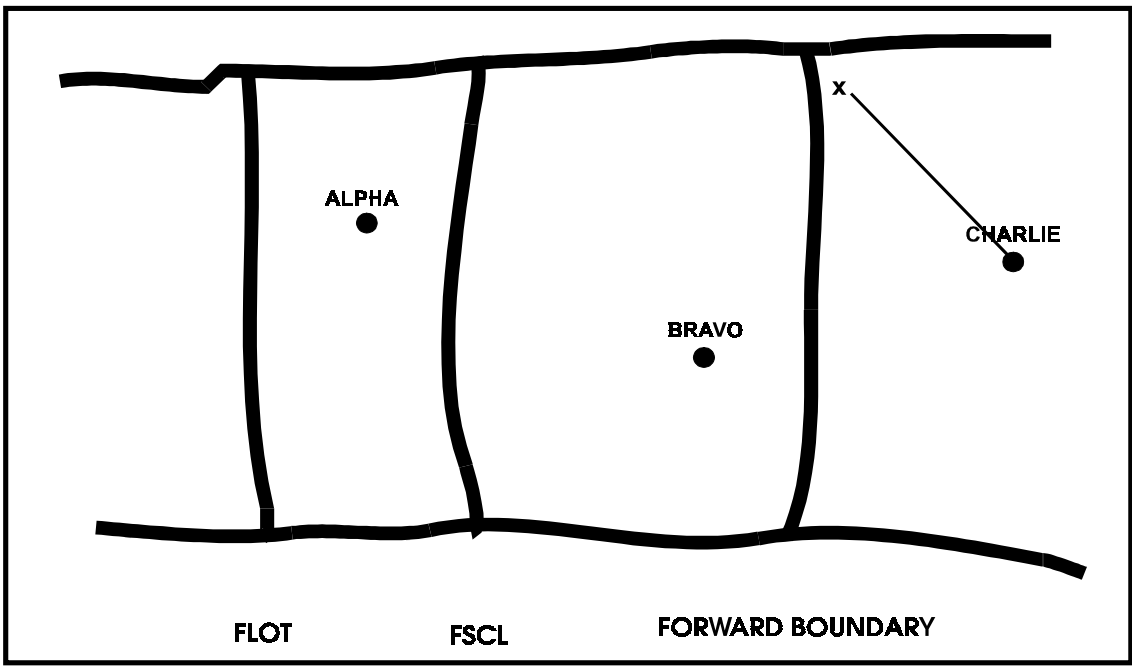

Figure H-3. Bullseye Example Two

c. Example 3. In extreme cases, bullseye calls can be transmitted on GUARD frequencies (UHF 243.0 and VHF 122.5) to warn aircraft of impending ATACMS, CALCM, or TLAM attacks in their area. This should only be used as a last resort when prior coordination and deconfliction could not have been accomplished.

REFERENCES

Joint

CJCSM 6120.01A, *Joint Multi-Tactical Digital Information Link (TADIL) Operating Procedures*
JP 1-02, *DOD Dictionary of Military and Associated Terms*
JP 3-0, *Doctrine for Joint Operations*
JP 3-02, *Joint Doctrine for Amphibious Operations*
JP 3-07, *Joint Doctrine for Military Operations Other Than War*
JP 3-09, *Doctrine for Joint Fire Support*
JP 3-52, *Doctrine for Joint Airspace Control in a Combat Zone*
JP 3-55.1, *Joint Tactics, Techniques and Procedures for Unmanned Aerial Vehicles*
JP 3-56.1, *Command and Control for Joint Air Operations*

Multiservice

Multiservice Procedures for the Theater Air Ground System (TAGS)
Muliservice Procedures for Joint Air Traffic Control (JATC)
Targeting: The Joint Targeting Process and Procedures for targeting Time-Critical Targets

Army

FM 1-100, *Army Aviation Operations*
FM 44-1-2, *Air Defense Artillery Reference Handbook*

Marine Corps

MCWP 3-25, *Control of Aircraft and Missiles*
MCWP 3-25.4, *Marine TACC Handbook*
MCWP 3-25.7, *Marine TAOC Handbook*
MCWP 3-25.9, *Marine Air Command and Control System Communications Handbook*

Navy

NWP 3-03.1, *Tomahawk Land Attack Missile Employment Manual*
TACMEMO TD0000-12-97, *Air Control Procedures and tactics for CV/ARG Integrated Battle Group*

Air Force

AFPD 13-1, *Theater Air Control System*
AFPD 13-2, *Air Traffic Control, Airspace, Airfield and Range Management*
AFI 13-106, *Air Support Operations Centers and Tactical Air control Parties*
AFI 13-201, *Air Force Airspace Management*

Glossary

PART I—ABBREVIATIONS AND ACRONYMS

A

A2C2	Army airspace command and control
AADC	area air defense commander
AAGS	Army air-ground system
AAMDC	Army Air and Missile Defense Command
AAW	antiair warfare
ABCCC	airborne battlefield command and control center
ACA	airspace control authority
ACE	aviation combat element (MAGTF)
ACM	airspace control measure
ACMREQ	airspace control means request
ACO	airspace control order
ACP	airspace control plan
AD	air defense
ADA	air defense artillery (USA)
ADC	air defense commander
ADIZ	air defense identification zone
ADP	air defense plan
ADS	air defense section
AETACS	airborne elements of the Theater Air Control System
AFATDS	Advanced Field Artillery Tactical Data System
AFDC	Air Force Doctrine Center
AFSOC	Air Force special operations component
AFSOF	Air Force special operations forces
AGL	above ground level
AI	air interdiction
AIC	airspace information center
AIRSUPREQ	air support request
ALO	air liaison officer
ALSA	Air Land Sea Application Center
AM	amplitude modulation
AMD	Air Mobility Division
AO	area of operations
AOA	amphibious objective area
AOC	air operations center (USAF)
AOCC	air operations control center
AOR	area of responsibility
APG	air procedures guide
APS	Afloat Planning System
AREC	air resource element coordinator (USN)
ARG	amphibious ready group
ARSOF	Army special operations forces
ASC	air support coordinator
ASC(A)	assault support coordinator (airborne)

ASCS	air support control section
ASE	air support element
ASOC	air support operations center
ATACMS	Army Tactical Missile System
ATACS	amphibious tactical air control system
ATC	air traffic control
ATCS	air traffic control section
ATF	amphibious task force
ATO	air tasking order
ATS	air traffic services
AWACS	Airborne Warning and Control System

B

BCD	battlefield coordination detachment
BDA	battle damage assessment
BDZ	base defense zone
BG	battle group

C

C2	command and control
C2W	command and control warfare
C2WC	command and control warfare commander
C3	command, control, and communications
C4I	command, control, communications, computers, and intelligence
CA	coordinating altitude
CAG	carrier air wing commander
CAIC	corps airspace information center
CALCM	conventional air-launched cruise missile
CAS	close air support
CATF	commander, amphibious task force
CE	command element
CFL	coordinated fire line
CIC	combat information center
CINC	commander in chief; commander of a combatant command
CLF	commander, landing force
COD	combat operations division
COE	common operating environment
COMAFFOR	Commander, Air Force Forces
COMARFOR	Commander, Army Forces
COMNAVFOR	Commander, Naval Forces
CONUS	continental United States
CP	command post
CPD	combat plans division
CRC	control and reporting center
CRE	control and reporting element
CS	combat support
CSAR	combat search and rescue

CSS	combat service support
CSSE	combat service support element
CTAPS	contingency theater automated planning system
CV	aircraft carrier; carrier
CVBG	aircraft carrier battle group; carrier battle group
CVN	aircraft carrier (nuclear propulsion)
CWC	composite warfare commander
CXF	commander, numbered fleet

D

DAIC	Division Airspace Information Center
DAS	deep air support (USMC)
DASC	direct air support center (USMC)
DASC(A)	direct air support center (airborne)
DATCALS	deployable air traffic control and landing system
DESRON	destroyer squadron
DII	defense information infrastructure
DOCC	deep operations coordination cell
DS	direct support
DTD	data transport devices
DTG	date-time group
DZ	drop zone

E

E2C	Navy Airborne Warning and Control System
EAC	echelons above corps
ENCOM	emission control
ETPP	electronic Tomahawk planning package

F

FA	field artillery
FAC	forward air controller
FAC(A)	forward air controller (airborne)
FADC	force air defense commander
FARP	forward arming and refueling point
FEZ	fighter engagement zone
FFA	free-fire area
FLOT	forward line of own troops
FLTSATCOM	fleet satellite communications
FM	frequency modulation; field manual
FOB	forward operations base
FSA	fire support area
FSCC	fire support coordination center
FSCL	fire support coordination line
FSCM	fire support coordinating measure
FSCOORD	fire support coordinator

FSE	fire support element
FSO	fire support officer
FSS	fire support station

G

G-3	Army or Marine Corps component operations staff officer; Army division or higher staff, Marine brigade or higher staff
GCE	ground combat element
GS	general support
GTACS	Ground Theater Air Control System

H

HC	helicopter coordinator
HCS	helicopter coordination section
HDC	helicopter direction center
HEC	helicopter employment coordinator
HF	high frequency
HIDACZ	high-density airspace control zone
HIMEZ	high-altitude missile engagement zone
HN	host nation
HQ	headquarters
HST	helicopter support team

I

IADS	integrated air defense system
ICAC2	integrated combat airspace command and control
ICAO	International Civil Aviation Organization
IFF	identification, friend or foe
IFR	instrument flight rules
ISR	intelligence, surveillance, reconnaissance

J

J-3	operations directorate of a joint staff
JAOC	joint air operations center
JASC	Joint Actions Steering Committee
JCS	Joint Chiefs of Staff
JEZ	joint engagement zone
JFACC	joint force air component commander
JFC	joint force commander
JFLCC	joint force land component commander
JFMCC	joint force maritime component commander
JFSOCC	joint force special operations component commander
JOA	joint operations area
JSOAC	joint special operations air component
JOSACC	joint special operations air component commander

JSOTF	joint special operations task force
JSTARS	joint surveillance target attack radar system
JTCB	joint targeting coordination board
JTF	joint task force
JTIDS	joint tactical information distribution system
JTSG	joint targeting steering group

K

km	kilometer

L

LAAD	low-altitude air defense (USMC)
LAC	launch area coordinator
LADC	local area defense commander
LAMPS	Light Airborne Multipurpose System (SH-60)
LAN	local area network
LCC	land component commander
LF	landing force
LHA	general purpose amphibious assault ship
LHD	general purpose amphibious assault ship (with internal dock)
LLTR	low level transit route
LOMEZ	low-altitude missile engagement zone
LPD	amphibious transport dock
LPH	amphibious assault ship, landing platform helicopter
LRS	launch and recovery site
LSD	landing ship, dock
LZ	landing zone
LZCT	landing zone control team

M

MAAP	master air attack plan
MACCS	Marine air command and control system
MACG	Marine air control group
MACS	Marine air control squadron
MAGTF	Marine air-ground task force
MARFOR	Marine Corps forces
MARLO	Marine liaison officer
MASS	Marine air support squadron
MATCD	Marine air traffic control detachment
MCCDC	Marine Corps Combat Development Command
MDS	mission distribution system
MEDEVAC	medical evacuation
MEF	Marine expeditionary force
MEU(SOC)	Marine expeditionary unit (special operations capable)
MEZ	missile engagement zone

MI	military intelligence
MML	master mission library (USN)
MOOTW	military operations other than war
MPR	mission planning request
MRR	minimum risk route
MTACS	Marine tactical air command squadron
MTTP	multiservice tactics, techniques, and procedures
MWCS	Marine wing communications squadron
MWSS	Marine wing support squadron

N

NACCE	Navy airborne command and control elements
NALE	naval and amphibious liaison element
NATO	North Atlantic Treaty Organization
NAVAIDS	navigational aids
NAVSOF	Naval special operations forces
NCA	National Command Authorities
NCC	naval component commander
NFA	no-fire area
NM	nautical miles
NSFS	naval surface fire support
NWDC	Navy Warfare Development Command

O

OAS	offensive air support (USMC)
OIC	officer in charge
OPGEN	formatted general operational message
OPLAN	operation plan
OPORD	operation order
OPR	office of primary responsibility
OPTASK	operational tasking message
OTC	officer in tactical command

P

PAH	position area hazard
PHIBRON	amphibious squadron
PIRAZ	positive identification radar advisory zone
PL	phase line
POC	point of contact
PSS	plans and support section
PSYOP	psychological operations
PZ	pickup zone

R

R2P2	rapid response planning process
RADC	regional air defense commander
RFA	restrictive fire area
RFL	restrictive fire line
RISTA	reconnaissance, intelligence, surveillance, and target acquisition
ROA	restricted operations area
ROE	rules of engagement
ROZ	restricted operations zone
RRP	rapid refueling point
RTF	return to force

S

SAAFR	standard use Army aircraft flight route
SAAWC	sector air defense warfare coordinator (USMC)
SACC	supporting arms coordination center (USN)
SADC	sector air defense commander
SADO	senior air defense officer
SAR	search and rescue
SATCOM	satellite communications
SCC	sea combat commander
SEAD	suppression of enemy air defenses
SEAL	sea-air-land
SHORAD	short-range air defense
SHORADEZ	short-range air defense engagement zone
SOA	special operations aviation
SOC	special operations capable; special operations commander
SOCA	support (submarine) operations coordinating authority
SOCCE	special operations command and control element
SOF	special operations forces
SOLE	special operations liaison element
SOP	standard operating procedure
SPINS	special instructions
SPMAGTF	special purpose MAGTF (USMC)
STANAG	standardization agreement (NATO)
STT	special tactics team (USAF)
STW	strike warfare
STWC	strike warfare commander
SUBOPAUTH	submarine operating authority
SUW	surface warfare
SUWC	surface warfare commander

T

TAADCOORD	theater Army air defense coordinator
TAC	terminal air controller
TAC(A)	tactical air coordinator (airborne)
TACAN	tactical air navigation
TACC	tactical air command center (USMC); tactical air control center (USN); tanker/airlift control center (USAF)
TACGRU	tactical air control group
TACOPDAT	tactical operational data
TACP	tactical air control party
TACRON	tactical air control squadron
TACS	Theater Air Control System (USAF); tactical air control system (USN)
TACT	tactical aviation control team (USA)
TAD	tactical air direction
TADC	tactical air direction center
TADIL	tactical digital information link
TAGS	theater air-ground system
TAH	target area hazard
TAIC	theater airspace information center
TAOC	tactical air operations center (USMC)
TATC	tactical air traffic control
TBMCS	Theater Battle Management Core System
TCA	terminal control areas
TCI	Tomahawk command information
TCT	time-critical target
TDS	tactical data system
TEA	Tomahawk executive agent
TLAM	Tomahawk land attack missile
TLO	Tomahawk liaison officer
TRADOC	United States Army Training and Doctrine Command
TRI-TAC	Tri-Service Tactical Communications Program
TSC	TLAM strike coordinator
TTDBM	Tomahawk tactical data base manager
TTP	tactics, techniques, and procedures

U

UAV	unmanned aerial vehicle
UHF	ultra high frequency
US	United States
USAF	United States Air Force
USMC	United States Marine Corps
USMTF	United States message text format
USW	undersea warfare
USWC	undersea warfare commander

V

VHF	very high frequency

W

WAN	wide area network
WCS	weapons control status
WEZ	weapons engagement zone
WOC	wing operations center (USAF)

PART II – TERMS AND DEFINITIONS

air operations center. The principal air operations installation from which aircraft and air warning functions of combat air operations are directed, controlled, and executed. It is the senior agency of the Air Force Component Commander from which command and control of air operations are coordinated with other components and Services. Also called **AOC**. (Joint Publication 1-02)

airspace control authority. The commander designated to assume overall responsibility for the operation of airspace control system in the airspace control area. (Joint Publication 1-02)

airspace control order. An order implementing the airspace control plan that provides the details of the approved requests for airspace control measures. It is published either as part of the air tasking order or as a separate document. Also called **ACO**. (Joint Publication 1-02)

airspace control plan. The document approved by the joint force commander that provides specific planning guidance and procedures for the airspace control system for the joint force area of responsibility/joint operations area. Also called **ACP**. (Joint Publication 1-02)

airspace information center. The ATS facility that performs the primary A2C2 Services mission and the secondary airspace information services mission.

air tasking order. A method used to task and disseminate to components, subordinate units, and command and control agencies projected sorties/capabilities/forces to targets and specific missions. Normally provides specific instructions to include call signs, targets, controlling agencies, etc., as well as general instructions. Also called **ATO**. (Joint Publication 1-02)

air traffic control and landing systems. Department of Defense facilities, personnel, and equipment (fixed, mobile, and seaborne) with associated avionics to provide safe, orderly, and expeditious aerospace vehicle movements worldwide. Also called **ATCALS**. (Joint Publication 1-02)

amphibious objective area. A geographical area, delineated in the initiating directive for purposes of command and control, within, which is, located the objective(s) to be secured by the amphibious task force. This area must be of sufficient size to ensure accomplishment of the amphibious task force's mission and must provide sufficient area for conducting necessary sea, air, and land operations. (Joint Publication 1-02)

Army air-ground system. The Army system which provides for interface between Army and tactical air support agencies of other Services in the planning, evaluating, processing, and coordinating of air support requirements and operations. It is composed of appropriate staff members, including G-2 air and G-3 air personnel, and necessary communications equipment. (Joint Publication 1-02)

Army airspace command and control. Those actions that ensure the synchronized use of airspace and enhance the command and control of those forces using airspace. This

system includes those organizations, personnel, facilities, and procedures required to perform the airspace control function.

battlefield coordination detachment. An Army liaison provided by the Army component commander to the Air Operations Center (AOC) and/or to the component designated by the joint force commander to plan, coordinate, and deconflict air operations. The battlefield coordination detachment processes Army requests for tactical air support, monitors and interprets the land battle situation for the AOC, and provides the necessary interface for exchange of current intelligence and operational data. Also called **BCD**. (Joint Publication 1-02)

control and reporting center. A mobile command, control, and communications radar element of the US Air Force theater air control system subordinate to the air operations center. The control and reporting center possesses four Modular Control Equipment operations modules and integrates a comprehensive air picture via multiple data links from air-, sea-, and land-based sensors as well as from its surveillance and control radars. It performs decentralized command and control of joint operations by conducting threat warning, battle management, theater missile defense, weapons control, combat identification, and strategic communications. Also called **CRC**. (Joint Publication 1-02)

control and reporting element. A mobile radar element of the TACS that is subordinate to the CRC. It is normally deployed into forward areas to extend radar coverage and to provide control of air operations, early warning surveillance, and gap filler service. (USAF)

coordinating altitude. A procedural airspace control method to separate fixed- and rotary-wing aircraft by determining an altitude below which fixed-wing aircraft will normally not fly and above which rotary-wing aircraft normally will not fly. The coordinating altitude is normally specified in the airspace control plan and may include a buffer zone for small altitude deviations. (Joint Publication 1-02)

fighter engagement zone. In air defense, that airspace of defined dimensions within which the responsibility for engagement of air threats normally rests with fighter aircraft. Also called **FEZ**. (Joint Publication 1-02)

fires. The effects of lethal or nonlethal weapons. (Joint Publication 1-02.)

fire support. Fires that directly support land, maritime, amphibious, and special operation forces to engage enemy forces, combat formations, and facilities in pursuit of tactical and operational objectives. (Joint Publication 1-02)

joint fire support. Joint fires that assist land, maritime, amphibious, and special operations forces to move, maneuver, and control territory, populations, and key waters. (Joint Publication 1-02.)

joint force air component commander. The joint force air component commander derives authority from the joint force commander who has the authority to exercise operational control, assign missions, direct coordination among subordinate commanders, redirect and organize forces to ensure unity of effort in the accomplishment of the overall

mission. The joint force commander will normally designate a joint force air component commander. The joint force air component commander's responsibilities will be assigned by the joint force commander (normally these would include, but not be limited to, planning, coordination, allocation, and tasking based on the joint force commander's apportionment decision). Using the joint force commander's guidance and authority, and in coordination with other Service component commanders and other assigned or supporting commanders, the joint force air component commander will recommend to the joint force commander apportionment of air sorties to various missions or geographic areas. Also called **JFACC**. (Joint Publication 1-02)

Link-4A. TADIL C (NATO Link 4A) is a netted, time division data transmission link between control station and controlled aircraft that can operate in either one-to-one or one-to-many/many-to-one modes. It provides the capability for automatic transmission of orders, status, and other information. Data exchange is accomplished on a fully automatic link at 5,000 BPS, using serial transmission. TADIL C is a nonsecure link that operates in the UHF frequency range. It has unique message standards and protocols and does not interface directly with TADIL A, B, and J.

Link-11. TADIL A (NATO Link 11) is a half-duplexed, netted link that normally operates by roll call from a Net Control Station (NCS). TADIL A can also operate in the broadcast mode. The roll-call mode of operation used in the TADIL A interface requires that each PU respond in turn while all other stations are receiving. A NCS initiates the roll call by addressing and transmitting an interrogation message to a specific PU that then responds by transmitting its data. The NCS then interrogates the next PU in the prescribed roll call. TADIL A can be transmitted on high frequency (HF) and/or ultra high frequency (UHF) bands. Data speed can be selected from bit rates of 2,250 or 1,364 bits per second (BPS). Dual side band diversity operation and Doppler shift correction features improve reliability and accuracy of data exchange.

Link-16. TADIL J (NATO Link 16) is a nodeless, high-capacity, multifunctional, secure, jam-resistant tactical data link designed for the exchange of fixed format and voice messages using the Joint Tactical Information Distribution System (JTIDS) Class 2/multifunctional Information Distribution System (MIDS) terminal. JTIDS uses the principle of Time Division Multiple Access (TDMA), an architecture that employs time slot interleaving to provide multiple, simultaneous communications nets. Since JTIDS is an UHF system, transmitted messages can only be received by units that are within Line of Sight (LOS). However, JTIDS provides a means to relay beyond LOS. All JUs are preassigned sets of multiple time slots in which to transmit their data and in which to receive data from other units. The time slots of a net can be parceled out to one or more Network Participation Groups (NPGs). An NPG is defined by its function and also by the types of messages that will be transmitted on it. This division of the net into functional groups allows JUs to participate only on the NPGs for the functions they perform.

low level transit route. A temporary corridor of defined dimensions established in the forward area to minimize the risk to friendly aircraft from friendly air defenses or surface forces. (Joint Publication 1-02)

minimum-risk route. A temporary corridor of defined dimensions recommended for use by high-speed, fixed-wing aircraft that presents the minimum known hazards to low-flying aircraft transiting the combat zone. Also called **MRR**. (Joint Publication 1-02)

positive control. A method of airspace control which relies on positive identification, tracking, and direction of aircraft within an airspace, conducted with electronic means by an agency having the authority and responsibility therein. (Joint Publication 1-02)

procedural control. A method of airspace control which relies on a combination of previously agreed and promulgated orders and procedures. (Joint Publication 1-02)

special tactics team. An Air Force team composed primarily of special operations combat control and pararescue personnel. The team supports joint special operations by selecting, surveying, and establishing assault zones; providing assault zone terminal guidance and air traffic control; conducting direct action missions; providing medical care and evacuation; and, coordinating, planning, and conducting air, ground, and naval fire support operations. (Joint Publication 1-02)

theater air-ground system. A system of systems consisting of the theater air control system (TACS) (USAF), the Army air ground system (AAGS) (USA), the Marine air command and control system (MACCS) (USMC), and the Navy tactical air control system (NTACS) (USN).

unmanned aerial vehicle. A powered, aerial vehicle that does not carry a human operator, uses aerodynamic forces to provide vehicle lift, can fly autonomously or be piloted remotely, can be expendable or recoverable, and can carry a lethal or nonlethal payload. Ballistic or semiballistic vehicles, cruise missiles, and artillery projectiles are not considered unmanned aerial vehicles. Also called **UAV**. (Joint Publication 1-02)

weapon engagement zone. In air defense, airspace of defined dimensions within which the responsibility for engagement of air threats normally rests with a particular weapon system. Also called **WEZ**. (Joint Publication 1-02)

INDEX

A

A2C2 II-7, III-4, III-5, III-6, III-7, III-8, III-9, A-1, A-2, A-3, A-4, A-5, A-6, A-7, A-8, A-9, A-10, A-11, A-12, A-13, C-5, Glossary-1, Glossary-10
AADC viii, I-5, II-2, II-5, A-4, B-5, C-1, C-6, D-7, F-1, F-2, F-4, F-5, F-6, F-7, F-8, F-9, F-10, F-11, Glossary-1
AAGS A-1, A-4, A-5, A-6, Glossary-1, Glossary-13
AAMDC II-7, A-4, A-8, Glossary-1
AAW III-20, B-9, D-2, D-11, D-12, Glossary-1
ABCCC C-3, C-5, C-8, Glossary-1
ACA vii, viii, I-3, I-5, I-6, II-1, II-2, II-3, II-4, II-5, II-6, III-3, III-5, III-8, III-13, III-15, III-17, III-19, A-4, A-5, A-6, A-8, A-9, A-11, C-1, C-6, F-1, F-3, F-4, F-6, F-7, F-8, F-9, F-10, F-11, G-2, Glossary-1
ACE III-16, III-17, III-20, D-1, D-3, D-4, D-5, D-6, D-7, D-9, D-10, D-11, D-12, Glossary-1
ACM viii, I-3, II-4, II-5, III-3, III-4, III-7, III-16, III-17, A-2, A-3, A-9, A-10, A-11, B-5, C-6, D-12, E-2, F-1, F-9, F-11, F-12, G-10, H-1, H-2, Glossary-1
ACMREQ II-5, A-11, Glossary-1
ACO vii, viii, I-5, II-4, II-5, II-6, III-3, III-4, III-5, III-25, A-4, A-11, C-1, C-4, C-7, C-8, G-10, Glossary-1, Glossary-10
ACP vii, viii, I-1, I-3, I-5, II-1, II-3, II-4, II-5, II-6, III-3, III-8, III-17, A-10, C-1, C-4, C-8, D-7, F-5, F-6, G-10, H-1, Glossary-1, Glossary-10
ADC II-7, B-4, B-5, B-9, F-5, F-6, F-9, Glossary-1
ADIZ II-4, F-2, Glossary-1
ADS III-13, Glossary-1
AETACS II-7, C-5, C-8, H-1, Glossary-1
AIC II-7, III-8, A-6, A-11, A-13, Glossary-1
airborne battlefield command and control center (*see* ABCCC)
airborne elements of the theater air control system (*see* AETACS)
airborne warning and control system (*see* AWACS)
air corridor III-4, A-2, A-3, A-11, F-1, F-11
air defense action area F-1
air defense area F-1, F-2, F-4, F-11
air defense commander (*see* ADC)
air defense identification zone (*see* ADIZ)
air defense operations area F-2
air defense section (*see* ADS)
air mobility division (*see* AMD)
air operations center (*see* AOC)
air operations control center (*see* AOCC)
air reconnaissance A-8, D-2, D-8
air resource element coordinator (*see* AREC)
airspace control i, v, vii, viii, ix, I-1, I-2, I-3, I-4, I-5, I-6, II-1, II-2, II-3, II-4, II-5, II-6, III-1, III-3, III-4, III-10, III-12, III-13, III-19, III-20, A-4, A-5, A-6, A-7, A-9, A-10, B-1, C-1, C-2, C-4, C-5, C-6, C-7, C-8, D-5, D-6, D-7, D-10, D-11, D-12, E-2, F-1, F-2, F-3, F-4, F-5, F-6, F-7, F-8, F-9, F-10, F-11, F-12, G-7, G-10, Glossary-11, Glossary-13
airspace control area I-2, I-4, I-5, II-2, II-3, II-4, F-2, F-3, F-12, Glossary-10
airspace control authority (*see* ACA)

airspace control boundary viii, I-4, I-5
airspace control means request (*see* ACMREQ)
airspace control measure (*see* ACM)
airspace control order (*see* ACO)
airspace control plan (*see* ACP)
airspace control sector I-4, II-2, II-3, F-2, F-3
airspace coordination area v, III-5, III-6, F-3, G-7
airspace information center (*see* AIC)
air support control section (*see* ASCS)
air support coordinator (*see* ASC)
air support operations center (*see* ASOC)
air tasking order (*see* ATO)
air traffic control (*see* ATC)
air traffic control section (*see* ATCS)
air traffic services (*see* ATS)
AMD C-4, Glossary-1
amphibious objective area (*see* AOA)
amphibious ready group (*see* ARG)
amphibious squadron (*see* PHIBRON)
amphibious tactical air control system (*see* ATACS)
antiair warfare (*see* AAW)
AOA III-10, III-11, III-12, III-19, III-23, III-24, A-9, D-6, D-8, D-10, D-11, F-3, F-4, Glossary-1
AOC II-3, II-7, III-8, A-8, A-9, C-3, C-8, D-7, Glossary-1, Glossary-10
AOCC III-15, Glossary-1
area air defense commander (*see* AADC)
AREC II-7, III-14, B-4, B-6, Glossary-1
ARG vi, III-12, III-13, III-15, III-16, III-17, III-19, III-20, B-7, Glossary-1
Army Air and Missile Defense Command (*see* AAMDC)
Army air ground system (*see* AAGS)
Army airspace command and control (*see* A2C2)
Army Tactical Missile System (*see* ATACMS)
ASC III-13, Glossary-1
ASCS III-13, Glossary-1
ASOC II-7, III-3, III-7, III-8, III-9, C-3, C-5, C-8, D-8, D-9, Glossary-2
ATACMS vii, viii, ix, III-4, III-5, III-7, III-8, III-9, III-10, A-4, A-9, H-2, H-3, Glossary-2
ATACS III-10, III-12, Glossary-2
ATC III-1, D-5, D-8, E-3, Glossary-2
ATCS III-13, Glossary-2
ATO II-1, II-6, III-3, III-4, III-13, III-15, III-16, III-17, III-19, III-20, III-23, III-24, III-25, A-4, B-6, C-4, C-5, C-7, C-8, D-6, D-9, G-10, Glossary-2, Glossary-10
ATS A-1, A-6, A-7, A-9, A-10, A-11, A-12, A-13, Glossary-2, Glossary-10
aviation combat element (*see* ACE)
AWACS C-3, C-6, C-7, C-8, D-7, Glossary-2

B

base defense zone (*see* BDZ)
battlefield coordination detachment (*see* BCD)

BCD II-7, III-5, III-8, III-9, III-10, A-4, A-8, A-11, C-3, C-4, H-2, Glossary-2, Glossary-11
BDZ II-4, F-4, Glossary-2
BULLSEYE III-9, H-1, H-2, H-3

C

C2 ii, v, vii, viii, ix, I-1, I-2, I-3, I-4, II-3, II-6, III-7, III-8, III-9, III-10, III-16, III-17, III-18, III-19, III-21, III-24, A-1, A-2, A-6, A-7, A-12, A-13, B-2, B-3, B-4, B-9, C-1, C-2, C-3, C-4, C-5, C-6, C-7, C-8, D-3, D-5, D-6, D-11, E-2, F-2, F-4, F-6, G-10, H-1, Glossary-2
C2W B-2, B-5, B-9, Glossary-2
C2WC B-4, B-5, B-9, Glossary-2
CA II-4, A-11, Glossary-2
CALCM vii, viii, III-4, H-3, Glossary-2
carrier battle group (*see* CVBG)
CAS ix, III-3, III-8, III-10, III-13, III-14, III-16, III-18, C-2, C-3, C-6, D-2, D-8, D-9, D-10, E-2, E-3, F-3, F-9, G-4, G-7, Glossary-2
CE III-15, D-1, Glossary-2
centralized control II-5, A-8, C-1, C-2, F-10
CFL G-1, G-2, G-9, Glossary-2
CLF III-10, III-12, III-14, III-18, III-19, III-20, III-21, G-3, Glossary-2
close air support (*see* CAS)
COD C-4, C-7, C-8, Glossary-2
combat operations division (*see* COD)
combat plans division (*see* CPD)
command and control (*see* C2)
command and control warfare (*see* C2W)
command and control warfare commander (*see* C2WC)
command element (*see* CE)
command relationships viii, I-4, I-5
commander, landing force (*see* CLF)
communications ix, I-3, I-4, I-5, II-1, II-5, II-6, III-3, III-10, III-13, III-14, III-16, III-18, III-23, III-24, III-25, A-1, A-3, A-6, A-7, A-12, A-13, B-9, C-1, C-2, C-6, C-7, C-8, D-3, D-4, D-5, D-6, D-7, D-9, D-10, D-11, D-12, D-13, E-2, F-4
component command I-1, I-4, I-6, G-10
Contingency Theater Automated Planning System (*see* CTAPS)
control and reporting center (*see* CRC)
control and reporting element (*see* CRE)
conventional air launched cruise missile (*see* CALCM)
coordinated fire line (*see* CFL)
coordinating altitude (*see* CA)
counterair C-2, C-6, H-1
counterland C-2
countersea C-2
CPD C-4, C-7, C-8, Glossary-2
CRC II-7, A-12, C-3, C-5, C-6, C-7, C-8, D-7, Glossary-2, Glossary-11
CRE II-7, C-3, C-5, D-7, Glossary-2
CTAPS II-4, III-16, Glossary-3
CVBG III-13, III-14, III-17, III-18, III-20, III-22, B-5, B-6, B-9, Glossary-3

D

DAS III-13, D-2, Glossary-3
DASC II-7, III-3, III-16, III-19, III-20, D-4, D-5, D-7, D-8, D-9, D-10, D-13, Glossary-3
decentralized execution II-6, C-1, C-2, C-5
deconfliction viii, ix, II-5, II-6, III-2, III-3, III-4, III-6, III-7, III-8, III-9, III-10, III-17, III-23, III-24, III-25, A-1, A-2, A-3, A-4, A-5, A-11, B-2, C-7, E-2, F-3, F-4, F-12, G-7, H-2, H-3
deep air support (*see* DAS)
delegation of authority viii, I-3, I-4, A-5, B-4
direct air support center (*see* DASC)

E

electronic warfare I-3, A-4, A-10, B-2, B-7, D-2, D-6, E-2
en route altitudes III-5

F

FAC III-8, III-14, III-15, III-16, III-17, C-3, D-13, Glossary-3
FAC(A) III-14, III-16, C-3, C-6, D-13
FEZ II-4, F-5, F-11, Glossary-3, Glossary-11
FFA F-12, G-2, G-5, Glossary-3
fighter engagement zone (*see* FEZ)
fire support III-4, III-9, III-14, III-15, III-17, A-3, A-7, A-13, C-5, D-3, F-7, F-8, F-11, G-1, G-5, G-8, G-10, Glossary-11
fire support coordinating measure (*see* FSCM)
fire support coordination center (*see* FSCC)
fire support coordination line (*see* FSCL)
fire support element (*see* FSE)
firepower umbrella F-2, F-5
fires I-2, III-4, III-7, III-8, III-9, III-15, III-17, A-2, A-3, A-5, A-10, D-2, D-7, F-3, F-7, F-12, G-2, G-4, G-5, G-6, G-7, G-8, G-9, G-10, Glossary-11
firing positions III-5
forward air controller (*see* FAC)
forward air controller (airborne) (*see* FAC[A])
free fire area (*see* FFA)
FSCC II-7, III-12, D-8, D-9, Glossary-3
FSCL III-5, III-7, G-2, G-3, G-4, G-5, G-10, Glossary-3
FSCM III-4, III-7, A-9, G-1, G-7, G-8, G-9, H-1, H-2, Glossary-3
FSE II-7, III-5, III-7, III-8, III-9, III-10, III-16, A-3, A-6, A-7, Glossary-4

G

GCE III-15, III-17, D-1, D-8, D-9, Glossary-4
ground command element (*see* GCE)

H

HC III-13, Glossary-4

HCS III-11, III-12, III-13, Glossary-4
helicopter coordination section (*see* HCS)
helicopter coordinator (*see* HC)
HIDACZ II-4, A-5, A-13, F-6, F-7, F-12, Glossary-4
high-density airspace control zone (*see* HIDACZ)
HN I-1, I-2, I-3, II-2, II-3, III-1, III-9, C-1, C-4, Glossary-4
host nation (*see* HN)

I

integration i, vii, viii, ix, I-3, I-5, II-2, II-3, II-6, III-1, III-4, III-19, III-21, III-23, A-1, A-4, A-5, A-6, A-7, A-9, A-11, A-13, B-2, C-2, C-5, C-7, C-8, D-2, D-3, D-5, D-8, D-10, D-12, E-1
interoperability vii, I-3, II-6, III-2

J

JAOC II-7, III-2, III-5, III-8, III-9, III-10, A-4, A-8, C-4, C-5, C-6, C-7, C-8, E-2, G-10, H-2, Glossary-4
JEZ II-4, F-7, F-11, Glossary-4
JFACC viii, I-5, II-2, II-3, III-9, III-13, III-17, III-18, III-21, III-22, III-23, III-24, III-25, A-8, B-2, C-1, C-3, C-4, C-6, C-8, E-3
JFC i, viii, I-2, I-3, I-4, I-5, II-1, II-2, II-3, II-5, II-6, III-4, III-7, III-12, III-21, III-25, A-1, A-3, A-5, A-6, C-3, C-6, E-1, E-2, F-5, G-5, G-10, Glossary-4
joint air operations center (*see* JAOC)
joint engagement zone (*see* JEZ)
joint force air component commander (*see* JFACC)
joint force commander (*see* JFC)
Joint Surveillance Target Attack Radar System (*see* JSTARS)
JSTARS C-3, C-6, Glossary-5

L

LAC III-21, III-22, III-23, III-24, III-25, B-6, Glossary-5
land component commander A-4, C-5, C-6
launch area coordinator (*see* LAC)
liaison officer I-6, III-21, A-8, A-10, C-4, C-5, C-8, G-7, Glossary-1
LLTR II-4, F-8, F-10, Glossary-5, Glossary-12
LOMEZ F-7, F-9, F-11, Glossary-5
low altitude missile engagement zone (*see* LOMEZ)
low level transit route (*see* LLTR)

M

MACCS vi, III-10, III-12, III-14, D-1, D-3, D-5, D-6, D-8, D-9, D-10, D-11, D-12, D-13, Glossary-5, Glossary-13
MACG vi, III-16, D-3, D-4, D-5, D-10, Glossary-5
MACS D-4, D-8, Glossary-5
Marine air command and control system (*see* MACCS)
Marine air control group (*see* MACG)

Marine air control squadron (*see* MACS)
Marine air support squadron (*see* MASS)
Marine Corps tactical air command center (*see* TAOC)
Marine expeditionary unit (*see* MEU)
Marine tactical air control squadron (*see* MTACS)
MASS D-4, Glossary-5
MEU vi, III-15, III-16, III-17, III-18, III-20, B-6, D-1, D-5, Glossary-5
MEZ II-4, D-10, Glossary-5
military operations other than war (*see* MOOTW)
minimum risk route (*see* MRR)
missile engagement zone (*see* MEZ)
MOOTW vii, viii, III-1, III-2, C-3, C-4, C-6, Glossary-6
MRR II-4, F-7, F-8, F-9, Glossary-6, Glossary-13
MTACS D-4, D-5, D-6, Glossary-6

N

naval component commander (*see* NCC)
naval surface fire support (*see* NSFS)
Navy tactical air control center (*see* TACC)
NCC III-21, III-22, III-23, III-25, B-6, Glossary-6
NFA F-12, G-2, G-6, G-7, Glossary-6
no fire area (*see* NFA)
NSFS III-7, III-15, III-18, B-1, B-2, B-5, G-4, G-8, G-9, G-10, Glossary-6

O

officer in tactical command (*see* OTC)
OTC B-3, B-4, B-6, Glossary-6

P

phase lines A-2, G-9, Glossary-6
PHIBRON III-11, III-12, III-13, III-14, III-15, Glossary-6
PHIBRON air officer III-11, III-13, III-14, III-15
PHIBRON operations and plans officer III-13
PIRAZ F-9, Glossary-6
positive control II-4, II-5, III-4, III-17, III-18, A-2, D-6, F-2, G-1, Glossary-13
positive identification radar advisory zone (*see* PIRAZ)
procedural control II-3, II-5, III-19, A-2, A-5, A-10, D-11, F-2, G-4, Glossary-13

R

R2P2 III-17, III-18, III-19, Glossary-7
RADC II-5, B-5, Glossary-7
rapid response planning process (*see* R2P2)
regional air defense commander (*see* RADC)
restricted operations area (*see* ROA)
restricted operations zone (*see* ROZ)

restrictive fire area (*see* RFA)
restrictive fire line (*see* RFL)
return to force (*see* RTF)
RFA G-2, G-7, G-8, Glossary-7
RFL G-5, G-6, Glossary-7
ROA II-4, F-9, Glossary-7
ROZ II-4, III-3, III-4, III-5, III-6, III-8, A-5, F-9, F-12, Glossary-7
RTF II-4, B-5, D-11, F-9, Glossary-7

S

SAAFR II-4, A-2, F-10, F-11, Glossary-7
SACC II-7, III-12, III-13, III-14, III-15, III-17, III-18, D-9, Glossary-7
SADC II-5, III-13, B-5, B-9, Glossary-7
sector air defense commander (*see* SADC)
simplicity C-2
special instructions (*see* SPINS)
special tactics team (*see* STT)
SPINS II-3, II-6, III-3, III-4, D-6, Glossary-7
standard use Army aircraft flight routes (*see* SAAFR)
strategic attack C-2
strategy division C-4
strike warfare III-23, III-24, B-3, B-4, B-5, Glossary-7
strike warfare commander (*see* STWC)
STT C-3, E-2, E-3, Glossary-7
STWC III-23, III-24, B-3, B-4, B-5, Glossary-7
supporting arms coordination center (*see* SACC)
supporting coordinators B-6
surface warfare x, B-1, B-2, B-3, B-7, Glossary-7
surface warfare commander (*see* SUWC)
SUWC B-3, B-4, B-6, Glossary-7

T

TACC II-3, II-7, III-11, III-12, III-13, III-14, III-15, III-16, III-17, III-18, III-19, B-9, D-4, D-5, D-6, D-7, D-8, D-9, D-13, Glossary-8
TACP II-7, II-8, III-11, III-16, C-3, C-5, D-9, D-10, Glossary-8
TACS III-10, III-11, III-12, III-14, A-5, C-1, C-3, C-4, C-5, C-6, C-7, Glossary-8, Glossary-11, Glossary-13
TACT II-7, A-13, Glossary-8
tactical air control party (*see* TACP)
tactical air control system (*see* TACS)
tactical air direction center (*see* TADC)
tactical air traffic control (*see* TACT)
tactical digital information link (*see* TADIL)
TADC III-11, III-12, III-19, Glossary-8
TADIL B-8, C-8, D-5, D-6, D-8, D-12, D-13, Glossary-8, Glossary-12
TAGS I-1, A-1, A-5, E-1, Glossary-8
TAOC II-7, III-19, III-20, D-4, D-5, D-6, D-7, D-8, D-12, D-13, Glossary-8

target area deconfliction III-6
TBMCS II-4, III-16, C-8, Glossary-8
TEA III-21, III-22, III-24, III-25, Glossary-8
terminal services A-11, A-12
theater air ground system (*see* TAGS)
Theater Battle Management Core System (*see* TBMCS)
TLAM vii, ix, III-21, III-22, III-23, III-24, III-25, B-2, B-6, H-3, Glossary-8
TLAM strike coordinator (*see* TSC)
TLO III-22, III-23, III-25, Glossary-8
Tomahawk executive agent (*see* TEA)
Tomahawk land attack missile (*see* TLAM)
Tomahawk liaison officer (*see* TLO)
tower teams A-12
TSC III-21, III-22, III-23, III-24, III-25, B-2, B-6, Glossary-8

U

UAV v, vii, viii, III-2, III-3, A-4, A-12, D-8, F-9, G-10, Glossary-8, Glossary-13
undersea warfare B-1, B-2, B-3, B-7, Glossary-8
undersea warfare commander (*see* USWC)
unity of command C-1
unity of effort I-5, C-1, D-6, Glossary-11
unmanned aerial vehicle (*see* UAV)
USWC B-3, B-4, B-6, Glossary-8

W

weapons engagement zone (*see* WEZ)
WEZ II-4, D-10, F-11, Glossary-9, Glossary-13
wing operations center (*see* WOC)
WOC C-3, C-5, Glossary-9

Z

zone of fire vi, G-6, G-8

FM 3-100.2 (FM 100-103-1)
MCRP 3-25D
NTTP 3-52.1(A)
AFTTP(I) 3-2.16
30 June 2000

By Order of the Secretary of the Army:

ERIC K. SHINSEKI
General, United States Army
Chief of Staff

Official:

JOEL B. HUDSON
Administrative Assistant to the
Secretary of the Army
0013302

DISTRIBUTION:
***Active Army, Army National Guard, and U.S. Army Reserve*: To be distributed in accordance with the initial distribution number 115272, requirements for FM 3-100.2** (FM 100-103-1)**.**

By Order of the Secretary of the Air Force:

TIMOTHY A. KINNAN
Major General, USAF
Commander
Headquarters Air Force Doctrine Center

Air Force Distribution: F

MARINE CORPS: PCN 14400007800