2 March 2001

FM 3-09.22 (FM 6-20-2)
Tactics, Techniques, and Procedures for Corps Artillery, Division Artillery, and Field Artillery Brigade Operations

DISTRIBUTION RESTRICTION:
Approved for public release; distribution is unlimited.

HEADQUARTERS,
DEPARTMENT OF THE ARMY

*** FM 3-09.22** (FM 6-20-2)

Field Manual
No. 3-09.22

Headquarters
Department of the Army
Washington, DC, 2 March 2001

Tactics, Techniques, and Procedures for Corps Artillery, Division Artillery, and Field Artillery Brigade Operations

Contents

Page

PREFACE viii

Chapter 1 **FIELD ARTILLERY MISSION, ROLES, CAPABILITIES, AND TASKS** 1-1
Section I - Mission, Roles, and Capabilities 1-1
Field Artillery Mission 1-1
Field Artillery Roles 1-2
Capabilities 1-4
Section II - Field Artillery Organization for Combat 1-6
General 1-6
Command Relationships 1-7
Fundamentals 1-7
Section III - Tasks and Responsibilities 1-8
Corps Artillery 1-8
Division Artillery 1-11

Distribution Restriction: Approved for public release. Distribution is unlimited.

*This publication supersedes FM 6-20-2, 7 January 1993.

Field Artillery Brigades 1-12
US Marine Corps Artillery Regiment 1-13

Chapter 2 **ORGANIZATIONS AND SYSTEMS CAPABILITIES AND LIMITATIONS** 2-1
Section I - Field Artillery Organizations 2-1
Corps Artillery 2-1
Division Artillery 2-2
Field Artillery Brigade 2-4
US Marine Corps Artillery Regiment 2-5
Section II - Intelligence and Target Acquisition Systems 2-6
General 2-6
Intelligence Force Structure 2-7
Corps Arty and Div Arty Target Acquisition Assets 2-7

Chapter 3 **FIELD ARTILLERY TACTICS AND TECHNIQUES** 3-1
Section I - FA Fires in Support of Offensive Combat Operations 3-1
General 3-1
Employment of Offensive FA Fires 3-1
FA Organization for Combat 3-4
FA Positioning in the Offense 3-5
Displacements in the Offense 3-6
Communications 3-6
Target Acquisition 3-7
Survey 3-7
Section II - FA Fires in Support of Defensive Combat Operations 3-8
General 3-8
Employment of Defensive FA Fires 3-9
FA Organization for Combat 3-10
Positioning and Displacements in the Defense 3-12
Target Acquisition 3-12
Meteorology 3-13
Survey 3-13
Section III - FA Fires in Support of Other Operations 3-13
General 3-13
Counterfire Operations 3-13
Deep Operations 3-15
Rear Security Operations 3-16
Suppression of Enemy Air Defenses 3-17
Section IV - Other Operations 3-18

General 3-18
Infiltrations.....3-19
Retrograde Operations 3-19
River Crossings.....3-20
Encirclements 3-20
Passage of Lines and Relief in Place 3-21
Section V - Stability Operations and Support Operations.....3-23
General 3-23
FA Tactics and Techniques in Support of Stability Operations and Support Operations 3-24

Chapter 4 **FIELD ARTILLERY COMMAND POST OPERATIONS** 4-1
Section I - FA CP Responsibilities, Organizations, and Functions 4-1
Role of Effective Information Management.....4-1
FA Command Posts.....4-2
Role of FA Commanders and Staff.....4-2
CP Organizations.....4-4
Functions and Responsibilities of Key Personnel.....4-5
Tactical Operations Center Functions and Responsibilities 4-9
Administration and Logistic Operations Center Functions and Responsibilities 4-11
Section II - Corps Arty CP Operations.....4-12
General 4-12
Tactical Operations Centers 4-12
Survey Planning and Coordination Element.....4-14
Liaison Sections.....4-15
Corps Arty Administration and Logistic Center.....4-15
Section III - Div Arty CP Operations.....4-16
Tactical Operations Center 4-16
Target Acquisition Battery.....4-19
Section IV – FA Brigade CP Operations 4-19
Tactical Operations Centers 4-19
Headquarters Support Section 4-21
Section V – FA Relationship and Interfaces with External FS Agencies 4-21
General 4-21
Force Fire Support Cells/Elements.....4-21
Deep Operations Coordination Cells 4-22

Chapter 5 **FIELD ARTILLERY COMBAT SERVICE SUPPORT** 5-1
Combat Service Support Characteristics.....5-1

Combat Service Support Functions 5-2
Combat Service Support Infrastructure 5-18
Combat Service Support of Offensive Operations 5-20
Combat Service Support of Defensive Operations 5-20
Combat Service Support of Stability Operations 5-20
Combat Service Support of Support Operations 5-21

Chapter 6 FIELD ARTILLERY MISSION PLANNING, PREPARATION, AND EXECUTION .. 6-1
Section I – Force Headquarters-Force Artillery Planning Interfaces 6-1
General 6-1
Force Main CP Planning Steps and Outputs 6-2
Section II – The Field Artillery Mission Planning Process 6-6
General 6-6
Force Artillery Planning Steps and Outputs 6-7
Section III – Field Artillery Planning Considerations 6-22
Field Artillery-Focused Intelligence Preparation of the Battlefield 6-22
The FA Commander's and Staff Estimates 6-24
FA Force Projection Operations 6-29
Field Artillery Organization for Combat 6-30
Command Post and Unit Positioning and Displacements 6-31
Targeting 6-33
Counterfire Operations 6-34
FA Communications 6-36
Fire Support Coordinating Measures 6-37
Fratricide Prevention and Clearance of Fires 6-39
Combat Service Support Planning Procedures 6-42
Survey Operations 6-48
Meteorological Operations 6-48
Target Acquisition Radar Operations 6-49
Alternate Command Post Capabilities 6-49
Section IV – Mission Preparation Phase 6-50
General 6-50
Validity Checks 6-50
Force Protection 6-51
Target Tracking 6-52
Logistic Preparations 6-52
Rehearsals and Back Briefs 6-53
Section V – Mission Execution Phase 6-54

General 6-54
Information Exchange 6-54
Clearance of Fires 6-55
Target Attack 6-55
Counterfire Operations 6-55
Logistics Operations 6-55
CP Displacements 6-56
Alternate Command Post Operations 6-56
Battle Damage Assessment 6-56
Reorganization and Reconstitution 6-56

Appendix A **FIELD ARTILLERY IN COMBINED OPERATIONS** A-1
Interoperability Considerations A-1

Appendix B **FIELD ARTILLERY COMMAND RELATIONSHIPS** B-1

Appendix C **FIELD ARTILLERY ORGANIZATION FOR COMBAT** C-1
Five Fundamentals C-1
Example C-1

Appendix D **FIELD ARTILLERY TACTICAL MISSIONS** D-1
Standard Tactical Missions D-1
Nonstandard Tactical Missions D-2

Appendix E **ARTILLERY HEADQUARTERS AND HEADQUARTERS BATTERIES** E-1
Section I - Corps Arty Headquarters and Headquarters Battery E-1
Mission E-1
Corps Arty Headquarters E-1
Headquarters Battery E-3
Section II - Div Arty Headquarters and Headquarters Battery E-3
Mission E-3
Div Arty Headquarters E-3
Headquarters Battery E-6
Section III - FA Brigade Headquarters and Headquarters Battery E-6
Mission E-6
Brigade Headquarters E-6
Headquarters Battery E-8
Section IV - USMC Artillery Regiment Headquarters Battery E-8
Mission E-8
Regimental Headquarters E-8

Appendix F **LIAISON FUNCTIONS AND RESPONSIBILITIES** F-1
Definition F-1
Doctrinal Requirements F-1
Field Artillery Liaison Team Organization F-1
Fire Support Liaison F-1
On-Order Missions F-2
Methods for Establishing Liaison F-2
Liaison Responsibilities F-3

Appendix G **FIELD ARTILLERY SUPPORT PLAN** G-1
Field Artillery Support Plan Format G-1
Standards in FA Support Plan Development G-1
Field Artillery Support Plan Outline G-2
Survey Tab to the Field Artillery Support Plan G-9
AFATDS (or IFSAS) Tab to the Field Artillery Support Plan G-12
Target Acquisition Tab to the Field Artillery Support Plan G-17
Meteorology Tab to the Field Artillery Support Plan G-22
Artillery Intelligence Tab to the Field Artillery Support Plan G-25
Administrative-Logistics Tab to the Field Artillery Support Plan G-28
Field Artillery Synchronization Matrix Tab to the Field Artillery Support Plan G-38

Appendix H **FIELD ARTILLERY FORCE PROJECTION OPERATIONS** H-1
Mobilization and Force Projection H-1
Predeployment/Mobilization Activities and Movement to Port of Embarkation H-1
Intertheater Force Deployments H-3
Deliberate/Benign Entry Operations H-3
Forced Entry Operations H-4
Reception, Staging, Onward Movement, and Integration H-4
Postconflict Activities H-5

Appendix I **FIELD ARTILLERY COMMAND, CONTROL, AND COMMUNICATIONS STRUCTURE** I-1
Section I - System Descriptions I-1
Army Battle Command System I-1
Combat Net Radio System I-2
Area Common User System I-3
Army Data Distribution System I-4
Broadcast Systems I-4
Global Positioning System I-5

Fire Planning and Direction Systems....I-5
Section II - Corps Arty Communications Structure....I-7
Corps Arty Internal Networks....I-7
Corps Arty External Networks....I-8
Tactical Satellite....I-9
Wire Communications....I-9
Section III - Div Arty Communications Structure....I-9
Div Arty Communications Net Structure....I-10
Div Arty Internal Nets....I-10
Div Arty External Nets....I-12
TACSAT....I-12
Wire Communications....I-12
Div Arty Area Common User System....I-12
Section IV - FA Brigade Communications Structure....I-13
FA Brigade Internal Nets....I-13
FA Brigade External Nets....I-14
Wire Communications....I-14
FA Brigade Area Common User System....I-14

Appendix J **FIELD ARTILLERY TACTICAL AND DIGITAL REHEARSALS**....J-1
Field Artillery Tactical Rehearsals....J-1
Field Artillery Digital Rehearsals....J-3

Glossary **GLOSSARY**....Glossary-1

Bibliography **BIBLIOGRAPHY**....Bibliography-1

Index **INDEX**....Index-1

Preface

The purpose of this manual is to provide tactics, techniques, and procedures (TTP) for corps artilleries (corps artys), division artilleries (div artys), and field artillery (FA) brigades. It is intended as a general "how to" guide to assist in force standardization with sufficient flexibility to adapt to local conditions as reflected in unit tactical standing operating procedures (TSOP). A firm grasp of FA and fire support (FS) doctrine and TTP, tempered by experience and military skills, should be the basis for decisive and effective action.

This manual addresses TTP and the supporting infrastructure relevant to corps arty, div arty, and FA brigade operations in support of deep, close, and rear combat across the spectrum of full-dimensional operations. Included are:

- The integration, synchronization, and execution of FA missions in consonance with the force commander's concept of operations and scheme of FS. The manual also provides an overview of linkages to fire support elements (FSEs) and deep operations coordination cells (DOCCs).
- Internal FA command and control (C2) and sustainment operations.
- Support of joint/allied/multinational FS efforts and connectivity to higher-level sensors, intelligence sources, etc.

Field Manual (FM) 3-09.22 (6-20-2) provides TTP applicable to Army corps artys, div artys, and FA brigades equipped under the L-series tables of organization and equipment (TOEs) in 2000 and assigned to armored, mechanized, light infantry, airborne, and air assault divisions in active or reserve component formations. It also serves as an interface document for supporting or supported United States Marine Corps (USMC) artillery formations.

The proponent for this manual is the Commandant, United States Army Field Artillery School (USAFAS), ATTN: Director of Warfighting Integration and Development (ATSF-D), Fort Sill, OK 73503-5600.

Unless this publication states otherwise, masculine nouns and pronouns do not exclusively pertain to men.

Chapter 1

Field Artillery Mission, Roles, Capabilities, and Tasks

This chapter provides an overview of the FA as a principal contributing member of the combined arms and joint FS teams. With FM 6-20, *Doctrine for Fire Support*, FM 6-20-60, *Tactics, Techniques, and Procedures for Fire Support for Corps Operations* and 6-20-30, *Tactics, Techniques, and Procedures for Fire Support for Division Operations* addressing FS in detail (to be published), the FA commander's additional role as the force commander's fire support coordinator (FSCOORD) on corps, division, and maneuver brigade staffs is only briefly addressed in this and subsequent chapters. The same applies to differences in functions and responsibilities between force and field artillery command posts.

SECTION I - MISSION, ROLES, AND CAPABILITIES

FIELD ARTILLERY MISSION

1-1. The mission of the FA is to provide responsive lethal and nonlethal fires and to integrate and synchronize the effects of fires to achieve the supported commander's intent.

FIRE SUPPORT

1-2. FS is the collective and coordinated use of land- and sea-based indirect fires, target acquisition (TA), armed aircraft, and other lethal and nonlethal systems against ground targets in support of the force commander's concept of operations. Lethal FS consists of indirect fire weapons and armed aircraft to include FA, mortars, naval surface fires, and air-delivered munitions from fixed-wing and rotary-wing aircraft. Nonlethal means include electronic warfare (EW), psychological operations (PSYOP), offensive information operations (IO), and munitions such as illumination, smoke, and riot control agents. FS is most effective when its effects are massed. The four basic FS tasks, equally applicable to the FA, are:

Support Forces In Contact

1-3. Commanders must provide responsive indirect fires to protect and ensure freedom of maneuver for forces involved in decisive, shaping, and sustaining operations. The process by which this support is provided in all phases of war is discussed in FM 6-20, FM 6-20-60, and FM 6-20-30.

Support the Concept of Operations

1-4. Force commanders must retain direct control over sufficient firepower to influence the battle by attacking high-payoff targets (HPTs). The successful

attack of HPTs hinders the enemy from interfering with friendly operations or effectively developing his own operations. Of particular concern is the large-scale attack of counterfire targets and deep interdiction

Synchronize Fire Support

1-5. FS is synchronized among all relevant members of the Army's battlefield operating systems (BOS) and joint and allied assets. This synchronization is assisted by the decide, detect, deliver, and assess (D3A) targeting methodology discussed in further detail in Chapter 6. Successful use of this methodology helps attack the right target with the best weapon at the right time.

Sustain Fire Support Operations

1-6. FS planners must formulate FS plans to reflect logistic limitations and capabilities. The three imperatives for sustaining the FS system during all phases of war are protection, logistic support, and technical support. They are discussed in further detail in FM 6-20 and Chapter 5. FSCOORDs are responsible for identifying overall FS sustainment requirements and ensuring those necessary actions are taken to achieve the required level of support.

FIELD ARTILLERY SUPPORT

1-7. The FA, as an integral part of the FS system, is responsible for participating in the planning, preparation, and execution of lethal and nonlethal FA fires delivered by FA cannons, rockets, and missiles at the operational and tactical levels. This often includes simultaneous FA fires in support of decisive, shaping, and sustaining operations, including counterfires. Deep fires, beyond the boundaries of tactical operations under joint force control, may involve the delivery of operational-level fires directly supporting the joint force commander's (JFC) campaign plan. Such fires may have potential strategic implications as in the case of enemy attack with theater ballistic missiles carrying warheads armed with agents of mass destruction.

1-8. In addition, FA commanders at all levels are responsible for the internal sustainment of the FA system to include actions to safeguard the survival of the necessary logistic and technical combat service support (CSS) infrastructure to ensure continuous operations. Commanders must be fully aware of prevailing logistic limitations and capabilities and assign priorities in harmony with the schemes of fires and maneuver. Logistic sustainability is a central aspect in achieving operational and tactical success.

FIELD ARTILLERY ROLES

FA AS FORCE FA HEADQUARTERS

1-9. A command's organic FA headquarters (HQ) is normally the force FA HQ, (e.g., div artys). When formations do not have an organic FA HQ, the respective force commander may designate an FA HQ such as an FA brigade as force FA HQ. An example of this is an FA brigade in direct support of a maneuver brigade or armored cavalry regiment (ACR). The force FA HQ performs the following functions:

- Provides C2 for subordinate units.

- Recommends FA organization for combat for the force commander.
- Provides unity of command.
- Facilitates single point of contact for outside agency coordination for force protection and additional fires.
- Accepts or passes control of fires during passage of lines operations.
- Authorizes changes to approved or doctrinal net structures for nets it controls.
- Coordinates for sustainment of subordinate FA units.
- Plans fires and positions all FA units with a tactical mission of general support (GS)/ general support reinforcing (GSR) to the force.
- Orchestrates the counterfire battle for the force commander.

1-10. Designation as force FA HQ is not a tactical mission statement. However, when serving as force FA HQ, FA brigades have responsibilities for the organization for combat of subordinate units identical to those of a div arty.

ROLE OF FIRE SUPPORT COORDINATORS (FSCOORDS)

1-11. Commanders of combined arms and joint task forces are responsible for the overall control of the FS system. Their guidance is reflected in their scheme for fires, which must be synchronized with their schemes for maneuver and support. Effective control of FS is as critical as control of maneuver forces. To assist commanders with FS C2 and decision-making, FSCOORDs are delegated the authority to perform FS tasks in the name of their commander.

CORPS AND DIVISION ARTILLERIES

1-12. As their command's FSCOORD, corps arty and div arty commanders are responsible for planning, integrating, coordinating, synchronizing, and implementing all FS matters in support of their command's current and future operations. These FS responsibilities are normally performed by fire support cells (FSCs) or FSEs in corps and division main, tactical, and rear command posts (CPs) and DOCCs. The senior field artilleryman present supervises FSC/FSE/DOCC operations and represents the command's FA commander when absent. FSCOORDs assisted by FSE/DOCC personnel:

- Coordinate, integrate, and synchronize all indirect fires, lethal and nonlethal, in support of the force commander's intent and of forces in contact.
- Determine FS requirements by developing essential fires support tasks (EFSTs).
- Develop, disseminate, and implement the approved FS plan as part of the command's operation plans (OPLANs) and operation orders (OPORDs).
- Accommodate FS requirements through the allocation of corps and division FS assets, assignment of missions, and positioning of delivery, TA, and logistic assets.

- Advise force commanders on FS capabilities for committed maneuver units engaged in the current battle and expedite processing of immediate FS requests.
- Maintain the status of the command's available FS and TA means.

FIELD ARTILLERY BRIGADES

1-13. When assigned a direct support (DS) mission, FA brigade commanders become the supported maneuver command's senior FA officer and FSCOORD. The commander of the unit's maneuver DS battalion will normally become the assistant FSCOORD (AFSCOORD) and, in this role, significantly facilitate coordination with the supported maneuver element. Regardless of circumstances or mission assigned to an FA brigade, div arty commanders remain their division's FSCOORD. (See FM 6-20-30 for additional information on FS operations.)

ROLE AS SENIOR FA COMMANDER

1-14. Corps arty, div arty, and FA brigade commanders are responsible for the C2 of subordinate FA units. They execute their FA responsibilities with the help of a separate staff principally organized in tactical operations centers (TOCs) and administration and logistic operations centers (ALOCs). Dividing available time and emphasis among FS and FA responsibilities subject to mission, enemy, terrain and weather, troops and support available, time available, and civil considerations (METT-TC) requirements, the FA commander attends to his FA tasks to ensure the timely, effective, and efficient delivery of FA fires.

CAPABILITIES

1-15. FA, as a principal component of the Army's FS system, has repeatedly proven itself to be a highly effective and efficient agent for destroying enemy capabilities and the enemy's will to fight. The synchronized use of massed or selectively applied FA fires in support of simultaneous decisive, shaping, and sustaining operations is intended to weaken the enemy at all echelons and to deny him opportunities to hide and rest. Lethal and nonlethal fires can be used to isolate the battlefield and to compensate for limited maneuver forces in an economy-of-force role. In addition, FA contributes materially to force protection and survivability. It can achieve surprise with the instantaneous delivery of high volumes of fire without warning. As such, it becomes the most potent and responsive, 24-hour, all-weather combat multiplier available to force commanders.

DEEP OPERATIONS

1-16. Deep and simultaneous attacks, executed at increasingly longer range and with precision, are key elements for division, corps, and JFCs in shaping the battlespace and accelerating the enemy's defeat. In both offense and defense, deep operations are conducted to isolate, immobilize, and weaken the enemy in depth, using fire, maneuver, or a combination of the two. Deep offensive FA fires may be used to limit the enemy's ability to shift forces to meet attacking friendly maneuver forces and to sustain the momentum of the attack. Deep fires limit, delay, or disrupt the enemy's attacking echelons and FS, command, control, and communications (C3), and logistic infrastructure. They are

intended to reduce the enemy's rate of arrival in the close battle area to a level manageable by brigade and battalion task force commanders.

1-17. FA systems are fully capable of conducting deep precision strikes and massing fires under all weather conditions, day or night. They provide joint and land component commanders the capability to engage HPTs when and where required. Precision strikes are also important factors in stability operations where the threat of collateral damage is often of primary concern.

1-18. As part of deep operations, proactive TA and FA counterfires can silence threat indirect fire systems before they have a major influence on the battle. Similarly, deep attack can interdict or attrit enemy maneuver forces, surface-to-surface missile systems, and logistic units/facilities; alter combat power ratios; and limit an opponent's freedom of action while simultaneously enhancing friendly options and force protection. FA fires, either separately or as part of a joint air attack team (JAAT), assist in the suppression of enemy air defenses (SEAD).

CLOSE OPERATIONS

1-19. At corps and division levels, close operations during the offense or defense are undertaken to win the current battle or engagement. Close battle occurs where, when, and against whom commanders choose to commit assault forces. FA fires, in the form of preparations, counterpreparations, SEAD, programs of fires, etc., support friendly schemes of maneuver by assisting in denying the enemy favorable avenues of approach, helping maneuver forces control terrain, and defeating attacks as they are mounted. Although not taking place at the line of contact, counterfires silence enemy artillery and other indirect fire systems to preserve friendly fighting forces and combat capabilities. They give supported elements the freedom to maneuver, while smoke hides friendly movements and illumination exposes enemy formations at night. Close fires are normally the main concern of DS FA battalions whose fires in support of forces in contact may be augmented by fires from div arty and corps arty units. Commanders and planners must ensure that maneuver forces engaged in face-to-face engagements receive an appropriate share of available FS to include security forces and reserves upon commitment.

REAR OPERATIONS

1-20. Rear operations are conducted to ensure that friendly forces retain freedom of action to support combat forces engaged in deep and close operations. The focus is on protecting the most critical capabilities. FA assets are seldom sufficient to dedicate firing units to rear area support as their sole or primary mission. FA commanders, in the role as FSCOORD, may assign on-order missions to support corps or division rear area operations. They can also meet rear area FA support requirements by positioning GS and GSR cannon units to range rear areas while continuing to perform their primary missions in support of deep and close operations. However, if a tactical combat force (TCF) is designated, commanders will ensure it is supported with a commensurate size FA unit in DS. For additional details, see FM 6-20-30.

JOINT FIRE SUPPORT CAPABILITIES

1-21. Modern warfare and United States (US) strategic and operational considerations require US armed forces to fight as a joint team. To optimize the effects of firepower as an element of US combat power, the JFC establishes guidance for planning, prioritization of missions and targets, and the apportionment and allocation of joint FS resources. FA capabilities in support of joint operations consist principally of long-range Army tactical missile system (ATACMS) fires directed against operational objectives. They are closely integrated into the JFC's scheme of operations as part of the Army's overall FS contributions. Joint Pub 3-09, *Doctrine for Joint Fire Support*, and FM 6-20 provide the doctrine governing Army contributions to the joint effort.

ALLIED AND MULTINATIONAL INTEROPERABILITY

1-22. Although US forces must be prepared to fight and win any future conflict unilaterally, it is in the national interest to employ friendly combat power in concert with regional allies and partners. Many of the treaties and defense pacts to which the US is signatory provide for US forces to operate with those of other nations. Among principal US allies, mutual agreements have evolved over extended periods of time to facilitate the conduct of combined actions. For example, artillery operating procedures are specifically addressed by North Atlantic Treaty Organization (NATO) and quadripartite (Australia, Britain, Canada, America [ABCA]) standardization agreements (QSTAGs). The Combined Forces Command in Korea is also an example of a long-standing relationship fostering the development of shared contingency plans, compatible military systems, and common procedures.

1-23. In more temporary coalition environments, agreements on doctrine, tactical principles, and operating techniques may have to be worked out under the pressure of imminent conflict or after initiation of combat operations. In any case, FA units are expected to make the necessary adjustments to adapt themselves to coalition and multinational environments.

1-24. Since few potential coalition partners and allies are expected to match deep US attack capabilities, US forces will most likely have to shoulder the responsibility of providing the resources necessary to shape the deep battlespace for the force as a whole. See Appendix A for additional considerations for US FA "out-of-sector" missions in support of an allied division or corps and how to integrate allied support into US operations.

SECTION II - FIELD ARTILLERY ORGANIZATION FOR COMBAT

GENERAL

1-25. Successful execution of future battles will require careful planning of limited FA resources and the coordinated employment of acquisition and assessment means. FSCOORDs and fire support officers (FSOs)/FSEs on corps and division staffs normally ensure FS adequacy in support of force operations by varying the allocation and level of control over available FS resources to include FA formations. They establish command relationships and assign

standard or nonstandard tactical missions with input from corps arty and div arty G3s/S3s.

COMMAND RELATIONSHIPS

1-26. Artillery C2 relationships must be clearly established to set the conditions for successful task accomplishment. As operations progress, support requirements may shift and require changes in C2 relationships. FA units are integrated into the force structure of an operational command in accordance with one of the following four command relationships: organic, assigned, attached, or under the operational control (OPCON) of a maneuver command. See Appendix B for further details.

1-27. Deployed FA brigades normally remain assigned to their controlling corps arty HQ. However, force commanders, on the advice of their FSCOORD, may on rare occasions change command relationships based on special mission requirements. They may attach units or place them OPCON to subordinate maneuver commanders. These are the most decentralized methods of employing corps arty assets, giving subordinate maneuver commanders the authority to employ FA augmentations as deemed appropriate to support their mission.

1-28. Although attachment gives gaining maneuver commanders greater employment flexibility, it is also accompanied by increased logistic and administrative responsibilities. If attached to a division, an FA brigade is normally subattached to the div arty, placing all FA assets with the division under a single FA commander. Since div arty commanders have the authority to tailor divisional FA assets, they also may change the composition of battalions in the attached brigade(s).

FUNDAMENTALS

1-29. Fundamentals addressing FA organization for combat are shown at Appendix C. In coordination with force FSCs/FSEs, corps arty and div arty G3s/S3s recommend the organization for combat for all available FA units to their FSCOORD. When an FA brigade is the force artillery HQ, it may also recommend the FA organization for combat. These recommendations should be based on in-depth analysis of stated and implied FA tasks to support anticipated battles and engagements as they progress from deep attack into covering force and main battle areas. Plans should also include requirements for rear area battle support and security and reserve elements. Sufficient FS resources to include FA are normally retained under centralized control to concentrate fires at the decisive place and time. When approved by corps or division commanders, the FA organization for combat is established in the FS plan/annex of the force OPLAN/OPORD.

1-30. Standard and nonstandard tactical missions are discussed in Appendix D.

SECTION III - TASKS AND RESPONSIBILITIES

CORPS ARTILLERY

GENERAL

1-31. Corps arty commanders, in their FSCOORD role, control the command's FS system, ensuring that it supports the corps commander's guidance for fires, meets joint force requirements, and reacts responsively to changing battlefield conditions. Artillery fires in support of corps and echelons above corps (EAC) operations must be carefully integrated with other Army and joint FS elements and the Army's combined arms team.

PREPARATION AND EXECUTION OF THE CORPS FA SUPPORT PLAN

1-32. The application of FA fires is reflected in the FA support plan, which is normally prepared under the overall supervision of the corps arty G3 in the corps arty TOC. This is not a stand-alone document developed in isolation. Rather, the plan is developed in close coordination with the corps FSC/DOCC and other corps staff elements and becomes part of the FS Annex in the force OPLAN/OPORD. It is based on corps FSC/DOCC guidance directing the FA's organization for combat, unit positioning, essential field artillery tasks (EFATs), ammunition usage, target selection, targeting criteria, and related products. It incorporates corps intelligence preparation of the battlefield (IPB) products and other critical information developed at corps, higher, or adjacent HQ.

Corps Shaping Operations in the Deep Area

1-33. Corps shaping operations in the deep area are directed against enemy forces and other targets beyond the close battle to seize and sustain the initiative within the corps commander's area of operations (AO). They may consist of a combination of fires and maneuver or fires alone and are separated from the close battle in time or space or both. Effective use and integration of corps and higher-level intelligence, TA, and targeting assets are critical.

1-34. Corps arty deep attack systems may be tasked to destroy, neutralize, or suppress HPTs supporting the JFC's operational objectives. Examples of operational-level FS include joint suppression of enemy air defenses (JSEAD) to support deep attack helicopter, air assault, and airborne operations. In addition, FA fires may support deep maneuver operations, attack enemy centers of gravity, and execute attack operations as part of theater missile defense (TMD).

1-35. Corps shaping operations in support of the close battle are used to influence the enemy so that divisions can accomplish the piecemeal destruction of enemy forces. Alternatively or concurrently with joint FS (subject to resource availability), Corps arty units deliver long-range fires to shape the battlespace and support the corps commander's tactical scheme of maneuver and fires. Corps-level deep FA fires as part of the overall FS effort are intended to disrupt, divert, or destroy enemy centers of gravity and critical functions and capabilities including attack of uncommitted forces.

1-36. To ensure unity of effort and fully integrated use of capabilities in shaping operations, a single organization within the corps is doctrinally responsible for synchronizing all FS assets in consonance with the commander's guidance. This

organization is the DOCC, which interfaces with the corps FSC, and other Army, joint and allied FS agencies.

1-37. Responsibility for executing FA fires as part of the force FS plan rests with FA delivery units in consonance with FSC/DOCC guidance under the overall supervision of corps arty TOC and FA brigade personnel. The primary FA attack system currently available to strike operational targets in the deep area is ATACMS. FA rockets and cannons are principally directed at tactical-level deep targets in corps and division sectors, respectively.

CORPS-LEVEL FA COUNTERFIRE

1-38. Counterfire is a shaping operation that improves friendly force ratios, protects the force, and provides for successful maneuver. Counterfire is used to attack enemy indirect fire systems, observation units, C2 facilities, TA assets, and ammunition/logistics sites.

1-39. Corps commanders are responsible for counterfire throughout the depth of their AO. The corps commander, FSCOORD, and the FSC assess the corps counterfire threat as part of their FS responsibilities and determine the best way to protect the force using fires, maneuver, or both (for details see FM 6-20-60). These actions include an assessment of FA counterfire capabilities to include those in subordinate divisions.

1-40. By allocating corps assets, issuing attack guidance, and identifying corps HPTs, corps HQ influences how subordinate divisions fight their counterfire battle. Corps can shape a division's counterfire efforts by:

- Allocation of assets.
- Division of labor within the battlespace.
- Delineation of areas of operation.
- Prioritization of effort.

AUGMENTATION OF FIRES IN THE CLOSE AND REAR AREA

1-41. Corps decisive, shaping, and sustaining operations include battle in close and rear areas and engagements of its committed divisions, separate maneuver brigades, and cavalry regiments together with the combat support (CS) and CSS activities supporting them. Subject to METT-TC conditions, div arty attack capabilities are intended to be enhanced with augmentation of two FA brigades. Divisions may also nominate targets within divisional AOs for attack by corps arty assets after FSC approval and coordination with division FSEs. In all cases the division must approve all corps fire missions within its AO. Potential uses include:

- Counterfires to suppress enemy artillery.
- Massed preparations to create weak points or gaps in enemy defenses.
- SEAD.
- Counterpreparations to blunt enemy penetrations or counterattacks.
- Assisting maneuver commanders in the protection of flanks in a corps counterattack or spoiling attack.

1-42. FA fires against enemy formations in corps rear areas will normally require the repositioning of FA cannon units since most, if not all will be positioned to engage the enemy well forward. They may receive on-order (o/o) missions in support of units designated to meet Level II and Level III threats. Level II targets require FA support to local response forces and Level III threats call for FA support for a corps combined arms TCF. Pre-positioning of artillery in the corps rear solely to support the TCF may be a viable option. Also, FA units transiting the corps rear area or undergoing reconstitution may be tasked to provide such support. Close air support (CAS), weather permitting, is also a responsive FS means to support and respond to enemy actions in the rear area. Army aviation is another flexible and responsive means to support a friendly response to or independently respond to "hot spots" in the corps or division rear area.

RESPONSIBILITIES AS ALTERNATE CORPS OPERATIONS CENTER

1-43. If corps main CPs are destroyed or lose communications, corps arty CPs can assume responsibility for selective functions temporarily.

RESPONSIBILITIES IN SUPPORT OF OFFENSIVE AND DEFENSIVE NUCLEAR FIRES

1-44. Corps is the lowest level at which nuclear fire planning is conducted. Divisions are responsible for force protection and nuclear, biological, and chemical (NBC) defenses only, which include strike warnings and conducting vulnerability analyses.

1-45. Residual nuclear planning considerations are addressed in detail in FM 100-30, *Nuclear Operations*. FM 100-30 requires commanders and staffs at all levels to be familiar with nuclear weapons effects, actions required to minimize such effects on operations, and risks associated with nuclear weapons. Detailed information on how to operate successfully in an environment marked by biological, chemical, or radioactive contamination are found in FMs 25-50, *Corps and Division Nuclear Training* and 25-51, *Battalion Task Force Nuclear Training*.

1-46. Army responsibilities for integrating nuclear options into battlefield operations rest with the United States Army Nuclear and Chemical Agency (USANCA). They deploy mobile training teams to augment, train, and exercise with existing nuclear planning staffs. Additionally, artillery warrant officers and Army Chemical Corps officers are trained and certified to conduct nuclear target and effects analyses.

CHEMICAL WEAPONS OPERATIONS

1-47. The US signed the Chemical Weapons Convention on January 13, 1993, and thereby effectively renounced the use of chemical weapons for any reason including retaliation. To deter enemy use of chemical (or biological) weapons, military units must establish and maintain a strong defensive capability against such threats.

DIVISION ARTILLERY

GENERAL

1-48. The basic task for a div arty is to provide responsive indirect fires that protect and ensure freedom of maneuver to forces in contact with the enemy in division shaping, decisive and sustaining operations.

DIVISION FA SUPPORT PLAN

1-49. Div arty commanders and AFSCOORDs work closely with division G3s and G2s throughout the planning, preparation, and execution phases of an operation. The schemes of maneuver and of fire are developed at the same time based on the commander's intent. The FSE passes this information to the div arty TOC, which concentrates primarily on divisional counterfires, other shaping fires, and SEAD.

1-50. The division FA support plan implements corps and the division commander's attack guidance to include FA organization for combat, ammunition allocations, positioning instructions, and target selection criteria and designations. Similar to operations at corps, the completed FA support plan becomes part of the force FS plan in the force OPLAN/OPORD. When an FA brigade(s) has been attached to or is reinforcing a div arty, the FA brigade's firing elements are included in the div arty's FA support plan.

SUPPORT OF DIVISION SHAPING OPERATIONS

1-51. Divisional deep FA fires are interdiction fires that use targeting objectives to destroy, divert, delay, and disrupt uncommitted enemy forces before they can engage friendly forces or to support deep maneuver operations. This includes counterfires and the attack of air defense artillery (ADA) systems, TA systems, and enemy aircraft, and missiles on the ground. To accomplish this task and create favorable conditions for decisive operations, div artys are normally supported by at least two corps FA brigades to provide them with missile fires and additional rocket and cannon firepower.

Divisional Counterfire

1-52. Counterfire responsibilities of division commanders essentially mirror those of corps commanders. They are a major task for div arty commanders within boundaries established by corps. Successful prosecution of the divisional counterfire battle destroys, neutralizes, or suppresses hostile indirect fire systems in both offensive and defensive operations, thereby protecting friendly elements from the effects of enemy artillery fires. This, in turn, provides friendly maneuver forces with the necessary freedom of action and flexibility to prosecute the direct firefight relatively unencumbered by threat artillery fires. This is particularly critical for light units and any mechanized elements conducting dismounted operations, e.g., breech operations.

1-53. Since most threat FA systems are located in a division's AO, the preponderance of counterfire battles will take place within this area. Divisional organic FA counterfire assets are limited to the division (3x6) multiple launch rocket system (MLRS) battalion in heavy divisions supported by its organic target acquisition battery (TAB). One of the two FA brigades that will normally augment a div arty in an attached or reinforcing status may be given the

responsibility for planning and executing the division's counterfire battle. However, even in this case, the div arty commander as division FSCOORD retains overall responsibility for orchestrating the division's counterfire effort.

Support of Decisive Operations

1-54. The delivery of FA fires against enemy formations in contact is primarily the responsibility of DS artillery battalions as an integral part of the combined arms team at brigade/battalion task force and company team level. If these capabilities are insufficient, DS artillery may be augmented with fires from div arty or FA brigade units. In addition, close combat operations can be materially supported through counterfires and deep FA interdiction fires as noted above.

Support of Rear Area Battles

1-55. Fires in the rear area are coordinated and cleared by FSEs in rear area CPs. FA support will normally consist of cannon units that have been positioned within range of priority protection points or units with an o/o mission such as a DS o/o mission to support a TCF. Their primary employment will be against Level III threats, requiring commitment of a designated TCF. The use of air assault artillery in this role facilitates rear area coverage and decreases response times, especially if relocation distances are significant. Although Army aviation or Air Force CAS including AC-130H gunships may be the more mobile and responsive FS assets, FA firing units and maneuver force mortars are not as restricted by adverse weather or low visibility conditions at night.

Responsibilities as Alternate Division TOC

1-56. Similar to corps arty TOCs, div arty TOCs have the necessary infrastructure, supporting communications, and situational awareness to assume responsibility for selective division TOC functions for limited periods.

FIELD ARTILLERY BRIGADES

SUPPORT OF CORPS OPERATIONS

1-57. FA brigades retained under corps control provide the MLRS and cannon systems to attack corps HPTs. As determined by joint and corps FSC/DOCC/targeting elements, these fires may be directed against critical facilities, installations, or troop formations such as counterfire targets, air defense, and TMD nodes.

SUPPORT OF DIVISION OPERATIONS

1-58. Divisional assets available for engaging division HPTs within sector beyond the close battle are limited. Each division is normally reinforced by at least two FA brigades to provide additional fires in the division battlespace. An appropriate mission is for the divisions to assign the responsibility for coordinating and executing the counterfire battle to one of the reinforcing FA brigades. The division must augment that FA brigade HQ with acquisition and processing assets in the form of Firefinder radars and div arty target processing personnel. This allows div arty's FA, using organic assets and the remaining attached or reinforcing FA brigade, to focus on attacking other deep targets or supporting the close battle. Assignment of the divisional counterfire mission

should receive prior corps arty concurrence to ensure availability of the FA brigade to perform the counterfire role for the duration of the operation. The FA brigade may also be provided target processing augmentation from the corps arty.

SUPPORT OF DECISIVE OPERATIONS

1-59. FA brigades may be tasked to support division decisive operations when given a reinforcing (R) tactical mission to a div arty or when assigned a DS tactical mission or attached to a brigade-sized maneuver element. Assigning two FA brigades in support of a committed division gives the force commander the flexibility to assign one of the FA brigades the counterfire mission, while using the other FA brigade to augment the fires of the div arty in the close area.

SUPPORT OF REAR AREA OPERATIONS

1-60. Unless specifically assigned the mission to support a rear area maneuver force, FA brigade elements may be positioned so that they support rear area operations while performing their primary mission in support of the corps or division close and deep battle.

RESPONSIBILITIES AS ALTERNATE CORPS ARTY/DIV ARTY COMMAND POST

1-61. FA brigades can, for limited periods of time, perform the functions as alternate corps arty or div arty TOC as in the case of div arty displacements. In preparation, FA brigades must track current situations and prepare to assume control over all FA assets and execute corps/div arty-planning functions. This could be a viable role for an FA brigade headquarters not assigned the counterfire mission.

US MARINE CORPS ARTILLERY REGIMENT

GENERAL

1-62. The basic task of a Marine artillery regiment is to provide close, continuous, and responsive artillery fires that protect and ensure the freedom of maneuver to forces in contact with the enemy in deep, close, and rear operations.

ARTILLERY FIRE PLAN

1-63. Regimental commanders and division assistant fire support coordinators (AFSCs) work closely with division G3s throughout the planning, preparation, and execution processes of an operation. The scheme of maneuver and the plan of fires are developed at the same time based on the commander's intent. The fire support coordination center (FSCC) passes this information to the regimental combat operations center (COC), which concentrates primarily on divisional counterfires, deep fires, and SEAD.

1-64. The artillery fire plan implements division FSCC guidance, task organizations, positioning instructions, and target selection criteria and designations. The completed artillery fire plan becomes part of the division FS plan in the division's plan/OPORD. When additional artillery units are attached to or reinforcing a regiment, they are included in the artillery fire plan.

DIVISION DEEP BATTLE

1-65. Divisional deep artillery fires are interdiction fires intended to disrupt, delay, and destroy uncommitted enemy forces before they can engage friendly forces. This includes attack of enemy CPs, ADA, and missiles. To accomplish this task and create favorable conditions for the close battle, a regiment may be reinforced by additional cannon artillery from other artillery regiments and/or rocket/missile artillery provided by the Army.

DIVISION COUNTERFIRES

1-66. Counterfire activities include the targeting and attack of enemy indirect fire weapons, associated equipment, and observers. Counterfire is a major task for the artillery regiment within boundaries established by the Marine air-ground task force (MAGTF) commander. Successful prosecution of the divisional counterfire battle destroys, neutralizes, or suppresses hostile indirect fire weapons in both offensive and defensive operations. This both protects friendly forces from enemy indirect fire and provides friendly forces with the necessary freedom of action to engage the enemy.

1-67. The regiment maintains organic TA and target processing assets; however, organic artillery counterfire assets are essentially nonexistent. The artillery regiment requires additional attached or reinforcing artillery to meet its close support and deep support responsibilities. MLRS units from the Army may reinforce or be OPCON to a regiment to provide counterfires.

SUPPORT OF THE CLOSE BATTLE

1-68. The delivery of artillery fires in support of forces in contact with the enemy is primarily the responsibility of DS artillery battalions. If the DS artillery battalion's capabilities are insufficient, its fires may be reinforced with fires from other artillery units within the regiment.

SUPPORT OF REAR AREA BATTLES

1-69. Fires in the rear area are coordinated by FSCCs in rear area CPs. Units that have been positioned within range of critical installations or unit concentrations will normally provide artillery support. Scarce artillery resources rarely permit units to be dedicated to rear area FS.

SUPPORT FOR AMPHIBIOUS OPERATIONS

1-70. The entire artillery regiment is rarely deployed as part of an amphibious force. Normally, individual firing batteries are attached to a Marine expeditionary unit (MEU) for amphibious operations. Larger operations will involve the deployment of Marines to meet equipment aboard maritime prepositioned shipping. If the conflict requires the commitment of a Marine division, upon its arrival in theater, the artillery regiment will assume control of all artillery in the division sector.

RESPONSIBILITIES AS ALTERNATE DIVISION COMBAT OPERATIONS CENTER

1-71. A regimental COC with personnel and/or equipment augmentation may be used as the alternate division COC for a limited period of time.

Chapter 2

Organizations and Systems Capabilities and Limitations

This chapter provides an overview of assets available to FA commanders for the delivery of timely and accurate FA fires within the context of missions, roles, and responsibilities described in Chapter 1. It starts with an organizational overview of corps, division, and brigade artilleries. The chapter closes with an overview of intelligence and TA systems. Supporting C3 systems are addressed separately in Appendix I.

SECTION I - FIELD ARTILLERY ORGANIZATIONS

2-1. The headquarters and headquarters battery (HHB) is the organization that provides corps arty, div arty, and FA brigade commanders the necessary C2 and sustainment infrastructure to accomplish their FS and FA missions. The actual firepower is found in FA cannon and MLRS battalions and supporting survey, TA, and meteorology units.

CORPS ARTILLERY

2-2. Corps arty plans, coordinates, and executes corps FA operations and provides C2 over subordinate FA brigades. As indicated in Figure 2-1, a typical corps arty consists of an HHB (Section I, Appendix E), FA brigades, and TA assets. The number of deployed FA brigades is based on theater requirements: normally one or two remain under corps control to provide GS fires with others augmenting the fires of committed subordinate divisions; two augment the fires of each committed subordinate division.

2-3. Corps arty normally retains all ATACMS missiles and some multiple rocket units for increased flexibility and responsiveness in support of the corps deep battle and counterfire operations. AN/TPQ-37 radars in the TA detachment may also be retained at corps for maximum centralized support, mission tailored and attached to FA brigades for counterfire or TMD operations, or attached to MLRS battalions to establish a direct sensor-to-shooter linkage (for details on specific capabilities see FM 6-121, *Tactics, Techniques, and Procedures for Field Artillery Target Acquisition*).

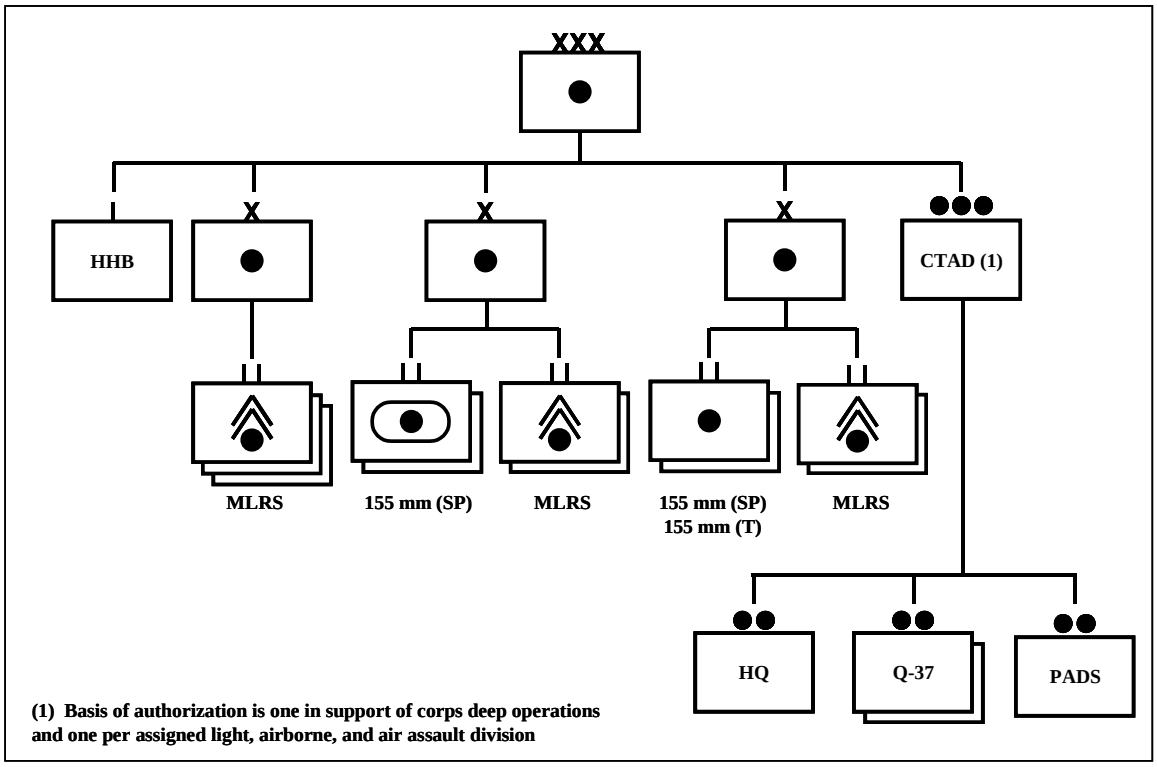

Figure 2-1. Notional Corps Arty Organization

DIVISION ARTILLERY

GENERAL

2-4. Div arty controls the division's organic and attached FA units and indirect FS operations, providing an FSE for continuous operations to division main, tactical, and rear CPs. To win a major theater war quickly, decisively, and with minimum friendly casualties, each division must be supported with the fires of two fully modernized FA brigades equipped with cannons and MLRS launchers.

2-5. The div arty HHB provides the personnel, equipment, and logistic support for div arty CPs and division FSEs. Individual differences among heavy, light infantry, airborne, and air assault div arty HHBs are as indicated in Section II, Appendix E.

ARMORED AND MECHANIZED INFANTRY DIVISION ARTILLERY

2-6. Each armored and mechanized infantry div arty is organized with an HHB and three 155mm SP howitzer battalions (three six-gun howitzer batteries - one battalion in DS of each committed maneuver brigade). In addition, a 3X6 division MLRS battalion with an organic TAB provides fires for the division (Figure 2-2). One AN/TPQ-36 radar section from the TAB is normally attached to each DS battalion supporting a committed brigade. The remainders to include AN/TPQ-37 radars are usually retained in GS of the division. For detailed information on TAB operations see FM 6-121.

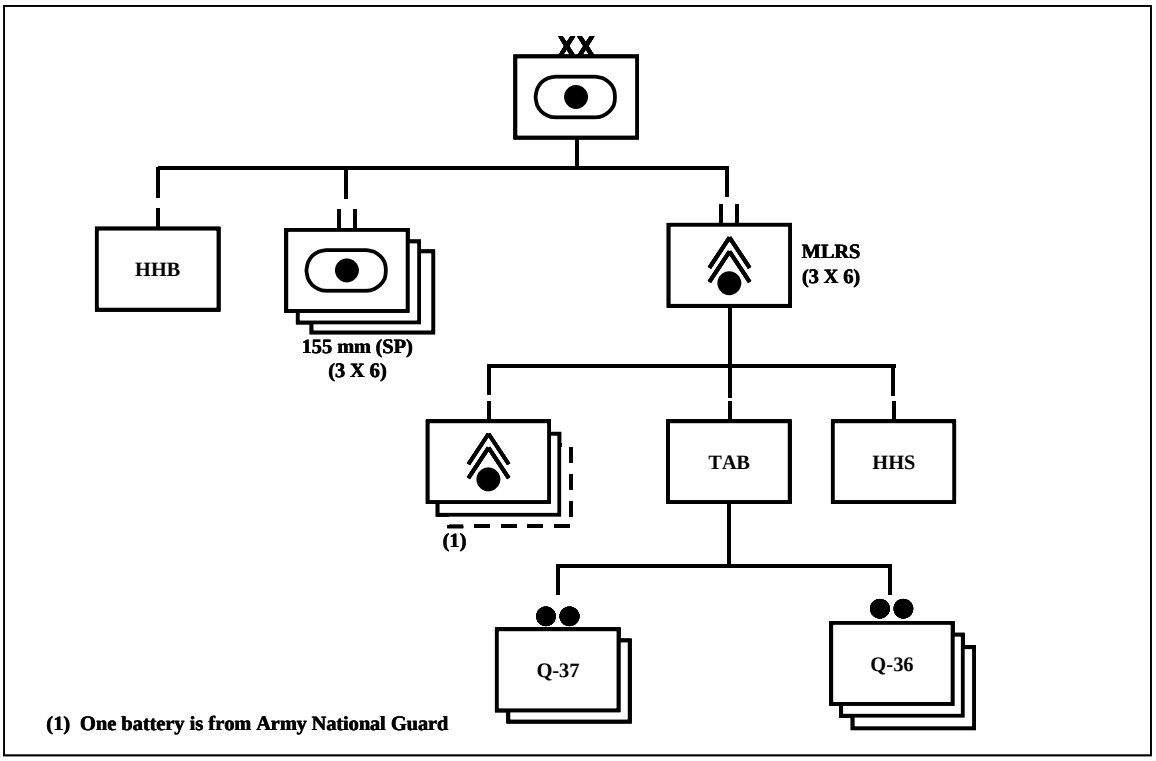

Figure 2-2. Heavy Div Arty Organization

LIGHT DIVISION ARTILLERY

2-7. Light infantry, air assault, and airborne infantry divisions are designed to make optimum use of offensive, decentralized, irregular-type operations by highly trained small units. Although their method of initial deployment and employment requires specialized skills, the organization of organic FA units is similar. However, for deployment purposes, the Army considers the air assault division a “heavy” division.

2-8. In contrast to heavy div artys, light div artys are more austere in terms of manning, equipment and logistic support. As indicated in Section II, Appendix E, the major differences with heavy div artys in HHBs are the absence of liaison and ambulance sections, the wire team, and cavalry troop fire support teams (FISTs). Also, as indicated in Figure 2-3, organic howitzers supporting divisional maneuver brigades are limited to three DS 105mm towed (T) howitzer battalions. Although light infantry divisions are supported by an organic six-gun 155mm towed howitzer battery, airborne and air assault div artys have to depend on reinforcing fires from supporting corps FA brigades and battalions. An additional significant difference with heavy divisions is the absence of an organic TAB. This limitation is partially overcome by one AN/TPQ-36 radar organic to each DS battalion and a two-section AN/TPQ-37 corps target acquisition detachment (CTAD) attached by corps to each committed light, airborne, or airmobile division.

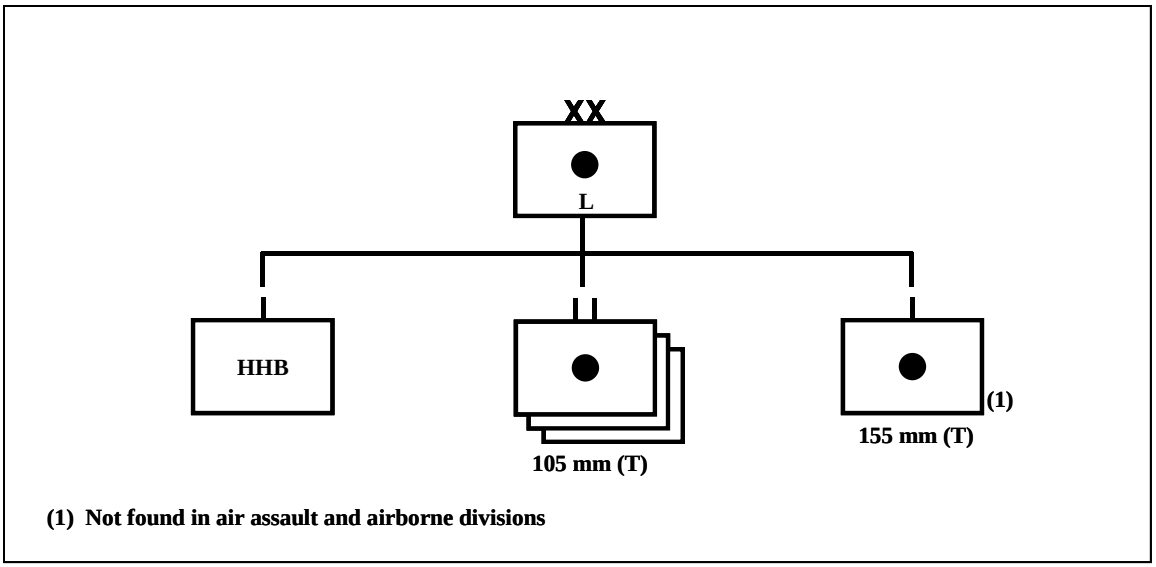

Figure 2-3. Light Div Arty Organization

2-9. FA operations in nonheavy divisions may also be challenged by a number of unique requirements and limitations. For example, in the case of the air assault division, aviation brigades are employed in high tempo, conventional offensive operations capitalizing on vertical envelopment. They habitually operate beyond the range of their DS tube artillery, unless accompanied by them. To employ FA cannon fires, FA batteries are required to join maneuver elements in air assault operations into or adjacent to maneuver unit landing zones. Also:

- Reinforcing SP tube and missile units cannot accompany air assault operations.
- Air assault operations and deep aviation attacks in the deep area consume large quantities of ammunition to suppress, neutralize, and destroy enemy air defenses, FS, and mobile reserves.

FIELD ARTILLERY BRIGADE

2-10. The FA brigade HHB (Section III, Appendix E) provides the C2 and CSS infrastructure to fight three to five attached FA cannon or MLRS battalions. It is a highly flexible, intermediate C2 structure, capable of changing task organization. Brigades are tailored prior to deployment to meet initial theater requirements. After arrival in theater, the type and caliber of assigned battalions can be tailored based on mission, number of units available and corps FA support requirements, which frequently change with the tactical situation.

2-11. An example FA brigade organization in support of a heavy division is shown in Figure 2-4. Although similar in size and structure to div artys, FA brigades have no permanent command relationship with a maneuver HQ. Unlike div artys, FA brigades may be routinely assigned any of the four standard FA tactical missions. However, FSEs and FISTs are not organic to FA brigades. When FA brigades or their subordinate battalions are assigned a DS tactical mission, they have to be provided augmentation. This augmentation

may come from the supporting maneuver unit's DS battalion. FA brigades also have to rely on corps or divisions for TA assets unless task-organized with corps arty TA assets. They also depend on logistical support from corps and/or divisional support elements on an area support basis.

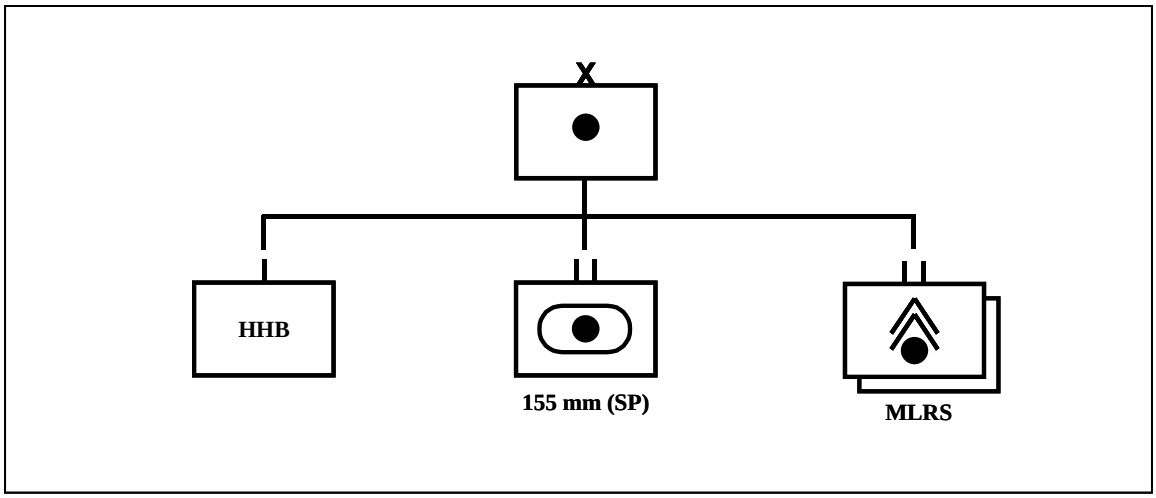

Figure 2-4. Notional FA Brigade Organization

US MARINE CORPS ARTILLERY REGIMENT

2-12. Each Marine division has an organic artillery regiment. The regiment and its subordinate elements are capable of deploying with and supporting the ground combat element (GCE) of any size MAGTF. For combat, the artillery regiment will have a HQ battery and five artillery battalions (three six-gun towed 155mm howitzer batteries) to support the GCE of a Marine expeditionary force (MEF) (Figure 2-5). Within the HQ battery, the counterbattery radar platoon consists of four AN/TPQ-36 radar sections. One radar section is normally attached to each DS battalion supporting a committed infantry regiment. The remainder is retained in GS of the division.

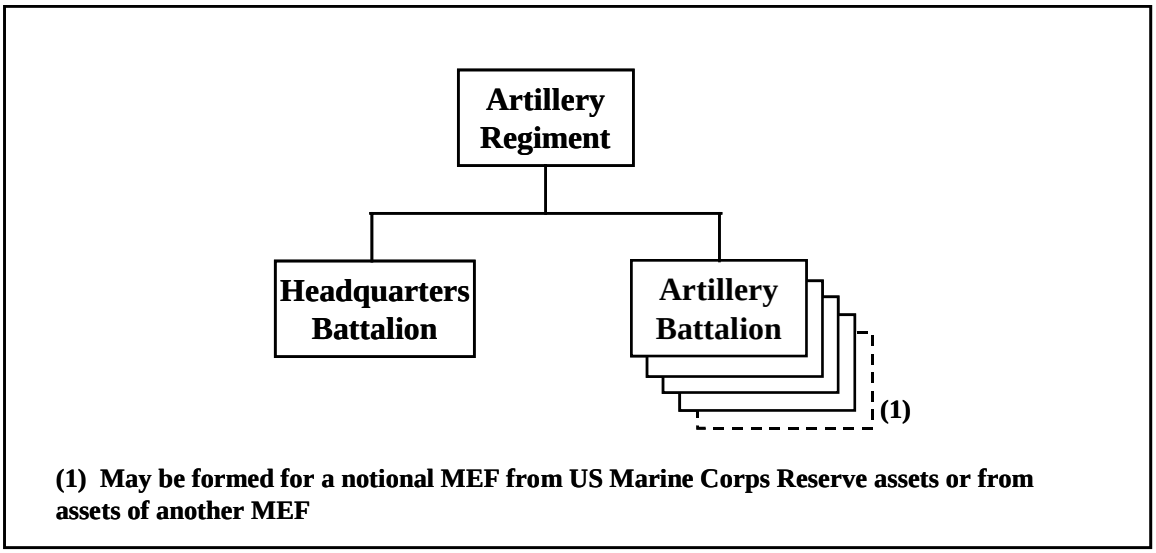

Figure 2-5. USMC Artillery Regiment

2-13. The regimental HQ battery has functional staff groupings to assist the regimental commander in the control of operations, CSS, and administrative support of the regiment (Section IV, Appendix E). The HQ battery provides the equipment and personnel for the regiment command echelons and the division FSCC. Personnel and sections of the HQ battery also may be employed to reinforce an artillery battalion operating independently of the regiment. The regimental HQ may be employed in two echelons: a main echelon, which has the necessary staff and equipment to direct tactical operations; and the rear echelon, which has the necessary staff and equipment to direct sustainment operations. A forward echelon may be formed from the staff and equipment of the main echelon to facilitate the incremental displacement of the main echelon. COCs are formed at each echelon to plan, direct, control, and coordinate assigned functions. The regimental COC performs tactical fire direction, targeting, and counterfire functions. The regimental commander positions himself where he can best exercise C2 of the regiment and function as the division artillery officer and fire support coordinator (FSC) (USMC). The regimental CP is that echelon where the commander is located.

SECTION II - INTELLIGENCE AND TARGET ACQUISITION SYSTEMS

GENERAL

2-14. Success in battle relies heavily on the ability to accurately identify, locate, and attack critical targets. This calls for rapid and accurate target development, TA, and poststrike assessments. The following systems, supported by advanced sensors and processors, provide the foundation for the delivery of timely and effective FA fires in support of the close and rear battle and deep strikes.

INTELLIGENCE FORCE STRUCTURE

2-15. Corps military intelligence (MI) brigades integrate intelligence collected by organic MI assets and theater and national level assets to support the corps deep battle. They also draw on other theater, coalition, and national sources. MI battalions at division level provide processing, imagery, and signals and human intelligence (SIGINT/HUMINT) capabilities in support of div arty FA and brigade operations. Intelligence and analysis operations at corps and division have been concentrated in a single hub, the analysis and control element (ACE). The ACE, equipped with ASAS, streamlines collection management, processing, analysis, and fusion functions.

2-16. The collection, processing and dissemination of intelligence information supporting corps arty, div arty, and FA brigade operations are the responsibility of the respective G2s/S2s. Most intelligence and targeting sources and assets, except for FA-internal sources and AN/TPQ-36/Q-37 radars, are under the purview of external commands and agencies; therefore, successful performance of FA intelligence functions depends greatly on the field artillery intelligence officer's (FAIO's) ability to provide effective interface with higher, lower, adjacent, and lateral G2/S2 elements for situation development and target attack. See FM 6-121 for more detailed duties of the FAIO. In the case of corps arty, this includes a consistent dialogue with the corps G2/ACE; FA intelligence representatives in corps main, tactical, and rear CPs; div arty and FA brigade S2s; and counterparts in the aviation brigade and ACR. To engage targets selected for attack by force commanders, FA units must also have rapid access to sensors that detect, identify, and locate targets to the required accuracy. Trigger sensors such as unmanned aerial vehicles (UAVs), joint surveillance and target attack radar system (JSTARS), scouts, reconnaissance helicopters, radars, and special operations forces (SOF), are linked through broadcast intelligence nets, ground station modules (GSMs), and common ground stations (CGSs) to shooters to meet the commander's targeting needs.

2-17. Army attack helicopters, air cavalry units, long-range reconnaissance patrols, and SOF can also acquire targets visually and electronically, call for indirect fires, and perform battle damage assessments (BDAs).

CORPS ARTY AND DIV ARTY TARGET ACQUISITION ASSETS

GENERAL

2-18. FA TA assets under corps and division control consist of weapons-locating radars (WLRs), FISTs, and combat observation/lasing teams (COLTs). FISTs, Strikers, and COLTs are considered primarily FS assets under the control of battalion, brigade, and sometimes division FSEs. Corps arty and div arty HQ only control Firefinder WLRs focused on the counterfire role. Other targeting information critical for the engagement of target arrays developed by corps and division FSCs/FSEs is available through a series of digital and voice communications interfaces (other corps intelligence and operations elements, particularly the ACE, FSC/FSE, and GSMs). The integration of corps arty and div arty into the joint and Army all-source-targeting infrastructure is described in FM 6-20-10, *Tactics, Techniques, and Procedures for the Targeting Process*.

2-19. The primary mission of the AN/TPQ-36 and AN/TPQ-37 WLRs is to detect and locate enemy mortars, artillery, rockets and missiles quickly and with

sufficient accuracy to permit immediate engagement. Their secondary mission is to observe registrations and to help fire direction centers (FDCs) adjust fires. For detailed information on characteristics and employment considerations see FM 6-121.

2-20. As indicated in Section I, corps artys in corps with non-mechanized infantry divisions have one CTAD per airborne, air assault, or light division. These CTADs are equipped with two AN/TPQ-37s, one position and azimuth determining system (PADS) team and one target-processing section. CTADs are normally attached to this division to permit TA to the limit of the division commander's AO and to provide a viable target-processing capability in div arty CPs.

2-21. There are three AN/TPQ-36 mortar-locating radars and two AN/TPQ-37 artillery-locating radars in heavy division TABs. In light infantry divisions, one AN/TPQ-36 radar is organic to each DS FA battalion and two AN/TPQ-37 radars may be attached from the CTAD. FA brigades may be augmented with TA means as required.

AN/TPQ-37 ENHANCED FIREFINDER

2-22. The primary mission of the enhanced AN/TPQ-37 is to locate low-trajectory indirect fire weapons such as rockets and cannon artillery over a range band from 3-50 kilometer (km). It can also be used to locate mortars. The high-mobility, multipurpose wheeled vehicle (HMMWV)-based Enhanced Firefinder incorporates a series of major modifications to include C130/C141 aircraft roll-on/roll-off (RO/RO) capability without special loading equipment, the modular azimuth and positioning system (MAPS), false location reduction, cooling system upgrades, trailer upgrades, longer target detection ranges, and survivability enhancements.

AN/TPQ-36 MORTAR LOCATING RADAR

2-23. The AN/TPQ-36 is the smaller of the two radars, optimized to locate shorter-range, high-angle, lower-velocity weapons such as mortars and shorter-range artillery to a range of 12 km and rockets to 24 km. It has a 6,400 mil search capability in the extended azimuth search function.

Chapter 3

Field Artillery Tactics and Techniques

This chapter provides an overview of field artillery tactics and techniques in the offense and defense and a host of collateral and other associated operations. It is intended to be descriptive, not prescriptive, in nature and to complement FS equivalents in FM 6-20-30 and FM 6-20-60. As a primary contributor to combat power on the tactical and operational battlefields, FA operations must be synchronized with actions by the combined arms team at all levels. Therefore, artillerymen are expected to have a firm grasp of the principles governing maneuver operations as found in relevant Army capstone and applicable corps- and division-level manuals. For a detailed discussion of combined arms considerations refer to FM 100-5, *Operations*, FM 100-15, *Corps Operations*, and FM 71-100, *Division Operations*.

SECTION I - FA FIRES IN SUPPORT OF OFFENSIVE COMBAT OPERATIONS

GENERAL

3-1. The offense is the decisive form of war, massing overwhelming combat power at the point of attack while avoiding the enemy's main strength. Surprise, concentration, tempo, and audacity characterize offensive operations. The intent is to gain and maintain the initiative and to defeat, destroy, or neutralize the enemy.

3-2. The objective is to destroy the coherence of the enemy's defense, to fragment and isolate enemy units in the zone of attack, and to secure operationally decisive objectives. The preferred method is to find and attack the enemy at a distance with lethal and nonlethal fires while remaining outside the range of threat systems. Deep attacks precede and/or accompany offensive operations. Artillery fires, with delivery systems positioned well forward, are ideally suited to meet the characteristics of the offense. Such fires can be rapidly shifted and massed to strike the enemy with surprise from any direction at any time under any weather conditions.

EMPLOYMENT OF OFFENSIVE FA FIRES

GENERAL

3-3. FA fires must be responsive and timely in a rapidly moving and often uncertain situation to help achieve and sustain the initiative. FA provides friendly formations with a force multiplier to enhance force survivability, fix enemy forces, and secure flanks. Supporting FA elements should never be out of range of advancing maneuver formations. FA fires may also be used to neutralize and fix bypassed pockets of resistance until follow-on friendly forces can deal with them.

3-4. Initial priority of FA fires is established by the maneuver commander in coordination with the FSCOORD, based on prevailing METT-TC conditions. As operations progress, the priority for offensive FA fires may shift. For example, after firing preparations, priority of fires may shift to divisional cavalry squadrons, using quickfire channels with FA brigades for quick response. If a passage of lines is required, necessary arrangements and fire control measures must be preplanned.

DELIBERATE ATTACKS

3-5. Offensive FA fires may include intense and concentrated preparatory fires before and during the initial stages to weaken and create gaps in enemy defenses and to limit the enemy's ability to react to the attacking force. Planners must consider both the benefits and drawbacks of preparatory fires. Considerations include loss of surprise, ammunition expenditures, counterfire threats, and the number and significance of targets to be engaged.

3-6. Attacks should be supported with all available FA fires to assist fixing enemy forces away from the penetration and prevent or delay the arrival of enemy reinforcements. Scatterable mines (SCATMINEs) may be emplaced to delay and disrupt the enemy or serve as an immediate hasty obstacle against threats to the flanks. As maneuver forces cross the line of contact/line of departure (LC/LD) in an attack, accompanying artillery units must anticipate potential enemy actions and support the moving force with timely and accurate fires. In addition, offensive-covering forces should be assisted with supporting fires. Offensive FA fires are generally planned to:

- Ensure availability of immediate, responsive fires with initial priority to lead elements.
- Prevent decisive engagement or support decisive engagement when unavoidable.
- Assist in blocking enemy approaches and in terrain denial.
- Allow freedom of movement by using suppression, screening (smoke), and illumination fires. Potential targets include known or suspected enemy locations and likely engagement areas where contact is expected. In the absence of known, suspected, or likely enemy locations, targets are planned along the route of march.

3-7. During an actual attack, suppressive fires should isolate the objective of the main attack and help fix enemy forces during supporting attacks and deception operations. In addition, these fires:

- Soften the objective during attacks, exploitations, and pursuits and suppress the enemy to allow attacking formations to close with the enemy. As the objective is taken, focus GS/GSR artillery on targets away from the objective to interdict enemy reinforcements and escape routes and assist in destroying pockets of resistance. Also, use indirect FA fires during exploitations and pursuits to sustain friendly force forward momentum.
- Fire special artillery programs with FA units not in the immediate close area fight (e.g., SEAD, JSEAD) and deliver counterfires to diminish the enemy's ability to employ his artillery effectively.
- Destroy enemy C2 and prevent the escape of retreating elements.

- Execute corps shaping operations in concert with other corps assets against uncommitted enemy forces, lines of communication (LOCs), etc.

HASTY ATTACKS

3-8. The possibility of a hasty attack should be anticipated and the necessary preparations put in place. Hasty attacks are normally launched with fragmentary orders (FRAGOs), using forces and CSS stocks on hand. As the decision is made to conduct a hasty attack, reinforcing FA brigades to the rear of the advance guard should go into firing positions as close as possible to the lead brigade. As in the deliberate attack, fires should help fix the enemy and provide counterfires and long-range fires to delay enemy reinforcements. Priority is initially given to the covering force and then shifts to the main battle area with the objective of destroying the enemy's forward direct and indirect fire capabilities. Just before the attack, fires are massed on enemy positions on the objective and, on order, shifted to enemy rear positions during the final assault.

SEARCH AND ATTACK OPERATIONS

3-9. Search and attack operations are normally conducted in an environment of friendly air and fire superiority against squad and company-sized enemy forces equipped only with small arms and mortars.

3-10. FA fires are delivered by DS artillery units from FS bases within brigade AOs and supported, as required, by corps arty units for additional coverage and range. Bases should provide complete coverage of the AO and be mutually supporting. Establishment of such firebases may often require the insertion of FA assets and resupplies by helicopter.

RAIDS

3-11. Division and smaller-sized maneuver units normally conduct raids to seize and destroy critical assets or decisive points. Whenever possible, these units should be supported by FA fires.

3-12. Artillery raids may be executed as aggressive, short duration operations against high priority targets. Likely candidates are enemy CPs, air defense (AD) radars, ammunition and fuel dumps, or unprotected troop concentrations. The key consideration is subjecting vulnerable enemy units and facilities to intense artillery fires throughout the engagement area.

3-13. For example, displacing FA forward by air with enough and correct ammunition allows the air assault division to extend the range of its howitzers and to engage enemy targets with artillery to the maximum range of division aviation assets. Such artillery raids require extensive training and precision execution to achieve split-second timing and to reduce risks to the artillery and supporting assault helicopters. Artillery raids work best when they are not vulnerable to threat ADA, land unopposed, and leave before hostile forces react and make contact. Airmobile FA battalions normally plan and coordinate raids in battery strength. Habitual battery attachments include man-portable air defense system (MANPADS) Stinger teams, pathfinders, and attached infantry for security. Observers should also be available aloft or on the ground to adjust fires.

FA ORGANIZATION FOR COMBAT

FA IN SUPPORT OF OFFENSIVE OPERATIONS

3-14. The allocation and synchronization of FA fires in support of the corps' main effort help control the tempo of offensive operations. Two of the five fundamentals for organizing FA units for combat (Appendix C) have particular relevance during offensive operations:

Weight the Main Attack

3-15. Maneuver commanders normally commit the majority of available FA assets to support the main attack. Assigning R or GSR tactical missions to augment the fires of artillery units in direct support of the attacking force accomplish this. For example, when infantry divisions conduct deep operations, corps normally reinforces the limited capabilities of their organic weapons. Maneuver commanders in coordination with the FSCOORDs can also weight the main attack by positioning additional FA units within sector and increasing ammunition allocations. For example, in a movement to contact, a corps MLRS battalion may be positioned behind or with the lead division to provide coverage from the LD.

Maximum Feasible Centralized Control

3-16. In offensive situations, centralized control over FA assets can be reduced because supported forces are presumed to have the initiative. To maintain the momentum of attack and to assist in the retention of the initiative, force commanders may grant subordinate FA commanders wider latitude through a more liberal assignment of DS and R missions. However, in such cases, force commanders relinquish first priority on calls for fire, fire planning and, normally, positioning authority.

FA IN SUPPORT OF SECURITY FORCES

3-17. Security forces operate to the front, flanks, and rear to protect the main body from observation and surprise attack. Often operating at extended distances from the main body, they must be self-contained and task-organized with the necessary combat, CS, and CSS assets to fight independently or semi-independently. The limited number of maneuver units normally available for flank and rear security forces and large areas of coverage (especially in case of screening forces) further increases the need for very responsive FS. Priority of FA fires to the advance guard during a movement to contact also facilitates transition to a hasty defense or attack.

3-18. Each maneuver brigade in a covering force normally has one artillery DS battalion, with corps arty FA battalions and divisional cannon and MLRS units in GS. If the mission places security forces beyond the range of FA delivery systems supporting the main force, the requirement is normally met by attaching FA units to security elements or by augmenting organic or habitually associated DS FA formations. If possible, a mixture of FA calibers helps deceive the enemy as to the composition of the force. If sufficient artillery is available, a DS FA battalion should support each maneuver battalion in a covering force.

3-19. As a prelude to an attack when the enemy's disposition is unknown, a division-sized reconnaissance in force may attempt to find enemy strong points

and weaknesses. The division should be supported by its organic FA, one or two FA brigades, and may receive GSR fires from the on-line defending division.

FA IN SUPPORT OF EXPLOITATIONS AND PURSUITS

3-20. Corps FA brigade elements positioned and moving behind a division's lead brigade may reinforce the division's organic FA to neutralize, fix, or destroy pockets of resistance prior to direct fire engagements.

AIR ASSAULT OPERATIONS AND ARTILLERY RAIDS

3-21. Tailored div arty assets and normally one corps FA brigade support division air assault operations. The division generally receives priority of corps fires when executing air assault operations: reconnaissance, air assault, attack, and linkup.

FA POSITIONING IN THE OFFENSE

3-22. By positioning artillery in particular sectors and assigning zones of fire, force artillery commanders can weight the main attack and facilitate future operations. Positioning for offensive operations may use varying techniques such as the assignment of "goose eggs" for enhanced flexibility. Another technique is the designation of range lines, which gives commanders a minimum or maximum range within which to deliver fires. In some cases artillery must maintain a specified position relative to other elements in an attack formation. For example, main body and advance guard formations to include supporting FA elements move in march columns to facilitate an immediate attack or a hasty defense from the march. Also, reinforcing FA battalions may be required to maintain a position relative to their DS artillery battalion accompanying a maneuver brigade in a movement to contact or in pursuit.

3-23. Artillery with a GS or GSR mission under corps arty or div arty control is positioned by the commander of the respective force artillery in coordination with FSEs and force G3s (S3s at brigade level).

3-24. Counterbattery and countermortar radars are positioned to maintain radar coverage over forward maneuvering forces. The controlling FA headquarters to which the AN/TPQ-36 and AN/TPQ-37 are assigned or attached are responsible for positioning and moving the radars. Normally, the AN/TPQ-36 radars are controlled by the DS battalion to which they are attached. The AN/TPQ-37 radars are controlled by the controlling div arty, FA brigade, or corps arty.

3-25. In the offense, corps arty and div arty firing units and HQ elements are positioned in main battle area (MBA) brigade sectors without accepting undue risk of survival and to support security forces whenever possible. As divisions cross the LC/LD in an attack or movement to contact, accompanying DS and reinforcing div arty and corps arty elements will travel well forward, integrated into march columns and prepared to respond rapidly to enemy activity. Div arty TOCs will initially be located near the LC/LD to maintain C2 and manage sustainment requirements. DS units advance with their maneuver brigades until they reach the end of the protective umbrella of the in-place MBA FA battalions. At this point, they continue movement until sufficient enemy activity

warrants action as in movement to contact for a hasty attack. In the interim, div arty HQ moves behind the lead brigades and controls fires in GS of the division. FA brigades position themselves to control corps GS fires and request positions for subordinate GS battalions through their controlling HQ to provide continuous support as lead division(s) advance. Forward MLRS units, in particular, can engage targets beyond the range of GS cannon artillery and travel to the rear of the advance guard. The overall intent is to exploit weapons ranges, facilitate communications, allow rapid massing of fires, and preclude untimely displacement when fires are needed the most. FA units may also be required to displace to support advance, flank, and rear guards and to change positions rapidly in response to main body maneuver unit redeployments.

3-26. For reconnaissance in force operations all available artillery is positioned to provide fires in depth. Accompanying artillery is positioned on the friendly side of the forward line of own troops (FLOT) and initially does not move with the supported force. However, at no time should reconnaissance elements be outside FA coverage. Also, div arty clears positions for Firefinder radars with the force HQ FSE.

DISPLACEMENTS IN THE OFFENSE

3-27. Timely displacements are essential for successful offensive operations. Units positioned by corps arty and div arty may be in danger of being left behind unless repositioning is frequent and synchronized to support the forward progress of maneuver brigades. For example, FA units supporting exploitations and pursuits must be as mobile as the supported maneuver units. However, even if forward movement is continuous, artillery must retain the capability to engage the enemy responsively; therefore, displacements should maximize continuous FS and be completed as rapidly as possible.

3-28. FA units move well forward prior to an attack with batteries and battalions displacing by echelon and carrying maximum amounts of ammunition. DS divisional artillery battalions move with their supported maneuver brigade or, in the case of airmobile, airborne, or light divisions, may be air assaulted to provide increased firepower in support of operations. Corps arty is integrated into the maneuver elements based on METT-TC. In a movement to contact, reinforcing corps arty FA brigades travel with the main body of the reinforced unit.

COMMUNICATIONS

3-29. During offensive operations, amplitude modulated (AM) radio and retransmission capabilities assume increased significance with mobile subscriber equipment (MSE) helping offset the loss of wire capabilities. The corps also establishes quickfire channels between radars and firing units and between lead maneuver elements and firing units to silence enemy indirect fire systems rapidly and to enhance the responsiveness of FA fires. Quickfire channels can be particularly useful in a movement to contact, enhancing lead unit survival and opportunities for mission accomplishment.

TARGET ACQUISITION

3-30. The primary mission of FA TA radars in the offense is to limit the effect of enemy indirect fire systems on maneuver forces. Counterfire radars are positioned based on corps arty/div arty G3/S3 recommendations to support the counterfire battle. Other considerations for TA in the offense in support of counterfire operations include:

- Identification of critical acquisition requirements to higher and lower HQ beyond the capability of organic assets to include nomination of specific target areas of interest (TAIs).
- An aggressive counterfire program within available targeting data and delivery assets.
- Smooth transition between offensive phases and continuous coverage of the zone of operation.

3-31. C2 over radars during offensive operations is normally more decentralized for defensive operations, to include cueing and displacements. To streamline acquisition and counterfire efforts, the controlling FA HQ, in close coordination with FSEs, should designate cueing agents (forward observers, UAV, striker) that can cue radars directly. Radar sections should be informed who these agents are and who has priority. Based on map reconnaissance, controlling HQ should assign general position areas and sectors of search. TA assets should be positioned well forward to maximize range capabilities and to provide early detection of targets that could impede the forward movement of supported maneuver forces.

3-32. TA assets should always be in position and ready to acquire targets. One way to do this is by “leapfrogging” radars, having one in position ready to acquire targets and one moving forward. While on the move during offensive operations, radars must retain the capability to conduct hasty occupation. If required to displace forward into hasty or new position areas before survey control has been established, TA assets should use hasty survey techniques. As an alternative, quick and accurate location surveys can be achieved with global positioning system (GPS) assets, if available.

3-33. Controlling HQ should establish critical friendly zones (CFZs) to protect friendly elements. For example, CFZs may be established around breaching lanes during a penetration. To conduct the counterfire battle more effectively, controlling HQ may also designate call-for-fire zones (CFFZs) and artillery target intelligence zones (ATIZs) (see FM 6-121 for additional details).

3-34. TABs organic to heavy division MLRS battalions plan for an overlapping umbrella of counterbattery/countermortar coverage to protect the division as it moves forward.

SURVEY

3-35. Once an attack begins, it is difficult to extend survey control to subordinate FA battalions because of the increased frequency of displacements during the offense. Hasty survey techniques (map spots and simultaneous observation [SIMO]) for location and common direction are, therefore, used extensively with survey operations focused on extending control forward as quickly as possible.

3-36. Some techniques to provide survey in the offense are:

- Reuse of previously surveyed positions.
- GPS. Prompt surveys are essential for accurate fires in a fast-paced offensive operation. GPS combined with SIMO may provide this capability. Combined GPS/inertial navigation system (INS) capabilities on firing platforms such as MLRS, high mobility artillery rocket system (HIMARS), and Paladin howitzers and the use of enhanced position locating reporting system (EPLRS) and embedded battle command (EBC)/ Force XXI battle command brigade and below (FBCB2) software provide extensive positioning and situational awareness coverage on the battlefield.
- PADS. Using a mix of ground and helicopter-mounted PADS enables survey to be extended quickly over a large area.
- Covering force. During offensive operations, more survey assets should be placed forward with the covering force. This helps establish survey control points for covering force and main body forces when they arrive.

SECTION II - FA FIRES IN SUPPORT OF DEFENSIVE COMBAT OPERATIONS

GENERAL

3-37. The immediate purpose of defensive operations is to defeat an enemy attack and, secondarily, to retain key pieces of terrain, gain time, concentrate forces elsewhere, and erode enemy resources. Employing a mobile and/or area defense, military forces defend only until they gain sufficient strength to shift to the offense and attack. During force projection operations, forward presence forces may only defend until sufficient reinforcing units arrive in theater. Deploying forces may also conduct defensive operations to support the buildup of additional combat power in theater.

3-38. At corps and division level, the commander may assume the defense in one area of the battlefield as an economy-of-force measure to allow him to attack elsewhere. Defense plans always include a point of main effort where the defender masses the effects of overwhelming combat power, striking the enemy at his most vulnerable time and place to regain the initiative.

3-39. A key element of successful defensive operations is to find and kill the enemy at a distance before being forced into high casualty, force-on-force close combat. The corps disrupts the attacker's tempo and synchronization to prevent him from massing his combat power at the point of attack. This is accomplished by massing precision fires before the enemy arrives in the MBA; defeating or misleading enemy reconnaissance forces; conducting deep operations that destroy critical enemy support infrastructure, FS assets, C2 nodes, and ADA sites; disrupting or destroying key formations or preventing their timely introduction into the battle; coordinating and synchronizing joint assets; and conducting spoiling attacks to preempt enemy attacks. If the enemy makes temporary gains in an area, friendly forces must counterattack the penetration before the enemy can consolidate his gains.

EMPLOYMENT OF DEFENSIVE FA FIRES

GENERAL

3-40. As in the offense, FA's lethality and flexibility are also key in the defense. Within the range of FA weapons, FSCOORDs can maneuver FA fires rapidly to meet enemy attacks in both the main and supporting sectors to engage HPTs and deprive the attacking force of the initiative.

3-41. As in the offense, artillery fires supporting shaping operations in deep areas in the defense can assist in defeating or deterring the enemy before he can reach MBA forces. Shaping fires will be used to separate enemy echelons, silence his artillery, and defeat maneuver elements as they move forward. HPTs include the enemy's trailing or reserve echelons, AD sites, C2 modes, and critical infrastructure facilities. Corps shaping operations in support of decisive operations will engage enemy divisions as they approach the covering force area (CFA) and shift to reserve elements when the CFA battle starts. Division deep area FA fires will target enemy formations approaching the CFA until they reach the initial delay line. Depending on METT-TC conditions, priorities may include division C2, deep reserve movements, artillery and ADA systems. For further details see Section III below.

3-42. Supported maneuver force commanders must establish priorities for targeting efforts by approving the high-payoff target list (HPTL). They must target both close and deep area targets with available FA assets. Enemy reserves must be weakened to the extent that they cannot be committed to overwhelm or bypass friendly forces. Within division sectors, div artys control division deep and counterfire operations. DS battalions support their maneuver brigades to fire on enemy infiltrations and penetrations. By shifting and massing FA combat power quickly, commanders can react rapidly to unexpected enemy actions, initiate decisive operations, and deny the enemy the initiative.

3-43. In an area or mobile defense, FS to include FA fires provides weight to the main effort and can be critical in offsetting a lack of maneuver assets. FA fires are generally employed at maximum range to disrupt, delay, and attrit enemy forces before coming into range of friendly direct fire systems. FA fires may be used to seal the base or blunt the nose of penetrations, destroy enemy forces within the penetration, or support counterattacks against penetrating forces. Counterfire in support of non-mechanized division defensive operations is particularly important because of their lack of armored protection. Dismounted infantry are at considerable risk from enemy artillery when moving from prepared positions to subsequent alternate or supplemental positions. Fires and delay operations attrit the enemy, creating conditions for successful counterattack. Shaping fires will be used to separate enemy echelons, silence his artillery, and defeat some maneuver elements as they move forward. Finally, direct and indirect fires are used to destroy the enemy in the close area battle.

FA IN SUPPORT OF DEFENSIVE SECURITY FORCE OPERATIONS

3-44. The covering force area should be deep enough so that MBA forces are not in range of the enemy's artillery. This significantly reduces the effectiveness of enemy preparatory fires and reduces the number of enemy artillery weapons available in the initial MBA battle. Covering force maneuver battalions or

cavalry squadrons usually fight from a series of mutually supporting battle positions. These positions make maximum use of terrain, obstacles, and carefully planned, longer-ranging friendly indirect fires. Laser-guided munitions directed by Strikers and COLTs can provide precision fires. The supported covering force usually makes a phased withdrawal by adjusting to the pressure at hand and mission. Counterattacks, supported by FA fires, may be needed at times and places in the defensive framework.

3-45. The depth of the security area for screen, guard, and covering forces may be affected by the availability of supporting artillery units, their range, and ammunition stocks. While cannon artillery may range to 30 km with rocket-assisted projectile (RAP) ammunition, the amount of available RAP ammunition and its capabilities are less than dual-purpose improved conventional munitions (DPICM). FA fires must be planned to mass at critical times and places. Observers must watch obstacles and plan fires to cover them. FS measures should also be permissive to facilitate engaging the enemy.

3-46. In screening missions, fires may be provided by MBA FA units positioned to delay and harass the enemy with indirect fires. Guard forces, on the other hand, must protect the main force and require more FA support than screening force. Supporting FA units and counterbattery radars should be positioned well forward to range targets.

FA IN SUPPORT OF MAIN BATTLE AREA OPERATIONS

Mobile Defense

3-47. The main FA effort in a mobile defense is providing continuous and massed supporting fires to the striking force and the destruction of the enemy force. They must be delivered with decisive effect once the striking force initiates contact with the penetrating enemy. Commanders must plan for the forward displacement of artillery assets or placing FA under direct striking force control. Since deliberate planning and massing of fires is more complex for the striking force in a mobile defense, special attention must be given to FS coordinating measures (FSCMs). Precautions must be taken to assure the rapid movement of FA systems, TA systems and CSS assets. FA units should remain with the striking force.

Area Defense

3-48. In an area defense, with friendly forces deployed laterally and in depth, priority of FA support is normally given to maneuver units on the enemy's main avenue(s) of approach. When the enemy's main attack enters division engagement areas (EAs) most fires will be massed into EAs, with emphasis on use of trigger points to initiate firing. Close coordination among FA TOCs, FSC/FSEs, and force G3/S3s is needed to plan for potential counterattacks and other offensive actions.

FA ORGANIZATION FOR COMBAT

COVERING FORCE AREA

3-49. Covering forces may have minimum maneuver combat power. To compensate for the lack of maneuver forces across a wide frontage and to maintain an adequate level of fires during displacements, covering forces may

require additional FA assets. These FA units may be attached or given an R or DS mission. Considerations for allocating FA support to the covering force in the defense are similar to those in the offense. Included are the amount and type of available artillery and other FS assets, the force commander's intent, and other METT-TC conditions. In turn, these may result in an allocation such as:

- One FA battalion DS to each battalion-sized maneuver element in the covering force.
- Nonstandard tactical missions for MBA artillery units to increase their responsiveness to the covering force FA HQ.
- A corps arty FA brigade per covering force maneuver brigade.

3-50. The deployment of covering forces across a wide frontage and in considerable depth also presents special challenges for supporting units and their parent HQ to provide adequate forward support. If MBA divisions control the covering force and supporting artillery units, attachment may not be necessary and the assignment of more decentralized tactical missions may suffice. Otherwise, a change in normal command relationships may be required:

- This may be the case when the covering force is an ACR under corps control or if an infantry or armor maneuver brigade or division receives the covering force mission. As previously noted, if an FA brigade is attached to the ACR, the FA brigade becomes the force FA HQ and the FA brigade commander becomes the covering force FSCOORD. The ACR commander should then consider making ACR-organic howitzer batteries OPCON to the force FA HQ, thereby placing all field artillery under a single FA commander.
- If an FA brigade is assigned a DS support relationship to a maneuver brigade, the DS battalion becomes OPCON to the FA brigade. When the FA brigade receives a change in mission, the DS battalion will also receive a change in mission.
- If a corps controlled covering force is employed, FA units supporting the covering force will normally revert to corps or division control after the covering force fight.

3-51. Calibers and systems to include TA assets representative of those in the MBA force are deployed in selected areas of the covering force. The intent is to make the attacking enemy believe that he is meeting the main defense and cause him to deploy early. FA units in the covering force area must also be as mobile as the supported unit to retain their responsiveness by staying abreast with the movements of the supported unit.

3-52. As CFA elements displace into the MBA before the covering force disengages, their fires will come under the control of the defending MBA divisions. Corps arty battalions retained in the MBA will initially support the disengaging covering force with deep fires and counterfires with o/o priority to the close area battle.

MAIN BATTLE AREA

3-53. FA units in the defense, as in the offense, are organized to weight the main effort; however, control is more centralized. Control is designed to achieve

a balance of maximum flexibility for corps and division commanders and adequate support for committed forces. For example, in the defense more FA units are assigned GS and GSR support relationships, giving force commanders priority on calls for fire, fire planning, and positioning. Division or corps will retain a preponderance of MLRS battalions and other supporting FA brigade assets in a GS/GSR role for counterfires and in support of close area and deep battles.

3-54. Defense within the MBA may also be kept dynamic through the formation of a large mobile reserve. Force artilleries are organized for combat to support reserves when committed. On-order tactical missions alert FA commanders to prepare for this support and to plan for a smooth transition. Early liaison between the FA and reserve force enhances this shift and makes FA support more responsive.

POSITIONING AND DISPLACEMENTS IN THE DEFENSE

3-55. GS and reinforcing FA units in the MBA must be able to support covering forces and counterattack formations. They may need to reposition laterally and in depth to ensure that they are out of the direct path of attacking enemy elements while staying within range of the attacker's formations. Routes and alternate positions must be reconnoitered. Supporting FA units will also be required to displace responsively in support of striking force operations in a mobile defense when engagement areas are outside range. Alternatively, the striking force may be augmented with additional accompanying artillery. Corps arty and div arty CPs will also displace as required to maintain control of firing assets.

3-56. To reinforce the fires of FA units deployed as part of the covering force, some MBA FA units may be assigned supplementary positions forward of the forward edge of battle area (FEBA) and given additional ammunition authorizations. However, these MBA elements must also have sufficient time and resources to prepare and occupy their primary positions behind the FEBA. In addition, they need to coordinate subsequent positions, passage points, and routes well in advance with controlling maneuver units. When the time comes, MBA FA units should be in position to cover the withdrawal of the covering force and its supporting artillery.

3-57. MBA artillery CPs coordinate the transfer of FA missions and targets developed by displacing CFA artillery prior to the actual passage of lines. This is essential for providing continuous fires during displacement. See FM 6-20-40, *TTP for FS for Brigade Operations* for specific coordination requirements. The exchange of liaison personnel can also assist in the delivery of responsive fires during these and other retrograde and passage of lines operations.

TARGET ACQUISITION

3-58. Available FA TA radars should be positioned as far forward in the security area as feasible. Positioning is based on the commander's guidance and METT-TC factors with special emphasis on security arrangements for forward-displaced radars. Security force FA units use available TA means to detect the enemy early, monitor his movement, and pass target information to MBA elements.

3-59. Since FA brigades and ACRs are not authorized organic FA radars and target processing personnel, WLRs may be attached to the covering force FA HQ. When divisions control the covering force, the div arty target processing section should augment the covering force FA HQ. When the size of the security area makes centralized control infeasible, it may be necessary to further attach radars to individual artillery battalions to provide effective counterfire coverage.

3-60. Counterfire TA elements should be shifted to focus on the enemy's most likely avenues of approach where he can be expected to concentrate his indirect fire weapons. Available assets should be emplaced across the entire corps and division front. They may also be attached to FA brigades or cannon battalions for logistic support for continuous, maximum lateral and in-depth MBA coverage. As attacking formations approach the FLOT, acquired targets are prioritized according to the supported commander's attack criteria.

METEOROLOGY

3-61. Defensive operations do not place any unusual requirements on div arty and FA brigade meteorology (met) sections. Met flights must be flown and met messages updated on a regular basis. FA brigades may be used to provide met coverage in depth.

SURVEY

3-62. Survey in the defense is simplified in MBA sectors because survey parties can move with relative freedom behind the FLOT and the amount of time generally available for preparations is greater. Subsequent positions are usually known, and survey support can be coordinated and performed before actual displacement.

3-63. During defensive operations, survey elements, particularly PADS, often experience a sharp increase in services requested by non-FA elements. Maneuver units and engineers may request assistance in accurately locating obstacles, target reference points, and observation posts and/or listening posts.

SECTION III - FA FIRES IN SUPPORT OF OTHER OPERATIONS

GENERAL

3-64. Other operations are routinely conducted as part of any corps or division operation. They contribute to overall combat effectiveness but are not distinct actions as are offensive or defensive operations. Included are counterfire, deep, rear, and SEAD operations.

COUNTERFIRE OPERATIONS

3-65. Threat FS systems can potentially inflict serious damage on friendly maneuver forces, FS systems, and supporting infrastructure; therefore, the enemy's FS system must be eliminated as a viable threat. As such, counterfires are a vital consideration for both force and FA commanders. Counterfire is a shaping operation. To achieve the required degree of fire superiority at the

critical place and time on the battlefield, planners must coordinate all FS assets among all echelons of command.

3-66. To gain the increased freedom of action and protection for supported maneuver commanders, counterfire must destroy or neutralize enemy weapons, counterfire radars, and supporting C2, communications, transportation, and logistic facilities. To accomplish this, units must employ all suitable counterfire capabilities available to the combined arms team. Included are thorough planning and coordination of intelligence and TA assets to locate threat FS assets quickly and accurately.

3-67. Counterfire can be either proactive or reactive. Proactive counterfire includes those actions taken to target and engage the enemy's FS system before it becomes active. In reactive counterfire, the friendly FS system responds to the enemy fires. The location of target sets, capabilities of sensor platforms, and ranges of available weapon systems dictate who is responsible for what portion of the counterfire battle. In most situations, the corps is responsible for proactive, deep area counterfire, establishing overall priorities, and allocating resources. Corps has the required TA and attack systems to target and engage the enemy's FS system before it becomes active. Proactive counterfire is used whenever possible when there is sufficient time to identify, locate, and target enemy systems.

3-68. Mid- to high-intensity conflicts demand an aggressive, proactive counterfire effort to limit damage from hostile FS systems. In reactive counterfire, divisional FS systems respond primarily to enemy mortar and artillery fires during or immediately following enemy engagement of friendly forces during decisive operations. Reactive counterfire normally requires quick response capabilities for optimum effectiveness and can benefit from the establishment of quick fire channels. Maneuver brigades may also have counterfire responsibilities against the mortars and artillery of committed enemy regiments as the division conducts counterfire against enemy's div arty.

3-69. During the offense, friendly counterfire is initially focused on enemy long-range weapon systems used to conduct hostile counterfire missions. It is a critical element for friendly forces to generate the necessary momentum and to counteract enemy artillery.

3-70. In the defense, counterfire should be focused on artillery formations supporting ground attacks and on the enemy's counterfire systems. FA cannon and MLRS units are positioned to meet the enemy's main effort with counterfire TA elements focused on the most likely avenues of approach where the enemy can be expected to concentrate his indirect fire weapons. Available assets should be emplaced across the entire corps and division front for continuous, maximum lateral and in-depth MBA coverage. As attacking formations approach the FLOT, acquired targets are prioritized according to the supported commander's attack criteria.

3-71. MLRS may be the counterfire weapon of choice with a maximum range of 60 km (guided MLRS [GMLRS]) and a minimum range of 10 km. It is positioned well forward to range deep into enemy formations. Augmentation by corps arty also provides divisions additional counterfire flexibility. If the division has two reinforcing FA brigades, it may assign the counterfire mission to one of them and permit the div arty and the other FA brigade to focus on the

close area fight. For specific counterfire tactics and techniques and the employment of counterfire radars, see FMs 6-20-30 and 6-20-60, respectively.

DEEP OPERATIONS

GENERAL

3-72. Application of combat power beyond the close area battle to defeat the enemy rapidly with minimum friendly casualties is preferable to attrition through sequential offensive and defensive operations. In the defense, for example, operations in depth prevent the enemy from gaining momentum in the attack. Sudden strikes by both fires and maneuver from a variety of directions synchronized with other disruptive effects, usually impact on decisive operations and can stall and overwhelm an attack before it has begun.

3-73. To synchronize operations between the deep and close areas, commanders integrate and prioritize reconnaissance, intelligence, and TA efforts to focus fires and maneuver at the right place and time on the battlefield. Corps and division DOCCs normally plan and coordinate deep operations and monitor their execution from main CPs. In the offense and defense, the corps coordinates deep operations with its divisions to shape the battlefield and synchronize operations as part of the overall corps plan. Assigned or attached corps assets normally available for deep operations are ground maneuver, air assault, and airborne units; FA cannons, rockets, and missiles; PSYOP; EW; and attack helicopters. Maximum synergistic effects are achieved through a combination and application of all available joint and combined arms assets.

3-74. Deep operations are neither continuous nor sustained at constant levels of effort. They are developed to achieve specific results based on the enemy situation and assets available. For example, deep fires may shift to mass fires in the close area battle and then shift back to deep targets.

FA EMPLOYMENT CONSIDERATIONS

Corps

3-75. Corps shaping operations can provide protection by delaying or destroying the enemy's operational reserves and capabilities to bring combat power to bear on friendly close combat forces. By attacking uncommitted enemy forces, and disrupting the enemy's support and C2 systems, shaping operations can prevent the enemy from using essential resources where and when he wants in close operations. However, the outcome of decisive operations should never totally depend on the results of shaping operations. Although enemy forces may be attacked deep, their destruction is often difficult to achieve because it requires massive resources. As improved smart/brilliant FA munitions are fielded, future effectiveness may be increased. Currently, however, disruption may often be a more realistic goal.

3-76. The purpose of corps deep operations extends beyond shaping the close area battle, isolating the enemy in the forward area, and establishing favorable conditions for future decisive operations. Deep operations may be decisive by themselves and may be separated from the close area battle in time and space. The corps may strike deep HPTs to limit an attacker's options, destroy his cohesion, nullify his FS and air defense assets, disrupt his C2, destroy his

supplies, affect closure times for his echelons and reserves, and break his morale. In support of joint operations, deep FA fires can also support JSEAD, TMD, and JAAT operations.

DIVISION

3-77. At division level, deep operations in the defense are initially targeted on enemy indirect fire systems in counterfire operations, C2 nodes, AD systems, and uncommitted forces. The priority of attack during this phase is on economy of force units and those moving away from engagement areas. When the enemy moves into EAs, the delivery of most deep artillery fires may be temporarily suspended to focus on the close area battle. However, deep targeting and intelligence operations will continue, and the deep fight will resume based on the status of close area operations and ammunition availability. Enemy forces not yet committed to the close area fight will be targeted as they enter the divisions' deep operations area after a handoff from corps. Fires will be delivered to disrupt the enemy's tempo, movement, and synchronization.

REAR SECURITY OPERATIONS

GENERAL

3-78. The fluidity and tempo of corps and division offensive and defensive operations pose special challenges for rear area security. The forward movement of units and their sustainment in decisive and shaping operations are critical if friendly forces are to retain freedom of action and maintain or regain the initiative. To achieve success, the corps and divisions must protect their capability to sustain forward elements and defeat enemy forces intent on disrupting rear operations.

3-79. Corps and subordinate divisions develop rear operations defense plans to counter threat forces. These plans are synchronized with decisive and shaping operations in corps and division main CPs. The plans identify friendly forces to include FS assets to deal with any substantial rear area threat while minimizing the impact on friendly operations. They must reflect the same agility, versatility, depth, and synchronization required for close and deep area operations.

EMPLOYMENT OF REAR AREA FA FIRES

3-80. Depending on actual circumstances, FS for rear operations may be initially provided by Army or Air Force aviation or air cavalry assets. For example, attack and OH-58D helicopters are ideal assets to assist rear CPs initiate and control rear area FS operations. If friendly aircraft are used extensively against rear area enemy formations, MBA FA units may also be called to support JAAT operations. Typically fires will be in close support to reaction forces or the TCF but could also require interdiction of other unforeseen elements threatening corps and division support units and priority protection points.

3-81. Corps arty and div arty subordinate units usually will establish liaison with rear CPs if located within sector. Although not assigned to the rear area command, they may come under the rear area command's control for security operations and terrain management.

3-82. To minimize the potential for fratricide, fires should be cleared at the lowest echelon (base, base cluster, rear area operations center (RAOC), or rear CP [in order]), with clearance methods and communications links clearly defined in supporting plans.

FIELD ARTILLERY ORGANIZATION FOR COMBAT AND POSITIONING

3-83. As artillery assets are seldom sufficient to dedicate FA units to support rear operations as a sole or primary mission, FA support can present special planning and coordination challenges. Rear area FA support requirements are normally met by positioning GS and GSR FA cannon units so that they can range rear areas while continuing to perform their main missions in support of deep and close area operations. If distances preclude this, FA units may be assigned o/o missions to support corps or division rear area operations. In such cases, FA firing units will have to reconnoiter rear area positions and routes.

3-84. Units so employed are not in reserve; rather, they are assigned a tactical mission in support of the respective maneuver force and must plan accordingly. This includes establishing liaison with the supported HQ, rear area CP, and FSE to integrate their fires into rear area battle plans. Consideration should also be given to establishing prestocked ammunition sites. For additional details see FM 6-20-30.

3-85. If the threat requires designation of a TCF, then the likelihood of a significant rear area action requiring FS is high. In this case, the maneuver brigade TCF most likely would have its habitually associated DS FA battalion in support.

SUPPRESSION OF ENEMY AIR DEFENSES

GENERAL

3-86. SEAD is critical to the survival of corps and division air assets. It must be accomplished quickly and efficiently in support of aviation operations, particularly in air assault operations. It is an integral part of aviation mission planning synchronized with and integrated into overall corps and division operations. Lethal friendly fires suppress, neutralize, and destroy known and suspected threat AD weapons, radars, warning sites, and CPs. The division has primary responsibility for the suppression of ground-based air defense to the limits of observed fire. Targets beyond observed fire become a primary Air Force responsibility. In addition, divisions have secondary responsibility out to the range limit of their indirect fire weapons.

SEAD CATEGORIES

3-87. SEAD operations are divided into three categories: campaign, localized, and complementary.

FA TACTICS AND TECHNIQUES IN SUPPORTED SEAD OPERATIONS

3-88. SEAD must begin early as complementary SEAD to decrease the density of hostile air defense systems and make friendly aviation assets more effective in the close area fight. This is particularly critical for infantry divisions since they rely heavily on attack helicopters and air support for deep operations and subsequent close support. The primary SEAD role of divisional FA systems is in

conducting localized SEAD to open corridors or suppress specific attack objectives in cross-FLOT operations. Suppression will begin prior to friendly aircraft arrival and should continue as long as the aircraft are within range. Egress routes are established and suppressed in a similar manner. Since the opening of corridors is a major operation requiring a heavy commitment of resources, only a limited number of corridors can be established in a given period of time.

3-89. Corps arty with div arty assistance can suppress accurately located campaign SEAD targets to the maximum range of indirect fire systems with unobserved fires. Fires must be coordinated with adjacent and subordinate units to ensure all suppression operations are mutually supportive along with joint efforts, where appropriate.

3-90. To support corps and division aviation elements, the G3, based on FSE recommendations, may change the artillery's task organization and priority of fires. This may include a mix of DS, R or GSR artillery, or assigning the aviation brigade priority of fires for a specific mission. FA units may also be relocated to support their primary mission and to provide SEAD support in the form of preplanned and on-call fires.

3-91. In addition to available 155mm howitzers, MLRS can be an effective SEAD weapon by creating corridors at the FLOT or engaging several targets with its multiple-aim point capability against thin-skinned AD weapons and radars. However, MLRS use in a SEAD role must consider the required safety distance for suppressing targets at the FLOT and in engagement areas, reload times for launchers, and normal relocation requirements after each launch.

3-92. Smart munitions and advanced sensors can also reduce target location difficulties if the location is within the sensor's range. Artillery-delivered smoke in support of SEAD operations can be both an advantage and disadvantage. Smoke can hide aircraft from enemy AD weapons that use visual acquisition. However, smoke is ineffective as a countermeasure against electronic sensor-guided AD systems and can also obscure targets and prevent friendly aircraft from identifying enemy AD systems.

3-93. As an additional SEAD consideration, fires from mortars, cannon, and rocket artillery pose hazards to friendly aircraft activities. The highest probability of conflict between aircraft and surface-to-surface indirect fire occurs at relatively low altitudes in the immediate vicinity of firing units and target impact areas. Airspace coordination measures must be designed to reduce any potential hazard.

SECTION IV - OTHER OPERATIONS

GENERAL

3-94. Corps and divisions may also be required to conduct other operations, such as infiltrations, retrograde operations, river crossings, and encirclements. These operations may be executed in combination, sequentially, or as part of the offense or defense.

INFILTRATIONS

GENERAL

3-95. Infiltrations are often used as a specialized tactical tool in support of deception operations, small unit actions, intelligence collection, or to posture a unit for an attack. They are normally executed by light infantry elements that move through an enemy-held area to a position of advantage in the enemy's rear. Infiltrations are not limited to movement on foot and may include light and some armored vehicles to enhance FS, long-range communications, and supply and ammunition availability.

FA TACTICS AND TECHNIQUES DURING INFILTRATIONS

3-96. Although infiltrations normally consist of platoon- and company-sized formations and generally do not exceed brigade-size, FS and control are frequently complex and difficult. FS to include counterfire radar must be available to infiltrating forces throughout the operation. Brigade-sized infiltrations will normally have at least one DS FA battalion well forward to support both the infiltration and attack on the objective. Additional FA units should be placed in a reinforcing role to DS units, especially longer-ranging 155mm SP howitzers of Corps Arty FA brigades, with MLRS used to support the actual attack or to defend against an enemy counterattack. Supporting artillery fires can be used to target known enemy locations and mask the movement of infiltrating forces by firing false preparations into other areas of the battlefield. FS control measures must be established and followed to prevent fratricide of friendly forces deep in enemy territory.

RETROGRADE OPERATIONS

GENERAL

3-97. A retrograde operation is an organized movement to the rear away from the enemy. Reasons may include a requirement to disengage from combat, avoid combat under undesirable conditions, draw the enemy into an unfavorable situation, gain time without fighting a decisive engagement, place friendly forces into a more favorable position, and permit use of a portion of the force elsewhere. They may be executed in combination, sequentially, or subsequent to an offensive or defensive mission. The three types of retrogrades are delay, withdrawal, and retirement.

FA TACTICS AND TECHNIQUES DURING RETROGRADE OPERATIONS

Delay

3-98. FA tactics and techniques for covering force operations during the defense apply to retrograde operations. To trade space for time while inflicting maximum damage on the enemy, FA fires should be delivered at maximum ranges and as early as possible. Artillery should be positioned in depth and displace by echelon to ensure continuous fires.

Withdrawal

3-99. Tactics and techniques previously identified for covering force operations and in support of attacks, delays, feints, or demonstrations are applicable. Fires should be planned for withdrawals under enemy pressure and without pressure.

The maximum feasible number of firing units should be forward with disengagement criteria clearly established and actions rehearsed. For example, to reinforce the fires of the covering force, additional corps FA units may be provided to the covering force with control reverting to corps arty as soon as possible. Organic divisional MBA artillery will also provide support when the covering force comes within range. Should the enemy attack before withdrawal is completed, FA assets will be employed to slow the enemy's advance, cover obstacles with fires, support spoiling attacks, provide protective fires, deliver massed fires to facilitate disengagement of friendly forces, and help extricate isolated units. SCATMINE and artillery smoke may be planned along enemy avenues of approach if needed to assist in covering force withdrawal. MBA FA units not supporting covering force operations will normally withdraw along with divisional maneuver forces at night. For considerations affecting the withdrawal of FA units in the covering force during rearward passage of lines, see rearward passage of lines paragraph below.

Retirement

3-100. Retirements are conducted when units move to the rear in an organized manner when not in contact with the enemy. Although retirements may be largely administrative in nature, commanders must be prepared to deal with enemy Level II and III rear area threats along the route of withdrawal. FA fires may be required to deal with such Level II and III rear area threats and to provide fires in support of tactical moves to the rear including support for advance and flank forces.

RIVER CROSSINGS

GENERAL

3-101. River crossings are normally a divisional responsibility with corps providing planning and resource support during defensive or offensive operations. They require centralized planning and control.

FA TACTICS AND TECHNIQUES IN SUPPORT OF RIVER CROSSING OPERATIONS

3-102. Corps arty and div arty assets are positioned to provide continuous FA fires during all crossing phases and subsequent operations. This includes the delivery of smoke to obscure crossing sites from the enemy and SCATMINE to interdict an enemy counterattack force. Priority of fires is with lead elements during the advance and the bridgehead force. Immediately before the assault, the division will fire a preparation and fire SEAD to support airmobile operations as required. Corps arty reinforces the bridgehead DS artillery with on-order missions and will conduct counterfire and counterbattery fires as required. DS FA units will cross as soon as possible to provide support for bridgehead expansion.

ENCIRCLEMENTS

GENERAL

3-103. Encirclements occur when the enemy has cut all ground routes of evacuation and reinforcement. Friendly forces should attempt a breakout before the enemy has time to block escape routes and deplete friendly force resources.

Other options are to attack, defend, or exfiltrate, employing security forces and reserves as noted under defensive operations.

FA TACTICS AND TECHNIQUES DURING FRIENDLY FORCE ENCIRCLEMENTS

3-104. As in most defensive operations, FA assets will be kept under centralized control to provide commanders the means to influence the battle more directly and to support a cohesive perimeter defense. In case of successful breakout, FS coordination measures will be critical to the linkup of converging friendly forces and the preclusion of fratricides.

3-105. In support of friendly breakout attempts, FA fires must be highly responsive and support the initial defense, breakout and rear guard operations, and movement to linkup. In the initial defense, firing units are positioned to allow rapid shifts to support the defensive perimeter without displacing to new positions. Units are also dispersed throughout the encirclement to limit their vulnerability to enemy counterfire. Continuous fires will be massed on the enemy at the point of penetration to develop overwhelming combat power to open the rupture point, suppress enemy direct fire systems, isolate the breakout from the enemy, and assist in disengaging from the enemy. Once the breakout is successful, priority for fires within the encircled force may be shifted to rear guard operations. FA fires in support of breakout operations should include supporting fires from corps elements outside the encirclement. If within range, they should support close area operations and provide deep FA fires to prevent enemy reinforcements from linkup with encircling forces or attacking the flanks of the unit breaking out.

FA TACTICS AND TECHNIQUES IN SUPPORT OF ENEMY FORCE ENCIRCLEMENT

3-106. If the decision is to reduce or destroy an encircled enemy by fires alone, FA fires, CAS, and attack helicopters will provide the primary firepower. However, experience has shown that this option requires overwhelming fires and is highly ammunition, weapon, and time intensive. Reduction by fire and maneuver uses a combination of fire and ground maneuver forces in attack operations to destroy the encirclement. It is a more assured and quicker method of forcing the enemy to surrender, displace, or face annihilation. It also allows the enemy less time to countermaneuver.

PASSAGE OF LINES AND RELIEF IN PLACE

GENERAL

3-107. Both offensive and defensive operations frequently include passage of lines or relief in place operations. A passage of lines is an operation in which a force moves forward or rearward through another force's combat positions with the intention of moving into or out of contact with the enemy. A forward passage of lines is normally conducted to perform an infiltration, exploit tactical success, or initiate a counterattack. A relief in place normally occurs during a defense when an incoming unit replaces all or part of a unit already in the combat area. These operations are extremely complex, involve a degree of risk, and require detailed, centralized planning and decentralized execution. Coordination including on-site liaison is critical to the successful execution and transfer of control and responsibility between stationary and passing commanders.

FA TACTICS AND TECHNIQUES FOR PASSAGE OF LINES AND RELIEF IN PLACE

3-108. Close coordination and understanding between FA commanders and staffs are essential for the smooth transfer of control. The emphasis is on positive control of fires and continuous fires during passage to include clear designation of a time or event for handover of control.

Forward Passage of Lines

3-109. During a forward passage of lines, FA units need to establish liaison with the unit in contact and its supporting FA battalion. The indirect fires of the unit in contact normally support the passing unit until the passing unit has moved into firing positions to support the continuation of the attack or until passing units are out of range. This allows the passing unit to complete passage with its assets and ammunition intact. DS FA units should be well forward in the passage sequence, moving with maneuver brigade formations. Corps arty assets are also forward to provide overlapping support by bounding battalions as the division advances. Prior to conducting a passage of lines, both in-place and passing units should plan massed, coordinated fires throughout the AO. After responsibility for the AO transfers to the passing maneuver force, the commander of the passing unit coordinates all fires. Passage of lines should be as rapid as possible to minimize the risk while in-place and passing elements occupy the same terrain. Coordination should include:

- Exchange of intelligence, FA support/FS plans, and standing operating procedures (SOPs). Mutual understanding of recognition signals and unit code words may be critical.
- Security measures during passage.
- Position areas for FA assets.
- Selected routes, movement control measures, and guides.
- Transfer of responsibility to respond to calls for fires and communication channels and frequencies.

Rearward Passage of Lines

3-110. As the enemy approaches the FEBA, the handover of the enemy from security to MBA forces becomes a highly critical part in the defense. Planning procedures for a rearward passage of lines are similar to those in a forward passage except that coordination is even more critical under enemy pressure. The unit in position provides the passing unit all possible assistance. The provision of FS consisting largely of FA assets is particularly important especially when covering the withdrawal of elements in contact during a delaying operation. FA missions and targets developed by the displacing artillery in the covering force area should be transferred well in advance of passage of lines to provide continuous fires while attempting to disengage.

3-111. Effective communications between FA battalions in the MBA and security area are necessary for a smooth transition and continuous FA support. This is best achieved when FA units in the MBA monitor covering force FA nets before handover and when security area FA units continue to use the same frequencies as they reposition into the MBA. The MBA FA battalions will answer calls for fire on these frequencies until all covering force maneuver

elements have relocated into the MBA. Specific communications procedures should be stated in the OPORD. Handling radio communications in this manner precludes:

- Security area FA units changing frequencies at a critical time.
- Issuing additional signal operating instructions (SOI) extracts to covering force FA units and running the increased risk of SOI compromises.
- Early detection of MBA nets by enemy jammers/direction-finding equipment before the MBA fight starts.

Relief In Place

3-112. Relief in place operations must be accomplished as quickly as possible and, if possible, in secrecy. The purpose is to reduce vulnerability to enemy action, particularly when friendly forces are intermingled. FA assets from both in-place and relieving units support the relief in place operation. Subject to available time, FA units should exchange plans and liaison personnel and conduct briefings and detailed reconnaissance. Liaison personnel from the relieved unit will remain with the relieving unit until FA support/FS plans have been coordinated. Published orders should specify the time of relief, units to be relieved and sequence, future missions, restrictions on advance parties, security, routes, and route priorities. To maintain security, relieving units use the relieved unit's frequencies and nets with the relieved unit's signal officer remaining in charge of communications throughout the relief operations.

3-113. DS battalions move with their maneuver brigades. Corps arty FA assets supporting the in-place division will be positioned to support the relieving unit's defense to include any MLRS elements in support of the counterbattery program. If possible, the relieved unit's artillery remains in place until all other units have been relieved. This may be critical in the event the enemy detects the relief early and tries to exploit the weakness of the defending division. Until the change of command, all artillery remains under the relieved commander's control. To facilitate the exchange, relieving units may initially occupy alternate and supplemental positions of in-place units and receive high-value, low-density Copperhead and FASCAM munitions for redistribution.

SECTION V - STABILITY OPERATIONS AND SUPPORT OPERATIONS

GENERAL

3-114. Stability operations apply military power and force presence to influence the political environment, facilitate diplomacy, and disrupt specified illegal activities. Stability operations may be undertaken to complement and reinforce offensive, defensive, or support operations or they may be the main effort. Stability operations are frequently characterized by rapid joint force contingency projections with detailed rules of engagement (ROE). The categories of stability operations are as follows:

- Peace operations.
- Foreign internal defense
- Security assistance.

- Humanitarian and civic assistance.
- Support to insurgencies.
- Support to counterdrug operations.
- Combating terrorism.
- Noncombatant evacuation.
- Arms control.
- Show of force.

3-115. Support operations provide essential supplies and services to assist designated groups. They are conducted mainly to relieve suffering and assist civil authorities to respond to crises. In most cases forces achieve success by overcoming conditions created by man-made or natural disasters. Support operations generally cover humanitarian assistance and environmental assistance.

3-116. Once troops are committed, doctrine stresses the overriding requirement to provide security for the force and population, when appropriate. The threat may be man, nature, or both; however, ROE are never a substitute for a commander's inherent responsibility to protect his force. Units and soldiers have the right (duty) to protect themselves even when initially deployed into a benign environment.

FA TACTICS AND TECHNIQUES IN SUPPORT OF STABILITY OPERATIONS AND SUPPORT OPERATIONS

3-117. Stability operations and support operations may encompass activities where corps arty and div arty elements may be employed in areas outside the US in support of US military operations in nontraditional noncombatant roles without primary weapons. FA firepower assets may be strictly limited if deployed at all. Disaster relief and humanitarian and security assistance are examples. The FA's communications infrastructure, coordination and liaison skills, and inherent mobility can be applied as part of a refocused FS effort to assist in a command's overall coordination and liaison effort. Potential responsibilities include enhancing effective C2, convoy operations, local security operations, and liaison in support of civil-military affairs. Friendly force protection using minimum essential force to neutralize an aggressor will be a primary concern. ROE must clearly specify when FA fires are appropriate and justified.

3-118. For operations involving actual combat or the threat of force in peacekeeping and peace enforcement operations, US forces may initially be committed in a deterrent posture but prepared to exert force when required. FA units must be prepared to transition to combat operations and deliver lethal and nonlethal fires carefully. Minimum preparations include those necessary for force protection and base defense for all-around security. In case of FA fires supporting offensive attacks and raids in stability operations, normal considerations apply with particular emphasis on using minimum required resources, preclusion of collateral damage, host nation coordination, and the political implications of the use of force. In defensive situations, FA fires are

used to the degree necessary to protect the force. In addition, there may be increased use of restrictive fire control measures to minimize potential damage to important cultural centers or dense population areas. Both restrictive and permissive FSCMs must be harmonized with the ROE. Close coordination with host country officials in the operational area is needed and communications with host country forces must be maintained.

3-119. In case of forced entry operations into non-permissive environments, ROE for FS/FA fires may be restrictive and limited to response in kind with focus on precision fires. Initial players may be AC-130H aircraft and CAS using precision munitions and AH-64 attack helicopters. FA and mortars may be used after the initial assault. The presence of FA assets in an airhead would probably be initially limited to one DS battalion per maneuver brigade, supported by an AN/TPQ-36 radar section.

3-120. Stability operations place a high priority on TA to protect the peacekeeping force and to assist in enforcing negotiated peace settlements. TA assets can be linked to shooters to silence hostile indirect fires or to HQ CPs to disseminate information on indirect fires among factions. Firefinder radars are key to detecting and neutralizing belligerent indirect fire assets. Protection of these radars and associated equipment becomes paramount.

Chapter 4

Field Artillery Command Post Operations

This chapter provides an overview of the essential role information management plays in the delivery of timely and effective artillery fires. The focus then shifts to FA CPs at corps, division, and FA brigade to include elements within subordinate tactical operations and administration and logistic centers. Where feasible, common duties and characteristics among these three echelons of command have been aggregated with differences and additional specifics highlighted in subsequent sections. Since responsibility for the integration of FA fires into the overall FS system rests with force main, tactical, and rear CPs, the chapter also highlights operational responsibilities of corps and division CP FSCs/FSEs and respective DOCCs.

SECTION I - FA CP RESPONSIBILITIES, ORGANIZATIONS, AND FUNCTIONS

ROLE OF EFFECTIVE INFORMATION MANAGEMENT

4-1. A common denominator for high performance units has historically been superior proficiency in managing information. Effective information management practices allow commanders and staffs to see the battlefield in time and space -- a function of getting the right information to the right person(s), CP, or delivery system in the right format at the right time. These are absolutely critical for the delivery of timely and effective FA fires. The resulting enhanced situational awareness allows the FA commander and staff to visualize the battlefield more accurately and to detect, identify, track, and engage targets effectively.

4-2. Although effective and efficient information management may be a fundamental prerequisite for attaining high performance, it is but one of the enablers, not the sole determinant. Other factors such as unit cohesion and teamwork, command presence and leadership, and goal clarity are also critical. Information requirements for commanders and staffs are often distinctly different. Staffs require information in greater volume and detail for planning, successful execution of staff processes, and the application of control. Commanders must blend native abilities and experience to such a degree that they can visualize an operation quickly and accurately without detailed, voluminous sources of information. In either case, information generated by automated and manual systems must have one overriding purpose: enabling commanders to make timely decisions during the turmoil and confusion of battle. FM 101-5, *Staff Organization and Operations* provides an overview of significant information management factors addressing prerequisites for information management during CP operations and the tasks of collecting, processing, disseminating, displaying, protecting, and denying information.

FA COMMAND POSTS

GENERAL

4-3. CPs assist commanders in influencing actions on the battlefield while monitoring and maintaining control over unit operations. For successful mission accomplishment, CPs must be efficient and flexible in gathering, collating, analyzing, displaying, and disseminating information. All information should flow through the CP and the information manager. Since CPs are also priority enemy targets, they should be as small and mobile as possible to allow for rapid displacement.

4-4. Specific FA C2 organizations are normally established by unit SOP and reflect the commander's information requirements that best support his leadership style. Commanders should organize and train a battle staff, determine the succession of command, and assign responsibilities. By holding subordinates responsible for their actions and by fostering a climate of mutual trust, cooperation, and teamwork, they can greatly increase their command's effectiveness. Successful battlefield information management is also greatly improved through rigorous training and refinement of the command's C2 system. As a rule, effective and efficient CP operations, supervised by a proficient information manager, are critical for the conduct of productive and successful combat operations.

4-5. The responsibilities of the principal members of the FA C2 organization are outlined in the following paragraphs and sections. Commanders may modify these responsibilities based on the situation and individual capabilities and inclinations. Overall, FA CP functions are designed to monitor events and assist commanders and subordinate units in mission planning, preparation, and execution. Critical functions are to:

- Maintain contact and coordination with higher, adjacent, and subordinate units.
- Adjust current FA support plans and plan future operations.
- Receive, analyze, and disseminate tactical information (vertically and horizontally).
- Maintain situation awareness graphics and reports.
- Request and synchronize combat, CS, and CSS for the battle.
- Coordinate the delivery of fires.

ROLE OF FA COMMANDERS AND STAFF

FA COMMANDERS AND COMMAND GROUP

4-6. As FSCOORDs, corps arty and div arty commanders are responsible for planning, integrating, coordinating, synchronizing, and implementing FS for current and future deep, close, and rear operations. Although normally spending much of their time in the company of force commanders guiding FS operations, they retain full command responsibility for FA operations.

4-7. The commanders' role in FA CP information management processes cannot be overstated. They set the pace and normally through the chief of staff/executive officer (CofS/XO) provide subordinate staffs and units planning

guidance in the form of missions, taskings, and a clear statement of their priorities and commander's critical information requirements (CCIR). Unit performance is directly related to their ability to focus the efforts of subordinates through effective communication of information. Through personal initiative, force of personality, experience, and drive, commanders can often overcome shortfalls in CP information management.

4-8. The command group consists of the commander and those selected to accompany him away from the CP. The composition, nature, and tasks of the command group are determined by each commander for optimum flexibility in executing functions as FSCOORD and FA commander. The command group typically maintains continuous situational awareness of the enemy and friendly situation through physical observation and from reports by subordinate commanders and higher and adjacent units. Both the force FCEs/FSEs and FA CPs must keep commanders updated on new FS/FA-relevant CCIR information and provide an analysis of events with accompanying recommendations. Drawing on the operations and other staff estimates, the commander prepares and updates the FA commander's estimate as the situation evolves. He ensures all information pertaining to mission planning, preparation, and execution is disseminated expeditiously.

THE FA STAFF

4-9. The FA staff is composed of personal, coordinating, and special staffs. They assist commanders in exercising their authority and making decisions.

4-10. A well-trained coordinating staff greatly reduces demands placed on the commander by developing options and recommendations as needed and ensuring commanders have access to critical, timely information to plan, prepare, and execute. Staff officers must understand the capabilities and limitations of the command's organic and supporting elements, must share information vertically within staff channels and horizontally among other staff elements, and must understand what each has to offer.

4-11. Special staff officers such as the signal officer assist commanders in their areas of expertise generally under the direct supervision of a member of the coordinating staff.

4-12. To control the flow of information within the FA CP, the commander should explicitly designate an information manager, usually the CofS/XO or FA G3/S3. As information manager, he is the commander's principal assistant responsible for internal and external staff coordination. During the commander's absence, he represents the commander and directs action in accordance with established command policy and guidance. During the battle, the information manager is normally in the CP where he monitors the battle, reports to higher headquarters, keeps abreast of the situation, integrates CS and CSS into the overall plan, and plans for future operations. As information manager, he outlines and monitors the performance of the staff in processing information, the CCIR, and liaison activities.

CP ORGANIZATIONS

4-13. Corps arty, div arty, and FA brigade CPs are the C2 facilities from which the respective commander, assisted by his staff, directs and sustains FA operations. They:

- Provide the required personnel, physical setting, and communications and automation systems to assist FA commanders and principal staff officers see the battlefield, plan, and direct operations.
- Integrate and synchronize FA internal and external combat, CS, and CSS operations.
- Establish priorities, allocate resources, and perform functions as alternate CP when required.

FA CPs normally consist of two major components: the TOC and ALOC. A battery HQ provides life support, communications, and security (Appendix E) to these elements. Specific CP configurations in support of 24-hour operations should be established by unit SOP influenced by METT-TC and unit modified table of organization and equipment (MTOE).

CP LOCATIONS AND OPERATIONS

4-14. CP positioning is influenced by a number of variables such as the commander's personal inclinations, the threat, communications requirements, experience and availability of personnel, and other METT-TC considerations. Among the primary considerations are communications, accessibility, and survivability. The objective is to select a location suitable for establishing and maintaining C2 over subordinate and supported FA units and facilitating coordination and communication interfaces with higher and adjacent HQ. Coordination among the FA TOC, ALOC, command group, and force CPs must be continuous to ensure all elements are integrated. To meet this goal, corps arty and div arty CPs are normally located within two to five kilometers of corps/division main CPs. Alternatively, they may be collocated within the maneuver command's main CP complex. Displacements should be planned to ensure the CP is stationary during critical phases of the battle. Displacing rapidly and providing a reduced electronic signature also enhances TOC security. TOC personnel should be organized to provide both security and continuous operations on a 24-hour-a-day basis. Sleep plans must be enforced to preserve the ability of CP personnel to perform continuous operations.

4-15. To maintain control over subordinate elements in immature theaters, on extended battlefields, or with insufficient long-range communications, corps arty CPs may be required to echelon themselves. Such action places increased burdens on organic C3 capabilities and normally requires augmentation from the corps signal brigade (e.g., tactical satellites [TACSAT] or additional MSE small extension node [SEN] teams).

4-16. To execute functions as an alternate CP, the following should be in place:

- Status of all reports, orders, and graphics that the TOC develops, sends, receives, or has in current use.
- Personnel trained in the functions required to meet minimum standards of the TOC.

- Ability to communicate with the command group, subordinate units, and the force FSC/FSE.

FUNCTIONS AND RESPONSIBILITIES OF KEY PERSONNEL

FA COMMANDER

4-17. The FA commander provides overall supervision over the FA decision-making process while simultaneously executing responsibilities as FSCOORD on the force main CP staff. Through his CofS/XO and staff, he ensures FA planning activities are effectively synchronized and integrated horizontally within the FA CP and with adjacent elements and vertically with higher, subordinate, supported, and supporting elements.

4-18. He monitors mission preparations to include rehearsals and ensures FA elements are task organized and deployed in support of decisive, shaping and sustaining operations. He provides command presence at critical times and places, retaining his freedom to move, communicate, and survive on the battlefield. Supervising the transition from planning to execution, he:

- Monitors implementation of FA survivability measures. If required, requests additional force protection assets (e.g., ADA, maneuver elements, engineers).
- Adjusts his CCIR as the situation demands.
- Directs changes to the FA support plan based on his “running” estimate and changes in the force FS plan/OPLAN/OPORD.

4-19. During mission execution, the FA commander tracks the flow of battle and directs the FA decision-making process under constrained conditions. He:

- Confirms adherence to the force commander’s attack guidance, FSCM, clearance of fire procedures, and ROE.
- Determines ability of subordinates to execute the FA support plan.
- Monitors BDA results of FA fires in support of the decisive, shaping, and sustaining battles.
- Confirms adherence to the five fundamentals for employing FA in combat.
- Projects the outcome of the current battle to determine the need for further adjustment to FA support.
- Assesses combat readiness of subordinate units after mission completion and initiates remedial actions.

CHIEF OF STAFF/EXECUTIVE OFFICER/S-3

4-20. The CofS/XO/S3 coordinates FA CP staff efforts based on a clear understanding of the commander’s intent and guidance. Policies and guidance established in the TSOP are practiced during TOC battle drills and strictly adhered to during execution under his overall supervision. He functions as the commander’s principal assistant responsible for internal and external staff coordination during mission planning, preparation, and execution. His primary functions include the following:

Control of the FA CP Information Flow

4-21. The CofS/XO/S3 ensures that information is received, analyzed, processed, and disseminated quickly and efficiently among all members of the FA CP. He:

- Disseminates the FA commander's guidance and directions expeditiously to all staff members and subordinate elements. Ensures all staff officers/NCOs clearly understand:
  - The FA and higher commanders' intent and CCIR.
  - The concept of operations.
  - Status of battle preparations and the enemy and friendly situation.
- Ensures staff members aggressively establish and maintain a constant dialogue with higher, subordinate, supporting, supported, and adjacent elements.
- Ensures staff estimates are updated when new information becomes available or when the tactical situation changes significantly.
- Ensures timely submission of reports and other supporting information to higher HQ.
- Ensures decisions are made in a timely manner and communicated through clear, concise, and rapidly disseminated orders.
- Assists the commander in his battlefield visualization through battle tracking and:
  - Prompt and accurate submission of CCIR responses and any actual/perceived changes in enemy intentions and/or courses of action (COAs).
  - Advising the commander of critical deviations from the facts and assumptions in the FA support plan.
- Supervises liaison operations.
- Ensures staff integration and synchronization during mission planning, preparation, and execution.
- Ensures the FA CP supports effective 24-hour operations. Includes provisions for shift changes, CP displacements, sleeping, eating, and operations under NBC conditions.
- Manages time available for planning, preparation, and execution of key events.
- Provides the commander periodic updates on the status of the current battle and planning efforts.
- Participates in formal and informal briefings during the planning process to include mission analysis, war game, and COA decision briefs.
- Monitors preparation and dissemination of the FA support plan to include full integration of combat, CS, and CSS provisions.
- Ensures continuous synchronization of the FA support plan during mission preparation and execution.
- Determines continued validity of facts, assumptions, CCIR, and staff estimates underpinning the FA support plan.

- Monitors modifications to the FA support plan to account for deviation from anticipated events.
- Ensures changes to published plans are approved and disseminated expeditiously to subordinate and supporting units through FRAGO/warning orders (WARNOs) (orally, in written format, or by overlay).
- Assesses combat readiness of subordinate units after mission completion.

G3/S3 FUNCTIONS AND RESPONSIBILITIES

4-22. Corps arty, div arty, and FA brigade operations officers are the FA commander's primary assistants for preparing FA support plans and orders, exercising control over subordinate FA formations, and delivering timely and effective FA fires. FA G3s/S3s are normally in charge of FA TOC operations while deputy fire support coordinators (DFSCOORDs) provide detailed supervision over FSC/FSE operations in maneuver force CPs. In addition, G3s/S3s exercise coordinating staff supervision over a number of closely related functions to include communications, survey, meteorology, and NBC operations. Through the signal officer, they manage electronic, wire, and messenger systems. Specifically, they:

- Plan, coordinate, and supervise execution of force projection operations.
- Develop and maintain the FA operations estimate and provide findings and conclusions to the FA CP staff, FA command group, and force FSC/FSE.
- Maintain effective control over TOC operations during mission planning, preparation, and execution, ensuring effective staff coordination among TOC and ALOC members, goal clarity, and teamwork.
- Ensure the commander has ready access to critical information at all times.
- Advise FSCOORDs/FSCs/FSEs on FA organization for combat to include TA assets, positioning of FA units, allocation of ammunition, priorities of fires, target selection standards, and commander's attack guidance/criteria.
- Develop the FA support plan in parallel with the force main CP, complying with force HQ instructions and the FA commander's/CofS's/XO's guidance.
- Monitor the operations of the supported force, subordinate elements, and units to the flanks with emphasis on friendly force and enemy FA dispositions and capabilities. Expeditiously inform other staff sections of changes in unit status or missions.
- Assess and monitor the status of current and projected FA capabilities. This includes the adequacy of current FA support and potential future requirements, such as ammunition and communications requirements, combat loss replacements, etc. Advise the FA commanders/FSCOORDs/FSCs/FSEs accordingly.
- Issue FRAGOs/WARNOs and review subordinate unit plans and orders.
- Supervise modifications of the FA support plan.
- Plan and coordinate moves of GS, GSR, and other units as appropriate in support of current operations.
- Perform alternate CP functions to enable the supported FA or maneuver unit to sustain operations until surviving elements can be reconstituted to reestablish critical C2 functions.

- Provide survey support through collocated survey planning and coordination elements (SPCEs) to facilitate survey planning, coordination, and execution.
- Conduct FA tactical and digital rehearsals.
- Coordinate and control the fires of organic, attached, and reinforcing FA units.

G2/S2 FUNCTIONS AND RESPONSIBILITIES

4-23. FA intelligence officers are responsible for collecting, analyzing, and disseminating FA relevant information about the enemy and the terrain and providing the commander and CP staff a coherent, timely, and understandable picture of the battlefield. This picture should clearly portray enemy actions and intentions to facilitate the FA decision-making process and an analysis of available options. During the planning, preparation, and execution phases, they develop and update the FA-focused IPB and intelligence estimate and prepare and monitor reconnaissance and surveillance plans in support of FA operations in conjunction with the G3/S3. FA G2s/S2s rely heavily, though not entirely, on ACE intelligence products and supported maneuver unit G2s/S2s. Their primary focus is on the enemy's FS system, and other HPTs, friendly FA survivability and mobility issues, and the dissemination of relevant information to other staff elements and subordinate commands. In addition, FA G2s/S2s control FA TA assets organic to, attached to, or reinforcing the corps arty, div artys, or FA brigades.

4-24. Although targeting is primarily a FS function for corps and division main CPs, FA G2s/S2s play a limited but important role in the targeting process. They conduct the FA IPB in parallel with the supported maneuver unit and develop FA HPTs throughout the width and depth of the battlefield for attack by corps arty, div arty, and FA brigade assets. They focus on targets with the greatest impact on planned operations and assess the effects of enemy, terrain, and weather on subordinate artillery units. The process is addressed in detail in FM 6-20-10. Specific highlights in support of the overall FA decision-making process are also noted in Chapter 6.

G4/S4 FUNCTIONS AND RESPONSIBILITIES

4-25. G4s/S4s within corps artys, div artys, and FA brigades are primarily planners. They are responsible for establishing and maintaining an awareness of the command's logistic capabilities and limitations through logistic preparation of the battlefield (LPB) and development of the logistic estimate. Further, they coordinate FA logistic requirements (arming, fueling, fixing, moving, and sustaining soldiers and their systems) and assist subordinate FA units in resolving problems. They are also responsible for the organization, security, and employment of the ALOC (when established). In close coordination with G3s/S3s, they ensure that selected COAs are logistically sustainable and assist in the preparation of the FA support plan and administration- logistic (admin-log) tab. If not, they advise TOC planners accordingly. G4s/S4s interactions with G2s/S2s provide them with the required intelligence to forecast losses and subsequent resupply needs based upon the concept of operations. They monitor any friendly force information requirements (FFIR) and essential elements of friendly information (EEFI) concerning their areas of

responsibility and immediately update the commander and TOC when new information is received. They monitor and evaluate CSS reports submitted by major subordinate commands and attached units to include command regulated pacing items such as ATACMS and coordinate logistic support operations for subordinate FA units with corps or division G4s and appropriate corps support command (COSCOM) and/or division support command (DISCOM) elements. Special attention is given to augmenting divisional and FA brigade CSS capabilities with corps logistic assets to meet the requirements of corps arty units attached to divisions or operating out-of-sector. They continually assess the situation, anticipate units' needs, and prepare to push support forward. Anticipating requirements is the key to successful CSS.

G1/S1 FUNCTIONS AND RESPONSIBILITIES

4-26. G1s/S1s have staff responsibility for personnel services, general administration, and public affairs with specific details reflected in unit TSOP. They share responsibility with the G4s/S4s for ALOC operations. They develop and maintain the personnel estimate and assist in the preparation of the FA support plan and admin-log tab. In the process, they assess the personnel supportability of friendly COAs and ensure that personnel operations are fully integrated into the overall FA support plan. They must stay aware of any FFIR and EEFI concerning their areas of responsibility and immediately update the commander and TOC when critical new information is received. Their focus is on:

- Strength accountability.
- Casualty reporting.
- Replacement operations.
- Administrative services.
- Personnel actions.
- Coordinating legal personnel services.
- Postal services.
- Finance services.
- Enemy prisoner of war (EPW) operations.
- Combat health support.

TACTICAL OPERATIONS CENTER FUNCTIONS AND RESPONSIBILITIES

GENERAL

4-27. TOCs are the core C2 element within FA CPs, requiring assured communications with higher, subordinate, and adjacent elements for effective operations. Supervised by the G3/S3, they integrate FA operations, targeting, and attack elements and synchronize the execution of FA missions. They include the command group (when not forward) and three major functional subdivisions. In corps artys, these are the operations and intelligence, fire control, and plans cells. In div artys and FA brigades, they are the operations, fire control, and targeting elements. TOCs must aggressively seek information about the current tactical situation (friendly unit locations, obstacles, and

cleared lanes, bypassed units, etc.), while disseminating this information to all subordinate and supporting units in a timely manner. Specific duties of each cell/element for each echelon of command are noted in Sections II-IV below.

LIAISON OPERATIONS

4-28. Liaison officers (LNOs) facilitate the exchange of information. They are tasked with general coordination instructions in the parent unit's SOP and with specific coordination instructions each time they are dispatched. Their role as their command's representative requires LNOs to know all unit plans and dispositions. They ensure that critical information is passed between their parent headquarters and the headquarters to which they are dispatched.

4-29. FA is primarily concerned with higher-to-lower and supporting-to-supported liaison relationships. Many of the other principles for establishing liaison such as rear-to-front and left-to-right do not ordinarily apply. In addition, maneuver force FSEs rather than dedicated liaison teams often meet FA liaison requirements in support of maneuver units. Most other liaison requirements involve liaison with other artillery units. The number and type of these requirements varies depending on the echelon of command and the tactical situation. Requirement details can be found in Appendix F.

SIGNAL OFFICER/COMMUNICATIONS PLATOON

4-30. In addition to leading the communications platoon, signal officers exercise technical supervision over the installation and use of communications systems and the activities of communications personnel. They advise the commander and staff on all signal matters and conduct specific duties as directed by the G3/S3. To support TOC operations, they provide communications from higher-to-lower, supporting-to-supported, reinforcing-to-reinforced, and left-to-right (facing the FLOT). In addition, they:

- Advise commanders on all matters pertaining to communications to include reconnoitering possible CP locations, electronic counter-countermeasures (ECCM), EW, and the use of signal activities for deception.
- Plan, direct, and supervise the installation, operation, and maintenance of command communications systems, networks, and facilities, and their efficient operation. They also recommend retransmission equipment employment, establishment of messenger services and schedules, and monitor communications security.
- Coordinate the activities of supporting, supported, or adjacent signal elements in support of command signal operations.
- Prepare the communications and electronics (C-E) tab to the FA support plan. They provide input for the preparation and distribution of SOI and cryptographic instructions.
- Request and manage assigned frequencies to reduce electromagnetic radiation interference.
- Monitor the assignment of signal personnel and equipment in coordination with respective subordinate FA units.
- Coordinate C-E training in support of command activities.

- Ensure timely availability of organic and supporting communications assets to establish and check systems and circuits prior to and after displacements.
- Restore disrupted communications.
- Coordinate with the next higher HQ on problems that cannot be resolved locally and that would limit the unit's mission capability.
- Gain access to and coordinate civilian telephone assets.
- Assist the HHB commander position and secure MSE SENs, and provide logistic support (less electronic maintenance).

ADMINISTRATION AND LOGISTIC OPERATIONS CENTER FUNCTIONS AND RESPONSIBILITIES

GENERAL

4-31. Since corps arty, div arty, and FA brigade HQ have no organic CSS assets, CSS staff officers do not directly control support activities. Their primary role is to assist in planning, coordinating, monitoring, reporting, and expediting CSS operations in support of subordinate FA units and to maintain an accurate status of personnel, equipment, and logistics within their command. For example, while divisional forward support battalions (FSBs) execute resupply operations, div arty CSS staffs should monitor all logistic activities for subordinate elements and forecast and coordinate CSS requirements for artillery units in GS of the division. They advise the TOC on operational issues affected by personnel, equipment, and logistics. As the nerve center for CSS operations and subject to METT-TC conditions, the ALOC may be collocated with the FA TOC or position itself within responsive supporting distance to subordinate command elements and supporting agencies. Like the TOC, it must be positioned where it has communications, accessibility, and survivability. Depending on echelon, it may be collocated with COSCOM or DISCOM elements. The G4/S4 is responsible for ALOC operations, movement, and security with the assistance of the G1/S1.

ALOC CSS OPERATIONS

4-32. The CSS staff must ensure that support is available at times and places required and that CSS operations are fully integrated into unit FA support plans. CSS staff members must act rather than react to support requirements. Personal involvement, awareness of the tactical situation, and on-scene appraisals are critical to mission accomplishment. Problems must be aggressively resolved in coordination with individual reporting FA battalions and brigades and supporting CSS organizations. To streamline CSS operations, each FA echelon should have detailed SOP prescribing times and formats for submitting required CSS-related reports to parent organizations. These reports are critical in providing the force artillery staff and ultimately commanders an accurate overview of the CSS status of their units.

4-33. Cross talk between the TOC and the ALOC is essential to establish and maintain full combat potential. When not collocated with the TOC, the ALOC should send a representative to the TOC at least once daily to ensure that all overlays, changes to plans, and current/projected changes in equipment and personnel status are updated. Any change in the main effort should be reported

to the ALOC by the TOC. Similarly, any major changes in the ability of the CSS system to support an operation must be immediately reported to the TOC.

SPECIAL STAFF WITH CSS RESPONSIBILITIES

4-34. Although overall staff responsibility for CSS activities rests with G1s/S1s and G4s/S4s, special staff officers assist them in selected CSS areas. These special staff officers and their CSS duties are:

- Surgeon/physicians assistant (when authorized) - coordinates and monitors Class VIII (medical supplies) and combat health support.
- Signal officer - coordinates and monitors signal maintenance.
- NBC officer or noncommissioned officer (NCO) - coordinates decontamination support and forecasts NBC-related supply requirements.
- Chaplain - monitors Class VI (personal demand items), morale support, and personnel actions.
- Staff judge advocate – provides operational law advice, and either provides or coordinates legal support in military justice, international law, administrative law, civil law (including contract law, fiscal law, and environmental law), claims, and legal assistance. In addition, the US Army Trial Judiciary and US Army Trial Defense Service, two independent legal organizations, provide military judge and trial defense services, respectively.

SECTION II - CORPS ARTY CP OPERATIONS

GENERAL

4-35. Corps arty CPs are primarily concerned with operational control of subordinate elements during current operations and the planning of future FA operations. CPs are normally located in the vicinity of the corps main CP and rear division boundaries. Specific responsibilities for TOC and ALOC operations are noted below.

TACTICAL OPERATIONS CENTERS

4-36. Corps arty TOCs assist corps arty commanders in the control of FA cannon, rocket and missile delivery systems, and other FA assets retained under corps arty control and not assigned or organic to maneuver units. TOC personnel plan FA fires, monitor ammunition status, and coordinate the positioning and movement of FA units. They develop corps FA support plans and orders and disseminate them to subordinate FA units as part of the force commander's FS plan/OPLAN/OPORD. They receive requests from lower echelons for additional FA fires and process them for engagement. TOC cells executing functions in support of the corps mission include:

OPERATIONS AND INTELLIGENCE CELL

4-37. This cell is concerned mainly with coordinating FA fires in support of current operations. Specific duties are to:

- Develop targets and potential targets from available intelligence.

- Interface with the corps G2 and FAIO to integrate FA targeting requirements into the overall corps collection plan.
- Determine FA targeting information required by the TOC and pass requirements to the corps G2 and FAIO.
- Supervise CTAD operations.
- Coordinate through FSEs the positioning of GSR and GS FA units.
- Maintain the current status and capabilities of all organic, attached, and reinforcing FA units and recommend their organization for combat.
- Work with the G2 to develop and perform target value analysis (TVA).
- Assist in developing target selection standards (TSS), HPTL, and attack guidance matrix (AGM) products.
- Disseminate FA support plans and prepare and modify orders and reports, as required.
- Maintain current information on the tactical situation and battle plan of supported unit(s) to include FS and airspace coordination measures.
- Receive and disseminate ROE, FSCMs, maneuver graphics, and nuclear and chemical strike warning messages.
- Coordinate chemical decontamination and other chemical defense measures.
- Provide the TOC fire control cell (FCC) FA data on planned, current, pending, or changing missions. Inform other staff sections to include the ALOC of changes in the status of supported units requiring changes in FA support.
- Coordinate AO survey requirements with the SPCE.
- Coordinate met requirements and ensure computer, ballistic, and TA met data are disseminated to all organic, attached, and reinforcing FA units.
- Plan and control tactical movements, coordinate routes, and expedite ammunition supply operations.
- Coordinate all corps arty intelligence activities and disseminate information in accordance with unit SOP.
- Assemble and disseminate EEFI, priority intelligence requirements (PIR), and FFIR.
- Integrate IPB products into current and future plans and make modifications as required.
- Maintain classified HQ files.
- Act as force artillery command net control station (NCS).

FIRE CONTROL CELL

4-38. This element is tasked with providing timely and effective tactical fire control in support of current operations. Duties are to:

- Analyze targets produced by target production sections or passed by FSCs/FSEs for attack by FA systems. Ensure consideration of commander's attack criteria, method of fire, and types of munitions needed.

- Schedule planned FA fires.
- Disseminate target lists and schedules.
- Clear fires.
- Initiate fire requests for additional FA support or support by non-FA FS means.
- Assist the operations and intelligence element in scheduling fires and maintaining target lists.
- Maintain the fire control map.
- Act as NCS for force artillery fire nets.

PLANS CELL

4-39. Functions for this element are to:

- Develop the FA support plan.
- Develop contingency plans in support of future operations and coordinate with higher, adjacent, and subordinate units.
- Develop logistic requirements with the G4/S4.
- Develop and wargame COAs and various contingencies in support of FA operations.
- Maintain the planning map.

SURVEY PLANNING AND COORDINATION ELEMENT

4-40. The mission of the corps arty SPCE includes the following functions (for additional details see FM 6-2, *Tactics, Techniques, and Procedures for Field Artillery Survey*):

- Coordinate survey requirements of artillery and non-artillery units and extend survey control across the corps from higher-to-lower echelons. The goal is to establish survey control before occupation by firing or TA elements.
- Ensure that each weapon and target-locating system within corps and subordinate division boundaries is on the same survey control. A topographic company that is normally attached or OPCON assists the SPCE to each corps. This topographic company maintains an element at the corps TOC for rapid response and special-purpose support.
- Develop the survey plan and recommend survey priorities.
- Maintain maps and overlays to show completed, in-progress, and planned surveys.
- Record all survey control points, benchmarks, and adjacent corps tie-in points established by topographic engineers, and div arty/corps TAB/CTAD survey sections.
- Disseminate survey data over appropriate communication means and published triangulation (trig) lists.
- Coordinate survey requirements with the theater topographic engineer battalion for extending or establishing survey control for the corps.

LIAISON SECTIONS

4-41. Corps arty liaison requirements are substantial. Corps arty CPs should establish liaison with div artys and subordinate FA elements such as FA brigades if corps artys retain direct control over their fires (higher-to-lower). This is particularly critical if allied artillery units are under corps control. Physical liaison is not an absolute requirement if other communications are adequate or if supported and supporting CPs are collocated. However, the dispatch of liaison teams is preferred if distances between CPs prevent routine face-to-face contact between operations officers.

4-42. Corps artys are required to provide an FSE for corps rear CPs. In the absence of TOE authorizations, corps arty commanders generally use a liaison team to meet this mission requirement. In addition, the corps must provide liaison to joint or allied force battlefield coordination detachments (BCDs).

CORPS ARTY ADMINISTRATION AND LOGISTIC CENTER

4-43. Corps arty ALOCs are normally under the direct supervision of the G4 with the G1 serving as his deputy. If not collocated with the TOC, they are frequently located near or within the corps rear CP to facilitate coordination. If not collocated, an ALOC liaison team may also be dispatched to the corps arty TOC to facilitate planning and coordination with G3/G2 elements.

G4 SECTION

4-44. This section coordinates and directs the execution of corps arty logistic activities with responsibility to:

- Coordinate and prioritize issue of all classes of supply, maintenance assistance, and recovery support for subordinate elements in accordance with priorities established by the G3.
- Coordinate with corps materiel management centers (MMCs) on logistic requirements in support of FA organizations for combat, positioning, and unit movements. This may require augmenting division CSS capabilities with corps logistic assets to provide effective support to corps FA brigades and battalions attached to divisions, particularly when these units are equipped with weapons and equipment not organic to the supported division.
- Write the admin-log tab to the corps FA support plan with input from the G1.
- Prepare and submit required logistic reports to the supporting COSCOM in accordance with applicable SOP.

G1 SECTION

4-45. The G1 section provides the corps arty commander advice and recommendations on all matters pertaining to personnel administration and management and assists the G4 in writing the admin-log tab to the FA support plan. In addition to the duties listed in Section I above, the G1 will administer US and non-US civilian employment programs using potential labor sources in the combat area.

SECTION III - DIV ARTY CP OPERATIONS

TACTICAL OPERATIONS CENTER

4-46. Under the supervision of the div arty S3, the TOC plans, directs, coordinates, and controls the fires of all organic, attached, and reinforcing FA units supporting the division. Composed of operations, fire control, and targeting elements, the TOC develops FA support plans and ensures that available firepower adequately supports the division battle plan. The div arty S2 is charged with performing a FA-focused IPB, providing target intelligence, and assisting with TVA. Intelligence will be extracted from intelligence estimates and reports and disseminated to subordinate and supporting organizations.

OPERATIONS ELEMENT

4-47. The operations element is primarily concerned with the execution of current operations. It plans, directs, coordinates, controls, and monitors the status of all organic, attached, and reinforcing FA units. FA brigade LNO(s) at the TOC will keep attached or reinforcing FA brigades apprised of the current situation, plans, ROE, and the force/div arty commander's guidance.

FIRE CONTROL ELEMENT

4-48. The FCE performs tactical fire control. It assigns fire missions primarily to R, GSR, and GS firing units for immediate or future attack and determines type and amount of ammunition to be expended to achieve effects specified in the commander's attack criteria. In addition, the cell initiates requests for counterfire, EW, close air, and naval gunfire and passes them to the division FSE. It keeps attached/reinforcing FA brigades informed of targets and target indicators.

TARGETING ELEMENT

4-49. The targeting element is supervised by the counterfire officer and is composed of target production and order of battle (OB) sections. These sections are responsible for collecting, processing, and disseminating targeting information for engaging enemy targets by fire. The div arty S2, with the assistance of the counterfire officer, will also develop and disseminate enemy artillery OB and coordinate plans for the emplacement of division radars.

Target Production Section

4-50. Target production sections are augmented by personnel from the processing section of the TAB in heavy divisions. In non-mechanized divisions, the processing section of the reinforcing CTAD provides assistance. Efforts are focused on target information obtained from FA TA assets (primarily AN/TPQ-36/37 radars) or from the OB section. The section also plans, coordinates, and controls the employment of FA TA assets not attached to subordinate elements. Specific functions call for the section to:

- Recommend and coordinate sectors of search within the division area and adjust coverage by FA TA resources as the situation develops. Special consideration is required to maintain coverage of CFZs/CFFZs when

attached or when their DS artillery battalions displace their organic AN/TPQ-36 radars.

- Monitor the operation of organic and augmenting FA TA resources.
- Develop targets and suspect targets and refine target locations.
- Pass targets produced by the section to the FCE for attack.
- Maintain the target production map and the artillery target intelligence file in automated targeting systems.
- Maintain current target cards when operating in a non-automated environment.
- Request BDA on targets produced and passed to the FCE for attack.
- Act as NCS for the force artillery TA command and intelligence net.

OB Section

4-51. Under the supervision of the div arty S2, this section focuses on enemy artillery OB and intelligence information received from other sources to generate artillery target intelligence. Specific functions are to:

- Develop enemy artillery OB and maintain the OB map, workbook, and duty log.
- Predict target locations and pass them to the target production section.
- Prepare and disseminate target intelligence reports and pass other intelligence to appropriate agencies.
- Monitor enemy FA tactics and techniques.
- Request BDA reports.

Other elements normally collocated with or near the div arty TOC and supervised by the div arty S3 include:

SURVEY PLANNING AND COORDINATION ELEMENT

Heavy Division

4-52. The SPCE consists of the reconnaissance and survey officer and chief surveyor who supervise two PADS teams and one conventional survey team. The primary mission of div arty survey is to establish battalion survey control points and an orienting line for assigned or attached firing and target-locating units. The primary mission is to provide support to AN/TPQ-37 Firefinder teams. This is done with existing trig lists or from division survey control points (SCPs) established by topographic surveyors. The secondary mission is to recover and verify existing survey control and to provide survey tie-in points to adjacent division areas. Division SPCEs are normally supported by an attached or OPCON topographic detachment. Time permitting, they assist FA battalion surveyors. Specifically, the SPCE:

- Ensures a common grid is available throughout the division area of operations to permit the massing of fires, the delivery of surprise observed and effective unobserved fires, and the transmission of target data from one unit to another.
- Coordinates survey operations with higher, lower, and adjacent units.

- Establishes survey priorities in accordance with the commander's intent.
- Requests external survey support and information from the engineer topographic company supporting the corps through the corps arty SPCE.
- Selects sites for declination stations.
- Maintains maps and overlays of completed, in-progress, and planned surveys.
- Disseminates survey information to organic teams including starting survey control and tie-in point data.
- Gathers, evaluates, and compiles survey control established by organic teams.
- Provides survey control to other users (intelligence and EW, OH-58D, mortars, etc.) according to survey priorities and recovers existing survey control points.

For further details on div arty survey operations, see FM 6-2.

Light, Airborne, And Airmobile Division SPCE

4-53. As indicated in Chapter 2, div arty survey sections in airmobile, airborne, and light infantry divisions consist of two PADS teams. Since there are no survey officers in these div arty survey sections, the SPCEs consist of three enlisted personnel. However, responsibilities and basic functions of the PADS teams and the SPCE are the same as those in heavy div artys.

MET SECTION

4-54. Div arty TOCs plan and coordinate met support for the division. Met sections are responsible for positioning sections to measure the atmosphere for the largest possible number of firing units, taking into account prevailing winds, terrain, time, security, and the tactical situation. For detailed information, see FM 6-15, *Tactics, Techniques, and Procedures for Field Artillery Meteorology*.

DIV ARTY SIGNAL OFFICER/COMMUNICATIONS PLATOON

4-55. The platoon is designed to support the communications requirements of the div arty CP and execute the div arty C-E plan. The signal officer performs functions as noted in Section I.

LIAISON SECTION

4-56. This section is responsible for establishing communications and coordinating FA matters with adjacent and supported units. When directed, LNOs exchange data and coordinate fires across division boundaries. Similar to corps-level operations, most of the div arty's liaison requirements are dealt with by FSEs. In selected cases, div artys may be required to establish additional liaison links e.g., when the division is in reserve and the div arty is given a reinforcing mission or is placed in corps GS. Also, when a FA brigade reinforces the div arty, reciprocal liaison should be established.

AERIAL FIRE SUPPORT OBSERVERS

4-57. The controlling artillery CP will determine the employment of aerial fire support observers (AFSOs) in combat. AFSOs should be briefed concerning the following:

- Areas and type of TAI, along with FSCMs and boundaries.
- Required time of surveillance.
- Required radio frequencies, COMSEC equipment, call signs, maps, and photographs.
- Planned targets and reference points.
- Target-marking SOP if AFSOs are assigned to OH-58D helicopters.
- Laser codes for Copperhead, Hellfire, and laser-guided munitions.
- Available FS means to include points of contact and location.
- Procedures for requesting SEAD.
- Locations of enemy AD in area.

TARGET ACQUISITION BATTERY

4-58. The TAB, as part of the armored and mechanized infantry division's MLRS battalion, provides a critical TA capability. It locates targets and provides combat information and impact data to register and adjust FA cannons. The TAB assistant counterfire officer and target production section are normally part of the div arty's TOC targeting cell to assist the div arty counterfire officer. C2 of the radars can be centralized at div arty, decentralized by attaching radar sections to subordinate FA battalions, or a combination of both. If the counterfire role is assigned to a reinforcing FA brigade, div arty counterfire assets will be shifted to augment FA brigade counterfire operations.

SECTION IV - FA BRIGADE CP OPERATIONS

TACTICAL OPERATIONS CENTERS

4-59. FA brigade TOCs control and coordinate the operations of subordinate FA battalions. Under the supervision of the brigade S3, they integrate fire planning, operations, target production, FA OB, and information from all intelligence sources. Since brigade TOEs do not authorize an assistant S3 plans, one of the operations or intelligence officers may be required to perform planning functions. When required, FA brigades in a GS role will assume corps arty responsibilities as alternate CP as indicated in the FA support plan. Responsibilities for the three TOC sections are as follows:

OPERATIONS ELEMENT

4-60. The operations element is concerned mainly with current operations, coordination, and the development of plans to support future operations.

FIRE CONTROL ELEMENT

4-61. This element controls the delivery of tactical FA fires in support of current operations. In the process, the FCE:

- Uses the commander's attack guidance to analyze targets for attack.
- Disseminates FA targets to appropriate firing elements.
- Requests the attack of targets by nonorganic systems, as required.

TARGETING ELEMENT

4-62. Similar to div arty TOCs, the targeting element is organized into a target production section and an OB section. Manning is minimal. If the brigade CP assumes the counterfire function or is tasked with any substantial responsibility for targeting, it must be augmented. Usually a heavy div arty will provide the target processing section and a number of radars from the TAB, or the corps may attach a CTAD. If the brigade is the force FA HQ in DS of a maneuver unit, this augmentation is normally provided from corps arty or div arty/corps-controlled TA assets. In that case, the FA brigade as outlined for the divisional targeting element and target production section will assume responsibilities for counterfire operations.

4-63. As noted under corps arty and div arty discussions, selected HQ elements fall under the direct supervision and control of the CofS/XO or S3 in the TOC. In case of FA brigades, these include:

LIAISON SECTION

4-64. Liaison teams represent their brigade commander when placed with supported or reinforced units. They are tasked to ensure a timely exchange of information or to form the nucleus of an FSE, when necessary.

4-65. FA brigades have the most varied and least predictable liaison requirements. Because of limited resources in the face of potentially extensive on-order missions, brigade commanders must regularly prioritize liaison requirements and often rely on electronic liaison. The brigade usually maintains physical liaison with corps arty and with supported maneuver and FA units. Full-time liaison with units having on-order commitments will depend on the criticality of that mission and the likelihood of execution. See Appendix F for additional details.

SURVEY PLANNING AND COORDINATION ELEMENT

4-66. FA brigade SPCEs coordinate survey operations for subordinate elements in support of corps arty and div arty survey plans. Since FA brigade SPCEs have no organic survey teams, coordination for brigade survey requirements gains increased significance. When brigades are assigned a DS mission, the SPCE mission is similar to that of the div arty SPCE and includes coordination of survey requirements with the corps arty SPCE. When the brigade is assigned an R, GSR, or GS mission, it coordinates survey requirements with the supported artillery unit's SPCE.

MET SECTION

4-67. Operations of FA brigade met sections are usually coordinated with the S3 of the supported div arty or the div arty in whose area the brigade operates when in corps GS.

HEADQUARTERS SUPPORT SECTION

4-68. The HQ support section corresponds to the ALOCs of the other HHBs. It accomplishes the brigade's administrative and logistic staff functions.

SECTION V - FA RELATIONSHIP AND INTERFACES WITH EXTERNAL FS AGENCIES

GENERAL

4-69. FA is but one element of a larger FS system integrated in corps and division main, tactical, and rear CPs. An understanding of the various FS elements and associated functions and responsibilities may, therefore, assist in placing the FA's role and battle contributions into better perspective. The following paragraphs briefly address functions and responsibilities of corps FSCs, division FSEs, and DOCCs. Further details can be found in FMs 100-15, 6-20-30, and 71-100.

FORCE FIRE SUPPORT CELLS/ELEMENTS

CORPS MAIN CP FSC

4-70. Corps main CPs control all aspects of corps and division battles, processing input from higher, lower, and adjacent units. The corps FSC, as a major entity of the corps main CP, manages FS resources under the FSCOORD's supervision. It is staffed with representatives from corps arty and corps aviation, AD, engineer, chemical support, and EW elements. In addition, representatives from the following sections are normally collocated with the FSC: signal officer, air support operations center/air liaison officer (ASOC/ALO), and naval LNO.

4-71. FAIOs representing the FSC within the ACE pass target nominations to the appropriate FSE for engagement. They are a vital link in the attack of HPTs and may pass identified HPTs and other targets directly to corps/division FSC/FSEs or with approval directly to the firing unit.

DIVISION MAIN CP FSE

4-72. The division FSE is a subordinate element of the G3 cell within the division main CP. It is the focal point for planning, coordinating, and integrating all FS for division operations under the supervision of the DFSCOORD. The FSE is manned by div arty personnel, the assistant division engineer, the electronic warfare officer (EWO), and representatives from the tactical air control party (TACP), AD element, and division aviation. The div arty section within the FSE works for and responds directly to the division G3 in support of the division battle. It is responsible for all FSE functions to include coordinating the activities of the other FSE sections. The FSE is responsible for the allocation of FA resources and establishing FA priorities in support of decisive, shaping, and sustaining operations.

4-73. FSEs at tactical and rear CPs are extensions of the main CP FSE, assisting the main FSE in controlling assets engaged in close and rear operations. The tactical CP FSE coordinates FS for close operations. It also coordinates and implements the FS plan developed by the main CP FSE,

responds to additional requests for FS, and identifies FS requirements for immediate and near-immediate tactical situations. It maintains the location and status of all FS assets supporting close operations with priorities based on decisions by the G3, assistant division commander-maneuver (ADC-M), or command group. Division rear CP FSEs are composed of div arty personnel designated by the div arty commander.

DEEP OPERATIONS COORDINATION CELLS

CORPS

4-74. A single organization at corps and division level is doctrinally responsible for planning and synchronizing deep operations to ensure unity of effort and full integration of all capabilities. This organization is the DOCC. DOCCs at corps and division are responsible for planning operational and tactical-level deep fires to include airspace coordination, target acquisition and deconfliction, and FS coordinating measures within corps and division AOs. FS responsibility forward of division AOs belongs to corps DOCCs. As the focal point for deep operations, they are one of the primary interface points for corps arty and div arty TOCs.

4-75. DOCC functional area members may either collocate in a cell or use scheduled meetings, briefings, or local area networks (LANs) to perform DOCC responsibilities in addition to their primary functions. Key participants are selected corps and division staff members to include plans, operations, intelligence, FS, ADA, army airspace command and control (A2C2), special operations, Army aviation, and CSS elements. Additional support will be provided by the ALO, other joint service members, and allies. The DOCC also maintains a close interface with the BCD, AOC, and joint targeting coordination board (JTCB). For further information, see FM 6-20-30.

Functions

4-76. Corps deep operations are directed against enemy forces and functions not engaged in the close battle. Successful deep corps operations require the careful and continuous synchronization of activities between the corps G2, G3, EWO, aviation brigade, FSE, AD element, A2C2, AOC, and other agencies.

4-77. Army doctrine notes that ad hoc cells are inefficient in planning and executing the corps deep battle. The solution is to form a DOCC normally in the corps main CP with the mission as C2 facility to support deep operations.

Within the main CP, DOCC members position themselves to track the status of close and rear operations and continually assess their correlation with deep operations.

4-78. The DOCC confirms and validates targeting data, determines if the current decide criteria for the target remains valid, and allocates attack resources to engage the target. The DOCC must also coordinate the allocation of intelligence and EW assets to perform BDA for deep operations early in the planning process.

DIVISION DOCC

4-79. At division, as at corps level, deep operations are normally planned and controlled where the most information is available: the command's main CP. The DOCC helps the commander focus activities of all units, agencies, and cells involved in supporting deep operations. It operates under the supervision of the division CofS. The division commander determines the configuration of the DOCC based on mission requirements, available personnel, and equipment capabilities. Linking selected staff members from the appropriate main CP cells either physically or electronically may form the DOCC. The G3 assists in coordinating the deep operations. However, the DOCC is not an ad hoc organization, but a trained entity capable of continuously synchronizing all BOS. It normally consists of representatives from div arty, G2 and G3 planners, aviation personnel with additional support from EWO, ADA officer, ALO, G3 air, PSYOP, SJA, and civil affairs representatives as required.

4-80. The DOCC plans, synchronizes, and identifies HPTs to be tracked and attacked. It monitors and supports the execution of deep operations. In addition, it monitors close and rear operations and continually assesses their relationship to deep operations. The overall responsibility for the synchronization of all operations -- deep, close, and rear -- remains with the main CP.

Chapter 5

Field Artillery Combat Service Support

The most challenging task for corps arty, div arty, and FA brigade CSS staffs is the identification, coordination, and delivery of required CSS assets to subordinate formations at the right time and place and in the proper condition. This includes preparing force artillery formations for operations, deploying them to the operational area, supporting them during operations, and redeploying them when missions have been achieved. Associated FA CSS operations must be tailored to synchronize and integrate FA support and operational functions to sustain soldiers and their weapon systems during the delivery of FA fires in support of close, deep, and rear operations. This chapter, therefore, addresses FA focused CSS characteristics and functions, LPB, and the logistic estimate.

COMBAT SERVICE SUPPORT CHARACTERISTICS

5-1. The tenets of Army doctrine -- agility, initiative, depth, versatility, and synchronization -- also establish the CSS framework. Sustainment of combat operations requires adherence to certain CSS characteristics that apply to all organizations but are especially critical for nondivisional artillery units. Lacking sufficient organic means to sustain themselves, commanders and CSS staffs of nondivisional FA units must be aggressive in anticipating requirements. Continuous coordination with internal, COSCOM, and DISCOM agencies is essential to provide assurance that CSS support will be responsive and fully integrated into unit operations. For additional details see FM 100-7, *Decisive Force: The Army in Theater Operations*, and FM 100-10, *Combat Service Support*.

5-2. CSS characteristics that are essential for effective and efficient FA logistic operations include the following:

- Responsiveness. Responsiveness is the ability to adjust to changing requirements on short notice and to provide the right support at the right time. It is a key characteristic for FA formations whose missions may frequently change in response to an evolving friendly and enemy situation. Although the intent is to predict future operations accurately, combat operations often take unexpected turns. FA CSS personnel must be able to tailor available capabilities to meet changing priorities and types and quantities of support required with special focus on FA munitions, POL, and maintenance requirements for FA specific weapon systems across wide frontages.
- Simplicity. Simplicity means avoiding complexity in both planning and executing CSS operations. Mission orders, drills, rehearsals, and SOPs contribute to simplicity.

- Flexibility. CSS plans must be flexible enough to achieve both responsiveness and economy. Flexibility may include improvisation and anticipation. Improvisation is essential for continuous and responsive support as CSS staffs seek new and innovative solutions to problems and adapt to changing situations. Improvised CSS procedures can provide continuity of support when the preferred method is not usable to complete the mission. CSS staffs must clearly understand their commander's intent and anticipate future events and requirements as operations progress. Anticipation rests on the ability of CSS staffs to identify, accumulate, and maintain assets, capabilities, and information necessary to support combat operations. While monitoring and coordinating support for current operations, they must simultaneously plan future operations. For example, corps arty G4s should plan at least 48 to 72 hours into the future.
- Attainability. Attainability is generating the minimum levels of supplies and services to initiate operations. The commander determines the minimum acceptable level of support.
- Sustainability. Sustainability is the ability to maintain continuous support during all phases of a campaign or operation. Artillery Class V is a major determinant in evaluating sustainability.
- Survivability. Being able to protect support functions from destruction or degradation equates to survivability. Redundancy in support contributes to survivability.
- Economy. Economy means providing the most efficient support to accomplish the mission. Economy reflects the reality of prioritizing and allocating scarce resources. Availability of resources such as Class III and Class V have had major impacts historically on combat operations.
- Integration. FA sustainment operations to include development of support plans and responsive CSS structures must be closely integrated into the force and FA commander's overall scheme of operations and FS. CSS and FA tactical operations must be mutually supportive. This is crucial for generating the necessary combat power, flexibility, and greatest possible freedom of action.

COMBAT SERVICE SUPPORT FUNCTIONS

5-3. The five CSS characteristics translate into tactical-level applications that are focused on arming, fueling, fixing, moving FA formations, protecting CSS elements, and sustaining artillerymen and their systems. The major challenge in providing comprehensive and responsive mission support is to distribute available assets and to integrate all tasks effectively and efficiently. Included throughout are actions by the FA commander and staff to protect the sustainment system.

ARMING THE SYSTEM

General

5-4. During intense combat, arming the force is a critical, demanding, and time-sensitive CSS function. It is particularly critical for FA systems because of the high tonnage and sophistication of munitions. It calls for the effective

integration of supply, transportation, and maintenance functions. Successful ammunition resupply operations depend on a series of factors:

- Careful estimates based on usage, experience, and the anticipated intensity of combat. These should be prepared in support of each COA and further refined during wargaming and preparation of the admin-log tab to the FA support plan.
- A smooth flow of ammunition from supporting ammunition units directly to ammunition transfer points (ATPs) (supply point distribution) and/or FA firing points (throughput distribution).
- The ability of the FA TOC and force FSC/FSE to prioritize demands for critical ammunition based on the tactical situation.
- Establishment of orderly ammunition resupply routes.
- A clear definition of how and who will resupply nondivisional FA units.

Unit Basic Load

5-5. A unit's basic load (UBL) of ammunition is the quantity of ammunition authorized and required to be on hand to meet combat needs until resupplied. Basic loads are specified by theater army and for FA units, expressed in number of rounds by type ammunition per weapon. UBL size and composition is based on mission, enemy, and type of unit supported and normally varies from FA battalion to FA battalion. SOP should prescribe the distribution of basic loads.

5-6. For a deployed corps, basic loads must be transportable on user unit organic transportation. If a complete upload is not practical, basic loads should be stored under user control as close as possible. Units that are not uploaded should establish, review, and revise loading plans on a systematic basis. Div arty and FA brigade S4s must ensure that stored ammunition is identified, segregated by unit, and readily accessible. Additionally, div artys or FA brigades need to upload ammunition periodically to validate loading plans to ensure UBLs can be moved and secured.

5-7. Once engaged in combat, the UBL ceases to exist. Ammunition on hand in a unit then becomes a function of the required supply rate (RSR) for an operation and the CSR, if established. Units report specific numbers of rounds and types of ammunition on hand over advanced field artillery tactical data system (AFATDS) or initial fire support automation system (IFSAS) or the fastest other means. They also report these figures as part of any required logistic status (LOGSTAT) reports. Reports may state the percentage of required ammunition on hand or use a color-code system. Examples of the color-code system are:

- Green for more than 80 percent.
- Amber for 60 to 79 percent.
- Red for 40 to 59 percent.
- Black for less than 40 percent.

Required Supply Rate

5-8. The first step in FA ammunition planning in support of a specific operation is to determine the RSR. The RSR is defined as the estimated amount of ammunition to sustain a force in combat without restrictions for a specific

length of time. It is based on the type of operation to be executed, number of FA delivery systems to be armed, and number of enemy targets to be engaged. It is expressed in rounds per weapon per day for each munition fired by weapon systems.

5-9. FA ammunition planning factors in FM 101-10-1/2, *Staff Officers Field Manual - Organizational, Technical, and Logistical Data Planning Factors* or Department of the Army published expenditure rates are guidelines to develop ammunition requirements for planning. The resulting quantities must be modified based on experience. FA battalion S3s prepare the RSR for review by their battalion commanders and forward it through operations channels to the next level for consolidation, review, and further passage upward. Corps arty logistic and operations officers and FSCOORDs review FA RSRs submitted by div artys and FA brigades prior to submission to the ground component command.

Controlled Supply Rate

5-10. Ground component commanders (normally the Army service component commander [ASCC] or contingency corps commander) develop and announce theater-wide controlled supply rates (CSRs) on the basis of subordinate unit requirements (developed from RSRs), ammunition on hand, resupply capabilities (transportation, equipment, and personnel), and recommendations from the force G3, G4, and FSCOORD. CSRs set priorities for the distribution and expenditure of controlled ammunition items and are expressed in rounds per weapon per day. Corps or a higher HQ may further impose a CSR on FA brigades and div artys by unit and/or by operational phase and identify variances between RSRs and CSRs in the logistic portion of the FS/FA support plans. If a CSR falls significantly short of anticipated requirements, adjustment to the FA support plan and the overall scheme of operations may be needed.

Ammunition For Immediate Consumption

5-11. At times, FA units may be required to draw ammunition in excess of CSRs for a specific requirement such as a FA preparation. Ammunition may be issued for immediate expenditure or for firing within the next 24 hours. It is considered expended when issued. If circumstances preclude expenditure, excess ammunition is reported daily until it is expended or reallocated. Ammunition for immediate consumption or for contingencies to support a specified operation or unit may also be generated by internally controlling the amount of ammunition expended from the CSR. In addition, necessary savings can be achieved by reducing CSRs sent to subordinate units or by assigning nonstandard missions that limit unit CSR expenditures.

Combat-Configured Loads

5-12. Combat-configured loads (CCLs) are preplanned packages of ammunition transported as a single unit for routine resupply, yet flexible enough to provide for a variety of tactical operations. The mix of ammunition is predetermined and designed to support a specific type unit or weapon system. CCLs should be published in div arty and corps arty TSOP. CCLs not only speed the passing of resupply requirements but also improve the efficiency of DS and GS ammunition units. Instead of planning unique loads for each resupply mission,

DS or GS ammunition units can organize operations to rapidly prepare CCLs and ship them quickly when directed by corps MMCs.

5-13. The use of CCLs does not preclude ordering single Department of Defense identification code (DODIC) loads, which may be required for specific missions and contingencies. Ammunition constraints also may require use of single DODIC loads and limit use of published division or corps CCLs. Munitions not included in CCLs are moved to ATPs from ammunition supply points (ASPs) or corps storage areas (CSAs) on separate transportation assets as required. This may include various types of small-arms ammunition transported to ATPs on non-CCL trailers with mixed loads (five to 20 types) of ammunition. These non-CCL trailers are collocated at the ATPs but away from high volume transload operations associated with weapon systems such as 155mm howitzers. Small-arms ammunition can be included in artillery CCLs.

5-14. Div arty and corps arty commanders specify in paragraph 4 of the FS/FA support plan which CCL will be used by subordinate units. Actual requests follow standard ammunition request channels. Division ammunition officers (DAOs) review CCL selections and submit consolidated division CCL requests to corps. DAOs and corps arty G4s coordinate with corps MMCs to ensure selected CCLs flow to the right ATP at the proper time.

Resupply

5-15. Basic loads will initially sustain units until the ammunition resupply system becomes operational. Corps and division CSS organizations normally do not have sufficient organic transportation assets to distribute ammunition directly to using units. To do so would deprive other CSS customers of essential transportation support. As a result, FA commanders should not rely on external support for normal operations. FA battalions in heavy units usually pick up ammunition from ATPs or ASPs and deliver it to firing batteries using organic ammunition resupply vehicles. When FA battalions cannot resupply themselves adequately as in case of limited organic transportation assets in light, airborne, and air assault artillery units, divisions or corps elements are called upon to augment organic capabilities. Such requests are submitted to division transportation officers or the MMC of the appropriate corps or higher-level support command. To assist in alleviating transportation shortages, CSS planners can establish ATPs forward of corps ASPs to greatly reduce turnaround times.

5-16. Once the Class V resupply system is established, units will draw ammunition as authorized by CSRs. Divisional FA battalions normally draw ammunition from ATPs (see Figure 5-1) located in brigade support areas (BSAs). Nondivisional FA battalions may also draw ammunition from brigade ATPs if the corps has augmented divisional ATPs and if caliber-specific ammunition has been pushed sufficiently forward. If this is not the case, nondivisional FA battalions will draw ammunition from ATPs or ASPs located near division support area (DSA) rear boundaries as designated by the COSCOM commander in coordination with corps arty (see FM 6-20-1, *Tactics, Techniques, and Procedures for the Field Artillery Cannon Battalion* for distribution within FA battalions). FA battalions requiring large amounts of ammunition above and beyond CSRs for immediate consumption usually draw ammunition from the corps or DSA.

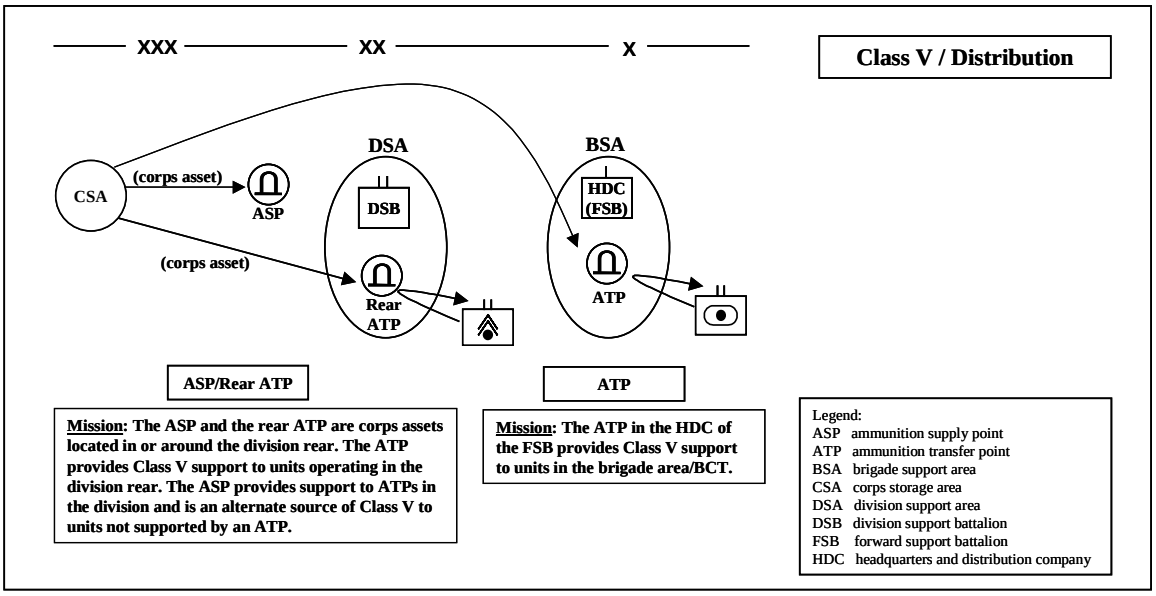

Figure 5-1. Arming the Force

5-17. If the system fails to function properly, FA battalion ammunition officers, service battery commanders, S4s, or XOs should resolve system failures face-to-face with appropriate CSS counterparts (e.g., ATP/ASP commanders, FSB support operations officers, DAOs, or DISCOM support operations officers) and simultaneously notify force artillery G4s/S4s for assistance. Prior planning by artillery G4s/S4s and their staffs on how to resolve system problems pays great dividends during execution. Anticipation and aggressive follow-through before and during execution are key to making the Class V system work properly.

5-18. An additional Class V resupply consideration is the wide variety of special-purpose ammunition developed for artillery (for example, ATACMS). With the exception of DPICM and high explosive (HE) ammunition, most artillery munitions are projected for infrequent or surge usage. Inaccurate predictions for use of special-purpose munitions lead to wasted effort and slow the Class V resupply system.

FUELING THE SYSTEM

General

5-19. Like arming, fueling requires a surge capability for fuels and packaged petroleum, oils, and lubricants (POL) products during combat operations. It affects equipment operations and force mobility, to include the movement of personnel, equipment, supplies, and units.

REQUIREMENTS DEFINITION

5-20. Like ammunition, the delivery of fuel establishes continuous resupply requirements and is essential to maintain the mobility of FA units. These requirements are based on forecasts provided by FA battalions in supply channels.

5-21. FA brigade logistic personnel consolidate and refine fuel consumption rates submitted by subordinate battalions based on experience and standard planning factors. These estimates must consider special factors that include terrain, weather, and the mission. When FA brigades are operating under division control, their forecasts are consolidated with the requirements of the div arty and forwarded by the supported div arty S4 to the division MMC. FA brigade and div arty units may draw fuel from the same bulk POL distribution points established by the DISCOM (see Figure 5-2). Alternatively, FA brigades may receive bulk fuel from corps support group (CSG) DS petroleum supply companies. When an FA brigade is not operating under division control, FA brigade requirements are forwarded to the COSCOM MMC. In reviewing and refining estimates, div arty and FA brigade S4s must consider special circumstances that could result in unusually high fuel consumption rates. For example, vehicles operating over hilly terrain consume more fuel than those operating on relatively level terrain do. FM 101-10-1/2 provides fuel consumption data to serve as a general guide; however, the data should be modified based on experience.

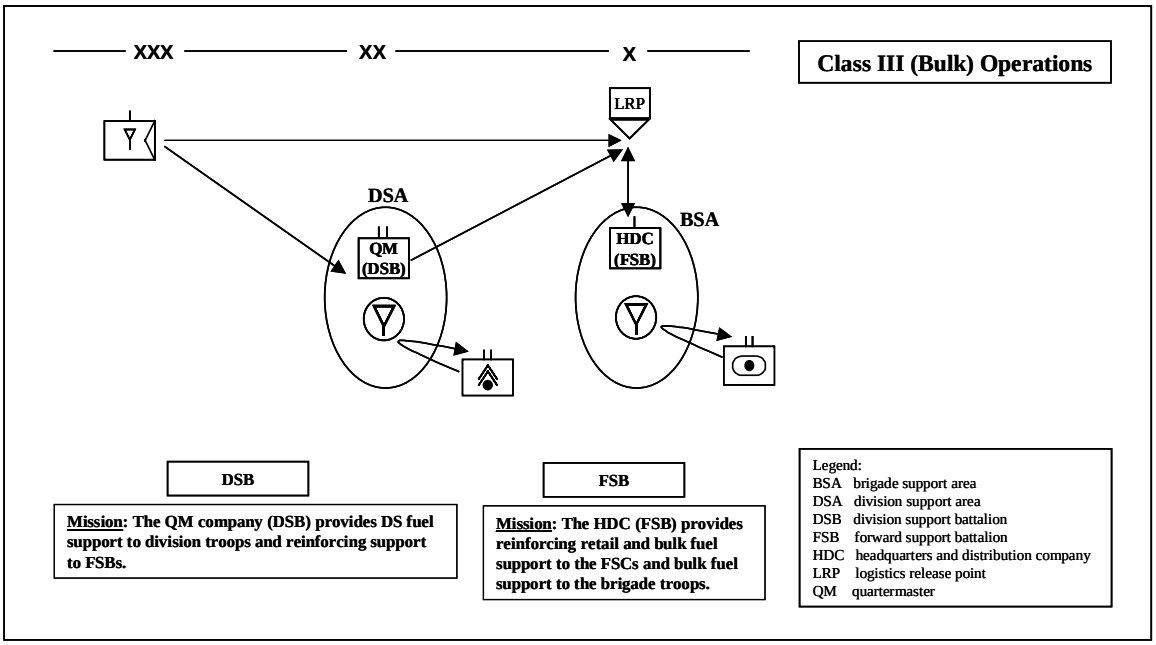

Figure 5-2. Fueling the Force

RESUPPLY

5-22. Once fuel requirements are forecast, FA brigade and div arty S4s determine if battalions can carry and distribute their own fuel in organic POL vehicles and trailer-mounted fuel pods. These can be positioned in combat trains, BSAs, or other locations relatively close to using units. With prior coordination, CSG DS petroleum supply companies may also provide tankers, collapsible tanks, or drums to supply nondivisional battalions.

5-23. As a general rule, COSCOM delivers bulk fuel to fuel distribution points in division and brigade support areas, using tank trucks, rail cars, pipelines, or

hose lines. These distribution points transfer fuel to organic refueling vehicles belonging to division and corps units in division sectors to include FA elements.

5-24. Whenever planning to draw supplies from division resources, nondivisional FA unit S4s must coordinate closely with division G4s and division MMCs through main support battalion (MSB) or FSB support operations officers. MSBs/FSBs of heavy divisions also may establish retail fuel outlets along main supply routes (MSRs) to serve individual vehicles in the rear area.

5-25. Normally, FA battalions within a maneuver brigade's support area draw bulk fuel at the FSB Class III point. Under extreme conditions and after coordination, bulk fuel may be delivered to a FA battalion position. Distribution within the battalion is described in FM 6-20-1.

FIXING THE SYSTEM

General

5-26. Fixing FA systems directly affects the FA's capability to accomplish its mission. It ensures maximum availability of scarce equipment and involves maintaining, recovering, repairing, and replacing equipment. Success requires the integration of several CSS functional areas with support provided as far forward as possible. It transcends repair and includes providing repair parts at the right place and time and actions taken before, during, and after battle to keep equipment operational (see Figure 5-3).

5-27. If the repair system fails to function properly, FA units can attack the problem in two ways. They can notify force artillery G4s/S4s or the supported maneuver force. In most cases, the maneuver commander directly controls maintenance elements in his AO and is the person best able to resolve quickly critical problems affecting his operations.

5-28. Similar to POL and ammunition operations, FA G4s/S4s, battalion maintenance officers (BMOs), HQ or service battery commanders, or XOs should address maintenance or repair parts problems in face-to-face meetings with COSCOM/DISCOM G4s or support operations officers, MSB/FSB support operations officers, maintenance support team (MST) chiefs, or force G4s/S4s. Prior planning by FA G4s/S4s and their staffs plays a significant role in this process and should include establishing maintenance priorities and authorized stockage lists (ASLs).

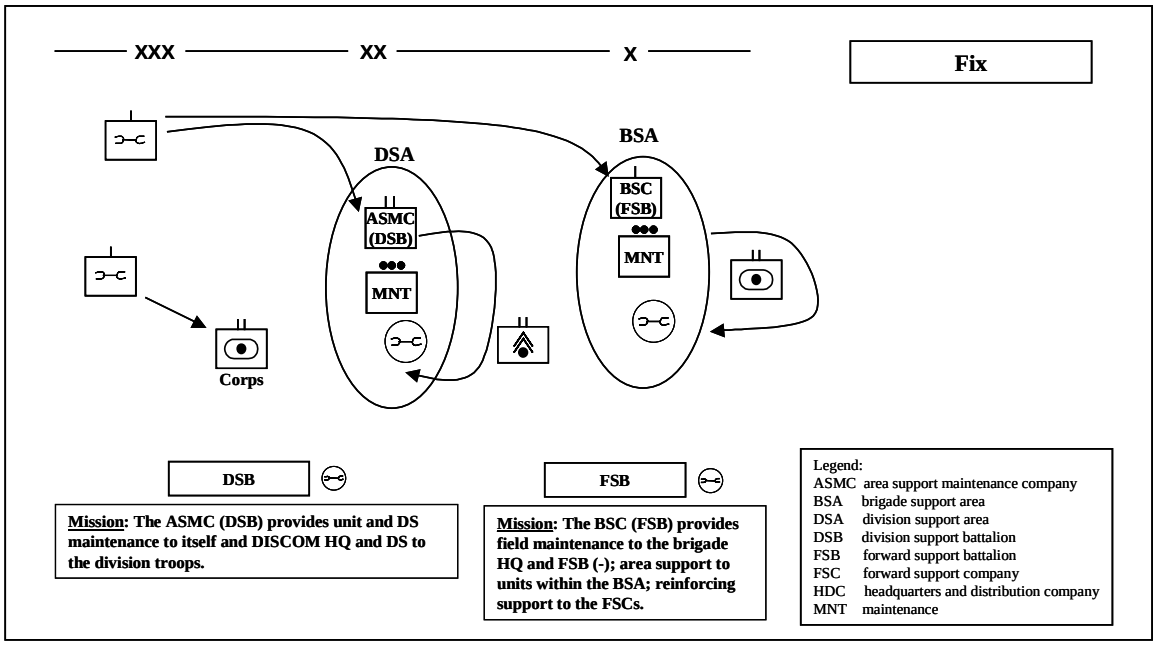

Figure 5-3. Fixing the Force

Maintenance Operations

5-29. Maintenance is a combat multiplier. The ability to repair equipment quickly and as close as possible to the point of failure or damage is key. The Army's maintenance system should be responsive and provide for improved operational readiness, battlefield mobility, and flexibility. Logistic personnel must assist commanders in developing and implementing aggressive and thorough preventive maintenance (PM) programs. For example, PM performed by operators or crewmembers to strictly enforced standards is key to keeping weapon systems operational and maximizing combat power. To meet the demands of the modern battlefield, maintenance is performed at four levels:

5-30. **Unit Maintenance**. At unit level, quick turnaround repairs through parts replacements, minor repairs, and scheduled services characterize maintenance. Operators and/or FA crews, the organization's maintenance section, or battalion maintenance assistance teams perform it. If repairs are beyond FA battalion capabilities, units request assistance from their supporting maintenance battalion.

5-31. **Direct Support Maintenance.** DS maintenance should be performed as far forward as possible, focused on mobile support for users in division areas. Nondivisional forward maintenance units can provide dedicated support to FA brigades and battalions, including repair management. They can also support divisional maintenance units when required as part of their area support mission.

5-32. DS maintenance tasks normally performed are battlefield damage assessment and repair (BDAR), repair of high-usage components in support of

the repairable management system, and operation of maintenance collection points and the Class IX DS supply activity.

5-33. **General Support Maintenance.** GS maintenance is performed in support of the theater supply system through the repair of assemblies, components and modules, repairables, and printed circuit boards. GS maintenance units are job or production line oriented for repair of Class VII (major end items) and Class IX (repair parts) items.

5-34. **Depot Maintenance.** US Army Materiel Command depots or activities, contractors, and host nation support personnel perform this level of maintenance in support of the supply system. Depot maintenance is performed in fixed facilities in continental United States (CONUS) or the theater of operations and is production line oriented.

5-35. **Repairs.** Repairs entail providing and installing repair parts and providing services to keep the FA system in a ready condition. If equipment cannot be repaired on site, it is returned to the rear only as far as needed. When an artillery weapon is disabled, organic FA battalion maintenance personnel try to repair it on the spot or evacuate it to a location where the extent of required repairs can be determined. Battalion maintenance teams and if needed, maintenance support teams with necessary repair parts or assemblies from the DS maintenance unit may be called forward. The goal should be to repair weapons in position whenever possible, instead of evacuating them.

5-36. **Replacement.** Replacement is the provision of new or substitute components. If equipment cannot be repaired quickly in a forward area, it is moved to a collection point established by the supporting maintenance commander. There it is either repaired or evacuated to a COSCOM maintenance unit. If equipment is evacuated to a COSCOM maintenance unit, a replacement must be requisitioned immediately.

5-37. If all maintenance or replacement requirements cannot be met, FA G4s/S4s must coordinate with operations counterparts to determine maintenance or replacement priorities based on operational requirements. FA units operating in maneuver brigade or division areas should be integrated into force maintenance priorities to include availability of contact teams for specific major end items not on force TOEs.

5-38. **Battlefield Damage Assessment and Repair.** BDAR is a technique for returning battle-damaged equipment (major end items) to an operational status as quickly as possible. It involves determining what needs to be fixed and if necessary, bypassing standard repair procedures by “jury-rigging” components. Operators should be familiar with procedures and guidelines for battlefield repairs in BDAR technical manuals for their specific equipment. BDAR procedures are used only in combat at the direction of unit commanders. Equipment repaired by BDAR methods should be repaired using standard maintenance procedures as soon as practicable after mission completion.

5-39. **Repair Parts.** Stockage of repair parts and major assemblies is based on corps or division ASLs. Stockage levels are based on best data available and

experience factors. They are limited to items needed to repair inoperable equipment quickly. FA brigade and div arty S4s should periodically review stockage lists for subordinate FA battalions and supporting maintenance companies to determine whether they support known unit contingency missions.

5-40. ASL parts for FA brigade battalions with unique, nondivisional weapon systems must be intensely managed. FA brigade CSS staffs must work closely with supporting corps support battalion (CSBs) to ensure availability of Class IX support while corps arty and div arty CSS staffs monitor, coordinate, and expedite the process.

5-41. **Other Equipment.** The preceding paragraphs described repair and recovery operations focused on FA weapon systems. Units are also responsible for recovering other unserviceable items such as signal and engineer equipment, tentage, and clothing to DS DISCOM and COSCOM maintenance units. Maintenance collection points are established for the collection of such unserviceable or abandoned material.

5-42. Automatic data processing equipment such as advanced communications, fire direction, and other specified equipment present special maintenance and repair responsibilities for units engaged heavily in continuous operations. Proper care and maintenance of this equipment are critical because of the inherent sensitivity of system components. Also, when components such as printed circuit boards and special cables are replaced at user or organizational levels, emphasis must be placed on adherence to recovery and evacuation procedures. Damaged items must be evacuated through proper channels to ensure availability of replacement components.

MOVING THE SYSTEM

General

5-43. Movement is inherent in all combat, CS, and CSS functions and a major concern for operations officers responsible for the synchronization of FA unit displacements within the overall force structure. It is the element that ties together sustainment operations and battlefield combat operations. Success requires extensive coordination and control to include effective and efficient management of transportation resources such as road, water, and rail networks. Total asset and in-transit visibility is critical.

5-44. Generally, FA CSS staffs have little control over external transportation assets because these do not exclusively support FA operations. However, when transportation support to distribution points (normally BSAs for FA units) negatively affects FA missions, then CSS staffs must aggressively pursue their concerns with FSB operations officers, force G4s, division transportation officers (DTOs), DISCOM operations officers, and the chain of command.

FA Transportation Assets

5-45. Organic FA vehicles are the primary transportation assets for planning and executing FA tactical and CSS movements. However, in special situations or under surge conditions, FA G4s/S4s may receive transportation augmentation from DISCOM MSB transportation motor transport companies

(supply and transport battalion in light divisions) or one of the CSG's transportation truck companies. Division or corps aviation brigades may also provide airlift transportation. The main point of contact in the division for additional ground transportation requirements is the DTO, who assigns available support on the basis of the command's overall mission priorities. Airlift support requirements are submitted through operational channels.

Coordination Requirements

5-46. In maneuver brigade sectors, FA battalion S3s through maneuver brigade S3s coordinates tactical unit movements. In division and corps rear areas, FA unit movements are coordinated by FA G4s/S4s and controlled by DISCOM or COSCOM movement control officers.

SUSTAINING THE FORCE

General

5-47. Planners must be prepared for mass casualties, mass destruction of equipment, and the destruction or loss of effectiveness of entire units. This paragraph addresses individual and crew replacements. Also, when battalions have been catastrophically depleted or rendered ineffective, they are returned to combat effectiveness through reconstitution.

5-48. The ability of div arty, corps arty, and FA brigade personnel officers to influence the manning system is small because of the "pipeline" nature of the replacement system. However, FA personnel officers must identify the impact of personnel shortages on mission accomplishment. Through aggressive coordination with counterparts at division and corps and the chain of command, FA CSS personnel can change replacement priorities and affect the manning system.

Individual And Crew Replacements

5-49. Pre-combat casualty estimates should be based on experience and good military judgment. To determine requirements to replace actual personnel losses in combat, accurate and timely personnel strength accounting and casualty reporting systems are needed. Whether to replace personnel either individually or as complete crews may depend on the following:

- Personnel and weapons losses are low: Individual replacements are preferred. For divisional units, DISCOMs transport personnel to BSAs. From there they are send forward to individual units as part of the logistic package (LOGPAC). For nondivisional units such as FA brigade personnel, CSG commanders establish linkup points in DSAs. Units pick up personnel and equipment as part of routine supply runs.
- Personnel losses are low and weapons losses high: Individual replacements may join FA crews at support area sites where replacement weapons are drawn. Whenever possible, experienced soldiers whose delivery systems have been destroyed or evacuated should be mixed with replacement soldiers to form complete crews (see FM 100-10 for further details). Conditions permitting, some FA crew familiarization training may be provided during linkup. Such wartime training is not elaborate or a

substitute for crew qualification. The intent is to familiarize crews with operating conditions in the combat zone to include:

- Refresher gunnery.
- Tactical driving.
- Enemy and allied vehicle identification.
- Passive air defense procedures.
- Local SOP.
- Any other subjects appropriate to the operational area.

- Personnel losses are high and weapon losses are low: DISCOMs or CSGs should transport replacement crews directly to battalion combat trains.
- Personnel and weapon losses are high: replacement crews may join replacement systems in support areas and then be sent to requesting units as discussed above.

Personnel Shortages

5-50. When the personnel system does not provide sufficient replacements, commanders must set assignment priorities on the basis of recommendations from personnel and operations officers. Also, they can reconstitute crews using div arty or FA brigade internal personnel assets by taking the following actions:

- Reassign soldiers in noncombat positions who have appropriate secondary military occupation specialties (MOSs).
- Reassign soldiers with related skills such as drivers.
- Return slightly wounded soldiers to duty as quickly as possible.
- Reassign soldiers among sections, batteries, and battalions to balance shortages across the command.

SUPPLY, MEDICAL OPERATIONS, AND FIELD SERVICES

General

5-51. Although the main focus of the CSS system is to arm, fuel, fix, sustain, and move the force, other vital services are provided. These include supply and medical operations and field services.

Supply Operations

5-52. **General.** Supply operations include the determination of requirements and requesting, processing, storing, and distributing supplies. MMCs maintain stock and order status for supplies within corps and divisions.

5-53. **Classes of Supplies.** The Army divides supplies into general classes for planning and administrative purposes (Table 5-1). Normally, requirements are expressed as days of supply by class of supply. Also, supply distribution points are designated on maps by class and subclass of supply.

Table 5-1. Classes of Supplies

CLASS I	Rations
CLASS II	Clothing, individual equipment, tentage, tool sets, tool kits, hand tool sets, and admin and housekeeping supplies and equipment
CLASS III	Petroleum, oils, and lubricants
CLASS IV	Construction and barrier material
CLASS V	Ammunition
CLASS VI	Personal demand items sold through post exchanges
CLASS VII	Major end items such as tanks, armored personnel carriers, and howitzers
CLASS VIII	Medical supplies
CLASS IX	Repair parts
CLASS X	Nonstandard items to support nonmilitary programs such as agriculture and economic development

5-54. Guidelines relevant for FA units for each class of supply are discussed below. When trying to resolve supply problems, FA battalion CSS personnel should notify force artillery counterparts for assistance and face-to-face discussions with FSB S4s (or support operations officer in light units) and MMCs. The force artillery CSS staff should also coordinate with MMCs and force G4s/S4s to resolve problems.

- Class I Supplies. FA batteries should carry a supply of combat rations (meals, ready-to-eat) for assigned personnel on section vehicles for use during the initial stages of an operation. METT-TC, unit load plans, and unit SOP determine specific amounts. After kitchen equipment and personnel have deployed, hot meals are prepared when the situation permits. CSB supply companies (DS) provide rations at Class I supply points on an area basis according to G1 or adjutant general strength figures. Water is distributed through water points that are normally established near Class I supply points. Gratuitous ration supplements consisting of health and sanitation items may also be available during the early phases of a conflict.
- Class II, Class III (packaged), and VI Supplies. Units submit requests to their COSCOM DS supply company. Requests for items not stocked are forwarded to the appropriate MMC. Supplies are shipped to the DS supply element initiating the request.
- Class III (bulk), V, VII, and IX Supplies. As previously described above.
- Class IV and X Supplies. These are handled generally the same way as Class II and VI supplies, although their issue may require command approval.
- Class VIII Supplies. Medical supply procedures are described below.

5-55. **Distribution.** Supplies are delivered to forward units whenever possible through unit distribution. The other method is supply point distribution when users pick up supplies from distribution points located in their support area. Normally, divisional and nondivisional support units receive supplies from FSBs or CSBs through supply point distribution (see Figure 5-4). Divisions use

a combination of supply point and unit distribution to supply subordinate units. FA brigades, when not supporting a division or ACR, receive support directly from the COSCOM. Critical items in short supply may also be delivered directly to the user by corps or theater support units. This method is most often used for major assemblies, ammunition, and fuel. Safety levels should be established for critical supply items to reorder and restock before availability reaches a critical status.

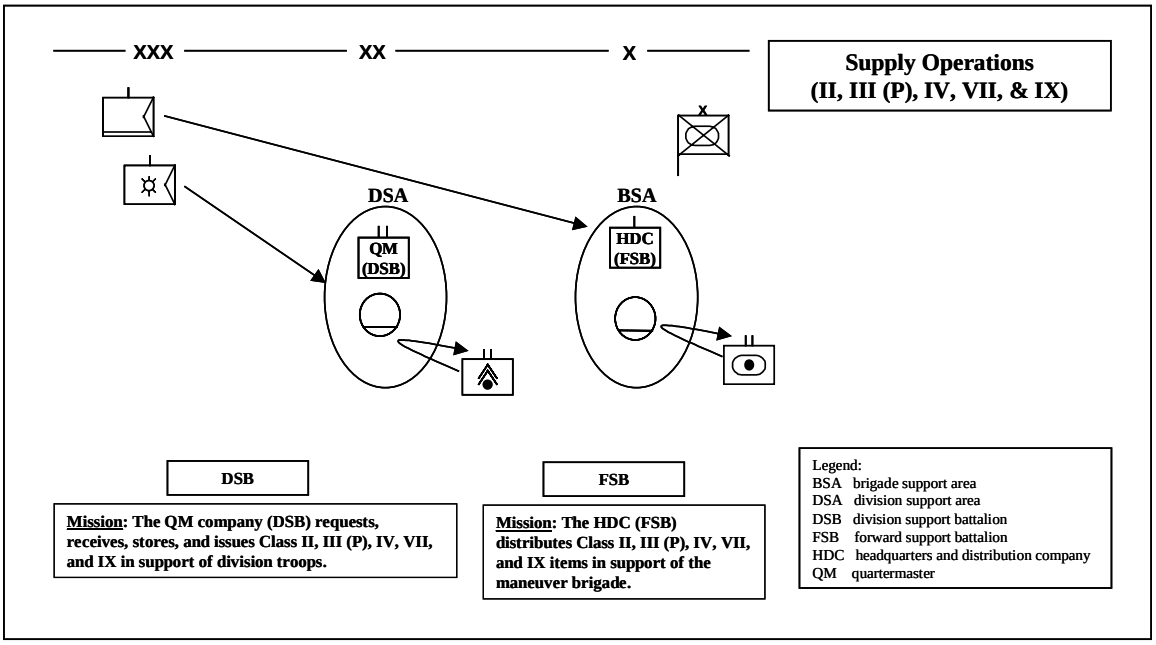

Figure 5-4. Sustaining the Force

Medical Operations

5-56. **General.** The goal of the medical system is to return soldiers to duty as soon as possible. Once patients have entered the medical evacuation system, their treatment is established by triage. Evacuation is governed by theater evacuation policies, giving FA CSS personnel few options to resolve short-term personnel shortages. Their efforts should be focused on FA internal procedures to enter soldiers into the medical support system expeditiously, when required. The corps medical brigade and DISCOM-organic medical units provide a series of services to include hospitalization, medical evacuation, patient regulation, medical supply, medical maintenance, preventive medicine, and others that are briefly addressed below. As noted in Appendix E, corps artys greatly depend on the support from their parent organization. For additional details see FM 8-10, *Health Services Support in a Theater of Operations*.

5-57. **Hospitalization.** Medical clearing companies (Level II care), mobile army surgical hospitals (MASHs), combat support hospitals (CSHs) (Level III care), or evacuation hospitals (Level IV care) provide hospitalization in corps areas. Normally, there are two evacuation hospitals, one CSH, and one MASH per division assigned to each corps. Clearing companies are assigned for division-level medical care to units located in the corps area, for example, an artillery

brigade. Normally, CSHs and MASHs are located in the corps forward area and give emergency resuscitative, medical, psychological, dental, preventive medicine, and ground evacuation support. Evacuation hospitals are larger than CSHs and MASHs, are located farther to the rear, and provide complete medical care and hospitalization.

5-58. In DSAs, hospitalization and medical services are provided by medical companies of the main support battalion and by unit organic medical elements. A medical company located in the BSA supports each maneuver brigade. These companies provide emergency resuscitation, medical, psychological, dental, preventive medicine, and ground evacuation support. Since these units must move with their supported units, their capability to hold patients is limited to patients who will return to duty in a few hours or days. FA brigades operating in division rear areas draw support from medical units in the DSAs.

5-59. **Evacuation Guidelines.** Patients are held or evacuated from medical units based on patient condition and corps evacuation policies. They are evacuated only as far to the rear as needed to provide care consistent with the tactical situation. Doctrine for medical evacuation in corps sectors also prescribes that once patients have entered the medical system, higher echelons evacuate from lower. The exception is in division rear combat areas where units with organic evacuation assets may be required to evacuate patients to their supporting medical unit. Two air ambulance detachments and one ground ambulance company provide for patient evacuation from each division. Movement by air ambulance is the preferred method of evacuation.

5-60. In the corps rear, medical brigade air ambulance companies provide aeromedical evacuation on an area basis. Ground ambulance detachments also provide area support to units located in corps rear areas.

5-61. **Medical Supplies.** Medical supplies (Class VIII), medical maintenance, and optical fabrication are provided to the corps by the medical supply, optical, and maintenance (MEDSOM) battalion of the medical brigade. Unit aid stations located in the corps rear area may draw medical supplies from their supporting medical unit. In division areas, division medical companies provide these same services. Below division level, medical resupply is informal and medical supplies are transported by ambulance. FA brigades, when not supporting a division, receive support directly from the corps medical brigade.

Field Services

5-62. Field services are services required by units that are not usually available within the unit. CSG supply and services battalions provide both DS and GS field service support. These battalions have a DS supply and service (S&S) company and a GS field service company. The DS company supports nondivisional units in the corps area, and the GS company supports division areas. Laundry and bath detachments may be positioned in division AOs or they can be centrally located in the corps area. To counter the NBC treat, bath units may also be used for decontamination.

5-63. Field services include the following:

- Laundry.

- Bath.
- Clothing exchange.
- Bakery.
- Textile and clothing renovation.
- Salvage.
- Decontamination.
- Graves registration (GRREG).
- Post exchange sales.
- General duty labor.

In peacetime, there is no capability to provide selected field service functions. GRREG, bakery, post exchange sales, and general duty labor are examples of functions that may not be immediately available upon initial deployment.

RECONSTITUTION

General

5-64. When a unit is at an unacceptable level of combat readiness, it may be reconstituted. Reconstitution consists of extraordinary actions to restore units to a desired level of combat effectiveness commensurate with mission requirements and resource availability. It differs from sustaining operations, which are routine actions to maintain combat readiness. Although reconstitution is a command responsibility and primarily an operations function, CSS elements are deeply involved in replacing personnel, equipment, and supplies. It is a total process whose major elements are reorganization, assessment, and regeneration. For additional details see FM 100-10 and FM 100-9, *Reconstitution*.

REORGANIZATION

5-65. Reorganization is a shift of resources within a degraded unit to restore its combat effectiveness. It may include cross-leveling equipment and personnel, matching operational weapon systems with crews, forming composite units, and providing thorough equipment decontamination support. The two types of reorganization are:

- Immediate battlefield reorganization. This is the quick and often temporary restoration of units. It is conducted during an operation.
- Deliberate reorganization. This is a permanent restructuring of the unit. Deliberate reorganization is supported with higher echelon resources such as maintenance, transportation, and personnel replacements. The parent unit commander one echelon higher than the unit being reorganized must approve deliberate reorganization.

Assessment

5-66. Assessment measures a unit's capability to perform its mission. Once it is determined that a unit is no longer mission-capable even after reorganization, the unit's mission must be changed or the unit must be removed from combat. A more thorough evaluation is then conducted to determine regeneration needs.

REGENERATION

5-67. Regeneration, or rebuilding a unit, is a corps commander's prerogative. It requires large-scale replacement of personnel, equipment, and supplies; reestablishing or replacing essential command, control, and communications; and conducting training for the rebuilt unit. Because of the intensive nature of regeneration, it occurs at a regeneration site after the unit disengages. It requires extensive coordination among operations and CSS elements and balancing regeneration requirements for supplies, equipment, and personnel against other command demands.

COMBAT SERVICE SUPPORT INFRASTRUCTURE

CORPS ARTY COMBAT SERVICE SUPPORT

5-68. Corps arty HHBs and FA brigades have no organic CSS structure above battalion level other than CSS coordinating staffs in corps arty and FA brigade HQ.

5-69. Forward CSGs consisting of multifunctional CSBs normally provide area support to customers located in or transiting their areas of responsibility. Corps arty HHBs and separate FA battalions not attached to an FA brigade draw support from CSB(s) responsible for their particular area. For a detailed discussion of the structure and employment of CSGs, see FM 54-30, *Corps Support Groups*.

5-70. To facilitate support for corps units operating in division support areas, CSG commanders normally tailor a forward CSB per division and position them in division rear areas to support nondivisional corps units or functions (for example, maintenance, POL, or personnel administration).

FA BRIGADE COMBAT SERVICE SUPPORT

5-71. Corps FA brigades draw support on an area basis from supporting CSG units. To ensure access to the necessary support, FA brigade CSS staffs must be prepared to coordinate directly with forward CSGs, CSBs, forward logistic elements (FLEs) from supporting CSGs, MSBs, FSBs, or COSCOM and DISCOM staffs.

5-72. When gaining CSS structures are incompatible with or inadequate to support newly arriving corps arty battalions or corps support teams, losing CSGs and/or CSBs can provide the necessary additional support directly to corps FA brigades/battalions. For example, MSTs and FLEs will be task organized by CSB DS companies and deploy with designated corps arty battalions. Although accompanying MST/FLEs may not be organized to meet every maintenance and Class IX supply need of nondivisional units, they can unburden supported corps arty units from the complex task of establishing and coordinating support in each new operational area. A strong and effective support relationship can also be fostered when MSTs are collocated with FA brigades/battalions on the same installation in peacetime to establish a habitual relationship. It will help ensure that assigned maintenance personnel have the right skills and tools and that authorized stockage lists are artillery-oriented.

5-73. Although CSBs have ultimate responsibility for supporting corps units, divisional FSBs and MSBs may also provide support on an area basis to

nondivisional units operating within sector. For example, a reinforcing FA brigade may receive maintenance and ammunition support directly from its forward CSB while drawing Class I (food and water) and Class III (POL) from DISCOM elements. This is significant because cannon and rocket artillery units, regardless of assigned tactical mission, normally operate in division or brigade sectors as a function of weapons ranges. However, divisional support is normally constrained by the number of personnel, items, and types of equipment to be supported particularly because corps arty FA brigades often field battalions with weapon systems not organic to the divisions they support. With FSB/MSBs designed to support only organic and attached elements, divisional support cannot be assumed unless prior arrangements are made and confirmed.

5-74. When additional support requirements or dispersion create significant or unusual new work loads for FSB/MSBs, forward CSBs may augment divisional capabilities with specialized personnel, critical spares, or dedicated support teams. Regardless of whether corps units are supported by CSBs or in a combined FSB/MSB/CSB effort, the source of the actual support should be transparent to the customer as much as possible.

DIV ARTY COMBAT SERVICE SUPPORT

5-75. Although similar in size and structure and operating under an area support concept, div artys and FA brigades operate under very different CSS arrangements. Divisional units receive dedicated support from divisional CSS elements within their AO.

5-76. DISCOM commanders direct support activities within sector according to command priorities and changing battlefield requirements. DISCOMs are normally organized with three FSBs to coordinate CSS for maneuver brigades in designated BSAs. This includes support for habitually associated DS artillery battalions and other divisional slice elements.

5-77. DS FA battalion supply operations centers (BSOCs) (or ALOCs in light divisions) are normally located in BSAs. They forecast logistic requirements to their respective FSB to include requirements for reinforcing artillery units. In turn division CSS staffs and DISCOMs integrate div arty support requirements into overall division requirements as a normal part of doing business. While FSBs execute logistic resupply operations, div arty CSS staffs should monitor all logistic activities for subordinate elements and forecast and coordinate CSS requirements for artillery units in GS of the division.

5-78. FSBs are backed up by an MSB in the division rear area. In addition to backup support, MSBs also provide direct support for div arty HHBs, MLRS battalions in heavy divisions, and other organic units in sector.

5-79. When divisions cannot meet CSS requirements internally or are called upon to provide specialized, non-organic technical assistance to supporting, non-organic elements, CSGs normally provide additional assistance through CSBs as noted above.

COMBAT SERVICE SUPPORT OF OFFENSIVE OPERATIONS

5-80. As FA units move forward and offensive combat operations are initiated, LOCs extend and detailed planning is required to accommodate increased rates of consumption. FA operations must be sustainable with fuel, ammunition, maintenance, and medical support over aerial and/or ground LOCs, particularly Classes III and V, and VIII. Logistic planners must arrange for fuel to be pushed forward to allow artillery units to refuel with minimum disruption of FA operations. Planning should consider access to prepositioned forward corps and division CSS assets to include refuel-on-the-move options and equipment recovery support. En route or "hot" refueling is the preferred option for Class III operations in the offense. During movement to contact, units should anticipate a disruption of resupply. They should carry sufficient supplies to support them through the movement to contact and ensuing battle.

5-81. Prior to crossing the LD in support of offensive operations, firing units should use prepositioned ammunition stocks to fire preparations or other programs requiring extensive expenditure of ammunition. This will conserve up-loaded ammunition and permit advance into enemy territory with a maximum amount of accompanying ammunition stocks.

5-82. CSS operations during deliberate attacks should focus on weighting the main effort and the resupply of critical items such as fuel and ammunition and the provision of medical and maintenance support. Follow-on operations must be considered to ensure a swift transition into exploitation and/or pursuit operations.

COMBAT SERVICE SUPPORT OF DEFENSIVE OPERATIONS

5-83. Sustained combat in the MBA will normally generate the largest requirement for supplies and services, stress resupply capabilities for fuel and ammunition, and require rapid evacuation of wounded and equipment repair as far forward as possible. CSS for artillery units in a defend role requires prepositioning of ammunition and other essential supplies. During a delay mission, supplies should be prepositioned at subsequent delay lines or positions. POL and ammunition stocks must also be adequate to support decisive MBA actions. For further details on planning considerations, see Chapter 6.

COMBAT SERVICE SUPPORT OF STABILITY OPERATIONS

5-84. Commander's CSS requirements in stability operations vary greatly depending upon the mission and changing circumstances. Commanders conduct stability operations within a complex, dynamic, and often asymmetrical environment. For example, force commanders may be required to establish a presence, separate combatants, restore order, or perform other operations that provide stability. Frequently, commanders must simultaneously conduct infrastructure repair sufficient enough to maneuver and sustain the force while stabilizing the situation. CSS commanders and staff devise a concept of logistic support that enables the commander the flexibility to react to changing situations.

5-85. Some operations, such as peace enforcement, may involve levels of support comparable to offensive and defensive operations. In other operations, demands

may be lower but distances may increase. In stability operations, contracted support is often more appropriate than other operations. Contracting may benefit such CSS activities as food service, morale, welfare, and recreation, billeting, transportation, shower, laundry, and clothing repair. It is important to integrate support not only with other US services and multinational partners, but particularly with the nongovernmental organizations (NGOs) that are likely to be involved in stability operations. Class IV and explosive ordnance disposal support may also be critical in stability operations.

5-86. The principle concerning exchange of multinational support under US law is that support provided by US forces to other militaries is reimbursable. In the absence of appropriate international agreements, no authority exists for combatant commanders to provide for or accept logistic support from multinational partners. Legal authority to exchange support with multinational partners rests with host nation support agreements and other bilateral agreements, such as the acquisition and cross servicing agreement. Approval to exchange support with NGOs normally comes from the Department of State. Bilateral agreements are necessary to leverage local resources to support deployed forces. Commanders and staffs at all levels need to be familiar with the scope and authorities provided for in existing agreements. Staff estimates should reflect only those resources provided for by agreement. Negotiation and approval of these agreements may be restricted to the National Command Authority or may be limited by statute or other legislative restrictions. Where no international agreements exist, requirements that need negotiation and approval must be identified early. Including the operational law judge advocate will assist in resolving issues involving international agreements.

COMBAT SERVICE SUPPORT OF SUPPORT OPERATIONS

5-87. CSS forces may be the decisive Army force component in support operations. In support operations, commanders provide services that meet the immediate needs of designated groups for a limited time until civil authorities can assume responsibility. How commanders approach providing support to civil authorities affects CSS. For example, a commander may be faced with providing support due to a natural disaster such as a hurricane where thousands of homes were destroyed over hundreds of miles and basic essentials such as water, food, medical care, and electricity are unavailable. The commander may choose to prioritize which services to improve and where, thus affecting how CSS commanders and staff develop a concept of logistic support that meets mission requirements. In other support operations such as floods or drought, disease and starvation may be a greater and more immediate concern. The lack of usable road space may place a greater dependency upon air assets. CSS commanders and staff devise a concept of logistic support that meets those requirements.

5-88. Distribution of food, water, supplies, field services, and medical support are often the primary activities of support operations. Support operations involve relatively high levels of CSS-related support to civilian populations. Combat health support in support operations involves such activities as providing basic necessities of life for general populations and assisting in establishing or improving basic health and sanitation services. Planners work with multinational, joint, and interagency planners along with local authorities

to ensure support responsibilities, priorities, and standards, as well as ROE, are clearly laid out.

Chapter 6

Field Artillery Mission Planning, Preparation, and Execution

As the pace of technological innovations and battlefield operations continues to accelerate, a streamlined military decision-making process (MDMP) gains in importance. This applies particularly to FA operations where reaction times in support of close combat, counterfire, and missile defense operations are brief and crucial to overall mission success. As time constraints place increased importance on individual and collective expertise, supporting procedures and techniques must be focused on reducing decision cycles and increasing command post efficiencies and effectiveness. This chapter, therefore, provides an overview of how force artillery CPs participate in force mission planning, preparation, and execution to include essential interfaces with higher, adjacent, and subordinate headquarters. Section I specifically addresses critical interfaces between the force HQ and corps arty CPs during parallel planning leading to the publication of the FA support plan described in Section II. Section III deals with FA-focused planning considerations that also guide FA actions during mission preparation and execution highlighted in Sections IV and V.

SECTION I - FORCE HEADQUARTERS - FORCE ARTILLERY PLANNING INTERFACES

GENERAL

6-1. The MDMP is a continuous process. The process normally begins with the anticipation or receipt of a new mission and specific tasks assigned by a higher HQ OPLAN/OPORD. It is described in detail in FM 101-5.

6-2. The JFC establishes overall guidance for planning, prioritization of missions and targets, and the allocation of resources. Within this context, corps and division commanders and their FSCOORDs work closely during the planning phase. As noted in Chapter 1, FSCOORDs are responsible for advising the force commander on the best use of available FS resources to include FA assets and for developing and implementing the FS plan. The desired effects on the enemy are defined early by the force commander in his FS guidance through targeting objectives against enemy capabilities that could interfere with the achievement of friendly objectives. The resulting schemes of maneuver, fires, and support are developed simultaneously based on the commander's intent and attack guidance.

FORCE MAIN CP PLANNING STEPS AND OUTPUTS

GENERAL

6-3. Under FSCOORD supervision, FSCs/FSEs/DOCCs participate in the force HQ mission planning process. With each new operation, the FSCOORD and FSCs/FSEs/DOCCs must ensure that the force commander's intent and guidance for fires is quickly, accurately, and reliably transmitted to force artillery CPs. WARNOs and face-to-face meetings should be used to distribute information horizontally, making optimum use of local area communications networks to keep all concerned apprised of the latest information. This is essential to permit parallel FA mission planning.

6-4. An early, effective dialogue between members of FA CPs and force HQ FSC/FSE/DOCC, targeting team, and the ACE is also essential for a responsive return flow of updated FA information to support the force HQ planning process. This information should assist in updating the FA portion of the FS estimate and providing the ACE and targeting team the latest FA data, insights, and conclusions to support TVA, force HQ IPB refinements, and preparation of the intelligence collection plan. Information provided should include the enemy's FA OB and doctrinal template; proposed FA task organizations/missions; status of subordinate and supporting FA formations; limitations and constraints; FA TSS; and positioning, CSS, and security requirements.

RECEIPT OF MISSION

6-5. Upon receipt, the force commander and staff consider implications of the new mission on the current fight and friendly force posture. After an initial assessment, all force FS agencies and supporting FA units are alerted as soon as practicable to initiate their own parallel planning efforts (first WARNO). FSCs/FSEs/FAIOs should also ensure that all IPB products to include likely enemy COAs are released to subordinate HQ as soon as cleared by the force G2/S2 to enhance parallel planning and IPB preparation at the lower levels of command. This WARNO should provide subordinate FA elements the following as a minimum:

- Type of operation to be conducted (offense, defense, etc.).
- General outline of the AO.
- Any known/anticipated changes in the FA's organization for combat, FSCMs, ROE, communications, and CSS.
- Initial timelines.

FORCE HQ MISSION ANALYSIS AND PLANNING GUIDANCE

6-6. Mission analysis by the force HQ is critical for force artillery CPs. This analysis starts to circumscribe the direction of parallel force artillery planning activities. Mission analysis begins with a review of the commander's intent one and two levels higher and focuses on the rapid development of the force HQ IPB; identification of specified, implied, and essential tasks to include those for FA formations; an initial assessment of FS survivability and employment considerations; and a restatement of the mission. This is followed by the force commander's planning guidance. By providing the most recent information drawn from updated FA staff and FA commander's estimates as soon as

possible after the first WARNO, FA CPs can assist in updating the force HQ FS estimate, graphics, facts and assumptions, and FA OB and doctrinal template.

6-7. The force commander's planning guidance normally establishes options to be considered and essential tasks to be addressed. He may include enemy and friendly COAs to be pursued or rejected, associated priorities, and a time plan for mission planning, preparation, and execution. The accompanying commander's statement of intent provides the foundation for developing the eventual concept of operations. By outlining considerations for developing a scheme of maneuver, the commander also sets the stage for the allocation of forces and the design of supporting plans and annexes to include the FS and FA support plans.

6-8. After the mission analysis briefing reporting the results of the FS mission analysis, the force commander should issue specific planning guidance supporting the development of concepts of fires and the fires paragraph for each COA under consideration. A second WARNO should forward all relevant planning guidance to include the following for subordinate and supporting FA units to include:

- A clear statement of how the force artillery will contribute to mission accomplishment and meeting the commander's intent.
- Commander's attack guidance for engaging enemy formations, functions, and capabilities.
- Commander's FS guidance and expectations in support of deep, close, and rear battles; SEAD, counterfire, interdiction, etc.
- Desired effects.
- FS assets to be retained under force HQ control.
- Munition restrictions, priorities, and other CSS considerations.
- Tentative position requirements and changes in the allocation of FA attack and TA assets.

Note: All of the above elements have a direct bearing on FA operations and the development of the FA support plan.

6-9. At this time, results of the initial force IPB should also be passed to all subordinate and supporting units and staff elements. Included are:

- Modified combined obstacle overlay (MCOO).
- Avenues of approach overlay if not on the MCOO.
- Enemy situation templates (SITTEMPs).
- Initial intelligence collection plan.
- Reconnaissance requirements to fill intelligence gaps.

COA DEVELOPMENT

6-10. During the COA development phase, FSCs/FSEs/DOCCs develop tentative concepts of fire to support each maneuver COA based on the force commander's initial targeting objectives and attack guidance. In coordination with the targeting team, the FSE/FSC updates TSS to assist in the initial identification of targets and suspected targets, identifies EFSTs for main and supporting efforts, and contributes to the development of event templates. COA development will also consider FS limitations and capabilities and establish

FSCMs. The FSC/FSE should finally coordinate arrangements in support of each COA with force artillery TOCs to ensure COAs are supportable from an FA perspective.

6-11. Concepts of fires generated during COA development are normally stated in general terms, but should include:

- Generic FA task organization for FA/FS attack and target acquisition systems to assist in developing necessary friendly combat power ratios.
- Tentative HVT nominations based on the G2's/S2's TVA.
- Initial identification of HPTs and EFSTs, target lists, overlays, and draft attack guidance matrix.
- Tentative FA position areas, CSS, communications, movement, and force protection considerations.
- BDA requirements.

6-12. Note: EFSTs are those that, if not accomplished, will cause failure regardless of what other tasks are accomplished. They should be clearly associated with the commander's intent and attack guidance. Targeting standards established during this phase should provide measurable and relevant guidelines for judging accomplishment of EFSTs. The FSCOORD develops the "how" for these ESFTs and defines further details during the subsequent wargaming phase.

COA ANALYSIS/WARGAMING

6-13. Specifics on how to fight with fires effectively, to include validation and further definition of HPTs and ESFTs tentatively established during COA development will be confirmed during the wargaming process. Interaction between the targeting team, FSC/FSE/DOCC, and the force artillery will also generate the TSS, HPTL, and AGM in support of individual COAs. BDA requirements are reflected on the AGM and integrated into the force intelligence collection plan. Wargaming also includes the allocation of FA delivery and TA units two levels down and explores the feasibility of FA tactical missions and any associated risks and shortfalls.

6-14. In the wargaming process, the concept of fires evolves into the scheme of fires as a principal supporting element of the concept of operations for each COA. It establishes a focus for fires by establishing EFSTs that describe in sequential order and detail when and where in time and space on the battlefield enemy formations and/or functions will be engaged with indirect fires. These EFSTs can be graphically described in a "scheme of fire matrix" to assist in tracking critical FS events within the command's battlespace during COA execution (for further information see FM 6-20-30). Tactical decisions for each target will determine the time of attack, desired effects on enemy capabilities, degree of damage, and the attack system to be used. Tactical decisions will, in turn, lead to technical decisions specifying the number and type of munitions, units to conduct the attack, and the response time for the attacking unit.

6-15. During the wargame, the FSCOORD recommends the most effective use of available FS assets to include CSS requirements such as RSRs and CSRs. He integrates FS into the command's concept of operations and schemes of maneuver and support for each COA under consideration within constraints

imposed by higher HQ. The accompanying COA analysis determines whether FS assets achieved desired effects against critical enemy formations or functions and compares wargaming results based on recorded advantages and disadvantages. It provides an assessment of the adequacy of assigned FS/FA tasks, FA organization for combat, control measures, and movement, displacement, security, and synchronization requirements for subordinate FA formations.

COA COMPARISON

6-16. After wargaming and analysis, COAs are compared to select the one with the greatest probability of success against the enemy COA of greatest concern to the force commander.

COA APPROVAL

6-17. In briefing the commander, staff members draw on wargaming results and targeting team products (HPTL, AGM, TSS, and BDA requirements) to provide details and rationale supporting the proposed COA within their respective areas of expertise. The commander's approval is accompanied by the assignment of specific tasks to subordinate HQ, establishment of priorities for support, and the definition of command relationships and tactical missions.

6-18. The approved scheme of fires and fires paragraphs for the selected COA are expanded by the FSCs/FSEs/DOCCs into the FS plan. It includes further refinement of the HPTL and completion of the AGM as graphic portrayal of the commander's attack guidance. It should specify:

- Priority in which targets are to be attacked.
- How and when targets are to be attacked.
- Desired target effects.
- HPTs requiring BDA.
- Special instructions and restrictions.

6-19. The scheme of fires should be clear and understandable, including sufficient detail for guiding the execution of EFSTs. It should also be the basis for the development of the FA support plan, changing generic FA force arrays to specific organizations for combat and FA tactical mission assignments. Relevant information is disseminated in the form of a third WARNO to all subordinate and supporting FS elements immediately after final COA selection.

OPLAN/OPORD/FS PLAN PRODUCTION

6-20. After COA selection, the force artillery commander, as FSCOORD, develops the FS plan in corps/division main CPs. He is assisted by the DFSCOORD and FSCs/FSEs/DOCCs in close coordination with force G3s, G4s, and G2s. The FS plan reflects the integration of air interdiction, CAS, naval gunfire, EW, FA, and any other available FS assets to include cannon, rocket, and missile fires in support of close, deep, and rear operations. It provides detailed guidance, assigns execution responsibility to subordinates, allocates resources, and is the basis for refinements. Also included are tasks such as JSEAD and counterfire planning responsibilities and requirements for massing of fires by DS or reinforcing FA units. Since plans concern future operations,

they do not remain static. As estimates are adjusted or changed to reflect current events, plans will also require modification.

6-21. The FS plan establishes the following for subordinate FA formations:

- FA organization for combat.
- Types of targets to be attacked by specific units.
- Type of munitions to be used, desired effects, and time of attack.
- Allocation of ammunition for each phase of the operation based on available supplies and haul capability.
- FS execution matrix to portray graphically the concept of fires (lethal and nonlethal), if needed.
- Reference to the FA support plan (as appendix to the FS annex to expand on FA tasks).
- Positioning restrictions.
- Employment and allocation of FA TA systems with specific TA tasks provided in the accompanying FA support plan.
- Special instructions addressing FA communications requirements.
- Targeting products (TSS, HPTL, AGM, and BDA requirements).
- Instructions to coordinate fires:
  - Clear definition of the deep operations area, if not already defined in the basic plan.
  - FSCMs integration with maneuver control measures.
  - Reference to time of execution of program of fires relative to H-Hour (counterfire, preparations or counterpreparations, JSEAD, etc.).
  - ROE.

6-22. The FS plan is published as an annex to the force PLAN/OPORD. FSCs/FSEs pass this annex and other relevant information to subordinate artillery TOCs. Detailed procedures for preparing the FS plan are found in FMs 6-20-30 and 6-20-40.

SECTION II - THE FIELD ARTILLERY MISSION PLANNING PROCESS

GENERAL

6-23. As noted in Section I, an unobstructed and comprehensive two-way flow of information among FA and force CPs is crucial for the effective integration and employment of available FA assets during the MDMP. Such continuous, effective exchange of information must also be extended to adjacent HQ, subordinate FA elements, and supporting intelligence agencies.

6-24. The force artillery commander provides overall supervision over the FA planning process while simultaneously executing his responsibilities as FSCOORD on the force CP staff. Through personal guidance and command presence at critical times and locations, he ensures the effective horizontal and vertical integration and synchronization of FA activities into the force planning process. At other times, he monitors the development of the FA support plan through the force artillery CofS/XO. A graphic portrayal of the information flow during the MDMP is depicted in Figure 6-1 at the end of this section.

6-25. FA CPs should be focused on deliberate, top-down planning, bottom-up refinement, and execution in consonance with the force commander's and FSCOORD's guidance for FA fires. While the force FSC/FSE/DOCC develops the FS annex in the force main CP, FA CP staff officers provide input to the higher HQ and simultaneously prepare the FA support plan in FA TOCs and ALOCs. Successful FA support plan development and coordination must begin as early as possible and call for a clear understanding of the force commander's intent and concepts of maneuver, fires, and support. These are normally supplemented by verbal and written instructions by the command's FSCOORD and FSC/FSE/DOCC.

FORCE ARTILLERY PLANNING STEPS AND OUTPUTS

GENERAL

6-26. Most of the force HQ planning steps addressed in Section I are mirrored within the force artillery CP accompanied by a shift in focus from FS to the narrower perspective of FA operations. Throughout the process, the FA commander, CofS/XO, and coordinating staff members must continuously update their estimates based on the evolving tactical situation and updated LPB/IPB. Similarly, the FA commander should validate his CCIR at each critical step and insist that the staff respond expeditiously to his information requirements.

6-27. The CofS/XO, who functions as the FA commander's principal assistant during mission planning, preparation, and execution, supervises the integration, coordination, and synchronization of planning activities by special and coordinating staff officers within the FA CP. He manages the information flow and time available; ensures that the staff has the required information, guidance, facilities, and equipment; and adheres to the TSOP. Throughout the planning process, information on the enemy is continuously assessed to confirm, deny, or further develop enemy intentions with focus on FA operations.

RECEIPT OF MISSION

6-28. Upon mission receipt, the FA commander and staff conduct an initial assessment of the new mission and its implications on current operations and the FA force posture. Simultaneously, they ensure that the commander's and staff's estimates are updated and shared to provide the FA staff with the required degree of situational awareness. Preparation of the initial FA-focused IPB in support of the new mission also helps identify characteristics of the battlefield within the force artillery's AO/area of interest. The emphasis is on friendly and enemy FA dispositions, capabilities, limitations, and constraints that will influence friendly and threat FA operations.

6-29. Based on the initial mission assessment, the FA commander supplements the preliminary information and guidance contained in the first force HQ WARNO to focus, expedite, and facilitate parallel planning efforts by the FA staff and to alert subordinate elements (first WARNO in FA channels). Included are:

- The FA commander's statement of his CCIR.
- Guidance on whether to proceed with the full or abbreviated decision-making process.

- Guidance for preparing the initial FA-focused IPB based on initial assumption and available enemy information.
- Tentative organization for combat for subordinate FA attack and TA assets in support of likely enemy and friendly force COAs.
- Any special guidance for employing FA TA assets, survey and met operations, and the planning of FA fires (e.g., SEAD, counterfires, preparations, and interdiction fires).

MISSION ANALYSIS

6-30. Upon receipt of the second force HQ WARNO, the FA CP assesses the force commander's planning guidance. When time is short, the FA commander and staff can conduct mission analysis as a brainstorming session, or the commander may conduct it strictly as a mental activity.

6-31. During mission analysis, the FA CP staff provides the FSC/FSE/targeting team input for the formulation of the force commander's attack guidance and updates TSS to establish or confirm requirements for the timely detection and attack of HPTs. At the same time, the FA CP should gain access and refine, as appropriate, IPB products from the force G2/S2/ACE with focus on FA operational requirements. Included are:

- The MCOO.
- Enemy mobility corridors if not on the MCOO.
- Imagery and other aerial photography.
- Climatic summary from the staff weather officer.

6-32. In close coordination with force HQ, the FA G2/S2 refines the initial FA-focused IPB and intelligence estimate (see Section III for details). Identifying remaining gaps in current intelligence holdings, the G2/S2 may also request assistance from higher, lower, and adjacent intelligence agencies to meet the force artillery's intelligence requirements. As part of the FA CP's TVA, the staff also identifies and nominates to the force HQ FSC/FSE and targeting team tentative FA-focused high-value targets (HVTs)/HPTs. Enemy FA OB and doctrinal, situation, and event templates developed during the FA IPB/estimate process are passed for integration into ACE IPB products. These products should be submitted in time to help brief the FA's role in support of likely threat COAs upon completion of the force HQ mission analysis.

6-33. FA IPB products are also used to focus force artillery collection efforts within the force artillery's area of influence to include:

- Positioning and cuing FA TA radars.
- Identifying named areas of interest (NAIs) to confirm or deny FA operations and dispositions in support of enemy COAs.
- Identifying characteristics of the environment that influence friendly and enemy FA operations.

6-34. During mission analysis, the FA CP staff also initiates the assessment of CSS requirements for subordinate and supporting units against available resources, building on insights from the updated LPB and CSS estimates. Included are:

- CSS consumption requirements by class of supply.

- Ground and air transportation requirements.
- Location of higher HQ and supporting HQ CSS nodes.
- Maintenance priorities for FA systems.
- Comparison of available resources and tentative requirements.
- Estimated casualty rates and ground and air transportation requirements to move casualties and replacements.

6-35. Although the CofS/XO/S3 may lead staff mission analysis efforts, the FA commander should personally specify the force artillery's essential tasks, approve his unit's restated mission, and issue his planning guidance to be passed in the second FA WARNO to subordinate and supporting elements. As part of the process, he also approves or adjusts his initial CCIR. The FA commander's planning guidance should include:

- The restated FA mission and confirmation of specified and implied FA tasks, and EFATs to include CSS requirements and CCIR.
- Preferred organization for combat for subordinate FA attack, CSS, and TA assets in support of force COA development.
- Priorities and guidelines for attacking enemy formations, functions, or capabilities with FA fires to include SEAD, counterfires, interdiction fires, preparations, etc.
- Any special instructions for employing FA survey and met assets.
- Time plan to support follow-on planning and mission preparations to include initial rehearsal guidance.
- FA assets preferably retained under force artillery control.

COA DEVELOPMENT

6-36. The FA commander and staff carefully consider enemy and friendly COAs developed by the force G3/S3 and G2/S2. In support of each friendly COA, they evaluate the most suitable employment of FA assets to include positioning, survivability, communications, and CSS requirements. This includes review of force HQ and force artillery TVA results, IPB updates, and identification of the most probable and most dangerous threat COA from an FA perspective. In the process, they help refine HVTs and HPTs for each COA and identify critical nodes, NAIs, and TAIs from an FA perspective. Recommendations to the force HQ may also include HPTs suitable for attack and/or acquisition by FA systems that warrant integration into the force HPTL. Ultimately, the FA course of action specifies the who, what, when, where, and why, of each EFAT.

6-37. CSS planners will consider the most suitable employment of FA and other supporting logistical assets in support of friendly COAs under consideration by the force HQ. Considering the dynamic nature of FA operations, they will recommend positioning, mission assignments, and priorities for the allocation of CSS resources to include RSRs. Included in their considerations are:

- Mission of each supported element, execution times, and current and planned locations.
- Anticipated changes in tactical missions, command relationships, and AOs.
- Identification of essential FA CSS assets requiring additional protection.
- Locations to match replacement crews with replacement weapons systems.

- Location of medical support facilities, evacuation routes, and evacuation procedures and policies.

6-38. Resulting insights and conclusions addressing the supportability of friendly COAs are offered to the force FSC/FSE for integration into the force COA development process. This may include a tentative allocation and prioritization of generic FA assets in support of each friendly COA's concept of fires. The FA CP should also make initial recommendations for the movement and positioning of FA attack, TA, and CSS assets, and the establishment of permissive and restrictive FSCMs and FA BDA requirements. The FA CP may also suggest options and priorities for the employment and integration of FA TA assets into the force collection plan.

COA WARGAMING/ANALYSIS AND COMPARISON

6-39. During this phase, FA staff members wargame and compare the suitability of remaining COAs from an FA perspective to include CSS considerations (ammunition, POL, prepositioning requirements, loss rates, etc.) and potential problems and deficiencies. Included are the refinement of the concept of fires for each COA into a scheme of fires with attention placed on FA contributions. Full use is made of FA-focused situation, event, and decision support templates, and other TVA/IPB products. In the process, the FA staff further refines these products; identifies and prioritizes additional FA information requirements; assesses the optimum use of FA munitions against enemy equipment, weapons, and formations; and verifies that the FA attack criteria conforms with the force commander's attack guidance for achieving desired effects.

6-40. At the end of this phase, the FA CP recommends to the force HQ the COA considered most suitable from an FA perspective. This is accompanied by supporting rationale, advantages, disadvantages, and options to overcome any residual deficiencies and risks. Further, they advise the FSC/FSE on:

- Position requirements for FA CPs, firing units, and TA radars.
- Displacement requirements and routes of march.
- Survivability requirements to enhance mission accomplishment.
- CSS requirements.

COA APPROVAL

6-41. Approval of the preferred COA by the force commander is accompanied by implementing guidance contained in the force HQ's third WARNO. To refine the selected COA from an FA perspective, the FA staff draws on products developed during COA development, wargaming, and analysis (e.g., AGM, HPTL, TSS, TA plans, schedules of fires, etc.). The FA commander also provides further guidance for changing the approved scheme of fires into the FA support plan. He dispatches the third WARNO in FA channels and:

- Confirms FA tactical mission assignments and task organization for subordinate FA elements, providing for contingencies through o/o missions and careful positioning of assets.
- Passes FA AGM, TSS, HPTL, and destruction criteria.
- Reaffirms CSS priorities to include RSR/CSRs, ATP/ASPs, CCL menus, and timely availability of CSS assets and services.

- Clearly identifies CSG/CSB and MSB/FSB relationships to FA units in their respective sectors and the distribution process for all classes of supplies.
- Confirms transportation requirements peculiar to the operation to include convoy clearance requirements, MSR restrictions, and traffic control procedures.
- Confirms primary and alternate communications nets, frequencies, and CP locations.
- Assesses the adequacy of FA survivability measures to include force protection assets (e.g., ADA, engineers, and maneuver elements).
- Confirms FA rehearsal requirements and radar search zones.

FA SUPPORT PLAN PREPARATION

6-42. The FA support plan is the force artillery commander's plan for employing the fires of all organic or attached FA assets in support of close, deep, and rear operations. Units assigned R, GSR, and o/o missions must also be included. The FA G3/S3 integrates input from the FA CP's coordinating and special staff and synchronizes activities horizontally with adjacent elements and vertically with higher, subordinate, supporting, and supported formations. When completed, the FA support plan will detail how the FA will shoot, move, communicate, acquire targets, and support itself in support of force operations. The FA support plan, as the final product of the planning effort, is reviewed by the FA commander before submission to force HQ for approval and inclusion into the force OPLAN/OPORD as part of the FS plan.

6-43. Reconnaissance and movement may be initiated at any time during the planning/preparation phases. The intent is to place FA elements into position for the timely and effective delivery of FA fires during mission execution. FA movements must be attuned to maneuver force displacements while retaining the capability to provide FA fires in support of close, deep, and rear operations. Reconnaissance should provide information necessary to develop feasible COAs and confirm the tentative plan. FA reconnaissance should be focused on position areas, routes, and enemy avenues of approach threatening FA positions.

6-44. As indicated in Appendix G, the FA support plan normally consists of a main body and a series of supporting tabs, e.g., TA, CSS, movement matrix, survey, met, and schedules of FA fires. Copies of the FA support plan are forwarded to subordinate FA units and to any outside agencies that may participate in the planned fires. This includes units with o/o missions. Since corps/division FS plans seldom reach all potential FA users, critical information in the force basic plan and FS annex is repeated in the FA support plan.

6-45. Development of a complete and detailed FA support plan is preferable to an incomplete one. However, this is frequently not possible in dynamic combat situations. Both written and verbal FRAGOs are used to pass essential information as it becomes available. Some information now is better than complete information received too late to act on. If non-corps arty/div arty assets are affected, FRAGO changes to the FA support plan are prepared by corps arty/div arty and released through the corps/division G3.

OPERATIONAL PHASE	STEPS IN FORCE MILITARY DECISION-MAKING PROCESS	ACTIONS AND OUTPUT	
		FORCE MAIN CP (FSC/FSE, DOCC, ACE, and Targeting Team)	FORCE ARTILLERY CP (Corps Arty, Div Arty, and FA Brigade)
Planning Phase (D3A Decide and Detect Function)	1. **<u>Receipt of Mission</u>**		
	❑ Issue WARNO to staff	• Staff collects tools for mission analysis ➢ Higher HQ OPLAN/OPORD, maps, SOP, FMs ➢ Current IPB, FS and other staff estimates[1]	• FA G2\S2s and G4/S4s keep IPB/LPB products updated with evolving situation
	❑ Initiate assessment (force commander and staff)	• Assess higher HQ: ➢ Commander's intent, mission, risks ➢ Available assets/AO/constraints ➢ Concept of operations/timelines	• FA commander and staff maintain estimates current throughout mission planning, preparation, and execution
	❑ Force commander issues guidance (basis for first WARNO[2])	• Initiate update of FS estimate and IPB	• FA staff passes updated info to force HQ
	❑ Issue first WARNO to subordinate units to initiate parallel planning. May include: ➢ Initial allocation of available time (2/3 rule) ➢ Decision on full/abbreviated MDMP ➢ Type of operation/AO outline ➢ Movements and reconnaissance to initiate ➢ Orders and rehearsal guidance ➢ Liaison requirements	• Determine force commander's initial targeting objectives and attack guidance • Supplement first WARNO with FS-specific guidance/info: ➢ Any known changes in FA organization, FSCMs, ROE, communications, and CSS ➢ Initial FS timelines ➢ Available IPB elements to include potential enemy COAs ➢ Liaison requirements ➢ Initial reconnaissance/movement/positioning requirements	• FA CPs initiate concurrent top-down planning, bottom-up refinement process: ➢ G3/S3 alerts command group/staff ➢ FA commander/staff assess WARNO impact on FA force posture/current/future flight ➢ Initiate mission-oriented update of CCIR, IPB/LPB, and estimates ➢ Provide info update to force HQ ➢ Dispatch first FA WARNO[2] to subordinates, to include preliminary employment considerations (attack/TA assets, met, survey, initial CCIR, etc.)
	2. **<u>17-Step Mission Analysis</u>**		
	➢ Analyze higher HQ order (intent, missions, constraints, AO characteristics)	• FSCOORD initiates FS mission analysis ➢ Review commander's intent (two levels up) with focus on FS operations ➢ Determine implications of new mission, AO, etc.; seek clarifications as necessary	• FA commander initiates FA mission analysis ➢ Review commander's intent (two levels up) with focus on FA operations ➢ Identify enemy facts/assumption/battlefield characteristics that impact on friendly/enemy FA operations

NOTES:
1-Estimates are updated in a continuous process by commander and staff during mission planning, preparation, and execution. They provide essential input to the MDMP.
2-WARNOs should cover items not in TSOP but necessary to prepare unit for next operation; should provide all relevant information in following areas: general situation - mission/type of operation - known time - critical events - RECON status - time/place for OPORD - special instructions (rehearsals, CSS, etc.) - any graphics.

LEGEND:
❑ Action(s) during one of seven MDMP steps
• Action(s)/output by force FS elements/FA CPs
➢ Supporting actions/output

Figure 6-1. Force - FA CP Interfaces During the Military Decision-Making Process

Planning Phase (continued)	2. **<u>17-Step Mission Analysis</u>**		
	❑ Analyze higher HQ order (cont.)		• Provide FSC/FSE initial insights, to include: ➢ Friendly/enemy FA dispositions capabilities/limitations/intentions ➢ AO/area of interest effects on FA operations ➢ Tentative FA organization/tactical missions in support of likely enemy/friendly COAs
	❑ Conduct initial IPB	• Update IPB, FS estimate, and intelligence collection plan, to include FA CP input • Identify impact of enemy facts/assumptions/AO on friendly/enemy FS operations • Update FS estimate based on IPB insights • Assist in developing FS portion of: ➢ Enemy OB/doctrinal template/SITTEMPs/event templates/likely threat COAs ➢ Initial intelligence collection plan ➢ Tentative HVTs, first draft of HPTs based on TVA • FAIO ensures release of IPB products ASAP	• Confirm earlier FA IPB input to force HQ -- enemy FA OB/doctrinal template, TSS[3], SITTEMP, NAI/TAIs, FA targets/target sets, etc. (submit in time for force HQ mission analysis briefing on likely enemy COAs) • Expand/refine force IPB products: MCOO, enemy mobility/avenues of approach overlay, SITTEMPs, intelligence collection plan, imagery/aerial photography, climatic summary, etc. • Pass FA IPB products[4] to subordinate elements/higher/ adjacent elements • Request assistance to fill intelligence gaps (higher/lower/adjacent elements)
	❑ Determine specified, implied, and essential tasks	• Identify specified/implied FS tasks; submit EFSTs for approval as basis for initial concept of fires	• Identify specified/implied FA tasks; submit EFATs for FA commander's approval
	❑ Review available assets	• Examine additions/deletions, changes in tactical missions and FS capabilities, status of delivery/TA means • Identify additional resource requirements	• Confirm availability of fire units/ammo; combat loss projections; estimated consumption rates/shortfalls; security, air/ground transportation, maintenance requirements; etc. • Expand on FA missions/command
	❑ Determine constraints	• Identify higher HQ FS constraints (resources, ROE, etc.) and limitations	• Identify FA constraints (ROE, resources, etc.)
	❑ Identify critical facts and assumptions	• Determine facts/suppositions related to enemy/friendly FS assets, strength, and readiness.	• Determine suppositions related to enemy/friendly FA assets; replace with facts

NOTES:
3-TSS assist in the initial identification of targets. Included are: attack system location accuracy requirements/expected target dwell time; size of enemy activity (point or area); status of activity (moving/stationary; and timeliness of information for attack.
4-FA-focused IPB products may include enemy air/ground avenues; obstacles/key terrain; percent of slope/trafficability; vegetation/hydrology; line of sight limitations; effects of weather/terrain on trafficability; effects of weather/terrain on enemy/friendly operations; direct enemy threat to FA formations/position areas.

LEGEND:
❑ Action(s) during one of seven MDMP steps
• Action(s)/output by force FS elements/FA CPs
➢ Supporting actions/output

Figure 6-1. Force - FA CP Interfaces During the Military Decision-Making Process Continued

	2. **17-Step Mission Analysis (cont)**		
	❑ Conduct risk assessment	• Consider FS survivability requirements essential for provision of adequate FS • Assess tactical/accidental risks with impact on FS operations/loss of FS combat power • Identify risk acceptability/control measures	• Assess tactical/accidental risks and impact on FA operations • Consider FA survivability requirements • Establish level of risk acceptability and control measures
	❑ Determine initial CCIR ❑ Determine initial reconnaissance annex	• Nominate FS IR to help establish CCIR and assist in FS resource allocation/employment • Nominate FS intelligence requirements to fill gaps based on review of initial IPB, CCIR, and FS estimate	• Continue FA IPB/TVA update: ➢ Focus intelligence collection efforts ➢ Nominate IR for formulation of FA CCIR ➢ Initiate FA reconnaissance ➢ Submit intelligence requests to higher HQ
Planning Phase (continued)	❑ Plan use of available time	• Refine time plan developed after mission receipt for critical FS events (briefings, rehearsals, etc.)	• Continue to refine initial timelines: ➢ Briefings, rehearsals, displacements ➢ Establish movement rates/times
	❑ Write restated mission	• Provide input for FSCOORD/force commander ➢ Employment/retention of FS assets ➢ Guidance/expectations for close, deep, rear operations; SEAD; counterfires; etc.	• Rewrite FA mission • Provide input to force HQ from FA perspective as appropriate
	❑ Conduct mission analysis briefing	• Present FS portion of mission analysis briefing: FS assets, EFSTs, constraints, etc.	• Present mission analysis briefing to FA CP staff/command group
	❑ Approve restated mission	• Assess commander's restated mission	• Assess force commander's restated mission and finalize FA commander's restated mission
	❑ Develop initial commander's intent	• Should include force commander's guidance for fires as basis for development of COA concepts of fires[5]	• Assess key FA tasks and consider optimum employment of FA assets
	❑ Issue commander's planning guidance	• Should include force commander's FS guidance (attack guidance[6]/targeting effects[7]/priorities/etc.) to help define concepts of fires for COAs	• Prepare tentative FA planning guidance • Attend force HQ briefing for first hand knowledge of enemy/friendly COAs and guidance

NOTES:
5-Should specify commander's expectations for close support, counterfire, deep fires, SEAD, FS assets retained to be under force HQ control, munitions restrictions, etc.
6-Force commander's attack guidance consists of time of attack, desired effects, units to conduct attack, and system to be used.
7-Targeting effects describe effects on enemy (e.g. disrupt, defeat, or destroy).

LEGEND:
❑ Action(s) during one of seven MDMP steps
• Action(s)/output by force FS elements/FA CPs
➢ Supporting actions/output

Figure 6-1. Force - FA CP Interfaces During the Military Decision-Making Process Continued

Planning Phase (continued)	❑ Issue second WARNO	• Supplement second WARNO with FS-specific instructions for subordinate FS elements: ➢ Clear statement of how FS will contribute to mission accomplishment ➢ Commander's attack guidance/targeting effects/expectations in support of close, deep, and rear battles ➢ FS assets retained under force HQ ➢ CSS restrictions and priorities ➢ Tentative position requirements/changes in task organizations	• Assess force HQ planning guidance (second WARNO) ➢ Determine FA contributions to mission accomplishment/meeting force commander's intent ➢ Adjust FA mission analysis/tentative planning guidance • Prepare second WARNO in FA channels • Issue FA commander's planning guidance
	❑ Review facts and assumptions	• Validate FS-relevant facts/assumptions/implications on FS mission throughout MDMP	• Continue to update estimates with new/significant FA-relevant info/facts/assumptions
	3. **<u>COA Development</u>**		
	❑ Analyze relative combat power	• Analyze relative FS combat power: ➢ Consider enemy strengths/weaknesses ➢ Propose generic FS organization for combat for each COA	• Building on FA operations estimate: ➢ Reconfirm status of FA assets/update info on enemy FA OB, doctrinal templates, etc. ➢ Propose FA generic organization for combat in support of friendly COAs ➢ Explore optimum use of FA assets as part of FS contribution to battle ➢ Compare relative FA strengths/weaknesses ➢ Focus FA IPB on FA-relevant intentions, enemy FA OB/positions, corridors, etc. ➢ Refine higher HQ products (event templates, SITTEMPs, decision support templates, etc.) ➢ Integrate FA TA assets into intelligence plan
	❑ Generate options	• Assist in determining decisive points/supporting efforts and EFSTs • Advise on integration of fires with maneuver and other BOS • Advise on elimination/modification of COAs	
	❑ Array initial forces	• Array generic FS assets in support of each friendly COA (Attack, TA, CSS, etc)	• Determine FA assets required to accomplish the FA mission • Identify any shortfalls

LEGEND:
❑ Action(s) during one of seven MDMP steps
• Action(s)/output by force FS elements/FA CPs
➢ Supporting actions/output

Figure 6-1. Force - FA CP Interfaces During the Military Decision-Making Process Continued

Planning Phase (continued)	3. **COA Development (cont)**		
	❑ Develop scheme of maneuver	• Effort will define close/rear/deep operations; plans for recon and security, main and supporting efforts; FS priorities; C2 arrangements, etc. • Refine HVT/HPT/EFSTs with G3/S3/G2/S2 using TVA • Develop concept of fires for each friendly COA, refining commander's FS guidance • Consider requirements for: ➢ FS position areas, triggers, security augmentations, CSS, BDA ➢ FSCMs, synchronization, communications • Conduct suitability/feasibility/etc. tests for concepts of fire for each COA	• Use TVA to assist in identification of HVTs and HPTs suitable for engagement with FA fires: ➢ Determine initial tasks and purposes for FA systems ➢ Determine HVT/HPTs from FA perspective
	❑ Assign headquarters	• Tailor employment of FS assets to mission requirements and type of operation ➢ Task organize/clarify responsibilities ➢ Minimize fratricide risk ➢ Synchronize combat power at decisive points	• Recommend proposed organization for combat and command relationships for subordinate force arty units
	❑ Prepare COA statement and sketches	• Prepare FS portion of COA sketch ➢ Portray how FS will assist in mission success ➢ Provide overview of FS capabilities, limitations, and requirements ➢ Show concept of fires[8]/FSCM/CPs/ displacement, etc. • Consult with force arty to verify prior to briefing	• Provide input/confirm FA portion of FS COA sketches, to include: ➢ Positioning, survivability, BDA, communications, and CSS requirements ➢ Refinement of HVT/HPTs for each COA ➢ Critical FA nodes, TAI/NAIs, etc. ➢ Initial identification for movement, positioning of FA attack, TA, and CSS assets ➢ Establishment of FSCMs
	4. **COA Analysis (Wargame)**		
	❑ Gather tools	• Collect and make available for each COA: FS estimate, FS portion of event templates, TVA results	• CofS/XO supervises collection of planning tools - includes LPB/IPB products/estimates/higher HQ info/etc.
	❑ List all friendly forces	• Confirm available FS assets for all COAs, to include command relationships and constraints	• Confirm availability of all FA assets

Note:
8-The concept of fires should identify the who (generic tasks organization), what (tasks), when, where, how, and why (purpose) for each subordinate FS element.

LEGEND:
❑ Action(s) during one of seven MDMP steps
• Action(s)/output by force FS elements/FA CPs
➢ Supporting actions/output

Figure 6-1. Force - FA CP Interfaces During the Military Decision-Making Process Continued

Planning Phase (continued)	4. **COA Analysis (Wargame) (cont)**		
	❑ List assumptions	• Validate FS-relevant facts/assumptions	• Validate FS-relevant facts/assumptions
	❑ List known critical events and decision points	• Determine FS contribution in support of essential tasks identified during mission analysis/COA development (FS NAI/TAIs, EFSTs)	• Determine FA contribution in support of essential tasks identified during mission analysis/COA development (FA NAI/TAIs, EFATs)
	❑ Determine evaluation criteria	• Identify factors measuring effectiveness/efficiency of FS contribution for COA success and failure	• Identify factors measuring effectiveness/efficiency of FA contribution for COA success and failure
	❑ Select wargaming method	• As determined by G3/S3/TSOP	• As determined by FA G3/S3/TSOP
	❑ Select method to record and display results	• As determined by G3/S3/TSOP	• As determined by FA G3/S3/TSOP
	❑ Wargame the battle and assess results	• Identify risks and required CS/CSS assets for each COA • Analyze FS events two echelons down • Record wargame results and refine concepts of fires into scheme of fires for each COA: ➢ HVTs/HPTs and FS portion of event templates ➢ FA attack guidance/synchronization matrix ➢ FS portion of decision support template • Use record results to identify COA strength and weaknesses from FS perspective • Confirm FS organization for each COA and HPT: ➢ Draft HPTL, AGM, TSS	• Wargame COA focused on refining the FA elements of the concepts of fires into schemes of fires: ➢ Integrate FA CSS considerations ➢ Use FA-focused situation, event, and decision support templates and other TVA products ➢ Refine FA position, displacement, and survivability requirements ➢ Monitor development of HPTs by FSC/force targeting team • Ensure scheme of fires for each COA is sound from FA perspective; advise force HQ accordingly
	5. **COA Comparison**		
	❑ Analyze/evaluate COAs from functional perspective	• Analyze each COA, compare strength/weaknesses, and highlight advantages/disadvantages from FS perspective • Assess risks	• Analyze each COA, compare strength/weaknesses, and highlight advantages/disadvantages from FA perspective • Identify probability/severity of FA related fratricides/other hazards; establish control measures; review FSCMs; and advise FSC/FSE
	❑ Wargame briefing (other staff officers)	• Brief results of FS analysis: ➢ Most advantageous COA from FS perspective ➢ Adequacy of schemes of fires and supporting assets (CSS, protection, etc.)	• Brief results of wargame, analyses, and comparison to other FA staff members
	❑ Staff/CofS recommends preferred COA to commander	• FSC/FSE enters briefing with updated FS estimate	• Brief results of wargame and analyses to FA commander

LEGEND:
❑ Action(s) during one of seven MDMP steps
• Action(s)/output by force FS elements/FA CPs
➢ Supporting actions/output

Figure 6-1. Force - FA CP Interfaces During the Military Decision-Making Process Continued

Planning Phase (continued)	6. **COA Approval**		
	❑ Staff/CofS recommends preferred COA to commander	• Assess implications and take actions as necessary: ➢ Finalize selected scheme of fire, etc. or reenter planning process ➢ Finalize HPTL, AGM, TSS, etc.	• Force HQ decision brief preferably attended by force arty representative
	❑ Commander issues additional guidance, to include: ➢ CS/CSS priorities. ➢ Rehearsals and orders preparations.	• Proceed with detailed rehearsal preparations (combined arms and FS)	• Assess force commander's decision and guidance
	❑ Staff issues third WARNO	• Supplement WARNO with FS-specified guidance	• Assess content of third WARNO
	7. **Orders Production**		
	❑ Staff refines selected COA, completes plan, and issues orders. Produces clear: ➢ Concept of operations ➢ Scheme of maneuver ➢ Scheme of FS ➢ Scheme of support (CSS)	• Expand scheme of fires into FS plan, reflecting current events, guidance, and capabilities • Confirm: ➢ Specific command and control relationships ➢ FA tactical mission assignments ➢ HPTL, AGM, TSS, execution responsibilities ➢ Intelligence collection plan ➢ BDA requirements • Assist subordinate staffs/units with planning and coordination	• Staff proceeds with concurrent development of FA support plan: ➢ Task organizes/assigns mission in accordance with (IAW) force HQ guidance. ➢ Approves level of acceptable risks. • Commander approves FA support plan for: ➢ Dispatch to force HQ and integration into force FS plan/OPLAN/OPORD ➢ Use by subordinate elements/others participating in planned fires • Staff/commander review subordinate unit plans for compliance
	❑ Commander reviews and approves OPORD	• Distribute OPLAN/OPORD • Present FS portion of OPLAN briefing[9]	• Force HQ OPORD brief preferably attended by force artillery representative

Note:
9-FS orders brief will normally include scheme of fires; EFSTs/HPTs/HPTL; purpose for fires; availability of FS/CSS assets, status, allocation and priority; clearance of fires procedures; AGM; FSCMs; cutoff time for target refinement; rehearsal instructions; communications/retransmission requirements.

LEGEND:
❑ Action(s) during one of seven MDMP steps • Action(s)/output by force FS elements/FA CPs ➢ Supporting actions/output

Figure 6-1. Force - FA CP Interfaces During the Military Decision-Making Process Continued

Preparation Phase (D3A Detect Function)	7. **Orders Production (cont)**		
	❑ Commander/staff supervise preparations; maintain continuity between current and future operations	• FSCOORD/DFSCOORD supervise preparations to include implementation of risk management controls	• FA command group and FA CPs supervise preparations, maintain current info on friendly/enemy situation and status of current battle.
	❑ Proceed with published OPLAN/OPORD or enter into MDMP under constrained conditions	• FSC/FSE/DOCC implement FS plan or adjust as required by evolving situation with FRAGOs, etc.	• Corps arty/div arty/FA brigade CP: ➢ Implement FA support plan or adjust as required. ➢ Continue reconnaissance efforts, movements, and displacements ➢ Coordinate and conduct met, TA, survey and CSS operations ➢ Maintain commander's and staff estimates/LPB/IPB
	❑ Detect/track targets; process intelligence information; focus on HPTs	• FSC/FSE/DOCC implement FS plan or adjust as required by evolving situation with FRAGOs, etc. • TA assets find/track specific targets	• FA G2/S2: ➢ Ensures continuing FA target coverage. ➢ Establishes/refines target locations; keeps FSC/FSE/FAIO informed • FA TA assets find/track specific targets
	❑ Conduct validity checks	• Validate/refine targeting products on basis of more accurate/additional info (HPTL, AGM, etc.); pass latest information to FA CPs • ACE/FAIO and FSC/FSE/DOCC respond to information requests within capability • Continue to develop targets for corps arty; pass information to corps arty/firing units	• Corps arty/div arty/FA brigade(s) adjust FA support plan as necessary • FA G2/S2 requests FA targeting info from systems/agencies not under FA control • Corps arty/FA brigade(s) integrate targets into FA support plan for engagement during execution phase • Confirm satisfactory progress of synchronization and integration (liaison, organization for combat, FA security, movements/positioning, CSS, etc.)

LEGEND:
❑ Action(s) during one of seven MDMP steps
• Action(s)/output by force FS elements/FA CPs
➢ Supporting actions/output

Figure 6-1. Force - FA CP Interfaces During the Military Decision-Making Process Continued

	7. **Orders Production (cont)**		
Preparation Phase (continued)	❑ Conduct rehearsals - **no wargame**	• Participate in combined arms rehearsals. Verify: ➢ Synchronization/integration of FS with other BOS (maneuver, CSS, ADA, C2, etc.) ➢ FS HPTs/EFSTs, AGM, and friend/foe locations ➢ FSCMs, ROE, and clearance of fire procedures. ➢ TA plan and BDA requirements • Conduct FS rehearsals: ➢ Refine FS plan and targets, check movements, positioning, and protection of FS assets ➢ Pass FRAGO changes to corps arty/div arty CPs • Be prepared to assume responsibilities as alternate CP or for selected CP functions	• Participate in combined arms/FS rehearsals (time permitting): ➢ Integrate latest info/guidance into FA support plan • Conduct FA tactical/digital rehearsals with focus on: ➢ METT-TC update ➢ Positioning of FA firing, CSS, TA elements ➢ Routes/order of march/movement times ➢ Observation/survey support ➢ Availability of fire units and CSS ➢ Validation of FSCM/ROE/air corridors ➢ Updated target lists/schedules ➢ Communication assets, retransmission sites, and alternate nets ➢ Access to and connectivity with acquisition assets/agencies ➢ Observation/survey support • FA commander conducts back briefs to enhance understanding
Execution Phase (D3A Detect, Deliver, and Access Functions)	❑ Engage HPTs	• FSC/FSE/DOCC direct FA CPs/delivery units to engage HPTs if meeting attack criteria (TSS and attack guidance) ➢ Corps executes targets under centralized control (e.g., ATACMS) with execution orders sent to executing elements ➢ Targets under decentralized control are passed to appropriate echelon (div arty/FA brigade) directly from TA source/processing agencies • FSC/FSE fills requirements within context of available resources and commander's intent • Engage targets of opportunity	• Maintain commander's/staff estimates current (status, capabilities, and limitations of organic, attached or reinforcing elements) • Corps arty/FA brigade/fire unit(s) execute fire mission (FM), record FM, update ammunition status; reposition FA assets with direction/pace of maneuver elements and deep/rear battle requirements • Div arty/FA brigade(s) execute • Process/forward requests for additional FS to the force FSC/FSE • Validate FM against HPTL, TSS, attack guidance, ROE, FSCMs, execution matrix, etc. • Engage targets after appropriate positive clearance of fires by maneuver elements ➢ Observation/survey support ➢ Availability of fire units and CSS

LEGEND:
❑ Action(s) during one of seven MDMP steps
• Action(s)/output by force FS elements/FA CPs
➢ Supporting actions/output

Figure 6-1. Force - FA CP Interfaces During the Military Decision-Making Process Continued

Execution Phase (continued)	❑ Supervise implementation of risk management controls	• Supervise implementation and analyze effectiveness of FS risk management controls	• Supervise implementation and analyze effectiveness of FA risk management controls • Continue to refine FSCM/positive clearance of fires procedures and understanding of ROE/IFF procedures
	❑ Conduct BDA	• Assess whether targeting objectives have been met; plan additional fires as required • If necessary, reengage targets to meet targeting objectives	• Pass BDA info from FA TA assets to FSC/FSE/DOCC • Request BDA support from higher HQ as appropriate • Reengage targets as directed
LEGEND: ❑ Action(s) during one of seven MDMP steps		• Action(s)/output by force FS elements/FA CPs	➢ Supporting actions/output

Figure 6-1. Force - FA CP Interfaces During the Military Decision-Making Process Continued

SECTION III - FIELD ARTILLERY PLANNING CONSIDERATIONS

FIELD ARTILLERY-FOCUSED INTELLIGENCE PREPARATION OF THE BATTLEFIELD

GENERAL

6-46. Within the current force structure, based on their requirements, different echelons use different collectors and use intelligence from other echelons. Force commanders drive the command's intelligence effort by clearly designating their critical intelligence requirements, issuing targeting guidance, and ensuring that the intelligence BOS is synchronized and integrated with the maneuver and FS BOS. Through the IPB, the force G2 participates in laying the foundation for the force HQ targeting and decision-making process, identifying critical enemy nodes in support of close, deep, and rear operations. In turn, the force HQ initiated IPB becomes a primary information source for corps arty, div arty, and lower level G2s/S2s in a two-way flow of information. Force HQ IPBs assist in the preparation and refinement of FA-focused IPBs and FA intelligence estimates and enhance FA survivability and mobility options.

FA-FOCUSED IPB DEVELOPMENT

6-47. The FA-focused IPB is a systematic approach to analyze the impact of the enemy, weather, and terrain on FA operations and to evaluate the enemy's FA capabilities and vulnerabilities. It must be consistent with force IPBs, regardless of whether force and FA CPs are collocated or physically separated. The process is cyclic with all functions performed continuously and simultaneously at each command echelon.

6-48. Every effort must be made to provide FA IPB products to the FA commander and other FA CP staff members to expedite their planning efforts. As resident experts on the employment of enemy FA attack and TA systems, force artillery G2s/S2s must also work closely with force G2s/S2s, FAIOs, FSCs/FSEs, DOCCs, and targeting teams to confirm, deny, or further develop enemy FA intentions. In addition, corps arty and div artys should rapidly pass all relevant IPB products and critical intelligence information developed at their HQ or received from higher or adjacent formations to facilitate the IPB process in subordinate and/or supporting FA brigades and battalions.

6-49. Specific steps taken to develop an IPB in support of a newly received mission normally consists of the following:

6-50. While continuing the IPB process in support of current operations, FA G2s/S2s determine the force artillery's AO/area of interest in coordination with the FA G3/S3. They review higher HQ guidance to determine how the new mission affects current FA intelligence operations. Using existing IPB products and current METT-TC factors, they make an initial assessment of how the new AO will influence friendly and threat FA operations.

6-51. Responding to the FA commander's initial priority information requirements in support of target and situation development, mission analysis, and COA development, they identify gaps in current intelligence holdings. To meet any additional requirements, they consider organic collection assets and

request assistance from higher, lower, and adjacent intelligence agencies, as necessary.

6-52. In a close dialogue with force HQ, FA G2s/S2s obtain and refine force IPB products with focus on FA operational requirements. Included are:

- Enemy mobility corridors.
- MCOOs.
- Imagery and other aerial photography.
- Climatic summary from the staff weather officer.

6-53. With access to such additional information, they now conduct an in-depth evaluation of how the battlefield impacts on friendly and threat FA operations within the designated AO/area of interest to include terrain and weather, the local population, and the enemy's infrastructure. Definition of the enemy's FA OB is followed by an assessment of how the enemy may use his FA assets in support of enemy COAs. In the process, the following FA-relevant overlays and templates are prepared:

- Enemy ground and air avenues of approach affecting FA formations.
- Obstacles and key terrain in support of FA operations.
- Percent of slope or trafficability.
- Vegetation and hydrology.
- Line-of-sight limitations.
- Effect of weather and terrain on trafficability and friendly and enemy FA operational capabilities.
- Direct enemy threat to FA formations and position areas.

6-54. Resulting FA-focused IPB products should be available for passage to the force HQ in time for integration into ACE IPB products before the force HQ mission analysis brief. These products include the following:

- FA-focused combined obstacle overlay.
- FA-focused avenue of approach overlay.
- Intelligence collection and reconnaissance plans to fill information gaps.
- Enemy FA OB, to include type, composition, disposition, and number of FA units, combat readiness, type weapons, munitions, supporting equipment, range capabilities, CSS assets, strengths, and vulnerabilities.
- FA focused doctrinal template, indicating how threat FA assets normally conduct operations under similar circumstances unconstrained by the effects of the environment.
- FA focused SITTEMP, considering the effects of the environment superimposed on the enemy doctrinal template. This information assists in determining the role of FA assets in support of likely enemy COAs to be briefed upon completion of the force HQ mission analysis.

6-55. As IPB development continues, G2s/S2s should expand SITTEMPs into FA-focused event templates, indicating where significant insights gained from an analysis of these templates should be passed to the ACE and force targeting team to assist in the refinement of friendly COAs. The FA IPB database should also serve as the foundation in preparing FA intelligence estimates and the intelligence TAB to the FA support plan. In addition, IPB products should be used to focus the force artillery collection effort to include:

- Positioning and cuing FA TA radars.
- Identification of NAIs to confirm or deny FA operations in support of enemy COAs and projected enemy FA dispositions.
- Identification of characteristics of the environment that influence friendly and threat FA operations.
- Confirming the area of interest for the force artillery.

For detailed IPB information in support of force operations review FM 34-130, *Intelligence Preparation of the Battlefield*.

THE FA COMMANDER'S AND STAFF ESTIMATES

GENERAL

6-56. Estimates are a critical element in arriving at the FA support plan and in sharing and confirming FA-relevant information within the FA CP and with staff elements and commanders in subordinate, higher, and adjacent commands. They provide a logical process for collecting and analyzing information, leading to insights pointing to COAs most suitable for mission success from an FA perspective.

6-57. Estimate development is a dynamic process, normally using the current estimate as a start point for developing the estimate in support of future operations. Estimates must be continuously reviewed and updated as new information becomes available. Critical new information affecting the validity of current estimates should be immediately shared with all affected personnel. Estimates should be as comprehensive as time and circumstances permit and include risk assessments and force protection considerations. Preparation of effective estimates also presumes that all concerned have a clear understanding of the force commander's intent and guidance for fires (two echelons above) and are fully aware of the force artillery's current task organization, weaknesses, and combat readiness. During mission preparation and execution, estimates also serve as a basis to recommend modification of the FA support plan in response to unforeseen contingencies.

6-58. Both the FA commander and coordinating staff officers prepare an estimate. The commander prepares a mental or written estimate, integrating his personal assessment of the situation while continuing to collect and analyze METT-TC factors. In the process, the staff provides the FA commander with additional information and assists him in reaching decisions by preparing staff estimates within their respective fields of interest. They analyze the influence of METT-TC factors on mission accomplishment, consult and coordinate with other FA TOC/ALOC staff members and external agencies to ensure information is relevant and accurate, and present their estimates normally verbally. This provides the FA commander with a more thorough perspective of critical factors affecting the FA mission. FA staff estimates also serve as an information source supporting the development of the FS estimate and FS plan within the force HQ.

TYPES OF ESTIMATES

FA Commander's Estimate

6-59. Upon receipt of a new mission, the FA commander assesses applicable METT-TC factors to include changes in mission, facts, assumptions, and the tactical situation. He draws on FA staff estimates with particular emphasis on the FA G3's/S3's operations estimate. He expands its scope by assessing the intangibles of leadership, training, and morale and uses it as a tool to crosscheck individual staff estimates. He analyzes all available information to include input from subordinate FA commanders, paying special attention to risk factors, FA force protection requirements, and availability of resources. Using the commander's estimate as a frame of reference, he reaches a decision and:

- Provides planning guidance to FA CP staff members and subordinate units.
- Establishes clear and concise CCIR to reduce uncertainties during mission planning, preparation, and execution. His information requirements normally include the status of the enemy's FA capabilities, TTP, and employment options; the impact of weather and terrain conditions on FA operations; and friendly force capabilities.

The Intelligence Estimate

6-60. The FA intelligence estimate analyzes the enemy situation from the perspective of the enemy FA commander within the command's AO. The FA G2/S2 addresses AO characteristics to include weather and terrain in terms of how they might affect the FA mission and friendly and enemy FA formations. In addition, he considers enemy FA vulnerabilities, the feasibility of various friendly COAs, and opportunities for targeting by both direct and indirect fires. The estimate is the result of a detailed and continuous FA-focused IPB process and is updated as IPB products are revised throughout mission planning, preparation, and execution. It should be made available to the commander and other staff members before they complete their own estimates. Maintaining regular contact with G2s/S2s in subordinate, higher, and adjacent commands, the FA-focused intelligence estimate identifies:

- Threat facts and assumptions as they pertain to FA operations (based on the enemy FA OB and doctrinal template). Included are known and suspected enemy FA locations to include committed, reinforcing, supporting, and supported forces.
- Enemy FA strength, capabilities, and vulnerabilities and their impact on the employment of friendly FA fires to include smoke and obscurants, illumination, and SCATMINE.
- The role that hostile artillery is expected to play in support of enemy COAs.
- Probability of adoption of enemy COAs in order of priority from an FA perspective.
- NAIs, TAIs, and decision points from an FA perspective.
- FA targets/target sets to be attacked.
- FA-specific information collection plan requirements.

The Operations Estimate

6-61. The FA operations estimate draws on other FA staff estimates and serves as the FA G3's/S3's principal tool to analyze factors and events within his area of responsibility and their effect on the FA mission and friendly FA formations. It becomes the basis for the FA commander's estimate and the wargaming of force HQ COAs from an FA perspective. Kept current, it provides a timely and accurate evaluation of the AO and friendly and enemy FA units and should lead to recommendations on how to best use available FA resources. As he develops his estimate, the G3/S3 ensures that he has a clear understanding of the following:

- The status of friendly force artillery units to include locations, combat capabilities and readiness, level of training, degree of mobility, equipment limitations, etc.
- Location, status, and mission of adjacent and supporting FA units.
- The FA commander's initial and restated mission and any follow-on changes in mission, facts, and assumptions.
- The effects of weather on enemy and friendly operations to include the use of FA delivery systems, devices, and equipment.
- The effects of terrain on FA operations to include:
  - Observation of indirect FA fires.
  - Cover and concealment.
  - Road movement requirements, position areas, etc.
  - Communications.
  - Avenues of approach and key terrain features relevant to FA operations.
- The enemy situation to include:
  - Composition of FA assets to include unit identity, number, type and caliber of cannons, missiles, and rockets, and type organization.
  - Disposition of enemy FA firing units and C2, TA, and CSS elements to include committed forces and reinforcements.
  - Potential yield and number of enemy nuclear warheads and quantity and type of chemical and biological agents and delivery means.
  - Vulnerability of force artillery units to enemy NBC, terrorist, and unconventional forces attack.
- Recent significant activities affecting FA operations.
- Peculiarities and weaknesses that might influence the combat effectiveness of friendly and enemy FA units.

6-62. Based on available information, the G3/S3 compares friendly and enemy FA capabilities to determine relative FA combat power to include significant strengths and weaknesses. His findings and conclusions are then presented to members of the FA CP staff, FA command group, and the force FSC/FSE in support of mission analysis, COA development, analysis, and selection, and FA/FS plan development.

6-63. The operations estimate initially drives the employment of available FA resources for each COA under consideration by the force HQ. It outlines how to support the scheme of maneuver with FA fires and establishes tentative FA

requirements, responsibilities, and priorities. After COA selection, it drives the development of the FA support plan. Included are:

- Tentative task organization and missions for subordinate FA elements in support of close, deep, and rear operations.
- Availability of FA resources (e.g., cannons, missiles, and TA assets).
- Enemy FA dispositions and intentions.
- Mobility of supporting FA elements in support of offensive and defensive operations.
- Taskings of Firefinder radars.
- Allocation of resources, weapons, and munitions for counterfire operations and corresponding priorities.
- Identification of FA HPTs from the TVA and IPB.
- Availability and condition of roads and likely FA position areas in preparation for movement and allocation of position areas.
- FA ammunition consumption factors, prepositioning requirements, and FA CSS priorities.
- Survey and met requirements and their effect on the delivery of timely and accurate FA fires.
- Reliability and range of communications.
- Time required for positioning FA delivery systems and technical preparation to engage targets.

The Logistic Estimate

6-64. As a summary of LPB, the FA logistic estimate analyzes logistic factors affecting mission accomplishment in the functional areas of supply, transportation, services, and maintenance. It leads to conclusions and recommendations about the logistical feasibility and risks of the various COAs and the effects of each on FA logistic operations. The availability and distribution of ammunition is a major consideration along with Class III (POL). The estimate must be completed in time to permit timely coordination and delivery of supplies.

6-65. Based on information gathered during the LPB and drawn from the other staff estimates, logistic estimates aim to develop a support concept and to determine the logistical feasibility of various COAs and associated risks. Major classes of supply included in the logistic estimate are Class III (POL), Class IV (construction material), Class V (ammunition), Class VII (major end items), and Class IX (repair parts). Estimates should be designed to answer the following questions:

- How much support does the operation need and of what type?
- What CSS resources to include personnel, maintenance support, and transportation assets are organically available or accessible through lateral or higher organizations?
- What is the physical location of these CSS resources and their availability?
- How will these assets get to where they are needed?
- What are the effects of weather and terrain on friendly supply operations, to include road movements, supply and distribution network, and line of communication?

- What are the preferred locations of ammunition supply points and ammunition transfer points?
- What are the potential effects of NBC attacks on FA logistic support activities?
- What is the maintenance status of subordinate, attached, and supporting units?
- What are the shortfalls and negative impacts?
- What COAs can be supported?
- What is the recommended COA?

6-66. Consumption and transportation requirements are a fundamental part of the CSS analysis. Guidance for computing these requirements can be found in the following publications:

- FM 10-13, *Supply and Services Reference Data*.
- FM 55-15, *Transportation Reference Data*.
- FM 55-30, *Army Motor Transport Units and Operations*.
- FM 100-10, *Combat Service Support*.
- FM 101-10-1/2, *Staff Officers' Field Manual: Organizational, Technical, and Logistical Data*.
- TB 55-46-1, *Standard Characteristics for Transportation of Military Vehicles and Other Oversize/Overweight Equipment*.

6-67. During mission analysis and the subsequent COA development and selection process, resources are compared with requirements building on the CSS estimate process. Shortfalls are evaluated in close coordination with operations planners in the FA TOC to determine their effect on COAs under consideration.

6-68. CSS estimates must be completed in time for commanders to confirm the logistical feasibility of the plan, to modify plans and priorities as necessary, or to take calculated risks. Secondly, estimates must be available to advise force G4s/S4s on the estimated consumption levels, type, and distribution of FA ammunition and to coordinate with other logistic agencies to deliver sufficient supplies on time.

The Personnel Estimate

6-69. The personnel estimate analyzes the impact of personnel and administrative factors on individual and unit effectiveness. It permits the commander to draw conclusions concerning troop preparedness, COA feasibility from the FA G1's/S1's viewpoint, and the effect of each COA on personnel operations. Drawing on the commander's guidance and information provided by the IPB and other staff estimates, the G1/S1 determines significant strength and vulnerabilities in his functional area to include:

- Confirmation of the personnel status of subordinate, attached, and supporting units.
- An initial estimate of losses and when and where they are expected to occur (injured, sick, and wounded).
- Identification of FA personnel constraints associated with each COA to include risks affecting the unit mission.

- Transportation requirements within the G1's/S1's functional area during mission preparation and execution.
- Coordination with personnel agencies to ensure transaction of personnel actions on time.

FA FORCE PROJECTION OPERATIONS

6-70. With almost 70 percent of FA units assigned to the National Guard, the projection of sufficient and combat ready FA forces in response to quick reaction contingency operations assumes a new significance. The following are some of the considerations that should be at the forefront of FA CP planning activities upon alert notification. Additional details are provided in Appendix H.

- Type of regional crisis to which the deployment responds and requirements for benign or forcible entry.
- Active component (AC)-reserve component (RC) mix of alerted force artillery formations.
- Results of the FA-focused IPB, based on the latest available information, to include force and FA vulnerabilities and host nation force protection responsibilities and capabilities.
- Identification of CCIR for consideration by the FA commander in support of FA operations in the new AO.
- Compliance with alert, recall, and accountability procedures for force artillery elements in accordance with unit TSOP to include mobilization activities and assistance required by supporting FA National Guard forces to reach combat ready status.
- Required actions to fill personnel and equipment shortages and transportation requirements in close coordination with installation deployment support agencies. This includes identification of requirements for special clothing and equipment and disposition of excess supplies and equipment.
- Priorities for cross-leveling equipment, UBL, FA munitions, and other essential supplies to sustain units during the lodgment and expansion phases.
- FA CP confirmation of the deployment sequence of subordinate FA formations and their flow into the theater of operations based on higher HQ guidance on task organizations.
- Tailoring of FA advance parties and the main body based on type of entry operation, strategic lift, prepositioned assets, availability of intermediate staging bases, and availability of host nation infrastructure assets.
- Determining requirements for additional individual and collective training to reach required mission capabilities consistent with the deployment schedule. This includes assistance for FA RC formations by non-deploying AC FA elements.
- Rehearsing deployment operations and other assigned missions such as reception, staging, onward movement, and integration (RSOI) activities. This includes AO-specific threats, critical individual and collective tasks, ROE, cultural considerations and the dissemination of available information on the enemy, environment, and people.

- Ensuring unit preparations for overseas movement and combat ready certification requirements have been met.
- Coordinating force artillery protection and other support requirements with deployment support agencies at departure and arrival airfields and/or seaports and en route.
- Modifying existing plans in accordance with higher HQ deployment orders and instructions.
- Automation compatibility (e.g., AFATDS-equipped interconnectivity with other digital equipment).
- Implementing the deployment plan at the specified time in accordance with higher HQ movement instructions.

FIELD ARTILLERY ORGANIZATION FOR COMBAT

6-71. The force commander's attack guidance helps determine the FA's organization for combat and FA's role in engaging selected targets. Specific artillery command and control relationships are established by the force HQ in the FS plan based on recommendations by force artillery TOCs: corps arty, div arty, or FA brigade. Organizing available FA assets for combat as described in Chapters 1 and 3 and Appendix C sets the conditions for successful task accomplishment.

6-72. The corps commander may augment the fires of subordinate divisions and the corps covering force by establishing command relationships and assigning FA tactical missions based on prevailing METT-TC requirements. The level of FA fires immediately responsive to deployed divisions and maneuver brigades in defensive operations is influenced by:

- Number of committed divisions and brigades and available FA assets.
- Overall corps FA requirements and availability of other types of FS assets.
- Degree of centralized control over FA assets retained by corps.
- Availability of an FA brigade HQ to serve as force artillery HQ in the security area or main thrust sector, or both.
- Div arty requirements for augmentation to establish additional force artillery HQ. Divisions manning their own covering forces usually require additional FA assets to support both the covering force and MBA elements. When an FA brigade serves as the force artillery HQ for the division covering force, the div arty HQ can concern itself primarily with preparations for MBA defenses.
- Frontages and depth of the corps sector. Similar to extended frontages, depth influences the amount and types of required FA support. Deep sectors often demand the use of long-range weapons or positioning in depth to achieve long-range effects continuously.
- Location of the most vulnerable area (flank or center of division sector).

6-73. In the offense, the availability and capabilities of FA units may determine the suitability of friendly avenues of approach, frontage of the assault, number of objectives to be assaulted simultaneously, number of phases, or whether to attack by day or night.

6-74. Based on above considerations, the corps/division FSCOORD, using DFSCOORD and FA G3/S3 recommendations, recommends the organization for combat for FA brigades and battalions under corps/division control.

COMMAND POST AND UNIT POSITIONING AND DISPLACEMENTS

POSITIONING

6-75. Positioning authority is one of the seven inherent responsibilities within the four standard FA tactical missions (Appendix D). The HQ assigning the tactical mission may withhold positioning authority for all but DS units. The purpose is to retain a higher level of control and facilitate execution of o/o or anticipated future missions. If positioning authority is withheld, the unit has a nonstandard tactical mission. Positions for firing units include CPs, unit trains, and firing positions.

6-76. Positioning will be influenced by the enemy's counterfire, air, and ground attack threat. The objective is to provide uninterrupted FA fires and to survive to support current and future operations. The IPB is an important tool for positioning FA units. FA G2s/S2s must identify high-speed enemy avenues of approach, and G3s/S3s should select positions that do not place batteries, FA CPs, or FA CSS elements astride one of these avenues.

6-77. Suitable CP and firing positions are at a premium in forward sectors where all BOSs are actively competing for available terrain. The enemy's counterfire and air threat also increases FA terrain requirements to support survivability moves. Force FA HQ (corps arty/div arty/FA brigade) nominate FA firing positions and CP locations for units with a GS or GSR mission to force FSCs/FSEs. Approval rests with maneuver commanders in whose sector the proposed locations fall. After coordination with force G3s (or S3s at brigade level), FSCs/FSEs pass approved position areas to corps arty/div arty TOCs for further dissemination to GS and GSR artillery units.

6-78. As the brigade commander's most responsive indirect fire assets, DS artillery and reinforcing artillery units have first and second priority for position assignments in maneuver brigade sectors. Brigade FSCOORDs in coordination with supported maneuver commanders position them. Third priority within brigade sectors belongs to divisional units with GS and GSR missions. If the fires of a GSR unit reinforce the DS fires of a maneuver brigade, the GSR unit will have positioning priority over GS units.

6-79. Also, units should be positioned in depth to facilitate deep attack and to provide continuous support as units displace. Also, planners should consider:

- Positions that enhance survivability by using terrain or buildings to protect and conceal physical, thermal, and electromagnetic signatures. Alternate and supplementary positions that provide similar survivability advantages should be selected. Positions are preferred that provide cover and concealment, are trafficable regardless of weather conditions, are located near road networks, and are out-of-sight of enemy observation.
- Positions that do not interfere with other unit missions and facilitate future operations.
- Collocation with maneuver units for mutual support and security.

- A2C2 measures to maximize fires to supported maneuver units. This includes positioning FA elements out of the path of minimum risk routes, air axes for cross-FLOT operations, and/or restricted operations zones (ROZs).
- Avoidance of unnecessary FA concentrations to complicate enemy targeting efforts and reduce the effectiveness of enemy fires.
- Positioning FA units in the zone of the supported unit to improve responsiveness and reduce difficulties in coordinating positions and movement routes into the supported unit's area.
- Communications requirements to include retransmission capabilities, if required by distances and terrain to link supporting and supporting units, sensors, adjacent elements, etc.
- Friendly obstacle plans to ensure all obstacles are covered by fire and to ensure emplacement of FA delivered minefields.
- MLRS positioning requirements (see FM 6-60, *Tactics, Techniques, and Procedures for MLRS Operations*).
- Terrain management to include locations of FA radars, movement routes and times, and supply routes.
- FA position overlays that show areas that do or do not require coordination to occupy or that are not available for occupation.

CP DISPLACEMENTS

6-80. Detailed procedures for displacing corps arty, div arty, and FA brigade CPs vary among units based on personnel and equipment available, the tactical situation, and displacement distances. Detailed procedures should be established in unit TSOP and include specific duties of key personnel during displacements and specific procedures for handoff of FA C3. A primary consideration in displacing corps arty, div arty, and FA brigade CPs is the need for continuous and effective C2, even during continuous movement as in a movement to contact. FA CPs must anticipate, plan in detail, rehearse, and quickly execute displacements. CP displacement planning should consider:

- Designation of an alternate CP. An FA brigade in GS can act as alternate corps arty CP, recognizing that FA brigade CPs have neither radios nor personnel to perform this function fully or over an extended period of time. Unit TSOP should provide for establishing and keeping mutual support with other FA HQ.
- Development of a jump CP capability with organic assets to preclude the requirement to establish an alternate CP. This will require personnel, equipment, and vehicles to be relocated in a "jump" configuration. Remaining elements stay operational at their current location until the jump element is in position and ready to assume responsibilities.
- Rehearsals of CP displacements and synchronization in consonance with the scheme of maneuver and expected enemy actions.
- Short-distance survivability displacements to reduce the time the CP is out of action.
- Incorporating CP displacements into the FA movement matrix and integrating artillery units into maneuver march tables.

- Timing displacements so that CPs are in position and operational during critical points of the battle.
- Potential NBC hazards en route to and at new locations.
- Locating CPs in areas that provide extensive cover and concealment, potentially reducing the need to displace.

TARGETING

FORCE HQ TARGETING

6-81. Targeting is the process of selecting targets and matching the appropriate response on the basis of operational requirements and capabilities. Successful targeting enables the force commander to synchronize intelligence, maneuver, FS, and SOF by attacking the right target at the right time with the best mix of attack and sensor systems and munitions. This includes assets from other services and allies. Similar to estimates and the IPB, targeting is a continuous and integral part of the MDMP. The objective is to disrupt, defeat, or destroy enemy functions and facilities that could interfere with the achievement of friendly goals.

6-82. With the force commander responsible for the command's overall targeting effort, these goals are specified in his attack guidance. In addition to the force commander, key staff elements involved in targeting are the members of the targeting team (G3/S3, G2/S2), FAIO, and FSCOORD, normally under the supervision of the CofS. Other staff officers, including the ALO, ADA officer, SJA, and engineer, also support the targeting process. They help the commander decide what targets to look for, where the targets are expected to be, who can locate those targets, how they will be attacked, and what effects are required. In addition, they identify assets to be allocated and necessary communications channels for passing information among sensors, shooters, and control elements on a real/near-real-time basis. For a detailed discussion of corps FSC operations and targeting at corps level, see FMs 6-20-30 and 6-20-10.

CORPS ARTY TARGETING

6-83. As indicated in Chapters 2 and 4, corps arty TOCs do not perform targeting functions similar to those by div arty and augmented FA brigade TOC targeting elements. At the corps level, the targeting function is accomplished by the targeting team in the corps main CP. The interface between the force main CP and force artillery HQ is facilitated by positioning corps arty CPs near or with corps main CPs. It permits corps arty TOCs to provide essential input to the force HQ targeting process and facilitates the direct passage of FA targets from FSCs/FSEs/DOCCs to corps arty TOCs for action. In turn, corps arty TOCs pass the target(s) to one or more of the firing units under direct corps arty control; incorporate the target(s) into a fire plan for later engagement; or pass the target(s) to one or more of the div artys.

DIV ARTY AND FA BRIGADE TARGETING

6-84. Div arty and FA brigade TOCs target processing procedures depend on the level of available automation. Although AFATDS and IFSAS process target data automatically, div arty and FA brigade CPs must still be able to process incoming target data manually.

6-85. Manual target processing procedures for units not equipped with AFATDS or IFSAS or for use when computers are non-operative are provided in FM 6-20-1. Manual target processing guards against failure of automated systems and provides the capability to process data quickly and accurately even under degraded, manual conditions. On the other hand, automated target processing greatly enhances FA capabilities to process targeting data and engage targets rapidly. In AFATDS/IFSAS-equipped units, target data is transmitted and processed automatically according to the commander's guidance and TSS. For detailed guidance in support of automated target processing see the current USAFAS Special Text for AFATDS.

6-86. The counterfire officer and S2 perform TA planning. They identify TAIs/NAIs for potential surveillance and FA relevant HPTs and HVTs, review current and future TA requirements, and manage the FA targeting intelligence collection effort. The results are included as a tab to the FA support plan. An example TA plan is shown as part of Appendix G.

FA TA ASSET TASKING

6-87. Normally, corps arty and div arty TOCs control organic and attached FA TA resources such as radars and AFSOs. As noted in Chapter 2, FA assets consist primarily of FA controlled WLRs and survey parties. Artillery G2s/S2s may recommend the insertion of FA TA assets into the force collection plan and recommend radar positions, provide cuing guidance, and other means of operational control. COLTs, Strikers, FISTs, forward observers (FOs), and AFSOs may similarly be tasked for specific information through their respective FSEs. Although maneuver scouts, patrols, and ground surveillance radars may not be classified as TA assets, they can also assist in answering FA information requirements. G2/S2s also coordinate with force FSCs/FSEs/DOCCs and the ACE to obtain information from TA assets not under FA control.

6-88. Div arty and FA brigade targeting activities during mission planning, preparation, and execution are significantly influenced by the two-way flow of information with the force HQ targeting team. Top-down guidance developed by force main CPs as part of the D3A targeting methodology includes:

- Taskings for TA sensors and processing facilities to include FA Firefinder radars.
- Trigger events to cue sensor and attack assets.
- Attack means and method of control to include FA rockets, missiles, and cannons.
- Time of attack and desired target effects.
- Requirements for BDA.

COUNTERFIRE OPERATIONS

CORPS COUNTERFIRES

6-89. Corps counterfire assets include elements of the corps arty, corps aviation brigade, Air Force air interdiction and reconnaissance sorties, Army reconnaissance and attack helicopters, and EW. In some situations, and after careful consideration, corps commanders also may temporarily draw on divisional FA assets to support corps counterfire operations. However, diversion

of limited divisional acquisition, processing, and attack assets entails the risk of their destruction and non-availability to support division operations during critical phases. Equally important is the timing of their return to divisional control, particularly in the heat of battle. The return must be carefully planned and coordinated.

6-90. Corps arty contributions to the overall counterfire effort include the responsibility to:

- Implement the organization for combat of corps arty counterfire assets by retaining FA assets at corps level or allocating them to subordinate divisions in accordance with missions and guidance issued by the corps HQ.
- Supervise preparations and execution of counterfire responsibilities by subordinate corps elements within counterfire sectors of responsibility established concurrently with the designation of maneuver boundaries and AOs for subordinate divisions. This includes targets within a division's or adjacent unit's AO, if requests for such support have been submitted and approved by corps. Within capability, corps may also respond to requests for additional fires from adjacent units.
- Detect multiple rocket launcher battalions, helicopter forward operating bases, and other counterfire targets with FA organic assets, reinforced by collectors from the corps' military intelligence brigade, long-range reconnaissance units, and SOF.
- Attack threat FS systems with MLRS and cannon battalions of corps FA brigades to a range of 30 km (60 km for GMLRS). Beyond 30 km, ATACMS, Army aviation, Air Force sorties, and ground maneuver forces may be available for target attack.
- Recommend the acquisition of additional sensor and attack assets from EAC, the joint task force (JTF) commander, or other services.
- Assess the success of efforts to protect friendly units from threat FS systems. As needed, recommend modifications to intelligence collection and attack priorities to enhance force protection through a more effective attack of enemy counterfire targets.

CORPS COUNTERFIRE IN DIVISION AREAS

6-91. By allocating corps assets, issuing attack guidance, and identifying corps HPTs, corps influence how subordinate divisions fight their counterfire battle. They can shape a division's counterfire effort by attacking threat FS systems in depth, providing MLRS and ATACMS fires, and EW support. Within divisional AOs, corps commanders:

- Define areas of counterfire responsibility by establishing boundaries for subordinate units.
- Provide IPB products and critical intelligence information developed at corps or higher and adjacent HQ.
- Attack targets nominated by the divisions or tasked by corps. Corps, after coordination with division FSEs, may attack threat FS targets within divisional AOs by massing fires to achieve required effects (for example, massing fires to neutralize a reconnaissance strike complex). Also, procedures for attacking threat systems firing across boundaries must be

coordinated. However, in all cases the division must orchestrate and give final approval for all corps fire missions within its AO.

- Provide divisions with additional assets for detecting and attacking threat FS systems.

ROLE OF FA BRIGADES IN CORPS COUNTERFIRE OPERATIONS

6-92. Unless specifically task-organized, FA brigades do not possess organic TA capabilities. If divisions assign reinforcing or attached FA brigades the counterfire role, the division must augment the brigade HQ with acquisition and processing assets in the form of Firefinder radars and div arty targeting personnel. Assignment of the counterfire mission should receive prior corps arty concurrence to ensure availability of the FA brigade to perform the counterfire role for the duration of the operation.

6-93. FA brigades retained to support Corps shaping operations will consist primarily of GMLRS and ATACMS equipped units positioned well forward to take advantage of the range of the systems. FA brigades must ensure that reliable and continuous communications links are available to the launchers to support sensor-to-shooter links.

FA COMMUNICATIONS

COMMUNICATIONS NETS

6-94. Reliable communications are central to an unobstructed flow of information and effective battle C2. Effective signal planning increases the commander's options by providing the requisite signal system to pass critical information at decisive times. Appendix I notes the communications assets available to the FA in the form of four communications subsystems for passing information: combat net radio (CNR), area common user system (ACUS), Army data distribution system (ADDS), and the broadcast system. Sample communications architectures for corps arty, FA brigade, and div arty CPs are as indicated in Figures 6-2 and 6-3, respectively. They reflect the communications networks, equipment, and systems described in Appendix I.

6-95. The charts and net descriptions at Appendix I provide a general overview of the various internal and external nets in which corps arty, div arty, and FA brigades operate. The networks matrices indicate which unit elements should be entered in the various networks and at what level of communications (full subscriber, as required). Corps artys and div artys are assumed to be in GS to their supported maneuver commands. FA brigades may be either DS to a maneuver element (maneuver brigade or ACR), R/GSR to a div arty, or in GS to the corps.

COMMUNICATIONS AND ELECTRONICS PLANNING CONSIDERATIONS

6-96. Timely and efficient exchange of information is critical. To ensure an effective flow of information, FA CPs must integrate all available communications assets among supporting and supported CPs, delivery and TA units, and information/intelligence processing centers. In developing the communications plan for a particular mission, commanders and signal officers:

- Analyze the situation.

- Establish communications priorities.
- Allocate organic equipment and request additional support, if needed.
- Publish the communications plan as part of the FA support plan (Appendix G).

FIRE SUPPORT COORDINATING MEASURES

6-97. FSCMs promote the synchronization of FS with maneuver and other BOS and minimize exposure to fratricide. Force commanders employ permissive and restrictive FSCMs to expedite attack of targets; protect forces, populations, critical infrastructure, and sites of religious and cultural significance; deconflict FS operations; and set the stage for future operations. Permissive measures should be placed as close to friendly positions as possible to optimize the employment and effectiveness of all FS means. For example, commanders should place the coordinated fire line (CFL) as close as possible to the FLOT or forward of the lead elements in an attack. The CFL should be consistent with close and deep operations to permit rapid and effective employment of GS and GSR fires and to protect the force. In addition, consider no-fire areas around forward reconnaissance and observation elements such as scouts, COLTs, and FO positions.

6-98. In coordination with superior, subordinate, supporting, and affected commanders, force commanders position and adjust control measures consistent with the location of friendly forces, the concept of operation, and anticipated enemy actions. FSCMs are established by the FSC/FSE during plan development to include consideration of the minimum safe distance of each weapon system. Successive, o/o coordination measures should permit rapid and orderly changes without long delays at critical times. Permissive measures normally require no further detailed coordination for the engagement of targets with conventional means. Restrictive measures impose requirements for specific coordination before engagement of targets. Specific doctrinal FSCMs are discussed in detail in FMs 6-20-30/6-20 and Joint Pub 3-09. In addition, there may exist theater-specific coordination measures to increase responsiveness under selected environments. Examples are the reconnaissance and interdiction planning line (RIPL) in NATO Europe and the deep battle synchronization line (DBSL) in Korea.

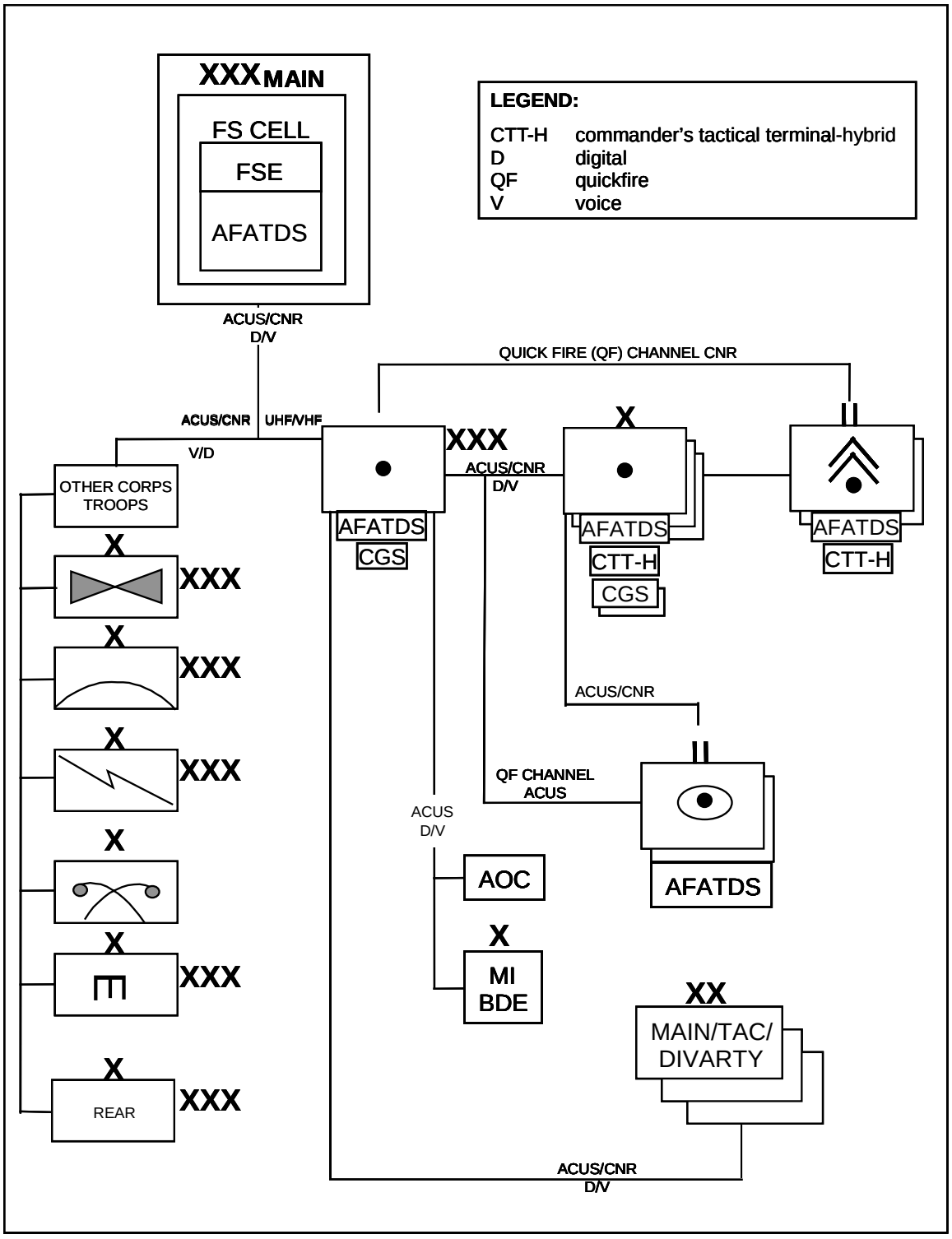

Figure 6-2. Corps Arty to FA Brigade Communications Architecture

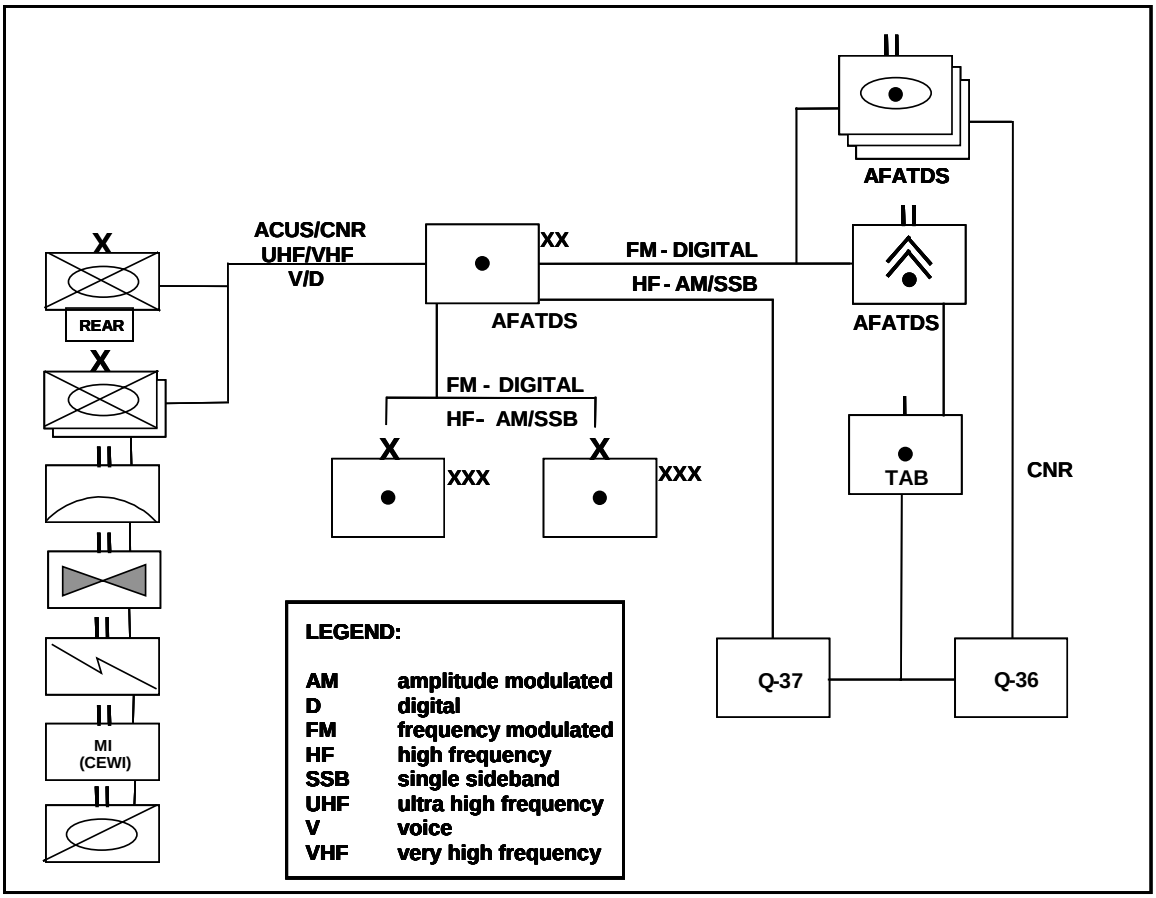

Figure 6-3. Div Arty Communications Architecture

FRATRICIDE PREVENTION AND CLEARANCE OF FIRES

GENERAL

6-99. Fratricide is defined as unforeseen and unintentional death or injury to friendly personnel as a result of employing friendly weapons and munitions with the intent to kill the enemy or destroy his equipment and facilities. Fratricide increases the possibility of mission failure, causes unacceptable loss of personnel and equipment, and erodes leadership effectiveness.

6-100. Minimizing exposure to potential fratricide is a command responsibility. Although the potential for fratricide is greatest during combat when chaos and confusion are at their greatest, it can also occur during training activities and combat simulations. Leaders must be knowledgeable of conditions that cause fratricide and implement fratricide countermeasures regardless of the environment. FA fires must be delivered to meet the commander's intent without inflicting casualties on friendly forces or noncombatants. Efforts must be made to overcome potential hazards such as mistaken identity, navigation errors, or inaccurate or dysfunctional reporting procedures.

6-101. Although weapon systems can detect, engage, and destroy targets at maximum ranges, weapons sighting equipment does not have sufficiently high

resolution of targets at extended ranges, especially under limited visibility conditions. Situational awareness helps overcome this deficiency in part and improve friendly capabilities to positively identify potential targets.

FRATRICIDE COUNTERMEASURES

6-102. Fratricide countermeasures preserve and conserve the force. During the wargaming phase of the MDMP, commanders must identify control measures that can help eliminate or reduce potential fratricide situations. These must be incorporated into orders and plans to subordinate and adjacent commanders. In addition, rehearsals can be used to verify and modify the appropriateness of control measures and to ensure subordinates understand the operation. During execution, FSCs/FSEs/DOCCs and FA TOCs must track the location of friendly elements. This is especially critical during rapidly paced advances such as during attacks, exploitations, or pursuits. Specifics include:

- Individual errors are as simple as mistaken identity. If there is a possibility that enemy and friendly forces are intermixed in the target area, units must positively verify their identity after detection prior to engagement. Weapons errors include lapses in unit and individual discipline that allow powder-charge errors, accidental discharges, incorrect gun data, and similar incidents. Unit errors include errors in the use of weapons-engagement areas or sectors or in using fire control measures.
- Strict adherence to procedural control measures such as permissive and restrictive maneuver and FSCMs. Fratricides can occur when FSCMs are not used, not disseminated, not tied to recognizable terrain features, or unknown.
- Dissemination and receipt of warnings and reports in sufficient time to allow for appropriate actions and synchronization.
- Preclusion of land navigation errors to prevent units from straying out of sector, reporting wrong locations, becoming disoriented, or unknowingly engaging targets out of sector.
- Adequate unit-leader experience. Ensure that junior leaders have the opportunity to gain the necessary experience and judgment to make rapid decisions under ambiguous, stressful conditions. Crews must be properly trained to increase the likelihood that they will not engage friendly forces.
- Special caution during periods of limited daytime visibility and at night.
- Judicious use of materiel solutions, using active and passive measures to provide friendly forces a unique signature to distinguish friend from foe. These may include marking devices and combat vehicle identification systems such as thermal beacons, thermal tape, and navigational aids.

CLEARANCE OF FIRES

6-103. The scheme of fires must also provide for clearance of fires. Clearance of fires ensures that fires attack enemy capabilities at the time, place, and with the effects the commander desires without resulting in casualties to friendly forces or noncombatants. It may be accomplished through a staff process and control measures, embedded in automated battle command systems, or through passive or active recognition systems. It remains a command responsibility at every level. General clearance of fires responsibilities are shown in Table 6-1.

Table 6-1. Clearance of Fires Responsibilities

Position	Responsibility
Maneuver Commander	• Clears fires. Normally this is delegated to their CP and executed by the battle staff under the lead of the FSE.
FSCOORD	• Recommends clearance of fires guidelines to the commander.
FSE/FCE	• Ensures friendly force safety through adherence to ROE, FSCMs and maneuver control measures. Use maneuver control measures and FSCMs to facilitate clearance of fires. • Coordinate for clearance of fires across boundaries as required. • Use automated systems to request clearance of fires. • Warn controlling HQs if FSCMs or commander's attack guidance is about to be violated. • Use rehearsals to validate responsibilities for clearance of fires.

6-104. During the planning process, staff officers must consider how to position sensors not only to gather intelligence but also to support information requirements that will assist in assessment and the clearance of fires. Although sensor placement may primarily focus on gathering enemy information, information collected on friendly forces is equally important.

6-105. Force FSEs coordinate clearance of fires with the maneuver commander. Digital systems are expected to enhance the accuracy and timeliness of situation reporting and significantly contribute to improved situational awareness. It will permit commanders and staff officers to see the battlefield more clearly and to employ positive control measures more efficiently.

6-106. Clear and understandable maneuver control measures are also a significant first step in the clearance of fires. Again, digital systems will enhance the accurate and rapid transmission of these measures. FSCMs not only assist in the integration of fires by facilitating the rapid engagement of targets. They also safeguard friendly forces.

6-107. Permissive measures (if positioned correctly and disseminated to all higher, adjacent and subordinate units), such as CFLs and free fire areas, offer the opportunity for safe responsive fires on targets of opportunity. The size of restrictive measures (no fire areas, restrictive fire areas [RFAs]) should be verified to preclude unwarranted delays for otherwise safe fires.

6-108. A procedure to consider in certain circumstances is pre-clearing fires. In some very specific instances, units can clear fires during the planning phase. Two such instances are: (1) fires into a planned CFFZ resulting from a radar acquisition from that planned CFFZ - the CFFZ must have been planned in advance and published in the radar deployment order (RDO); and (2) fires on a preplanned target, with a definable trigger, against a specific enemy, and according to the scheme of FS.

6-109. When fires are requested that are not pre-cleared or allowed by a permissive FSCM, they must be positively cleared. This procedure should be a

battle drill in CPs. The best method is a redundant drill where a call for clearance is transmitted over two nets, the FS net and the maneuver net.

6-110. Positive clearance of fires is normally facilitated through prior planning, rehearsals, and careful placement of FSCMs. However, the clearance of targets of opportunity often presents special challenges. They must be delivered on short notice without undue delay in responsiveness and without jeopardizing friendly force security. For positive clearance of fires, the following should be obtained:

- Best available method of target location.
- Positive identification of targets as enemy.
- "Eyes on target," if at all possible.
- Clearance from appropriate external elements if target is outside unit boundaries.

ATACMS DECONFLICTION

6-111. ATACMS unlike other munitions requires additional coordination and deconfliction before the missions may be fired. The FA HQ (corps arty, div arty or FA brigade) must be aware of these extra responsibilities when firing ATACMS. There are different procedures used for planned or immediate missions. The artillery headquarters will be required to provide launcher locations for both planned and immediate missions. Launcher locations will be used by the A2C2 elements to request ROZs from the airspace control authority to restrict air operations over the launch areas. Similarly ROZs can be used over predicted ATACMS impact locations. These locations can be determined by the launcher and are identified as the position area hazard (PAH) and target area hazard (TAH). For more detailed information concerning ATACMS deconfliction see FM 3-100.2 (100-103-1), *Multiservice Procedures for Integrated Combat Airspace Command and Control*. The agencies involved in deconflicting ATACMS firings are:

- Corps FSE notifies the corps A2C2 element and ASOC of planned or immediate ATACMS missions.
- Corps A2C2 element deconflicts airspace over the corps area and notifies the BCD.
- BCD deconflicts the ATACMS launches with the joint air operations center (JAOC).
- ASOC determines in CAS aircraft are clear. In not, it clears the aircraft using any means at its disposal.
- JAOC determines if all other aircraft are clear. In not, it clears the aircraft using any means at its disposal.

COMBAT SERVICE SUPPORT PLANNING PROCEDURES

GENERAL

6-112. FA CSS capabilities and requirements are a function of the command's overall organization for combat, unit tactical missions, battlefield dispositions, and COSCOM augmentation of DISCOM capabilities. The responsiveness and effectiveness of CSS will also be affected by the dynamic nature of FA operations. Changing tactical missions and/or command relationships may

frequently reposition corps arty formations and shift CSS responsibilities to different DSAs/BSAs.

6-113. FA G4s/S4s play a significant role in this process by anticipating future requirements and having CSS staffs participate in the planning process from start to finish. They must ensure that all phases of an operation are logistically supportable. However, prior planning and the establishment of priorities are insufficient unless accompanied by aggressive follow-through during execution.

LOGISTIC PREPARATION OF THE BATTLEFIELD

General

6-114. The FA LPB process is intended to identify and assess factors that facilitate, inhibit, or deny support to FA units and to enhance the survivability of CSS assets. It involves the use of IPB products; personnel, supply, and movement planning factors; and planning guidelines. The goal is to determine FA CSS requirements to support the FA support plan by developing logistic estimates and feasible concepts of support. It is a coordinated effort that involves the following steps:

- Determine information requirements to support required actions.
- Determine sources from which raw information can be derived and collect relevant data.
- Analyze collected information and assess its impact on the mission and competing COAs.
- Integrate this information into logistic estimates, the admin-log tab, and FA plans and orders.

LPB Information Sources

6-115. Sources, which can provide relevant data in support of the LPB process, include:

- Higher HQ briefings, plans, and orders.
- Commander's planning guidance.
- Commander's intent.
- Operations and intelligence briefings and overlays.
- MTOEs, status reports, and route reconnaissance overlays.
- Traffic circulation and highway regulation plans.

LPB METT-TC Considerations

6-116. Throughout the LPB process, CSS personnel must be guided by METT-TC considerations to gain the necessary situational awareness. FA CSS METT-TC considerations include the following:

- *Mission*. The mission of CSS personnel is to provide subordinate FA units with assets required to achieve assigned tasks. To provide effective support, FA ALOC personnel must clearly understand the force commander's intent, concept of operations, and scheme of fires. They must know the mission of each supported element, execution times, and current and proposed unit locations. Corps arty and div arty CSS personnel must aggressively anticipate changing support requirements for subordinate, nondivisional FA

brigades and battalions because of frequent changes in tactical missions and operating environments across the corps front. This is essential for timely coordination with CSBs/CSGs, MSBs/FSBs, or COSCOM/DISCOM staffs to shift logistical support assets and responsibilities responsively.

- *Enemy*. Special attention must be paid to the potential impact of enemy actions against friendly CSS capabilities. CSS facilities are easy to detect, limited in mobility, and difficult to protect. Aside from prudent actions to preclude or alleviate disruptions, key CSS assets should be identified and provided an appropriate level of protection. IPB can help identify the vulnerability of plans and forward and rear area CSS sites to enemy action.
- *Troops and support available*. CSS personnel must have a clear understanding of internal and external support assets to include their availability. They significantly affect the feasibility of tactical operations and supporting activities. For example, to plan and coordinate future missions, corps arty and div arty CSS staff members must know the current and projected location, organization, and capabilities of CSGs/CSBs and MSBs/FSBs. This is essential for the efficient transfer of CSS responsibilities between support areas as FA formations are relocated.
- *Terrain and weather*. Terrain and weather will influence the level and type of support required and the manner in which it is provided. For example, snow, rain, and rough terrain slow down CSS activities.
- *Time available*. Experience shows that time available to plan, prepare, and execute CSS operations at the tactical level progressively decreases as one moves down the organizational ladder. Time available to react to mission requirements must be carefully evaluated since it impacts greatly on resource availability and the suitability of supply methods.
- *Civil considerations*. CSS personnel must be cognizant of civilian populace concentrations and their impact on route control and transporting supplies.

Admin-Log Plan Preparation

6-117. To develop and execute sound plans, CSS personnel must achieve and maintain a high degree of situational awareness and initiate actions well before the start of operations they are designed to support. To achieve the required degree of awareness, CSS personnel must gain timely access to accurate information about all factors that influence support requirements and CSS operations during the LPB and logistic estimate processes. Careful management of the information flow demands that information requirements be clearly identified early in the process, vigorously pursued, and shared with all who require access.

6-118. The product of the CSS planning effort should be an admin-log plan that is precise, addressing only deviations from routine procedures established in unit SOP. See Appendix G for an example plan.

FA CSS OFFENSIVE PLANNING CONSIDERATIONS

6-119. The CSS system must do its part to ensure that the offensive momentum is maintained. This can be accomplished by establishing necessary priorities and a flow of supplies and services sufficient to sustain the forward thrust. If the enemy is given an opportunity to recover from the shock of the initial assaults, he may regain the initiative and mount successful counterattacks. For

example, if initial attacks are successful, CSS planners must be sufficiently flexible to support an exploitation or a pursuit. Simultaneously they must consider that changing from one type of offensive operation to another may require major shifts in CSS priorities and support requirements.

6-120. The following FA CSS offensive planning considerations apply to some degree to all offensive operations:

- Focus on weighing the main effort and the resupply of critical items such as fuel and FA ammunition and the provision of medical and maintenance support.
- Position essential CSS assets such as FA ammunition, POL, and maintenance well forward in combat trains and ensure that basic loads remain replenished. If preparations or other large-scale fires are planned to support the initial phase of the attack, consider prestocking firing batteries with ammunition for immediate consumption. At division-level, include requirements for nondivisional R and GSR artillery when positioning CSS assets (for example, ammunition transfer and supply points). Coordinate with CSGs and divisional FSBs and/or MSB elements.
- Anticipate a disruption of resupply during movement to contact. Units should carry sufficient supplies on tactical vehicles to support them through the movement to contact and ensuing battle. Plans should consider the location and access to corps and division CSS assets prepositioned forward to include refuel-on-the-move options and recovery of equipment.
- Establish maintenance priorities on the basis of the commander's guidance and METT-TC factors. Nondivisional artillery must be integrated into the overall maintenance priorities for the attacking force. Priorities may change as offensive phases are completed.
- Plan for increased consumption of POL.
- Push forward preconfigured LOGPAC of essential CSS items. Examples are Class I (water), Class III (bulk and packaged POL), and Class VI (personal demand items). Consider reinforcing corps arty units when designing preconfigured divisional LOGPACs.
- Plan for increased vehicular maintenance, especially over rough terrain or during extreme environmental conditions.
- Make maximum use of unit maintenance personnel and MSTs in forward areas.
- Request unit distribution at forward locations.
- Determine availability and location of major assembly stocks.
- Increase use of meals, ready to eat.
- Use captured enemy supplies and equipment; particularly support vehicles and POL, per command guidance. Before use, test for contamination, tampering, or booby-traps.
- Suspend most field service functions except GRREG and air drops.
- Prepare for increased casualties and additional evacuation requirements.
- Select supply routes, logistics release points (LRPs), and subsequent trains locations on the basis of map reconnaissance.
- Plan and coordinate EPW operations; expect more EPWs.

- Plan replacement operations on the basis of known and projected losses.
- Consider increasing distances and longer travel times to ASPs and ATPs.

FA CSS DEFENSIVE PLANNING CONSIDERATIONS

6-121. As operations shift towards the defense, FA logistical elements should begin to minimize the amount of support forward in the MBA. Corps arty and FA brigade CSS staffs will be primarily concerned with providing needed support to FA battalions engaged in corps-level operations and to divisions in whose area the main enemy effort is expected. Although limited support may be provided by DISCOMs, most support must be coordinated with CSGs. At div arty level, logistical planning involves forecasting and consolidating requirements and coordinating the required support with division G4s and the DISCOM staff.

6-122. FA CSS planning in the defense should consider the following:

- Ammunition availability. Maximize organic haul capability and minimize requirements for resupply. Preposition additional ammunition and plan and coordinate cache sites for limited amounts of ammunition in convenient locations along anticipated routes of withdrawal. Make plans to destroy these stocks, if necessary.
- CCLs. Adjust established CCLs to meet mission requirements, if necessary. For example, if the FA support plan calls for increased use of artillery-delivered smoke, the Class V CCL must be adjusted to provide additional smoke munitions. This may also require a decision on what type of rounds to reduce to accommodate increased smoke allocations.
- ALOC. Displace ALOCs to the rear before the MBA battle is joined to facilitate coordination with DISCOM and CSG elements.
- Location of logistical support units. Coordinate for equipment repair forward or evacuation to the rear as required.
- Prepositioning limited amounts of POL in convenient locations along anticipated routes of withdrawal. Make plans to destroy these stocks, if necessary.
- Reorganization or regeneration of lost CSS capabilities.
- Additional requirements for obtaining and moving Class IV barrier material.
- EPW, casualty, and maintenance collection points and evacuation requirements.

FA CSS HEAVY-LIGHT-HEAVY FORCE MIXES PLANNING CONSIDERATIONS

6-123. Whenever mixing SP artillery with towed artillery from light units, consider the unique operational requirements of each. Protection and survivability, mobility, terrain requirements, liaison, and CSS require detailed analysis and planning. Planners in a light division must remember that a heavy FA unit can move faster and requires more operating space than other elements in a light division. Also, operating procedures of heavy forces are different from those found in light formations.

6-124. Heavy-light or light-heavy force mixes make CSS arrangements especially challenging. When a heavy FA brigade supports a light division,

planners must consider that light division DISCOMs have little, if any, ability to provide the necessary support for heavy FA battalions (primarily Classes III, V, and IX). Even with COSCOM augmentation, light divisions have no tracked vehicles and insufficient means to assist a reinforcing SP artillery battalion or brigade to maintain and sustain itself. In such situations, heavy FA units must be accompanied by mission- and/or unit-specific CSS augmentation packages when arriving in the light division's sector. This includes POL, ammunition, and maintenance support with necessary repair parts, recovery, and lift capabilities. Similarly, a light artillery force supporting a heavy force requires unique support not normally provided by the heavy force. The heavy division must request and provide ammunition (105mm) it does not normally carry. Class III consumption rates, engineer support, and transportation augmentation are also necessary considerations.

6-125. Class IX supplies and maintenance can also present unique CSS planning requirements. For example, a heavy division DISCOM does not have the ASL or maintenance personnel to support 105mm FA howitzer units. As FA battalions move from one brigade or division sector to another, gaining support battalions may require augmentation from losing support battalions to include ASL push packages and additional MSTs. Habitually associated MSTs can facilitate this process. Also, COSCOM transportation assistance may be required to move ASLs from losing to gaining support units.

CLASS V PLANNING CONSIDERATIONS

6-126. Planning Class V requirements and distribution is of particular importance as the largest and most time-sensitive FA CSS task. It consists of determining and establishing required and controlled supply rates, basic loads, ammunition for immediate expenditure, and resupply procedures to sustain the force. Planners must consider that each division forward ATP is normally only capable of handling munitions for one maneuver brigade and its DS artillery battalion. Conversely, rear ATPs, with collocated lift and transload assets, have the required capabilities to manage the high volume and tonnage of corps arty cannon and MLRS munitions. However, with corps arty battalions frequently located forward in brigade sectors in accordance with corps and division battle plans, these essential assets may be out-of-sector. Therefore, CSS staffs must not only position ATPs to support the maneuver plan, but also identify additional COSCOM augmentation assets to support divisional ATPs, if they are to service one or more corps arty battalions (e.g., personnel, material handling equipment, and transportation assets).

6-127. To streamline ammunition transfer operations and make them responsive to unit requests in consonance with current and future mission requirements, commands should also consider establishing CCLs. For example, CCLs transported to a forward ATP may have varying mixes of complete rounds of DPICM, HE, and FASCAM for 155mm howitzer units. CCLs transported to rear ATPs may have varying mixes of complete rounds and rockets and missiles for cannon and MLRS/ATACMS units. If a CCL meets most of the requirements of the requesting unit, it is sent without further handling. (For more information on CCLs, see Chapter 5.)

SURVEY OPERATIONS

6-128. Timely survey operations are essential for the effective massing of fires and first-round fire for effect. All echelons within a corps must coordinate and synchronize their survey plans to ensure that common survey control can be provided to all FA firing and target acquisition units. Grid commonality is desirable with adjacent corps, especially in coalition operations.

6-129. Survey, planning, and coordination originate at the corps SPCE, which is directed by the survey, planning, and coordination officer (SPCO). The SPCE ensures synchronization among topographic engineers, div artys, and nondivisional units and/or systems requiring common control. Coordination and planning by div arty SPCEs are the responsibility of the div arty survey officer who coordinates div arty survey plans with battalion reconnaissance and survey officers (RSOs). FA brigade SPCEs plan and coordinate the interface of internal survey requirements with corps or division SPCEs. Aggressive survey planning that answers who, when, why, and how is essential for success.

6-130. Survey planning must fully consider the following when establishing survey requirements for sensor and attack systems:

- Commander's concept.
- Survey priorities.
- Tactical situation.
- Survey control available.
- Desired accuracy.
- Number of required installations.

Detailed information on survey operations is provided in FM 6-2.

METEOROLOGICAL OPERATIONS

6-131. Current met data must be applied for the delivery of accurate artillery fires, battlefield forecasts, and target acquisition. These data are provided in the form of met messages by FA met sections. During planning, consideration must be given to:

- Commander's concept.
- Mission priorities (type of met data required).
- Tactical situation and security.
- Prevailing winds (they influence met section location).
- Location of supported units.
- Location of other met sections.
- Communications capabilities.

6-132. Corps arty met support coordination and planning begin with the corps arty operations officer. Div arty and FA brigade S3s coordinate positioning and displacement of met sections to ensure continuous met support. This calls for met sections to be located where atmospheric soundings best meet the needs of the supported force. FM 6-15 provides detailed information on met operations.

TARGET ACQUISITION RADAR OPERATIONS

6-133. All collection assets available to the commander must be maximized to support the TA effort. Commanders must consider the vulnerability of FA TA assets and optimize their location by considering threat direction-finding capabilities and enemy artillery ranges.

6-134. AN/TPQ-37 radar sections within CTADs are usually retained under corps arty control with information passed directly to corps targeting elements. The complementary nature of coverage offered by AN/TPQ-37 and AN/TPQ-36 radars leads to a certain degree of centralized control in heavy divisions. (Note: No organic radars at div arty level in airborne, airmobile, and light infantry divisions.) Inherent in the superior-subordinate relationship, div artys normally retain authority to establish, either directly or through a subordinate HQ, the specific zone of coverage for sectors of search and general position areas. The intent is to ensure responsive coverage for the entire division with limited, organic resources.

6-135. AN/TPQ-36 radar sections in heavy divisions may be attached or assigned to DS battalions for administrative and logistical support. When assigned, the radar is considered an integral part of the DS battalion's support package to the maneuver brigade. When attached, the DS battalion may further subattach the section to a subordinate firing battery for security and logistical support. In either case, div arty, or a reinforcing FA brigade HQ with a counterfire mission, provides guidance on positioning and sectors of search. Radar sections organic or assigned to FA battalions in separate brigades or infantry divisions are employed as directed by the FA battalion commander. If a separate maneuver brigade is attached to a heavy division, organic radars remain associated with their parent unit. However, div arty controls their operations in the same manner as divisional radars.

6-136. Centralized control of the Firefinder radars can lead to duplications and an overwhelming volume of targets to be processed. An effective method of reducing the duplication of targets to be processed is the establishment of a common sensor boundary (CSB) for CFFZs. The CSB is a line established by the div arty or FA brigade that divides the target acquisition area into close and deep areas for the AN/TPQ-36 and AN/TPQ-37 radars, respectively. Each radar would be limited to CFFZs on their respective side of the CSB thus eliminating duplications resulting from overlapping acquisition ranges. For additional details on field artillery target acquisition see FM 6-121.

ALTERNATE COMMAND POST CAPABILITIES

6-137. As previously noted, neither corps nor divisions have a subordinate CP fully capable of assuming the functions of the main CP; however, individual, subordinate CPs may be suitably staffed, equipped, and trained to assume responsibility for selective force main CP functions. Potentially effective arrangements for a transfer of main CP functions at division level are shown in the example in Table 6-2.

Table 6-2. Example CP Functions and Designated Alternate

Main CP Function	Designated Alternate
Command Center	Aviation Brigade
G3 Ops/Planning/A2C2	Aviation Brigade
G2 Ops/ASOS	MI Battalion
FSE	Corps Arty/Div Arty
Engineer	Engineer Battalion Staff
ADA	ADA Battalion
NBC Element	Division Chemical Company
Assistant Division Signal Officer	Signal Battalion
G1/G4	DISCOM

SECTION IV - MISSION PREPARATION PHASE

GENERAL

6-138. In both offense and defense, perhaps the most critical stage is the preparation phase focused on directing and influencing the transition from planning to execution. Necessary supporting coordination and synchronization measures must be initiated in the planning phase to preclude major changes during preparation prior to execution. Also, to keep unit efforts focused on mission accomplishment after FA support plan completion, the staff must provide the commander information in the quantity and quality necessary to see the battlefield accurately and track battle preparations.

6-139. Under the FA commander's general supervision, FA elements complete their task organization and deploy in support of close, deep, and rear operations. Necessary combat, CS, and CSS assets are made available on time and in the required quantities and locations before mission execution. Subordinate unit reporting must be consistent and qualitatively acceptable.

VALIDITY CHECKS

6-140. By positioning himself effectively on the battlefield and retaining the ability to communicate with FA and force CPs, the FA commander provides command presence at critical times and places and maintains the currency of his CCIR and estimate. In addition, he conducts visits and inspections of subordinate units as appropriate and monitors the implementation of FA survivability measures.

6-141. In transforming the FA support plan into action, the FA staff must periodically conduct validity checks to ensure the FA support plan remains applicable to the current situation. Validity checks prepare the commander and staff for battle and ensure that they can respond to changes in a flexible manner. If checks confirm the original decisions, the command proceeds with implementation. If not, the commander reassesses the situation based on the latest available information and approves the issuance of WARNOs/FRAGOs as necessary. Validity checks should:

- Confirm the FA-focused IPB and the FA commander's and staff's estimates, and ensure subordinate unit reports are provided consistently and are of acceptable quality.
- Include a personal terrain analysis.
- Assess the impact of current battlefield conditions on future FA operations.
- Monitor preparations of the battlefield to include activities by the FA CP staff, supporting troops, and subordinate leaders such as:
  - Sharing results of reconnaissance and TA efforts. Refine target locations and ensure continued compliance with the force commander's attack criteria. Attend targeting meetings at force HQ and assure a responsive flow of information over established communications channels with higher HQ (FSC/FSE/FAIO, COSCOM/DISCOM, etc.). In the process validate HPTLs, AGM, and any changes to HVTs.
  - Confirming satisfactory progress of force artillery reorganizations, movements, and maintenance and resupply activities. Ensure FA attack, TA, and CSS assets are positioned to support the upcoming battle.
  - Continuing synchronization and coordination efforts initiated during the planning phase.
  - Ensuring all digital systems are updated, targets and FSCM are plotted, and information is expeditiously disseminated to the appropriate levels.
  - Enhancing survivability of FA elements through advantageous positioning, coordination with adjoining maneuver units, and availability of dedicated security or on-call reaction forces.
  - Establishing necessary communications links among detection systems, decision-makers, and delivery systems to expedite engagement of HPTs.
  - Confirming or adjusting friendly and projected enemy FA actions within selected COA(s). Expeditiously update and adjust FA-focused IPB products to include CCIR, enemy OB/doctrinal template, situation event and decision support templates, obstacle overlays, and collection and surveillance plans.
  - Refining FSCMs and positive fire clearance processes to facilitate firing across boundaries. Minimize fratricide potential though detailed coordination and confirm unit awareness of relevant ROE and identification-friend or foe procedures.
  - Establishing liaison with subordinate, supported, and allied elements as required by FA mission assignments or specific instructions in OPORDs.
  - Supervising modifications to the approved FA support plan based on the evolving tactical situation and monitoring their implementation.

FORCE PROTECTION

6-142. During mission preparation, force commanders must ensure adequate security for forward FA assets as they engage the enemy and protect the force at large. Primary FA threats to friendly FA elements will normally be enemy counterfire and air and ground attacks. Force protection options include:

- Dedicated/designated maneuver elements to provide adequate security for MLRS launchers and Firefinder radars, especially in case of significant ground and air threats when dispersion is advisable.
- Clustering of MLRS launchers for self-protection during periods of increased ground threat.
- Improved "shoot and scoot" techniques.
- Closer proximity to maneuver elements.
- Engineer assets to provide survivability and mobility for radars and FA delivery assets.

6-143. The MDMP is the initial point to apportion force protection assets for FA units and systems. This will allow the entire staff to be involved in how it affects the mission. When possible units should standardize force protection packages for planning purposes (see the example in Table 6-3). Additionally, these attachments must be listed in coordinating instructions and specific tasks to subordinate units, not simply Annex D, for clarity and adherence to survivability standards.

Table 6-3. Example Force Protection Packages

Equipment	Force Protection Requirement	Unit Tasked
Q36 Radar	1 Infantry Squad per radar (with transportation)	Supported Maneuver Brigade
Q37 Radar	1 Infantry Squad per radar (with transportation)	1-29 Infantry Division (Light) ID(L)(-)
MLRS	1 Mechanized Platoon per battalion	3d Brigade Combat Team (BCT)
Class V Cache	1 Infantry Squad per cache point	1-29 ID(L)(-)

TARGET TRACKING

6-144. As part of the detect function of the D3A methodology, FA G2/S2s are responsible for monitoring that the targeting process remains focused on assigned FA targets and that adequate assets are allocated to collect the necessary information for attack. Competition for assets is intense. Refinement of targets, based on updated intelligence, reconnaissance, etc., is an essential part of the preparation phase. Determining whether TSS have been met is essential before targets can be attacked.

LOGISTIC PREPARATIONS

6-145. CSS personnel must ensure that CSS preparations do not compromise tactical plans. This includes prepositioning ammunition and POL in convenient locations along anticipated routes of withdrawal or advance, accompanied by plans for their destruction, if required. Resupply should preferably occur during periods of limited visibility to reduce chances of enemy interference. Since ammunition availability will drive the number and type of targets that can be engaged, the commander and staff should closely check the movement, positioning, and protection of FA CSS assets.

REHEARSALS AND BACK BRIEFS

GENERAL

6-146. Successful execution of an operation depends greatly on participants being familiar with all relevant aspects of the OPLAN/OPORD and their ability to identify and correct problems and weaknesses prior to the start of combat operations. Combined arms and FA tactical and digital rehearsals and back briefs are, therefore, critical to the success of both offensive and defensive operations. They should include the "who, what, when, and where" of how FA support is provided. Rehearsal participation of all key individual players and agencies should be mandatory and rehearsal planning, initiated during the planning phase, should make allowance for time required for organizing and conducting rehearsals. To use rehearsals efficiently and effectively in combat, commanders must habitually use them in training with rehearsal techniques and standards clearly established in unit TSOP.

COMBINED ARMS AND FA TACTICAL REHEARSALS

6-147. Rehearsals may take a variety of forms: terrain walks; terrain boards; map rehearsal; radio rehearsal; rock drills; key-leader rehearsal; full rehearsal; etc. Whatever the form of combined arms rehearsals, FA operations must be integrated and synchronized with those of the other members of the FS system, with maneuver units, and with other BOS. During FA tactical rehearsals, the following portions of the FA plan should be rehearsed as a minimum: FA synchronization matrix; FA movement matrix; FA communications structure; reconnaissance and survey plans; schedule of fires; fire plan; logistic support; measures to prevent fratricide and collateral damage; and contingency and on-order missions. Rehearsals should use the most thorough technique possible within the time available. For an overview of preparations and techniques for conducting FA tactical rehearsals see Appendix J.

FA DIGITAL REHEARSALS

6-148. In addition to combined arms/FA tactical rehearsals, digital rehearsals have gained in prominence with the introduction of AFATDS. Their purpose is to verify the digital database and guarantee that AFATDS and other digital systems provide consistently accurate results. They also help validate the time-space relationships of EFATs. For further details see Appendix J.

BACK BRIEFS AND CONFIRMATION BRIEFS

6-149. Rehearsals may incorporate back briefs to assist in the identification and resolution of potential problems prior to execution; however, back briefs do not substitute for either rehearsals or coordination. They are primarily a commander's tool to increase understanding and synchronization through the passage of information.

6-150. During the back brief, each subordinate commander briefs the commander on how he intends to accomplish his mission before he issues his plan to his unit. By briefing and explaining his intent and concept of operations to his higher commander, the higher commander can ensure that his subordinate commander's approach is in harmony with his own. Flaws or potential problems with the operation may also be revealed at this time.

6-151. Back briefs should not be confused with confirmation briefs that commanders use immediately after issuing a plan to determine how well a subordinate commander understands the mission, task, or directive he has just been given. The commander normally requires subordinate commanders to restate what he wants them to do and why. Typically, the confirmation brief occurs at the conclusion of the orders or OPLAN brief when all subordinate commanders are present. The commander adjourns the session only when he is confident his subordinates understand their mission, his and his higher commander's intent, the concept of operation, scheme of maneuver, priorities, the time plan, and type and location of rehearsals.

SECTION V - MISSION EXECUTION PHASE

GENERAL

6-152. Once execution begins, flexibility, resulting from detailed contingency planning and full situational understanding, should facilitate rapid and effective responses to the unexpected. FA commanders, regardless of their location on the battlefield, must provide timely direction and guidance to their staff and subordinate commanders, assuring themselves that subordinate elements are capable of executing the FA support plan. If communications are interrupted, subordinates must act without active supervision, using their best judgment and understanding of the commander's guidance for the delivery of FA fires and adhere to the five fundamentals for employing FA fires in combat. Generally, commanders should restrict their subordinates' freedom of action only to enhance synchronization and minimize exposure to fratricide. Command presence and visibility will continue to be a critical factor throughout execution with the position of the commander influenced by METT-TC conditions and available communications.

INFORMATION EXCHANGE

6-153. During execution, situation updates, WARNOs, and FRAGOs are used to pass CCIR and other intelligence information rapidly. It is crucial to the successful completion of the deliver function of the D3A targeting methodology. Communications channels should provide for redundancy to enhance survivability and ensure receipt of critical transmissions. Feedback and reports by subordinates should be continuous and rapid to expedite decisions and adjustments during battle, based on validation or adjustments of facts, assumptions, CCIR, and staff estimate underpinning the FA support plan. However, to prevent overloading the commander, CPs should first screen information. FA commanders, force FSCs/FSEs/FAIOs, and the CSS support structure should receive regular updates on the FA tactical situation as prescribed by unit TSOP to include the following:

- CCIR.
- Losses.
- Location and combat readiness of FA assets.
- Missions fired and results.

- Ability to adhere to FA timelines and decision points.
- Constraints and limitations, if any, to complete the mission successfully.

CLEARANCE OF FIRES

6-154. Procedures to clear fires rapidly should have been established in the preceding planning and preparation phases. Clear and understandable maneuver control measures and accurate reporting of friendly unit locations will assist in this effort. In addition, digitization should facilitate opportunities for attaining a more accurate and comprehensive picture of the battlefield. To maintain friendly force safety when firing on targets of opportunity, FA delivery units must first receive mission clearance from the appropriate FSEs in force CPs.

TARGET ATTACK

6-155. During the execution phase, targets selected during the planning phase/decide function and detected and tracked during the preparation phase/detect function are attacked if they meet required degrees of accuracy, dwell time, and attack standards and adhere to FSCMs, positive clearance of fire procedures, and ROE. Executing FA CPs, after validation, transmit execution orders through subordinate echelons to the attack system(s). Targets authorized for decentralized control are usually extremely time-sensitive and their selection is normally transmitted to the appropriate FA brigade or MLRS battalion directly from the acquiring sensor or supporting intelligence facility to preclude undue delay in further target processing. Targets under centralized control are often targets with longer dwell time such as ATACMS targets under corps or JTF control.

COUNTERFIRE OPERATIONS

6-156. The corps arty TOC will coordinate countermortar and counterbattery radar positioning and coverage with supported FSC/FSEs and establish QF channels between radars and firing units to rapidly silence enemy indirect fire systems. Corps arty and div arty TOCs will assess the success of ongoing counterfire efforts and recommend to force FSC/FSEs adjustments in force organization, intelligence collection, and/or attack priorities to enhance the attack of enemy counterfire targets.

LOGISTICS OPERATIONS

6-157. Based on the evolving tactical situation, CSS staff members assess adherence to projected timelines and losses and the impact of consumption rates on FA unit effectiveness. By monitoring the availability of vital CSS stocks for organic, attached, and supporting units, they adjust resources to accommodate requirements in support of actual and projected operations within existing constraints. They aggressively coordinate the timely shift of logistics responsibilities and assets in response to changes in FA tactical missions and AOs and monitor recovery operations and the repair of battle damaged systems and equipment.

CP DISPLACEMENTS

6-158. Subject to mission requirements, FA CPs will displace to best control all force artillery operations. In the process, critical functions should be passed to alternate or jump CPs to ensure continuity in the execution of current operations and to preclude any significant degradation in planning and preparation of follow-on missions.

ALTERNATE COMMAND POST OPERATIONS

6-159. If necessary, FA CPs perform alternate CP functions to enable supported maneuver and FA units to sustain operations while surviving elements are reconstituted to reestablish critical C2 functions. When designated as an alternate CP, FA TOCs should be equipped with the communications gear capable of performing critical functions of the destroyed/dysfunctional CP. As the alternate CP, they are normally not expected to support CP displacements. However, designation as the alternate CP and the successful transfer of functions require periodic staff drills to minimize disruptions of C2 capabilities over organic and supporting FA units during execution.

BATTLE DAMAGE ASSESSMENT

6-160. Post strike assessments, initiated during the planning phase, permit the commander and staff to determine whether FA fires have achieved stated targeting objectives within the limits of organic FA resources. BDA is an essential step in the D3A methodology because it measures things objectively that are important to the force commander. FA BDA assets are generally limited to Firefinder radars. Ensuring that feedback and reports by subordinate and supporting units are factual and timely, force artillery CPs assess available BDA results and recommend whether or not to reengage the target(s).

REORGANIZATION AND RECONSTITUTION

6-161. After mission completion, the commander and staff assess the combat readiness of subordinate units, determining residual combat capabilities and requirements for cross leveling and reorganizing FA attack and target acquisition systems.

Appendix A

Field Artillery in Combined Operations

This appendix outlines interoperability considerations for US FA units supporting an allied maneuver force in a multinational environment. Such taskings are commonly called out-of-sector missions and are generally in support of an allied division or corps. To provide the best possible FS, reinforcing US FA units will have to make certain adjustments to adapt to the new operating environment. For information on multinational commands see FM 100-7. Many of the treaties and defense pacts to which the US is a signatory provide for US forces to operate with those of other nations. By definition, combined operations are conducted by forces of two or more allied nations acting together for the accomplishment of a single mission in consonance with formal agreements to achieve broad, long-term objectives. Coalition operations, like combined operations, involve nations that have formed an alliance for a specific purpose, but on a temporary basis in response to often unforeseen events. Operation Desert Storm is an example. In such temporary coalition environments, agreements on doctrine, tactical principles, and operating techniques will probably be only partially developed, if they exist at all. Allied and US forces may, therefore, have to work out interoperability procedures under the pressure of imminent conflict or after initiation of combat operations.

INTEROPERABILITY CONSIDERATIONS

A-1. The terms of rationalization, standardization, and interoperability (RSI) focus allied efforts to resolve national differences to enhance the collective potential. To achieve the desired degree of cohesion, unity of effort, and combat effectiveness and to minimize the potential for fratricides, both alliances and coalitions require ad hoc or more permanent arrangements to harmonize doctrine and TTP. The following considerations facilitate the definition of requirements for delivery of effective fires in support of multinational operations. On-site assessments by FA commanders should include relevant METT-TC conditions to include the anticipated length of out-of-sector missions. For short-term missions, some of the following considerations and associated requirements may not be significant. However, the possibility that short-term missions may be significantly extended should be considered.

COMMUNICATIONS FACTORS

A-2. Communications among FA units and supported allied and/or coalition forces will be significantly affected by differences in languages and terminology, varying interpretations of FA terms and symbols, translation nuances, incompatible communications equipment, and availability of bilingual personnel. For example, while the US distinguishes between suppressive and

neutralization fires, allies, for the most part, do not make such distinction. Increasingly, automation and digitization may also create problems in terms of computer compatibility, gateways, and data and information transfer capabilities. Although past efforts to harmonize multinational C2 doctrine, TTP, and equipment have facilitated the cross-boundary flow of information, difficulties may still arise in even relatively sophisticated environments such as NATO/ABCA.

LANGUAGE REQUIREMENTS

A-3. Exchanging bilingual liaison teams for the duration of out-of-sector missions in accordance with Standardization Agreement (STANAG) 2101, "Principles and Procedures for Establishing Liaison" may be one method to alleviate language problems among NATO formations. Publishing keyword and phrase lists, based on Allied Administrative Publication (AAP)-6, "NATO Glossary of Terms and Definitions" in unit TSOPs may also help solve some of these problems. In addition, extensive use of graphics in place of lengthy verbal descriptions and face-to-face coordination among supporting and supported commanders and staffs will assist with language problems.

COMMUNICATIONS EQUIPMENT INCOMPATIBILITY

A-4. Although incompatible communications equipment among allied forces can create substantial C2 problems, at least some of these can be overcome by in-depth prior planning. Keys to communications success are prior coordination, mutual understanding, and flexibility.

WIRE COMMUNICATIONS

A-5. Despite similarities in various items of telephone equipment, wire communications with allies can still present interoperability problems. Some may be overcome relatively easily through the fabrication or exchange of jack plugs and similar interface devices. Also, at division and corps levels, a dependable, long-range wire system can be established by tapping into existing civilian telephone lines with appropriate junction boxes. Also, differences in voltage and cycles per second between US and allied field telephones may reduce operating ranges from 3.2 km to about 2 km without external power amplification.

AREA COMMON USER SYSTEM ACCESS

A-6. To maintain communications with parent HQ, out-of-sector FA units should maintain ACUS connectivity, if at all possible. Normally, this requires access to an MSE extension node or properly positioning radio access units (RAUs) for continued use of organic radio telephones. For example, FA brigades assigned out-of-sector missions should retain habitually associated MSE connectivity as long as they can establish electronic line of sight with accompanying extension node(s) and RAUs to one of the parent corps' MSE node centers.

COMBAT NET RADIOS

A-7. Despite significant efforts to field compatible radios among NATO's major partners, residual incompatibilities may still present difficulties. Although

many allied radios net with single-channel ground and airborne radio system (SINCGARS) in the frequency-hopping mode, synchronization must be carefully coordinated. For operations with non-members of long-standing alliances, compatible radio communications are largely a question of where they procured their radios. Although tactical military radios nearly always use AM or frequency modulated (FM) equipment, factors such as frequency overlap, squelch, and speech security devices may limit or preclude radio communications between out-of-sector US FA elements and supported coalition forces.

REMEDIES

A-8. In the absence of compatible communications equipment, some interim measures can be taken to alleviate multinational communications interface problems. For example, communications planners should:

- Equip bilingual liaison teams with secure communications gear to facilitate sending and receiving secure transmissions from the supported allied force.
- If available, provide out-of-sector units with TACSAT stations or some other form of point-to-point communications means.
- Have one country provide terminal equipment at both ends of a multichannel system to achieve a complete multichannel interface.
- Use combined SOIs to eliminate country-to-country variations in authentication, coding, and decoding procedures.

ALLIED FIRE SUPPORT DOCTRINE

A-9. Although national doctrine may evolve faster than international agreements, field artillerymen from allied nations must strive to gain a common understanding of potentially contrasting doctrine and TTP. In the absence of prior agreements, problems during coalition operations can at times be best resolved at the lowest applicable level. Any resulting local arrangements should then be reflected in unit SOPs. Also, to ensure effective integration of available FA fires and to mitigate the adverse impact of any doctrinal and/or equipment differences, FA units should strive to participate regularly in combined field training and CP exercises.

TACTICAL FIRE CONTROL AND STANAGS

A-10. To improve standardization and enhance mutual understanding, the US and its NATO and ABCA allies have entered into standardization agreements, known as STANAGs and QSTAGs. NATO STANAG 2934, “Artillery Procedures,” and QSTAG 217, “Tactical Tasks and Responsibilities for the Control of Artillery,” list agreed-upon procedures on how to send, receive, and process fire missions for NATO and ABCA FA units. These agreements represent a major step towards achieving interoperability and advance prospects for the delivery of timely and effective fires in support of coalition operations. These agreements are implemented in the FM 6-20-series manuals.

STANDARD FA MISSION STATEMENTS

A-11. The duties of US field artillerymen are defined in terms of the four standard tactical missions with their associated seven responsibilities. Because

of variances in heritage, organizations, materiel, and doctrine, allied nations may use FA mission statements different from those in the US Army. STANAG 2934 specifies tactical missions and comparable inherent responsibilities for all signer nations against surface targets. These are depicted at Table A-1 below.

A-12. If the stated responsibilities are not fully responsive to the maneuver commander's requirements, one or more may be changed, limited, or expanded. In such cases, the differences shall be clearly stated in the appropriate artillery OPORD or FS annex. If the revisions are so extensive that the original task is no longer recognizable, the new mission statement will address each of the FS responsibilities.

A-13. When supporting allied forces, US artillery units are likely to be assigned a reinforcing mission. This mission may be modified into a nonstandard mission to account for special METT-TC considerations. OPORDs will specify additional tasks and responsibilities for units engaged in out-of-sector operations.

FIRE SUPPORT COORDINATING MEASURES

A-14. To support allied formations with timely, effective fires at the operational and tactical levels, FA commanders must develop, fully understand, and rigidly adhere to a common set of fire control measures.

A-15. The FM 6-20-series manuals contain some FSCMs that have not yet been agreed to by NATO or ABCA. The US proposed the measures coordinated fire line (CFL), restrictive fire line (RFL), and restrictive fire area (RFA) for inclusion in STANAG 2934. The US has entered a reservation by using CFLs in lieu of no-fire lines (NFLs). STANAG 2934, as implemented in the FM 6-20-series FS manuals, includes only the fire support coordination line (FSCL).

IDENTIFICATION OF FRIENDLY FORCES

A-16. Positive identification of friendly forces on the battlefield will be an even bigger challenge when supporting allied formations. To ensure that friendly forces are not mistakenly identified as hostile and fired on by friendly artillery, unit boundaries and AOs must be known and carefully coordinated. Frequent and accurate reporting of unit locations is also a critical factor in preventing fratricide and should be rigidly enforced.

COMBAT SERVICE SUPPORT

A-17. CSS in combined operations is a complex task because CSS remains predominantly a national responsibility. Allied ground force commanders must ensure that their units are adequately supported, particularly in terms of required ammunition, repair parts, and maintenance assistance when under the tactical control of another nationality.

A-18. To overcome at least some of these difficulties, NATO and ABCA partners have reached a certain degree of commonality in areas such as fuels, munitions, and some combat support vehicles. In addition, acquisition and cross-servicing agreements, where they exist, provide for mutual support. However, such arrangements are generally not enough to fully sustain US out-of-sector units operating under allied control.

A-19. Effective support for US out-of-sector FA units requires, therefore, close coordination among allied and US support commands. For example, national CSS elements providing required assistance must be located well forward or within reasonable lateral range to facilitate support operations to include the evacuation of major end items for rebuild, salvage, or replacement.

Table A-1. Tactical Tasks and Responsibilities for Control of Artillery (NATO and ABCA)

Artillery with a Tactical Task of-	Direct Support	General Support	General Support Reinforcing	Reinforcing
Answers Calls for fire in Priority from-	1. Directly supported formation/unit 2. Own observers 3. Force field artillery	1. Force field artillery HQ (1) and target acquisition artillery 2. Own observers	1. Force field artillery HQ (1)	1. Reinforced artillery unit 2. Own observers 3. Force field artillery HQ (1)
Establishes Liaison with-	Directly supported formation/unit (battalion, regiment, and brigade)	No inherent requirement	Reinforced field artillery unit	Reinforced field artillery unit
Establishes Communications with-	The directly supported maneuver formation/unit	No inherent requirement	Reinforced field artillery unit	Reinforced field artillery HQ
Furnishes Forward Observer/Fire Support Teams to-	Each maneuver company of the directly supported formation/unit	No inherent requirement	Reinforced field artillery unit if approved by force field artillery HQ (1) (2)	Upon a request of reinforced field artillery unit (2)
Weapons Moved and Deployed by-	Direct support field artillery unit commander or as ordered by force field artillery HQ (1)	Force field artillery HQ (1)	Force field artillery HQ (1) or reinforced field artillery unit if approved by force field artillery HQ	Reinforced field artillery unit or ordered by force field artillery HQ (1)
Has as its Zone of Fire-	Zone of action of the directly supported formation/unit	Zone of action of the supported formation/unit or zone prescribed	Zone of action of the supported formation/unit to include zone of fire of the reinforced field artillery unit	Zone of fire of reinforced field artillery unit at zone prescribed
Has its Fire Planned by-	Develops own fire plans in coordination with directly supported formation/unit	Force field artillery HQ (1)	Force field artillery HQ (1) or as otherwise specified	Reinforced field artillery unit
Nations to which Terminology Applies-	BE, CA, DA, FR, GE, GR, IT, NL, NO, PO, SP, TU, UK, US	BE, CA, DA, FR, GE, GR, IT, NL, NO, PO, SP, TU, UK, US	BE, CA, DA, FR, GR, IT, NL, PO, SP, TU, UK, US	BE, CA, DA, FR, GE, GR, IT, NL, NO, PO, SP, TU, UK, US

Notes: 1.Force artillery headquarters or higher authority headquarters
2. Applies also to the provision of liaison officers.

Legend: ABCA = Australia, Britain, Canada, America
BE = Belgium
CA = Canada
DA = Denmark
FR = France
GE = Germany
GR = Greece
IT = Italy
NL = Netherlands
NO = Norway
PO = Portugal
SP = Spain
TU = Turkey
UK = United Kingdom
US = United States

Appendix B

Field Artillery Command Relationships

B-1. FA units will be integrated into the Army force structure in accordance with one of the following specific command relationships:

- Organic. FA units are organic when they form an integral part of a military organization as shown in TOEs or MTOEs. Examples are FA cannon howitzer batteries organic to cavalry squadrons in an ACR.
- Assigned. FA units in an assigned status are placed into an organization on a relatively permanent basis. A commander has the same degree of C2 over assigned units as he does over organic units. An example is the FA brigade HHB assigned to a corps.
- Attached. Attached units are placed into an organization on a relatively temporary basis. Subject to limitations stated in the attachment order, the receiving commander has the same degree of control over attached units as he does over organic units. The maneuver unit must provide logistic and administrative support when FA units are attached. An example is an FA brigade attached to an ACR to support a covering force operation.
- OPCON. Generally, OPCON has the same intent as attachment but without the receiving unit assuming responsibility for administrative or logistic support. An example is when an FA battalion is DS to an ACR and the ACR-organic howitzer battery is OPCON to the FA battalion. OPCON is often used between maneuver elements but rarely to establish command relationships among maneuver and FA units.

Appendix C

Field Artillery Organization for Combat

FIVE FUNDAMENTALS

C-1. Organizing FA units for combat is guided by five fundamentals remembered by the memory aid AWIFM:

- **A--**Adequate FA support for committed units.
- **W--**Weight the main attack in the offense or the main effort in the defense.
- **I--**Immediately available FA support for the commander to influence the action.
- **F--**Facilitate future operations.
- **M--**Maximum feasible centralized control.

EXAMPLE

C-2. The following is an example of an FA organization for combat with an explanation of the use of the five fundamentals.

SCENARIO

C-3. On D-Day, H-hour, the corps conducts the main attack (with the 32d Mechanized Division [Mech Div]) in the center sector and the 35th Mech Div (-) conducts the supporting attack to secure the corps eastern flank. The 309th ACR guards the corps western flank where the corps is accepting risk. The 23d Armored (Armd) Div will follow the main attack as the corps reserve and the 1st Brigade (Bde)/35th Mech Div will be the corps TCF.

FA TROOP LIST

C-4. The corps troop list includes the FA formations shown in Figure C-1.

35th Mech Div	32d Mech Div	23d Armd Div	209th ACR	Supporting Corps Arty Elements
35th Div Arty 3 x 155 DS battalions 1 x Div MLRS battalion (MLRS/TA)	32d Div Arty 3 x 155 DS battalions 1 x Div MLRS battalion (MLRS/TA)	23d Div Arty 3 x 155 DS battalions 1 x Div MLRS battalion (MLRS/TA)	3 x 155 howitzer batteries	63d FA Bde 2 x 155 battalions 1 x MLRS battalion 61st FA Bde 2 x MLRS battalions
Note: All units are fictitious, and the scenario has been kept general to enhance the understanding of organizing FA for combat.				

Figure C-1. Example of Corps FA Troop List

ADEQUATE FA SUPPORT FOR COMMITTED UNITS

C-5. FA support is most responsive to committed maneuver elements when given a DS tactical mission. In this scenario, all maneuver units are initially committed with the exception of the 23d Armored Division as the corps reserve. Not changing the command relationship or assigning a tactical mission to the div artys provides adequate FA support for committed units. The div artys automatically assume the tactical mission of DS and the ACR howitzer batteries remain under the control of the ACR commander. The TCF is considered a committed unit and has its habitually associated DS battalion for support. An example organization for combat is provided in Figure C-2.

35th Mech Div (-)	32d Mech Div	309th ACR	1/35th Mech Bde (TCF)
35th Mech Div Arty (-) 2-31 FA (155, SP) DS 2 Bde 2-32 FA (155, SP) DS 3 Bde 2-33 FA (MLRS/TA) GS	32d Mech Div Arty 1-30 FA (155, SP) DS 1 Bde 1-31 FA (155, SP) DS 2 Bde 1-32 FA (155, SP) DS 3 Bde 1-33 FA (MLRS/TA) GS	1 Howitzer Battery 2 Howitzer Battery 3 Howitzer Battery	2-30 FA (155, SP) DS 1 Bde

Figure C-2. Example of Adequate Support to Committed Units

WEIGHT THE MAIN ATTACK IN THE OFFENSE OR THE MAIN EFFORT IN THE DEFENSE

C-6. This fundamental is implemented by assigning a tactical mission of R or GSR to FA units to provide additional responsive fires for subordinate elements (Table C-3). It can also be implemented by providing positioning guidance to FA units and assigning azimuths of fire to concentrate fire in the main attack sector or zone. This allows units with the tactical mission of GS to add weight to the main attack or strength to the defensive main effort. In this scenario, the corps commander adds weight to the main attack by assigning an R tactical mission to one of his FA brigades. Since the corps commander gave the FA brigade a tactical mission of R, the FA brigade commander cannot sub-assign tactical missions to the attached battalions unless specifically authorized by the corps commander. The only way that div arty commanders can sub-assign tactical missions to battalions in an FA brigade is if it is attached to the division. (Note: Only changes or additions are shown in Figure C-3; a complete roll-up will be at the end of this example).

32d Mech Div	
32d Mech Div Arty	63d FA Bde: R 32d Div Arty
1-30 FA (155, SP) DS 1 Bde	1-631 FA (155, SP)
1-31 FA (155, SP) DS 2 Bde	1-632 FA (155, SP)
1-32 FA (155, SP) DS 3 Bde	1-662 FA (MLRS
1-33 FA (MLRS/TA) GS	

Figure C-3. Example of Weighting the Main Effort

IMMEDIATELY AVAILABLE FA SUPPORT FOR THE COMMANDER TO INFLUENCE THE ACTION

C-7. The force FA commander (in this scenario the corps FA commander) should retain direct control over some artillery which the force commander can use to influence the action. This is accomplished by assigning GS, GSR, or nonstandard tactical missions to artillery units. In the scenario, two new units have been placed under corps control. Additionally, the commander continues to add weight to the main attack by assigning a GSR tactical mission to the 23d Div Arty in support of the 32d Div Arty as shown in the example in Figure C-4.

61st FA BDE: GS	**23d Armd Div Arty: GSR 32d Mech Div Arty**
1-633 FA (MLRS)	3-30 FA (155, SP) DS 1Bde
1-634 FA (MLRS)	3-31 FA (155, SP) DS 2 Bde
	3-32 FA (155, SP) DS 3 Bde
	3/33 FA (MLRS/TA) GS

Figure C-4. Example of Retention of Immediately Available FA Support

FACILITATE FUTURE OPERATIONS

C-8. This fundamental guarantees the smooth transition from one phase to another. Assigning o/o tactical missions, positioning artillery, and allocating CSS resources accomplish this. On-order tactical missions help units anticipate FA support needs in future situations. Another method of facilitating future operations is to modify the current tactical mission by anticipating future

requirements such as limiting ammunition expenditures relative to the CSR. Examples of possible o/o tactical missions are included in Figure C-5.

32d Mech Div Arty	23d Armd Div Arty	63d FA Bde
1-30 FA (155, SP) DS 1 Bde 1-31 FA (155, SP) DS 2 Bde 1-32 FA (155, SP) DS 3 Bde 1-33 FA (MLRS/TA) GS o/o GS	GSR 32d Mech o/o DS 23d Armd Division 3-30 FA (155, SP) DS 1 Bde 3-31 FA (155, SP) DS 2 Bde 3-32 FA (155, SP) DS 3 Bde 3/33 FA (MLRS/TA) GS	R 32d Div Arty o/o R 23d Armd Div Arty 1-631 FA (155, SP) 1-632 FA (155, SP) 1-662 FA (MLRS)

Figure C-5. Example of Facilitating Future Operations

MAXIMUM FEASIBLE CENTRALIZED CONTROL

C-9. FA is most effective when control is centralized at the highest force level. Centralized control of FA allows flexibility in its employment to the force as a whole. However, this scenario is based on an offensive situation calling for as much reinforcing fire as possible based on the fact that friendly forces have a good knowledge of the enemy situation and positions. In the scenario the corps has given up most of its artillery and has only retained two MLRS battalions and the 23d Armd Div Arty. (Even with a GSR tactical mission in support of current operations, corps arty retained centralized control while weighting the main attack.) If this were a defensive scenario, then more of the 63d FA Bde would be kept under corps control (GSR instead of R), giving the corps commander the flexibility to respond to a less defined enemy situation. The final FA organization for combat in this scenario is shown in Figure C-6.

MAIN EFFORT	SUPPORTING EFFORTS	FUTURE OPERATIONS
32nd Mech Div 32nd Mech Div Arty 1-30 FA (155, SP) DS 1 Bde 2-30 FA (155, SP) DS 2 Bde 3-30 FA (155, SP) DS 3 Bde 1-33 FA (MLRS/TA) GS	**35th Mech Div (-)** 35th Mech Div Arty 2-31 FA (155, SP) DS 2 Bde 2-32 FA (155, SP) DS 3 Bde 2-33 FA (MLRS/TA)	**23rd Armd Div Arty** o/o DS 23rd Armd Div 3-30 FA (155, SP) DS 1 Bde 3-31 FA (155, SP) DS 2 Bde 3-32 FA (155, SP) DS 3 Bde 3-33 FA (MLRS/TA) GS
63rd FA Bde: R 32nd Mech Div Arty 1-631 FA (155, SP) 1-632 FA (155, SP) 1-662 FA (MLRS)	**TCF** 1/35th Mech Bde 2-30 FA (155, SP) DS	**32nd Mech Div Arty** o/o GS
23rd Armd Div Arty: GSR 32nd Div Arty 3-30 FA (155, SP) 3-31 FA (155, SP) 3-32 FA (155, SP) 3-33 FA (MLRS/TA)	**309th ACR** 1 Howitzer Battery (155, SP) 2 Howitzer Battery (155, SP) 3 Howitzer Battery (155, SP)	**63rd FA Bde** o/o R 23rd Div Arty 1-631 FA (155, SP) 1-632 FA (155, SP) 1-662 FA (MLRS)
	Corps Arty 61st FA Bde: GS 1-633 FA (MLRS) 1-634 FA (MLRS)	

Figure C-6. Example of FA Organization for Combat

Appendix D

Field Artillery Tactical Missions

STANDARD TACTICAL MISSIONS

D-1. FA units to include FA brigades may be assigned the following tactical missions. Unless specifically authorized by the corps arty commander, reinforced units do not have the authority to subassign tactical missions to or establish QF channels for the battalions of reinforcing FA brigades. Also, each of these relationships requires unit commanders to comply with seven specific responsibilities as indicated at Table D-1. If required, nonstandard tactical missions may more adequately address special maneuver force FS requirements.

Table D-1. Seven Inherent Responsibilities of Field Artillery Tactical Missions

AN FA UNIT WITH A TACTICAL MISSION OF-	DIRECT SUPPORT	REINFORCING	GENERAL SUPPORT REINFORCING	GENERAL SUPPORT
Answers calls for fire in priority from-	1. Supported unit 2. Own observers[1] 3. Force FA HQ	1. Reinforced FA 2. Own observers[1] 3. Force FA HQ	1. Force FA HQ 2. Reinforced unit 3. Own observers[1]	1. Force FA HQ 2. Own observers[1]
Has as its zone of fire-	Zone of action of supported unit.	Zone of fire of reinforced FA.	Zone of action of supported unit to include zone of fire of reinforced FA unit.	Zone of action of supported unit.
Furnishes fire support personnel[2]	Provides temporary replacements for causality losses as required.	No requirement.	No requirement.	No requirement.
Furnishes liaison to-	No requirement.	Reinforced FA unit HQ.	Reinforced FA unit HQ.	No requirement
Establishes communication with-	Company fire support officers (FSOs) and supported maneuver unit HQ.	Reinforced FA unit HQ.	Reinforced FA unit HQ.	No requirement.
Is positioned by-	DS FA unit commander or as ordered by force HQ.	Reinforced FA unit or as ordered by force FA HQ.	Force FA HQ or reinforced FA unit if approved by force FA HQ.	Force FA HQ.
Has its fires planned by-	Develops own fire plan.	Reinforced FA unit HQ.	Force FA HQ.	Force FA HQ.

[1] Includes all TA means not deployed with supported unit (radar, aerial observers, survey parties, and so on).
[2] An FSE for each maneuver brigade, battalion, or cavalry squadron and one FIST with each maneuver company or ground cavalry troop are trained and deployed by the FA unit authorized these assets. FO teams are provided by USMC artillery battalions to each company-sized maneuver unit upon deployment. After deployment, FISTs and FSEs remain with the supported maneuver unit throughout the conflict.

- Direct Support.
  - DS is the most decentralized tactical mission. An FA unit in DS of a maneuver unit is concerned mainly with the FS needs of only that unit. The DS commander is the FSCOORD for the supported maneuver unit. He plans fires to support the maneuver commander's intent and positions his unit where it can best support the scheme of maneuver. To enhance coordination and training, FA units should habitually support the same maneuver force.
  - Example: FA brigades may be placed DS to a division and/or maneuver brigade, task force, or ACR. This could occur in the area of the enemy's main effort; to strengthen a defensive sector; in support of river crossing operations; when the division operates across an extended frontage; or when a maneuver brigade is leading a division exploitation, pursuit, or deep attack.
- Reinforcing.
  - R tactical missions require FA units to augment the fires of another FA unit. When a DS FA battalion requires more fires to meet maneuver force requirements, another FA battalion or an FA brigade may be assigned this tactical mission.
  - Example: An FA brigade reinforcing another FA unit provides responsive fires to the reinforced unit while the HQ assigning the tactical mission retains C2.
- General Support Reinforcing. The HQ assigning GSR tactical missions retains control over GSR units and has first call on supporting fires. Subordinate FA units receive augmentation fires in second priority. The GSR tactical mission gives the force commander additional flexibility to respond to varying tactical situations.
- General Support.
  - GS tactical missions are the most centralized of the standard tactical missions. An FA unit with a GS tactical mission supports the force as a whole and remains under the control of its parent force artillery HQ. Its fires are immediately responsive to the needs of the force commander.
  - Example: An FA brigade with only missile battalions or rocket and missile battalions may be assigned this tactical mission in support of corps deep operations.

NONSTANDARD TACTICAL MISSIONS

D-2. If a commander's intent cannot be adequately met by one of the standard tactical missions, standard tactical missions can be modified for additional flexibility to meet maneuver force support requirements. Changing, modifying, or amplifying one or more of the seven inherent responsibilities or spelling out contingencies not covered by those responsibilities creates nonstandard tactical missions. If the revision of tactical missions is so complex that the standard tactical mission is no longer recognizable, nonstandard tactical mission statements will address each of the seven inherent responsibilities. OPORDs must state nonstandard tactical missions, when applicable, as part of the organization for combat, to delineate inherent responsibilities clearly.

Appendix E

Artillery Headquarters and Headquarters Batteries

SECTION I - CORPS ARTY HEADQUARTERS AND HEADQUARTERS BATTERY

MISSION

E-1. The mission of the corps arty HQ is to exercise C2 over FA units retained directly under corps control and plan, integrate, and coordinate FS for the corps. The HQ battery provides the personnel and unit administrative and logistical support for the staff sections and operational elements.

CORPS ARTY HEADQUARTERS

E-2. As indicated in Figure E-1, the corps arty HQ consists of several functional organizations responsible for planning, supervising, coordinating, and controlling the fires of FA units not assigned or attached to subordinate elements of the corps. They are:

- Command section. This section consists of the corps arty commander and his personal staff to include the deputy corps arty commander, staff judge advocate, chaplain, command sergeant major, and the commander's personal enlisted staff, supervised by an aide.
- CofS section. This section administers the daily operations of the command section. The CofS is responsible for the administration of the CP as a whole.
- TOC. The corps arty TOC, under the supervision of the assistant chief of staff (ACofS) G3 (operations) and ACofS G2 (intelligence), helps the corps arty commander exercise control over FA elements retained under corps. The fire control and operations-intelligence cells control FA fires and operations while the plans cell focuses on future operations.
- SPCE. The SPCE coordinates the extension of survey control within corps arty from higher-to-lower echelons. It ensures that each weapon- and target-locating system within the corps and subordinate divisions is on the same surveyed grid and that a common grid is established with adjacent corps, if possible.

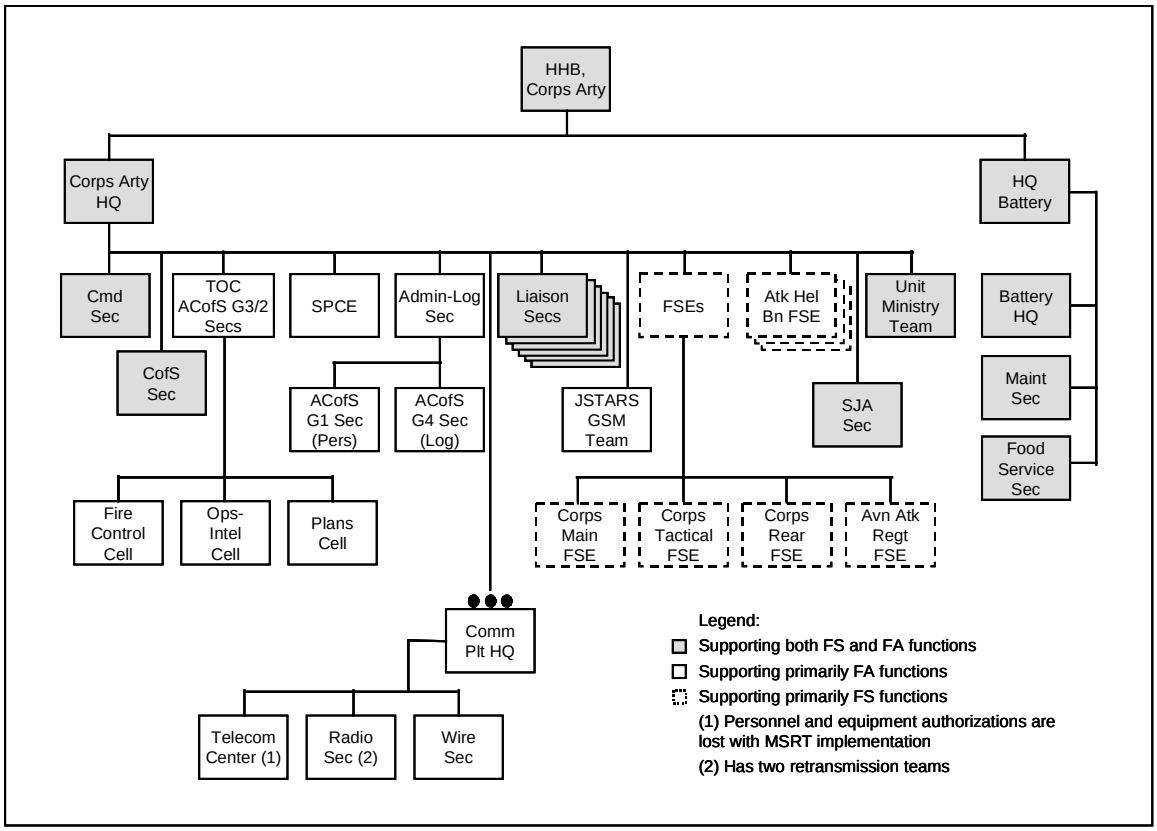

Figure E-1. Corps Artillery Headquarters and Headquarters Battery

- ALOC. The ALOC exercises its responsibilities under the supervision of the ACofS G4 (logistics) and ACofS Gl (personnel). They advise the corps arty commander and coordinate and direct, as appropriate, the execution of corps arty logistic and personnel activities.
- Communications platoon. The platoon consists of a platoon HQ and telecommunications, radio, and wire sections to support corps arty CP communications requirements internally and with higher, subordinate, and adjacent units.
- JSTARS GSM team. Corps arty is authorized one GSM team to receive and process information received from the airborne radar.
- Liaison sections. Six liaison sections establish required interfaces with supported or reinforced units as directed by the corps arty commander.
- FSEs. The corps arty HHB provides FA personnel to help man FSEs at corps main, tactical, and rear CPs. FA personnel in the forward tactical CP monitor and control the execution of FS operations supporting the close battle while counterparts in the corps main CP plan, integrate, and coordinate future FS operations. Rear and attack helicopter battalion CP FSEs plan, coordinate, and supervise the execution of rear area and attack helicopter FS operations, respectively. For further details see FMs 6-20-30 and 71-100.

- Staff judge advocate (SJA) Section. This section provides operational law advice and legal services in military justice, international law, administrative law, civil law (including contract law, fiscal law, and environmental law), claims, and legal assistance. The SJA receives legal technical supervision and support from the Corps SJA. In addition, the US Army Trial Judiciary and US Army Trial Defense Service, two independent legal organizations, provide military judge and trial defense services respectively.
- Unit ministry team (UMT). The UMT consists of a chaplain and one chaplain assistant. The UMT facilitates and coordinates religious support across the corps arty AO. The UMT works directly for the commander. The chaplain serves as the special/personal staff officer to plan, synchronize, coordinate and provide personally delivered religious support within the commander's area of responsibility. The chaplain assistant prepares the religious support annex and synchronizes the implementation of the religious support duties.

HEADQUARTERS BATTERY

E-3. The HQ battery consists of the following sections:

- Battery HQ. The battery HQ provides the C2 element for the HHB. It consists of the HHB commander, first sergeant, and battery enlisted personnel to accomplish administrative and sustainment requirements.
- Maintenance section. The maintenance section provides the maintenance capability for organic HHB vehicles.
- Food service section. The food service section provides food service support for HHB personnel.

Note: The maintenance and food service sections and the communications platoon do not fulfill the full support requirements of the corps arty. Substantial medical support augmentation is required from corps medical units. Communications augmentation comes from the corps signal brigade.

SECTION II - DIV ARTY HEADQUARTERS AND HEADQUARTERS BATTERY

MISSION

E-4. The mission of div arty HQ in light infantry, air assault, airborne, and heavy divisions is to provide command, control, and supervision over div arty operations and those of attached and reinforcing units. The headquarters battery provides personnel, administrative, and logistical support for div arty staff functions.

DIV ARTY HEADQUARTERS

E-5. The div arty HQ staff assists the commander in planning, coordinating, and executing FS and FA fires for supported maneuver units. The primary organizational elements in infantry and heavy div artys are as indicated in Figure E-2 and below:

- Command section. This section consists of the div arty commander's personal staff. They include the executive officer, chaplain, and command sergeant major.
- TOC section. Under the overall supervision of the div arty S3 and assisted by the S2, the TOC section plans, coordinates, directs, and controls the fires of all FA fires supporting the division. It is organized into three elements: operations, fire control, and targeting.
- Admin-log section. This section plans, coordinates, and supervises the div arty's administrative and logistic activities under the supervision of the S1 and S4 staff officers.
- Communications platoon. The communications platoon in heavy div artys consists of a platoon HQ, radio section, and wire section. The communications platoon in light, airborne, and air assault div artys consists of only a platoon HQ and radio section.
- SPCE. The SPCE in heavy divisions consists of the RSO and chief surveyor who supervise two PADS teams. Their primary mission is to establish battalion survey control points and an orienting line for assigned or attached firing and target-locating units. In infantry divisions, a chief surveyor controls survey operations.
- Met sections. Two met sections provide met support within the division area.

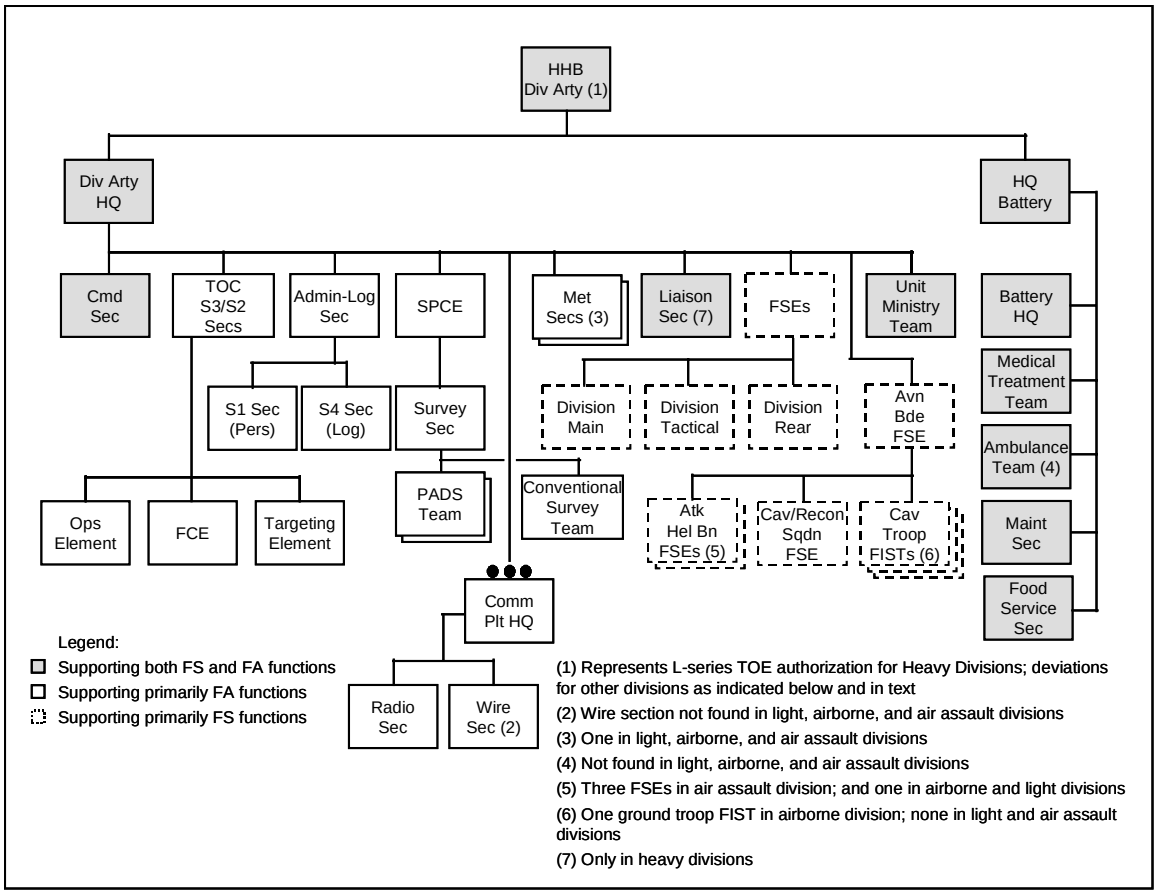

Figure E-2. Division Artillery Headquarters and Headquarters Battery

- Liaison section. This section coordinates with adjacent and supported units on FA matters in heavy divisions, exchanges data, and coordinates fires across division boundaries. They are not authorized in light, airborne, and air assault infantry divisions.
- FSEs. FSEs in main, tactical, and division rear CPs plan, coordinate, and monitor FS for the division. See FM 6-20-30 for detailed information on division FSE operations.
- COLTs. The light infantry div arty is authorized three COLTs with none in their DS battalions. The heavy, airborne, and air assault div arty COLTs are in their DS battalions with none in the div arty HHB.
- Fire support sections/elements. The div arty provides FS sections/elements for the divisional aviation brigade, cavalry squadron, and attack helicopter battalions of the heavy division as indicated in Figure E-2.
- Unit ministry team. The unit ministry team consists of a chaplain and one chaplain assistant. The UMT facilitates and coordinates religious support across the div arty AO. The UMT works directly for the commander. The chaplain serves as the special/personal staff officer to plan, synchronize, coordinate and provide personally delivered religious support within the commander's area of responsibility. The chaplain assistant prepares the

religious support annex and synchronizes the implementation of the religious support duties.

HEADQUARTERS BATTERY

E-6. The div arty battery HQ element consists of the following sections:

- Battery HQ. The battery HQ provides the C2 element for the HHB. It consists of the HHB commander, first sergeant, and battery enlisted staff to address battery administrative and support requirements.
- Medical treatment and ambulance teams. The medical treatment team operates an aid station and provides for the immediate medical needs of HHB personnel. The ambulance team, which is only authorized in heavy divisions, is responsible for intra-unit evacuation. Light, airborne, and air assault div artys receive air ambulance support from their division's medical battalions.
- Maintenance section. The maintenance section of the HHB provides the maintenance capability for HHB organic vehicles.
- Food service section. The HHB food service section provides food service support for HHB personnel.

SECTION III - FA BRIGADE HEADQUARTERS AND HEADQUARTERS BATTERY

MISSION

E-7. The mission of the FA brigade HHB is to provide command, control and administrative supervision for up to six organic and/or attached FA units. This includes providing met data to organic and supported units and dispatching liaison teams to adjacent force artillery HQ and reinforcing units. It also coordinates CSS requirements for attached FA battalions. As in the case of corps arty and div arty HHBs, FA brigade HHBs are organized into a brigade HQ and a HQ battery (Figure E-3).

BRIGADE HEADQUARTERS

E-8. The primary organizational elements within the brigade headquarters are:

- Command section. This section consists of the FA brigade commander's personal staff to include the XO, chaplain, SJA, field surgeon, and command sergeant major.
- HQ support section. This section corresponds to the admin-log section of the other HHBs and is responsible for similar functions.
- TOC. The TOC controls and coordinates the operations of brigade subordinate FA battalions and supporting elements such as survey and met sections. The FA brigade TOC consists of an operations, fire control, and targeting elements, which function under the overall supervision of the S3 supported by the S2.
- SPCE. With no organic survey teams, the SPCE is limited to coordinating survey operations for subordinate elements in support of corps arty and div arty survey plans.

- Met section. The one authorized section can support FA battalions in a given area such as a portion of a division's sector. Coordination is made with the supported unit's S3 or the S3 in whose area the brigade operates.

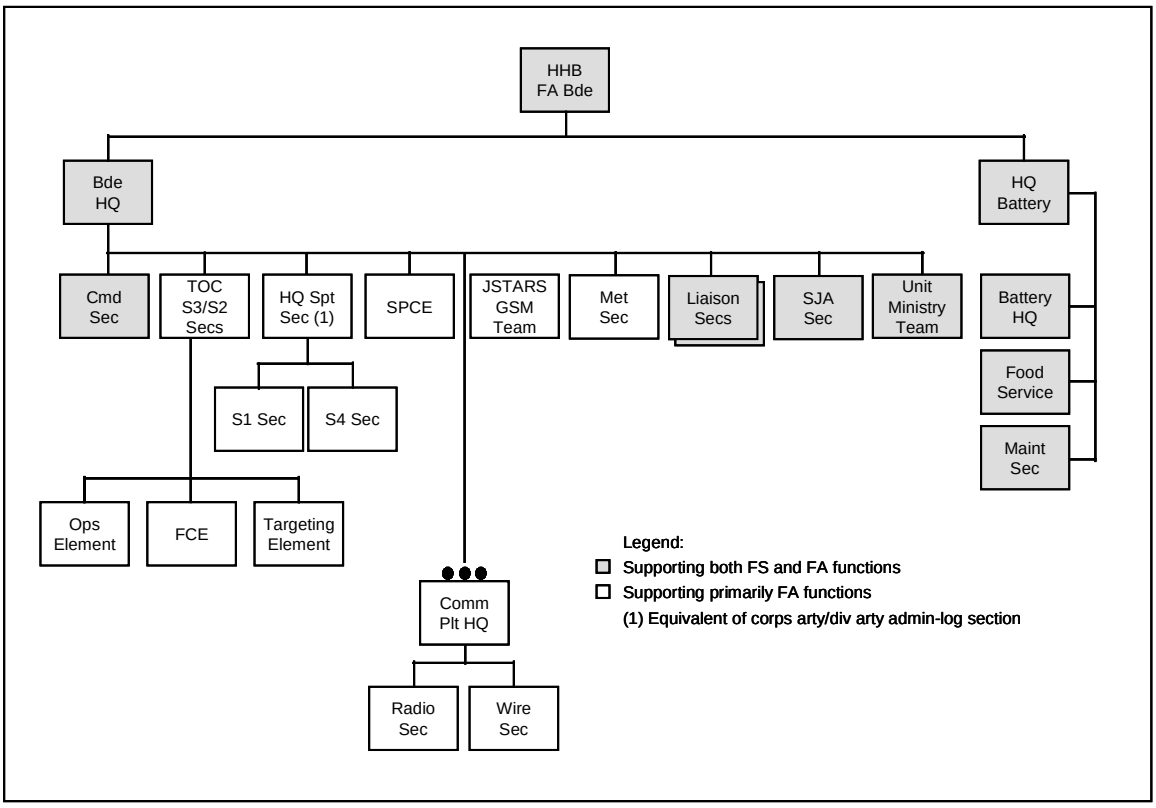

Figure E-3. FA Brigade Headquarters and Headquarters Battery

- Communications platoon. The FA brigade communications platoon supports the brigade's internal and external communications requirements.
- JSTAR GSM team. Each FA brigade is authorized one GSM team to receive and process information directly from the airborne radar.
- Liaison section. This section consists of two teams, each headed by a liaison officer.
- Unit ministry team. The unit ministry team consists of a chaplain and one chaplain assistant. The UMT facilitates and coordinates religious support across the FA Bde AO. The UMT works directly for the commander. The chaplain serves as the special/personal staff officer to plan, synchronize, coordinate and provide personally delivered religious support within the commander's area of responsibility. The chaplain assistant prepares the religious support annex and synchronizes the implementation of the religious support duties.
- SJA section. This section, manned by a trial counsel and legal NCO, provides operational law advice, and either provides or coordinates legal support in military justice, international law, administrative law, civil law (including contract law, fiscal law, and environmental law), claims, and

legal assistance. In addition, the US Army Trial Judiciary and US Army Trial Defense Service, two independent legal organizations, provide military judge and trial defense services, respectively.

HEADQUARTERS BATTERY

E-9. The FA brigade battery HQ consists of the following sections:

- Battery HQ. The battery HQ is the HHB C2 element responsible for the technical supervision of unit maintenance operations, unit administration, food service activities, and support operations for organic and attached units. It consists of the HHB commander, first sergeant, and battery enlisted staff.
- Maintenance section. The maintenance section of the HHB provides maintenance support for HHB organic vehicles.
- Food service section. The food service section provides the necessary food support for personnel of the brigade HQ.

SECTION IV - USMC ARTILLERY REGIMENT HEADQUARTERS BATTERY

MISSION

E-10. The mission of the Marine artillery regiment HQ is to provide command, control, and supervision over regimental operations and those of attached and reinforcing units. The HQ battery provides personnel and unit administrative and logistical support for regimental staff functions.

REGIMENTAL HEADQUARTERS

E-11. The regimental staff assists the commander in the planning, coordination, and execution of FS for the supported maneuver units. The primary organizational elements in the regimental HQ are as indicated in Figure E-4.

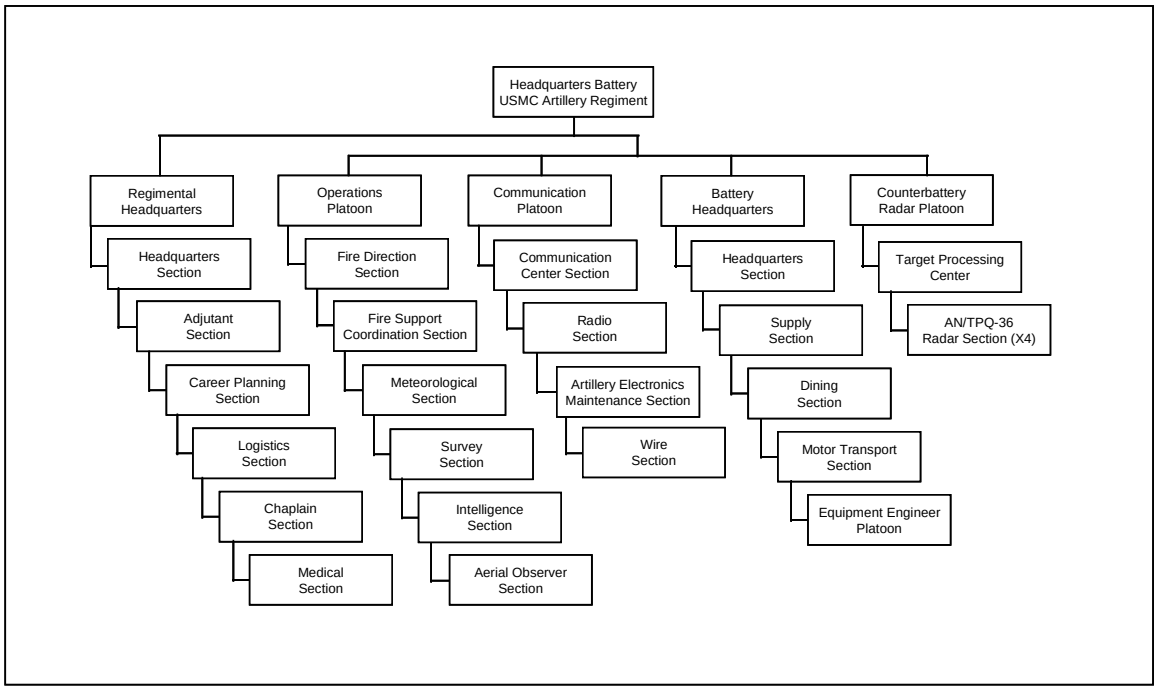

Figure E-4. Marine Artillery Regiment Headquarters Battery

- Regimental HQ
  - HQ section. This section consists of the regimental commander, executive officer, and sergeant major.
  - Adjutant section. This section plans, coordinates, and supervises the regiment's administrative and personnel activities under the supervision of the adjutant and personnel officer.
  - Career planning section. This section coordinates and supervises regimental career planning activities.
  - Logistics section. Under the overall supervision of the S4 officer, this section plans, coordinates, and supervises regimental combat service support activities. Key personnel include the ordnance officer, the maintenance management officer, the supply officer, the motor transport officer, and the FA chief.
  - Chaplain section. Under the supervision of the regimental chaplain, a Navy officer, this section coordinates the regiment's religious programs.
  - Medical section. The regimental medical officer heads this section that is responsible for establishing the regimental aid station, which provides medical support to the regimental HQ and technical supervision and coordination of all medical activities within the regiment.
- Operations platoon. Under the overall supervision of the regimental S3, the platoon plans, coordinates, directs, and controls FS functions of the regimental HQ.

- Fire direction section. Under the supervision of the regimental fire direction officer, this section plans, coordinates, directs, and controls the fires of all artillery units supporting the division.
- FS coordination section. The regiment provides the FS coordination section to the division. This section, led by the assistant division FS coordinator, plans, coordinates, and monitors FS for the division.
- Met section. Under the supervision of the regimental met officer, this section plans and coordinates the positioning of regimental met assets to support the artillery regiment. This section coordinates the acquisition and dissemination of met information to support the division.
- Survey section. Under the supervision of the regimental survey officer, this section plans, coordinates, and implements the regimental survey plan. The survey section establishes and/or extends survey control to artillery units and other units, as required; distributes survey information; and exchanges survey data with the survey sections of higher, lower, and adjacent units.
- Intelligence section. The regimental S2 officer supervises the operations of the intelligence section that provides artillery target intelligence and the coordination of TA and observation efforts.
- Aerial observer section. When manned, this section provides an aerial observer capability in support of the division's FS activities.

- Communications platoon. Under the supervision of the regimental communications officer, the platoon develops, coordinates, and implements the regimental communications plan.
  - Communications center section. This section mans the regimental COC communications center. It monitors and coordinates the flow of all messages traffic through the regimental COC.
  - Radio section. The radio section operates and maintains the regimental HQ radio equipment.
  - Artillery electronic maintenance section. This section provides organizational maintenance support for the regiment's radio, wire, computer, and counter mortar radar equipment.
  - Wire section. The wire section operates and maintains the regimental HQ wire communications equipment.
- Battery HQ. The HQ section provides the C2 element for the HQ battery. It consists of the HQ battery commander, first sergeant, battery gunnery sergeant, and battery enlisted staff to address battery administrative support.
  - Supply section. This section manages the supply support for the regimental HQ.
  - Dining section. This section provides food service support to the regimental HQ and coordinates all regimental food service activities.
  - Motor transport section. This section provides motor transport maintenance for the regimental headquarters motor transport assets.
  - Engineer equipment platoon. This platoon operates and maintains the regiment's organic engineering assets including generators, forklifts, decontamination equipment, and bulldozers.

- Counterbattery radar platoon. Under the supervision of the counterbattery radar platoon commander, the platoon, consisting of four AN/TPQ-36 radar sections, is employed where it can best support the TA requirements of the division. The targeting processing center collocates with the regimental intelligence section. It is responsible for target production and control of the radar sections.

Appendix F

Liaison Functions and Responsibilities

DEFINITION

F-1. Joint Pub 1-02, *DOD Dictionary of Military and Associated Terms* defines liaison as that contact or intercommunication maintained between elements of military forces to ensure mutual understanding and unity of purpose and action.

DOCTRINAL REQUIREMENTS

F-2. FM 100-5 requires US Army units participating in combined operations to establish liaison early with forces of each nation and the next higher headquarters. The intent is to foster better understanding of missions and tactics, facilitate the transfer of information, and enhance mutual trust, cooperation, and confidence. Liaison personnel must know and understand staff and operational organizations, doctrine, and procedures of the force with which they work.

F-3. FM 100-15 further notes that, as a minimum, liaison teams have reasonable life support capabilities, communications equipment, and transportation. In addition, they must have constant access to essential information and stay aware of changes in the supported commander's intent or concept of operations.

F-4. FM 101-5 provides liaison duties and responsibilities for the sending unit, receiving unit and LNO for specific operations and provides a liaison checklist and outline of a liaison officer's handbook.

FIELD ARTILLERY LIAISON TEAM ORGANIZATION

F-5. The L-series objective TOE authorizes six liaison teams for corps arty HQ, two for FA brigade HQ, and one for heavy div arty HQ. Airborne, air assault, and light infantry div arty TOEs do not provide any dedicated liaison personnel. MTOEs for specific units may increase or reduce these numbers.

F-6. An objective TOE FA liaison team consists of three personnel: an LNO, FS sergeant, and FS specialist (driver/radiotelephone operator). METT-TC may dictate that fewer people man a team for short periods of time. Regardless, each liaison team must be equipped with a vehicle and the means to communicate between supported and supporting unit CPs. Also, it should be equipped with digital communications and the means to link with the ACUS.

FIRE SUPPORT LIAISON

F-7. FS liaison is part of the FA's FS coordination function and largely depends on whether or not FSEs already exist to support that function.

ESTABLISHING LIAISON THROUGH FIRE SUPPORT ELEMENTS

F-8. The majority of FA liaison requirements in support of maneuver units are met by FSEs. Corps and division FA HQ and DS cannon battalions provide FSEs as part of their normal mission. For example, div artys will not provide liaison to their division HQ since FSEs are already collocated within division CPs and perform liaison functions along with their other duties. However, other FA units may be required to establish liaison with maneuver units. This is the case when FA brigades, with no organic FSEs, are given responsibility as force FA HQ. If the supported maneuver unit already has an FSE, as in case of a divisional maneuver brigade, the FA brigade liaison party will augment the existing FSE. If supported maneuver elements have no FSEs, as in case when US artillery supports an allied force, the supporting FA unit must not only provide liaison, but also a fully capable FSE. This element will have to be assembled out of the supporting unit's organic assets, or may be furnished by the unit's higher HQ.

LIAISON TO UNITS WITHOUT FIRE SUPPORT ELEMENTS

F-9. A more common situation occurs when non-divisional artillery reinforces another FA unit. An example of this is an FA brigade reinforcing a div arty. Under the liaison principle of supporting-to-supported and the seven inherent responsibilities of the standard tactical missions, units with an R or GSR tactical mission must establish liaison with the reinforced unit.

ON-ORDER MISSIONS

F-10. An artillery commander must consider whether or not he has been assigned contingency or o/o missions. An o/o mission that changes the supported maneuver or FA unit may require FA commanders to establish liaison with units to be supported in the future. Although the intent is to facilitate planning and coordination for the supporting and future supported unit, it may present a problem in case of multiple o/o missions. For example, an FA brigade might be tasked to be an ACR's force artillery HQ. It also might have an o/o tactical mission to:

- Reinforce one or more of the corps' div artys.
- Reinforce an allied division.
- Act as force FA HQ for a divisional maneuver brigade with a counterattack mission.
- Provide GS to the corps.

Although the brigade almost certainly will not perform all of these o/o tactical missions, the commander must be prepared to respond to any one of them and require the FA brigade to establish liaison with multiple elements simultaneously.

METHODS FOR ESTABLISHING LIAISON

F-11. As noted above, supporting FA commanders may have insufficient liaison teams to meet all requirements. In such cases, they must prioritize and provide liaison teams for the most critical requirements. To meet requirements beyond organic capabilities, commanders have several options, to include forming

teams “out of hide”. However, since they cannot field more vehicles, radios, or digital communications devices, this option is limited. It should be noted that the requirement to establish liaison does not necessarily require dispatch of a liaison team. Supporting and supported units may choose to collocate CPs. If communications are adequate, and if digital communications are established, commanders may also decide that electronic liaison is enough. If no means are available to establish full-time liaison, then periodic coordination between units may have to suffice.

LIAISON RESPONSIBILITIES

F-12. Artillery CPs that dispatch liaison teams are called sending units. Gaining units are called receiving units.

Note: Critical duties and responsibilities to the success of FA liaison are the tasks related to automation. These tasks will depend on the type (if any) of automation of the sending and gaining units, the software version in use, the ability to communicate digitally, and the procedures established in the unit automated sop and procedures unique to the automated software in use.

SENDING UNIT RESPONSIBILITIES

F-13. Sending unit responsibilities are as stated in FM 101-5. Additional FA responsibilities are as follow:

- FA LNOs to maneuver units must thoroughly understand FA TTP to support the combined arms team effectively and to instill the necessary trust and confidence in the combined arms commander.
- Have reliable transportation, communications, automation, and COMSEC equipment with appropriate codes. The sending unit must plan to replace equipment and COMSEC material, if necessary.
- FA LNOs must be included as an authorized subscriber in the subscriber table of the IFSAS/AFATDS of the sending unit and must be prepared to provide the IFSAS/AFATDS tab to the FASP.

RECEIVING UNIT RESPONSIBILITIES

F-14. See note in paragraph F-12 above.

CLEARANCE OF FIRES

F-15. Although FSEs have primary responsibility to coordinate clearance of fires and preclude indirect fire fratricides, LNOs can assist FSOs in this role. They can coordinate parent unit requests to fire into the supported unit’s zone or coordinate fires into the parent unit’s sector.

Appendix G

Field Artillery Support Plan

The FA support plan is an appendix to the FS annex for a force OPLAN/OPORD. It provides for the coordinated actions necessary to carry out FA missions and tasks established by the FS plan and FA commander in support of force operations.

FIELD ARTILLERY SUPPORT PLAN FORMAT

G-1. The FA support plan is the force artillery commander's tactical plan for employing the fires of all available artillery. It is based on guidance and instructions included in the FS plan of the OPLAN/OPORD supplemented by verbal information from the force FSC/FSE. The FA support plan ensures the most efficient use of available FA to support friendly forces. It disseminates the FA commander's guidance on the designation of specific units to attack HPTs and the manner in which targets will be engaged. When completed, an FA support plan normally contains a written portion, a target list, and the schedule of fires. Because of the fluidity of the battle, the written elements are needed in advance by subordinate units to ensure timely parallel planning and synchronized execution. The FA operations officer (G3/S3) consolidates input from other staff elements and prepares the plan.

G-2. The FA support plan follows the format of the five-paragraph OPORD and makes reference to both the basic maneuver OPLAN/OPORD and the FS annex. However, not all of the commanders and staffs of the FA units subordinate to the corps arty, div arty, or FA brigade will receive copies of the basic maneuver OPLAN/OPORD or the FS annex. Therefore, the FA support plan may need to repeat critical items of information from these documents to ensure that all commanders and staffs receive essential information. The FA support plan should not include information already available in unit TSOPs. The purpose of the FA support plan is to inform subordinate and supporting units of tasks and requirements that are peculiar to a particular operation.

STANDARDS IN FA SUPPORT PLAN DEVELOPMENT

G-3. The following are some of the measures units should adhere to during the preparation of FA support plans:

- The command group involves itself effectively in establishing FA-focused CCIR and actively monitors information collection and IPB processes.
- All units deliver timely and accurate reports to higher, adjacent, and subordinate elements to include routine status information.
- Information critical to the planning and execution process is not held pending publication of a formal written order.
- If planning processes must be accelerated, essential steps are not

disregarded. For example, if compression is unavoidable, wargaming should still occur during the COA development phase to visualize how the battle will unfold and to refine CCIR. To preclude the dissemination of immature plans requiring continuous change, wargaming is not deferred until the rehearsal phase.

- CSS elements are effectively tied into the staff planning process.
- Staff integration is consistently practiced to ensure individual staff sections do not function in isolation and develop products without first sharing or harmonizing information with other staff elements.
- Rehearsals include all key personnel and give all CP elements an adequate voice.
- Units guard against turning rehearsals into wargaming sessions that produce significant, last-minute changes to original plans.
- TOC operations not only focus on plans/orders preparation processes but place equal emphasis on actions required to support battle preparation and execution and support to the current battle. A judicious balance will preclude units from exhausting themselves during the planning phase and losing the ability to adequately monitor combat preparations, control execution, and prepare for the next event.
- Commanders do not develop plans without adequate staff involvement and integrating all available, essential information.
- Staffs proactively pursue information requirements, rapidly analyze available information, and issue modified instructions, if applicable.
- The overriding criteria for the FA support plan is that it is clear, concise, and understandable. Common graphics provide an effective way to publish often voluminous information, permit maximum flexibility, and promote rapid comprehension.
- A brief plan that clearly defines the mission and required actions takes less effort to prepare and execute. It is better to provide a good plan quickly and to refine it later than to delay preparation until the best plan is completed.

FIELD ARTILLERY SUPPORT PLAN OUTLINE

G-4. The following pages provide a sample outline of an FA support plan. The sample plan is annotated for specific information requirements or suggestions.

(Classification)

Copy no ___ of ___ copies
Unit preparing order
Date-time group (DTG) of order

APPENDIX __ (FA SUPPORT PLAN) TO ANNEX __ (FIRE SUPPORT) TO OPORD __

Reference: List any maps, charts, or other documents (SOPs, and so on) required to understand the order. Reference to a map will include the map series number (and country or geographic area, if required), sheet number (and name if required), edition, scale (if required), and the force common datum (see note below) from a GPS (specify type of GPS and datum used) or from the center of the lower margin on a map. References listed here should not be reprinted in tabs unless tabs are separated from the basic document.

Note: Universal transverse mercator (UTM) coordinates from the same point computed on a different datum may differ as much as 900 meters.

Time Zone Used Throughout Order: The time zone applicable to the operation. Times in other zones are converted to this zone for this operation. Consistency must be maintained through all documents.

TASK ORGANIZATION: May be included as a tab.

1. SITUATION. This paragraph is used exclusively to provide information. Paragraph 1 includes items of information affecting FA operations that may or may not be included in the fires paragraph of the maneuver OPORD or the FS annex. It gives an overview of the general situation so subordinate commanders can understand the environment in which they will be operating. If all organic, attached, or supporting commanders do not receive complete copies of the maneuver OPORD and the FS annex, then the FA support plan repeats those items critical to the execution of their missions.

a. Enemy Forces. Subparagraph 1a provides enemy information vital to the FA unit. This includes enemy indirect fire capabilities that may influence FA operations, the ground threat, the air threat, and any other enemy information of particular relevance to FA units. Reference may be made to an intelligence annex, an overlay, a periodic intelligence report, or to an intelligence summary (INTSUM). Consider using the intelligence annex as a tab.

(Classification)

(Classification)

APP __ (FA SPT) TO ANX __ (FIRE SPT) TO OPORD __

b. Friendly Forces. Subparagraph 1b contains the missions of higher HQ and/or that of supported maneuver elements. Missions of adjacent, supporting, and reinforcing units also may be outlined here. Information should be limited to that which subordinate commanders need to know to accomplish their missions. The supported maneuver commander's intent for FS and the force FA commander's intent during GS and GSR missions are also included in this subparagraph.

c. Attachments and Detachments. Subparagraph 1c should list units attached to and detached from the FA unit (if not included clearly in the task organization), the terms of attachment, and effective DTGs, if appropriate.

d. Assumptions. If the FA support plan supports an OPLAN, assumptions may be required. If the FA support plan is part of an OPORD, assumptions are not included.

2. MISSION. Paragraph 2 is a clear, concise statement of the task the FA unit is to accomplish. As a minimum, it should answer the questions: who, what, when, where, and why. It includes essential tasks determined by the commander as a result of his mission analysis.

3. EXECUTION. The (corps arty, div arty, or FA brigade) commander's intent is included here. Intent is the commander's stated vision that defines the purpose of an operation; the end state will be achieved by the force as a whole.

a. Concept of Operations. Subparagraph 3a is a statement of the FA commander's visualization of the conduct of the operation by phase to the desired end state. The concept clarifies the purpose of the operation and is stated in enough detail to ensure appropriate action by subordinate units in the absence of more specific instructions. This paragraph should include the list of EFATs by phase. In addition, this paragraph may include a summary of the maneuver concept by phase for units that do not receive the maneuver OPORD.

b. Organization for Combat. Subparagraph 3b is a clear statement of the organization and tactical missions of the subordinate units of the FA HQ. Organization for combat normally will be done by phases. Anticipated o/o changes to organization or tactical missions are included in this paragraph.

Note: Subsequent subparagraphs in paragraph 3 build on the concept of operations and should provide the artillery organization for combat, priority of fires, priority of special munitions, positioning and movement instructions, and specific tasks to be accomplished by subordinate units.

c.* * * * * * * * * * * *

d.* * * * * * * * * * * *

(Classification)

(Classification)

APP __ (FA SPT) TO ANX __ (FIRE SPT) TO OPORD __

e.* * * * * * * * * * * *

f.* * * * * * * * * * * *

g. Coordinating Instructions. The last subparagraph in paragraph 3 is coordinating instructions. It includes instructions and details of coordination applicable to two or more subordinate FA units. Instructions included in this subparagraph also may be addressed in tabs to the FA support plan. Tabs should be prepared for portions of the FA support plan that are better explained in a different format (for example, overlay or matrix), that are too extensive to be in the FA support plan, that are expected to change or lengthen, or that are submitted too late to be included. If a separate tab is issued, include in the coordinating instructions subparagraph only items of general interest with details placed in the tab. If a tab is prepared, reference it in the body of the FA support plan. This subparagraph should include instructions concerning the following:

- Met (includes source, type, and times of met messages).
- Liaison requirements.
- Fire plan (includes target list, schedules of fires).
- FSCMs. (These may be distributed as part of the operations overlay. Planned measures should be identified.)
- Automated fire control instructions, especially coordination requirements with nonautomated units or units with similar, but not identical, automated systems. Mutual support unit (MSU) taskings are identified here.
- HPTL.
- Attack guidance. (This may appear as a matrix in a tab. Specific automated commander's criteria is found in the AFATDS or IFSAS tab).
- NBC defense (includes mission-oriented protective posture [MOPP], operational exposure guidance, and decontamination instructions).
- PIR and/or information requirements.
- TA (includes counterfire reference grid and instructions to or about specific observers).

(Classification)

(Classification)

APP __ (FA SPT) TO ANX __ (FIRE SPT) TO OPORD __

- Survey (includes priorities for survey, accuracies required [if other than SOP], timing, position requirements and future plans).
- Intelligence acquisition tasks.
- Ammunition restrictions (includes expenditure restrictions, approval requirements, and risk limitations).
- Antifratricide measures (such as vehicle markings) that are not SOP.

4. SERVICE SUPPORT. Paragraph 4 includes specific service support instructions and arrangements supporting the operation. The commander's guidance regarding CSS will be here. Supply, maintenance, medical, and personnel information are included in this paragraph. As a minimum, the CSR and the CSS locations (combat trains, field trains, casualty collection points, LRP, ATP, and/or ASP) should be given. CSS support usually will be included as a tab.

5. COMMAND AND SIGNAL.

a. Command. The first subparagraph should list the locations of the unit CP and the locations of higher, supporting, and supported unit CPs. The commander's planned location during the operation can be in this paragraph. Designation of an alternate CP is included here. Automated C2 systems used (such as maneuver control system [MCS]) and any particular aspects for their use also are included here.

b. Signal. The second subparagraph contains the index of the effective SOI to include edition in effect and courier schedule. Instructions on the use of radio and instructions for wire and retransmission elements are included here.

Acknowledge.

ISSUING COMMANDER'S NAME
RANK

OFFICIAL:

/ss/

NAME
G3 (or S3)

(Classification)

(Classification)

APP __ (FA SPT) TO ANX __ (FIRE SPT) TO OPORD __

Tabs: A -

B -

C -

Tabs: Tabs are ordered as they are referenced in the basic OPORD or OPLAN. The TSOP may specify that some tabs will always be produced. Common tabs include the following:

- Task organization (may be attached from OPORD).
- Intelligence (INTSUM, overlay, annex, or PIR and information requirements lists prepared by G2).
- FA support execution matrix and/or FA positioning and movements matrix (may not apply).
- Maneuver overlays.
- Force movement plans and/or schedules.
- FA positioning and movement overlay.
- Target lists. (See FM 6-20-1, Appendix E.)
- Fire plan (schedules of fires).
- Survey (the survey plan prepared by the RSO).
- TA (prepared by the HQ with counterfire responsibility). (See FM 6-121, Appendix F.)
- AFATDS or IFSAS.
- Met (the meteorology plan).
- Obstacle overlay (prepared by engineers).
- Army airspace command and control (A2C2) overlay (prepared by A2C2 element).

(Classification)

(Classification)

APP __ (FA SPT) TO ANX __ (FIRE SPT) TO OPORD __

- CSS overlay. (If service support is a tab, the CSS overlay will be an enclosure to the service support tab.)
- ROE.
- Brevity codes.
- Civil affairs.
- PSYOP.
- Special distribution items (such as antifratricide prevention information).

Often subordinate units will not receive the basic maneuver OPORD or FS annex. Therefore, reprints of portions of these documents may be required and included as tabs.

Distribution: The G3 or S3 establishes distribution in coordination with other coordinating and special staff officers. A distribution formula may be included in the unit TSOP.

(Classification)

SURVEY TAB TO THE FIELD ARTILLERY SUPPORT PLAN

G-5. The survey plan (or order) normally is incorporated into the FA plan as the survey tab. The survey plan contains detailed instructions (orders on issuance of the OPORD) to each survey team not covered by local TSOP. It gives general information needed for the efficient accomplishment of the survey mission. The survey plan is written or issued orally. It generally follows the same sequence as the OPORD. Often because of the tactical situation and wide dispersal of units, part of the survey plan may be issued by radio or other communication means available to the survey elements. The format for a five-paragraph survey plan is shown below. The sample addresses several topics which should be considered when including a survey tab for the FA support plan.

(Classification)

TAB _ (SURVEY) TO APPENDIX _ (FA SUPPORT PLAN) TO ANNEX _ (FIRE SUPPORT) TO OPORD ___.

Reference: The same reference information contained in the basic FA support plan should be included here. Also, any survey-specific references should be included.

Time Zone Used Throughout Order: The time zone should be the same as in the basic FA support plan.

1. SITUATION. Only items having a bearing on the execution of the survey mission are addressed in this paragraph.

a. Enemy Forces. This subparagraph contains information from the G2/S2 on enemy forces that may affect the survey mission.

b. Friendly Forces. This subparagraph contains information on higher, adjacent, and supporting units that may affect the survey mission.

c. Attachments and Detachments. This subparagraph lists sections attached or detached for a particular mission such as an infantry squad for security.

2. MISSION. This paragraph is a clear, concise statement of the task the survey elements must accomplish. Normally, it describes **who, what, when, where,** and, as appropriate, **why**. This paragraph has no subparagraphs.

3. EXECUTION.

a. Concept of Operations. This subparagraph briefly describes the survey methods to be used. It answers the question, generally, of how the survey will be done. This paragraph should consider target area survey, SIMOs, COLTs, radar, aerial assets, and MI assets.

(Classification)

(Classification)

TAB _ (SURVEY) TO APPENDIX _ (FA SUPPORT PLAN) TO ANNEX _ (FIRE SUPPORT) TO OPORD ___.

b. Priority of Survey. This subparagraph will describe the commander's priority of survey for the best use of critical assets.

Note: The intermediate subparagraphs (paragraphs 3c, d, e, and so forth) are specific missions of subordinate survey sections or teams. The mission of each subordinate team is addressed in its own paragraph, which contains instructions for that team only. Each mission tells the subordinate leader what he must do, but not how he must do it (unless rigid centralized control must be maintained).

c. Coordinating Instructions. The last subparagraph contains instructions common to two or more units. These instructions are designed to keep the subordinate units working together. Instructions such as a primary method of determining azimuths, distances appropriate as coordinating instructions, special markings not covered in the TSOP, and special user techniques for GPS. Included in the coordinating instructions is where the survey elements will receive life support and security support.

4. SERVICE SUPPORT. This paragraph lists those logistic considerations that concern the surveyors. It lists food, ammunition, POL, locations of medics and aid stations, handling of EPWs, and nonorganic transportation. These considerations are addressed as they affect the particular survey. Local TSOP items need not be addressed.

5. COMMAND AND SIGNAL.

a. Command. This subparagraph gives the locations of the CP, SPCE, survey officer, chief surveyor, and team chiefs. The survey distribution concept considerations include dissemination time and automated means (AFATDS, and so on) available for dissemination. This subparagraph will contain frequencies and transmission times if SIMO stations will be used.

b. Signal. The subparagraph lists nonstandard hand signals, pyrotechnics, frequencies, call signs, electronic countermeasures, and GPS COMSEC considerations.

Enclosures: Suggested enclosures to the survey tab include the following:

- GPS visibility windows.
- Survey control points. This includes survey control points already installed and proposed locations to support the plan.

(Classification)

AFATDS (OR IFSAS) TAB TO THE FIELD ARTILLERY SUPPORT PLAN

G-6. Since AFATDS/IFSAS provide fire planners throughout the artillery system with instantaneous access to target files and FA schedules, the G3 or S3 writing the FA support plan no longer has to attach a target list and schedules of fires to the written portion of the plan. Instead, he can initiate, coordinate, and monitor the development of the FA schedules in accordance with the standard fire planning capabilities and procedures that apply to AFATDS/IFSAS. In the written portion of the plan, he can reference FA schedules by plan name and, if necessary, targets by target number.

G-7. The following format depicts an AFATDS/IFSAS tab to an FA support plan designed for use with a plan. It presents the initialization requirements, commander's criteria, FSCMs, and other data important to AFATDS and IFSAS C2 procedures. (The AFATDS mnemonics that appear in the example tab are identified in Table G-1 below.)

Table G-1. AFATDS Mnemonics

Mnemonic	Interpretation	Mnemonic	Interpretation
ADJC	adjacent	ILA	illumination projectile
AFU	ammunition and fire unit	MAPMOD	map modification
AMOL	critical ammunition level	MOD	modification
APL	applicable ammunition	NNFP	nonnuclear fire plan
ASRLVL	available supply rate level	PDA	point-detonating fuze (M557, M739, M572)
AWS	air weather service	PSHELL	priority shell
BDRY	boundary level	PTYPE	priority type
BGEOM	battlefield geometry	PZONE	priority zone
COMD	command	SMA	smoke, white phosphorus
ECOF	effects cutoff factor	SMB	smoke, base ejection and colored
EFF	desired effects	SPHERE	spheroid
FCORD	coordinating agency	SPRT	support
FIST	fire support team	SR	situation report
FM	fire mission	TIA	time fuze (M564)
FUSEL	commander's fire unit selection	TIB	time fuze (M577)
GZ	grid zone	TIC	time fuze (M548)
HEA	high-explosive projectile (deep cavity)	VOL	volley
HEC	APICM projectile (M444)	VTE	variable time fuze (M728)
HER	rocket-assisted projectile (motor on)	XCLUDE	exclude

(Classification)

TAB __ (AFATDS or IFSAS) TO APPENDIX __ (FA SUPPORT PLAN) TO ANNEX __ (FIRE SUPPORT) TO OPORD___

Reference: The same reference information contained in the basic FA support plan should be included here. Also, any automation-specific references should be included.

Time Zone Used Throughout Order: The time zone should be the same as in the basic FA support plan.

1. SUBSCRIBER TABLE ASSIGNMENTS. Subscriber table (SBT) assignments may be listed here or as an enclosure.

- FSO:_ _ _;FIS:_ _ _;_ _ _; FSO:_ _ _ ;FIS:_ _ _;_ _ _
- FSO:_ _ _;FIS:_ _ _;_ _ _ FSO:_ _ _;FIS:_ _ _ ;_ _ _

2. MSU AFFILIATIONS OR RELATIONSHIPS. The MSU affiliations or relationships must be fully delineated to allow for continuous automated operations.

3. COMMANDER'S CRITERIA.

a. Commander's Modifications. The formats and fields below are used to specify ammo types and levels to be ignored, specify ECOF for volume office calculations, specify zone of responsibility, specify minimum MLRS target radius, and provide for priority fire missions.

(1) FM;MOD;

- PZONE:_ _ _ _ _ _;
- PTYPE:_ _ _ _ _ _/_ _ _ _ _ _ _;
- PSHELL:_ _ _;

(2) NNFP;MOD;. . .ECOF:_ _;

b. Exclusions. The formats below are used to specify weapons or fire units or a combination of shell and/or fuze by weapon type or fire unit.

(1) FM;XCLUDE;

(2) NNFP;XCLUDE;

c. Attack Methods. The fields below are used to override standard volleys factor for specified target types or subtypes.

Classification

Classification

TAB ___ (AFATDS OR IFSAS]) TO APP ___ (FA SPT) TO ANX (FIRE SPT) TO OPORD ___

FM;ATTACK;...EFF:_ _;VOL:_ _

d. Fire Unit Selection. The FM;FUSEL format is used to specify basic ordering of selected fire units and so on.

e. Map Modification. The fields are used to define the spheroid, grid zone, and coordinates that describe the general AO.

SPRT;MAPMOD;...GZ:_ _;SPHERE:_ _;

f. Artillery SITREP. The formats below indicate where and when SITREPs should be sent and when SITREPs are changed.

(1) AFU;COMD;

(2) AFU;SR;

g. Available Supply Rate. The fields below are used to establish CSR.

AFU;ASR;...ASRLVL:_ _ _ _;

h. Critical Ammunition Level. The AFU;AMOL format specifies critical ammo levels. In the AFU;AMOL format, discuss any restrictions by the commander. The following are types of projectiles:

- HEA/_ _ _ , SMB/_ _ _, PDA/_ _ _, TIC/_ _ _,
- HEC/_ _ _, ILA/_ _ _, TIA/_ _ _, VTE/_ _ _,
- SMA/_ _ _, HER/_ _ _ TIB/_ _ _,

i. Geometry.

(1) Zones.

(a) Brigade zone. Data to establish supported division, brigade, and/or battalion zones are provided for entry into AFATDS (or IFSAS) by using the SPRT;ZNE format. List grids in the order they are entered into the computer.

Classification

_____
Classification

TAB ___ (AFATDS or IFSAS) TO APP ___ (FA SPT) TO ANX ___ (FIRE SPT) TO OPORD ___

Brigade zone: (name)	Brigade zone: (name)	Brigade zone: (name)
1. Grid	1. Grid	1. Grid
2. Grid	2. Grid	2. Grid
3. Grid	3. Grid	3. Grid
4. Grid	4. Grid	4. Grid
5. (and so forth)	5. (and so forth)	5. (and so forth)
BDRY: (name)	BDRY: (name)	BDRY: (name)
ADJC: (name)	ADJC: (name)	ADJC: (name)

(b) Battalion zones.

Battalion zone: (name)	Battalion zone: (name)	Battalion zone: (name)
1. Grid	1. Grid	1. Grid
2. Grid	2. Grid	2. Grid
3. Grid	3. Grid	3. Grid
4. Grid	4. Grid	4. Grid
5. Grid	5. Grid	5. Grid
6. (and so forth)	6. (and so forth)	6. (and so forth)
BDRY: (name)	BDRY: (name)	BDRY: (name)
ADJC: (name)	ADJC: (name)	ADJC: (name)

(2) Maneuver Coordinating Measures. Use battlefield geometry input message (SPRT;BGEOM) and RFL as geometry type.

PL _ _ _ _	PL _ _ _ _	PL _ _ _ _	PL _ _ _ _	PL _ _ _ _
1. Grid	1. Grid	1. Grid	1. Grid	1. Grid
2. Grid	2. Grid	2. Grid	2. Grid	2. Grid
3. Grid	3. Grid	3. Grid	3. Grid	3. Grid
	4. Grid		4. Grid	

(3) Fire Coordination Areas. Use the battlefield geometry input message (SPRT;BGEOM) to establish fire coordination areas.

(a) No-Fire Areas

NAME: _ _ _ _ _	NAME: _ _ _ _ _
APL: _ _ _ _ _ _	APL: _ _ _ _ _ _
FCORD: _ _ _ _ _	FCORD: _ _ _ _ _

_____
Classification

_____
Classification

TAB ___ (AFATDS or IFSAS]) TO APP ___ (FA SPT) TO ANX ___ (FIRE SPT) TO OPORD ___

(b) Restrictive Fire Areas.
NAME: _ _ _ _ _
APL: _ _ _ _ _
FCORD: _ _ _ _
1. Grid
2. Grid
3. Grid
4. Grid
5. Grid

(c) Free-Fire Areas (for registration only).
NAME: _ _ _ _ _
APL: _ _ _ _ _
FCORD: _ _ _ _
Grids and/or RAD number (meters)

(4) Target Number Assignments. Target numbers not covered in the TSOP should be discussed here. Also, attached or supporting artillery may have target numbers assigned in this subparagraph.

Enclosures: Suggested enclosures to the AFATDS or IFSAS tab include the following:

- Message of interest (MOI) tables.
- Subscriber tables.
- Computer chips.

_____
Classification

TARGET ACQUISITION TAB TO THE FIELD ARTILLERY SUPPORT PLAN

G-8. The TA tab is an integral part of the FA support plan. The TA tab is a managerial tool used mainly by the div arty (or FA brigade) controlling FA TA assets. DS battalion staffs produce a TA tab when they control FA TA assets. This tab is used to ensure that all TA assets are employed to support the overall maneuver operation. The purpose of the TA tab is as follows:

- Assigns missions to FA TA assets.
- Coordinates the FA TA effort for the force.
- Establishes a specific flow of target processing data.
- Assigns responsibilities not covered in unit TSOPs.

G-9. Although no specific format for the tab is prescribed, the five-paragraph OPORD format normally is used, especially when the TA tab is issued separately from the FA support plan. In the div arty HQ, the div arty S2 is responsible for the preparation of the TA tab. The div arty counterfire officer, the TAB commander, and the assistant counterfire officer (the TAB executive officer) assist him. In the FA brigade, the TA tab also is developed by the S2. In separate maneuver brigades, the TA tab is produced jointly by the FA battalion S2 and S3 with help from the TA platoon leader.

G-10. The following format explains in general the preparation of the TA tab and its enclosures - the RDOs. (For specific information, see FM 6-121.)

(Classification)

TAB __ (TARGET ACQUISITION) TO APPENDIX __ (FA SUPPORT PLAN) TO ANNEX __ (FIRE SUPPORT) TO OPORD ___

Reference: The same reference information contained in the basic FA support plan should be included here. Also, any TA-specific references should be included.

Time Zone Used Throughout Order: The time zone should be the same as in the basic FA support plan.

1. SITUATION. This paragraph should include the friendly situation, supported units, and other TA assets in sector. Include specific enemy and friendly assessments that form a basis for the threat assessment required on the RDO.

2. MISSION. This paragraph should be a clear, concise statement of the TA mission.

3. EXECUTION.

a. Concept of Operations. This subparagraph gives the commander's concept for TA. This should include identification of designated cueing agents and general cueing guidance. Specific cueing guidance is listed below in the coordinating instructions subparagraph.

b. Processing. This subparagraph is used to denote target processing flow. This targeting information flow describes the relationship between the acquisition source and its controlling HQ. This paragraph does not represent the actual communications nets used, but shows the destination flow of targeting information. This paragraph should list all FA TA assets and HQ controlling them. The following are examples of the types and information that may be included in the processing subparagraph.

- AN/TPQ-36 section reports targets to the controlling supporting FDC.
- Firefinder radar sections report targets to the div arty (or FA brigade) CP.
- AFSOs report targets to the controlling HQ CP.
- DS battalions report targeting data to the div arty CP.
- Div arty CP will exchange targeting information with the supporting FA brigade CP (especially when it acts as the alternate div arty CP).

(Classification)

Classification

TAB ___ (TA) TO APP ___ (FA SPT) TO ANX ___ (FIRE SPT) TO OPORD ___

c. Visual Observation. At each level of command, assets from the FA and the aviation brigade combine to form the observation aircraft system. When the observation aircraft system is allocated as an FS asset, this subparagraph addresses the missions and C2 relationships assigned to AFSOs. Types of C2 relationships assigned to AFSOs normally are OPCON, DS, or GS. The overall mission of the observation aircraft when it is allocated as an FS asset is normally recommended by the FSE to execute closely the commander's intent. However, mission briefings to and actual flight control of the observation aircraft crew are often accomplished better by the force artillery CP because of the availability of technical information by the flight crew.

d. Missions. This subparagraph includes the missions and C2 relationships assigned to the FA radars. FA radars may be attached to FA battalions or higher FA HQ. They help perform the mission of the FA unit. Although not given the standard mission assigned to FA units, an attached radar assumes the mission of the supported unit, for example, DS or GS.

EXAMPLE MISSION FOR AN/TPQ-36 SECTION:

AN/TPQ-36 Section 3, Battery A, 25 FA;
Mission: GS div arty; attached to 1-51 FA for logistics and security.

e. Coordinating Instructions. This subparagraph covers information that is not addressed in the unit TSOP. At a minimum, this paragraph should consider the following:

- Cueing guidance.
- Guidance for coverage during radar section displacements.
- Common sensor boundary. Firefinder radars sharing or having overlapping search sectors need to be identified. Consideration must then be given to the establishment of a common sensor boundary. The common sensor boundary is indicated by a series of grid coordinates to define its location.
- Coordination for communications nets and relay, if required.
- Additional coordination for survey and security, if required.

4. SERVICE SUPPORT. This paragraph lists additional service support requirements as required for TA assets. This paragraph may refer to the FS annex.

Classification

Classification

TAB ___ (TA) TO APP ___ (FA SPT) TO ANX ___ (FIRE SPT) TO OPORD ___

5. COMMAND AND SIGNAL. This paragraph contains required command and signal information as it pertains to TA assets in support of the operation. This paragraph may refer to the FS annex.

Enclosures: Suggested enclosures to the TA tab include the following:

- Consolidated capabilities overlay. It normally contains the following:
  - Major unit boundaries, FEBA, and FLOT.
  - Primary and alternate search sectors, zones with type and number, and radar type to include section description. TSOPs should specify color-coding for individual radar section data.
  - Common sensor boundary, drawn as a solid line labeled as a common sensor boundary and with the effective DTG.
  - Major unit locations, especially those covered by the CFZ.
  - Overlay title, classification, and register marks.
- RDOs for the AN/TPQ-36s. A separate RDO is written for each section. (A sample RDO is included after this discussion of the TA tab. Instructions for completing an RDO are found in FM 6-121.)
- RDOs for the AN/TPQ-37s. A separate RDO is written for each section.
- Employment of unmanned aerial vehicle (UAV), if attached or available.
- ATIZ.
- CCFZ.
- CFZ.

Classification

(CLASSIFICATION WHEN FILLED IN)

RADAR DEPLOYMENT ORDER For use of this form, see FM 6-121. The proponent agency is TRADOC.			
SECTION	-25A -36	-58B -37	MISSION
LOCATION	Primary		Alternate

SEARCH SECTOR				
	Left Edge	**Right Edge**	**Minimum Range**	**Maximum Range**
Primary Azimuth	**mils**	**mils**	**meters**	**meters**
Alternate Azimuth	**mils**	**mils**	**meters**	**meters**

EW THREAT ASSESSMENT		
EW THREAT Yes or No	**Affecting Friendly Assets Yes or No**	**Types of Threat (Air or Ground)**

NOTE: Use the Firefinder survivability flowchart in FM 6-121 to determine emission limits.

CUEING AGENTS (CALL SIGN AND DESIGNATION) IN PRIORITY		

REPORTING CHANNELS	

ZONE DATA							
Type and Number	Description and/or Command Priority	Grid Coordinates of Zone Corner Points					

DA FORM 5957-R, SEP 1990

(CLASSIFICATION WHEN FILLED IN)

METEOROLOGY TAB TO THE FIELD ARTILLERY SUPPORT PLAN

G-11. The met plan contains the information needed to understand how met assets will be used during a specific operation. The artillery G3/S3 controlling the met section is responsible for the preparation of the met plan. At the div arty and FA brigade, the met section leader helps the S3 with input from the S2. At corps arty the corps ballistic met NCO prepares the met plan.

G-12. The met plan is published as a tab to the FA support plan. The met plan (tab) will conform to the standard five-paragraph OPORD format. (For specific information see FM 6-15.)

(Classification)

TAB__ (MET PLAN) TO APPENDIX__ (FA SUPPORT PLAN) TO ANNEX__ (FIRE SUPPORT) TO OPORD__

Reference: The same reference information contained in the basic FA support plan should be included here. Also, any met-specific references should be included.

Time-Zone Used Throughout Order: The time zone should be the same as in the basic FA support plan.

1. SITUATION. This paragraph should include the friendly situation, supported units, and other met assets in sector.

2. MISSION. This paragraph should be a clear, concise statement of the met mission.

3. EXECUTION.

a. Concept of Operations. This subparagraph gives the commander's concept for employment of all met assets. This includes the overall section positioning scheme, types of messages to be produced, and specific requirements for firing units and other nonartillery users of met data.

b. Scheduling. This subparagraph provides information required for scheduling flights and operating met assets. A detailed schedule will be listed for each section and will include the following:

- Release times.
- Delivery times.
- Type of messages required.
- Unit(s) supported.
- Communication means.

c. Coordination. This subparagraph covers information that is not addressed in unit TSOP procedures. As a minimum, this paragraph should contain the following:

- Coordination requirements for air weather service and NBC support.
- Radiosonde frequencies.

(Classification)

(Classification)

TAB ___ (MET) TO APP ___ (FA SPT PLAN) TO ANX ___ (FIRE SPT) TO OPORD ___.

- Mode of operations (radio direction finder or navigational aid).
- Remote launch procedure.

4. SERVICE SUPPORT. This paragraph contains the logistics and maintenance requirements of the section. Items that must be considered for inclusion are as follows:

- Daily expenditure rates of radiosondes, helium and hydrogen, and balloons for each section.
- Organizational maintenance priorities.
- Direct support maintenance procedures and locations.
- Cross-leveling procedures.

5. COMMAND AND SIGNAL. This paragraph describes the C2 relationships, locations of controlling HQ, communications priorities, and dissemination methods.

(Classification)

ARTILLERY INTELLIGENCE TAB TO THE FIELD ARTILLERY SUPPORT PLAN

G-13. The artillery intelligence tab is not a copy or repeat of the maneuver intelligence annex but contains intelligence data that is artillery-specific. This tab includes artillery PIR and information requirements as designated by the artillery commander.

G-14. The artillery G2 or S2 prepares the artillery intelligence tab.

(Classification)

TAB __ (INTELLIGENCE) TO APPENDIX __ (FA SUPPORT PLAN) TO ANNEX __ (FIRE SUPPORT) TO OPORD__

Reference: The same reference information contained in the basic FA support plan should be included here. Also, any other relevant references should be included.

Time Zone Used Throughout Order: The time zone should be the same as in the basic FA support plan.

1. SUMMARY OF ENEMY SITUATION. This paragraph contains information about enemy forces essential to implementing the artillery mission. When the amount of detail to be included makes it appropriate, a brief summary and reference to the appropriate intelligence document (appendix or annex) may be used. However, reference to other documents should not be made when those documents are not available to all recipients of the appendix.

2. PRIORITY INTELLIGENCE REQUIREMENTS. This paragraph lists the PIR in separate subparagraphs. In a final subparagraph, list other intelligence requirements that may not be artillery-specific.

3. INTELLIGENCE ACQUISITION TASKS.

a. Orders to Subordinate and Attached Units. This subparagraph should list all intelligence acquisition tasks for subordinate and attached units. If appropriate, these requirements may have to be listed by phases. List by unit, in a separate, numbered subparagraph, detailed instructions for reports required by the issuing HQ.

b. Requests to Higher, Adjacent, and Cooperating Units. This subparagraph should list in a separate numbered subparagraph requests for information to units not organic or attached.

4. MEASURES FOR HANDLING PERSONNEL, DOCUMENTS, AND MATERIEL. This paragraph contains instructions about the operation that are not contained in the TSOP or that modify or amplify the TSOP for the current operation. Each of these measures should be coordinated with admin-log personnel and cross-walked with the admin-log tab. Considerations for this paragraph include the following:

- Handling of EPWs, deserters, repatriates, local inhabitants, and other persons. Special handling and segregation instructions, as appropriate. Location of EPW collection points as provided by the provost marshal.

- Handling of captured documents. Instructions for handling and processing of captured documents from time of capture to turnover to intelligence personnel.

(Classification)

(Classification)

TAB ___ (INTEL) TO APP ___ (FA SPT) TO ANX ___ (FIRE SPT) TO OPORD) ___

5. DOCUMENTS AND/OR EQUIPMENT REQUIRED. This paragraph lists, in each category, the conditions under which certain documents or equipment required by or allocated to units can be obtained or requested. Items may include standard maps, special maps, aerial photographs, and terrain analysis products. This paragraph also may include the digital products such as digital terrain elevation data, interim terrain data, Firefinder data, and digital feature analysis.

6. COUNTERINTELLIGENCE. This paragraph is covered largely by the TSOP. Any procedures not covered or different from the TSOP should be listed in this paragraph. Special considerations applying to counterintelligence implications of specific operations are listed in this paragraph.

7. REPORTS AND DISTRIBUTION. Reports and distribution instructions for this paragraph may be as described by the TSOP. This paragraph or the TSOP stipulates the conditions (for example, dates, number of copies, distribution) regulating the issue of intelligence reports to the originating command for the duration of the operation. Any or all of the following items may be included in this paragraph:

- Period to be covered by routine reports and distribution.
- Routine and special reports that differ from SOP required reports from subordinate units.
- Periodic or special conferences of intelligence officers.
- Distribution of special intelligence studies such as defense overprints, photo intelligence reports, and OB overlays.
- Special intelligence liaison, when indicated.

8. MISCELLANEOUS INSTRUCTIONS (if required). List here, under subparagraphs, necessary items that are not covered in TSOPs or that require action different from that detailed in TSOPs.

Enclosures: Suggested enclosures to the artillery intelligence tab include the following:

- Enemy force projection.
- Terrain analysis.
- Technical intelligence.
- Overlay.

_____
(Classification)

ADMINISTRATIVE-LOGISTICS TAB TO THE FIELD ARTILLERY SUPPORT PLAN

G-15. The admin-log tab contains specific information relevant to the issuing FA HQ. Information contained in the unit TSOP should not be covered in this tab. Changes to or deviations from admin-log information in the TSOP must be covered in the tab. The admin-log tab is prepared by the G4/S4 with assistance from the G1/S1.

(Classification)

TAB__ (ADMIN-LOG) TO APPENDIX__ (FA SUPPORT) TO ANNEX__ (FIRE SUPPORT) TO OPORD__

Reference: The same reference information contained in the basic FA support plan should be included here. Also, any other relevant references should be included.

Time Zone Used Throughout Order: The time zone should be the same as in the basic FA support plan.

1. GENERAL. This paragraph outlines the general plan for CSS and any orders that are not suitably covered by succeeding paragraphs. Consider the following for inclusion into this paragraph, as appropriate:

- The CSB and CSG support relationship to FA units in the area.
- Concept of logistics and administrative support by phase, if appropriate.

2. MATERIAL AND SERVICES. This paragraph includes information about supply (normal daily requirements), transportation, maintenance, services, and allocation of labor for CSS. If applicable, this paragraph should cover the plan for distributing all classes of supplies (supply point or unit distribution).

a. Supply. This paragraph should contain a subparagraph for each class of supply.

(1) Class I. This paragraph should consider the following:

- Ration cycle.
- The amount of days of supplies to accompany troops.
- Water distribution points.

(2) Class II. This paragraph should consider the following:

- Special requirements for individual clothing, CTA 50-900 items, or mission-essential consumables.

(Classification)

(Classification)

TAB ___ (ADMIN-LOG) TO APP ___ (FA SPT) TO ANX ___ (FA SPT) TO OPORD ___

- Provisions for replacement of damaged protective clothing.

(3) **Class III.** This paragraph should consider the following:

- Package and bulk distribution points.
- Amount of package and bulk Class III to accompany troops.
- Special distribution requirements.
- Push packages.
- Supporting unit locations.
- Type fuel to be used if other than TSOP.
- Guidance on captured Class III.

(4) **Class IV.** This paragraph should discuss the availability of Class IV materials. If there are any CCLs available, this paragraph should discuss their composition and location for pick up.

(5) **Class V.** This paragraph should consider the following:

- ATP locations.
- Availability of CCLs.
- Stockage levels (special requirements).
- Ammunition information not covered in TSOP.
- CSR.
- Chemical munition allocation and location.

(Classification)

(Classification)

TAB ___ (ADMIN-LOG) TO APP ___ (FA SPT) TO ANX ___ (FA SPT) TO OPORD ___

(6) **Class VI.** As required.

(7) **Class VII.** This paragraph should consider the following:

- Class VII management for the operation.
- The method of identifying requirements.
- Priority of replacement.
- Location for matching replacement weapon systems with crews.
- Location of turn-in points (usually collocated with maintenance collection points).

(8) **Class VIII.** This paragraph should consider the following:

- Requisition channels if other than per TSOP.
- Minimum days of supply for units to carry for the operation if different from overall days of supply.

(9) **Class IX.** This paragraph should consider the following:

- Short supply items and their location.
- Critical major assemblies and location.
- Repair parts availability.
- Priority of fill if specific for the operation.
- Commander's guidance for cannibalization, controlled substitution, and BDAR.

(Classification)

(Classification)

TAB ___ (ADMIN-LOG) TO APP ___ (FA SPT) TO ANX ___ (FA SPT) TO OPORD ___

b. Transportation. This paragraph should contain transportation requirements peculiar to the operation. Consider the following for inclusion:

- Number of vehicles that constitute a convoy.
- Specific convoy procedure if different than TSOP.
- Main supply route restrictions.
- Traffic control procedures.

c. Services. This subparagraph contains information that prescribes the type of service available and the designation and location of the unit providing the service. It may make assignments to support units and list schedules when services are available. This subparagraph may assign service missions for service units not covered in other orders (for example, priority of effort for engineers). If further clarification is needed for a service, list it separately as indicated below:

(1) Construction.

(2) Graves registration. This paragraph should consider the following if they are not covered in the TSOP:

- Location of collection points.
- Evacuation procedures.
- Handling of personal effects.
- Procedures for mass burials.
- Procedures for contaminated remains.

(3) Field Services. This paragraph should consider the following:

- Laundry.

(Classification)

(Classification)

TAB ___ (ADMIN-LOG) TO APP ___ (FA SPT) TO ANX ___ (FA SPT) TO OPORD ___

- Bath.
- Clothing renovation and exchange.
- Bakery.
- Decontamination.

(4) **Health Services.** This paragraph should consider the following:

- Medical.
- Dental.
- Veterinary service.
- Whole blood control.
- Preventive medicine.
- Health and sanitation.

(5) **Explosive ordnance disposal.** This paragraph should consider the following:

- Location of explosive ordnance disposal teams.
- Notification procedures if other than by TSOP.
- Marking procedures if other than by TSOP.

(6) **Other items.** Other items of consideration not covered in previous paragraphs are listed here.

_____
(Classification)

_____
(Classification)

TAB ___ (ADMIN-LOG) TO APP ___ (FA SPT) TO ANX ___ (FA SPT) TO OPORD)

3. MEDICAL EVACUATION AND HOSPITALIZATION. This paragraph should contain information and instructions for support units that prescribe the plan for evacuation and hospitalization of sick, wounded, or injured military personnel.

a. Evacuation. This subparagraph should consider the following:

- Routes, means, and schedules of evacuation and responsibilities for evacuation.
- Evacuation and enroute treatment policies.
- Evacuation policies by air and ground.
- Medical evacuation (MEDEVAC) frequencies.
- Evacuation procedures for contaminated patients.
- MEDEVAC request procedures if different from TSOP.
- Medical holding policy, if applicable.

b. Hospitalization. This subparagraph should consider the following:

- Location of appropriate treatment facilities.
- Definitive treatment policies that include treatment of contaminated casualties.

c. Other Medical Services. Other medical services not described above are listed here.

4. PERSONNEL. This paragraph contains all needed information and instructions on personnel matters not included in the TSOP that pertain to the specific operation.

_____
(Classification)

_____
(Classification)

TAB ___ (ADMIN-LOG) TO APP ___ (FA SPT) TO ANX ___ (FA SPT) TO OPORD ___

a. Maintenance of Unit Strength. This subparagraph should consider the following:

- Requirements to keep the commander informed on personnel status (strength reports). (See the appropriate annex of the TSOP for report formats.)
- Casualty feeder submission.
- Priority of replacements, if necessary.
- Listings of critical shortage MOSs.
- Special procedures for pushing replacements to particular units (for example, covering force by phases).
- If different than the TSOP, unit obligations for processing replacements.
- Location to match replacement crews with replacement weapon systems.

b. Personnel Management. This paragraph should consider the following:

- Information and/or instructors concerning classification, assignment, promotion, transfer, reclassification, reduction, elimination, retirement, separation, training, and rotation of military personnel.
- Information on sources of civilian labor, restrictions on use of civilian labor, procurement policies and procedures, responsibilities of subordinate commanders, and other specific information not covered in the TSOP.
- Instructions and/or information concerning collection, safeguarding, processing, evacuation, use, treatment, and discipline of EPWs and civilian internees and/or detainees.
- Location of EPW and civilian internee and/or detainee facility.

_____
(Classification)

_____
(Classification)

TAB ___ (ADMIN-LOG) TO APP ___ (FA SPT) TO ANX ___ (FA SPT) TO OPORD

c. Development and Maintenance of Morale. This subparagraph should consider

instructions concerning the following:

- Leaves.
- Rest and recreation facilities.
- Decorations and awards.
- Postal and finance services.
- Chaplain activities and religious coverage.
- Personal hygiene.
- Morale support activities.
- Post exchange information.
- Legal assistance.

d. Maintenance of Discipline, Law, and Order. This subparagraph should consider information or instructions on the following:

- Soldier conduct and appearance.
- Control and disposition of stragglers.
- Location of straggler collecting points.
- Administration of military justice.
- Relations between military and civilian personnel.
- Respect for local laws.

_____
(Classification)

_____
(Classification)

TAB ___ (ADMIN-LOG) TO APP ___ (FA SPT) TO ANX ___ (FA SPT) TO OPORD ___

5. CIVIL AFFAIRS. This paragraph covers such civil affairs activities as the allocation of civil affairs units, control of refugees, feeding and treatment of civilian population if this information is not included in a separate tab. This paragraph also may include public affairs activities if not listed

as a separate tab.

6. MISCELLANEOUS. This paragraph contains special instructions that were not covered in previous paragraphs. Topics for consideration in this paragraph include the following:

- Location of rear boundary and other boundaries needed for CSS purposes.
- Pertinent instructions from the rear area protection plan for protection of CSS units.
- Identification of supporting unit requirements for information copies of personnel status report, logistics status report, and so on.
- Use of captured equipment.
- Point of contact for fielding or modification of new equipment.

7. COMMAND AND SIGNAL. This paragraph contains the following:

- HQ location and movements.
- Liaison arrangements.
- Recognition and identification instructions.
- Transmission type and time for special reports.
- General rules concerning the use of communications and other electronic equipment, if necessary.

Enclosures: Suggested enclosures to the admin-log tab include the following:

- CCL menus.
- CSS overlay.
- Circulation and control.

(Classification)

FIELD ARTILLERY SYNCHRONIZATION MATRIX TAB TO THE FIELD ARTILLERY SUPPORT PLAN

G-16. The FA synchronization matrix is a concise, easy planning and execution tool that shows the many factors of a complicated FA support plan. The matrix may help operations officers and commanders understand how the FA support plan supports the force OPLAN or OPORD. It is a valuable planning tool for both the offense and the defense. It explains aspects of the FA support plan for which each FA HQ is responsible and the phase during the battle when these

aspects apply. When approved, the matrix becomes a primary execution tool.

FORMAT

G-17. The format for this tab is the matrix. The matrix normally is set up with FA elements shown down the left side. Headings along the top of the matrix may be either phases, selected aspects, or a combination of the two on the basis of the local TSOP.

SYNCHRONIZATION MATRIX CONTENT

G-18. Information that should be considered for inclusion in the synchronization matrix includes the following:

- Maneuver actions and enemy actions.
- Tactical missions and changes to task organization.
- Position areas.
- Priority of fires.
- Priority of survey.
- FSCMs.
- Schedules.
- Decision points.
- MSU.
- Movement information.
- Reconnaissance.
- On-order missions.
- Rearming and/or refueling.
- Communications.

G-19. Suggested enclosures to the synchronization matrix tab include the following:

- Movement matrix. Considerations for inclusion in the movement matrix include the following:
  - Positions.
  - Routes.
  - Passage points.
  - Breach sites.
  - Start points, release points, and CPs.
  - Refuel points.
  - Priorities.
- Position area overlay.

Appendix H

Field Artillery Force Projection Operations

This appendix provides an overview of processes, techniques, and procedures for AC and RC artillery formations in response to a regional crisis or natural disaster. The projection of US forces may be from CONUS, outside the continental United States (OCONUS), or both in support of quick reaction contingency operations or involve a deliberate, slow buildup and deployment. Demands placed on FA RCs are particularly critical since almost 70 percent of the total Army's FA units are in the National Guard. This will require National Guard FA units to mobilize and deploy early. Such force projections normally occur in several stages: mobilization and predeployment activities; movement to ports of embarkation; strategic movement into the theater of operations; and RSOI within the designated area of operations. The FM 100-17 series of manuals provide detailed guidance on all phases of deployment and redeployment.

MOBILIZATION AND FORCE PROJECTION

H-1. Mobilization is the act of preparing AC/RC units for war and other emergencies ranging from a limited presidential call-up to total mobilization. In turn, force projection is a response to a military need or crisis by moving forces to an AO. The introduction of credible and lethal FA capabilities is a critical strategic and operational consideration for rapidly building combat power and enhancing force survivability. This is especially true in case of forced entry operations or other commitments that involve the potential for combat.

H-2. Since the preponderance of the Army's FA is found in the National Guard, the RC corps arty, FA brigades, battalions, and individuals should expect to be called up early to augment the AC force structure in response to warfighting requirements established by regional commanders-in-chief (CINCs) and doctrine (e.g., two FA brigades per deploying division). To respond effectively to shifting threats and contingency environments and fight as an integral part of joint and combined forces, FA formations must, therefore, be mission adaptive. Both AC and RC corps artys, div artys, and FA brigades must be able to reconfigure rapidly.

PREDEPLOYMENT/MOBILIZATION ACTIVITIES AND MOVEMENT TO PORT OF EMBARKATION

GENERAL

H-3. Predeployment activities are events normally accomplished by units and installations prior to and upon receipt of a force projection mission. The objective is to prepare, marshal, and outload equipment, weapons, and personnel for movement to ports of embarkation (POEs). Specific requirements

depend on whether deploying units are drawn from the active or reserve force. In either case, AC predeployment and RC mobilization activities generally occur simultaneously. Both begin with an alert process to set into motion actions necessary for the deployment and subsequent employment of forces. Activities by AC FA elements include all actions to prepare personnel and equipment for movement to POEs (specific tasks at cannon battalion level are listed in FM 6-20-1 and FM 100-17-4, *Deployment* [to be published]). Actions for RC FA units are more complex because mobilized units must first be integrated into the active force structure. In addition, they must complete individual and unit combat readiness certification prior to movement to POE.

ACTIVE COMPONENT DEPLOYMENT ACTIVITIES

H-4. AC FA elements may have to respond immediately or on short notice to deployment requirements. The initial alert is provided to corps artys and div artys by their parent organizations. When alerted, corps artys and div artys initiate predeployment crisis action or deliberate planning depending upon whether an OPLAN has already been published. They either review and update existing OPLANs or develop an operation order IAW higher HQ and their commander's planning guidance.

H-5. Installations that deploy forces must identify nondeploying units and/or individual manpower and units to assist in predeployment activities and movement to POE. FM 100-22, *Installation Management*, provides detailed guidance on installation responsibilities for mobilization and deployment. Since predeployment activities require a wide range of planning and execution steps, it is imperative that FA units and subordinate elements know the organization(s) that support them during each step of force projection operations and establish requisite peacetime coordination and SOPs. Non-deploying AC FA units may be required to assist RC FA units in mobilization station predeployment, and POE activities to attain combat ready status prior to deployment.

RESERVE COMPONENT MOBILIZATION

H-6. The mobilization of RC forces within CONUS is the responsibility of numerous commands and agencies: state area commands (STARCs); Army commands (ARCOMs)/general officer commands (GOCOMs); installation garrisons, continental United States Army (CONUSA); United States Army Reserve Command (USARC); and US Army Forces Command (FORSCOM) HQ. RC mobilization consists of five distinct phases and associated activities. Some of these are parallel to AC predeployment activities. Specifics are found in FM 100-17 and FORSCOM Regulation 500-3, Series 1 through 10.

H-7. Transfer of authority over mobilized FA units from STARCs or ARCOM/GOCOM to the mobilization station commander occurs at time of arrival. Transfer of command of RC FA brigades and/or battalions to AC corps or divisions may occur before the corps or divisions depart garrison location(s). Actions during this phase include processing of personnel and equipment and the actual transition of the unit into the active force structure. The goal is to attain an operationally ready status in the shortest possible time consistent with deployment plans or missions. This may require individual or collective training, additional cross-leveling, and soldier readiness processing (SRP) for

deployment. Units deploying personnel by air and shipping weapons and equipment by sea should anticipate special training requirements. This may be especially critical when FA weapon systems and associated equipment are shipped to POEs directly from home station. In such cases, special support will be required to conduct predeployment training and meet certification requirements at mobilization stations. This is a special challenge if similar, on-post AC FA units have already deployed with their weapons and equipment.

MOVEMENT TO PORTS OF EMBARKATION

H-8. Movement to POEs begins when units stage for movement after completion of SRP requirements and certification. It includes loading equipment and personnel on organic or commercial transportation. Units update equipment lists and submit them to appropriate authorities. Based on data provided, United States Transportation Command (USTRANSCOM) provides movement instructions to corps and divisions. These HQ then supervise the decentralized execution of movement instructions by subordinate units enroute from marshaling areas to designated POEs. In the process, FA CPs maintain communications with deploying units as long as feasible, modify deployments as required, and continue to update the FA-focused IPB/LPB and intelligence estimate enroute to the new AO.

INTERTHEATER FORCE DEPLOYMENTS

H-9. The intertheater deployment begins with a unit's departure from the POE and ends with arrival of units at an aerial port of debarkation/seaport of debarkation (APOD/SPOD) within the theater of operations. On such occasions, as forced entry operations, some units may be introduced well forward in airland or airdrop operations. This allows a commander to receive troops, equipment, and supplies as close as practical to where they are actually needed. Normally, supported CINCs assume command over corps, divisions, and subordinate elements when they depart the POE.

H-10. FA units will normally deploy carrying their basic loads of ammunition and other CSS supplies on organic transportation assets with additional sustainment support phased in with corps force projection packages. Accompanying supplies should be sufficient to meet expenditure requirements during the initial lodgment and expansion phases. Higher HQ must ensure that these basic loads are sufficient to sustain the force until normal supply operations can be initiated.

H-11. Deploying units should be able to receive updated intelligence while in transit. As necessary, unit staffs can then modify plans enroute and adjust to changing conditions.

DELIBERATE/BENIGN ENTRY OPERATIONS

H-12. Host nation and/or forward presence forces will generally support unopposed entry operations. This is the preferred option because it is low-risk and maximizes lift capabilities. During unopposed entry, CS and CSS forces may either precede or arrive concurrently with combat forces to conduct force reception and onward movement operations as planned by the theater

commander. Unopposed entry allows forces to peacefully deploy with the assistance of the host nation.

FORCED ENTRY OPERATIONS

H-13. Forced entry requires combat operations to establish an arrival site for deploying forces in theater. Forced entry forces must be lethal and survivable, tailored to carry out initial combat operations to secure an airhead, beachhead, or lodgment area. Follow-on forces expand lodgments and build up combat power to conduct extended combat operations. Early entry forces are predominately combat units to include FA formations.

H-14. Other than for raids, the corps is the Army's preferred organization for conducting such joint operations. Since the corps will initially have limited combat power ashore, it may have to rely on support from the other services (e.g., CAS and naval gunfire) while generating enough organic combat power to include FA to protect the force and pursue mission accomplishment. Army corps and divisions may also have to depend to a greater extent on joint, national, and/or host nation ADA and intelligence assets until organic assets are deployed into theater.

H-15. Early defeat, destruction, or control of enemy forces posing an immediate threat to the lodgment area is a key consideration. The objective of corps or division early entry operations must be the establishment of suitable ports of debarkation (POD) to support mission accomplishment. FA units may participate in opposed or unopposed entry operations or a combination of the two.

RECEPTION, STAGING, ONWARD MOVEMENT, AND INTEGRATION

GENERAL

H-16. RSOI is a critical link between deployment and combat operations. The CINC or JFC develops theater reception, staging, and onward movement plans for arriving forces except in the case of forced entry. The reception, staging, and onward movement of arriving units should be focused on expediting their integration into the theater force structure and readying them for combat while making effective and efficient use of CSS assets assigned to the RSOI mission.

H-17. The ASCC is normally the HQ assigned the RSOI mission for arriving Army forces. Unity of command is critical to successful RSOI operations. Arriving FA formations should be processed as units to maximize unit integrity, expedite operations, and decrease time required to move into tactical assembly areas (TAAs). Except for forced entry operations, critical CSS elements will either precede or arrive concurrently with corps arty, div arty, and FA brigades. They will assist in processing units through the POD and establish marshaling areas. Also, depending on the situation, deploying FA units may initially be supported by a CONUS projected logistic task force, by another service component, host nation support organizations, Department of the Army civilians, and/or in-country contract personnel.

RECEPTION

H-18. This phase begins with the arrival of ships and aircraft at designated APODs/SPODs in the theater of operations. It ends when units depart port areas. Reception activities include unloading and moving personnel and material into staging areas; drawing prepositioned equipment; providing life support; establishing personnel and equipment accountability; and preparing for staging.

STAGING

H-19. In this phase, corps and/or divisions and subordinate units, supported where possible by host nation or forward-presence forces, protect friendly forces even in apparently benign entry operations. FA formations organized for combat based on latest available information, build combat capabilities, conduct training, and acclimate soldiers to the environment.

ONWARD MOVEMENT

H-20. Onward movement begins with the linkup of arriving personnel and equipment in marshaling areas and continues with moving units and material to TAAs and sustainment stocks to forward distribution sites. This phase ends when units arrive in TAAs within corps or division AOs and with the transfer of ASCC control over follow-on forces to in-place corps and divisions.

INTEGRATION

H-21. The integration of arriving units is focused on a seamless transition between phases and the expeditious transfer of C2 over arriving units to designated tactical commanders.

POSTCONFLICT ACTIVITIES

H-22. Postconflict operations are the transition from hostilities to restoration of peacetime activities. They involve reconstitution and redeployment planning. While remaining alert for a potential resumption of hostilities, FA elements may also be called to support humanitarian assistance, population and prisoner of war control, and refugee operations.

Appendix I

Field Artillery Command, Control, and Communications Structure

The purpose of this appendix is to provide an overview of how the FA fits into the Army's communications architecture. Section I describes major systems and components used by artillerymen on a daily basis to communicate with higher, lower, and adjacent organizations and highlights associated capabilities and limitations. Sections II through IV discuss corps arty, div arty, and FA brigade communications structures.

SECTION I - SYSTEM DESCRIPTIONS

ARMY BATTLE COMMAND SYSTEM

I-1. The Army battle command system (ABCS) links strategic, operational, and tactical headquarters. It is the umbrella system encompassing the existing Army tactical command and control system (ATCCS), global command and control system-Army (GCCS-A), and the emerging FBCB2 system.

I-2. To meet tactical communications requirements from brigade to corps, the Army has fielded the ATCCS. It provides a standard communications architecture consisting of five computerized and automated battlefield functional area control systems (BFACS). These include the AFATDS; MCS; CSS communications system (CSSCS); all-source analysis system (ASAS); and forward area air defense command, control, communications and intelligence system (FAADC3I). Figure I-1 shows the interrelationship among the communications systems and BFACs. Common application software specifies common protocols, system languages, report formats, and necessary interfaces to ensure an overall cohesive and compatible force C2 system.

I-3. The ATCCS relies on four mutually compatible communications subsystems to link the BFACS. They are the CNR system, ACUS, ADDS, and the broadcast communication system.

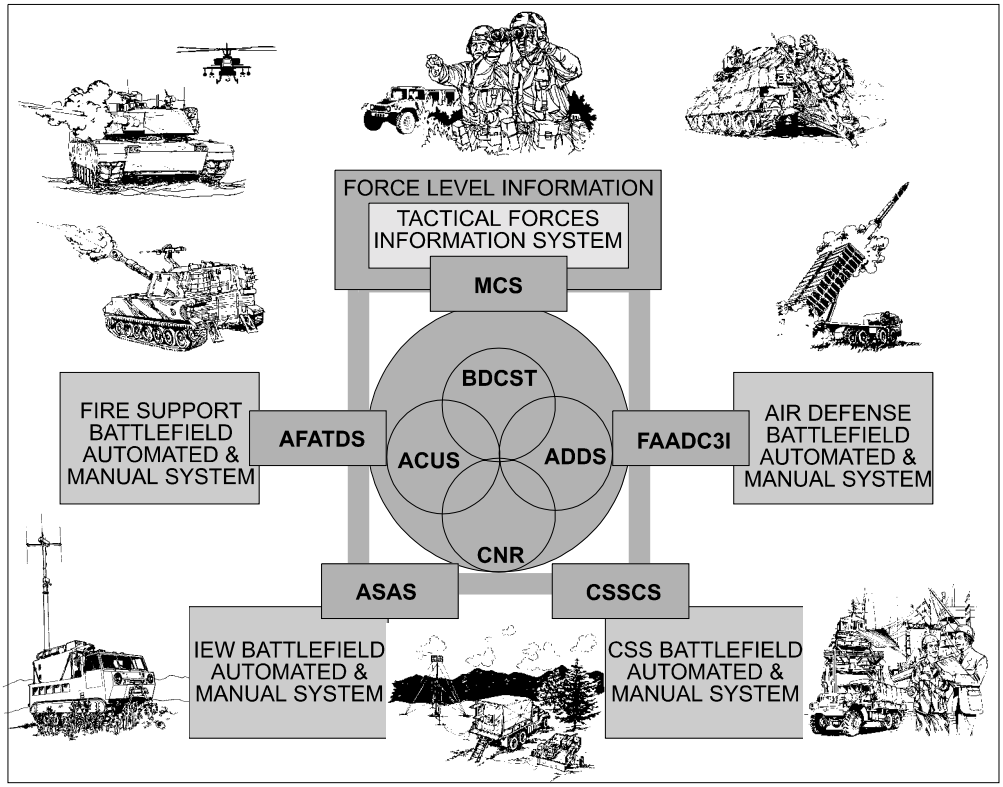

Figure I-1. Battlefield Functional Area Control System Interconnectivity

COMBAT NET RADIO SYSTEM

GENERAL

I-4. The CNR system includes the FM very high frequency (VHF) SINCGARS, high frequency (HF) AM radios, and TACSAT radio systems.

SINCGARS

I-5. SINCGARS is the FA's most widespread communications system. It is found in significant numbers in most FA units. These radios are portable, mobile, and can be used on the move more easily than other CNR systems. Although limited in range, their reach can be significantly extended with directional antennas, retransmission stations, or relays.

I-6. SINCGARS transmits both voice and limited data traffic and resists jamming and other electronic attack techniques by frequency hopping. Imbedded communications security (COMSEC) further contributes to survivability.

HIGH FREQUENCY RADIOS

I-7. HF AM radios extend ranges beyond that possible with VHF radios such as SINCGARS. They are reliable with good frequency management and antenna selection and can be used in a retransmission mode to extend the ranges of VHF nets. Current versions available for FA use are the vehicular-mounted, short-

range AN/GRC-213 and the long-range AN/GRC-193 HF radios. Both supports secure voice and data transmission.

I-8. HF radios are a scarce FA resource. Div artys are authorized one AN/GRC-193, normally located in the FA TOC, and FA brigades one for each of two liaison teams. Corps artys have as many as 17, but only 2 are in the FA TOC. The remainder are in liaison and FS sections and not available to extend the range of FA internal nets. In addition, MLRS battalions have one AN/GRC-193 radio in the TOC and one in each battery operations center, increasing the ability of div artys and FA brigades to talk on internal nets to MLRS batteries.

TACTICAL SATELLITE RADIOS

I-9. Single-channel TACSAT radios carry both voice and data traffic globally, virtually eliminating distance constraints inherent in other CNR systems. Besides range, the main advantages of TACSAT radios are increased security and relative EW immunity. L-series TOEs do not authorize TACSAT radios in FA units. However, they may be available under MTOE authorizations. For contingency operations, corps artys and div artys need to include TACSATs in their C2 architecture planning.

I-10. Corps commanders may also direct that single-channel Earth stations be provided to subordinate brigade-sized elements, particularly if distances or terrain over which units operate exceed other CNR system capabilities.

AREA COMMON USER SYSTEM

GENERAL

I-11. The second ATCCS communication subsystem is ACUS, a digital battlefield telecommunications system composed of switching, transmission, network control, tri-services tactical (TRITAC), and MSE. Although ACUS was designed to handle primarily voice traffic, text and graphics can also be transmitted in hard copy via facsimile (fax). ACUS reduces significantly the need for FA CP-internal wire communications and also provides for a CNR interface and secure data transmission. During movement, continuous communication is possible by using mobile telephones available on the vehicles of FA commanders and key FA staff officers.

I-12. Because of the limited number of available MSE circuits, ACUS cannot provide the number of dedicated, sole-user circuits to meet FA data exchange requirements. For example, corps arty requires dedicated lines to each subordinate div arty, FA brigade, cannon or MLRS battalion, FSE, and liaison section. Even if all MSE circuits were made available for FA use, the MSE network could not support FA data transmission requirements.

MOBILE SUBSCRIBER EQUIPMENT

I-13. MSE eliminates the requirement for radio teletypewriter (RATT) capabilities previously provided by signal units and RATT teams organic to FA units. FA units use the following four key pieces of equipment to operate within the MSE network:

Voice Telephone

I-14. The digital nonsecure voice telephone is the conventional MSE telephone found in TOCs, ALOCs, FSEs, and subordinate units down to battery level.

Mobile Subscriber Radiotelephone

I-15. The AN/VRC-97 mobile subscriber radiotelephone (MSRT) is the cellular telephone of the MSE system. Corps arty, div arty, and FA brigade commanders and key staff officers have MSRTs mounted on their vehicles. The MSRTs can also be remoted into CPs.

Lightweight Digital Facsimile

I-16. When connected to the MSE network through a digital telephone, the AN/UXC-7 lightweight digital facsimile (LDF) sends and receives text and graphics in hard copy.

Communications Terminal

I-17. The communications terminal is a message terminal designed to replace message centers in certain applications. The terminal is a device using standardized joint and allied formats.

DIGITAL MSE TRANSMISSIONS

I-18. When the EPLRS is not available, most digital traffic among artillery units will be by CNR primarily using FM (SINCGARS) radios. When distances or other considerations make this impractical, HF or TACSAT CNR systems or MSE can serve as alternatives. Although MSE has the advantage of relative signal clarity and area coverage over CNRs, it is limited in meeting FA digital network requirements.

ARMY DATA DISTRIBUTION SYSTEM

I-19. ADDS is the third ATCCS communications subsystem. In contrast to ACUS and CNRs, it is optimized to carry data traffic, providing medium and high-volume, real-time data communications. It consists of EPLRS, the near-term digital radio, and the joint tactical information distribution system (JTIDS). EPLRS is currently being fielded to early deploying units. It is a robust, reliable, jam-resistant data-only system that passes targeting data, combat orders, situation reports, intelligence data, and other message traffic among friendly tactical units.

BROADCAST SYSTEMS

I-20. Broadcast communication systems use technology similar to commercial television and radio stations, where transmit-only stations send information to many receive-only stations over HF, satellite, or other means. Examples of current and planned broadcast communication systems include JSTARS, tactical information broadcast service (TIBS), tactical receive equipment and related application (TRAP), and the tactical data information exchange system (TADIXS).

GLOBAL POSITIONING SYSTEM

I-21. GPS is a satellite-based, global, all-weather radio navigation system for an unlimited number of users. Army GPS equipment consists of passive receivers that provide accurate navigation information for maneuver and support forces, precise positioning for FA firing platforms and target location for precision munitions in support of deep fires by FA indirect fire systems, and precise timing for C2 systems.

FIRE PLANNING AND DIRECTION SYSTEMS

ADVANCED FIELD ARTILLERY TACTICAL DATA SYSTEM

I-22. AFATDS is composed of a common suite of hardware and software in varying configurations at different operational facilities (OPFACs) interconnected by tactical communications. Major components are transportable computer unit (TCU), medium/large screen display (MSD/LSD) units, and the fire support terminal (FST). The TCU consists of a hard drive, archival device, communications modem, uninterruptible power supply, and printer. When two or more computers work as a single OPFAC, one TCU acts as the system controller. The FST consists of the same components as the TCU except for the modem and printer. The TCU will be replaced by the lightweight computer unit (LCU), a laptop unit for ease of use by commanders, FSOs, and LNOs. The MSD/LSD is used at battalion and higher HQ. The hardware is mounted in the M1068 CP carrier and the 5-ton expandable van in heavy units and the rigid wall shelter in light units.

I-23. First issued in 1995, AFATDS is the FA's integrated battery-to-corps battlefield management and decision support system. As the fire support node of the ATCCS BFACS (paragraph I-2 above), it interfaces across the battlespace with all existing and future FS systems; other ATCCS functional area systems; other services; allied forces (German Adler & United Kingdom Bates); and joint command, control, communications, computers and intelligence (C4I) systems. AFATDS enhances the responsiveness, survivability, and continuity of FS operations via dispersed processing centers, intelligent remote terminals, and distributed database management.

I-24. AFATDS is capable of interfacing with the other four ATCCS components in message or hard-copy format. In case of MCS, this equates to the transmission of friendly SITREPs, battlefield geometry, and free text messages. The interface with ASAS is more extensive and includes the following: mission fired report, commander's targeting criteria, intelligence summary, artillery intelligence criteria, target coordination request, free text, and target intelligence data report.

I-25. AFATDS automates screening and filtering of potential targets and mission requests to include target clearance and coordination in accordance with the commander's targeting guidance and attack criteria. Decision aids permit fully automated fire mission processing. For example, in contrast to the tactical fire direction system (TACFIRE), AFATDS prioritizes fire missions based on target value analysis and ensures that fire missions comply with FS coordination measures and unit zones of responsibility. It is also capable of deciding which FS asset should engage a particular target (e.g., FA, mortars, attack helicopters, naval gunfire, or air) and recommending the best attack

method for a given system (e.g., two battalion volleys, DPICM, from 1-3 FA). Although commanders can specify which missions to stop for review/coordination and can resort to voice execution similar to TACFIRE, human intervention is not recommended as a normal routine. AFATDS was designed to plan and execute digitally for optimum efficiency.

INITIAL FIRE SUPPORT AUTOMATION SYSTEM

I-26. The IFSAS was designed to provide limited automation of FS C2 at battalion level and above. It replaces the TACFIRE system in corps, divisions, and brigades in active Army, Army National Guard, and USMC FA units until they receive AFATDS. It uses the ATCCS LCU with TACFIRE Version 10 in a single or dual configuration (FSE or FDC).

FORWARD ENTRY DEVICE

I-27. The forward entry device (FED) is a small, four-channel tactical processor and communications terminal with the ability to communicate while on the move. It has an interactive display and the capability to rapidly process and display formatted free text and graphics. The FED has an internal modem for transmitting and receiving messages from an AFATDS fire support hand-held terminal unit (FSHTU), another FED, and standard military radios.

COMMANDER'S TACTICAL TERMINAL-HYBRID

I-28. The commander's tactical terminal-hybrid (CTT-H) is a tactical transceiver capable of receiving data from the tactical reconnaissance information exchange, TIBS, and related intelligence networks over three channels. Information is used for situation developing and targeting applications. It provides the artillery near-real-time access to time-sensitive, secure targeting information for the timely engagement of priority targets. CTT-Hs are being embedded in systems such as AFATDS, CGS, and ASAS and are found in corps and divisions FSEs (main and tactical CP) at corps arty and in selected FA brigades. FA brigades not receiving JSTARS GSMs and MLRS battalions are issued a stand-alone CTT-H, which requires a host processor in the form of either a separate terminal or a software package for an existing AFATDS.

I-29. The following table provides terms and symbols used in Sections II through IV below:

Table I-1. Communications Terms and Symbols

A	as-required subscriber	N	net control station
admin/log	administration/logistics (radio net)	O&I	operations and intelligence
arty	artillery	ops/F	operations/fire (radio net)
cdr	commander	ops/intel	operations/intelligence (radio net)
CF	command/fire direction (radio net)	regt	regiment
cmd	command (radio net)	RSO	reconnaissance survey officer
cmd/ops	command/operations (radio net)	sec	section
D	digital	spt	support
dep	deputy	tac	tactical
F	fire or fire direction (radio net)	V	voice
FAIO	field artillery intelligence officer	W	wire connection
M	MSE network	X	subscriber
mvr	maneuver		

SECTION II - CORPS ARTY COMMUNICATIONS STRUCTURE

I-30. To perform their mission, corps artys employ six internal and three external communications nets using CNRs, internal wire systems, ACUS, ADDS, messengers, and liaison officers. In relatively static situations, most or all of the functions described below may be accomplished with ACUS assets. When the tactical situation prevents the use of MSE, CNRs provide the necessary flexibility to continue the mission. Table I-2 shows corps arty internal and external networks and subscribers.

CORPS ARTY INTERNAL NETWORKS

I-31. Corps artys perform senior-to-subordinate responsibilities on five internal CNR nets and one internal MSE network as described below:

- Corps Arty Cmd (VHF-FM) (V) Net. The corps arty command (VHF-FM) (Voice) net is used for C2, tactical operations, intelligence, and voice FS coordination matters with all corps arty elements and units (organic, attached, and R). The corps arty operations element is NCS.
- Corps Arty Ops/Fire (VHF-FM) (D) Net. Corps arty operations/fire direction nets 1, 2, and 3 (VHF-FM) (Digital) nets are identical. Individual net assignments are made to subelements on the basis of METT-TC and technical requirements. They are used for FS coordination, TA, met data, and tactical fire direction. The corps arty FCE is net control station (NCS).
- Corps Arty Cmd/Ops (improved high frequency radio (IHFR)-AM) (V) Net. The corps arty command/operations (IHFR-AM) (Voice) net is the corps arty commander's long-range C2 control link to subordinate FA units in the corps area. It allows the commander to perform both command and fire control functions for units beyond FM radio range. The corps arty O&I cell is NCS.
- Corps Arty Survey (VHF-FM) (V) Net. The corps arty survey (VHF-FM) (Voice) net is used for survey data processing by all survey elements within corps arty and subordinate artillery elements. The corps arty SPCE is NCS.
- Corps Arty Admin/Log (VHF-FM) (V) Net. The corps arty administration/logistic (VHF-FM) (Voice) net is used for coordination of administrative and logistic matters when MSE is not available or otherwise desirable. The corps arty ALOC is NCS.
- Corps Arty CF (MSE) (V-FAX) Network. The corps arty command/fire (MSE) (Voice-FAX) network is a multipurpose area network used for both C2 and fire direction coordination with units at greater than VHF range from corps arty TOCs. It also is used for hard copy message traffic.

Table I-2. Corps Arty Communications Network Matrix

	INTERNAL						EXTERNAL				
	Corps Arty Cmd (VHF-FM) (V)	Corps Arty Ops/F 1, 2, 3 (VHF-FM) (D)	Corps Arty Cmd/Ops (IHFR-AM) (V)	Corps Arty Cmd/Fire (MSE) (V-FAX)	Corps Arty Survey (VHF-FM) (V)	Corps Arty Admin/Log(a) (VHF-FM) (V)	Corps Cmd/Ops(b) (VHF-FM) (V)	Corps Admin/Log(a) (VHF-FM) (V)	Corps Fire Spt (IHFR-AM) (V)	Corps Cmd(d,b) (TACSAT)	Corps O&I(d,b) (TACSAT)
Corps Arty Cdr	X						X				
Corps Arty Dep Cdr	X						X				
Corps Arty CofS	X						X				
O&I Cell	N	W	N	M	A	A	X		X	X	X
Fire Control Cell		N									
Corps Arty G3	X										
Corps Arty G1 or G4											
Corps Arty ALOC	A					N		A			
SPCE	X				N						
HHB Cdr	X										
Corps Main FSE		X		M					N		
FAIO (c)											
Corps Tac FSE		X		M					X		
Corps Rear FSE(d)		X		M					X		
Div FSE-Main									X		
LNOs		X							X		
Atk Hel Bde FS Sec		X							X		
Div Arty CP	A	X	A	M							
Div Arty SPCE					X						
Div Arty ALOC						A					
FA Bde CP	X	X	X	M					A		
FA Bde SPCE					X						
FA Bde HQ Spt Sec						A		A			

(a) Most admin/log traffic is carried on ACUS.
(b) Maneuver operations and intelligence traffic is also carried on MCS.
(c) The FAIO is connected in the corps main FSE by TA-312 and WD-1 wire.
(d) When established by corps.

CORPS ARTY EXTERNAL NETWORKS

I-32. Corps arty performs its supporting-to-supported responsibilities primarily over ACUS/MSE. All hard-copy communications use MSE fax capabilities. Secondary means of communications are three external CNR nets.

AREA COMMON USER SYSTEM

I-33. The corps signal brigade establishes ACUS access points interconnected by automatic switching equipment. As noted in Chapter 2, dedicated, sole-user circuits are the exception rather than the rule. The corps arty signal staff officer must closely coordinate with the corps signal brigade to ensure adequate

common-user assets are provided. Specific requirements depend on the location of corps arty CPs:

- When collocated with the corps main CP, the corps arty CP has access to the MSE large extension node (LEN) that habitually supports the corps main CP.
- If located at distances greater than 3 km from the corps main CP, corps arty requires a dedicated extension node to connect to ACUS.

COMBAT NET RADIOS

I-34. As secondary means of external communications, the corps arty CP employs the following three CNR nets:

- Corps Cmd/Ops (VHF-FM) (V) Net. Corps use the command/operations (VHF-FM) (Voice) net to control elements of the corps HQ and supporting HQ company assets. It also is used to communicate with subordinate units when located within FM radio range.
- Corps FS (IHFR-AM) (Voice) Net. The corps fire support (IHFR-AM) (V) net is used by FSEs, LNOs, and CPs for coordination and the clearance of fires. The corps main FSE is NCS.
- Corps Admin/Log (VHF-FM) (V) Net. The COSCOM CP establishes and monitors the corps administration and logistic (VHF-FM) (Voice) net. However, at corps level, virtually all logistic traffic is carried on ACUS.

TACTICAL SATELLITE

I-35. When the corps uses single-channel TACSAT CNRs to operate the corps command (Warfighter) net and/or corps ops/intel nets, corps arty will be provided the necessary TACSAT terminal through the corps signal brigade.

WIRE COMMUNICATIONS

I-36. Wire is used for internal CP circuits and to interface with ACUS for long-line MSE communications with subordinate units.

SECTION III - DIV ARTY COMMUNICATIONS STRUCTURE

I-37. To integrate divisional FA assets, div artys must communicate with organic and reinforcing firing units, supported units, and senior artillery HQ (usually corps arty). The communications matrix in Table I-3 shows a div arty with a DS standard tactical mission. Subordinate battalions and batteries may be assigned any of the four standard tactical missions. Occasionally, div artys may be responsible for one of the other three standard tactical missions, be given a nonstandard tactical mission, or receive a special tasking (for example, supporting a corps preparation). In these situations, the div arty communications network architecture is similar to that of an FA brigade with the same commitment. Table I-3 also assumes that the div arty has either AFATDS or IFSAS automated fire control equipment. In non-automated units, networks indicated as digital will be voice until the required digital equipment is received.

DIV ARTY COMMUNICATIONS NET STRUCTURE

I-38. Div artys perform their responsibilities on 6 internal and as many as 11 external functional networks as indicated in Table I-3.

DIV ARTY INTERNAL NETS

I-39. Div artys perform senior-to-subordinate responsibilities on the following six internal CNR nets:

- Div Arty Cmd (VHF-FM) (V) Net. The div arty command (VHF-FM) (Voice) net is used for C2, tactical operations, and dissemination of intelligence information with all subordinate FA units. The div arty TOC operations section is NCS.
- Div Arty Ops/F 1, 2, and 3 (VHF-FM) (D) Net. The div arty operations/fire 1, 2, and 3 (VHF-FM) (Digital) nets are used for tactical fire direction orders, fire support coordination, and meteorological data. DS battalions, other artillery units (including reinforcing FA brigades), and FSEs at division tactical and main CPs (if not collocated) normally will be in one of the ops/F nets. The div arty FCE is NCS.
- Div Arty TA/Intel(VHF-FM) (D) Net. The div arty target acquisition/intelligence (VHF-FM) (Digital) net is used to process digital information from aerial observers and AN/TPQ-37 radars (when a TAB or CTAD is attached). AN/TPQ-36 radars under div arty control are also net subscribers. The NCS is the div arty targeting element.
- Div Arty CF (MSE) (V-FAX) Network. The div arty command fire (MSE) (Voice-FAX) network is a multipurpose area network. It is used for C2 and fire direction coordination with units at greater-than-VHF ranges from the div arty TOC and in situations when hard copy message traffic is needed.
- Div Arty Survey (VHF-FM) (V) Net. The div arty survey (VHF-FM) (Voice) net is used for data processing by all survey elements within div arty and subordinate battalions. The div arty SPCE is NCS.
- Div Arty Admin/Log(VHF-FM) (V) Net. The div arty admin/log (VHF-FM) (Voice) net is used to coordinate div arty administration and logistic matters when use of ACUS is not possible. The div arty ALOC is NCS.

Table I-3. Div Arty Communications Networks

	INTERNAL						EXTERNAL											
	Div Arty Cmd (VHF-FM) (V)	Div Arty Ops/F 1, 2, 3 (VHF-FM) (D)	Div Arty CF (MSE) (V-FAX)	Div Arty TA/Intel (VHF-FM) (D)	Div Arty Survey (VHF-FM) (V)	Div Arty Admin/Log(a) (VHF-FM) (D)	Mvr (div) Cmd/Ops(b) (VHF-FM) (V)	Mvr (div) Intel(b) (VHF-FM) (V)	Mvr (div) Fire Spt (VHF-FM) (V)	Mvr (div) Admin/Log(a) (VHF-FM) (V)	Corps Arty Cmd (VHF-FM) (V)	Corps Arty Cmd/Ops (IHFR-AM) (V)	Corps Arty Ops/F 1, 2, 3 (VHF-FM) (D)	Corps Arty CF (MSE) (V-FAX)	Corps Arty Survey (VHF-FM) (V)	Corps Arty Admin/Log(a) (VHF-FM) (V)	Corps FS (IHFR-AM) (V)	Div Cmd(c) (TACSAT)
Div Arty Cdr	X						X											
Div Arty XO	X					X												
O&I Cell	N		M			A	X				X	X		M				X
Targeting Element		W		N				X	X									
Fire Control Cell		N											X					
Div Arty S3							X											
Div Arty RSO	X																	
Div Arty SPCE					N										X			
Div Arty ALOC	A		M			N				A						A		
Div Main FSE		X	M						N								X	
Div Tac FSE		X	M						X									
Div Rear FSE		X(d)	M						X									
Bde FSO									X									
Bde FSE									X									
Avn Bde FSE		X							X									
Atk Hel Bn FSE		X							X									
Div Cav Sqdn FSE		X							X									
LNOs		A							X									
R or GSR FA Bde Cdr	X																	
R or GSR FA Bde CP	X	X	M	X			A	A	A		X	X	X	M			A	
R or GSR FA Bde SPCE					X										A			
R or GSR FA Bde HQ Spt Sec						A										A		
FA Bn Cdr	A																	
FA Bn CP	X	X	M	X														
FA Bn RSO					X													
FA Bn ALOC/BSOC						A				A								
Radars (organic and attached)				X														

(a) Most admin/log traffic is carried on the ACUS.
(b) Maneuver operations and intelligence traffic are also carried on the MCS.
(c) When established by division.
(d) If digital device is available.

DIV ARTY EXTERNAL NETS

I-40. Div artys with a DS mission may be required to operate a standard external communications architecture with up to 11 functional networks. The architecture may have to be modified by commanders and staff signal officers to meet specific communications requirements in response to special missions.

- Division Cmd/Ops (VHF-FM) (V) Net. The division command/operations (VHF-FM) (Voice) net is a maneuver C2 and tactical operations net for coordination and reporting of tactical information. The division operations cell is NCS.
- Division Intel (VHF-FM) (V) Net. The division intelligence (VHF-FM) (Voice) net is a maneuver intelligence net for real-time intelligence information and spot reports. In most situations, the bulk of intelligence traffic is carried on ACUS. The division intelligence cell is NCS.
- Division FS (VHF-FM) (V) Net. The division fire support (VHF-FM) (Voice) net is used for FS coordination and as the alternate for fire direction throughout the division to include coordination of CAS with the combat aviation brigade or battalion as well as sister services. The FSE at division TOC (main) is NCS.
- Division Admin/Log (VHF-FM) (V) Net. The division administration/logistic (VHF-FM) (Voice) net is used to coordinate logistic requirements with the division CSS staff when it is not possible to use MSE. The division CSS cell is NCS.
- Corps Arty Cmd (VHF-FM) (V) Net. See Section II.
- Corps Arty Cmd/Ops (IHFR-AM) (V) Net. See Section II.
- Corps Arty Ops/F 1, 2, or 3 (VHF-FM) (D) Nets. See Section II.
- Corps Arty CF (MSE) (V-FAX) Network. See Section II.
- Corps Arty Survey (VHF-FM) (V) Net. See Section II.
- Corps Arty Admin/Log (VHF-FM) (V) Net. See Section II.
- Corps FS (IHFR-AM) (V) Net. See Section II.

TACSAT

I-41. If the division operates single-channel TACSAT on the division command (Warfighter) net and/or ops/intel nets, then div arty will operate on these nets with assets provided through the corps signal brigade.

WIRE COMMUNICATIONS

I-42. The HHB communications section uses available wire assets to establish external circuits to subordinate elements and local CP wire networks and to provide access to ACUS. These circuits normally reflect higher-to-lower relationships, such as div arty establishing a voice or digital link with subordinate battalions.

DIV ARTY AREA COMMON USER SYSTEM

I-43. Division signal battalions or corps signal brigades provide ACUS access points. Div arty CPs are normally assigned a SEN, unless the CP is habitually collocated with another HQ, such as the division main CP. If located at

distances greater than 3 km from the large extension node at the division main CP, the div arty CP requires a dedicated extension node to connect into the common user system. Positioning and moving the SEN is the joint responsibility of the div arty signal staff officer and HHB commander. When packet switching becomes universally available, ACUS will be able to support digital traffic with minimal disruption to its primary function as a carrier of voice traffic. Until that time, the div arty signal staff officer must closely coordinate with the division signal battalion to ensure availability of adequate common user assets.

SECTION IV - FA BRIGADE COMMUNICATIONS STRUCTURE

I-44. FA brigades must be highly flexible in designing and modifying their communications network architecture. When in DS of a committed maneuver brigade or ACR, FA brigades will process most calls for fire and coordinate fire support in brigade and battalion fire support CNR nets. Later, if the same brigade is in GS of corps, it communicates only with corps arty over ACUS/MSE. As missions change, commanders and signal officers must allocate available assets to establish communications based on responsibilities inherent in the assigned FA tactical missions. FA brigades perform senior-to-subordinate and supporting-to-supported responsibilities on five internal and a number of external networks. The brigade's tactical mission and special tactical requirements determine the exact number and type of external networks. The following three matrices in Tables I-4 through I-6 show FA brigade communications architectures when assigned one of the four standard tactical missions.

FA BRIGADE INTERNAL NETS

I-45. The five internal FA brigade nets are:

- FA Brigade Cmd (VHF-FM) (V) Net. The FA brigade command (VHF-FM) (Voice) net is used for C2, tactical operations, and intelligence operations by all FA brigade elements. The FA brigade operations section in the FA brigade TOC is NCS.
- FA Brigade Ops/F 1, 2, and 3 (VHF-FM) (D) Net. FA brigade operations/fire 1, 2, and 3 (VHF-FM) (Digital) nets are used for tactical fire direction orders, FS coordination, and met data. Depending on the mission, other artillery units will be assigned to one of these nets. The FA brigade FCE is NCS.
- FA Brigade CF (MSE) (V-FAX) Network. The FA brigade command fire (MSE) (Voice-FAX) network is a multipurpose area network. It is used for both C2 and fire direction coordination with units at a greater-than-VHF range from the FA brigade and for situations in which hard copy of message traffic is needed.
- FA Brigade Survey (VHF-FM) (V) Net. The FA brigade survey (VHF-FM) (Voice) net is used for survey data processing by all survey elements within FA brigades and subordinate battalions. FA brigade SPCEs in FA brigade TOCs are NCS.

- FA Brigade Admin/Log (VHF-FM) (V) Net. The FA brigade administration and logistic (VHF-FM) (Voice) net is used for coordination of all administrative and logistic matters within the brigade when ACUS is unavailable. The ALOC is NCS.

FA BRIGADE EXTERNAL NETS

I-46. As a corps asset, FA brigades must maintain constant communications with corps arty. When attached to a division, maneuver brigade, or ACR, the brigade's external communications network should support the mission assigned by the maneuver commander. Communications with corps arty should also be maintained, although there is no absolute requirement to do so. The example network architectures shown in Figures I-4 to I-6 assume that the brigade is in GS to the corps, R or GSR to a div arty, or DS to a divisional maneuver brigade, respectively.

WIRE COMMUNICATIONS

I-47. Available wire assets are used primarily to provide ACUS access and to establish local CP wire networks and external circuits with subordinate elements. These circuits normally reflect higher-to-lower relationships, such as brigades establishing voice or digital links with subordinate battalions. The brigade's communications section is responsible for establishing external wire circuits and for system troubleshooting. Individual users are responsible for connecting MSE terminals to signal battalion extension nodes.

FA BRIGADE AREA COMMON USER SYSTEM

I-48. Division signal battalions or corps signal brigades provide ACUS access points. The FA brigade CP is normally supported with a SEN unless the CP is habitually collocated with some other HQ. Positioning and moving the SEN is the joint responsibility of the brigade signal staff officer and the HHB commander.

Table I-4. FA Brigade Communications Network Matrix (GS Tactical Mission)

	INTERNAL					EXTERNAL												
	FA Bde Cmd (VHF-FM) (V)	FA Bde Ops/F 1, 2, 3, 4 (VHF-FM) (D)	FA Bde CF (MSE) (V-FAX)	FA Bde Survey (VHF-FM (V)	FA Bde Admin/Log(a) (VHF-FM) (V)	Div Arty Cmd (VHF-FM) (V)	Div Arty Ops/F 1, 2, 3(VHF-FM) (D)	Div Arty TA/Intel (VHF-FM (D)	Div Arty Survey(VHF-FM) (V)	Div Arty Admin/Log(a) (VHF-FM) (V)	Mvr (div) Fire Spt (VHF-FM) (V)	Corps Arty Cmd (VHF-FM) (V)	Corps Arty Ops/F 1, 2, 3 (VHF-FM) (D)	Corps Arty Cmd/Ops (IHFR-AM) (V)	Corps Arty survey (VHF-FM) (V)	Corps Arty admin/Log(a) (VHF-FM) (V)	Corps fire spt (IHFR-AM) (V)	Corps Arty CF (MSE) (V-FAX)
FA Bde Cdr	X											X(b)						
FA Bde XO	X				X													
O&I Cell	N		M		X							X(b)		X			A	M
Targeting Element	X	W						A										
Fire Control Cell		N											X					
FA Bde SPCE				N											X(b)			
FA Bde HQ Spt Sec			M		N											A(b)		
LNOs	A	X												A(b)			X	
Radars (attached)	A	X																
FA Bn Cdr	X																	
FA Bn CP	X	X	M															
FA Bn RSO				X											A(b)			
FA Bn ALOC/BSOC					A													

(a) Most admin/log traffic is carried on ACUS.

(b) On the basis of the availability of MSE, these nets may be satisfied by MSE links with the approval of the force artillery commander.

Table I-5. Communications Network Matrix (R and/or GSR Tactical Mission)

	INTERNAL					EXTERNAL												
	FA Bde Cmd (VHF-FM) (V)	FA Bde Ops/F 1, 2, 3, 4 (VHF-FM) (D)	FA Bde CF (MSE) (V-FAX)	FA Bde Survey (VHF-FM (V)	FA Bde Admin/log(a) (VHF-FM) (V)	Div Arty Cmd (VHF-FM) (V)	Div Arty Ops/F 1, 2, 3(VHF-FM) (D)	Div Arty TA/Intel (VHF-FM (D)	Div Arty Survey (VHF-FM) (V)	Div Arty Admin/Log(a) (VHF-FM) (V)	Mvr (div) Fire Spt (VHF-FM) (V)	Corps Arty Cmd (VHF-FM) (V)	Corps Arty Ops/F 1, 2, 3 (VHF-FM) (D)	Corps Arty Cmd/ops (IHFR-AM) (V)	Corps Arty Survey (VHF-FM) (V)	Corps Arty Admin/Log(a) (VHF-FM) (V)	Corps fire Spt (IHFR-AM) (V)	Corps Arty CF (MSE) (V-FAX)
FA Bde Cdr	X					X						X(b)						
FA Bde XO	X				X													
O&I Cell	N		M		X	X		X			A	X(b)		X			A(b)	M
Targeting Element	A	W									X							
Fire Control Cell		N					X						X					
FA Bde SPCE				N					X						X(b)			
FA Bde HQ Spt Sec			M		N					A						A(b)		
LNOs	A	X									A			A(b)			X(b)	
Radars (attached)		A					X											
FA Bn Cdr	X																	
FA Bn CP	X	X	M					X					A					
FA Bn RSO				X					A									
FA Bn ALOC/BSOC					A					A								

(a) Most admin/log traffic is carried on ACUS.

(b) On the basis of the availability of MSE, these nets may be satisfied by MSE links with the approval of the force artillery commander.

Table I-6. FA Brigade Communications Network Matrix (DS Tactical Mission)

	INTERNAL					EXTERNAL									
	FA Bde Cmd (VHF-FM) (V)	FA Bde Ops/F 1, 2, 3, 4 (VHF-FM) (D)	FA Bde CF (MSE) (V-FAX)	FA Bde Survey (VHF-FM) (V)	FA Bde Admin/Log(a) (VHF-FM (V)	Mvr (Bde/Regt) Cmd (VHF-FM) (V)	Mvr (Bde/Regt) Ops/Intel (VHF-FM) (V)	Mvr (Bde/Regt) Fire Spt (VHF-FM) (V)	Force FA Cmd (VHF-FM) (V)	Force FA Ops/F 1, 2, 3 (VHF-FM) (D)	Force FA TA/Intel (VHF-FM) (D)	Force FA Survey (VHF-FM) (V)	Force FA Admin/Log(a) (VHF-FM) (V)	Corps Arty Cmd/ops (IHFR-AM) (V)	Force FA Cmd/F (MSE) (V-FAX)
FA Bde Cdr	X					X									
FA Bde XO	X				X										
O&I Cell	N		M			X		X	X(b)						
Targeting Element		W					X				X(b)			X	A
Fire Control Cell		N								X					
FA Bde SPCE				N								X			
FA Bde HQ Spt Sec					N								A		
LNOs	A	X						A							
Radars (attached)	X	A									X(b)				
Mvr Bde or Regt FSE		X	M					X							
Mvr Bn FSE		X						X							
COLTs (attached)		X						X							
FA Bn Cdr	X								A(b)						
FA Bn CP	X		M							A					
FA Bn RSO				X								A			
FA Bn ALOC/BSOC					A								A		

(a) Most admin/log traffic is carried on ACUS.

(b) On the basis of the availability of MSE, these nets may be satisfied by MSE links with approval of the force artillery commander.

Appendix J

Field Artillery Tactical and Digital Rehearsals

FIELD ARTILLERY TACTICAL REHEARSALS

GENERAL

J-1. Commanders who thoroughly plan rehearsals will dramatically improve their subordinates' understanding of an operation. FA tactical rehearsals should, therefore, be conducted regularly in conformance with well-written and detailed SOPs, even when planning and preparations are compressed. They should be distinctly different from preceding wargames in the COA analysis phase.

J-2. To improve combat rehearsal effectiveness, commanders must understand available rehearsal options (for details on types of rehearsals see FM 101-5). They must know the cost in time and resources, operations security (OPSEC) compromise risks, ambient light conditions, benefits in leader participation, and the resulting detailed understanding by their subordinates. To make rehearsals work to their advantage, they must train their staff in peacetime to extract each technique's maximum benefits. Waiting for actual combat operations to practice is too late.

J-3. Selected FA personnel (FA G3s/S3s, FSOs, FISTs, etc.) should, whenever feasible, also attend and participate in combined arms rehearsals. Corps arty, div arty, and FA brigade commanders also stage and execute companion FA-internal rehearsals to prepare for the effective delivery of FA fires.

FA REHEARSAL OBJECTIVES

J-4. An effective FA rehearsal should:

- Identify problems and omissions, focusing on actions and decision points critical to mission accomplishment. Key personnel must be thoroughly familiar with restrictive and permissive FSCMs, FA target lists and schedules, trigger points and events, movement/displacement plans, combat service support provisions, and C3 handover requirements.
- Confirm communications links among FA CP elements (TOC, ALOC, etc.), force CPs, sensors, and firing elements.
- Confirm availability of FA delivery units and availability and type of ammunition stocks.
- Enhance coordination, synchronization, and improve battlefield awareness to assist in the preclusion of fratricide.
- Ensure a clear understanding of ROE and procedures for clearing fires.
- Refine the plan and make necessary changes if problems are found -- do not wargame and rewrite it. Significant changes late in the preparation phase can have severe consequences for the integration and synchronization of FA contributions.

- Ensure subordinate commanders explicitly understand their mission, how their missions relate to each other, and how each mission relates to the force basic and FS plans.
- Indicate potential contingencies and conditions that might necessitate execution of branch plans.
- Determine movement and reaction times, routes and order of march for supporting FA assets in relation to maneuver operations as discussed in Chapter 3.
- Increase the confidence of subordinate leaders and soldiers.
- Provide feedback to senior commanders.

REHEARSAL PREPARATIONS

J-5. During rehearsals, the commander's role is crucial. He is the driving force in the interactive exchange of action, reaction, and counteraction that cements the plan in his subordinates' minds. He focuses his staff to create the rehearsal conditions that best replicate the future battle. Whether or not the commander (or his CofS/XO or G3/S3) conducts the rehearsal himself, the effectiveness of the rehearsal is the commander's responsibility. The FA commander and staff should begin detailed rehearsal planning as soon as the force commander approves his preferred COA.

J-6. In the first step of planning, the FA commander selects the rehearsal technique when he issues his planning guidance. This enables the staff to begin preparing the rehearsal site (selection, security, and construction, as required). As part of the FA support plan approval process, the FA commander decides whether to conduct a rehearsal that includes the entire FA support plan or one that covers only critical portions. Reducing the rehearsal to critical portions saves time but might sacrifice comprehension of the whole plan. Time will be the driving factor in the commander's final decision.

J-7. The commander next refines the time plan that the staff prepares for the execution of the mission. The time plan consists of the time-distance calculations of the unit's planned events. In an offensive operation, the time plan should begin with the first offensive action--when CPs, FA delivery units, and TA assets displace from the assembly area to conduct a passage of lines and cross the LD. In a defensive operation, the time plan begins with an H-hour time stemming from the first expected enemy event and FA actions to counter enemy offensive operations.

J-8. In the next planning step, the commander and staff develop a short list of action-reaction-counteraction events. They base this short list on their understanding of possible enemy actions projected during the wargame. This list becomes the script for the rehearsal and guides the commander through major events. Use of a decision support template, AGM and/or FA synchronization matrix helps.

J-9. The last planning step is to conduct the rehearsal. The commander or his designated representative (CofS/XO, G3/S3) plays the role of controller and commander. He arranges the action by time or event just as he would in combat. The FA intelligence officer plays the role of the enemy FA commander (actions and reactions). This allows the unit to rehearse each critical phase calling for the delivery of FA fires, practice contingencies and branch plans, and

verify planning factors. One staff member becomes the recorder to record any adjustments to the plan or unresolved questions which the rehearsal produces.

CONDUCT OF REHEARSALS

J-10. Once participants assemble at the rehearsal site, the rehearsal leader (the FA commander, CofS/XO or G3/S3) briefs them and leads the rehearsal. His briefing must include an introduction and an orientation. After the initial briefing, the rehearsal begins IAW the rehearsal plan. The FA commander, CofS/XO, or G3/S3 observes and critiques all portions of the rehearsal. Critiques center on meeting the commander's intent and coordination between units. Rehearsals continue until units are competent or the time available expires.

J-11. After the rehearsal, the commander reassembles participants to conduct an after action review (AAR). He reviews lessons learned and makes only the absolute minimum required modifications to the existing plan. (Normally, these changes are affected by issuing a FRAGO.) This meeting also allows the commander to issue any last minute instructions or reminders and to reiterate his intent. Subordinate commanders incorporate any changes the commander makes to the existing plan into their unit orders and plans. Such changes are also briefed to any key leader or unit which did not participate in the rehearsal. Changes to the plan should serve as refinements to that plan; they should not be radical or significant. Commanders must remember that the rehearsal is not a substitute for the wargame.

FIELD ARTILLERY DIGITAL REHEARSALS

LEVELS OF DIGITAL REHEARSALS

Level III Rehearsals

J-12. Level III full-scale digital dress rehearsals are conducted either in conjunction with combined arms/FA tactical rehearsals or completely separate. They involve the use in real-time of fire support platforms over actual or similar terrain. These rehearsals are generally conducted in a deliberate/hasty defense or limited offense. Level III rehearsals are resource-intensive and, although the most desirable, rarely feasible at FA brigade or battalion level. Some of the more significant benefits include:

- Database verification for FS digital systems.
- Validation of the supporting communications architecture. Mobile digital platforms spread over a geographic area present unique challenges difficult to replicate with static platforms in an assembly area.
- Verification of the maneuver terrain management plan and time-space relationships between EFATs and FA movement plans. The intent is to ensure units are in place to mass during critical periods.
- Rehearsal of triggers on the ground, both for movements and for the initiation of fires by primary and backup sensors/observers.

Level II Rehearsals

J-13. Level II digital rehearsals are conducted separate from combined arms/FA tactical rehearsals. They are conducted from actual fighting position areas, where "electronic movement" of units and icons in the AFATDS situation screen

would adversely affect the current mission. This may be a partial digital rehearsal in that only actual targets within range of friendly assets can be rehearsed and processed between AFATDS OPFACs. Targets outside the range of friendly assets cannot be processed in AFATDS, even for rehearsal purposes. For these targets, their information should be verified by "voice" (e.g., target number, grid, trigger, attack guidance, firing units, etc.).

Level I Rehearsals

J-14. Level I full digital rehearsals are conducted separate from combined arms/FA tactical rehearsals similar to a normal CP exercise from an assembly area. The database can be rehearsed completely by "electronically" moving units and icons in the AFATDS situation screen. Movement of the icons on the screen gives rehearsal participants an "electronic visualization" at how the operation will unfold and how the fire support plan will be integrated. However, before conducting this type rehearsal, units must be certain that it will not interfere with "real world" missions.

INTEGRATED DIGITAL AND TACTICAL FS/FA REHEARSALS

J-15. AFATDS offers a unique ability to merge digital and FS/FA tactical rehearsals. The following is an example of such a merger. Individual preferences should be reflected in unit SOPs emphasizing particular strengths and weaknesses.

J-16. The rehearsal net must allow all participants to eavesdrop and follow the rehearsal. Regardless of the net, the force FSC/FSE should be NCS and run the rehearsals. To provide the conceptual framework, the rehearsal should begin with a brief description of the concept of operations and supporting scheme of fires followed by an FSC/FSE phase-by-phase overview of the operation. Topics to be addressed for each phase include the following:

- Friendly/enemy actions that initiate each phase (FSC/FSE).
- Enemy situation (force artillery G2/S2). For Level I and III rehearsals, the G2/S2 moves enemy icons on the AFATDS current situation screen and sends status either to selective units or to a distribution list to update all AFATDS OPFACs.
- Concept of operations (force FSC/FSE).
- Commander's intent for fires during that phase (force FSC/FSE).
- EFSTs for that phase. (Note: EFSTs are related in time and space. Therefore, EFSTs should be discussed in relation to each other. For AFATDS purposes, EFSTs identify who has priority of fires.) Information should also include:
  - Target number and grid coordinates.
  - Purpose of the target.
  - Primary and alternate triggers to include periods of limited visibility and description of how triggers are related in time and space to the scheme of maneuver.
  - Primary and backup sensors/observers.
  - Delivery unit(s).

  - Time-space relationship between unit response time, duration of fires, and scheme of maneuver.
- After review of each EFST, missions should be processed from the sensor/observer to the delivery system level. In particular, validate the following:
  - Mission value.
  - System preferences (AFATDS selects the fire support system).
  - Delivery system attack methods (shell, fuze, unit, volleys).
  - Proper intervention points functioning.
  - Target coordination requirements.
  - Mission routing functions.
- After review of each EFST, the force artillery G3/S3 should discuss FA actions and EFATs to support each phase, to include:
  - Movements required during the phase, their triggers, and relationship in time and space with EFSTs. For Level I and III rehearsals, displacing firing units change their grid location and send status to selected units or a distribution list to update AFATDS OPFACs.
  - Logistic requirements in the phase.

DIGITAL REHEARSAL CHALLENGES

J-17. The effect of automatic data distribution during digital rehearsals is potentially far reaching. As digital systems are designed to disseminate information automatically, safeguards must be in place to separate digital rehearsals from “real world” events. In Level I and III rehearsals, AFATDS OPFACs “electronically move” unit icons in AFATDS from assembly areas or battle positions into planned battle positions to range targets for the rehearsal. (Note: To process targets in AFATDS, units must be able to range respective targets.) Preferably, rehearsal missions must be distinctly separate from “live missions.” Otherwise, digital rehearsal missions and associated “exercise” messages should not be automatically passed to addressees unless they are rehearsal participants or are aware of the rehearsal and able to differentiate between “real” and “rehearsed” information. Alternatively, non-participating net members may have to leave the net for the duration of the rehearsal.

J-18. Safeguards must also be taken to prevent live rounds from being fired at rehearsal targets while maintaining the capability to react to real threats. Units must retain the ability to terminate or postpone rehearsals instantly when a “real world” fire mission needs to be processed.

J-19. Although AFATDS permits dividing plans into distinct phases, creating and switching among multiple phases during rehearsals create the potential for introducing database errors. Therefore, phases within a plan should be kept to a minimum and created only when necessary.

Glossary

ACRONYMS AND ABBREVIATIONS

A2C2	Army airspace command and control
AAP	allied administrative publication
AAR	after action review
ABCA	Australia, Britain, Canada, America
ABCS	Army battle command system
AC	active component
ACE	analysis and control element
ACofS	assistant chief of staff
ACR	armored cavalry regiment
ACUS	area common user system
AD	air defense
ADA	air defense artillery
ADC-M	assistant division commander-maneuver
ADDS	Army data distribution system
admin-log	administration-logistic
AFATDS	advanced field artillery tactical data system
AFSC	assistant fire support coordinator (USMC)
AFSCOORD	assistant fire support coordinator
AFSO	aerial fire support observer
AGM	attack guidance matrix
ALO	air liaison officer
ALOC	administration and logistic operations center
AM	amplitude modulated
AO	area of operations
AOC	air operations center
APOD	aerial port of debarkation
ARCOM	Army command
armd	armored

ASAS	all-source analysis system
ASCC	Army service component commander
ASL	authorized stockage list
ASOC	air support operations center
ASP	ammunition supply point
ATACMS	Army tactical missile system
ATCCS	Army tactical command and control system
ATIZ	artillery target intelligence zone
atk	attack
ATP	ammunition transfer point
avn	aviation
BCD	battlefield coordination detachment
BCT	brigade combat team
BDA	battle damage assessment
BDAR	battlefield damage assessment and repair
bde	brigade
BFACS	battlefield functional area control system
BMO	battalion maintenance officer
bn	battalion
BOS	battlefield operating systems
BSA	brigade support area
BSOC	battalion support operations center
C-E	communications-electronics
C2	command and control
C3	command, control, and communications
C4I	command, control, communications, computers, and intelligence
CAS	close air support
cav	cavalry
CCIR	commander's critical information requirements
CCL	combat-configured load
CFA	covering force area
CFFZ	call-for-fire zone
CFL	coordinated fire line

CFZ	critical friendly zone
CGS	common ground station
CINC	commander in chief
cmd	command
CNR	combat net radio
COA	course of action
COC	combat operations center (USMC)
CofS	chief of staff
COLT	combat observation/lasing team
comm	communications
COMSEC	communications security
CONUS	continental United States
CONUSA	continental United States Army
corps arty	corps artillery
COSCOM	corps support command
CP	command post
CS	combat support
CSA	corps storage area
CSB	corps support battalion area
CSG	corps support group
CSH	combat support hospital
CSR	controlled supply rate
CSS	combat service support
CSSCS	combat service support control system
CTAD	corps target acquisition detachment
CTT-H	commanders tactical terminal-hybrid
D	digital
D3A	decide, detect, deliver, and assess
DAO	division ammunition officer
DBSL	deep battle synchronization line
DFSCOORD	deputy fire support coordinator
DISCOM	division support command

div	division
div arty	division artillery
DOCC	deep operations coordination cell
DODIC	Department of Defense identification code
DPICM	dual-purpose improved conventional munition
DS	direct support
DSA	division support area
DTG	date-time group
DTO	division transportation officer
EA	engagement area
EAC	echelons above corps
EBC	embedded battle command
ECCM	electronic counter-countermeasures
EEFI	essential elements of friendly information
EFAT	essential field artillery task
EFST	essential fire support task
EPLRS	enhanced position location reporting system
EPW	enemy prisoner of war
EW	electronic warfare
EWO	electronic warfare officer
FA	field artillery
FAADC3I	forward area air defense command, control, communications, and intelligence system
FAIO	field artillery intelligence officer
fax	facsimile
FBCB2	Force XXI battle command brigade and below
FCC	fire control cell
FCE	fire control element
FDC	fire direction center
FEBA	forward edge of the battle area
FED	forward entry device
FFIR	friendly force information requirements
FIST	fire support team
FLE	forward logistic element

FLOT	forward line of own troops
FM	field manual
FM	fire mission
FM	frequency modulated
FO	forward observer
FORSCOM	Forces Command
FRAGO	fragmentary order
FS	fire support
FSB	forward support battalion
FSC	fire support coordinator (USMC)
FSC	fire support cell (US Army)
FSCC	fire support coordination center (USMC)
FSCL	fire support coordination line
FSCM	fire support coordinating measure
FSCOORD	fire support coordinator
FSE	fire support element
FSHTU	fire support hand-held terminal unit
FSO	fire support officer
FST	fire support terminal
GCCS-A	global command and control system-Army
GCE	ground combat element (USMC)
GMLRS	guided multiple launch rocket system
GOCOM	general officer command
GPS	global positioning system
GRREG	graves registration
GS	general support
GSM	ground station module
GSR	general support reinforcing
HDC	headquarters and distribution company
HE	high explosive
hel	helicopter
HF	high frequency
HHB	headquarters and headquarters battery
HIMARS	high mobility artillery rocket system

HMMWV	high-mobility, multipurpose wheeled vehicle
HPT	high-payoff target
HPTL	high-payoff target list
HQ	headquarters
HUMINT	human intelligence
HVT	high-value target
IAW	in accordance with
IFSAS	initial fire support automation system
IHFR	improved high frequency radio
INS	inertial navigation system
intel	intelligence
INTSUM	intelligence summary
IO	information operations
IPB	intelligence preparation of the battlefield
JAAT	joint air attack team
JAOC	joint air operations center
JFC	joint force commander
JSEAD	joint suppression of enemy air defenses
JSTARS	joint surveillance and target attack radar system
JTCB	joint targeting coordination board
JTF	joint task force
JTIDS	joint tactical information distribution system
km	kilometer
LAN	local area network
LC	line of contact
LCU	lightweight computer unit
LD	line of departure
LDF	lightweight digital facsimile
LEN	large extension node
LNO	liaison officer
LOC	lines of communication
LOGPAC	logistics package
LOGSTAT	logistics status
LPB	logistics preparation of the battlefield

LRP	logistics release point
LSD	large screen display
MAGTF	Marine air-ground task force (USMC)
MANPADS	man-portable air defense system
MAPS	modular azimuth and positioning system
MASH	mobile Army surgical hospital
MBA	main battle area
MCOO	modified combined obstacle overlay
MCS	maneuver control system
MDMP	military decision-making process
mech	mechanized
MEDEVAC	medical evacuation
MEDSOM	medical supply, optical, and maintenance
MEF	marine expeditionary force
met	meteorology
METT-TC	mission, enemy, terrain and weather, troops and support available, time available, and civil considerations
MEU	Marine expeditionary unit (USMC)
MI	military intelligence
MLRS	multiple launch rocket system
MMC	materiel management center
MOI	message of interest
MOPP	mission oriented protective posture
MOS	military occupation specialty
MSB	main support battalion
MSD	medium screen display
MSE	mobile subscriber equipment
MSR	main supply route
MSRT	mobile subscriber radiotelephone
MST	maintenance support team
MSU	mutual support unit
MTOE	modified table of organization and equipment
NAI	named area of interest
NATO	North Atlantic Treaty Organization

NBC	nuclear, biological, and chemical
NCO	noncommissioned officer
NCS	net control station
NFL	no-fire line
NGO	nongovernmental organization
OB	order of battle
OCONUS	outside continental United States
o/o	on order
OPCON	operational control
OPFAC	operational facility
OPLAN	operation plan
OPORD	operation order
ops	operations
OPSEC	operations security
PADS	position and azimuth determining system
PAH	position area hazard
PIR	priority intelligence requirements
plt	platoon
PM	preventive maintenance
POD	port of debarkation
POE	port of embarkation
POL	petroleum, oils, and lubricants
PSYOP	psychological operations
QF	quick fire
QSTAG	quadripartite standardization agreement
R	reinforcing
RAOC	rear area operations center
RAP	rocket assisted projectile
RATT	radio teletypewriter
RAU	radio access unit
RC	reserve component
RDO	radar deployment order
recon	reconnaissance
regt	regiment

RFA	restrictive fire area
RFL	restrictive fire line
RIPL	reconnaissance and interdiction planning line
RO/RO	roll-on/roll-off
ROE	rules of engagement
ROZ	restricted operations zone
RSI	rationalization, standardization, and interoperability
RSO	reconnaissance and survey officer
RSOI	reception, staging, onward movement, and integration
RSR	required supply rate
S&S	supply and service
SBT	subscriber table
SCATMINE	scatterable mine
SCP	survey control point
SEAD	suppression of enemy air defenses
sec	section
SEN	small extension node
SIGINT	signals intelligence
SIMO	simultaneous observation
SINCGARS	single-channel ground and airborne radio system
SITTEMP	situation template
SJA	staff judge advocate
SOF	special operations forces
SOI	signal operating instructions
SOP	standing operating procedures
SP	self-propelled
SPCE	survey, planning, and coordination element
SPCO	survey, planning, and coordination officer
SPOD	seaport of debarkation
sqdn	squadron
SRP	soldier readiness processing
SSB	single side band
STANAG	standardization agreement
STARC	state area command

T	towed
TA	target acquisition
TAA	tactical assembly area
TAB	target acquisition battery
tac	tactical (command post)
TACFIRE	tactical fire direction system
TACP	tactical air control party
TACSAT	tactical satellite
TADIXS	tactical data information exchange system
TAH	target area hazard
TAI	target area of interest
TCF	tactical combat force
TCU	tactical computer unit
TIBS	tactical information broadcast service
TMD	theater missile defense
TOC	tactical operations center
TOE	table of organization and equipment
TRAP	tactical receive equipment and related applications
trig	triangulation
TRITAC	tri-services tactical
TSOP	tactical standing operating procedures
TSS	target selection standards
TTP	tactics, techniques, and procedures
TVA	target value analysis
UAV	unmanned aerial vehicle
UBL	unit basic load
UHF	ultra high frequency
UMT	unit ministry team
US	United States
USAFAS	United States Army Field Artillery School
USANCA	United States Army Nuclear and Chemical Agency
USARC	United States Army Reserve Command
USMC	United States Marine Corps
USTRANSCOM	United States Transportation Command

UTM	universal transverse mercator
V	voice
VHF	very high frequency
WARNO	warning order
WLR	weapons locating radar
XO	executive officer

Bibliography

SOURCES USED

Joint Publications

Joint Pub 1-02. *DOD Dictionary of Military and Associated Terms.* 29 June 1999. As amended through 1 September 2000.

Joint Pub 3-0. *Doctrine for Joint Operations.* 1 February 1995

Joint Pub 3-09. *Doctrine for Joint Fire Support.* 12 May 1998.

Army Publications

FM 3-100.2 (100-103-1). *Multiservice Procedures for Integrated Combat Airspace Command and Control.* 30 June 2000.

FM 6-2. *Tactics, Techniques, and Procedures for Field Artillery Survey.* 23 September 1993. Change 1. 16 October 1996.

FM 6-15. *Tactics, Techniques, and Procedures for Field Artillery Meteorology.* 17 August 1997.

FM 6-20-1. *Tactics, Techniques, and Procedures for the Field Artillery Cannon Battalion.* 29 November 1990.

FM 6-20-10. *Tactics, Techniques, and Procedures for The Targeting Process.* 8 May 1996.

FM 6-60. *Tactics, Techniques, and Procedures for Multiple Launch Rocket System (MLRS) Operations.* 23 April 1996.

FM 6-121. *Tactics, Techniques, and Procedures for Field Artillery Target Acquisition.* 25 September 1990.

FM 8-10. *Health Services Support in a Theater of Operations.* 1 March 1991.

FM 25-50. *Corps and Division Nuclear Training.* 30 September 1991.

FM 25-51. *Battalion Task Force Nuclear Training.* 16 June 1991.

FM 34-130. *Intelligence Preparation of the Battlefield.* 8 July 1994.

FM 54-30. *Corps Support Groups.* 17 June 1993.

FM 71-100. *Division Operations.* 28 August 1996.

FM 100-5. *Operations.* 14 June 1993.

FM 100-7. *Decisive Force: The Army in Theater Operations.* 31 May 1995.

FM 100-9. *Reconstitution.* 13 January 1992.

FM 100-10. *Combat Service Support.* 3 October 1995.

FM 100-15. *Corps Operations.* 29 October 1996.

FM 100-17-4. *Deployment. Draft-to be published.*

FM 100-22. *Installation Management.* 11 October 1994.

FM 100-30. *Nuclear Operations.* 29 October 1996.

FM 101-5. *Staff Organization and Operations.* 31 May 1997.

Allied Publications

AAP-6. *NATO Glossary of Terms and Definitions.* November 1997.

QSTAG 538. *Recognition and Identification of Forces on the Battlefield.* 15 January 1981.

STANAG 2934. *Artillery Procedures.* 3 July 1996.

STANAG 2129. *Identification of Land Forces on the Battlefield.* 27 June 1997.

STANAG 2101/QSTAG 533. *Principles and Procedures for Establishing Liaison.* 26 April 1996/24 March 1980.

DOCUMENTS NEEDED
Army Publications

DA Form 2028. *Recommended Changes to Publications and Blank Forms.* February 1974.

DA Form 4655-R. *Target List Worksheet.* January 1983.

DA Form 4656-R. *Scheduling Worksheet.* January 1983.

DA Form 5368. *Quick Fire Plan.* December 1984.

DA Form 5957-R. *Radar Deployment Order.* September 1990.

FM 3-3. *Chemical and Biological Contamination Avoidance.* 16 November 1992. Change 1. 29 September 1994.

FM 3-3-1. *Nuclear Contamination Avoidance.* 9 September 1994.

FM 3-100. *Chemical Operations Principles and Fundamentals.* 8 May 1996.

FM 5-103. *Survivability.* 10 June 1985.

FM 6-20. *Doctrine for Fire Support.* To be published.

FM 6-20-30. *Tactics, Techniques and Procedures for Fire Support for Division Operations.* Draft-to be published.*

FM 6-20-40. *Tactics, Techniques and Procedures for Fire Support for Brigade Operations.* Draft-to be published.*

FM 6-20-60. *Tactics, Techniques and Procedures for Fire Support for Corps Operations.* To be published.

FM 101-5-1. *Operational Terms and Graphics.* 30 September 1997.

FM 101-10-1/2. *Staff Officers Field Manual - Organizational, Technical, and Logistical Data Planning Factors (Volume 2).* 17 July 1990.

READINGS RECOMMENDED

Army Publications

AR 310-25. *Dictionary of United States Army Terms.* 15 October 1983.

AR 310-50. *Authorized Abbreviations, Brevity Codes, and Acronyms.* 15 November 1985.

ARTEP 6-102-MTP. *Mission Training Plan for Corps Artillery, Division Artillery, and Field Artillery Brigade Command and Staff Group, and Headquarters and Headquarters Battery.* 1 April 2000.

DA Pam 25-30. *Consolidated Index of Army Publications and Blank Forms.* Electronic version only-no printed copies exist.

FM 9-6. *Munitions Support in the Theater of Operations.* 20 March 1998.

FM 10-13. *Supply and Services Reference Data.* 21 October 1986.

FM 20-3. *Camouflage, Concealment, and Decoys.* 30 August 1999.

FM 55-15. *Transportation Reference Data.* 27 October 1997.

FM 55-30. *Army Motor Transport Units and Operations.* 27 June 1997. Change 1. 15 September 1999.

FM 71-100-1. *Armor and Mechanized Division Operations Tactics, Techniques, and Procedures.* 1 May 1991

FM 71-100-2. *Infantry Division Operations Tactics, Techniques, and Procedures.* 31 August 1993.

FM 71-100-3. *Air Assault Division Operations Tactics, Techniques, and Procedures.* 29 October 1996.

FM 90-4. *Air Assault Operations.* 16 March 1987.

FM 90-13. *River Crossing Operations.* 26 January 1998.

FM 90-14. *Rear Battle.* 19 June 1985.

TB 55-46-1. *Standard Characteristics for Transportation of Military Vehicles and Other Oversize/Overweight Equipment.*

Allied Publications

STANAG 2014/QSTAG 506. *Operation Orders, Warning Orders, and Administrative/Logistics Orders.* 26 May 1998/7 August 1984.

STANAG 2083. *Commanders' Guide on Nuclear Radiation Exposure of Groups.* 24 June 1994.

STANAG 2103/QSTAG 187. *Reporting Nuclear Detonations, Biological, and Chemical Attacks, and Predicting and Warning of Associated Hazards and Hazard Areas.* 7 September 1995/21 May 1998.

STANAG 2104/QSTAG 189. *Friendly Nuclear Strike Warning.* 28 June 1995/August 1991.

*The draft publications are not available through the US Army Adjutant General Publication Center. They can be accessed via the Internet on the USAFAS

Warfighting Integration and Development Directorate doctrine page (http://155.219.39.98/doctrine/wddfrm.htm).

Index

A

ABCA, 1-6

advanced field artillery tactical data system (AFATDS), G-12 - G-16, I-5 - I-6

administration and logistic

fire support plan tab, G-28 - G-37

operations center (ALOC), 4-11 - 4-12

air assault division, 2-3 - 2-4

airborne division, 2-3 - 2-4

alternate command post, 6-56

alternate operations center, 1-10, 1-12, 1-13, 1-14

area common user system (ACUS), I-3 - I-4, I-8 - I-9, I-12 - I-13, I-14

area of interest, 6-7, 6-13, 6-22, 6-23, 6-24

area of operations (AO), 1-8, 6-2, 6-7, 6-12, 6-13, 6-22, 6-23, 6-25, 6-26, 6-29, 6-35, 6-55

armored div arty, 2-2 - 2-3

army battle command system (ABCS), I-1 - I -2

army data distribution system (ADDS), I-4

Army tactical missile system (ATACMS) deconfliction, 6-42

attack, 3-2 - 3-3, 6-54

attack guidance, 6-1, 6-3, 6-5, 6-8, 6-10, 6-12, 6-14, 6-15, 6-17, 6-20, 6-30, 6-33, 6-35, 6-41

attack guidance matrix (AGM), 6-4, 6-5, 6-6, 6-10, 6-17, 6-18, 6-19, 6-20, 6-51

B

battle damage assessment (BDA), 6-4, 6-5, 6-6, 6-10, 6-16, 6-18, 6-20, 6-21, 6-34, 6-56

battlefield coordination detachment (BCD), 4-22

broadcast systems, I-4

C

chemical weapons, 1-10

clearance of fires, 6-40 - 6-42

close area operations, 1-5, 1-9 - 1-10, 1-14

combat net radio (CNR), I-2 - I-3

combat service support (CSS), 5-1 - 5-22, 6-42 - 6-47, A-4 - A-5

arming, 5-2 - 5-6

characteristics, 5-1 - 5-2

defensive operations, 5-20

defensive planning considerations, 6-46

Class V resupply, 5-5, 5-6, 6-47

functions, 5-2 - 5-18

fixing, 5-8 - 5-11

fueling, 5-6 - 5-8

heavy-light-heavy force mixes, 6-46 - 6-47

infrastructure, 5-18 -5-19

moving, 5-11 - 5-12

offensive operations, 5-20

offensive planning considerations, 6-44 - 6-46

planning procedures, 6-42 - 6-48

reconstitution, 5-17

regeneration, 5-18

reorganization, 5-17

stability operations, 5-20 - 5-21

supply, medical operations, and field services, 5-13 - 5-17

support operations, 5-21 - 5-22

sustaining the force, 5-12 - 5-13

combined operations, A-1 - A-6

command, control, and communications structure, I-1 - I-17

command group, 4-2 - 4-3

command post (CP), 4-1 - 4-23, 6-56

alternate, 6-56

corps arty operations, 1-10, 4-12 - 4-15

displacements, 6-56

div arty, 4-16 - 4-19, 4-21 - 4-22

FA brigade, 4-19 - 4-21

information management, 4-1, 4-2

locations and operations, 4-4, 4-5

organizations, 4-4

command post and unit positioning and displacements, 3-12, 6-31 - 6-33

command relationships, 1-6 - 1-7, B-1

fundamentals, 1-7, C-1 - C-5

commander, 4-2, 4-3, 4-5

commander's intent, 6-1, 6-2, 6-3, 6-4, 6-7, 6-12, 6-14, 6-15, 6-20, 6-24, 6-39, 6-43, 6-54

commander's tactical terminal-hybrid (CTT-H), I-6

commanders and staff, 4-2 - 4-3, 4-5 - 4-12

communications, 3-6, 4-10 - 4-11, 6-36, 6-38 - 6-39, A-1 - A-2, I-7 - I-17

corps arty, I-7 - I-9

div arty, 6-39, I-9 - I-13

FA brigade, I-13 - I-17

concept of fires, 6-4, 6-6, 6-10, 6-13, 6-16

corps artillery (corps arty),1-3, 1-8 - 1-10, 2-1, 2-7 - 2-8, 4-12 - 4-15, 5-18, 6-33, 6-36, 6-38, E-1 - E-3, I-7 - I-9

ALOC, 4-15

communications, 6-36, 6-38, I-7 - I-9
counterfire, 6-34 - 6-36
CSS, 5-18
HHB, E-1 - E-3
TOC, 4-12 - 4-14
targeting, 6-33
counterfire, 1-9, 1-11 - 1-12, 1-14, 3-13 - 3-15, 6-1, 6-3, 6-5, 6-6, 6-8, 6-9, 6-14, 6-27, 6-31, 6-34 - 6-36, 6-49, 6-51, 6-55
course of action (COA), 6-2, 6-3 - 6-5, 6-8, 6-10, 6-11, 6-15, 6-16, 6-17, 6-18
analysis, 6-4 - 6-5, 6-10, 6-16 - 6-17
approval, 6-5, 6-10 - 6-11, 6-18
comparison, 6-5, 6-10, 6-17
development, 6-3, 6-9 - 6-10, 6-15 - 6-16
wargaming, 6-4 - 6-5, 6-10, 6-16 - 6-17

D

deep area operations, 1-4 - 1-5, 3-15 - 3-16
deep operations coordination cell (DOCC), 1-3, 4-22 - 4-23
defense, 3-8 - 3-13
division artillery (div arty)1-3 - 1-4, 1-11 - 1-12, 2-1 - 2-4, 2-7 - 2-8, 4-16 - 4-19, 6-39, E-3 - E-6, I-9 - I-13
communications, I-9 - I-13
HHB, E-3 - E-6
TOC, 4-16 - 4-19
doctrinal template, 6-2, 6-3, 6-13, 6-15, 6-23, 6-25, 6-51

E

encirclements, 3-20 - 3-21
essential field artillery task (EFAT), 1-8, 6-9, 6-13, 6-17, 6-53, J-3, J-5
essential fire support task (EFST), 1-3, 6-4, 6-5, 6-13, 6-14, 6-16, 6-17, 6-18, 6-20, J-4, J-5
estimates, 6-24 - 6-29
commander's and staff, 6-24 - 6-29
FA commander's, 6-25
intelligence, 6-25
logistic, 6-27 - 6-28
operations, 6-26 - 6-27
personnel, 6-28 - 6-29

F

field artillery (FA)
brigade, 1-4, 1-12 - 1-13, 2-4 - 2-5, 4-19 - 4-21, 5-18 - 5-19, 6-36, 6-38, E-6 - E-8, I-13 - I-17
communications, 6-36, 6-38, I-13 - I-17
CSS, 5-18 - 5-19
HHB, E-6 - E-8
TOC, 4-19 - 4-21
capabilities, 1-4 - 1-6
command post, 1-10, 3-12, 4-1 - 4-23, 6-31 - 6-33, 6-56
commander, 1-1, 1-2, 1-3, 1-4, 4-2 - 4-3, 6-25
communications, 3-6, 4-10 - 4-11, 6-36, 6-38 - 6-39, A-1 - A-2, I-7 - I-17
corps arty, 1-3 - 1-4, 1-8 - 1-10, 2-1, 2-7 - 2-8, 4-12 - 4-15, 5-18, 6-33, 6-36, 6-38, E-1 - E-3, I-7 - I-9
counterfire, 1-9, 1-11 - 1-12, 1-14, 3-13 - 3-15, 6-1, 6-3, 6-5, 6-6, 6-8, 6-9, 6-14, 6-27, 6-31, 6-34 - 6-36, 6-49, 6-51, 6-55
covering force, 3-10 - 3-11
digital rehearsal, 6-53, J-3 - J-5
displacements, 3-6, 3-12
div arty, 1-3 - 1-4, 1-11 - 1-12, 2-1 - 2-4, 2-7 - 2-8, 4-16 - 4-19, 6-39, E-3 - E-6, I-9 - I-13
doctrinal template, 6-2, 6-3, 6-13, 6-15, 6-23, 6-25, 6-51
force artillery HQ, 1-2 - 1-3
headquarters and headquarters batteries, 2-1 - 2-6, E-1 - E-11
information management, 4-1 - 4-2
intelligence officer, 2-7, 6-2, 6-13, 6-19, 6-22, 6-33, 6-51, 6-54
main battle area, 3-11 - 3-12
mission, 1-1 - 1-2
mission planning, preparation, and execution, 6-1 - 6-56
order of battle (OB), 4-16, 4-17, 4-19, 4-20, 6-2, 6-3, 6-8, 6-13, 6-15, 6-23, 6-25, 6-51
organization for combat, 1-6 - 1-7, 3-10 - 3-12, 6-30 - 6-31, C-1 - C-5
organizations, 2-1 - 2-6
positioning, 3-5 - 3-6, 3-12, 3-17
raids, 3-3, 3-5, 3-24
rear area fires, 1-5, 1-9 - 1-10, 1-12, 1-13, 1-14, 3-16 - 3-17
relationships and interfaces with external agencies, 4-21 - 4-23
roles, 1-2 - 1-4
senior FA commander, 1-2 - 1-4
staff, 4-3, 4-7 - 4-9
support plan, G-1 - G-38
administrative-logistics tab, G-28 - G-37
AFATDS (or IFSAS) tab, G-12 - G-16
artillery intelligence tab, G-25 - G-27
format, G-1
meteorology tab, G-22 - G-24
outline, G-2 - G-8
standards, G-1 - G-2
survey tab, G-9 - G-11
synchronization matrix tab, G-38
target acquisition tab, G-17 - G-21
tactical missions, 1-3, 1-7, 1-13, 2-4, 3-4, 3-11, 3-12, 3-17, 5-19, 6-4, 6-5, 6-9, 6-10, 6-13, 6-18, 6-30, 6-31, 6-42, 6-43, 6-44, 6-55, A-3, A-4, C-2, C-3, C-4, D-1 - D-2, F-2, G-4, G-38, I-9, I-13, I-15, I-16, I-17
tactics and techniques, 3-1 - 3-25

target acquisition assets, 2-7 - 2-8
tasks and responsibilities, 1-8 - 1-14
fire control cells, 4-13 - 4-14
fire control element, 4-16, 4-19 - 4-20
fire planning and direction systems, I-5 - I-6
fire support, 1-1 - 1-2, 4-21 - 4-22
cells, 1-3, 4-21
close air support (CAS), 1-10, 1-12
coordinating measure (FSCM), 6-2, 6-4, 6-6, 6-10, 6-12, 6-16, 6-17, 6-18, 6-20, 6-21, 6-37, 6-40, 6-41, 6-41, 6-51, 6-55
coordinator (role of), 1-3
element (FSE), 1-3, 1-6, 1-7, 1-9, 1-11, 1-12, 4-21 - 4-22
estimate,6-2, 6-3, 6-12, 6-13, 6-14, 6-16, 6-17, 6-24
joint, 1-6
plan, 1-2, 1-3, 1-7, 1-8 - 1-9, 1-11, 6-1, 6-5, 6-6, 6-11, 6-18, 6-19, 6-20, 6-24, 6-26, 6-30
survivability, 6-2, 6-14
tasks, 6-13
fires
defensive operations, 3-8 - 3-13
fratricide prevention and clearance of fires, 6-39 - 6-42
offensive operations, 3-1 - 3-8
other operations, 3-13 - 3-24
stability operations and support operations, 3-24 - 3-25
force commander
intent, 6-1, 6-2, 6-3, 6-4, 6-7, 6-12, 6-13, 6-14, 6-15, 6-20, 6-24, 6-39, 6-43, 6-53, 6-54
planning guidance, 6-2 - 6-3, 6-8, 6-9, 6-14, 6-15, 6-25, 6-43
force FA HQ, 1-2 - 1-3
force fire support cells/elements, 4-21 - 4-22
force projection operations, 6-29 - 6-30, H-1 - H-5
force protection, 6-51 -6-52
fratricide prevention, 6-39 - 6-40

G

global positioning system (GPS), 3-7, 3-8, I-5
guidance for fires, 6-2, 6-14, 6-24

H

headquarters and headquarters battery (HHB), 2-1 - 2-6, E-1 - E-11
corps arty, 2-1 - 2-2, E-1 - E-3
div arty, 2-2 - 2-4, E-3 - E-6
FA brigade, 2-4 - 2-5, E-6 - E-8
USMC artillery regt, 2-5 - 2-6, E-8 - E-11

I

information management, 4-1 - 4-2, 6-54 - 6-55
initial fire support automation system, I-6
intelligence, 1-8, 2-7, 4-8, 4-16 - 4-17, 6-2, 6-3, 6-4, 6-6, 6-8, 6-13, 6-14, 6-15, 6-18, 6-19, 6-22 - 6-24, 6-25, 6-33, 6-34, 6-35, 6-36, 6-41, 6-43, 6-52, 6-54, 6-55, G-25 - G-27
fire support plan tab, G-25 - G-27
force structure, 2-7
preparation of the battlefield (IPB), 1-8, 6-2, 6-3, 6-7, 6-8, 6-9, 6-12, 6-13, 6-14, 6-15, 6-19, 6-22 - 6-24, 6-25, 6-27, 6-28, 6-29, 6-30, 6-31, 6-35, 6-43, 6-44, 6-51
interoperability, 1-6, A-1 - A-6

J

joint air attack team (JAAT), 1-5
joint fire support capabilities, 1-6
joint suppression of enemy air defenses (JSEAD), 1-8, 6-5, 6-6
joint targeting coordination board (JTCB), 4-22

L

liaison, F-1 - F-3
operations, 4-10
sections, 4-15, 4-20
light infantry div arty, 2-3 - 2-4
logistics, 4-11 - 4-12, 4-15, 5-1 - 5-22, 6-27 - 6-28, 6-42 - 6-48, 6-52, 6-55, G-28 - G-37
estimate, 6-27 - 6-28
preparation of the battlefield, 6-43 - 6-44, 6-52

M

mechanized div arty, 2-2
meteorology, 3-13, 4-18, 4-20, 6-48, G-22 - G-24
military decision-making process (MDMP), 6-1
force-FA CP interfaces, 6-12 - 6-21
mission, 1-1 - 1-2, A-3, A-4
analysis, 6-2 - 6-3, 6-8 - 6-9, 6-12 - 6-15
execution, 6-20 - 6-21, 6-54 - 6-56
planning, 6-12 - 6-18
preparation, 6-19 - 6-20, 6-50 - 6-54
on order (o/o), F-2
receipt, 6-2, 6-7 - 6-8
mobile subscriber equipment (MSE), I-3 - I -4

N

North Atlantic Treaty Organization (NATO), 1-6
nuclear fires, 1-10

O

offense, 3-1 - 3-8
operations
air assault, 3-5
allied, 1-6
attack, 3-2 - 3-3, 6-55
close area, 1-5, 1-9 - 1-10, 1-14
combined, A-1 - A-6
corps arty CP, 4-12 - 4-15, E-1 - E-3
counterfire, 1-9, 1-11 - 1-12, 1-14, 3-13 - 3-15, 6-1, 6-3, 6-5, 6-6, 6-8, 6-9, 6-14, 6-27, 6-31, 6-34 - 6-36, 6-49, 6-51, 6-55

decisive, 1-9, 1-12, 1-13
defensive combat, 3-8 - 3-13
deep area, 1-4 - 1-5, 1-8, 1-13, 3-15 - 3-16
deliberate entry, H-3
div arty CP, 4-16 - 4-19, E-3 - E-6
encirclements, 3-20 - 3-21
element, 4-16, 4-19
estimate, 6-26 - 6-27
exploitations and pursuits, 3-5
FA brigade CP, 4-19 - 4-21, E-6 - E-8
forced entry, H-4
force projection, 6-29 - 6-30, H-1 - H-5
infiltrations, 3-19
liaison, 4-10, 4-15, 4-20, F-1 - F-3
meteorological, 3-13, 4-18, 4-21, 6-48, G-22 - G-24
offensive combat, 3-1 - 3-8
other, 3-13 - 3-23
passage of lines, 3-22 - 3-23
raids, 3-3, 3-5, 3-24
rear area, 1-5, 1-9 - 1-10, 1-12, 1-13, 1-14, 3-16 - 3-17, 6-3
retrograde, 3-19 - 3-20
river crossings, 3-20
search and attack, 3-3
shaping, 1-8, 1-11
stability operations and support operations, 3-23 - 3-25
survey, 3-7 - 3-8, 3-13, 4-14, 4-17 - 4-18, 4-20, 6-48, G-9 - G-11
target acquisition (TA) 1-1, 2-6, 2-7 - 2-8, 3-7, 3-10, 3-11, 3-12 - 3-13, 3-14, 3-15, 3-25, 4-7, 4-8, 4-13, 4-14, 4-16, 4-17, 4-19, 4-20, 6-3, 6-4, 6-6, 6-8, 6-9, 6-10, 6-11, 6-12, 6-13, 6-15, 6-17, 6-19, 6-20, 6-21, 6-22, 6-24, 6-26, 6-27, 6-34, 6-36, 6-49, 6-51, G-17 - G-21

operations and intelligence cell, 4-12 - 4-13
organization for combat, 1-6 - 1-7, 3-4 -3-5, 3-10 - 3-12, 3-17, 6-30 - 6-31, C-1 - C-5

P

passage of lines, 3-22 - 3-23
personnel
estimate, 6-28 - 6-29
functions and responsibilities, 4-5 - 4-12
planning
COA development 6-2, 6-3 - 6-5, 6-9 - 6-11, 6-15, 6-16, 6-17, 6-18
considerations, 6-22 - 6-50
FA support plan preparation, 6-11, 6-18
force headquarters, 6-1 - 6-6
guidance, 6-2 - 6-3, 6-14, 6-15, 6-18
mission analysis, 6-2 - 6-3, 6-8 - 6-9, 6-12 - 6-15
OPLAN/OPORD/ FS plan production, 6-5 - 6-6, 6-18 - 6-21
parallel, 6-2
steps and outputs, 6-2 - 6-21
plans cell, 4-14
positioning, 3-5 - 3-6, 3-12, 3-17

R

radars, 2-7 - 2-8, 6-49
raids, 3-3, 3-5, 3-24
rear area fires, 1-5, 1-9 - 1-10, 1-12, 1-13, 1-14, 3-16 - 3-17
rear area security, 1-10, 3-16, 3-17
rear area operations, 1-5, 1-9 - 1-10, 1-12, 1-13, 1-14, 3-16 - 3-17, 6-3
rehearsals, 6-53, J-1 - J-5
backbriefs, 6-53 - 6-54
digital, 6-53, J-3 - J-5
tactical, 6-53, J-1 - J-3
retrograde, 3-19 - 3-20
river crossings, 3-20

S

signal officer/communications platoon, 4-10 - 4-11, 4-18
stability operations and support operations, 3-23 - 3-25
support of exploitation and pursuits, 3-5
support of security forces, 3-4 - 3-5, 3-9 - 3-10
support plan, 1-8, 1-11, 6-3, 6-5, 6-6, 6-7, 6-10, 6-11, 6-18, 6-19, 6-20, 6-23, 6-24, 6-27, 6-34, 6-37, 6-42, 6-43, 6-46, 6-50, 6-51, 6-54, G-1 - G-38
administrative-logistics tab, G-28 - G-37
AFATDS (or IFSAS) tab, G-12 - G-16
artillery intelligence tab, G-25 - G-27
format, G-1
meteorology tab, G-22 - G-24
outline, G-2 - G-8
standards, G-1 - G-2
survey tab, G-9 - G-11
synchronization matrix tab, G-38
target acquisition tab, G-17 - G-21

suppression of enemy air defense (SEAD), 1-5, 1-9, 1-11, 1-13, 3-17 - 3-18, 6-3, 6-8, 6-9, 6-14
survey, 3-7 - 3-8, 3-13, 4-14, 4-17 - 4-18, 4-20, 6-48, G-9 - G-11
synchronization matrix tab, G-38

T

tactical combat force (TCF), 1-5, 1-10, 1-12, 3-16, 3-17
tactical missions, 1-3, 1-7, 1-13, 2-4, 3-4, 3-11, 3-12, 3-17, 5-19, 6-4, 6-5, 6-9, 6-10, 6-13, 6-18, 6-30, 6-31, 6-42, 6-43, 6-44, 6-55, A-3, A-4, C-2, C-3, C-4, D-1 - D-2, F-2, G-4, G-38, I-9, I-13, I-15, I-16, I-17
tactical operations center (TOC), 1-12, 4-9 - 4-11, 4-12 - 4-14, 4-16 - 4-19, 4-19 - 4-21
tactical rehearsal, 6-53, J-1 - J-3

tactical satellite (TACSAT), I-9, I-12

tactics and techniques, 3-1 - 3-25

target acquisition (TA) 1-1, 2-6, 2-7 - 2-8, 3-7, 3-10, 3-11, 3-12 - 3-13, 3-14, 3-15, 3-25, 4-7, 4-8, 4-13, 4-14, 4-16, 4-17, 4-19, 4-20, 6-3, 6-4, 6-6, 6-8, 6-9, 6-10, 6-11, 6-12, 6-13, 6-15, 6-17, 6-19, 6-20, 6-21, 6-22, 6-24, 6-26, 6-27, 6-34, 6-36, 6-49, 6-51, G-17 - G-21

target attack, 6-55

target selection standards (TSS), 4-13, 6-2, 6-3, 6-4, 6-5, 6-6, 6-8, 6-10, 6-13, 6-17, 6-18, 6-20, 6-34, 6-52

target tracking, 6-52

target value analysis (TVA) 4-13, 6-2, 6-4, 6-8, 6-9, 6-10, 6-13, 6-14, 6-16, 6-17, 6-27

targeting,

corps arty, 6-33

div arty and FA brigade, 6-33 - 6-34

element, 4-16 - 4-17, 4-20

force HQ, 6-33

objectives, 6-1, 6-3, 6-4, 6-12, 6-14, 6-21, 6-56

products, 6-6, 6-19

team, 6-2, 6-3, 6-4, 6-5, 6-8, 6-12, 6-17, 6-22, 6-23, 6-33, 6-34

theater missile defense (TMD), 1-8

U

United States Marine Corps

artillery regiment, 1-13 - 1-14, 2-5 - 2-6, E-8 - E-11

V

validity checks, 6-19, 6-50 - 6-51

W

warning order (WARNO), 4-7, 6-2, 6-3, 6-5, 6-7, 6-8, 6-9, 6-10, 6-12, 6-15, 6-18, 6-50, 6-54

wire, 4-7, A-2, I-9, I-12, I-14

FM 3-09.22 (FM 6-20-2)
2 MARCH 2001

By Order of the Secretary of the Army:

ERIC K. SHINSEKI
General, United States Army
Chief of Staff

Official:

JOEL B. HUDSON
Administrative Assistant to the
Secretary of the Army
0112801

DISTRIBUTION:

Active Army, Army National Guard, and US Army Reserve: To be distributed in accordance with the initial distribution number 110773, requirements for FM 3-09.22.