Headquarters,
Department of the Army

FIELD MANUAL
24-24

Signal Data References: Signal Equipment

FIELD MANUAL
NO. 24-24

HEADQUARTERS
DEPARTMENT OF THE ARMY
Washington, DC, 29 December 1994

SIGNAL DATA REFERENCES: SIGNAL EQUIPMENT

Contents

	Page
Preface	xii
Chapter 1 Telephone Equipment	1-1
Section I. Telephones	1-2
TA-1/PT Telephone Set	1-2
TA-236/FT Telephone Set	1-4
TA-312/PT and TA-43/PT Telephone Sets	1-6
TA-341/TT Telephone Set	1-8
TA-838/TT Telephone Set	1-10
TA-938/G Telephone Set	1-12
TA-954/TT Digital Nonsecure Voice Terminal	1-14
TSEC/KY-68 Digital Subscriber Voice Terminal	1-16
TA-1035/U Digital Nonsecure Voice Terminal	1-18
TA-1042A/U Digital Nonsecure Voice Terminal	1-20
Section II. Switchboards	1-22
SB-22/PT and SB-22A/PT Manual Telephone Switchboards	1-22
SB-3614(V)/TT and SB-3614A(V)/TT Telephone Switchboards	1-24
Section III. Auxiliary Telephone Equipment	1-27
CV-1918A(V)/G Telephone Signal Converter	1-27
J-1077A/U and J-2317A/U Signal Distribution Panels	1-29
TA-248/TT Static Ringing Generator	1-31
TM-184 Terminal Strip and TA-125/GT Terminal Box	1-33

Distribution Restriction: Approved for public release; distribution is unlimited.

***This publication supersedes TC 24-24, 3 October 1988.**

Page

Chapter 2 Telecommunications Equipment 2-1

Section I. Teletypewriter Equipment 2-2

AN/UGC-74A(V)3 Communications Terminal 2-2
AN/UGC-144 Communications Terminal 2-4
MOD-40/8B Data Terminal 2-7

Section II. Facsimile Equipment and Tactical Computer Systems 2-9

AN/GXC-7A Tactical Facsimile Set 2-9
AN/UXC-7 Tactical Digital Facsimile Set 2-11

Section III. Computer Equipment 2-13

AN/TYQ-33(V) Tactical Army Combat Service Support Computer System 2-13
AN/UYQ-43(V)1 and AN/UYQ-43(V)2 Tactical Computer Processor 2-16

Chapter 3 Multiplex Equipment 3-1

Section I. Time Division Multiplexing Equipment 3-2

AN/FCC-98(V) Multiplexer Set 3-2
MD-1023( )/G Low Speed Cable Driver Modem 3-5
MD-1024( )/G High Speed Cable Driver Modem 3-7
MD-1025( )/G Remote Loop Group Multiplexer/Cable Driver Modem 3-9
MD-1026( )(P)/G Digital Data Group Modem 3-11
MD-1065( )(P)/G (103 Modem) Digital Data Modem 3-13
TD-202/U Multiplexer 3-15
TD-204/U and TD-754/G Multiplexers 3-17
TD-660/G, TD-660A/G and TD-660B/G Multiplexers 3-19
TD-976/G Asynchronous Digital Combiner 3-21
TD-1065/G High Speed Serial Data Buffer 3-23
TD-1069/G Multiplexer 3-25
TD-1233( )/TTC Remote Loop Group Multiplexer 3-27
TD-1234( )/TTC Remote Multiplexer Combiner 3-29
TD-1235( )/TTC Loop Group Multiplexer 3-31
TD-1236( )/G Trunk Group Multiplexer 3-33
TD-1237( )/G Master Group Multiplexer 3-35
TD-1337(V)/G Multiplexer/Demultiplexer 3-37

Page

Section II. Auxiliary Multiplex Equipment 3-39

AN/PTM-7 Telephone Test Set with CX-11230/G or CX-4245/G Special Purpose Electrical Cable and TD-206B/G Pulse Form Restorer 3-39
CV-1548/G and CV-1548A/G Telephone Signal Converters 3-41
TS-3647( )/G Telephone Test Set Cable Orderwire Unit with TD-1218( )/G Pulse Form Restorer (Low Speed) and TD-1219( )/G Pulse Form Restorer (High Speed) 3-43

Chapter 4 Single-Channel Radios 4-1

Section I. Frequency Modulated Radio Sets 4-2

AN/PRC-25 Radio Set 4-2
AN/PRC-77 Radio Set 4-4
AN/VRC-12 Series Radio Sets 4-6
AN/VRC-53, AN/VRC-64, AN/GRC-125, and AN/GRC-160 Radio Sets 4-10
AN/PRC-119(V)1, AN/VRC-87(V)2, AN/VRC-88(V)3, AN/VRC-89(V)4, AN/VRC-90(V)5, AN/VRC-91(V)6, AN/VRC-92(V)7 SINCGARS Radio Sets 4-12

Section II. Amplitude Modulated Radio Sets 4-14

AN/GRC-106 and AN/GRC-106A Radio Sets 4-14
AN/GRC-109 Radio Set 4-16
AN/GRC-193 High Frequency Radio Set 4-18
AN/GRC-213 High Frequency Radio Set 4-20
AN/PRC-41 and AN/PRC-41A Radio Sets 4-22
AN/PRC-47 Radio Set 4-24
AN/PRC-74 Radio Set 4-26
AN/PRC-104A High Frequency Radio Set 4-28
AN/PRC-112 Multi-Transmission Transceiver 4-30
AN/PRC-112A(C) Multi-Transmission Radio with Embedded Communications Security 4-32
AN/TRC-133A Radio Terminal Set 4-34
AN/TRQ-35(V) Tactical Frequency Sounding System 4-36
AN/VRC-24A and AN/TRC-68A Radio Sets 4-38

Section III. Auxiliary Radio Equipment 4-40

AB-903/G Mast 4-40
AN/GRA-6 Receiver-Transmitter Control Group 4-42
AN/GRA-39, AN/GRA-39A, and AN/GRA-39B Radio Set Control Groups 4-44

	Page
AN/GRA-50 Antenna Group	4-46
AN/GRA-71 Coder-Burst Transmission Group	4-47
AN/GSA-7 Radio Set Control	4-48
AT-784/PRC Loop Antenna	4-50
AT-984A/G Long-Wire Antenna	4-52
C-6709/G Control, Radio Set	4-53
KY-90 Secure Digital Net Radio Interface Unit	4-54
OE-254( )/GRC Antenna Group	4-55
OE-303 Half-Rhombic Very High Frequency Antenna	4-57
RC-292 Antenna Equipment	4-59
Chapter 5 Multichannel Radio Equipment	5-1
AN/GRC-103(V) Radio Set	5-2
AN/GRC-143 Radio Set	5-4
AN/GRC-144 Radio Set	5-6
AN/GRC-163 Radio Terminal Set	5-8
AN/GRC-222 Radio Set	5-10
Chapter 6 Shelter Configurations	6-1
Section I. Switch	6-4
AN/TTC-39A(V)1 Automatic Telephone Central Office	6-4
AN/TTC-39D Automatic Telephone Central Office	6-7
AN/TTC-41( ) Automatic Telephone Central Office	6-10
AN/TYC-39(V) Automatic Message Switch	6-13
Section II. Teletypewriter	6-18
AN/MSC-29 and AN/MSC-29A Telegraph Terminal	6-18
AN/TSC-58 and AN/TSC-58A Telegraph Terminal	6-21
Section III. Multichannel	6-23
AN/TCC-60 and AN/TCC-69 Telephone Terminals	6-23
AN/TCC-65 Telephone Terminal	6-26
AN/TCC-72 Telephone Terminal	6-28
AN/TCC-73(V)1, AN/TCC-73(V)2, AN/TCC-73A(V)1 and AN/TCC-73A(V)2 Telephone Terminals	6-30
AN/TRC-113(V)1 Radio Repeater Set	6-33
AN/TRC-121 Radio Terminal Set	6-35
AN/TRC-138 Radio Repeater Set	6-37

	Page
AN/TRC-138A Radio Repeater Set	6-39
AN/TRC-145(V) Radio Terminal Set	6-43
AN/TRC-151(V) Radio Terminal Set	6-46
AN/TRC-170(V) Radio Terminal Set	6-50
AN/TRC-173 Radio Terminal Set	6-53
AN/TRC-174 Radio Repeater	6-56
AN/TRC-175 Radio Terminal Set	6-59
Section IV. Auxiliary Equipment	6-62
AB-1309(V)/TRC Mast	6-62
Section V. Multichannel Satellite Communications Terminals	6-64
General Information	6-64
Defense Satellite Communications System Program	6-65
AN/FSC-9 Satellite Communications Terminal	6-69
AN/FSC-78 and AN/GSC-39 Satellite Communications Terminals	6-71
AN/GSC-40(V) and AN/MSC-64(V) Special Communications Systems	6-73
AN/GSC-49 Jam-Resistant Satellite Communications Terminal	6-78
AN/GSC-52 Medium Satellite Communications Terminal	6-80
AN/MSC-46 Satellite Communications Terminal	6-82
AN/MSQ-114 Satellite Communications Control	6-84
AN/TSC-54 Satellite Communications Terminal	6-86
AN/TSC-85A, AN/TSC-85B(V)1 and AN/TSC-85(V)2 Satellite Communications Terminals	6-88
AN/TSC-86 Satellite Communications Terminal	6-93
AN/TSC-93A and AN/TSC-93B Satellite Communications Terminal	6-95
MILSTAR Ground Command Post	6-103
MILSTAR SMART-T	6-105
STAR-T	6-107
Section VI. Single-Channel Tactical Satellite Communications Radios	6-109
AN/CSZ-1A Sunburst II Processor	6-109
AN/PSC-3 and AN/VSC-7 Tactical Satellite Communications Radio Sets	6-111
HST-4A Satellite Communications or Line-of-Sight Radio	6-115
LST-5B and LST-5C Lightweight Satellite/Line-of-Sight Terminal	6-117
AN/PSC-7 Lightweight Satellite Transceiver	6-119
AN/PSC-5 Enhanced Manpack Ultra High Frequency Terminal	6-121
TSQ-190(V) Special Purpose Integrated Remote Intelligence Terminal (SPIRIT II)	6-123

	Page
MILSTAR SCAMP	6-125
AN/PSN-11 Precision Lightweight Global Positioning System Receiver	6-127
Section VII. High Frequency Radio	6-129
AN/GRC-122, AN/GRC-142, AN/VSC-2, and AN/VSC-3 Radio Teletypewriter Sets	6-129
Section VIII. Communication Centers and Operations Centers	6-135
AN/GSQ-80, AN/GSQ-80A, and AN/GSQ-80B Message Centers	6-135
AN/MSC-25 Communications Operations Center	6-137
AN/MSC-31 and AN/MSC-31A Communication Operations Centers	6-139
AN/MSC-32 and AN/MSC-32A Operations Centers	6-141
AN/TYQ-30(V) and AN/TYQ-31 Communications System Control Elements	6-143
Section IX. Patch	6-148
AN/TSC-76 Communications Patching Center	6-148
AN/TSQ-84 Communications Technical Control Center	6-150
SB-675/MSC and SB-675A/MSC Communications Patching Panels	6-154
Chapter 7 Mobile Subscriber Equipment	7-1
General Information	7-2
Section I. System Control Center-2	7-3
OL-490/TYQ-46(V) Management/Planning Shelter	7-3
OL-489/TYQ-46(V) Technical Shelter	7-5
Section II. Node Center	7-7
AN/GRC-224(P) Radio Set	7-7
AN/TRC-191 Radio Access Unit	7-9
AN/TSQ-154 and AN/TSQ-154A(V)1 Node Management Facility	7-12
AN/TTC-47 Node Center Switch	7-14
Section III. Large Extension Node	7-21
AN/TTC-46, AN/TTC-46A(V)1, AN/TTC-46B(V)1 and AN/TTC-46C(V)1 Large Extension Node Switches	7-21

Page

Section IV. Small Extension Node 7-28

AN/TTC-48(V) Small Extension Node Switch 7-28

Section V. Subscriber Terminal Equipment 7-34

AN/VRC-97 Mobile Subscriber Radiotelephone Terminal 7-34

Section VI. Line-of-Sight Multichannel Radio Terminals 7-37

AN/TRC-190(V) Line-of-Sight Multichannel Radio Terminal 7-37

Section VII. Mobile Subscriber Equipment Contingency Communications 7-45

AN/TTC-50 Communications Central 7-45
AN/TTC-51 Communications Switching Set 7-48
AN/TRC-198(V)1 and AN/TRC-198(V)2 Line-of-Sight Multichannel Radio Terminal 7-51

Glossary Glossary-1

References **(NOT SUBMITTED FOR REVIEW)** References-1

Index **(NOT SUBMITTED FOR REVIEW)** Index-1

Preface

Purpose and Scope

This publication will assist personnel involved with signal planning and operations in a combat environment. It contains general information and technical characteristics of telephone, telecommunications, multiplex, single-channel, multichannel, and mobile subscriber equipment (MSE) normally deployed throughout a theater of operations.

User Information

The proponent of this publication is HQ TRADOC. Send comments and recommendations on DA Form 2028 directly to Commander, United States Army Signal Center and Fort Gordon, ATTN: ATZH-DTL, Fort Gordon, Georgia 30905-5075. Key comments and recommendations to pages and lines of text to which they apply. If DA Form 2028 is not available, a letter is acceptable. Provide reasons for your comments to ensure understanding and proper evaluation.

Unless this publication states otherwise, masculine nouns and pronouns do not refer exclusively to men.

Chapter 1 Telephone Equipment

	Page
Section I. Telephones	1-2
TA-1/PT Telephone Set	1-2
TA-236/FT Telephone Set	1-4
TA-312/PT and TA-43/PT Telephone Sets	1-6
TA-341/TT Telephone Set	1-8
TA-838/TT Telephone Set	1-10
TA-938/G Telephone Set	1-12
TA-954/TT Digital Nonsecure Voice Terminal	1-14
TSEC/KY-68 Digital Subscriber Voice Terminal	1-16
TA-1035/U Digital Nonsecure Voice Terminal	1-18
TA-1042A/U Digital Nonsecure Voice Terminal	1-20
Section II. Switchboards	1-22
SB-22/PT and SB-22A/PT Manual Telephone Switchboards	1-22
SB-3614(V)/TT and SB-3614A(V)/TT Telephone Switchboards	1-24
Section III. Auxiliary Telephone Equipment	1-27
CV-1918A(V)/G Telephone Signal Converter	1-27
J-1077A/U and J-2317A/U Signal Distribution Panels	1-29
TA-248/TT Static Ringing Generator	1-31
TM-184 Terminal Strip and TA-125/GT Terminal Box	1-33

Section I. Telephones

TA-1/PT
Telephone Set

NSN: 5805-00-521-1320

Reference: TM 11-5805-243-12

General Information

The TA-1/PT is a lightweight, weatherproof, sound-powered telephone intended for use on field wire lines in forward areas. It can be used for communications with any local battery field telephone or local battery switchboard. It includes a generator for producing a 20-Hz ringing current.

Technical Characteristics

Range . . . . . Approximately 6 km (3.7 mi) using Field Wire WD-1/TT (10 dB working limit)

Type of Operation . . . . . Local battery

Signaling Voltage . . . . . 65 to 80 V AC, 20 Hz

Type of Signaling

Visual . . . . . Nonadjustable Maltse cross

Audible . . . . . Buzzer, adjustable from LOUD to OFF

Power Requirement . . . . . Sound-powered

Weight:

Telephone . . . . . 1.25 kg (2.75 lb)

Carrying Case . . . . . 3.97 kg (14 oz)

TA-1/PT
Telephone Set

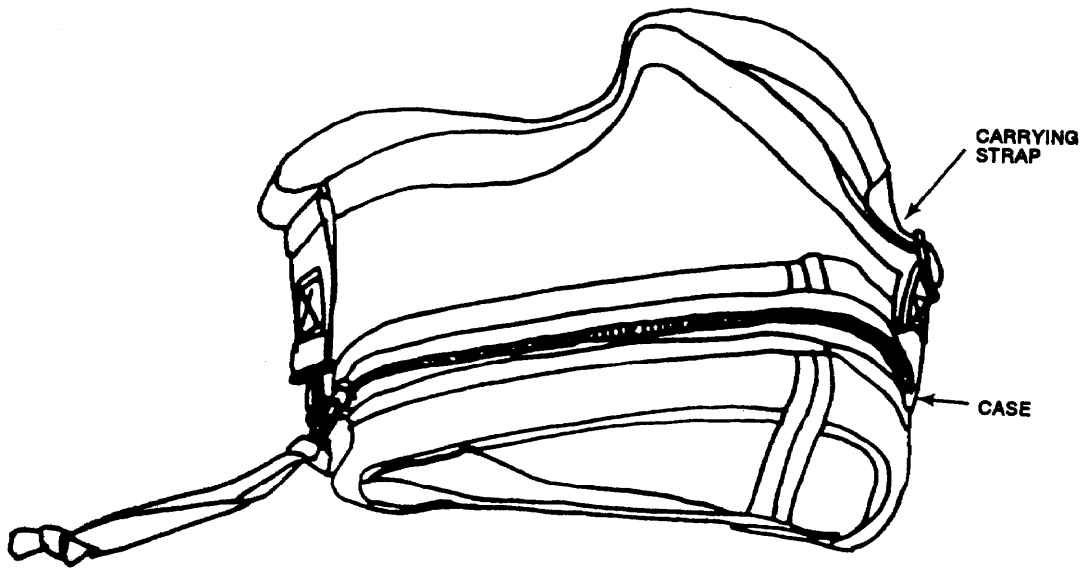

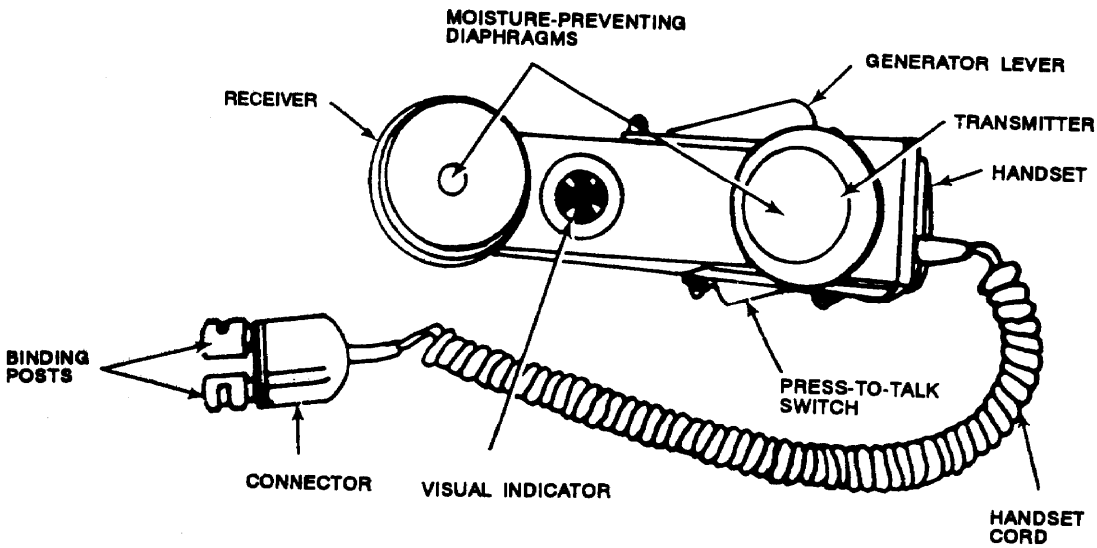

TA-236/FT
Telephone Set

NSN: 5805-00-503-2774

Reference: TM 11-468

General Information

The TA-236/FT is a general purpose, common-battery telephone (manual or dial), and is compatible with all common-battery dial pulse equipment.

Technical Characteristics

Range	Approximately 8 km (5 mi)from central office (36 dB working limit)
Type of Operation	Common battery
Signaling (outgoing)	Dial pulse
Signaling (Incoming)	90 V AC, 20 Hz
Type of Signal	Bell with adjustable volume
Power Requirement	Supplied by central office
Weight	2.27 kg (5 lb)

TA-236/FT
Telephone Set

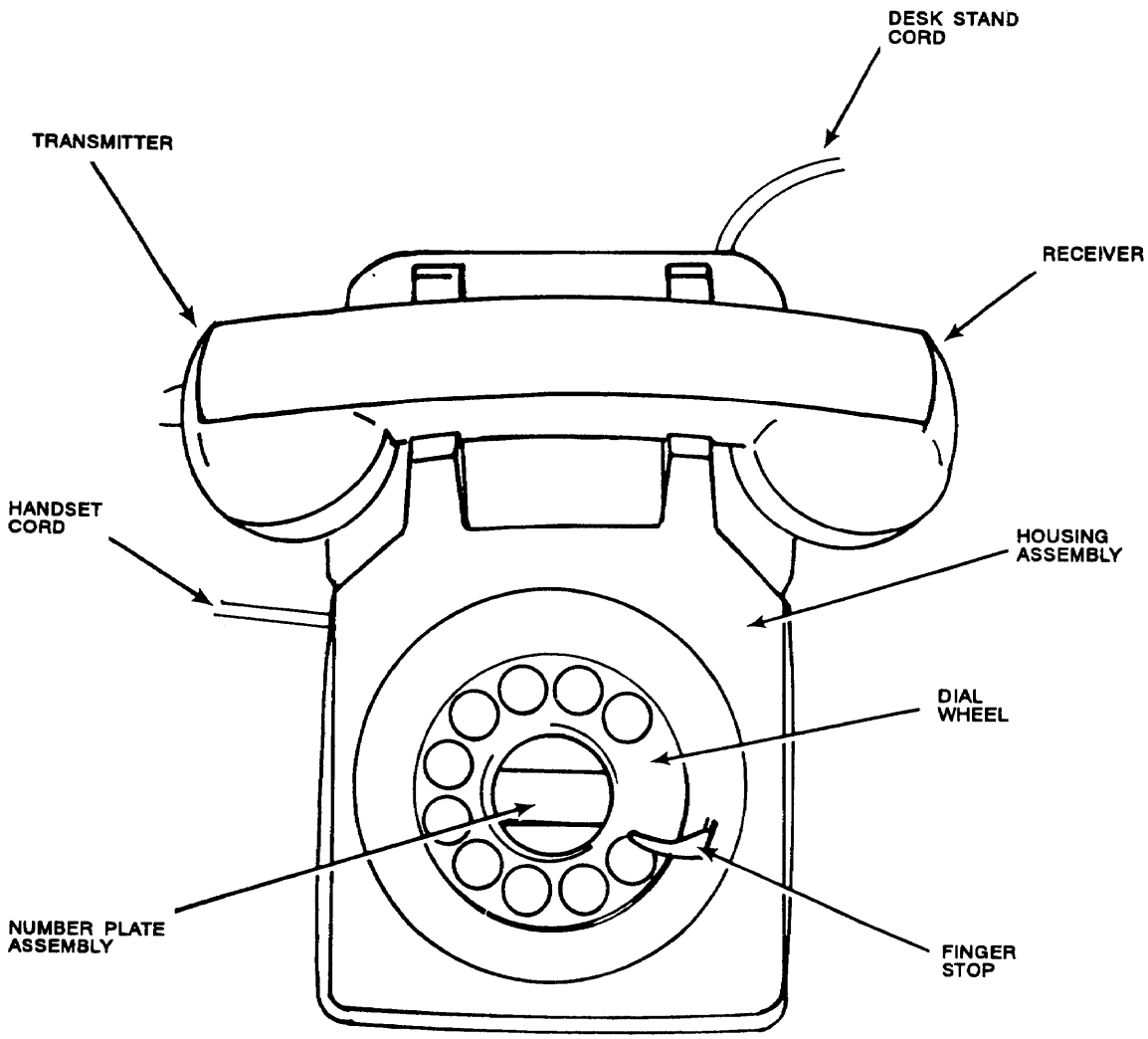

TA-312/PT and TA-43/PT Telephone Sets

NSN: 5805-00-543-0012 (TA-312/PT)
6805-00-503-2775 (TA-43/PT)

Reference: TM 11-5805-201-12 (TA-312/PT)
TM 11-5805-256-13 (TA-43/PT)

General Information

The TA-312/PT and the TA-43/PT are two-wire, battery-operated field telephones. They may be used in a point-to-point wire system or in any two-wire ring-down subscriber position of a telephone communications system. The Handset H-60 contains a push-to-talk switch which connects power for talking. The TA-312/PT has a built-in Receptacle Connector U-79/U for use with a headset and an associated EXT-INT switch; the TA-43/PT does not. The TA-43/PT is being replaced by the TA-312/PT. The TA-955 dual tone multifrequency (DTMF) adapter allows push button operational interface with automatic analog switches.

Technical Characteristics

Range:

Wet ..... Approximately 22.5 km (14 mi) on WD-1/TT (36 dB working limit)

Dry ..... Approximately 36.4 km (22 mi) on WD-1/TT (36 dB working limit)

Type of Operation:

Common Battery ..... Voice transmission and signaling power supplied by switchboard

Local Battery ..... Voice transmission power supplied by two BA-30s, signaling power supplied by a hand-crank generator

Common-Battery Signaling ..... Signaling power supplied by switchboard, voice transmission provided by two BA-30s

Signaling (Outgoing) ..... Hand generated, 90 to 100 V AC, 20 Hz

Signaling (Incoming) ..... Audible tone, adjustable volume

TA-312/PT and TA-43/PT Telephone Sets

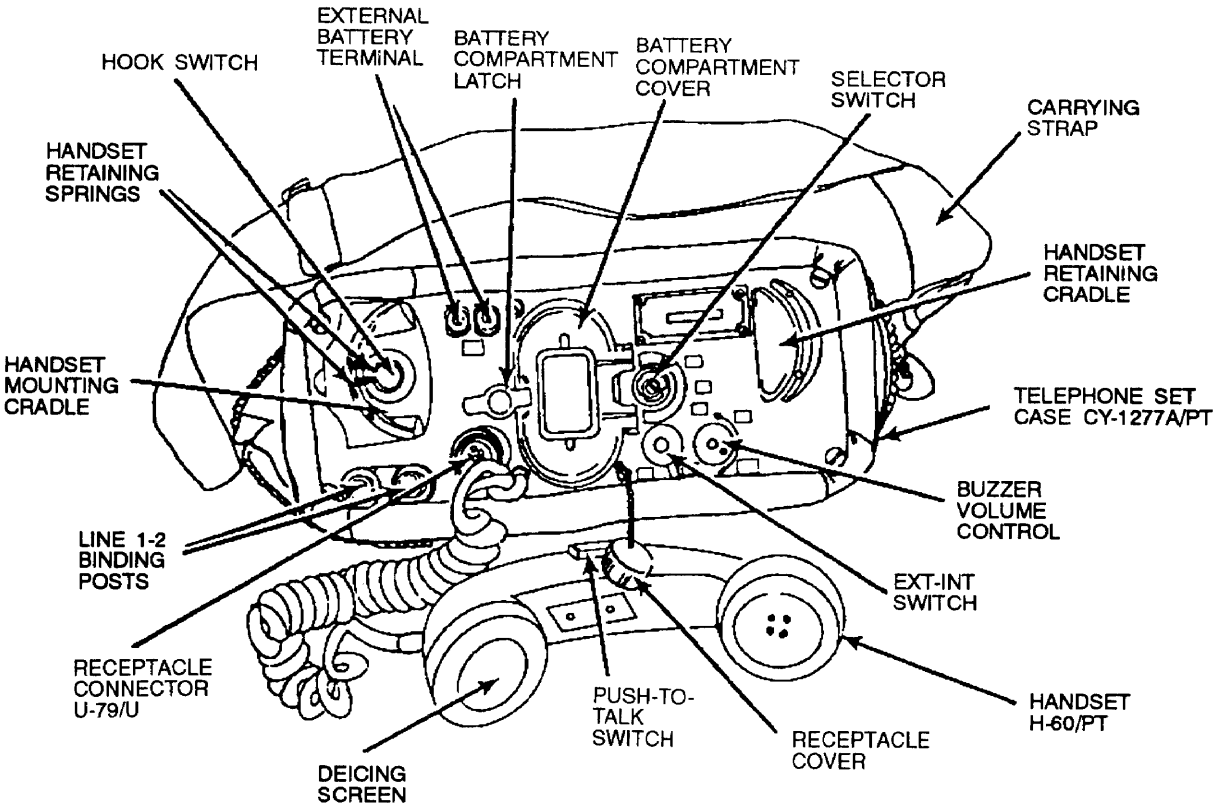

TA-312/PT

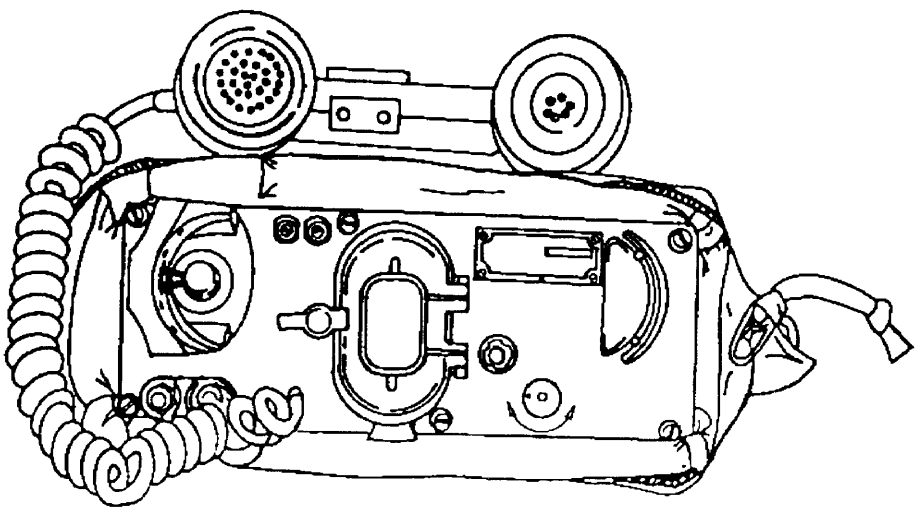

TA-43/PT

TA-341/TT
Telephone Set

NSN: 5805-00-910-8844

Reference: TM 11-5805-384-12

General Information

The TA-341/TT is a four-wire, transistor, local-battery telephone intended for use in sheltered areas. It is designed for use with tactical automatic switches but also can be used in a point-to-point mode. Up to four sets can be bridged across a single four-wire line for extension service. DTMF tones activated by a push-button key sender are used for signaling.

Technical Characteristics

Range . . . . . 3 km (2 mi) from AN/TTC-38 under worst conditions
Type of Operation . . . . . Local or common battery
Signaling (Outgoing) . . . . . 900 to 3400 Hz DTMF
Signaling (Incoming) . . . . . 90 V AC, 20 Hz
Type of Signal . . . . . Audible tone, adjustable volume
Power Requirement . . . . . .6 V DC (four BA-42s or equivalent)
Weight . . . . . 3.2 kg (7 lb)

TA-341/TT
Telephone Set

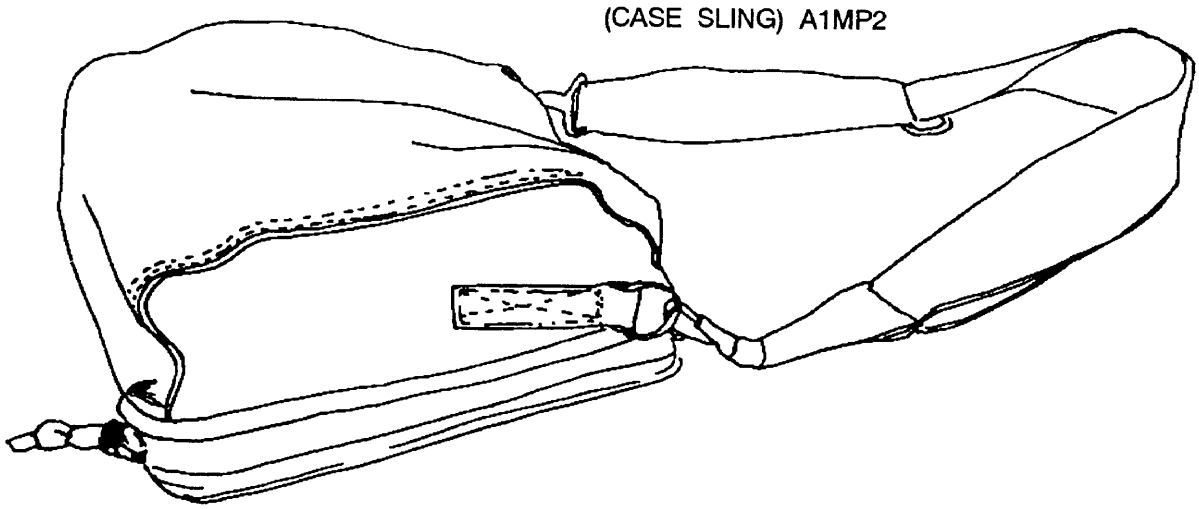

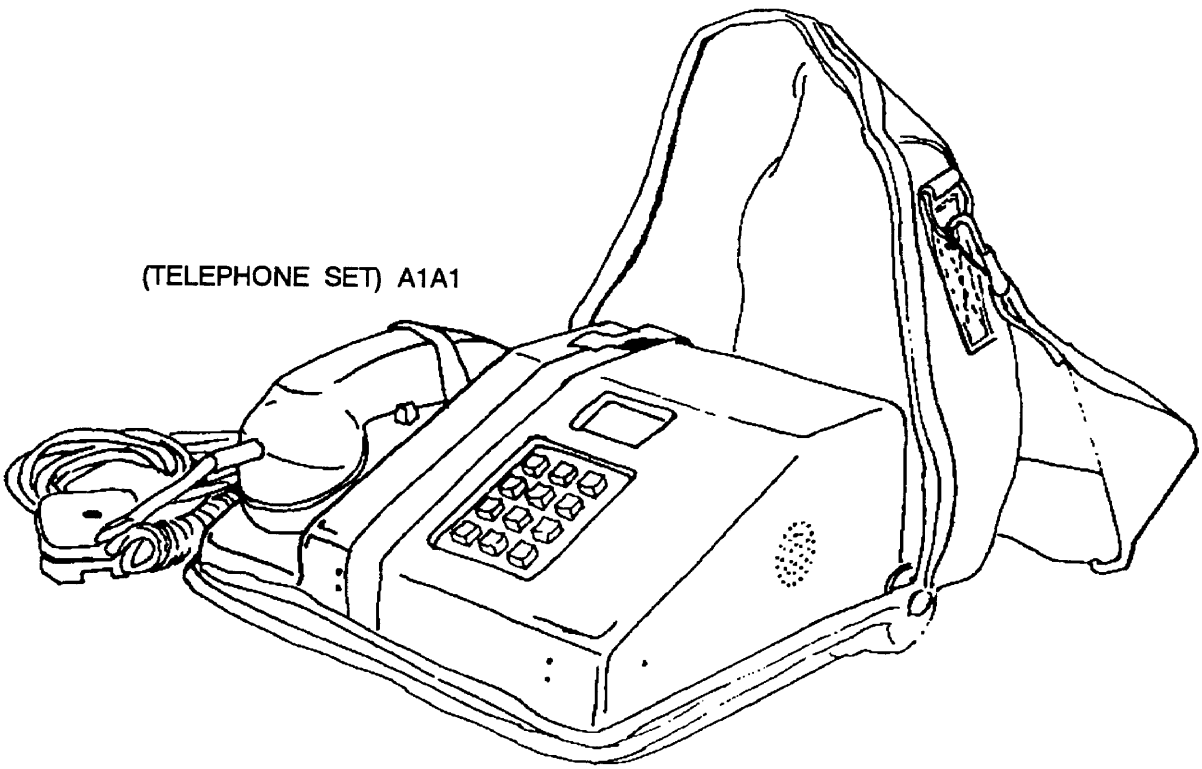

TA-838/TT
Telephone Set

NSN: 5805-00-124-8678

Reference: TM 11-5805-650-12

General Information

The TA-838/TT is a rugged, solid-state, field telephone designed for use with switchboards SB-3614/TT and SB-3614/AT or with the Tactical Automatic Switches AN/TTC-25, AN/TTC-38, AN/TTC-39, and AN/TTC-39A and is capable of compatible inter-operation with TA-341/TT and C-6709 net radio interface (NRI) equipment. It is a two or four-wire local or common-battery set using DTMF tones for signaling and will work with any DTMF semiautomatic *or* automatic circuit. Using the TA-838/TT, up to three extensions may be added in the four-wire mode and only one extension maybe used in the two-wire mode.

Technical Characteristics

Range . . . . . 3.2 km (2 mi) from SB-3614/TT under worst conditions
Type of Operation . . . . . Local or common battery
Signaling (Outgoing) . . . . . 900 to 3400 HzDTMF
Signaling (Incoming) . . . . . 90 V AC,20 Hz
Type of Signal . . . . . Audible tone, adjustable volume
Power Requirement . . . . . 6 V DC (four BA-42s or BA-2042s)
Weight . . . . . 3.6 kg (8 lb)

TA-838/TT
Telephone Set

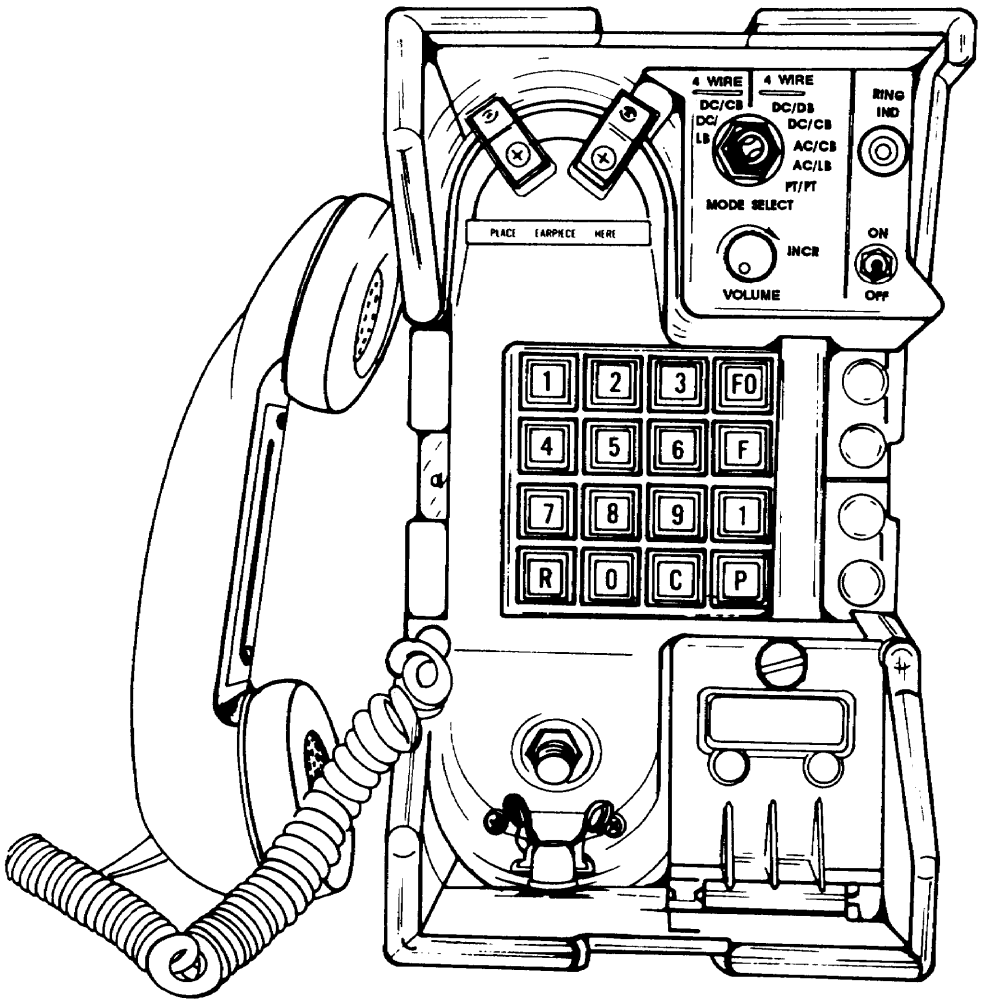

TA-938/G
Telephone Set

NSN: 5805-00-134-2599

Reference: Not available

General Information

The TA-938/G is a two-wire common-battery telephone set intended for use in sheltered areas. The telephone uses DTMF signaling. Two sets can be bridged across a single two-wire line for extension service.

Technical Characteristics

Range	Approximately 8 km (5.0 mi) from central office
Type of Operation	Common battery
Signaling Voltage	90 V AC, 20 Hz
Type of Signal	Bell
Power Requirement	Supplied by central office
Weight	l.8 kg (4 lb)

TA-938/G
Telephone Set

TA-954/TT
Digital Nonsecure Voice Terminal

NSN: 5805-01-159-9691

Reference: TM 11-5805-735-12

General Information

The digital nonsecure voice terminal (DNVT) TA-954/TT is a four-wire terminal contained in a ruggedized case, which transmits and receives conditioned diphase-modulated digitized voice and loop signaling information at 16 or 32 kb/s. The DNVT has a 16-key push button keyboard, receiver and ring volume controls, an incoming call/off-hook indicator light, and writing pad. It contains built-in protection from nuclear energy electromagnetic pulses and lightning. Handset H-350/U is issued with the DNVT. The microphone element is activated when the handset is removed from the cradle (hot mike). The push-to-net radio interface switch is only pressed to key the C-6709. The DNVT provides a digital communications interface with Tri-Service Tactical Communications (TRI-TAC) and Mobile Subscriber Equipment (MSE) circuit switches.

Technical Characteristics

Channel Interface-Field Wire . . . . . 4-wire field cable
Transmission Range . . . . . 4 km (2.4 mi) max
Input Power-Power Drain:
  On Hook . . . . . 300 mW, max
  Off Hook . . . . . 1.5 W, max
Power Requirement . . . . . +24 to +56 V DC
Current Drain:
  On Hook . . . . . 12.5 Ma, +24 V DC
                 5.0 Ma, +56 V DC
  Off Hook . . . . . 62 Ma, +24 V DC
                 25 Ma, +56 V DC
Weight . . . . . 2.7 kg (5.8 lb)

TA-954/TT
Digital Nonsecure Voice Terminal

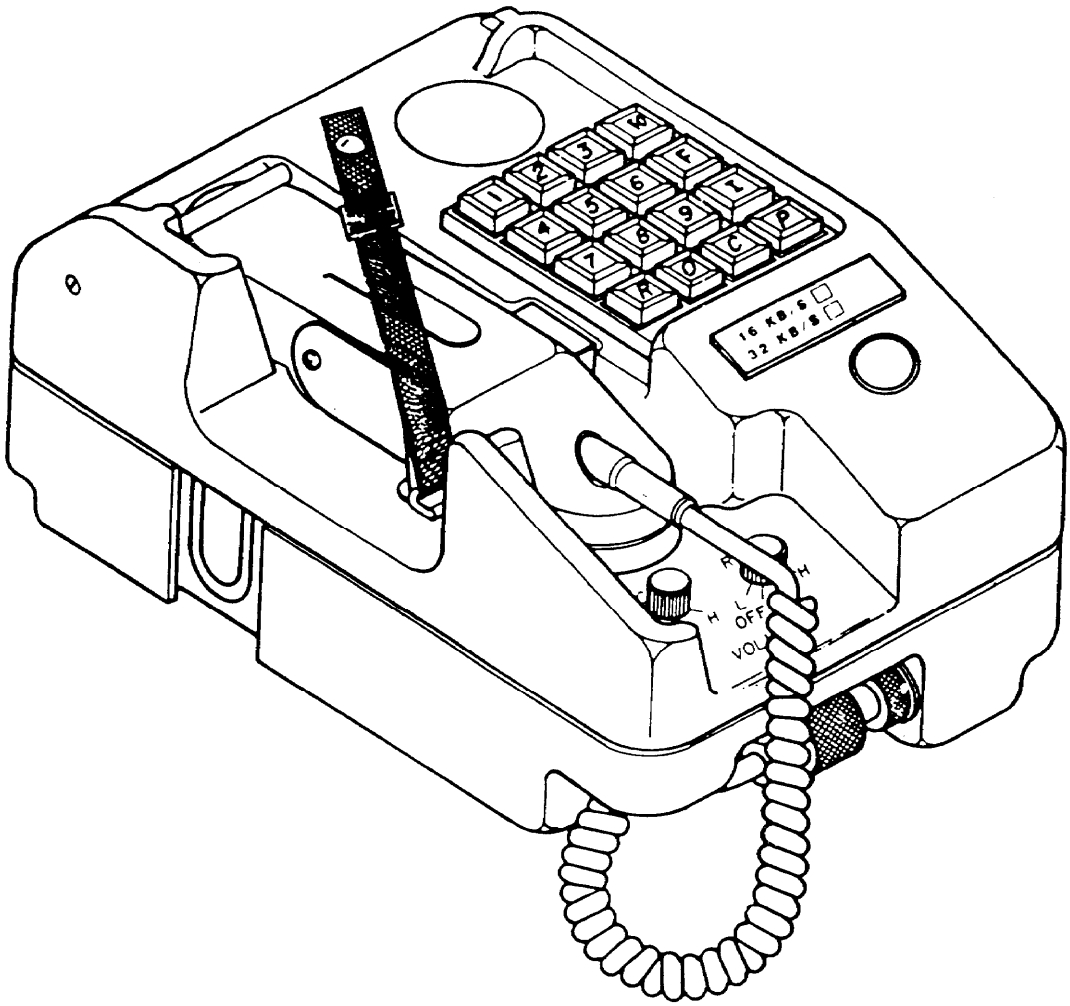

TSEC/KY-68
Digital Subscriber Voice Terminal

NSN: 5810-01-082-8404

Reference: TM 11-5810-329-10

General Information

The digital subscriber voice terminal (DSVT) KY-68 is used for encrypting/decrypting voice traffic and provides secure digitized data traffic. It operates as a full-duplex or half-duplex voice/data subscriber terminal at 16 to 32 kb/s. The KY-68 provides secure and nonsecure access to the switched networks and secure access to non-switched networks. Handset H-350/U is normally issued with the DSVT and includes a push-to-talk switch which is used when the DSVT is operating in the half-duplex mode to allow for voice transmission. The terminal consists of a five-position function switch, audio and ring volume controls, ring/busy, extension, and nonsecure warning indicators. The DSVT provides a digital communications interface with TRI-TAC and MSE circuit switches.

Technical Characteristics

Channel Interface-Field Wire . . . . . 4-wire field cable
Power Requirement . . . . . -21 to -56 V DC (DC voltage is provided by the auxiliary power supply HYF-71/TSEC)
Weight . . . . . 6.3 kg (13.8 lb)

TSEC/KY-68
Digital Subscriber Voice Terminal

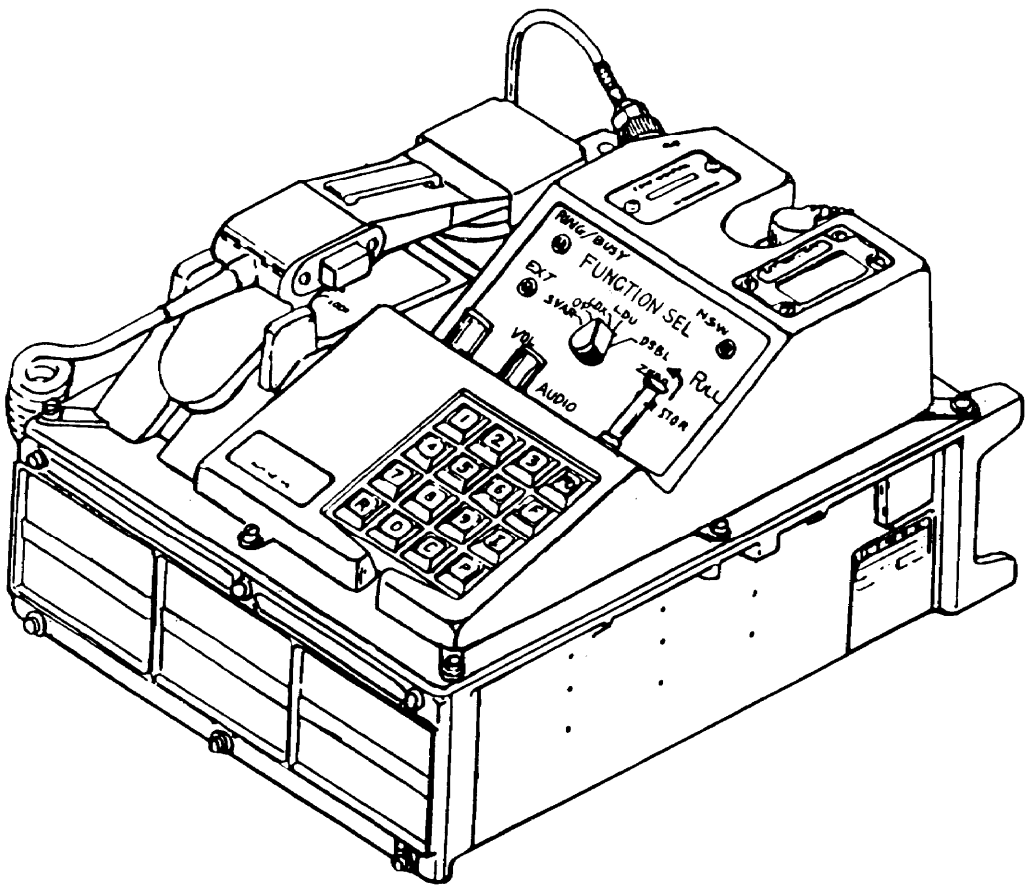

TA-1035/U
Digital Nonsecure Voice Telephone

NSN: 5805-01-246-6826

Reference: TM 11-5805-761-12&P

General Information

As a prime subscriber terminal, the TA-1035/U provides full-duplex, conditioned, diphase digital voice and loop signaling information with wire and mobile access equipment. It also provides supervisory, clock, plain text, and voltage reference signals with data devices. The TA-1035/U provides a data port for interfacing the communications terminal (CT) and AN/UXC-7 data devices to the echelons corps and below (ECB) network. The TA-1035/U operates in a common-battery power mode, deriving its power from the switch line termination circuit.

Technical Characteristics

Cables:
- Channel interface . . . . . 4 conductor field wire, 1,000 ft max (305)
- Data device interface . . . . . Signal cable

Power Requirements:
- Input power (power drain)
- On-hook . . . . . 300 mW, max
- Off-hook . . . . . 1.5 W, max
- Input power (voltage) . . . . . +24 to +56 V DC
- Input power (current drain)
- (On-hook . . . . . 12.5 mA @ +24 V DC
  5.0 mA @ +56 V DC
- Off-hook . . . . . 62 mA @ +24 V DC
  25 mA @ +56 V DC

Weights and Dimensions:
- Length . . . . . 10 in (257.0 mm)
- Width . . . . . 7-3/8 in (185.9 mm)
- Height . . . . . 4-5/8 in (118.9 mm)
- Weight . . . . . 5-3/4 lb (2.6 kg)

TA-1035/U
Digital Nonsecure Voice Telephone

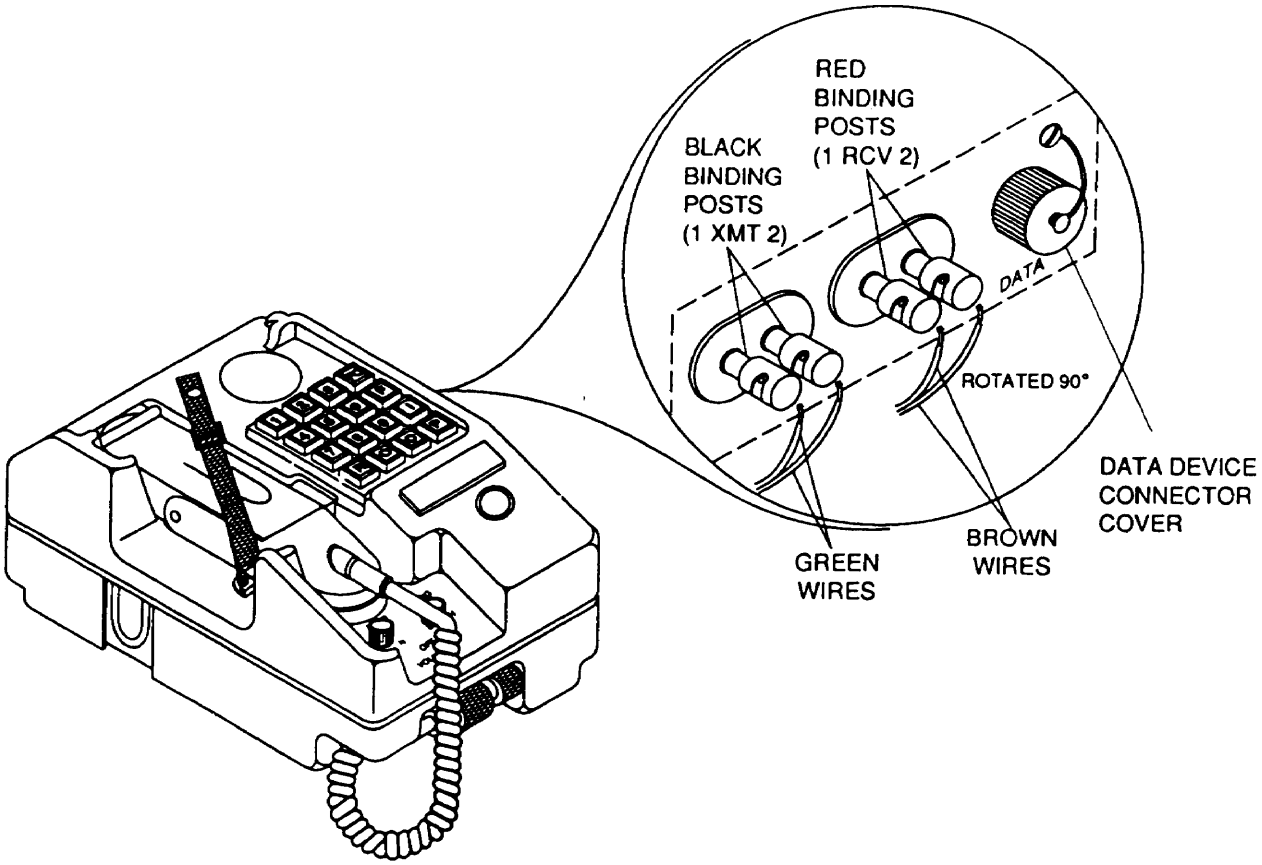

GREEN WIRES
CROSS SECTION

BROWN WIRES
CROSS SECTION

TA-1042A/U
Digital Nonsecure Voice Terminal

NSN: Not available

Reference: TM 11-5805-780-12&P

General Information

The digital nonsecure voice terminal (DNVT) is a ruggedized field telephone. It is operable as a tabletop device in tents, shelters, and office environments. It also may be operated outdoors while strapped to a tree or pole. The DNVT is designed for durability to exposure of the elements during operation and transportation. Voice communication is accomplished through the handset. Digital data from an external device interfaces through the TA-1042A/U's digital data port (DDP). The DNVT transmits and receives full duplex, conditioned diphase digital voice and loop signaling information at 16 or 32 kb/s rates. The DNVT is a nonsecure telephone with no encryption capability. It digitizes voice information using continuously variable slope delta (CVSD) modulation. Digital communication transmissions, both to and from the DNVT, are accomplished using a conditioned diphase (CDP) data transmission method. This is accomplished by using the DDP. The DNVT operates in both common battery mode and local battery point-to-point mode, but not simultaneously.

Technical Characteristics

Overall Dimensions:
- Width . . . . . 7 in
- Height . . . . . 4.25 in

Length . . . . . 9.75 in
Weight . . . . . 4.5 lb(approx)
Temperature Range:
- Normal Operating . . . . . -30 C(-22 F) to +52 C (+125 F)
- Storage . . . . . -57 C (-70 F) to +71C (+160F)

Humidity Range . . . . . Up to 98%

TA-1042/U
Digital Nonsecure Voice Terminal

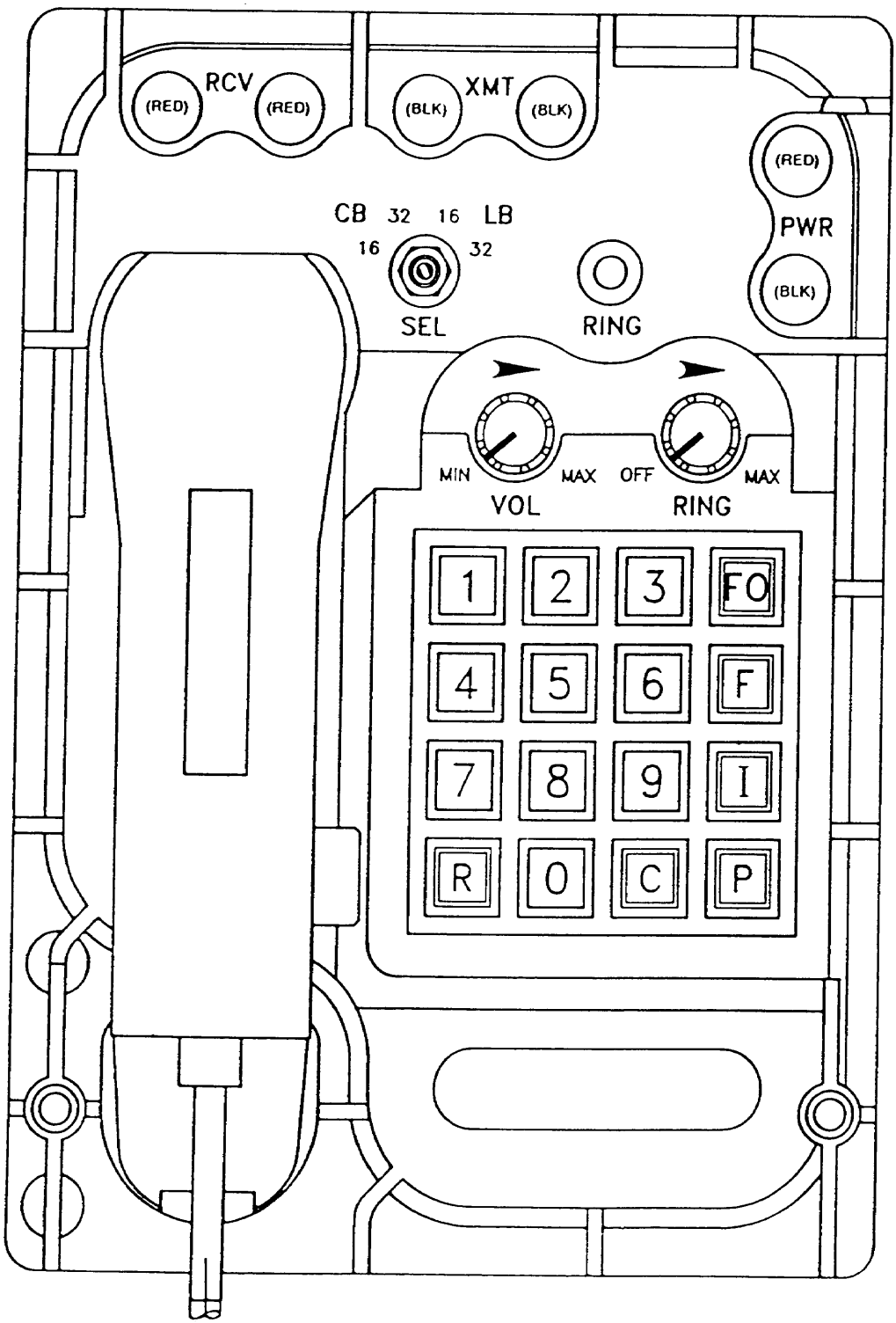

Section II. Switchboards

SB-22/PT and SB-22A/PT Manual Telephone Switchboards

NSN: 5805-00-257-3602 (SB-22/PT)
5805-00-715-6171 (SB-22A/PT)

Reference: TM 11-5805-262-12

General Information

The SB-22/PT and the SB-22A/PT are tactical, manual switchboards that can be rapidly installed to provide field facilities for interconnecting 12 local-battery telephone circuits, remote controlled radio circuits, or voice frequency (VF) teletypewriter circuits. Two SB-22/PTs may be stacked to provide a 29-circuit capability by removing one TA-221/PT (operator's pack) and inserting five TA-222/PTs (line packs). Replacing a line pack with a trunk pack permits one-way ring-down, and one-way automatic trunk circuits between the SB-22A/PT and any other switchboard with common-battery signaling. The Tone-Signaling Adapter TA-977/PT provides the operator with a two-wire push-button tone-signaling capability for interfacing automatic switches without operator intervention.

Technical Characteristics

Type of Operation . . . . . Manual with local battery
Line Capacity 12
Signaling (Outgoing) . . . . . 90 to 100 V AC, 20 Hz
Signaling (Outgoing) with adapter. . . . . DTMF
Signaling (Incoming) . . . . . 90 V AC, 20 Hz
Type of Signal . . . . . Audible or visual alarm
Power Requirement:
  Operator's Talking Circuit . . . . . 3 V DC (two BA-30s)
  Night Alarm and Panel Light . . . . . 3 V DC (two BA-30s)
Weight . . . . . 15.4 kg (34 lb)

SB-22/PT and SB-22A/PT Manual Telephone Switchboards

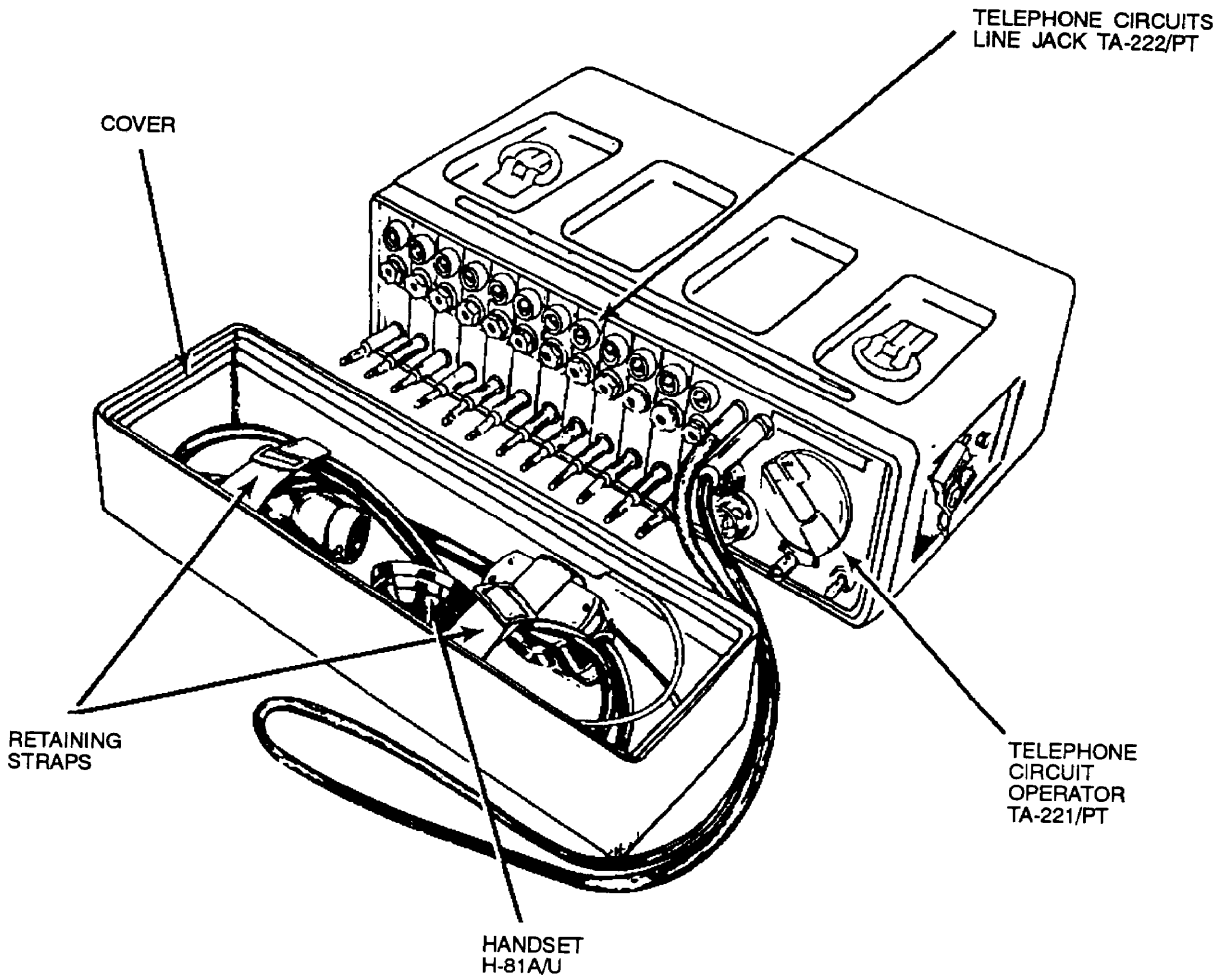

SB-3614(V)/TT and SB-3614A(V)/TT Telephone Switchboards

NSN: 5805-01-032-1694 (SB-3614(V)/TT)
5805-01-216-0887 (SB-3614A(V)/TT)

Reference: TM 11-5805-695-12 (SB-3614(V)/TT)
TM 11-5805-749-12 (SB-3614A(V)/TT)

General Information

The SB-3614 is a tactical, ruggedized, 30-terminal automatic switchboard. It provides rapid, cordless service to various interfaces. It may operate as a 30-terminal, single-switching facility or maybe connected with additional switchboards to form a 60- or 90-line system. The switchboard operator can monitor, answer, initiate, extend, preempt, and release calls using the four-by-four key sender and other functional push buttons. Any connection can be broken down manually, through operator intervention and action, *or* automatically, through a subscriber going to an on-hook condition. A maximum of 18 terminals may be connected as either four-wire DTMF signaling trunks, or DC closure dial pulse or DTMF trunks, ear and mouth (E&M) dial pulse or DTMF lines or trunks. The switchboards provide fully automatic operation with touch tone subsets and two- and four-wire trunks and limited service with rotary dial pulse subsets. The SB-3614(V)/TT requires manual tandem dialing when dialing outside of your local switchboard. The SB-3614A(V)/TT automatically routes the call through the network using primary or alternate routes. For common-battery signaling or ring-down lines and trunks without DTMF capability, the switchboard provides call extension service. DTMF subscribers have direct distant dialing (7-, 10-, and 13-digit) and Defense Switching Network (DSN), Dial Central Office (DCO), and commercial access capabilities. Other features of the SF3-3614A(V)/TT include facsimile service, call forwarding, preemption by precedence, conference calling, and subscriber (loop) hunting.

Technical Characteristics

Type of Operation . . . . . Manual or automatic
Power Requirement . . . . . 24 V DC, 5 amp (max)
Terminals . . . . . 30 in each switchboard
60 or 90 in expanded mode
Simultaneous Conversations . . . . . 15 for one switchboard
30 for expanded operation
Precedence Levels . . . . . SB-3614(V)/TT: routine and priority
SB-3614A(V)/TT: routine, priority, immediate, flash, and flash override

Technical Characteristics (Cont.)

Types of Terminal PCB . . . . . Type I
Type II
Type III
Type IV
Type V
Type VI (SB-3614A(V)/TT only)
Type XI (SB-3614A(V)/TT only)

SB-3614(V)/TT
Telephone Switchboard

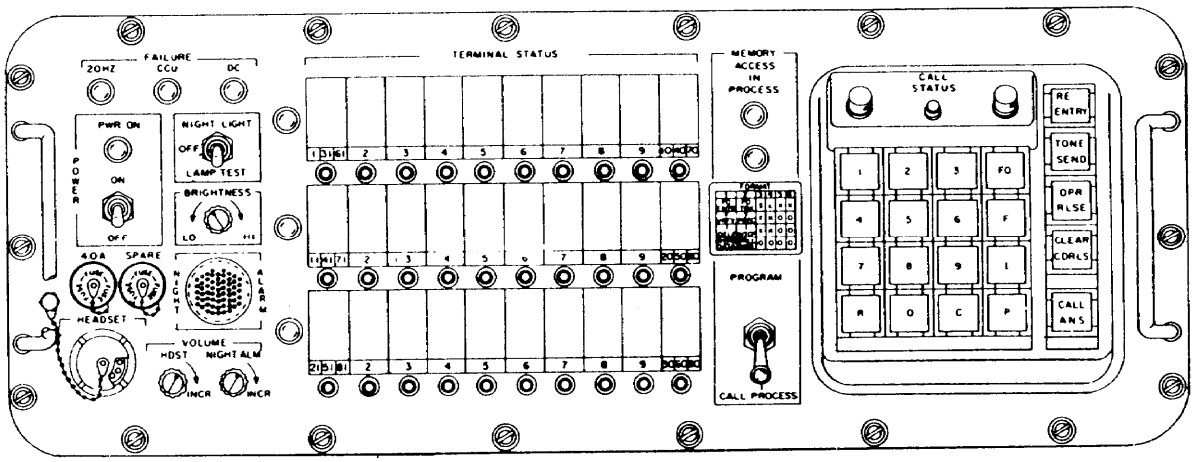

SB-3614A(V)/TT
Telephone Switchboard

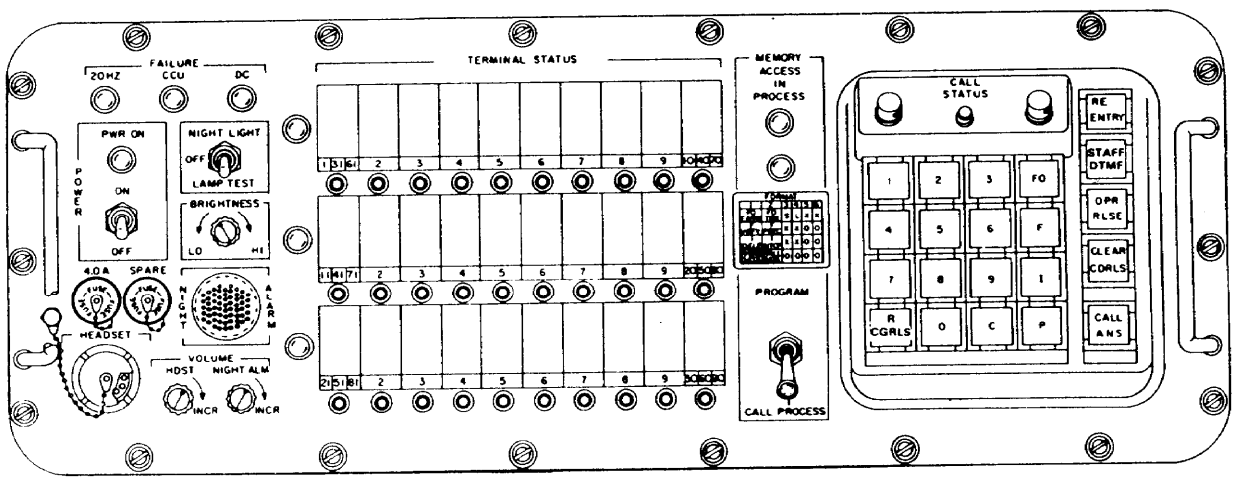

Section III. Auxiliary Telephone Equipment

CV-1918A(V)/G
Telephone Signal Converter

NSN: 5805-00-504-9103 (CV-1918A(V)1/G)
5805-00-137-7674 (CV-1918A(V)3/G)

Reference: TM 11-5805-553-13

General Information

The CV-1918A(V)/G is a transistorized, eight-channel telephone signal converter designed to interface between automatic and manual telephone central offices. The CV-1918A(V)/G and the automatic telephone central office communicate with each other using electronic signal tones. The operator's actions are translated into signal tone commands by the CV-1918A(V)/G. When installed on either the SB-249TT/C or SB-1398/GTA-14(V) switchboard, the converter provides two-wire to four-wire and four-wire to two-wire telephone signal compatibility. In addition to establishing a voice path between the two different telephones, the CV-1918A(V)/G generates the tones required to activate the automatic telephone central office switching functions. The manual switchboard operator can dial into the automatic switch using the DTMF dialing capability on the CV-1918A(V)/G. The three CV-1918A(V)/G models differ only in the quantities of components used in their configuration.

Technical Characteristics

Transmission Range . . . . . 3.2 km (2mi)
Circuit Capacity . . . . . 8 channels
Voice Frequency Range . . . . . 300 to 3500 Hz
Operating Power:
Internal . . . . . 6 and-3 V DC
External . . . . . 48 V DC
Type of signal . . . . . Audible night alarm with adjustable volume
Weight . . . . . 55.4 kg (122 lb) (CV-1918A(V)l/G)
36 kg (80 lb) (CV-1918A(V)2/G)
33.1 kg (73 lb) (CV-1918A(V)3/G)

CV-1918A(V)/G
Telephone Signal Converter

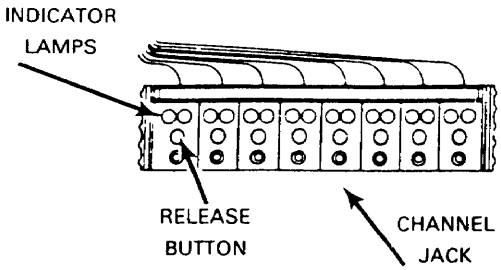

TRUNK UNIT

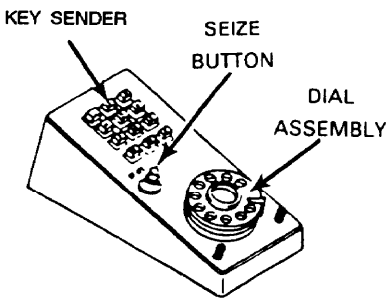

KEY CALL PEDESTAL UNIT

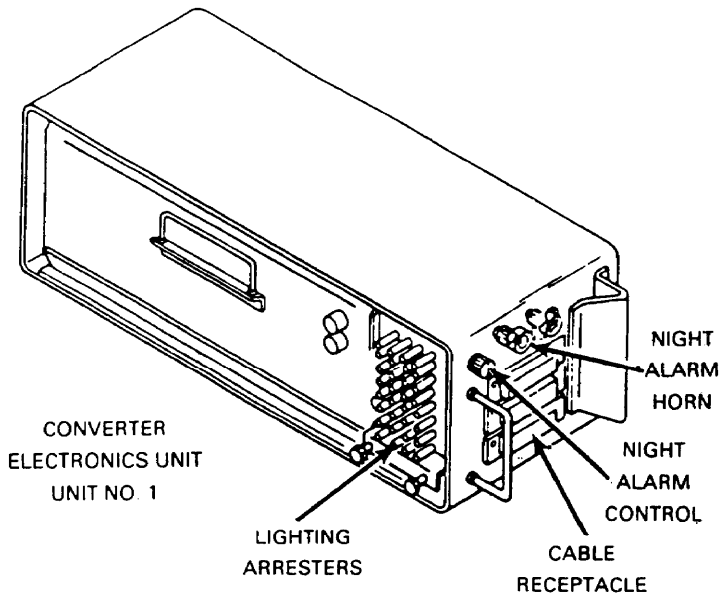

CV-1918 COMPONENT QUANTITIES

SYSTEM COMPONENTS	CV-1918A(V)1/G	CV-1918A(V)2/G	CV-1918A(V)3/G
Electronics Units	1	1	1
Universal Mounting Plate	2	2	2
Trunk Unit	9	3	2
Key Call Pedestal	9	3	2
Distribution Box	1	1	1
CX-2584/U Signal Cable	18	6	4
Power Cable	1	1	1

J-1077A/U and J-2317A/U Signal Distribution Panels

NSN: 6110-00-985-7574 (J-1077A/U)
6110-00-937-4964 (J-2317A/U)

Reference: TM 11-6110-201-12P (J-1077A/U)
TM 11-6110-243-14P (J-2317A/U)

General Information

The J-1077A/U is a hard-wired (normal through) distribution box. It is used for interconnecting field wire or any other wire lines which are accessible for binding post connection traffic capability using 26, two-wire lines. Two J-1077A/U's are required for use during field expedient patching. The J-2317A/U has four 26-pair connectors. Each connector terminates on respective binding post strips A, B, C, or D. The primary use of the J-2317A/U is field expedient patching or main frame distribution. All circuits used must be internally patched with jumper wires.

J-1077A/U and J-2317A/U Signal Distribution Panels

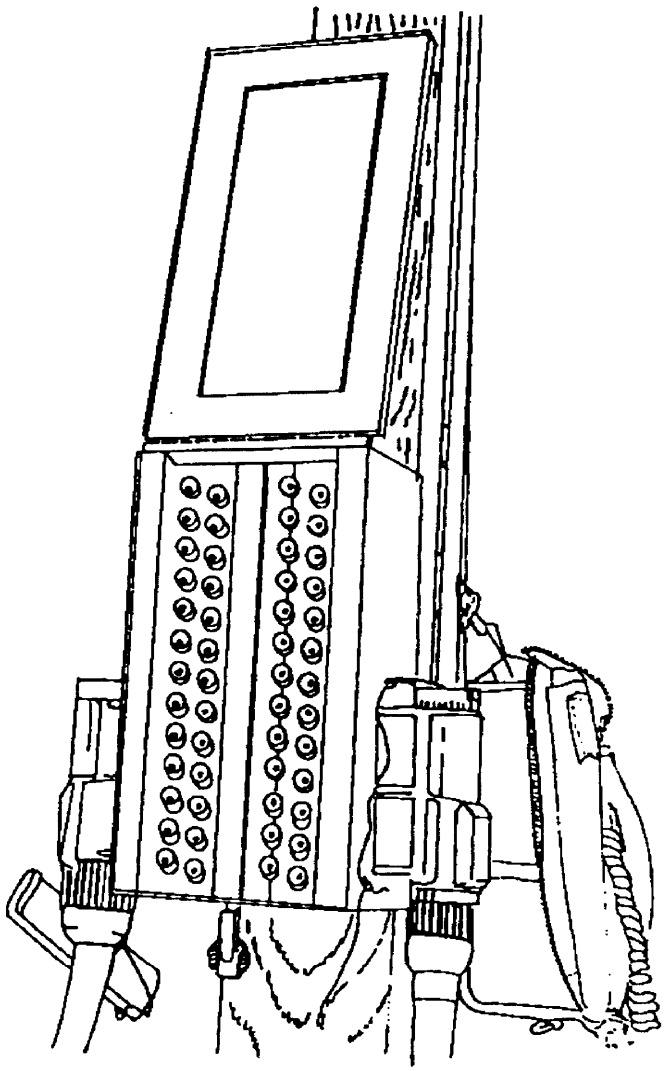

J-1077A/U

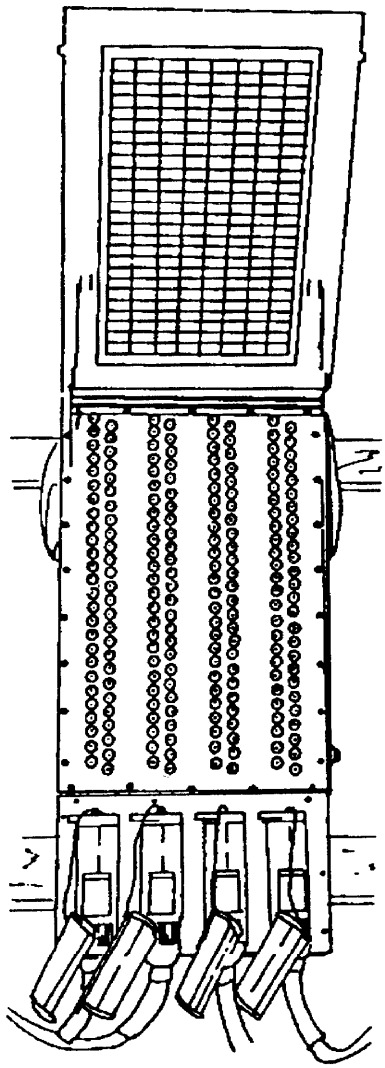

J-2317A/U

TA-248/TT
Static Ringing Generator

NSN: 5805-00-503-1482

Reference: TM 11-5805-298-15

General Information

The TA-248/TT produces a 90 V AC, 20-Hz ringing voltage for telephone switchboards.

Technical Characteristics

Power Requirement . . . . . 110 V AC, 50 to 60 Hz
Output . . . . . 90 V AC, 20 Hz
Weight . . . . . 3.4 kg (7.5 lb)

TA-248/TT
Static Ringing Generator

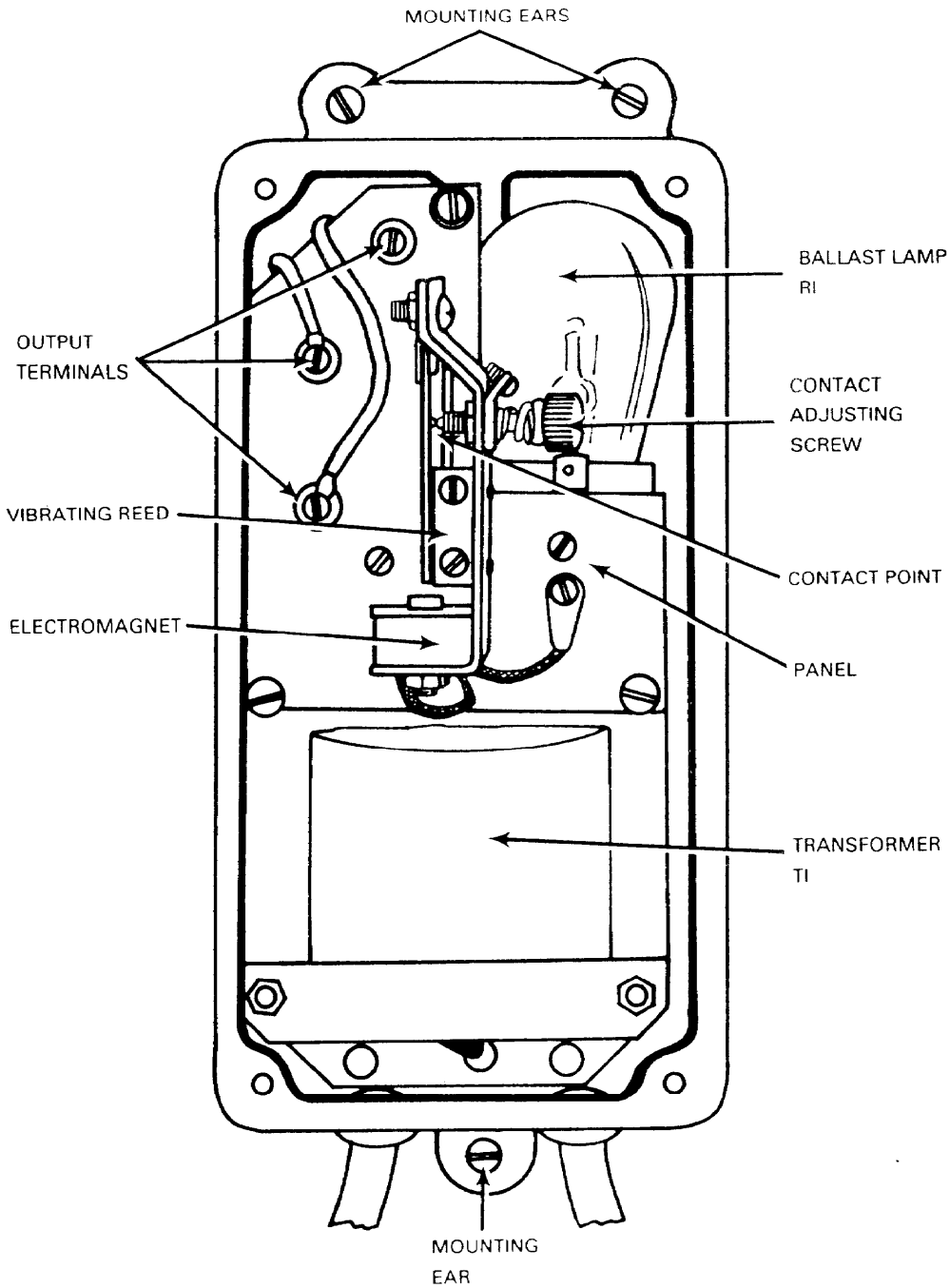

TM-184 Terminal Strip and TA-125/GT Terminal Box

NSN: 6110-00-538-0777 (TA-125/GT)

Reference: FM 24-20 (TM-184)
TM 11-2138 (TA-125/GT)

General Information

The TM-184 is a block of insulating material on which 28 insulation-piercing binding posts and four mounting holes are mounted. This terminal strip can terminate seven pairs of wires. The TA-125/GT is a small, lightweight terminal. It is used at signal centers and test points where weatherproof terminations are essential for uninterrupted service. The terminal box is used wherever rapid installation of field wire or cable circuits is required. It also may be used as a main distributing frame for small manual telephone switchboards.

TM-184 Terminal Strip and TA-125/GT Terminal Box

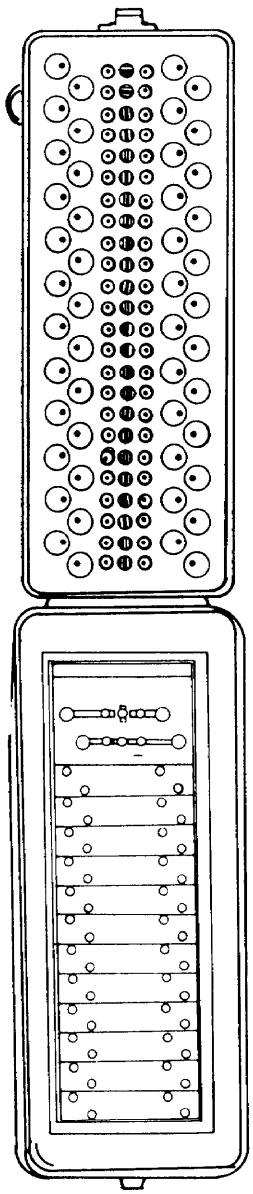

TA-125/GT

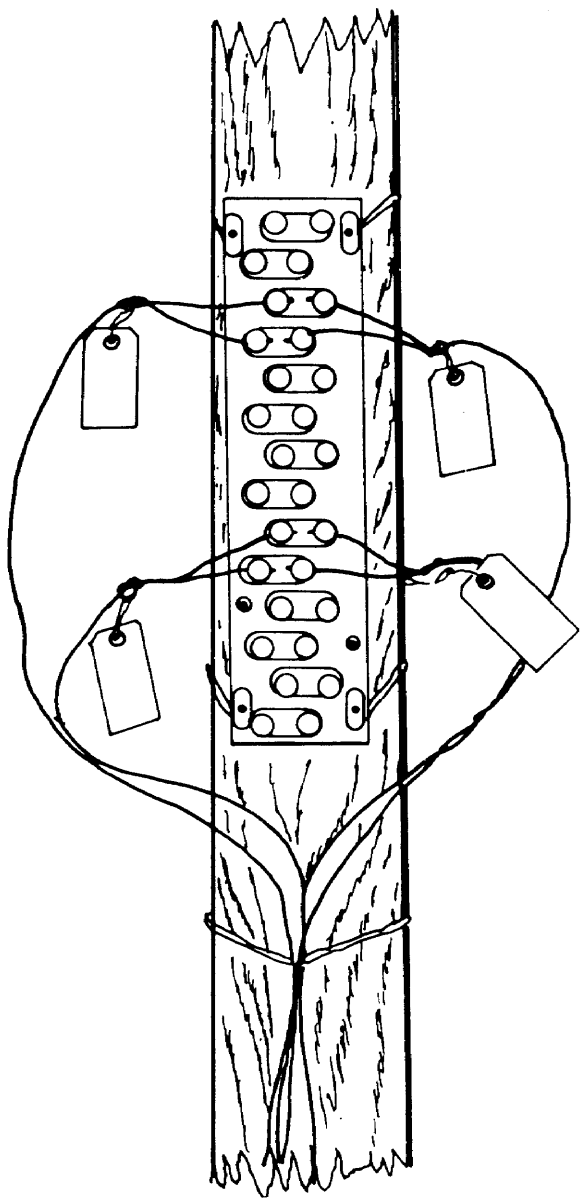

TM-184

Chapter 2 Telecommunications Equipment

	Page
Section I. Teletypewriter Equipment	2-2
AN/UGC-74A(V)3 Communications Terminal	2-2
AN/UGC-144 Communications Terminal	2-4
MOD-40/8B Data Terminal	2-7
Section II. Facsimile Equipment and Tactical Computer Systems	2-9
AN/GXC-7A Tactical Facsimile Set	2-9
AN/UXC-7 Tactical Digital Facsimile Set	2-11
Section III. Computer Equipment	2-13
AN/TYQ-33(V) Tactical Army Combat Service Support Computer System	2-13
AN/UYQ-43(V)1 and AN/UYQ-43(V)2 Tactical Computer Processor	2-16

Section I. Teletypewriter Equipment

AN/UGC-74A(V)3
Communications Terminal

NSN: 5815-01-062-8194

Reference: TM 11-5815-602-10

General Information

The AN/UGC-74A(V)3 is a message communications terminal used to compose, edit, store, transmit, receive, and print Army record traffic communications. The AN/UGC-74A(V)3 will interface/operate with existing and post-1980 communications security (COMSEC) equipment. It can communicate bit serial data represented in ITA-2 (Baudot) or American standard code for information interchange (ASCII) codes. The mode of transmission shall be asynchronous or synchronous depending on the data rate. The AN/UGC-74A(V)3 is designed to replace current tactical electromechanical teletypewriter equipment.

Technical Characteristics

Method of Transmitting	Standard four-row keyboard plus four special keys
Method of Receiving	Page copy only, single or multi-ply (three-ply max) roll paper
Type of Signal	20 or 60 mA neutral operation and Lo Data
Operation Mode	Full or half duplex
Speed Option	60 to 1,600 wpm
Power Requirement	22 to 30 V DC (DC power to maintain memory only in the event of AC power loss), 115 V AC ± 15%, 50, 60, or 400 Hz ± 5% 230 V AC ± 15%, 50, 60, or 400 Hz ± 5%
Power Consumption	100 W max
Weight	45.4 kg (100 lb) two-man carry

AN/UGC-74A(V)3
Communications Terminal

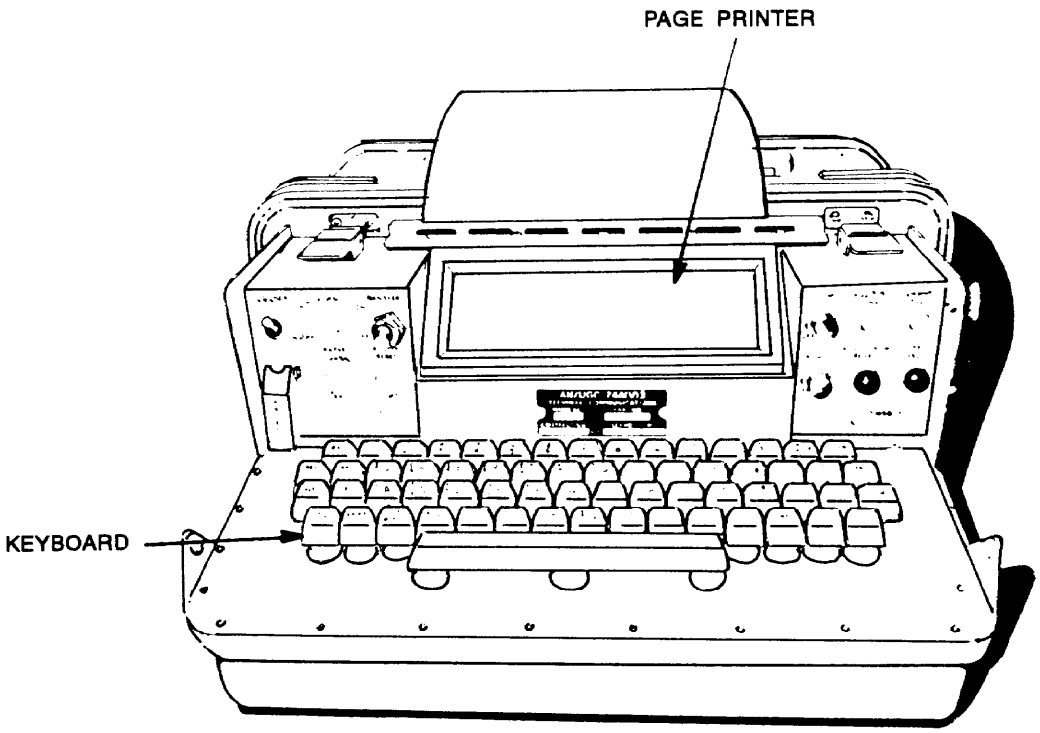

AN/UGC-144
Communications Terminal

NSN: 5815-01-262-4611

Reference: TM-11-7025-267-12

General Information

The AN/UGC-144 provides single subscriber operation. When in a network, the unit has a full-duplex asynchronous communications capability. It operates at signaling speeds of 45.5 to 32,000 b/s at ASCII data transfer rates. The single subscriber terminal (SST) can compose, edit, display, refile, store, transmit, and receive messages. It can monitor narrative message traffic in the R, U, and Y communities and can provide terminal-to-terminal voice communications if needed. ASCII or BAUDOT modes are available with normal input keying capability. The companion printer is a portable 85 column (or optional 136 column) serial, dot matrix line printer/plotter. It is a medium speed device that includes interface data, power supply, paper supply, and control mechanisms. It produces an alphanumeric printout at 50 to 240 characters per second depending on character font and number of characters per line selected.

Technical Characteristics

TERMINAL:

Data Transfer Rate	DACB rates: 2,400 to 32,000 b/s Non DACB rates: 75X2n to 9,600, 16,000, and 32,000 b/s BAUDOT rates: 45.5, 50, and 75
Access Time	10 msec
Primary Voltage Input	100/130 V AC, 48/63 HZ or 200/260 V AC, 48/63 HZ
Consumption	93W
Dissipation	15 W ± 10%
Battery	Four 1.5-V NI-CAD, C-size
Height (Closed)	25 cm (10.0 in)
Height (Open)	43 cm(17.0 in)
Width	51 cm (20.0 in)
Depth	56 cm (22.0 in)
Weight	25 kg (55 lb)

Technical Characteristics (Cont.)

PRINTER:

Speed . . . . . 150/240 cps
Primary Voltage Input . . . . . .100/130 V AC, 48/63 Hz or 200/260 V AC, 48/63 Hz
Consumption . . . . . 13 W average
Height (Closed). . . . . 15 cm (6.0 in)
Height (Open) . . . . . 19 cm (7.5 in)
Width . . . . . 38 cm (15.0 in)
Depth . . . . . 36 cm (14.0 in)
Weight . . . . . 6 kg (l3.2 lb) without paper

AN/UGC-144
Communications Terminal

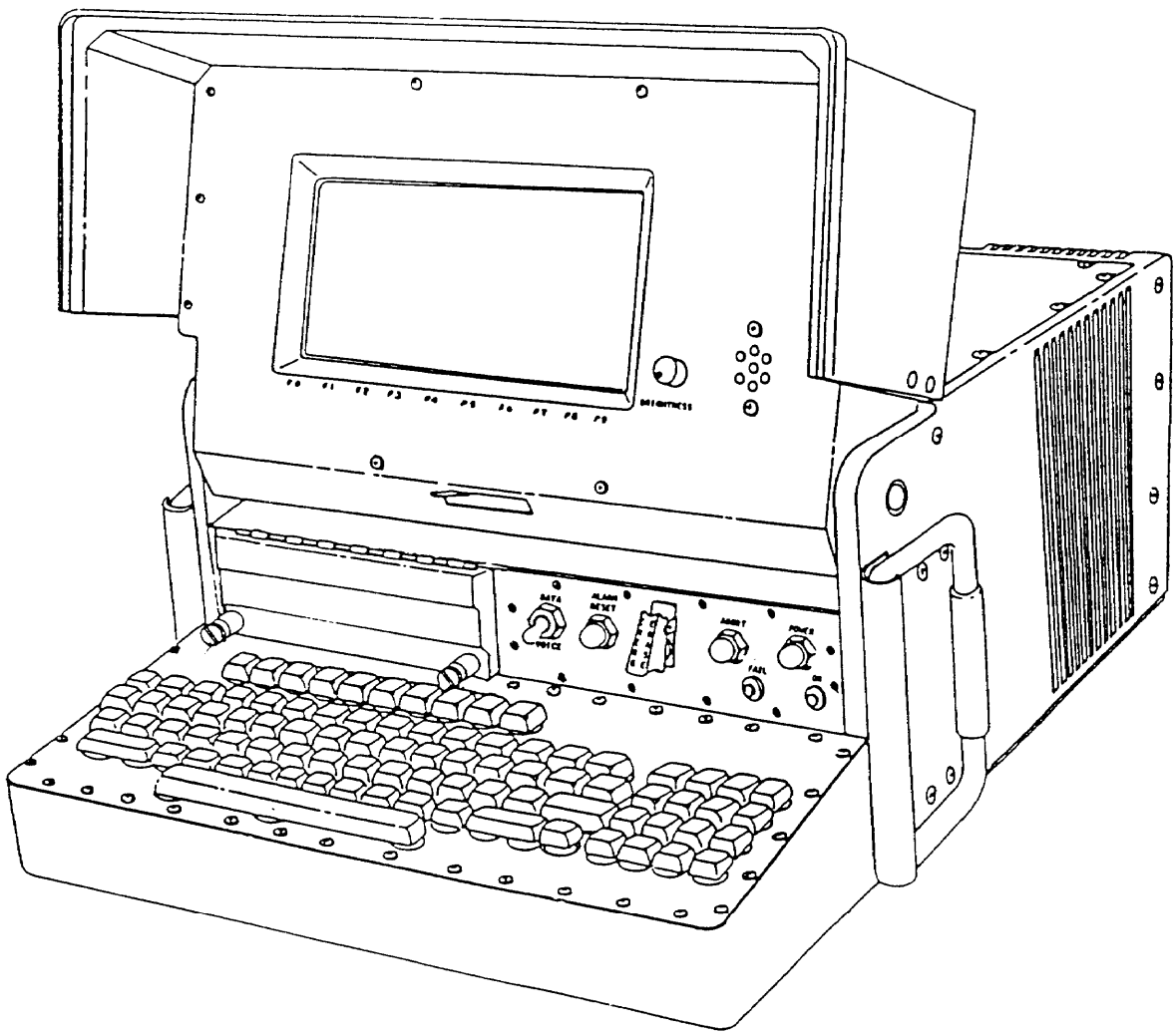

NOTE: Printer is separate.

MOD-40/8B
Data Terminal

NSN: Not available

Reference: Not available

General Information

The MOD-40/8B airport surveillance radar (ASR) terminal provides interactive data communications with a central message processor or other similarly equipped terminals. It includes a keyboard/display (KD) and also may be equipped with up to three cassette-drive units for storage and retrieval. The message being prepared locally or being received may be displayed on the computer terminal cathode ray tube (CRT) for editing prior to transmission or to storage on cassette. It also is equipped with an 80-column tractor-feed printer. The MOD-40/8B can be interfaced with automated message media equipment (AMME), automatic digital network (AUTODIN), and the AN/TYC-39.

Technical Characteristics

Method of Transmitting	Standard four-row keyboard plus special keys
Method of Receiving	Screen display, magnetic tape, and page printer
Operation Mode	Full duplex
Input-Output Speed	2,400 b/s using the (ITA-2) Baudot or (ITA-5) ASCII codes
Power Requirement	115 V AC ± 10% at 48/52 or 58/62 Hz
Power Consumption	2,885 W

MOD-40/8B
Data Terminal

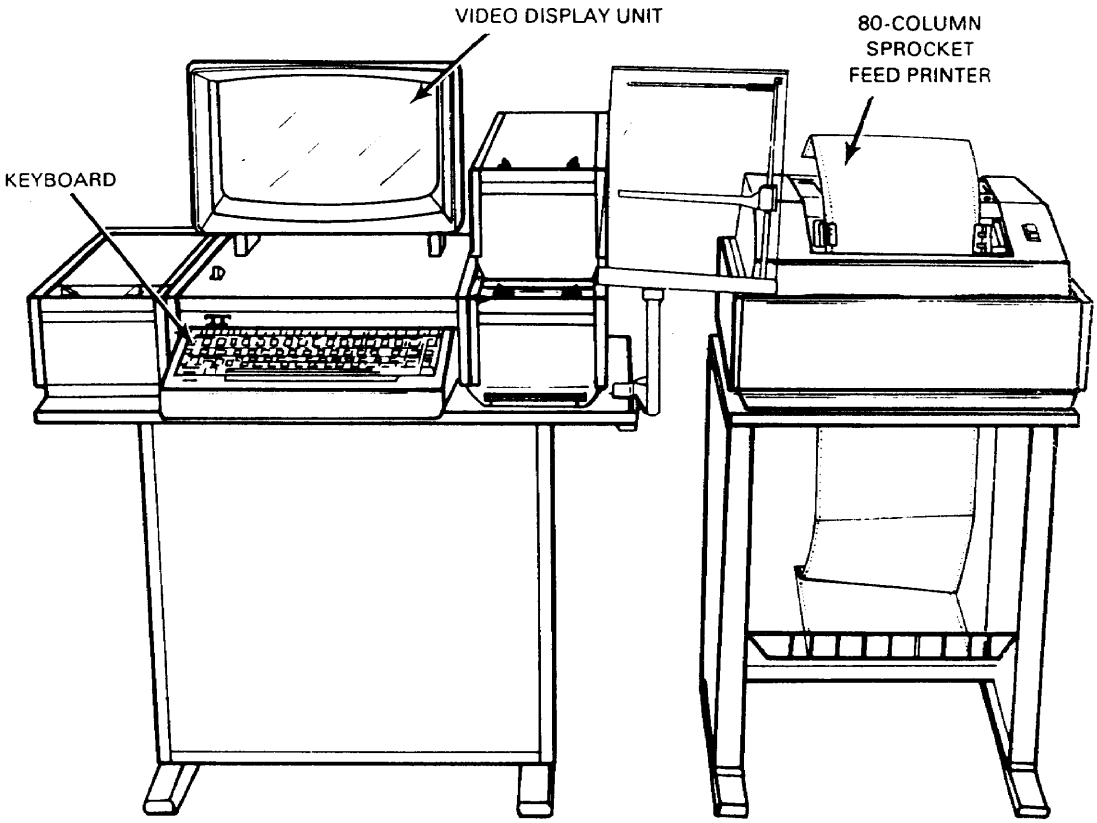

Section II. Facsimile Equipment and Tactical Computer Systems

AN/GXC-7A
Tactical Facsimile Set

NSN: 5815-01-067-4655

Reference: TM 11-5895-1079-14-1

General Information

The AN/GXC-7A is a lightweight, rugged, portable, low power system capable of operating from standard and vehicular power. It enables electronic transmission/reception of typed or handwritten record traffic, maps, overlays, drawings, photographs, and other types of documents containing black and white, color, or gray shades. The tactical facsimile will operate over existing and proposed standard voice radios and wire circuits.

Technical Characteristics

Printing . . . . . Any paper, using carbon paper transfer, including single copy sets, multiple copy sets, transparencies, map overlays, and view graphs
Power Requirement . . . . . 115/230 V AC, 47/400 Hz or 22/32 V DC, 50 W
Weight . . . . . 24 kg (53 lb) including carrying case

AN/GXC-7A
Tactical Facsimile Set

MEDIA	CONNECTION	INTERFACE	COPYTIME MINUTES (FULL PAGE)	GRAY SHADES
Field Wire	WD-1	TA-312	4,6	8
Phone Network	Autovon DDD	Acoustic or Direct Coupled	4,6	8
VHF Radio	Voice X-Mode	AN/VRC-12 AN/PRC-77	4,6 2,3	8
VHF Radio Secure	X-Mode(wideband)	KY-8/28/38 KY-57/58 AN/VRC-12 AN/PRC-77	4,6	8
		KY-57/58	2,3	Black and White
HF Radio	Voice	AN/GRC-106	4,6	8
HF Radio Secure	Voice	KG-30 Modem AN/GRC-106	4,6	Black and White
Multichannel Secure	Wire(voice)	KG-27 AN/TRC-145	4,6	8
Digital	MIL-STD-188 or RS-232C/V24	2400 B/S 4800 B/S	4,6 2,3	Black and White

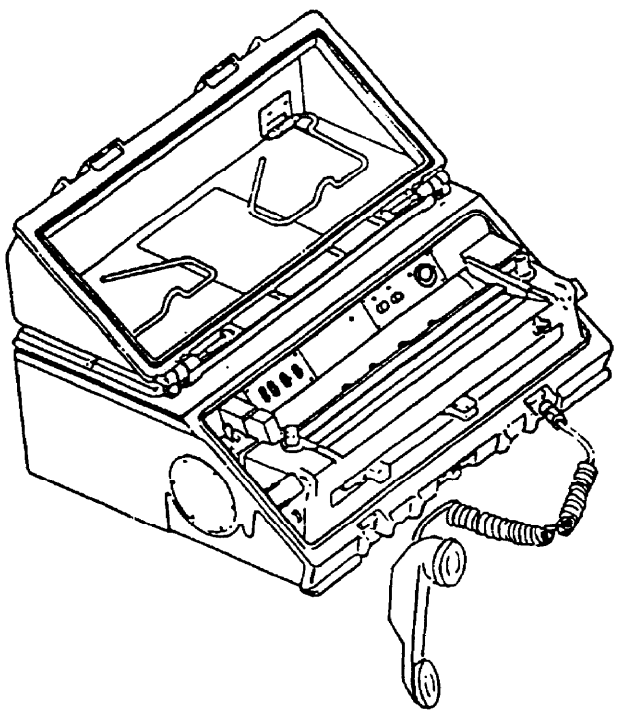

AN/UXC-7
Tactical Digital Facsimile Set

NSN: 5815-01-187-7844

Reference: TM 11-5815-615-10

General Information

The AN/UXC-7 is a lightweight digital facsimile (LDF) set, rugged, waterproof, low power system capable of operating from standard alternating current (AC) and vehicle direct current (DC) power. It enables electronic transmission/reception of typed or handwritten record traffic, view graphs, map overlays, transparencies, and hand-drawn copies in black and white and eight shades of gray. The LDF will operate over existing and proposed voice radios and wire circuits; full digital or analog data/voice capability. Its brief transmission (burst) reduces the chance of detection by the enemy. The LDF set can store data in memory, and then can send in a short, high-speed transmission requiring 7 to 15 seconds to transmit a full page.

Technical Characteristics

Printing	Prints on any paper, using carbon paper transfer. Receives on single or multiple copy sets.
Power Requirements	115/230 V AC, 47/420 Hz; 22/32 V DC
Power Consumption	55 W AC standby; 98 WAC operating 50 W DC standby; 90 W DC operating
Weight	24.9 kg (55 lb) including carrying case

AN/UXC-7
Tactical Digital Facsimile Set

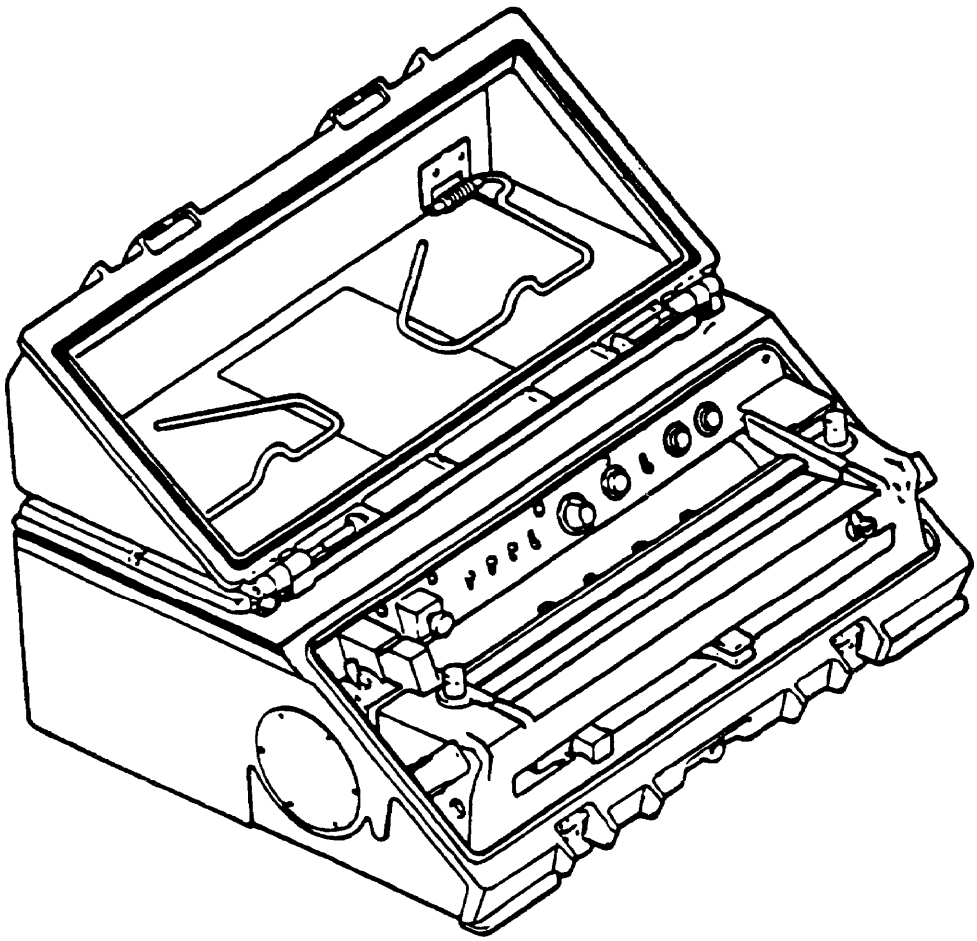

Section III. Computer Equipment

AN/TYQ-33(V)
Tactical Army Combat Service Support Computer System

NSN: Not available

Reference: TM 11-7010-213-12

General Information

The ANTYQ-33(V) system is a small portable computer designed to process data in the field. The Tactical Army Combat Service Support (CSS) Computer System (TACCS) is used to support the CSS missions in supply, maintenance, medical, and personnel areas. TACCS is available in two basic versions and can be expanded to a full cluster with five workstations. Version V1 consists of the master workstation and version V2 consists of V1 plus one remote workstation, The expanded cluster consists of one master workstation and up to five remote workstations.

Major Components

Master Workstation:
- 1 Logic Module
- 1 Monitor
- 1 Keyboard
- 1 Printer
- 3 Transit Cases

Remote Workstation:
- 1 Remote Logic
- 1 Monitor
- 1 Keyboard
- 1 Transit Case

Technical Characteristics

Monitor . . . . . Cathode Ray Tube
Display Format . . . . . 29 1ines of 80 characters
Character Format . . . . . 9 x 12 dot matrix
Character Set . . . . . Soft font (stored in a software file) consisting of 256 characters (including standard ASCII set, graphic symbols, and other selected characters

Keyboard . . . . . 98 keys in 6 groups with QWERTY standard layout

Printer . . . . . Tabletop, bidirectional, dot matrix, impact printer, tractor feed

Logic Module:
Hard Drive . . . . . 85 Mbytes, Disk Type Rigid, non-removable
Flexible Disk Drive . . . . . 1 Mbytes double-sided, double density, 5 1/4 inch floppy; 630,784 bytes formatted

Tape Cartridge Drive . . . . . Cartridge type: 30M-DC600A industry standard, 24 Mbytes (formatted)

Electronics . . . . . Central processor, main memory, data communications, video generator for monitoring FM radio interface or telephone line connections with automatic/manual dial, two modems, (150, 300, 600 or 1,200 Baud), and connection to DSVT. 1 Mbyte RAM, 1 Mbyte RAM each remote.

Power Requirement:
Single Phase . . . . . 120 V AC ± 12 V AC, 60 Hz ± 3 Hz
or 120 V AC ± 22 V AC, 50 Hz ± 2.5 Hz

AN/TYQ-33(V)
Tactical Army Combat Service Support Computer System

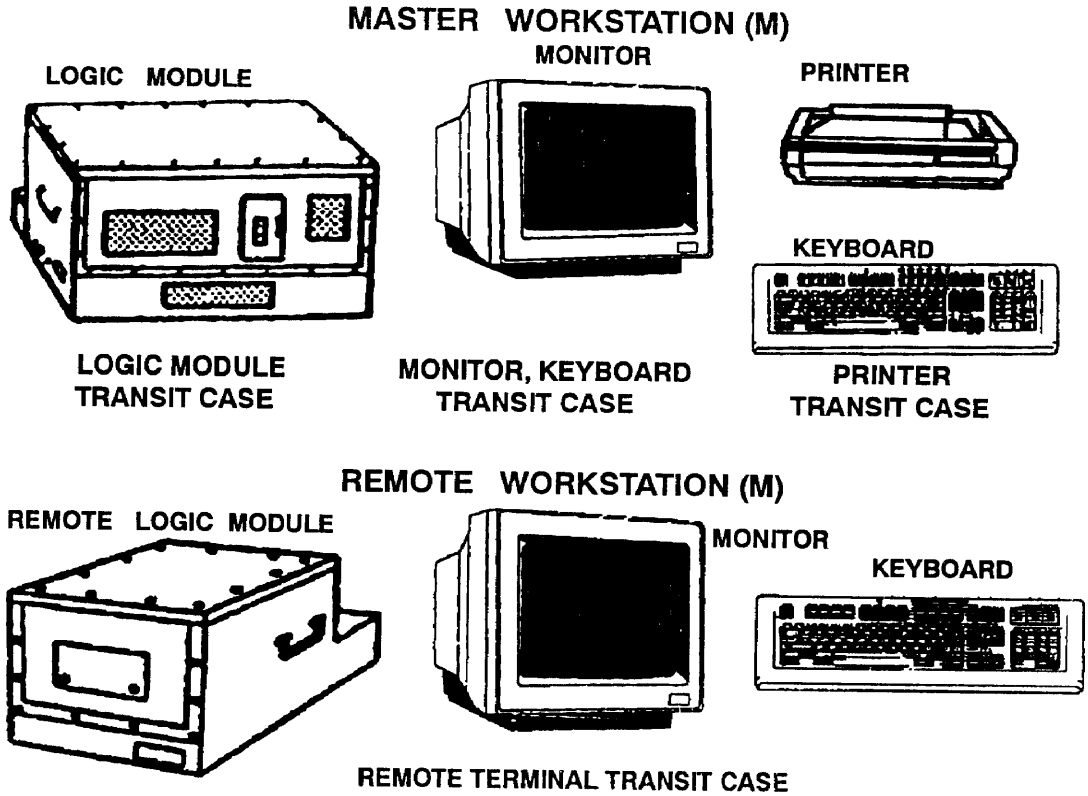

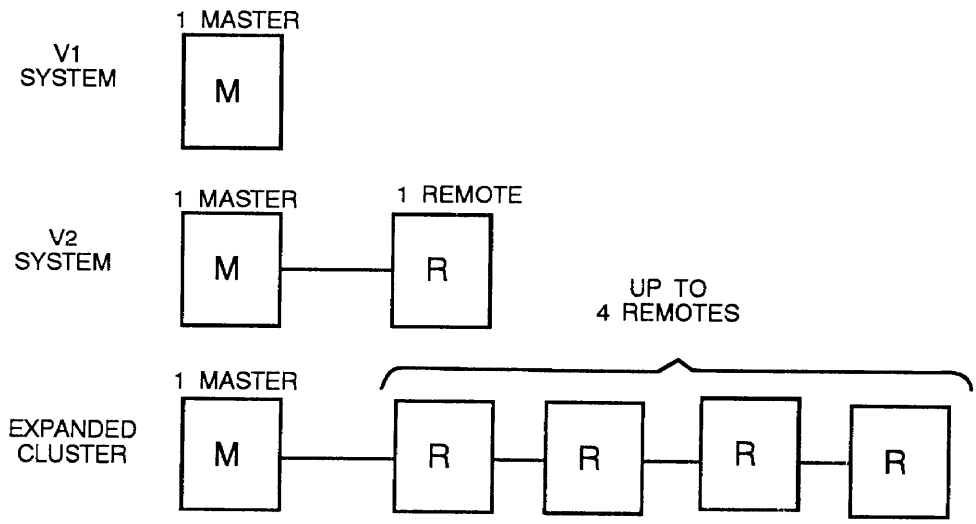

AN/UYQ-43(V)l and AN/UYQ-43(V)2 Tactical Computer Processor

NSN: (V1) 5895-01-211-9821
(V2) 5895-01-246-8276

Reference: TM 11-5895 -1348-12-1

General Information

The AN/UYQ-43(V)l and AN/UYQ-43(V)2 tactical computer processor (TCP) is a portable, general-purpose data processing display, and communications control equipment used to provide automated assistance to the Army maneuver commanders. The TCP can generate new tactical data, or update stored data in memory. The data can be in either alphanumeric, graphic, or combined alphanumeric/graphic form, An equipment interface for two-way communications over wire or radio links with other Army tactical units is provided.

Major Components

1 Display Unit 1P-1512/UYQ
1 Processing Unit Central CP-1712/UYQ
1 Power Conversion Unit PU-787/UYQ
1 Printer TT-815/UYQ
1 Recorder-Disk Tape RO-575/UYQ
1 Interface Unit J-4324/UYQ

Technical Characteristics

Power Source . . . . . 28 V DC or 115/230 V AC
Character Data Rate . . . . . 75, 150, 300, 600, 1,200, 2,400, 4,800, 8,000, 9,600, 16,000, and 32)000 b/s
Memory Media . . . . . Fixed Disk---152 Mbytes
Tape Cassette---67.1 Mbytes
Flexible Disk---36O Kbytes
Display unit . . . . . Color. 48 Lines. 130 Columns max

Technical Characteristics (Cont.)

Weight:

	Weight Each
1 Display Unit IP-1512/UYQ	65.9 kg (1451b)
1 Central Processing Unit CP-1712/UYQ	53.6 kg (118 lb)
1 Power Conversion Unit PU-787/UYQ	70.0 kg (154 lb)
1 Printer TT-815/UYQ	44.5 kg (98 lb)
1 Recorder-Disk/Tape RO-575/UYQ	73.2 kg (161 lb)
1 Interface Unit J-4324/UYQ	55.4 kg (122 lb)
Total Weight	362.6kg (798 lb)

AN/UYQ-43(V)1 and AN/UYQ-43(V)2 Tactical Computer Processor

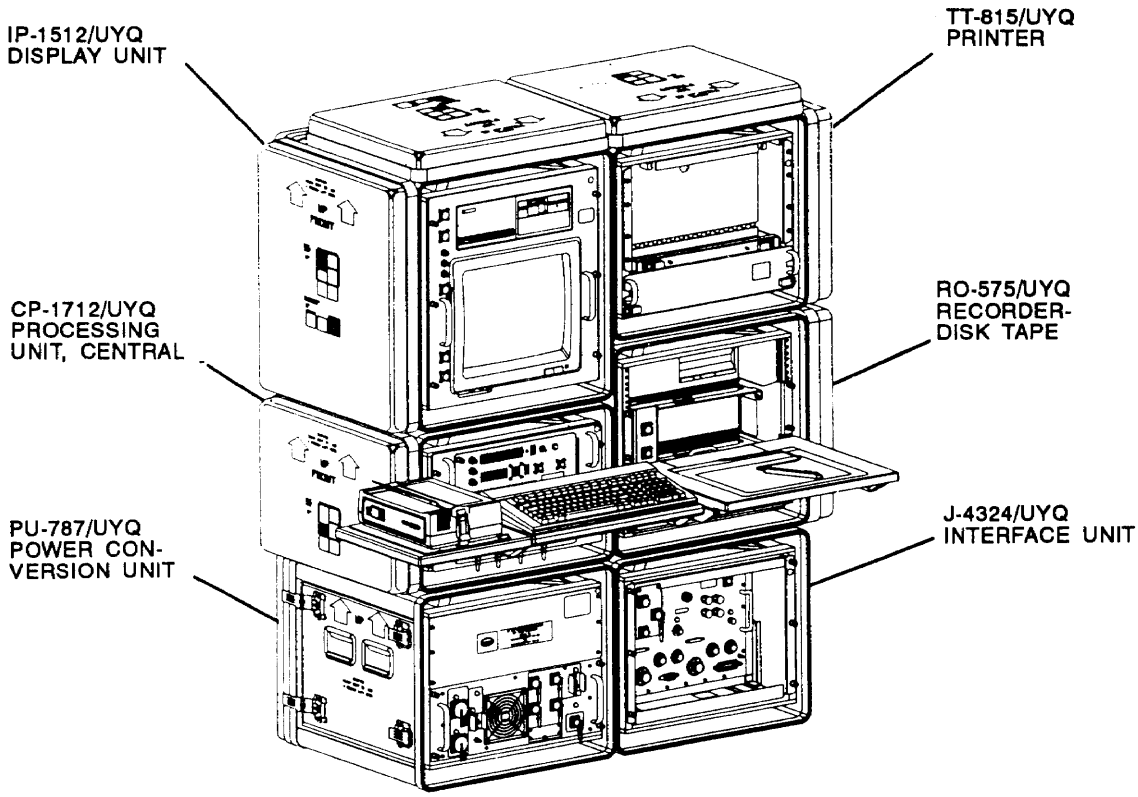

Chapter 3 Multiplex Equipment

	Page
Section I. Time Division Multiplexing Equipment	3-2
AN/FCC-98(V) Multiplexer Set	3-2
MD-1023( )/G Low Speed Cable Driver Modem	3-5
MD-1024( )/G High Speed Cable Driver Modem	3-7
MD-1025( )/G Remote Loop Group Multiplexer/Cable Driver Modem	3-9
MD-1026( )(P)/G Digital Data Group Modem	3-11
MD-1065( )(P)/G (103 Modem) Digital Data Modem	3-13
TD-202/U Multiplexer	3-15
TD-204/U and TD-754/G Multiplexer	3-17
TD-660/G, TD-660A/G and TD-660B/G Multiplexer	3-19
TD-976/G Asynchronous Digital Combiner	3-21
TD-1065/G High Speed Serial Data Buffer	3-23
TD-1069/G Multiplexer	3-25
TD-1233( )/TTC Remote Loop Group Multiplexer	3-27
TD-1234( )/TTC Remote Multiplexer Combiner	3-29
TD-1235( )/TTC Loop Group Multiplexer	3-31
TD-1236( )/G Trunk Group Multiplexer	3-33
TD-1237( )/G Master Group Multiplexer	3-35
TD-1337(V)/G Multiplexer/Demultiplexer	3-37
Section II. Auxiliary Multiplex Equipment	3-39
AN/PTM-7 Telephone Test Set with CX-11230/G or CX-4245/G Special Purpose Electrical Cable and TD-206B/G Pulse Form Restorer	3-39
CV-1548/G and CV-1548A/G Telephone Signal Converters	3-41
TS-3647( )/G Telephone Test Set Cable Orderwire Unit with TD-1218( )/G Pulse Form Restorer (Low Speed) and TD-1219( )/G Pulse Form Restorer (High Speed)	3-43

Section I. Time Division Multiplexing Equipment

AN/FCC-98(V)
Multiplexer Set

NSN: 5820-01-072-0560 (AN/FCC-98(V)1)
5820-01-086-6217 (AN/FCC-98(V)1X)
5820-01-074-5186 (AN/FCC-98(V)2)
5820-01-086-6218 (AN/FCC-98(V)2X)
5820-01-071-6403 (AN/FCC-98(V)3)
5820-01-087-1808 (AN/FCC-98(V)3X)

Reference: TM 11-5805-711-13 (AN/FCC-98(V)1 and (V)1X)
MWO 11-5805 -711-30-1 (AN/FCC-98(V)2, (V)2X, (V)3, and (V)3X)

General Information

The AN/FCC-98(V) uses analog-to-digital (AD) conversion and pulse code modulation (PCM) techniques to multiplex and demultiplex nominal 4 kHz analog VF channels for transmission over digital communications systems. It provides data interweaving by replacing VF channel modules with selected data interleaving modules. It features full-frame acquisition and monitoring and performs AD conversions and time division multiplexing (TDM). This set provides AD conversion on 3-, 4-, 8-, 12-, and 24-channel increments of 24-analog VF channels. Digital data is interweaved into an output bit stream in time slots assigned to replace VF channels. Demultiplexer circuit modules demultiplex received digital data and perform digital-to-analog conversion required to reconstruct the original analog signal. Digital data is extracted from the input data stream and distributed to digital channels which replace VF channels. Built-in test equipment (BITE) is an integral test module that measures, tests, and monitors signals in and out of channel modules and of operation of various internal circuits, It also is used to isolate faulty channel modules and for alignment of replaced modules. Monitor and alarm circuitry give audible and visible alarm indications when there is a loss of frame or timing or failure to receive or transmit data for a nominal 100 milliseconds or more.

Major Components

	(V)	(V)1X	(V)2	(V)2X	(V)3	(V)3X
Electrical Equipment Cabinet:						
CY-7703			1	1	1	1
CY-7786	1	1				
Test Module TS-3693	1	1	1	1	1	1
Transmit-Receive Data Timing Group:						
OB-88			1	1		
OB-89					1	1
OB-91	1	1				
Power Supply Group:						
OP-124 (AC Power Group)	1		1		1	
OP-125 (DC Power Group)		1		1		1
Voice Frequency Channel	1	1	1	1	1	1
Module PL-1411						
Module PL-1412*						
Module PL-1413*						
Module PL-1414*						

*** Issued only if required for operations.**

Technical Characteristics

Power Requirement . . . . . 117 or 230 V AC ± 10%, 47 to 420 Hz, single phase, or -44 to -56 V DC, +4 V DC, -8 V DC
Power Consumption . . . . . 130 W
Weight . . . . . 45.4 kg (100 lb)
Channels . . . . . 24, full duplex
Voice Frequency Response . . . . . 180 to 3450 Hz

AN/FCC-98(V) Multiplexer Set

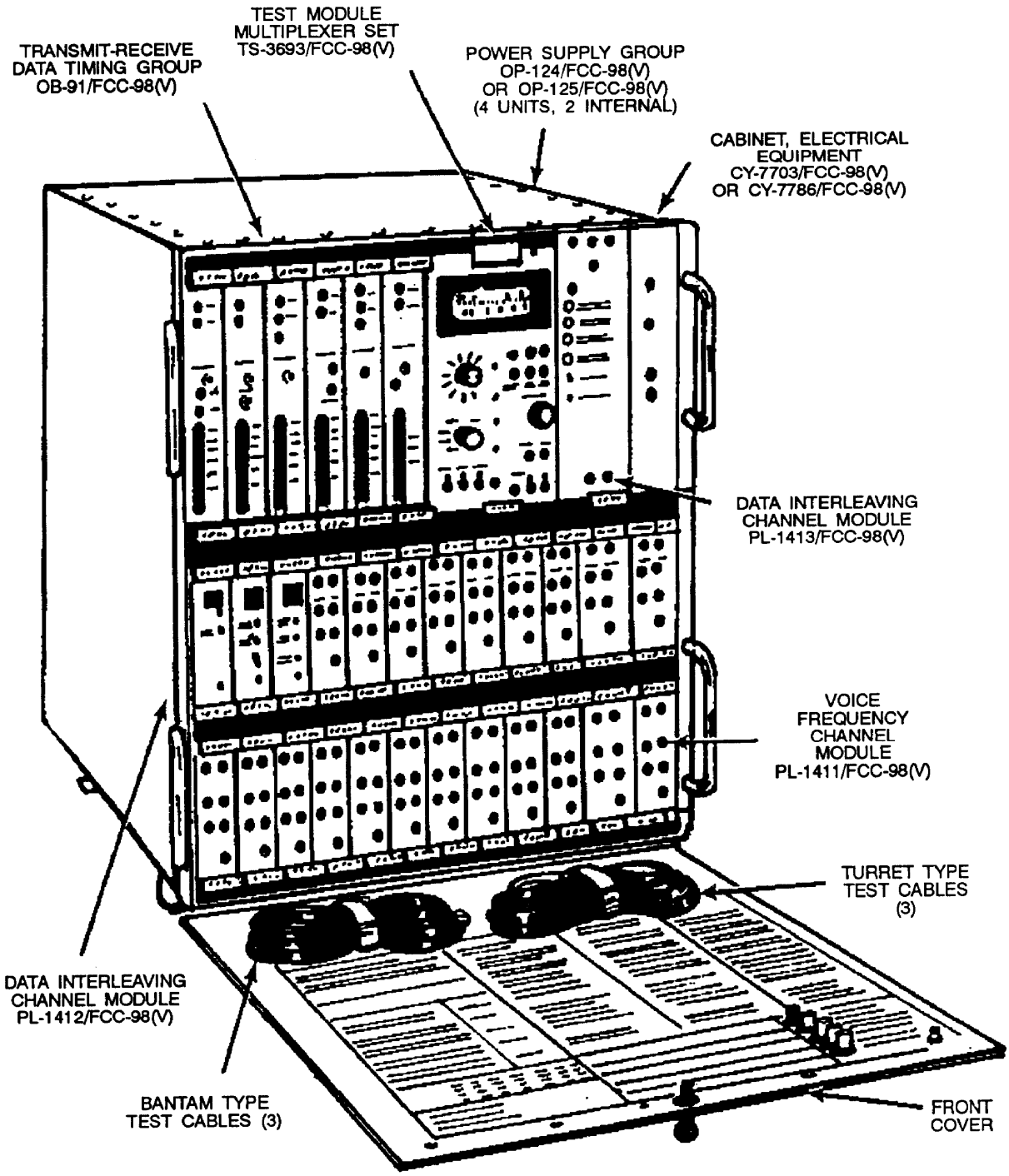

MD-1023( )/G
Low Speed Cable Driver Modem

NSN: 5820-01-0145-4940

Reference: TM 11-505-699-12

General Information

The MD-1023( )/G is a member of the digital group multiplexer (DGM) family. The low speed cable driver modem (LSCDM) is used as an extension facility to provide repeater cable transmissions. It replaces TD-754. The LSCDM accepts nonreturn to zero (NRZ) group input from 72 to 2,048 kb/s and transmits on cable as conditioned diphase group outputs at 2,304 kb/s and vice versa. It also provides power for the unattended low speed pulse restorer (LSPR) up to 64 km (40 mi). The LSCDM provides full duplex digital and analog orderwire facilities. It is used in conjunction with the loop group multiplexer (LGM), trunk group multiplexer (TGM), LSPR, cable orderwire unit (COU), trunk encryption device (TED), master group multiplexer (MGM), communications nodal control element (CNCE), LSCDM, group modem (GM), remote loop group multiplexer/cable driver (RLGM/CD), and shortwave wideband radio (SRWBR).

Technical Characteristics

Number of Groups 1
Cable . . . . . CX-11230 or CX-4245/G coax
Maximum Distance . . . . . 1.6 km (1.0 mi) without restorers
64.4 km (40 mi) with restorers
Orderwire Transmission . . . . . 1.6 km (1.0 mi)
Input Power Voltage . . . . . 115 V AC ± 10%, 47 to 63 Hz or 22 to 32 V DC
Power Consumption . . . . . 92 W
Size . . . . . 21.6 cm high by 30.5 cm deep by 43.8 cm wide
(8.5 in by 12 in by 17.25 in)
Weight . . . . . 16.8 kg (37 lb)

MD-1023( )/G
Low Speed Cable Driver Modem

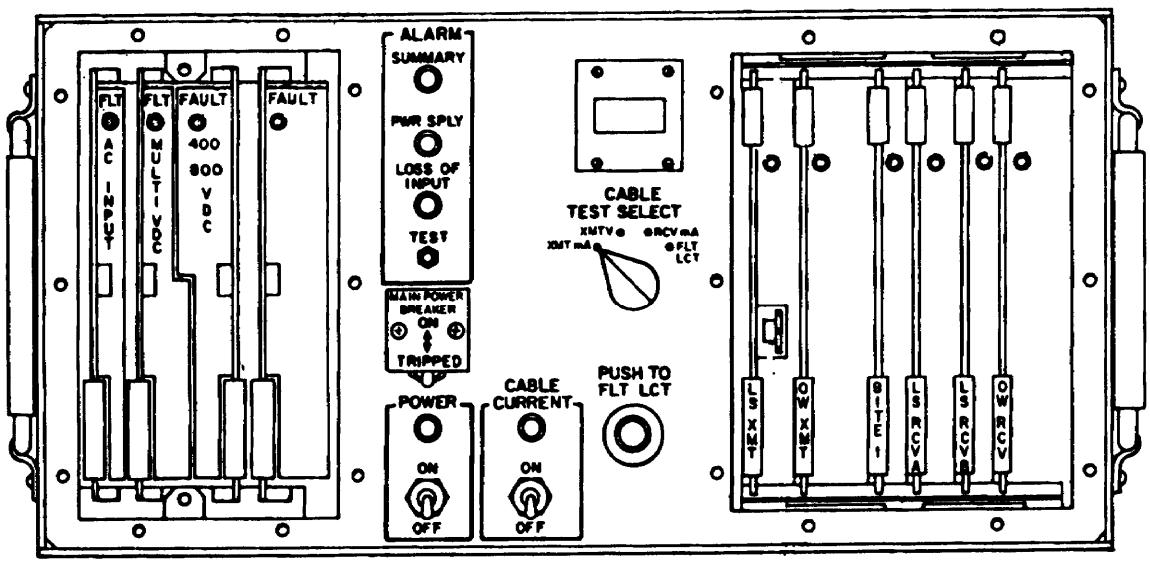

MD-1024()/G
High Speed Cable Driver Modem

NSN: 5820-01-145-4902

Reference: TM 11-5805-700-24P

General Information

The MD-1024( )/G is a member of the DGM family. It is used in nodal radio facilities to provide repeat cable transmissions. The high speed cable driver modem (HSCDM) accepts input master group rates of 4,096 and 4,608 kb/s; 9.36 and 18.72 rob/s and converts them to conditioned diphase signals at fixed output rates of 19.2 rob/s. It also provides power for the high speed pulse restorer (HSPR) in a repeater cable system up to 8 km (5 mi). The HSCDM is used in conjunction with HSPR, MGM, TGM, COU, TED, SRWBR, and CNCE.

Technical Characteristics

Number of Groups (or Master group) 1
Cable Side Interface:
Modulation . . . . . Conditioned diphase
Cable . . . . . CX-11230 or CX-4245/G coax
Maximum Distance . . . . . 8 km (.5 mi) without restorers, 8 km (5.0 mi) with restorers
Orderwire Transmission . . . . . 1.6 km (1.0 mi)
Input Power Voltage . . . . . 115 V AC ± 10%, 47 to 63 Hz
Power Consumption . . . . . 110 W
Size . . . . . 21.6 cm high by 30.5 cm deep by 43.8 cm wide (8.5 in by 12 in by 17.25 in)

MD-1024( )/G
High Speed Cable Driver Modem

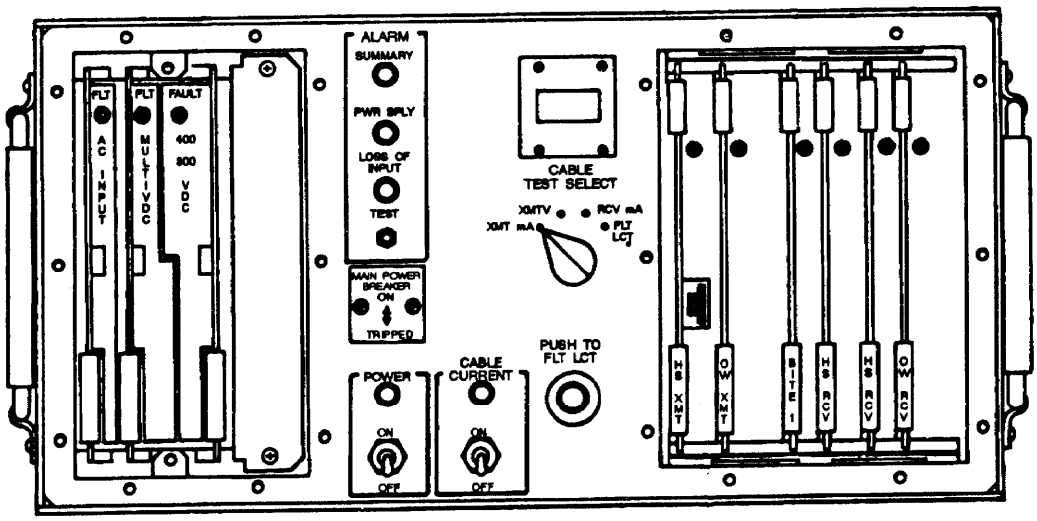

MD-1025()/G
Remote Loop Group Multiplexer/ Cable Driver Modem

NSN: 5820-01-145-4905

Reference: TM 11-5805-704-12

General Information

The MD-1025( )/G is a member of the DGM family. It provides interface between the RLGM, TGM, MGM, and AN/TTC-39A, Automatic Telephone Central Office. The RLGM/CD converts 72 or 144 kb/s NRZ data to conditioned diphase for transmission over CX-11230 or 4245/G cable at lengths up to 3.2 km (2 mi) without repeaters. It contains two full duplex moderns and provides power via cable to operate two RLGMs and their associated DSVT. It is used in conjunction with the RLGM, MGM, TGM, and COU.

Technical Characteristics

Number of Groups . . . . . Max 2
Cable Side Interface:
Cable . . . . . CX-11230 or CX-4245/G coax
Maximum Distance . . . . . 3.2km(2mi)
Voltage supplied to the TD-1233/TTC . . . . . 180 V DC
Input Power Voltage . . . . . 115 V AC ± 10%, 47 to 440 Hz
Power Consumption . . . . . 173 W
Size . . . . . 21.6 cm high by 30.5 cm deep by 43.8 cm wide (8.5 in by 12 in by 17.25 in)
Weight . . . . . 15 kg (33 lb)

MD-1025( )/G
Remote Loop Group Multiplexer/ Cable Driver Modem

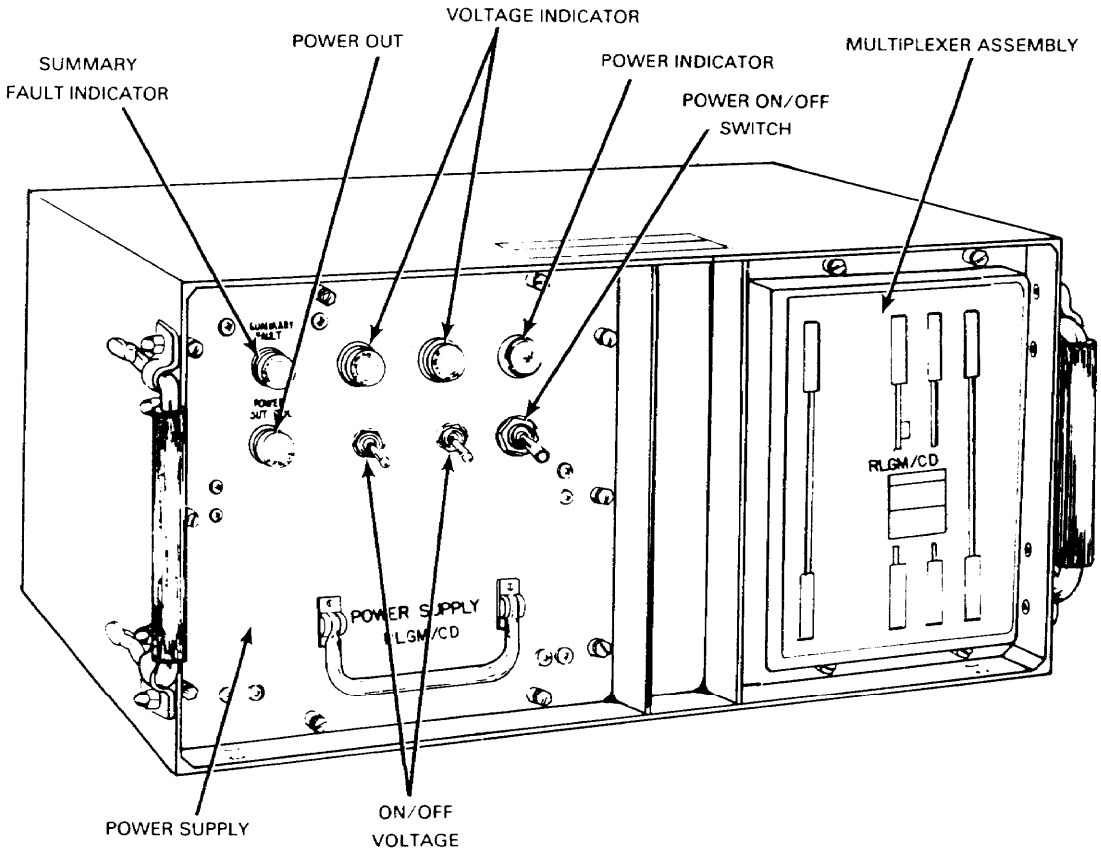

MD-1026()(P)/G
Digital Data Group Modem

NSN: 5820-01-145-4945

Reference: TM 11-5805-705-12

General Information

The MD-1026( )/(P)/G is a part of the DGM family. It has three module types that perform three different functions. These functions convert balanced NRZ group signals and timing to conditioned diphase, dipulse, or bipolar for transmission on unbalanced coaxial. The GM will contain up to four GM modules. The GM converts balanced NRZ group signals from sheltered DGM functions into conditioned diphase, conditioned dipulse, and bipolar signals. Conditioned diphase signals are for operation with TRI-TAC transmission equipments. Conditioned dipulse signals are for interoperation with Multiplexer TD-754 and the Army Tactical Communications Systems (ATACS). Bipolar signals are for interoperation with Digital Combiner Asynchronous TD-976 and the ATACS. The GM provides secure and nonsecure orderwire operation for telemetry, data, and voice.

Technical Characteristics

Number of Groups . . . . . Max 6
Bit Rates:
  Conditioned Diphase . . . . . 128, 256, 512, 1,024, 15.36, 2,048, 4,096 kb/s
    72, 144, 288, 576 1)152, 2,304, 4,608 kb/s
  Dipulse . . . . . 288, 576, 1,152, 2,304 kb/s
  Bipolar . . . . . 1,536.2 kb/s
Equipment Side Interface:
  Signals . . . . . NRZ data plus square wave timing
  Cable . . . . . RG-108, 30.48 m (100 ft)
Cable Side Interface
  Cable . . . . . CX-11230 or CX-4245/G coax
  Maximum Distance . . . . . Conditioned diphase, 3.2 km (2 mi)
    Dipulse, 1.6 km (1 mi)
    Bipolar, 0.8 km (.5 mi)
Orderwires (Per Group):
  Conditioned Diphase . . . . . 2 kb/s and 16, 3.2 km (2.0 mi) or
    1 analog 1.6 km (1.0 mi)

Technical Characteristics (Cont.)

Dipulse	1 analog, 0.8 km (.5 mi)
Bipolar	1 analog, 0.8 km (.5 mi)
Input Power Voltage	115 V AC ± 10%, 47.5 to 440 Hz
Power Consumption	90 W
Size	21.6 cm high by 30.5 cm deep by 43.8 cm wide (8.5 in by 12 in by 17.25 in)
Weight	16 kg (35.2 lb)

MD-1026( )(P)/G
Digital Data Group Modem

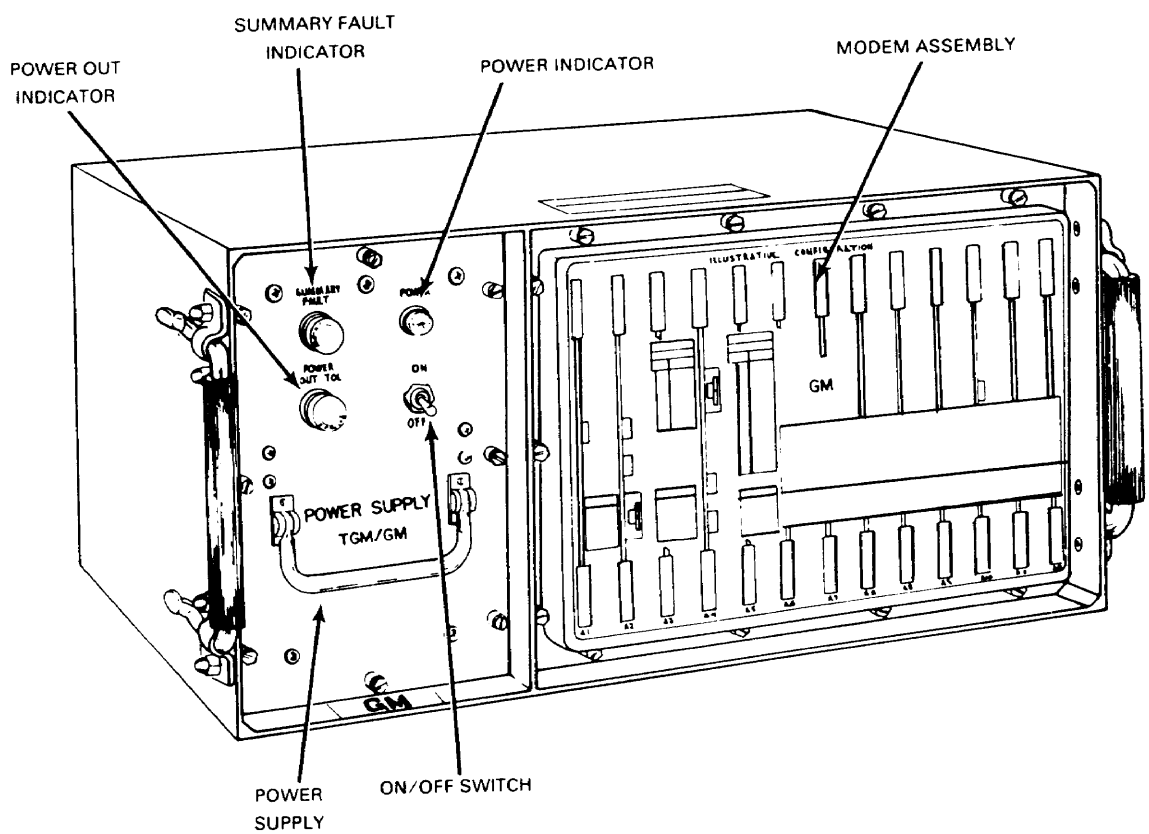

MD-1065( )(P)/G (103 Modem) Digital Data Modem

NSN: 5820-01-145-8507

Reference: TM 11-5805-725-12

General Information

The MD-1065()(P)/G modem is required to interface the DGM equipment with the AN/GRC-103 (Bands I through IV) radio and to accommodate the TRI-TAC digital voice orderwire (DVOW) and telemetry systems. Functionally, the MD-1065( )(P)/G combines the encrypted group traffic and encrypted orderwires for transmission over the AN/GRC-103 radio system. The MD-10650(P)/G will contain up to three modem modules.

Technical Characteristics

Power Input . . . . . 115 V AC, 60 Hz
Power Consumption . . . . . 60 W
Weight . . . . . 15 kg (33 lb)

NOTE 1: Distance between MD-1065( )(P)/G and another device must not exceed 30.5 m (100 ft).

MD-1065( )(P)/G (103 Modem) Digital Data Modem

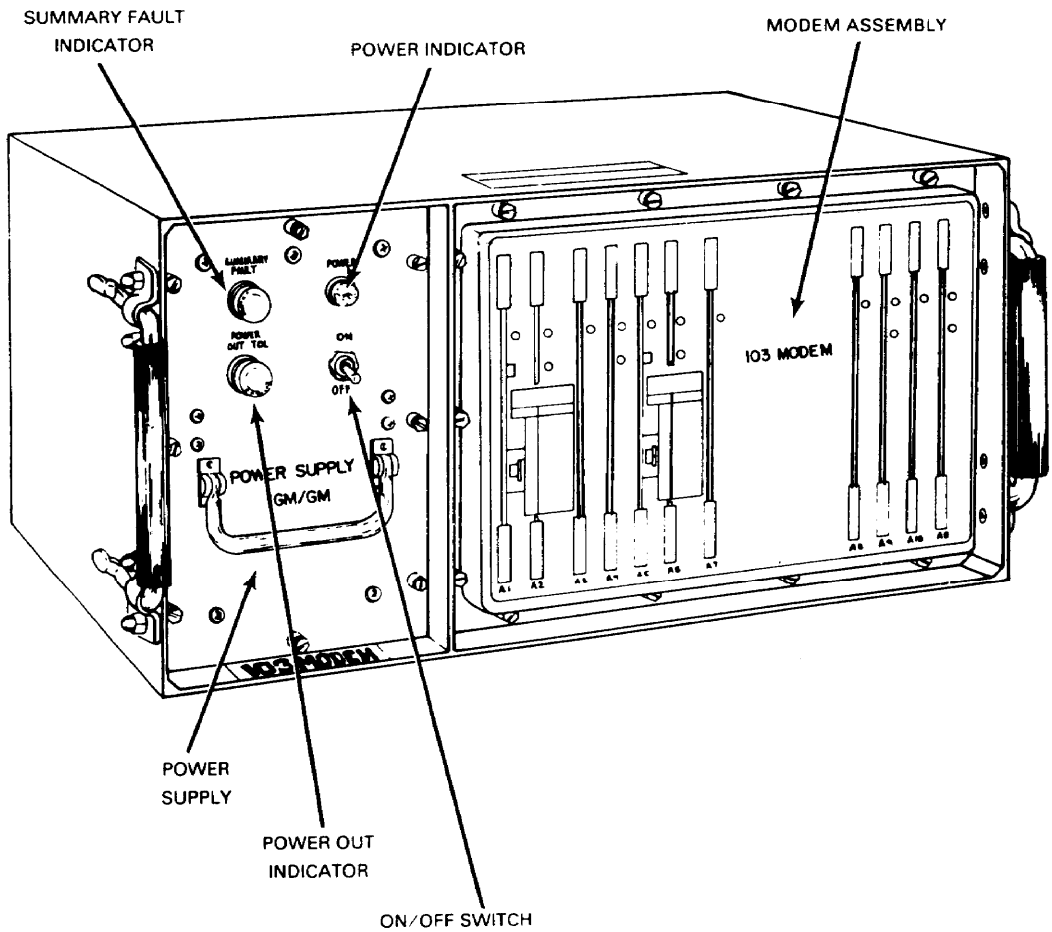

TD-202/U
Multiplexer

NSN: 5805-00-884-2176

Reference: TM 11-5805-367-12

General Information

The TD-202/U is a 12- or 24-channel PCM radio transmission interface unit. The transmit section accepts TDM/PCM outputs from one or two TD-352/Us or a TD-204/U, or from another TD-202/U. It processes the input/output (I/O) into compatible output for radio transmission. The receiving section accepts a PCM signal from the radio receiver and processes it for interface with another TD-202, TD-204, or one or more TD-352/Us.

Technical Characteristics

Number of Channel	12 or 24
Type of Operation	Full duplex
Type of Multiplexing	Time division
Type of Modulation	Pulse code
Required Bandwidth	240 kHz
Pulse Rate:	
12-channel	576 kHz
24-channel	1152kHz
Loop Impedance	91 ohms, send and receive
Line Impedance	51 ohms, send and receive
Power Requirement	109 to 121 V AC, 47 to 63 Hz
Power Consumption	30 W
Weight	22.6 kg (50 lb)

TD-202/U
Multiplexer

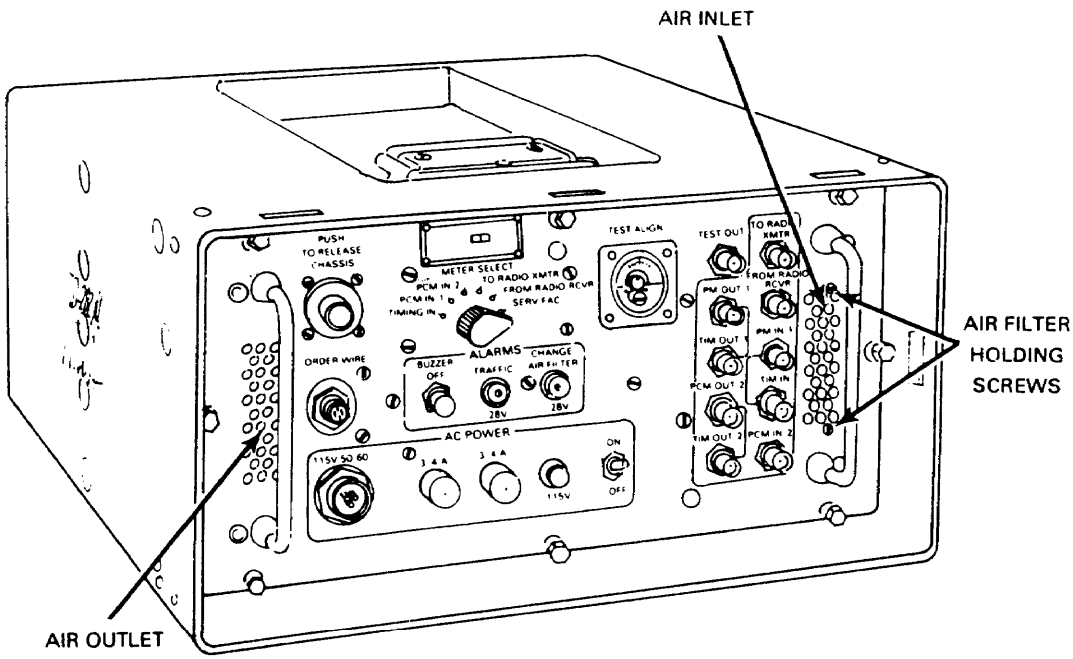

TD-204/U and TD-754/G Multiplexers

NSN: 5805-00-900-8200 (TD-204/U)
5820-00-930-8078 (TD-754/G)

Reference: TM 11-5805-367-12 (TD-204/U)
TM 11-5805-383-12 (TD-754/G)

General Information

These cable interface units permit processing of *6-, 12-, 24-, or 48-channel multiplexing for transmission via cable. This unit processes signals from a video cable for transmission over a radio system via the TD-202/U (radio interface unit). Two of these (like items) may be crosshatched and used as a cable repeater. The TD-204/U and the TD-754/G may be used to provide power for as many as 39 pulse form restorers in the cable link.

Technical Characteristics

Number of Channels . . . . . *6, 12, 24, or 48
Type of Operation . . . . . Full duplex
Type of Multiplexing . . . . . Time division
Type of Modulation . . . . . Pulse code
Pulse Rate Input:
*6-channel . . . . . 288 kHz
12-channel . . . . . 576 kHz
24-channel . . . . . 1152 kHz
48-channel . . . . . 2304 kHz
Loop Impedance . . . . . 91 ohms, send and receive
Line Impedance . . . . . 62 ohms
Power Requirement . . . . . 109 to 121 V AC, 47 to 63 Hz
Power Consumption:
TD-204/U . . . . . 62 W
TD-754/G . . . . . 35 W
Weight:
TD-204/U . . . . . 25.37 kg (56 lb)
TD-754/G . . . . . 20.38 kg (45 lb)
Cable . . . . . CX-11230 or CX-4245/G coax

*** Using TD-660 in 6-channel mode of operation.**

TD-204/U and TD-754/G Multiplexers

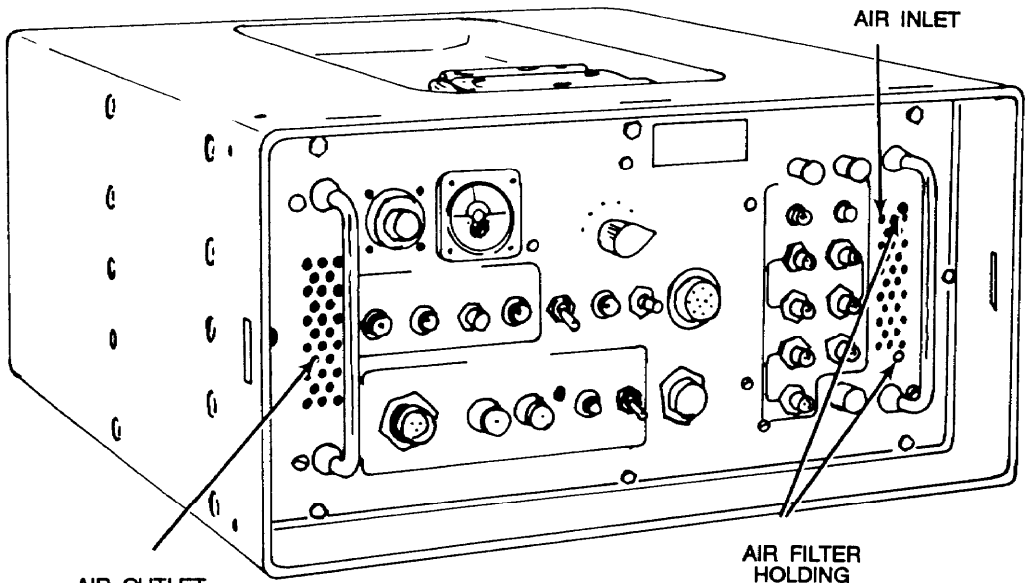

TD-204/U

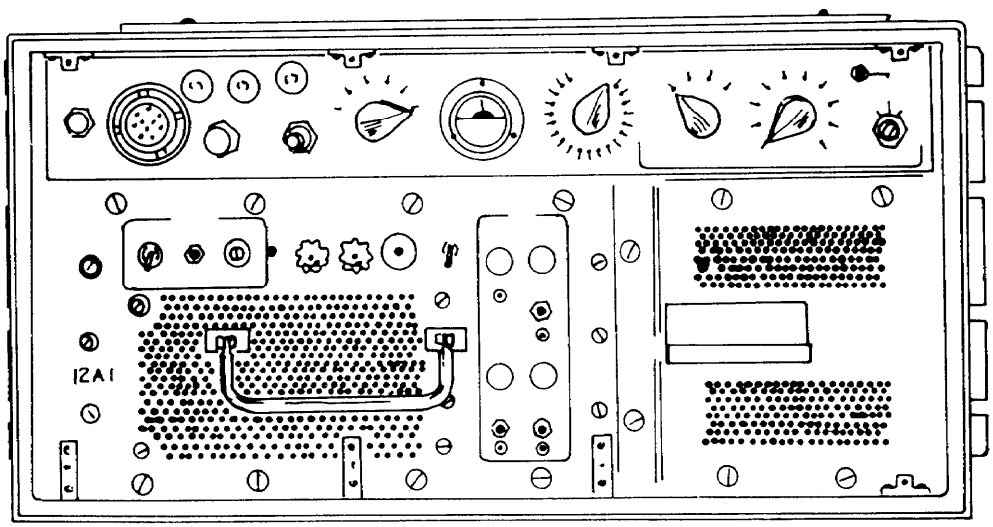

TD-754/G

TD-660/G, TD-660A/G and TD-660B/G Multiplexers

NSN: 5805-00-930-8079 (TD-660/G)
5805-00-928-3382 (TD-660A/G)
5805-00-928-3382 (TD-660B/G)

Reference: TM 11-5805-382-12

General Information

The TD-660/G converts six or twelve 4-wire VF channels to a TDM/PCM signal and vice versa. The TD-660/G is used in nonsecure communications systems and is being replaced by attrition with the TD-660A/G or TD-660B/G. All three models are electrically and physically interchangeable, except when used with COMSEC equipment. The TD-660/AG and TD-660B/G have additional shielding and filtering provisions and are equipped with coaxial cable connectors on the rear panel for connection to the security equipment.

Technical Characteristics

Number of Channels ..... 6 or 12
Type of Operation ..... 4-wire, full duplex
Type of Multiplexing ..... Time division
Type of Modulation ..... Pulse code
Channel Bandwidth ..... 300 to 3500 Hz
Pulse Rate:
6-channel ..... 288 kHz
12-channel ..... 576 kHz
Loop Impedance ..... 600 ohms, send and receive
Line Impedance ..... 900 ohms, send and receive
Power Requirement ..... 109 to 121 V AC, 50 or 60 Hz
Power Consumption ..... 45 W
Weight ..... 22.2 kg (49 lb)

TD-660/G
Multiplexer

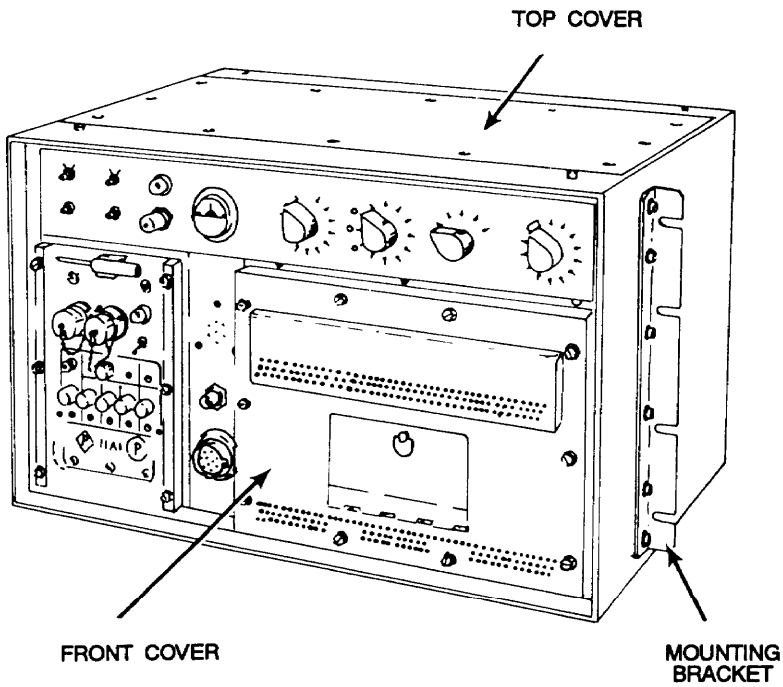

TD-976/G
Asynchronous Digital Combiner

NSN: 7025-01-048-9678

Reference: TM 11-7025-202-12

General Information

The TD-976/G provides the capability to combine the 12-channel outputs of various multiplexer into a single 48/96-channel super group for transmission over a cable system to another TD-976/G or to radio set AN/GRC-144. It also provides the power for cable systems up to 8 km (5 mi) long and a fault location system to determine the defective restorer in the cable system.

Technical Characteristics

Number of Channels	Eight 12-channel groups
Type of Operation	4-wire
Type of Multiplexing	Time division
Type of Modulation	Pulse code
Pulse Rate	4,9152 megabits
Loop Impedance	91 ohms
Line Impedance	56 ohms
Power Requirement	15 V AC, 50 or 60 Hz
Weight	34 kg (75 lb)

TD-976/G
Asynchronous Digital Combiner

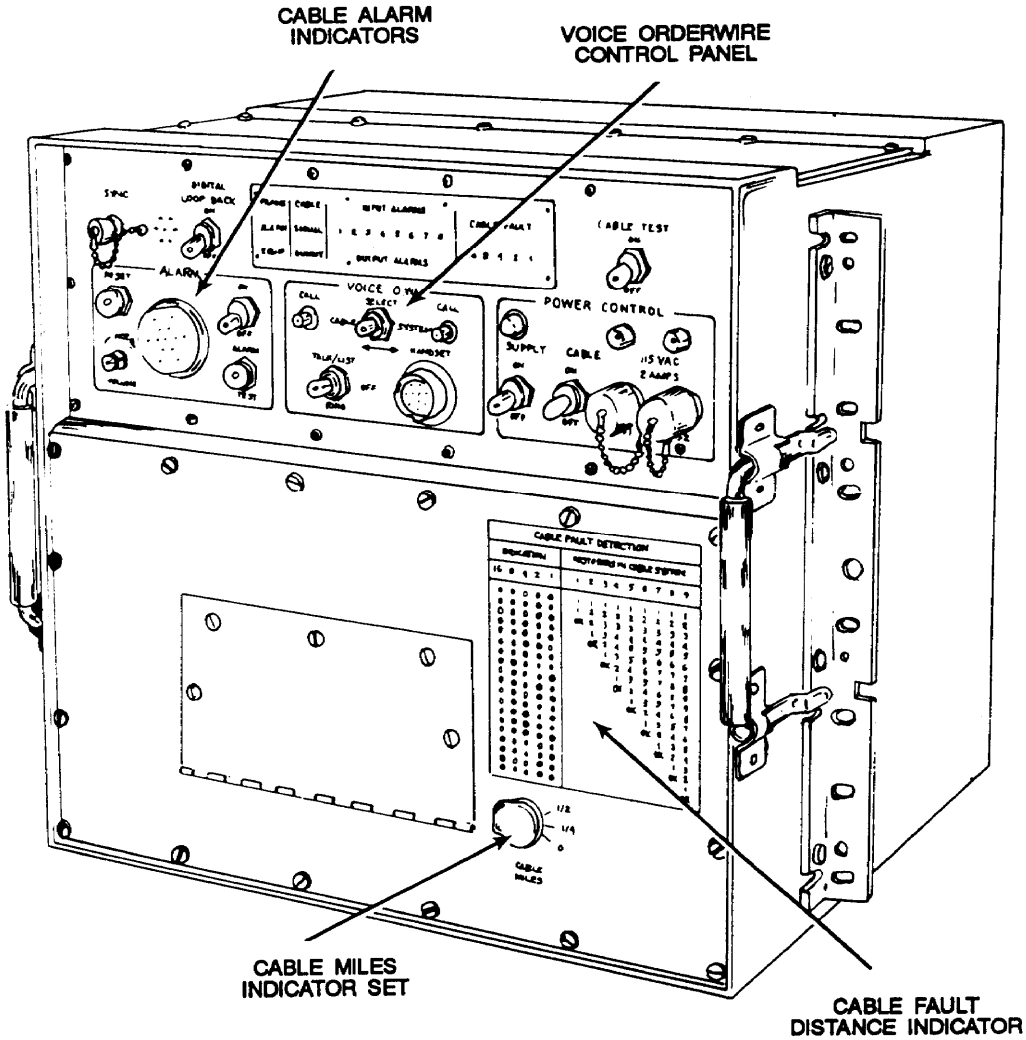

TD-1065/G
High Speed Serial Data Buffer

NSN: 5805-01-028-8364

Reference: TM 11-5805-637-12

General Information

The TD-1065/G can insert and remove digital data from the 576-kilobit stream of Multiplexer TD-660/G or TD-352/U. The TD-1065/G senses if the input to a channel is analog or digital and switches analog signals to the TD-660/G or TD-352/U. If the input to the channel is digital (for example, TD-1069), the TD-1065/G processes it and inserts the signal in the PCM bit stream in the position normally occupied by the same numbered audio channel of the multiplexer.

Technical Characteristics

Number of Channels	12
Type of Operation	4-wire
Type of Multiplexing	Time division
Type of Modulation	Pulse code
Digital Input Rates	16 or 32 kb/s
Pulse Rate	576 kHz
Loop Impedance	600 ohms
Line Impedance	91 ohms
Power Requirement	115 V AC, 50 or 60 Hz
Power Consumption	30 W
Weight	18 kg (39 lb)

TD-1065/G
High Speed Serial Data Buffer

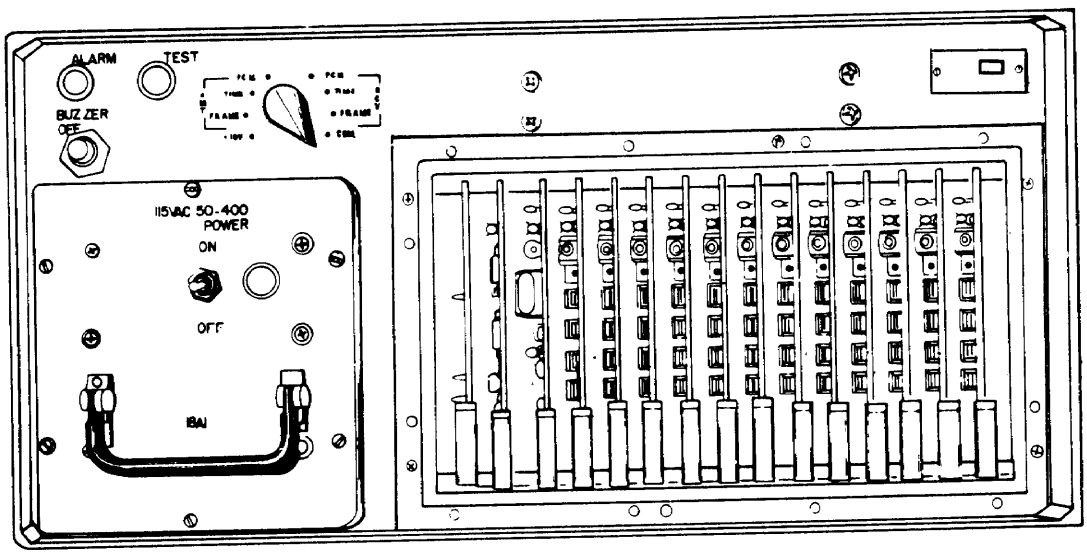

TD-1069/G
Multiplexer

NSN: 5805-01-028-8425

Reference: TM 11-5805-638-12

General Information

The TD-1069/G will multiplex and demultiplex up to 12 separate digital data and/or teletypewriter traffic streams into a serial bit stream whose rate is 32 kb/s. The sum of all data/teletypewriter streams applied to the input channels of the time division digital multiplexer (TDDM) cannot exceed 30 kb/s. The TDDM provides subscribers with the means to multiplex digital data and/or teletypewriter traffic for transmission over cable or through the ATACS trunking facilities.

Technical Characteristics

Number of Channels . . . . . Max 12
Channel Rates:
  Data . . . . . 600, 1,200, 2,400, 4,8009,600 b/s
  Teletypewriter . . . . . 45.5, 50, 75, 150 b/s
Type of Operation 4-wire
Type of Multiplexing . . . . . Time division
Type of Modulation . . . . . Conditioned diphase
Power Requirement . . . . . 115 V AC, 50 to 400 Hz
Power Consumption . . . . . 125 W
Weight . . . . . 27.3 kg (60 lb)

TD-1069/G
Multiplexer

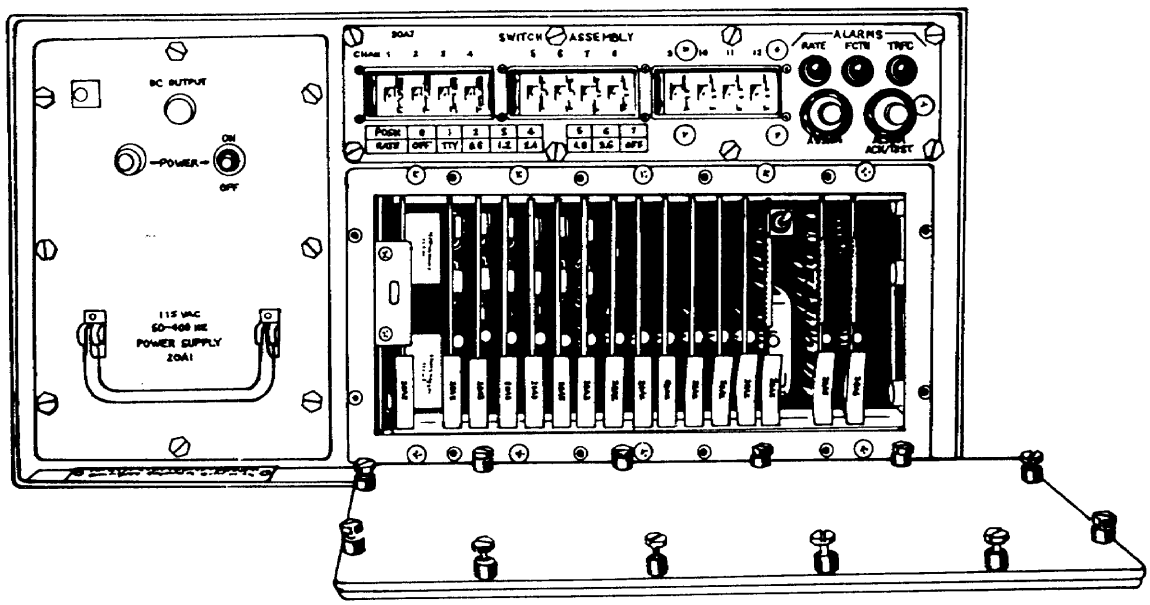

TD-1233()/TTC
Remote Loop Group Multiplexer

NSN: 5820-01-145-2462

Reference: TM 11-5805-706-12

General Information

The TD-1233( )/TTC is a member of the DGM family. It provides digital and analog subscribers of military facilities access to the tactical automatic digital network. The RLGM multiplexes up to four 16 or 32 kb/s (four-wire) digital channels into a single group output of 72 or 144 kb/s. Digital loop modems are provided on each channel to transmit and receive conditioned diphase signals via field wire to interconnect DSVTs or DNVTs. An analog applique unit (AAU) card also maybe used as a substitute for digital modem cards to provide AD conversion of four-wire analog telephones. A modem on the group side allows transmission of conditional diphase signals via coaxial cable to RMC, GM, or RLGM/CD units. Power for the RLGM is provided locally or from the interconnecting RMC or RLGM/CD. The RLGM provides power to each interconnecting DSVT and DNVT. The RLGM is used in conjunction with the RLGM/CD, remote multiplexer combiner (RMC), GM, COU, DSVT, and DNVT.

Technical Characteristics

Number of Digital Loops . . . . . Max 4
Field Wire . . . . . WF-16, 3.2 km (2 mi)
Cable Interface . . . . . CX-11.230/G or CX-4245/G coax
Input Power Voltage . . . . . 115 V AC ± 10%, 47 to 440 Hz or 22 to 32 V DC, or 180 V DC (through coax cable)
Power Consumption . . . . . 40 W
Power Feed to Subscriber Set . . . . . 55 V DC
Size . . . . . 25.1 cm high by 45 cm deep by 48 cm wide (9.9 in by 17.75 in by 18.9 in wide)
Weight . . . . . 17.2 kg (37.8 lb)

TD-1233( )/TTC
Remote Loop Group Multiplexer

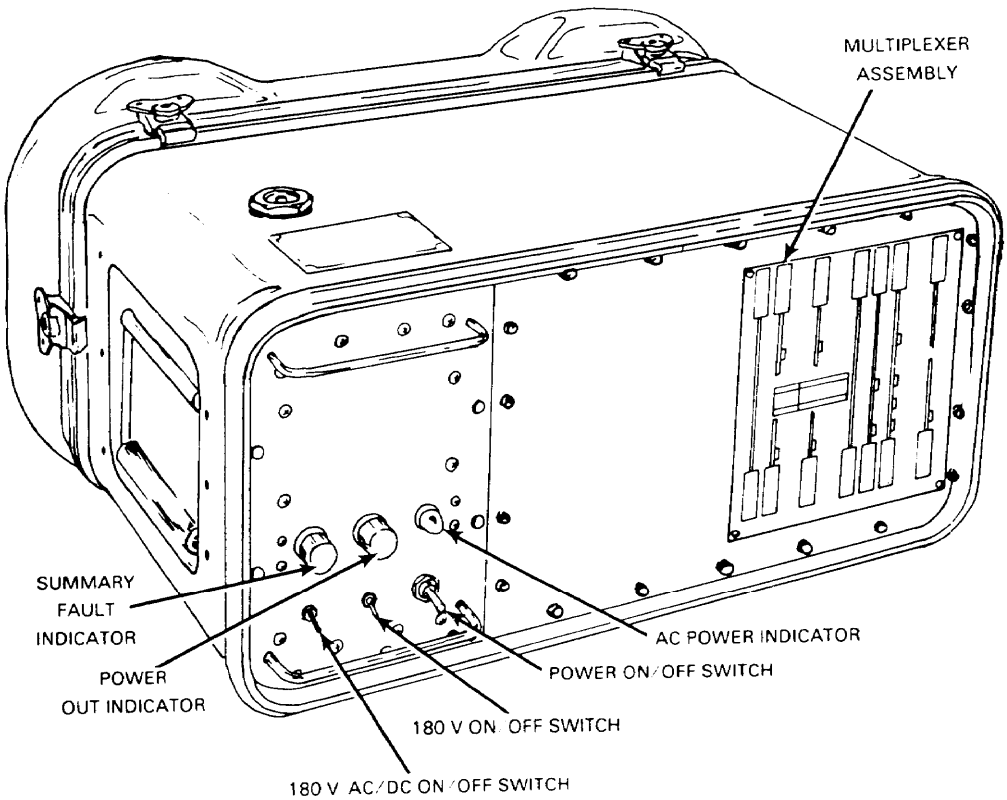

TD-1234()/TTC
Remote Multiplexer Combiner

NSN: 5820-01-145-2458

Reference: TM 11-5805-707-12

General Information

The TD-1234( )/TTC is a member of the DGM family. It provides digital and analog subscribers of military facilities access to the tactical automatic digital network. The RMC combines up to eight 16/32 kb/s loops with a group from an RLGM or another RMC into an output group rate from 128 kb/s to 576 b/s. An AAU card also may be used as a substitute for digital modem cards to provide AD conversion of four-wire analog telephones. It also provides transmission of a maintenance orderwire. The RMC is powered locally and in turn provides power to interconnecting DNVT/DSVT units and RLGM. The RMC is used in conjunction with the GM, RLGM, COU, and DSVT.

Technical Characteristics

Input Interface:
- Loops 8
- Field Wire . . . . . WF-16, 3.2 km (2 mi)
- Group (Modulation) . . . . . Conditioned diphase
- Group (Cable) . . . . . CX-11230 or CX-4245/G coax, 3.2 km (2.0 mi) max

Output Group Rate . . . . . 128, 144, 256, 288, 512, or 576 kb/s
Power Requirement . . . . . 115 V AC, 47 to 440 Hz ± 10% or 22 to 32 V DC
Power Consumption . . . . . 140 W
Power Provided to Loop Instruments
- DSVT, DNVT . . . . . 56 V DC

TD-1234( )/TTC
Remote Multiplexer Combiner

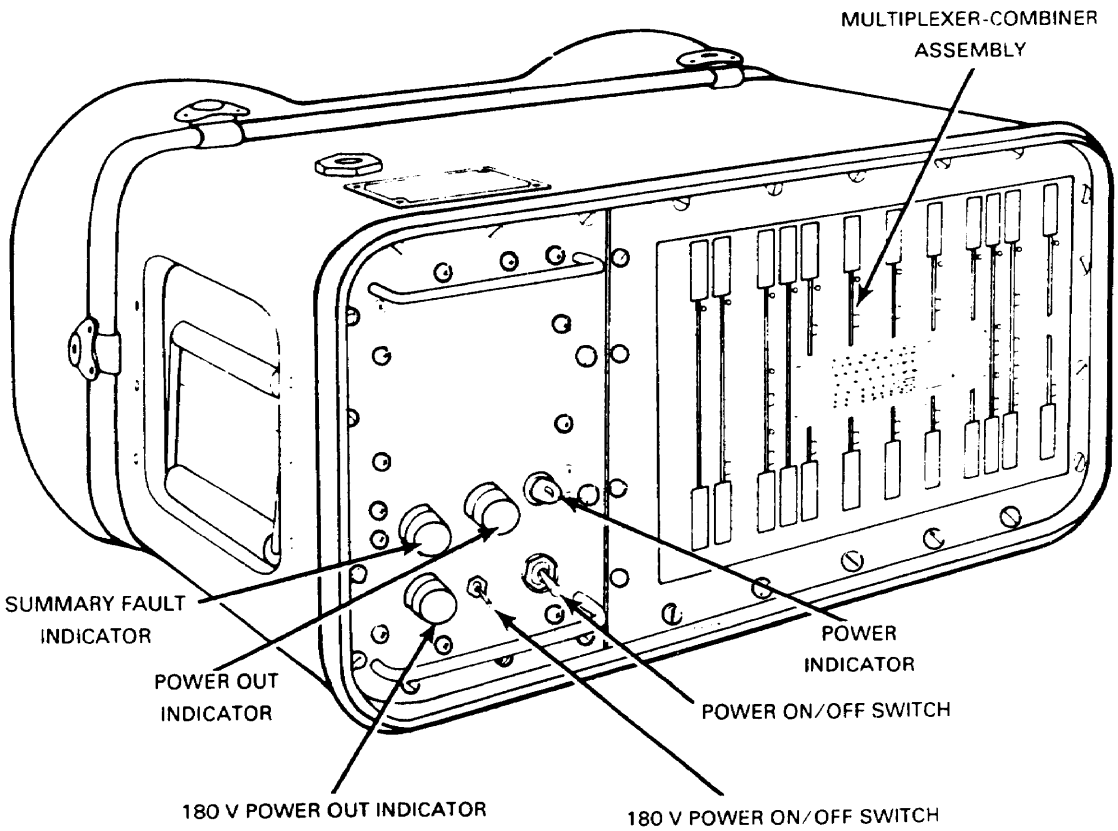

TD-1235()/TTC
Loop Group Multiplexer

NSN: 5820-01-145-2460

Reference: TM 11-5805-696-12

General Information

The TD-1235( )/TTC is a member of the DGM family. It provides subscribers of military extension facilities access to modern military automatic switches and digital systems and vice versa. This unit time division multiplexes/demultiplexes 7-, 8-, 15-, or 16-digital subscriber channels (16 or 32 kb/s) into an output group of 256, 288, 512, or 576 kb/s depending on the type and mix of input rates. One channel is designated overhead. Modulation is conditioned diphase, NRZ balanced. The LGM also can handle four-wire analog channels when its internal digital loop modem is replaced with an AAU. The LGM is used in conjunction with the TGM, MGM, GM, LSCDM, DSVT, and TED. It provides power via field wire to the DSVT/DNVT.

Technical Characteristics

Number of Channels . . . . . 7, 8,15, or 16
Channel Interface:
  Modulation . . . . . Conditioned diphase
  Field Wire . . . . . WF-16, 3.2 km (2.0 mi) max
Input Power Voltage . . . . . 115 V AC ± 10%, 47 to 440 Hz
Power Consumption . . . . . 162 W
Power Supplied to Subscriber Instrument . . . . . 55 V DC
Size . . . . . 21.6 cm high by 30.5 cm deep by 43.8 cm wide (8.5 in by 12 in by 17.25 in)
Weight . . . . . 17 kg (37.4 lb)

TD-1235( )/TTC
Loop Group Multiplexer

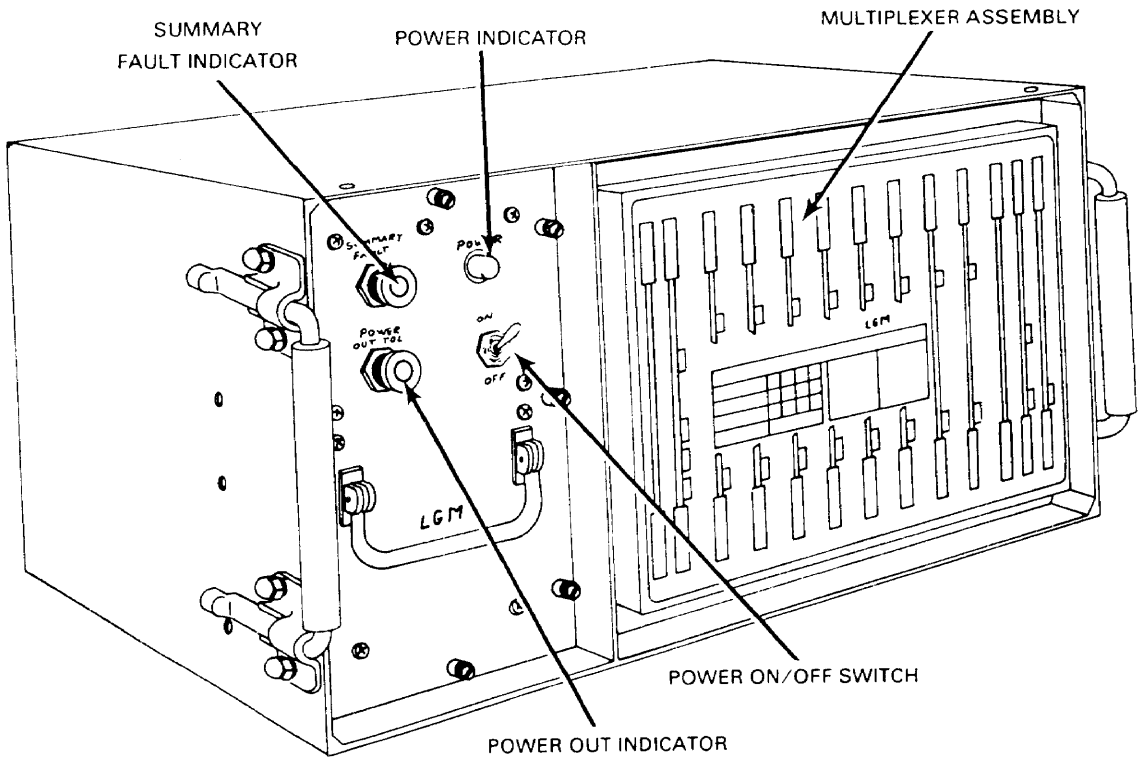

TD-1236()/G
Trunk Group Multiplexer

NSN: 5820-01-145-2461

Reference: TM 11-5805-697-12

General Information

The TD-1236( )/G is a member of the DGM family. It combines 2, 3, or 4 full duplex group inputs of various rates into a super group. The TGM combines into and from balanced NRZ groups (up to 4 groups). It uses three separate rate structures so that I/O rates must be in the same rate family. The TGM also can provide single group operation when the group input is 576 kb/s or lower. The TGM is used in conjunction with the LGM, RLGM/CD, MGM GM, CDM, and TED.

Technical Characteristics

Number of Groups . . . . . Max 4
Input Power Voltage . . . . . 115 V AC ± 10%, 47 to 63 Hz
Power Consumption . . . . . 90 W
Size . . . . . 21.6 cm high by 30.5 cm deep by 43.8 cm wide (8.5 in by 12 in by 17.25 in)
Weight . . . . . 16 kg (35.2 lb)

TD-1236( )/G
Trunk Group Multiplexer

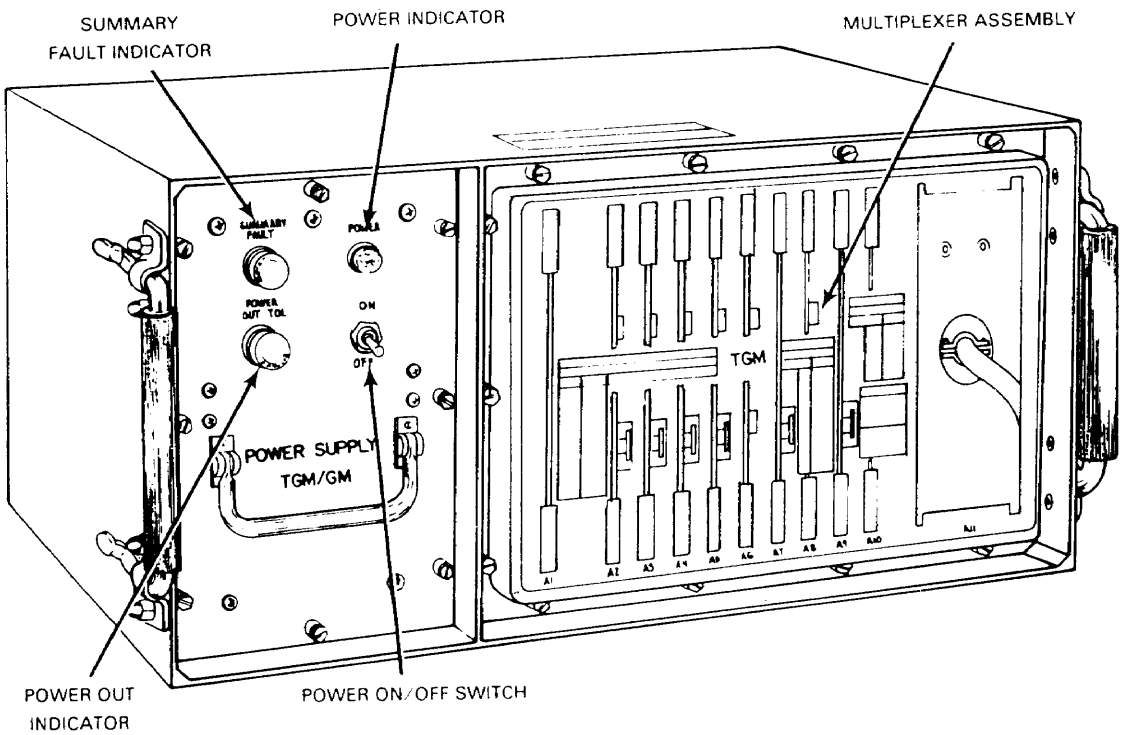

TD-1237()/G
Master Group Multiplexer

NSN: 5820-01-145-2459

Reference: TM 11-508-5805-698-12

General Information

The TD-1237( )/G is a member of the DGM family. It provides low power digital transmission capability for the up-the-hill link by a synchronous combining of 12 group or super group inputs into a master group output. The TD-1237( )/G time division multiplexes up to 12 digital input group signals ranging from 72 to 4915.2 kb/s into a master group of either 9.36 or 18.72 rob/s. It can accept, on its input side, any TRI-TAC group or super group signal and group outputs from TD-660 and TD-976. On the master side it interfaces with HSCDM and the SRWBR. It also synchronously multiplexes two 16 or 32 kb/s channels carrying either DVOW or telemetry. It is used in conjunction with the LGM, RLGM/CD, TGM, GM, HSCDM, LSCDM, TED, SRWBR, and CNCE.

Technical Characteristics

Number of Groups . . . . . Up to 12
Input Power Voltage . . . . . 115 V AC ± 10%, 47 to 440 Hz
Power Consumption . . . . . 187 W
Size . . . . . 35.6 cm high by 30.5 cm deep by 43.8 cm wide (14 in by 12 in by 17.25 in)
Weight . . . . . 28.3 kg (62.3 lb)

TD-1237( )/G
Master Group Multiplexer

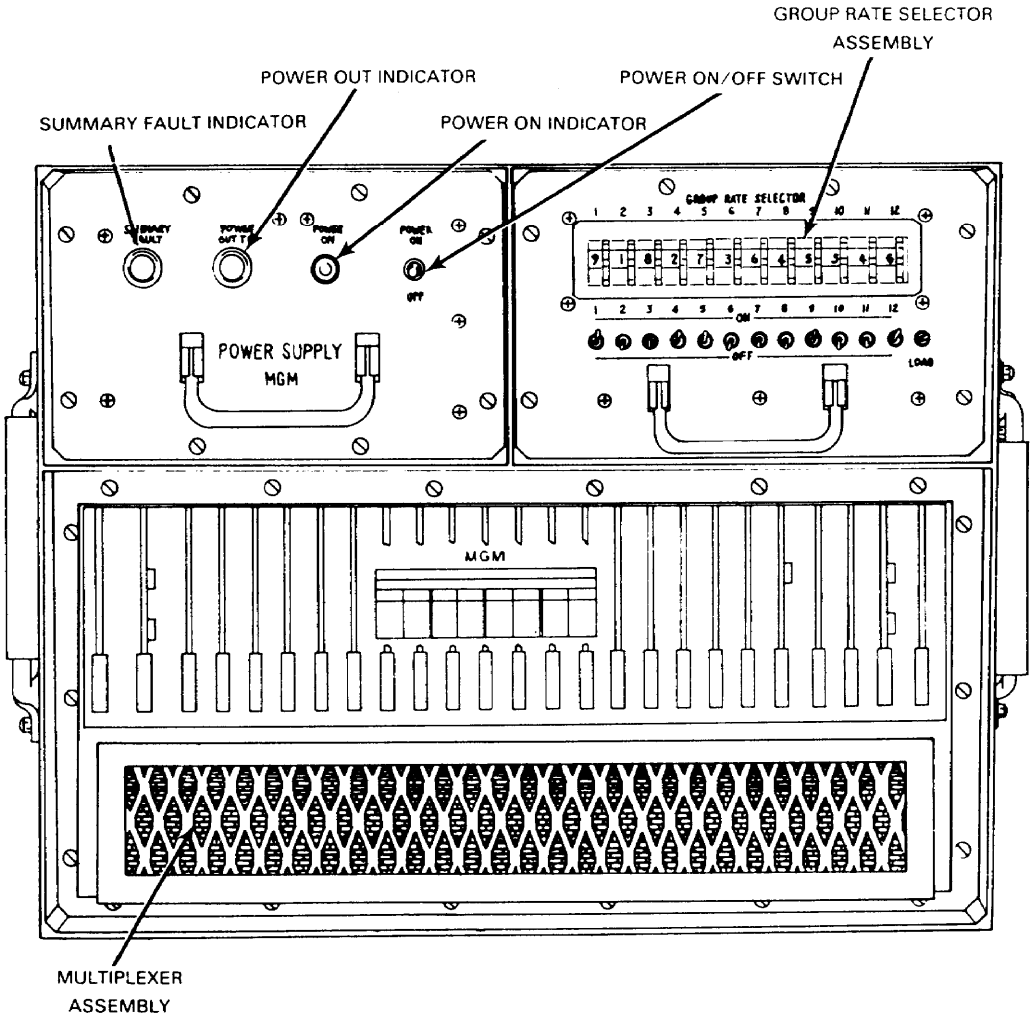

TD-1337(V)/G
Multiplexer/Demultiplexer

NSN: 7025-01-112-6311 (TD-1337(V)1/G)
7025-01-112-6310 (TD-1337(V)2/G)
7025-01-112-6312 (TD-1337(V)3/G)
7025-01-127-7020 (TD-1337(V)4/G)

Reference: TM 11-7025-221-10

General Information

The TD-1337(V)/G is a synchronous TDM set compatible with ATACS and TRI-TAC operations. Synchronous data input from eight to 1,152 kb/s of mixed rates are combined and transmitted at a composite rate output ranging from 16 to 4,664 kb/s. Timing is internal or may be provided externally. TD-1337(V)/G provides three orderwires consisting of 16 kb/s secure, nonsecure, and 2.4 kb/s orderwire interfacing with an advance narrow band digital voice terminal (ANDVT). The four configurations of the TD-1337(V)/G used for nodal or non-nodal application are determined through printed circuit board replacement. The TD-1337(V)/G can perform the TD-754 multiplexer (MUX) and demultiplexer (DEMUX) functions when interfacing the TD-660s.

Technical Characteristics

Synchronous Data Input . . . . . Select up to 8 of a possible 13 group inputs
Select 16/32 kb/s dedicated user
Select 16 kb/s DVOW

User Interface Ports of Entry 8
Unbalanced NRZ Ports of Entry. 4
Conditioned Diphase:
Group Modem Port of Entry 1
Loop Modem Port of Entry 1
Speed Interface (MUX I/O) Ports of Entry:
MUX 1
DEMUR 4
Power Requirement . . . . . 115 V AC, 47 to 63 Hz
Power Consumption . . . . . 140 W

TD-1337(V)/G
Multiplexer/Demultiplexer

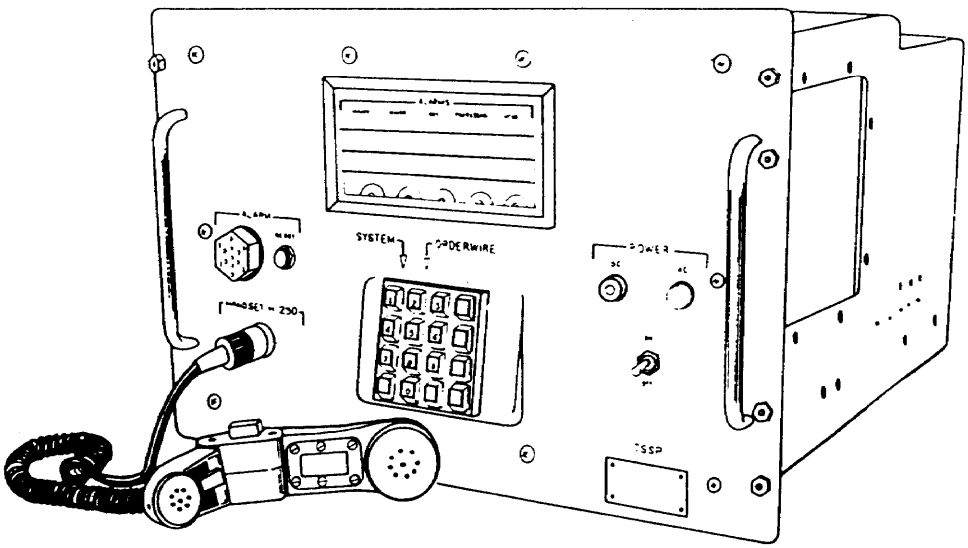

FUNCTIONAL DIFFERENCES BETWEEN MODELS

CAPABILITY	(V)1	(V)2	(V)3	(V)4
Group Interfaces				
Maximum number of active ports (group inputs/outputs)	8	2	8	4
Number of unbalanced NRZ interfaces	4	2	0	0
Number of balanced NRZ interfaces	8	2	8	4
Number of conditioned diphase (group modem) interfaces	1	1	1	1
Super Group Interfaces				
Number of super groups transmitted	1	1	1	1
Number of super groups received	4	1	4	1
Orderwires				
16 kb/s nonsecure digital voice (H-250 handset)	yes	yes	yes	yes
16 kb/s secure digital voice (VINSON)	yes	yes	yes	yes
24 kb/s digital voice (ANDVT)	no	no	yes	yes
Miscellaneous				
16/32 kb/s dedicated user conditioned diphase interface (loop modem)	yes	yes	yes	yes
CESE telemetry reporting function	no	no	yes	yes
TD-754 DEMUX function	yes	yes	no	no
TD-754 MUX function	yes	no	no	no
TD-976 mode capability	yes	no	no	no

Section II. Auxiliary Multiplex Equipment

AN/PTM-7 Telephone Test Set with CX-11230/G or CX-4245/G Special Purpose Electrical Cable and TD-206B/G Pulse Form Restorer

NSN: 6625-00-902-75'74 (AN/PTM-7)
5995-00-133-9126A (CX-11230/G or CX-4245/G)
5805-01-020-2251 (TD-206B/G)

Reference: TM 11-6625-648-12 (AN/PTM-7)
TM 11-5995-208-10 (CX-11230/G or CX-4245/G)
TM 11-5805-367-12 (TD-206B/G)

General Information

The AN/PTM-7 locates faults in a PCM cable link that consists of Pulse Form Restorer TD-206B/G and Special Purpose Electrical Cable CX-11230/G or CX-4245/G. The AN/PTM-7 determines the location of an open or short circuit in a cable link up to 1.6 km (1 mi) away in one of the two circuit paths. Communication is possible with attended points by connecting AN/PTM-7 to the restorer or at a cable rupture. The cable is used to transmit video signals via two internal coaxial cables between attended points in full-duplex mode. Each cable is .4 km (.25 mi) long and interfaces another cable, or TD-206B/G or attended point. The TD-206B/G is an unattended restorer which receives distorted input signals and restores them to the originally generated form.

Technical Characteristics

AN/PTM-7:
- Orderwire . . . . . 300 to 1700 Hz
- Signaling Frequency . . . . . 1600 Hz
- Power Requirement . . . . . 7.5 and 14.5 V DC
- Weight . . . . . .10.4 kg (23 lb)

CX-11230/G or CX-4245/G:
- Channel Capacity . . . . . 6, 12, 24, or 48
- Weight with Reel . . . . . 52.2 kg (115 lb)
- Maximum Span without Support . . . . . 30.5 m (100 ft)

WARNING: DO NOT PUT UNSUPPORTED CONNECTORS IN SPAN.

Technical Characteristics (Cont.)

TD-206 B/G:
Power Requirement ..... 11.3 V DC supplied by TD-204/U or TD-754/G via CX-11230 or CX-4245/G cable
Weight ..... 93 g (2.04 lb)

AN/PTM-7 Telephone Test Set with CX-11230/G or CX-4245/G Special Purpose Electrical Cable and TD-206B/G Pulse Form Restorer

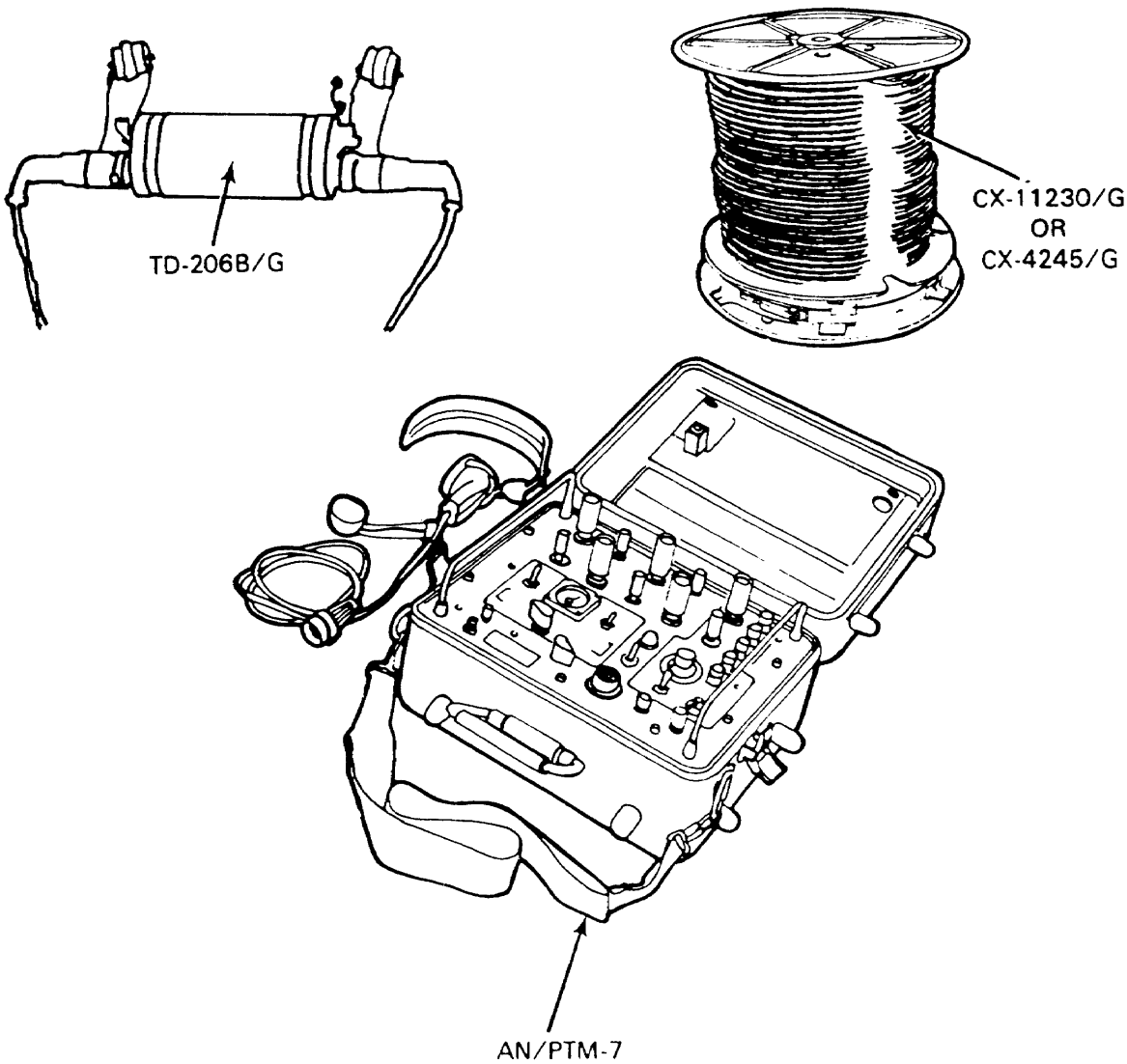

CV-1548/G and CV-1548A/G Telephone Signal Converters

NSN: 5805-00-069-8795

Reference: TM 11-5805-367-12

General Information

The CV-1548/G and the CV-1548A/G convert two-wire telephone circuits to four-wire circuits for transmission over multiplex systems. A straight-through patch is provided in the four-wire mode. These converters provide three signaling options. They convert a 20-Hz ringing signal to 1600 Hz, and 1600 Hz to 20 Hz for two-way ringing. The CV-1548/G and the CV-1548A/G convert a DC closure to 1600 Hz and 1600 Hz to a DC closure for originate and terminate plug supervision on one-way ringdown trunks. They provide the option of no-ringing signal conversion. These telephone signal converters are used with Multiplexer TD-352/U, TD-353/U, and TD-660/U. The CV-1548A/G does not contain the test align meter, the meter selector switch, or 1600-Hz reference level adjust on power supply.

Technical Characteristics

Number of Channels 12
(each channel operates independently)
Loop Impedance . . . . . 600 ohms
Line Impedance . . . . . 600 ohms
Power Requirement . . . . . 109 to 121 V AC, 47 to 63 Hz
Power Consumption . . . . . 60 W
Weight . . . . . 24.5 kg (54 lb)

CV-1548/G and CV-1548A/G Telephone Signal Converters

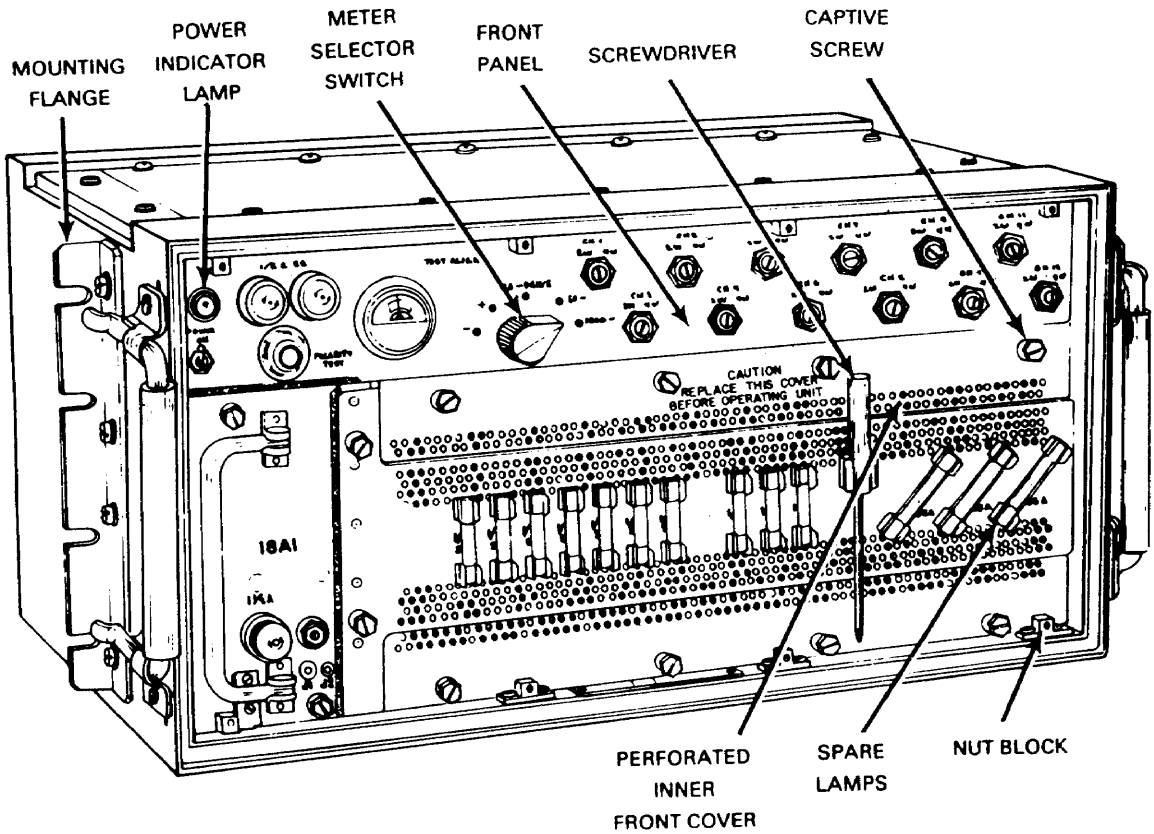

TS-3647( )/G Telephone Test Set Cable Orderwire Unit with TD-1218( )/G Pulse Form Restorer (Low Speed) and TD-1219( )/G Pulse Form Restorer (High Speed)

NSN: 6625-01-145-2463 (TS-3647( )/G)
5820-01-145-4938 (TD-1218( )/G)
5820-01-145-4939 (TD-1219( )/G)

Reference: TM 11-5805-703-14 (TS-3647( )/G)
TM 11-5805-701-12 (TD-1218( )/G)
TM 11-5805-702-12 (TD-1219( )/G)

General Information

The TS-3647( )/G is a member of the DGM family. It provides field maintenance of the high speed and low speed cable systems and is field portable. The COU allows access to the cable system maintenance orderwires, monitors low and high speed conditioned diphase signals, and performs measurement of the power feed current. It is used in conjunction with the CDM, RLGM, RMC, RLGM/CD, GM, LSPR, and HSPR.

The TD-1218( )/G is a member of the DGM family. It is used with the LSCDM to regenerate the cable signal at 1.6 km (1 mi) intervals. The LSPR is a two-way unit which detects and regenerates conditioned diphase signals at 2,304 kb/s. It carries orderwire circuits and will provide loading and access to the orderwire signals. It is used in conjunction with the LSCDM and COU.

The TD-1219( )/G is a member of the DGM family. It is used in repeater cable systems in conjunction with the HSCDM to regenerate the cable signal each .4 km (.25 mi) in the system. The HSPR is a two-way unit which detects and regenerates conditioned diphase signals at 19,200 kb/s. It carries orderwire circuits and operates in conjunction with the HSCDM and COU.

Technical Characteristics

Capability (TS-3647/G) . . . . . Field measurement of cable link parameters and internal battery condition. Cable links consist of up to 64.3 km (40 mi) of Special Purpose Electrical Cable CX-11230/G or CX-4245/G and TD-1218/Gs, TD-1219/Gs, MD-1023/Gs, and MD-1024/Gs in various quantities. Access to cable link analog orderwire; half duplex voice and signaling.

Signal (TD-1218/G and TD-1219/G) . . . . . Group traffic riding on analog orderwire and pulse form restorer power feed

Interfacing Cable:
(TD-1218/G and TD-1219/G) . . . . . Special Purpose Electrical Cable CX-11230/G or CX-4245/G

Cable Voltage (TS-3647/G) . . . . . 0 to 1,000 V DC range

Cable Current:
TD-1218/G (LSPR) . . . . . 40 mA
TD-1219/G (HSPR) . . . . . 90 mA

Input Signal:
TD-1218/G . . . . . 30 mV, peak-to-peak
TD-1219/G . . . . . 30 mV, peak-to-peak

Output Signal:
TD-1218/G . . . . . 2 V, peak-to-peak
TD-1219/G . . . . . 1.5 V, peak-to-peak

Analog Orderwire:
TD-1218/G and TD-1219/G . . . . . Passive transmission of voice for maintenance, independent of group traffic

Prime Power (TS-3647/G):
Type . . . . . Two batteries (BA-5599/U), 9 V
Voltage . . . . . 18 V DC

Power Requirements:
TD-1218/G . . . . . 40 mA constant curent supplies over the cable link from MD-1023/Gs
TD-1219/G . . . . . 90 mA constant current supplied over the cable link from MD-1024/Gs

Weight:
TS-3647/G . . . . . 11.3 kg (24.2 lb)
TD-1218/G and TD-1219/G . . . . . 3.04 kg (6.7 lb)

TS-3647( )/G Telephone Test Set Cable Orderwire Unit with TD-1218( )/G Pulse Form Restorer (Low Speed) and TD-1219( )/G Pulse Form Restorer (High Speed)

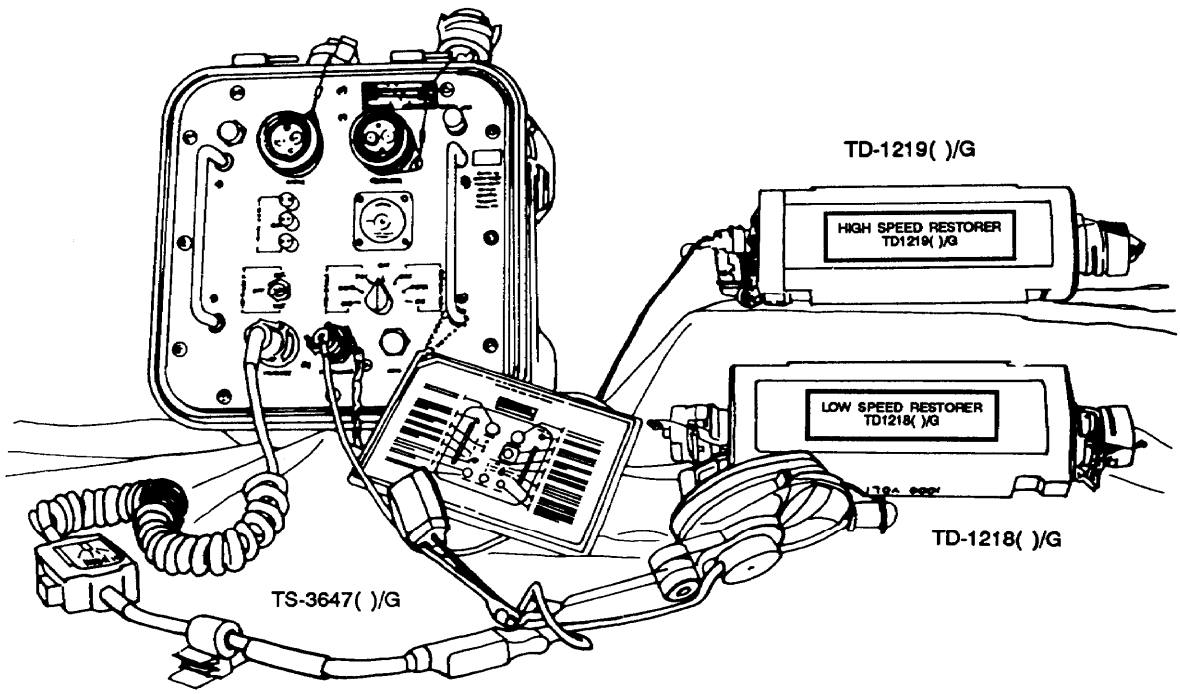

Chapter 4 Single-Channel Radios

	Page
Section I. Frequency Modulated Radio Sets	4-2
AN/PRC-25 Radio Set	4-2
AN/PRC-77 Radio Set	4-4
AN/VRC-12 Series Radio Sets	4-6
AN/VRC-53, AN/VRC-64, AN/GRC-125, and AN/GRC-160 Radio Sets	4-10
AN/PRC-119(V)1, AN/VRC-87(V)2, AN/VRC-88(V)3, AN/VRC-89(V)4, AN/VRC-90(V)5, AN/VRC-91(V)6, AN/VRC-92(V)7 SINCGARS Radio Sets	4-12
Section II. Amplitude Modulated Radio Sets	4-14
AN/GRC-106 and AN/GRC-106A Radio Sets	4-14
AN/GRC-109 Radio Set	4-16
AN/GRC-193 High Frequency Radio Set	4-18
AN/GRC-213 High Frequency Radio Set	4-20
AN/PRC-41 and AN/PRC-41A Radio Sets	4-22
AN/PRC-47 Radio Set	4-24
AN/PRC-74 Radio Set	4-26
AN/PRC-104A High Frequency Radio Set	4-28
AN/PRC-112 Multi-Transmission Transceiver	4-30
AN/PRC-112A(C) Multi-Transmission Radio with Embedded Communications Security	4-32
AN/TRC-133A Radio Terminal Set	4-34
AN/TRQ-35(V) Tactical Frequency Sounding System	4-36
AN/VRC-24A and AN/TRC-68A Radio Sets	4-38
Section III. Auxiliary Radio Equipment	4-40
AB-903/G Mast	4-40
AN/GRA-6 Receiver-Transmitter Control Group	4-42
AN/GRA-39, AN/GRA-39A, and AN/GRA-39B Radio Set Control Groups	4-44
AN/GRA-50 Antenna Group	4-46
AN/GRA-71 Coder-Burst Transmission Group	4-47
AN/GSA-7 Radio Set Control	4-48
AT-784/PRC Loop Antenna	4-50
AT-984A/G Long-Wire Antenna	4-52
C-6709/G Control, Radio Set	4-53
KY-90 Secure Digital Net Radio Interface Unit	4-54
OE-254( )/GRC Antenna Group	4-55
OE-303 Half-Rhombic Very High Frequency Antenna	4-57
RC-292 Antenna Equipment	4-59

Section I. Frequency Modulated Radio Sets

AN/PRC-25
Radio Set

NSN: 5820-00-857-0759

Reference: TM 11-5820-398-12

General Information

The AN/PRC-25 is a short-range, manpack, portable frequency modulated (FM) transceiver that provides two-way voice communication. The RT-505 and RT-505A transceiver radios are similar components. Both case modules are identical; however, the internal module circuits of the RT-505A are micro-modularized. The modules of the two radios are physically and electrically interchangeable. The RT-505 and the RT-505A are part of the AN/PRC-25. They can be used as part of vehicular Radio Sets AN/VRC-53 and AN/GRC-125.

Technical Characteristics

Frequency Range	Low band, 30.00 to 52.95 MHz; High band, 53.00 to 75.95 MHz
Power Output	1.1 to 2.0 W
Power Source	Batteries, dry BA-4386/U and BA-398/U
Distance Range	5 to 8 km (3 to 5 mi)
Antenna	AT-892 semirigid tape, AT-271A multisection whip, RC-292 ground plane, OE-254
Type of Service	30 K0F3E
Weight	10.7 kg (23.5 1b) with battery
Limitation	Nonsecure operation

AN/PRC-25
Radio Set

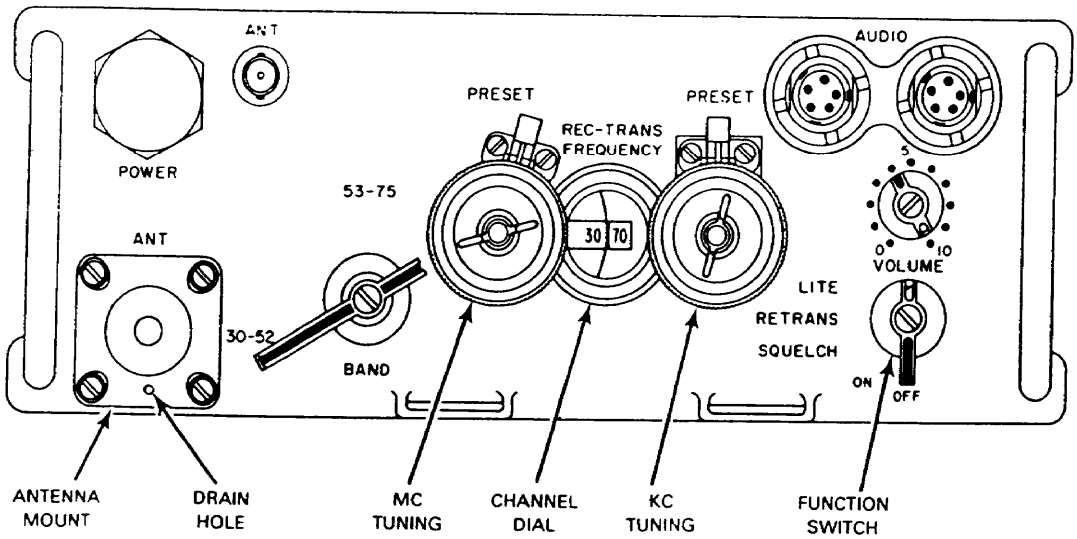

AN/PRC-77
Radio Set

NSN: 5820-00-930-3724

Reference: TM 11-5820-667-12

General Information

The AN/PRC-77 is a manpack, portable FM transceiver used to provide short-range, two-way radiotelephone voice communication. It can provide secure voice (X-mode) transmission with the TSEC/KY-57. The radio consists of RT-841/PRC-77 transceiver and minor comonents. The RT-841 also is used as part of Radio Sets AN/VRC-64 and AN/GRC-160.

Technical Characteristics

Frequency Range	Low band, 30.00 to 52.95 MHz; High band, 53.00 to 75.95 MHz
Planning Range	8 km (5 mi)
Power Output	0 to 4.0 W
Power Source	BA-4386/U, BA-398/U or BA55984
Antenna	AT-892/PRL-24, at 271A/PRC multisection whip or doublet
Type of Service	30K0F3E
Weight	10.7 kg (23.5 lb)

AN/PRC-77
Radio Set

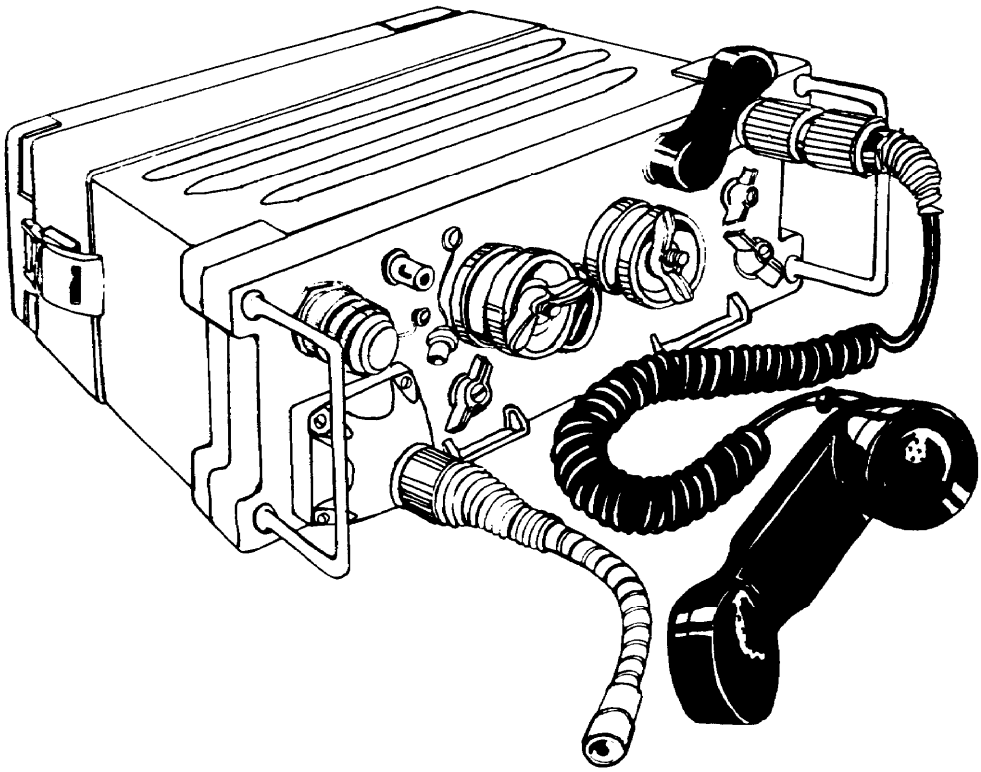

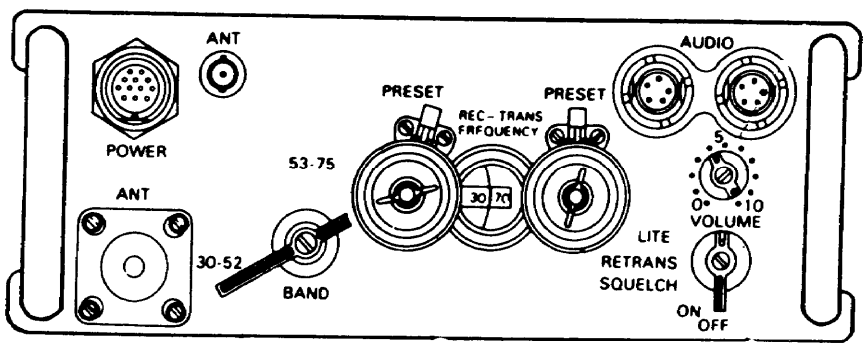

AN/VRC-12 Series Radio Sets

NSN: 5820-00-223-7412

Reference: TM 11-5820-401-10-1
TM 11-5820-401-10-2

General Information

The radio sets in the AN/VRC-12 series are short-range, vehicular, aircraft, and fixed-station mounted units. They provide FM radiotelephone communication and can be used with speech security or digital data equipment TSEC/KY-8, or TSEC/KY-57 by connection through the X-mode facility of the radio sets. Transceivers RT-246 and RT-524 and Receiver R-442 make up the major components of the AN/VRC-12 series radio configuration. The RT-246 has 10 automatic presets and remote select/power capability. The RT-524 is equipped with a built-in loudspeaker.

Technical Characteristics

Frequency Range . . . . . 30.00 to 52.95 (A-Band); 53.00 to 75.95 (B-Band)
Planning Range . . . . . .8 to 41 km (5 to 25.5 mi)
Power Input . . . . . Low power: 0.5 to 8 W, 25 V DC operating power; 0.5 to 10 W, 30 V DC operating power; High power: 35 W minimum, 25 V DC operating power
Power Output . . . . . Low, 8W; high, 35 W
Power Source . . . . . Vehicular power or Power Supply PP-2953 and Power Supply PP-665
NRI Operation . . . . . Using AN/GSA-7, AN/GRA-39, or C-6709/G Antenna -- AT-912 or AS-1729, 3.05 m (10 ft) vehicular whip; OE-254/GRC or fixed RC-292 for installation; and AB-15 or AB-558, 3.35 m (11 ft) whip is used with R-442/VRC
Tuning . . . . . Detent
Squelch . . . . . 150 Hz tone and noise
Type of Service 30K0F3E
Weight . . . . . 25.5 kg (56 lb), RT-246; 23 kg (51 lb), RT-524; 8.2 kg (18 lb), R-442

AN/VRC-12 Series Radio Sets

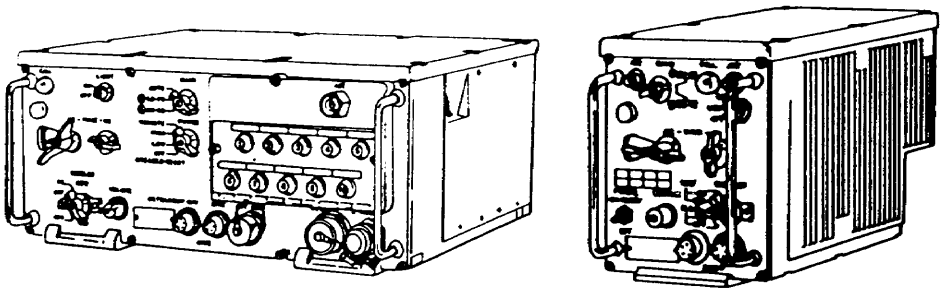

AN/VRC-12

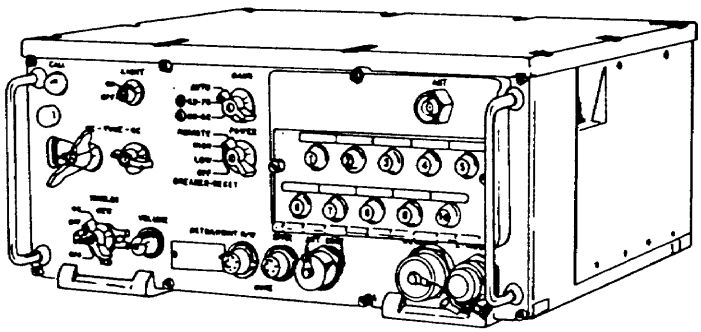

AN/VRC-43

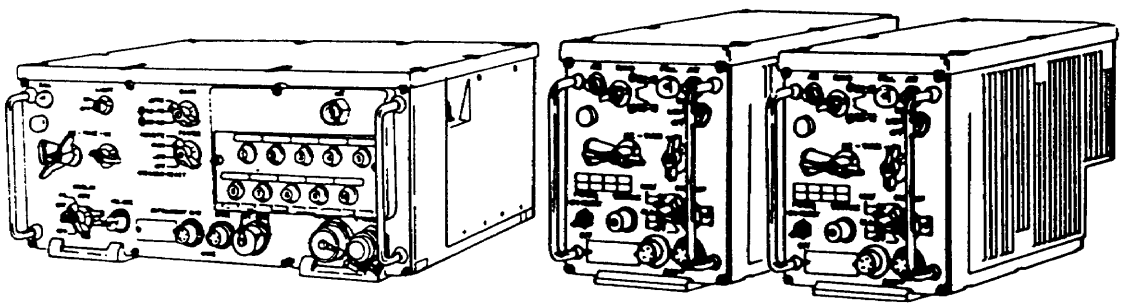

AN/VRC-44

AN/VRC-12 Series Radio Sets (Cont.)

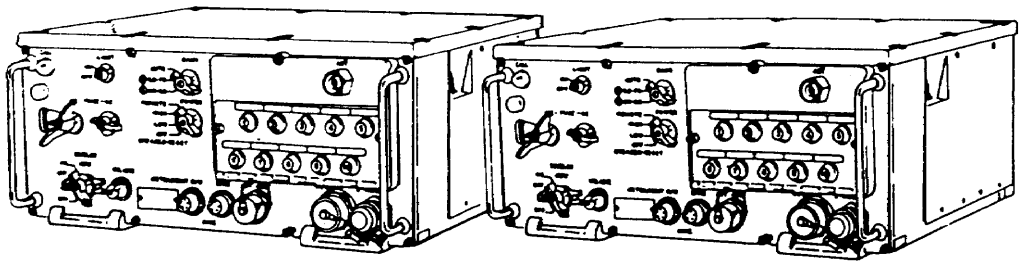

AN/VRC-45

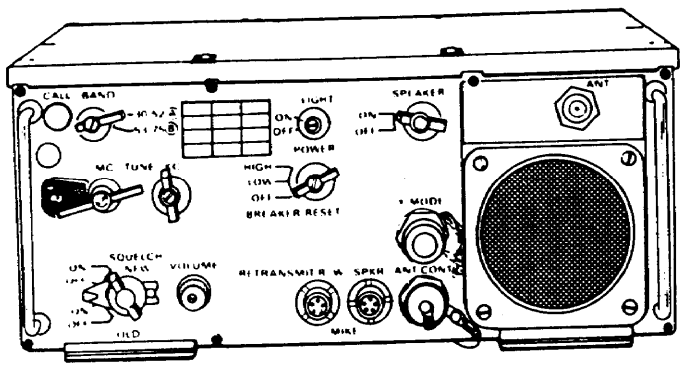

AN/VRC-46

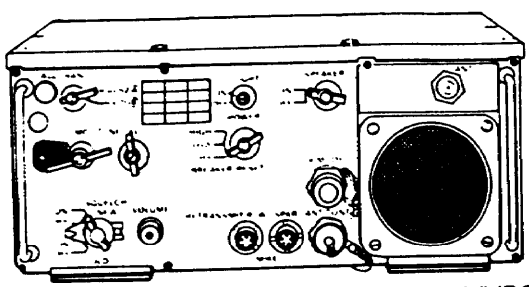

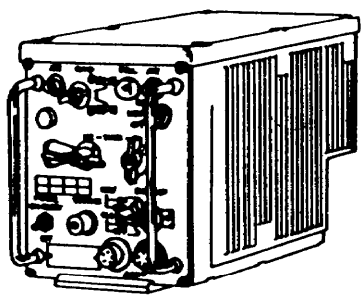

AN/VRC-47

AN/VRC-12 Series Radio Sets (Cont.)

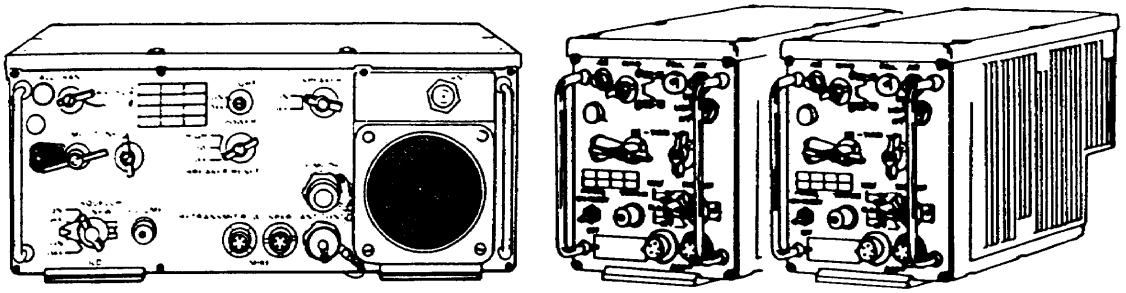

AN/VRC-48

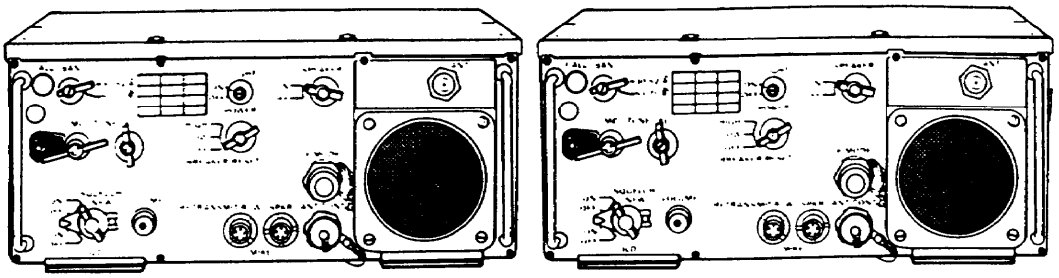

AN/VRC-49

EQUIPMENT CONFIGURATIONS						
NOMEN	RT-246	R-442	RT-524	C-2299	AT-912 OR AS-1729	AB-15 OR AB-558 WITH ANTENNA ELEMENTS
AN/VRC-12	1	1	0	0	1	1
AN/VRC-43	1	0	0	0	1	1
AN/VRC-44	1	2	0	0	1	2
AN/VRC-45*	2	0	0	1	2	0
AN/VRC-46	0	0	1	0	1	0
AN/VRC-47	0	1	1	0	1	1
AN/VRC-48	0	2	1	0	1	2
AN/VRC-49*	0	0	2	1	2	0

*When Radio Sets AN/VRC-45 and AN/VRC-49 are equipped with VINSON installation kits, the C-2299 is replaced by the C-10374/VRC.

AN/VRC-53, AN/VRC-64, AN/GRC-125, and AN/GRC-160 Radio Sets

NSN: 5820-00-223-7467 (AN/VRC-53)
5820-00-223-7475 (AN/VRC-64)
5820-00-223-7411 (AN/GRC-125)
5820-00-223-7473 (AN/GRC-160)

Reference TM 11-5820-498-12

General Information

The AN/VRC-53 and the AN/VRC-64 are vehicular mounted. The AN/GRC-125 and the AN/GRC-160 can be used for vehicular and manpack operations. Both variations of the radio sets provide short range, two way, FM radiotelephone communication between vehicles and crew served weapons (tanks, armored personnel carriers). The radio sets are compatible with other FM radio sets in 30.00 to 75.95 MHz range.

Technical Characteristics

Frequency Range. . . . . Low band, 30,00 to 52.95 MHz; High band, 53.00 to 75.95 MHz
Power Output. . . . . 1 to 3 W
Power Source. . . . . Batteries, dry BA-4386/U and BA-5598/U
Distance Range. . . . . 5 to 8 km (3 to 5 mi)
Antenna.. .. . . . . Vehicular-mounted AS-1729/VRC, manpacked AT-892 semirigid tape, AT-271A multisection whip
Vehicular Operation . . . . . 24 V DC
Type of Service 30 K0F3E
Weight . . . . . 15.5 kg (33.5 lb)

AN/VRC-53 and AN/VRC-64 Radio Sets

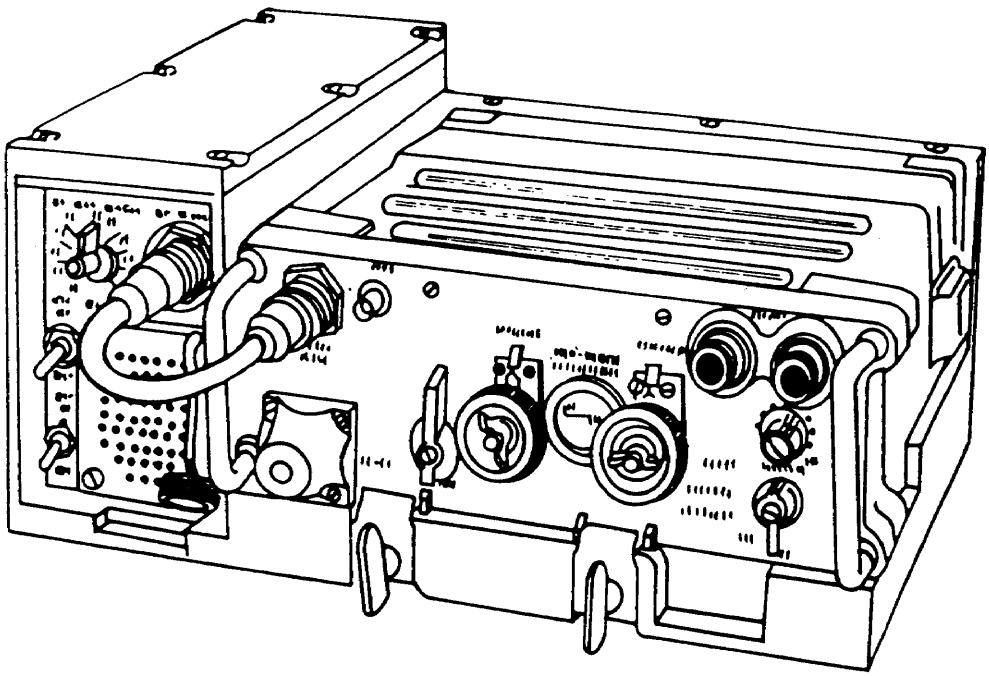

AN/PRC-119(V)1, AN/VRC-87(V)2, AN/VRC-88(V)3, AN/VRC-89(V)4, AN/VRC-90(V)5, AN/VRC-91(V)6, and AN/VRC-92(V)7 SINCGARS Radio Sets

NSN: 5820-01-151-9915 (AN/PRC-119( )(V)1)
5820-01-151-9916 (AN/VRC-87( )(V)2)
5820-01-151-9917 (AN/VRC-88( )(V)3)
5820-01-151-9918 (AN/VRC-89( )(’V)4)
5820-01-151-9919 (AN/VRC-90( )(V)5)
5820-01-151-9920 (AN/VRC-91( )(V)6)
5820-01-151-9921 (AN/VRC-92( )(V)7)

Reference: TM 11-5820-890-10-1
TM 11-5820-890-20-2

General Information

Single-Channel Ground and Airborne Radio Systems (SINCGARS) is a family of VHF-FM radio sets designed to meet the Army’s tactical communications requirements under the new Army operations doctrine. SINCGARS is replacing the AN/PRC-77 and the AN/VRC-12 series radio sets. It is designed for simple, quick operation using a 16-element keypad for push-button tuning. SINCGARS is capable of short-range or long-range operation for voice, frequency shift-keying (FSK), or digital data communications. It can be used for single-channel operation or in a jam-resistant, frequency hopping mode which can be changed as needed. SINCGARS has a built-in self test with visual and audio read back. Major components and equipment configurations are shown in the chart on the following page.

Technical Characteristics

Frequency Range . . . . . 30 to 88 MHz
Number of Channels . . . . . 2,320 (spaced every 25 kHz) includes eight channels that can be preset for single-channel operation or eight that can be preset for frequency hopping operation
Power Input . . . . . 12 V DC, manpack; 28 V DC, vehicular/aircraft
Power Output . . . . . 5 W, and up to 50 W with power amplifier
Antenna . . . . . See the following chart

SINCGARS Radio Sets

SINCGARS COMPONENTS			Components						
			Receiver/Transmitter	Vehicle Application	Vehicle Antenna	Manpack Antenna	Battery Case	Power Amplifier	
Version	Nomenclature	Function							Replaces
(V1)	AN/PRC-119	Manpack	1			1	1		AN/PRC-25, AN/PRC-77
(V2)	AN/VRC-87	Vehicle, Short Range	1	1	1				AN/VRC-53, AN/VRC-64
(V3)	AN/VRC-88	Vehicle, Short Range/ Dismount	1	1	1	1	1		AN/GRC-125, AN/GRC-160
(V4)	AN/VRC-89	Vehicle, Long Range/ Vehicle, Short Range	2	1	2			1	AN/VRC-12, AN/VRC-47
(V5)	AN/VRC-90	Vehicle, Longe Range	1	1	1			1	AN/VRC-43, AN/VRC-46
(V6)	AN/VRC-91	Vehicle, Long Range/ Vehicle, Short Range/ Dismount	2	1	2	1	1	1	AN/VRC-46 and AN/GRC-160
(V7)	AN/VRC-92	Dual/Vehicle, Long Range	2	1	2			2	AN/VRC-45, AN/VRC-49

Ancillary Items:

Receiver-Transmitter RT-1439(P)/VRC
Data Adapter MX-10506( )/VRC
Electronic Counter-Countermeasure Module C-11290( )/VRC
Intervehicular Remote Control Unit C-11291( )/VRC

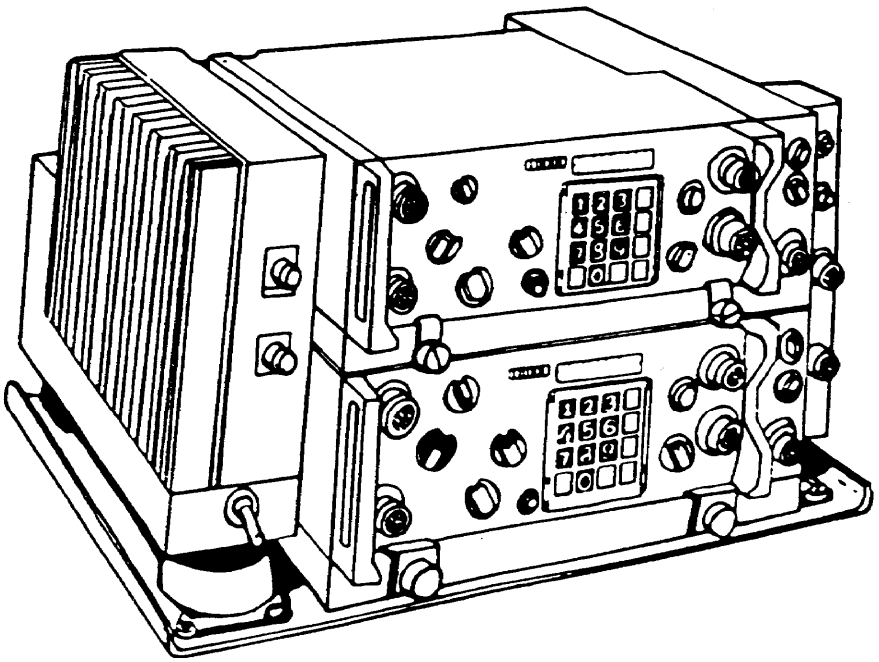

Section II. Amplitude Modulated Radio Sets

AN/GRC-106 and AN/GRC-106A Radio Sets

NSN: 5820-00-402-2263 (AN/GRC-106)
5820-00-223-7548 (AN/GRC-106A)

Reference: TM 11-5820-520-10

General Information

The AN/GRC-106 is an HF-single sideband (SSB) radio set used primarily as a mobile link in a communications network. It also may be used in fixed and semifixed applications, and it has an AM mode to make it compatible with standard AM radio sets. The AN/GRC-106 is now being used as the basic radio set with all of the newer SSB radio teletypewriter (RATT) configurations The AN/GRC-106 and AN/GRC-106A are identical except that the AN/GRC-106 uses an RT-662/GRC, and the AN/GRC-106A uses an RT-834/GRC. The KY-99 is compatible with the AN/GRC-106 for secure operation.

Technical Characteristics

Frequency Range . . . . . 2.0 to 29.999 MHz (AN/GRC-106); 2.0 to 29.9999 (AN/GRC-106A)
Planning Range . . . . . Ground wave, 80 km (50 mi) (frequency depends on antenna and terrain); sky wave, 160 to 2,400 km (100 to 1,491 mi)
Number of Channels . . . . . RT-662: 28,000, spaced every 1 kHz; RT-834: 280,000, spaced every 100 Hz
Power Input . . . . . 27 V DC
Power Source . . . . . Vehicle power system; to operate from 115 V AC, Power Supply PP-4763A must be used to provide the required 27 V DC
Power Output . . . . . 3K00R3E, 3K00J3E: 400 W PEP 1K10A1A, 100HA1A: 200 W
Antenna . . . . . 4.57 m (I5 ft) whip or doublet AN/GRA-50 Tuning, Digital receiver also has a ± 600 Hz vernier
Squelch . . . . . Noise
Security Device TSEC/KY-65
Type of Service 3K00J3E, 3K00R3E, 1K0013A1A, 1K10A1A
Weight . . . . . 58.1 kg (128 lb)

AN/GRC-106 and AN/GRC-106A Radio Sets

RT-662/GRC

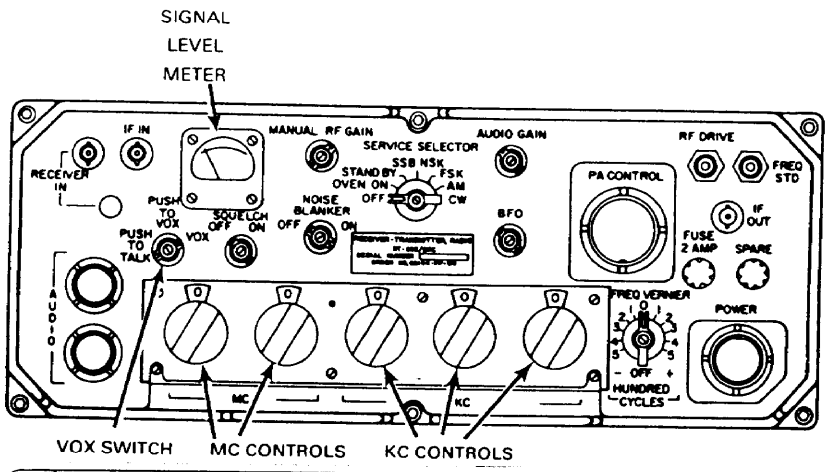

RT-834/GRC

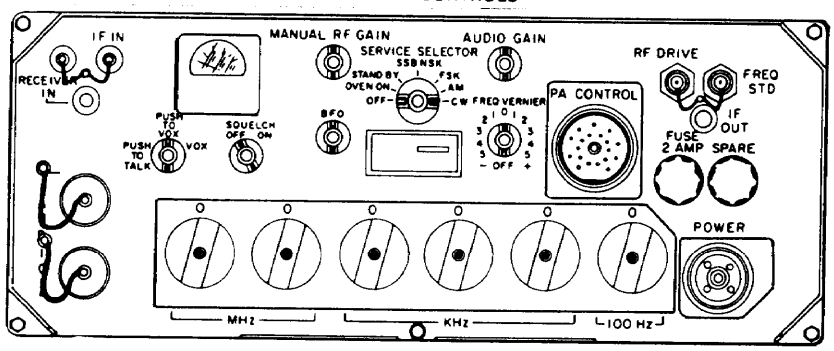

AM-3349/GRC-106

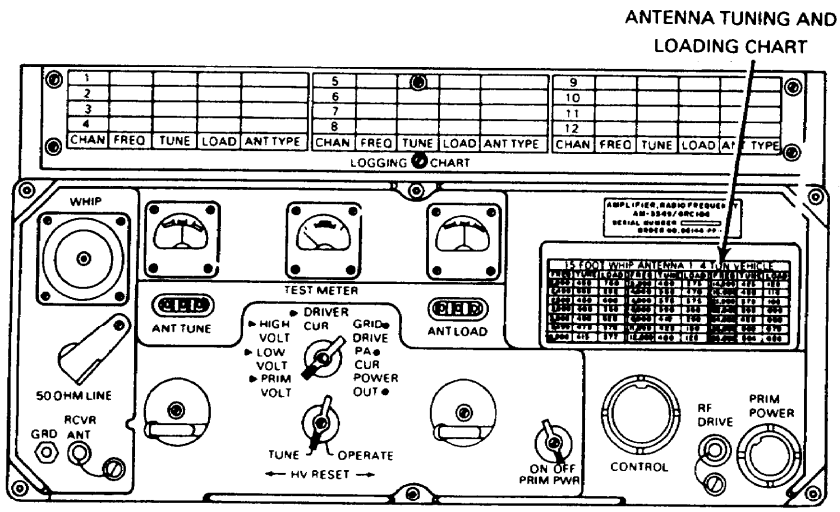

AN/GRC-109
Radio Set

NSN: 5820-00-892-0881

Reference: TM 11-5820-474-14

General Information

The AN/GRC-109 is a compact, portable high frequency (HF) radio set used for continuous wave (CW) communications under a wide range of climatic conditions. Transmissions can be made using the built-in hand key, an external hand key, or an external, high-speed automatic keyer such as Coder-Burst Transmission Group AN/GRA-71. Two power supplies and a voltage regulator permit operation from a variety of power sources. Current tactical speech security equipment is not compatible with the AN/GRC-109; therefore, secure voice is not a mode of operation.

Technical Characteristics

Frequency Range . . . . . Transmit, 3 to 22 MHz; receive, 3 to 24 MHz
Planning Range . . . . . 121 km (75mi)
Number of Channels . . . . . 24, crystal controlled
Power Input . . . . . 75 to 260 V AC, 40 to 400 Hz or 6 V DC
Power Source . . . . . Any appropriate AC power source, generator DC G-43/G, 6 V DC wet or dry battery
Power Output . . . . . 10 to 15 W
Antenna . . . . . Inverted-L, length depending on the frequency
Tuning . . . . . Transmitter, crystal controlled; receiver, crystal controlled or continuous
Squelch . . . . . None
Type of Service . . . . . Transmit, 100HA1A
Weight . . . . . 25.2 kg (55.5 lb)

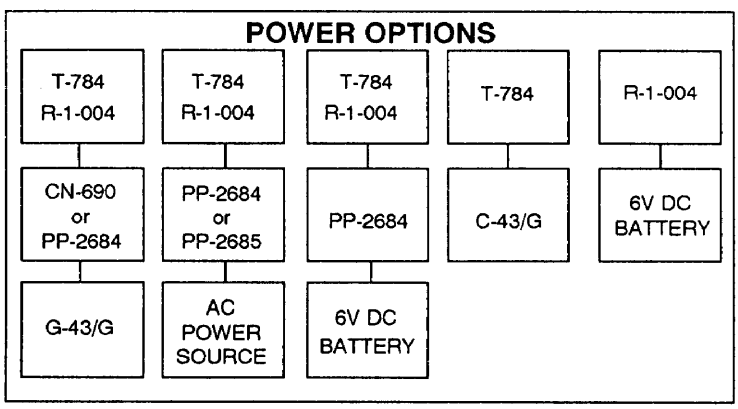

AN/GRC-109
Radio Set

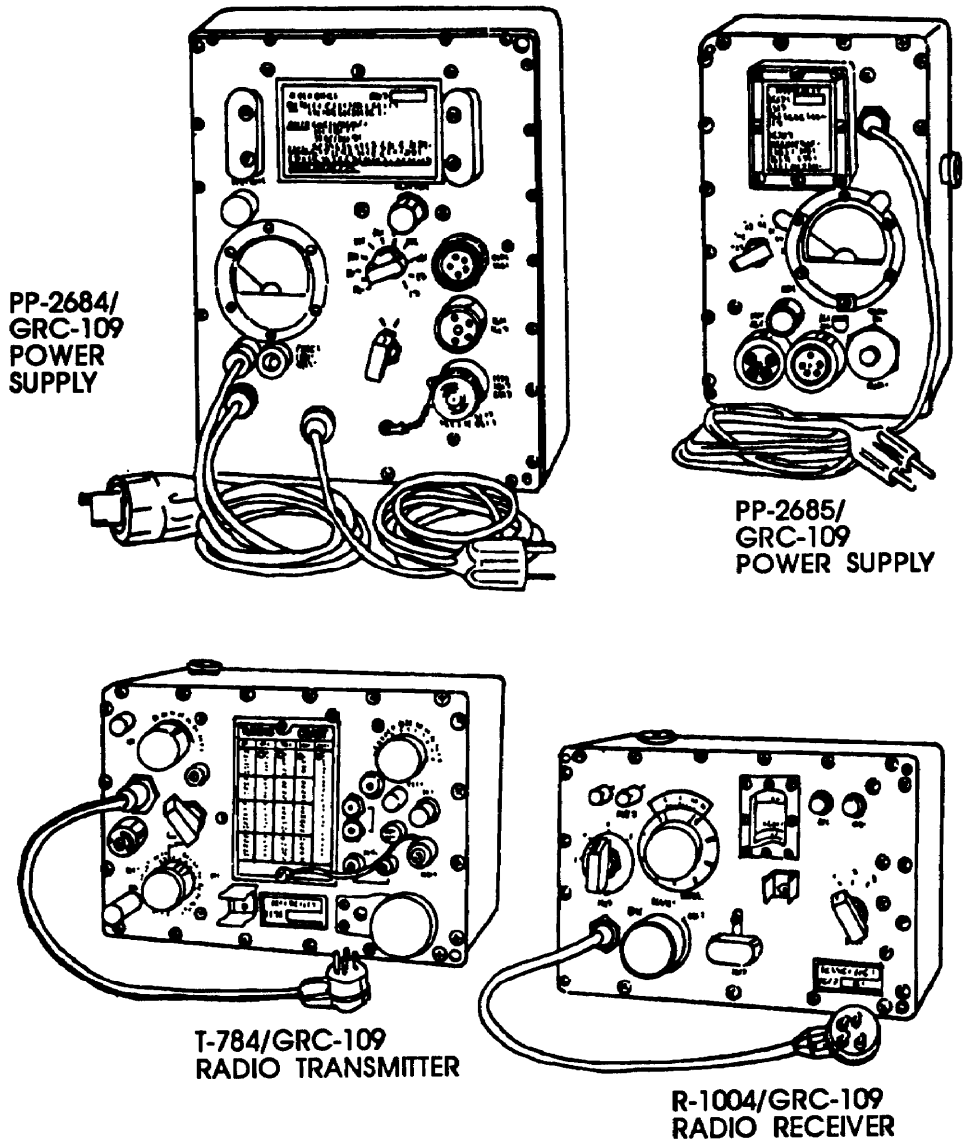

AN/GRC-193
High Frequency Radio Set

NSN: 5820-01-133-4195

Reference: 11-5820-924-12

General Information

The AN/GRC-193 is a medium/high-power vehicular configuration of the Improved High Frequency Radio (IHFR) system. It will satisfy those mission requirements which need an HF radio capability greater than the low power/IHFR system. The high-power vehicular/airborne adaptive configuration consists of a basic receiver-transmitter with required coupling device, amplifier, and other ancillary devices for CW voice or teletype operation; near vertical incidence sky wave (NVIS) antenna, whip antenna, data I/O device, and external power sources. The radio will have the capability of selectable power (100 W, 400 W). Normal operation will be below 400 W. The AN/GRC-193 uses the KY-99 for securing voice traffic and the TSEC/KG-84 for securing data traffic. The antenna may be remoted up to 61 m (200 ft) from the radio set, using the antenna siting bit which is part of the basic configuration.

Technical Characteristics

Frequency Range . . . . . 2 to 29.999 MHz, 100 Hz channel separation
Planning Range . . . . . 2,500 miles (4,023 .3 km)
Number of Channels 280,000
Power Input . . . . . 115 V AC, 50 to 60 Hz, 24 V DC and 26.5 V DC, vehicular
Power Output . . . . . Selectable power, 100 W, 400 W
Antenna . . . . . AT-1011, 4.88 m (16 ft) whip, doublet, long-wire, AN/GRA-50, AS-2259 NVIS
Tuning . . . . . Automatic digitally controlled remote
Remote Operation . . . . . Up to 2 km (1.2 mi) using AN/GRA-39

AN/GRC-193
High Frequency Radio Set

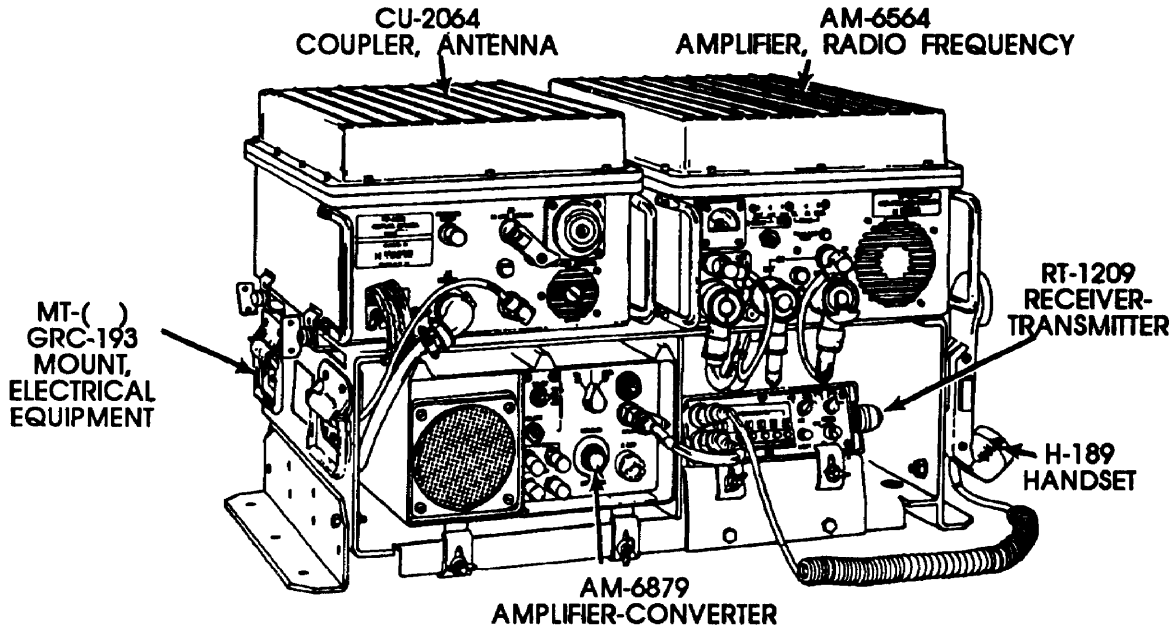

AN-GRC-193A

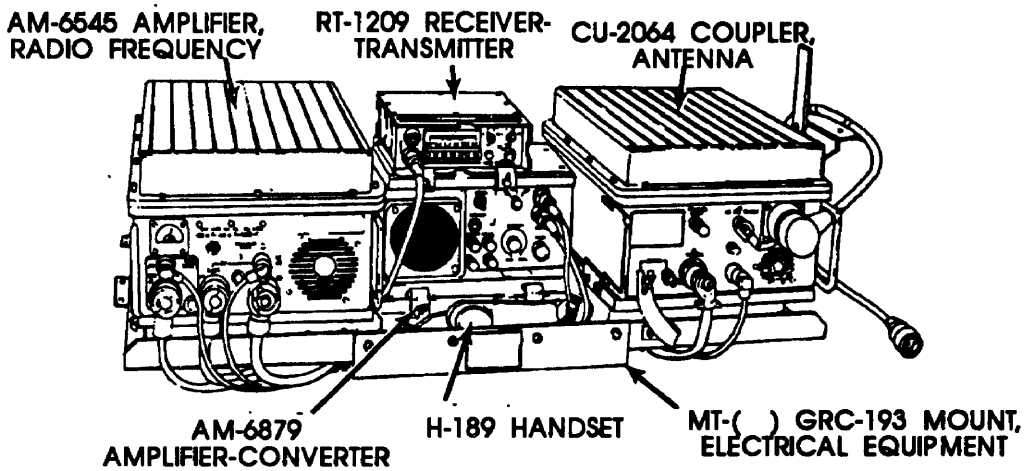

AN-GRC-193B

AN/GRC-213
High Frequency Radio Set

NSN: 5820-01-128-3935

Reference: TM-11-5820-923-12

General Information

The AN/GRC-213 is a low-power manpack/vehicular configuration of the IHFR system. It provides a much needed, reliable, full HF coverage capability of 2 to 29,9999 MHz to tactical commanders. It has a requirement to pass secure, command and control information over medium to long distances and over varying degrees of terrain features which would normally preclude the use of very high frequency (VHF)/FM combat net radios (CNR). Use of broadband or NVIS antennas enhances the communication capability of IHFR. The AN/GRC-213 consists of AN/PRC-104A (complete), audio amplifier and power conditioner, antenna switch (for use with long-wire antennas), and vehicular mounting tray to allow its installation in Army combat vehicles (tracked and wheeled). It gives the commander a complete low-power communications system.

Technical Characteristics

Frequency Range . . . . . 2 to 29.9999 MHz
Number of Channels . . . . . 280,000 spaced at 100 Hz
Power Input . . . . . Battery or 20 to 32 V DC power supply
Power Output, ... 20W
Antenna . . . . . Whip AN/GRA-50, AS-2259
Tuning . . . . . Automatic antenna tuning
Modes of Operation . . . . . Voice, data, CW, LSB, USB
Weight . . . . . 13.6 kg (30lb)
Secure Device . . . . . KY-99, future COMSEC

AN/GRC-213
High Frequency Radio Set

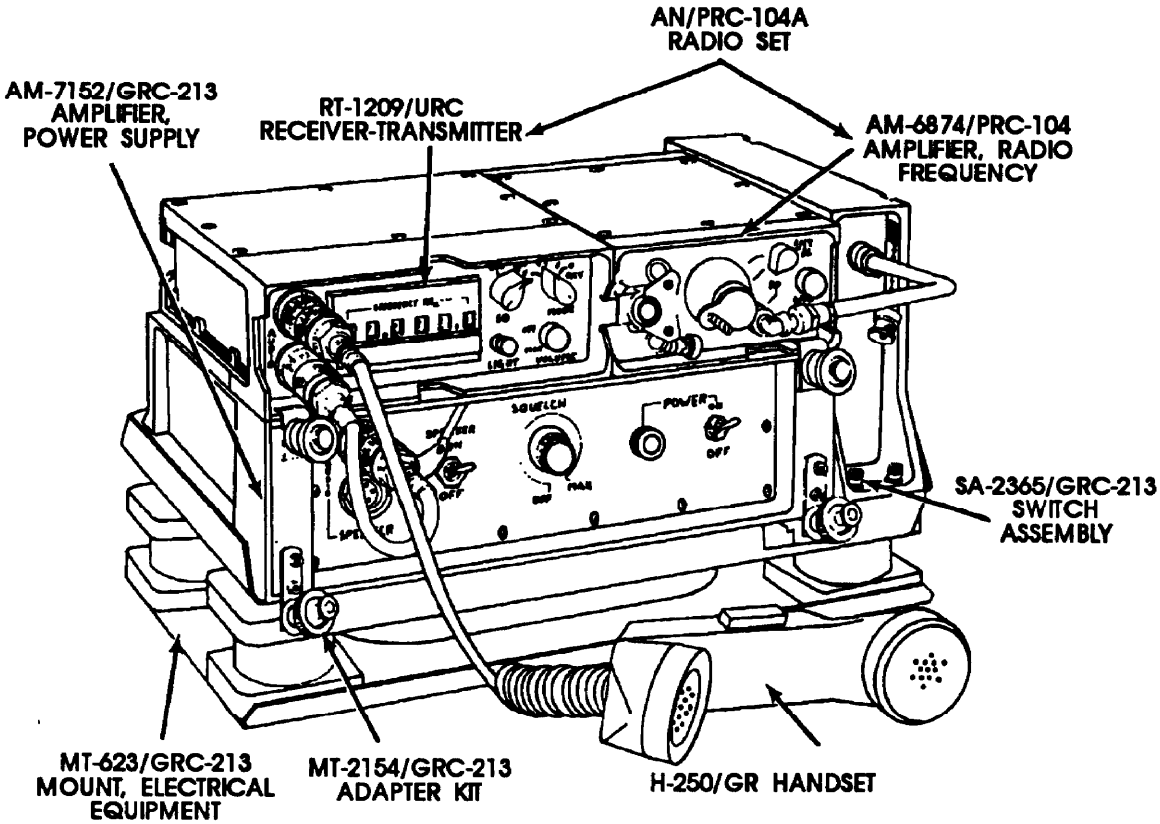

AN/PRC-41 and AN/PRC-41A Radio Sets

NSN: 5820-00-889-3997 (AN/PRC-41)
5820-00-104-0351 (AN/PRC-41A)

Reference: TM 11-5820-510-12 (AN/PRC-41)
TM 11-5820-510-12-1 (AN/PRC-41A)

General Information

The AN/PRC-41 is a lightweight, portable VHF/ultra high frequency (UHF)-AM receiver-transmitter which permits manpack, fixed-station, or vehicular operation. The AN/PRC-41 and AN/PRC-41A are identical except that the AN/PRC-41A can provide secure voice (X-mode) operation when used in conjunction with Speech Security Equipment TSEC/KY-38. The X-mode operation is possible due to circuitry modifications made on the AN/PRC-41A model. The Special Cable CX-10831 is required to connect the TSEC/KY-38 to the AN/PRC-41A. The AN/PRC-41 uses RT-695, and the AN/PRC-41A uses RT-695A.

Technical Characteristics

Frequency Range . . . . . 225.0 to 399.9 MHz
Planning Range . . . . . LOS
Number of Channels . . . . . 1,750, spaced every 100 kHz
Power Input . . . . . 24 V DC
Power Source . . . . . Portable BA-451/U, vehicle power system, aircraft power system, any AC power source (PP-3700/PRC-41 is required to convert the AC voltage to 24 V DC) power
Power Output 3W
Antenna . . . . . AS-l404 or AS-1405
Tuning . . . . . Detent, crystal controlled
Squelch . . . . . Carrier
Type of Service . . . . . AN/PRC-41, 6K00A3E AN/PRC-41A, 80K0A3E (secure or nonsecure)
Weight . . . . . 20 kg (44.6 lb)
Security Device TSEC/KY-38

AN/PRC-41 and AN/PRC-41A Radio Sets

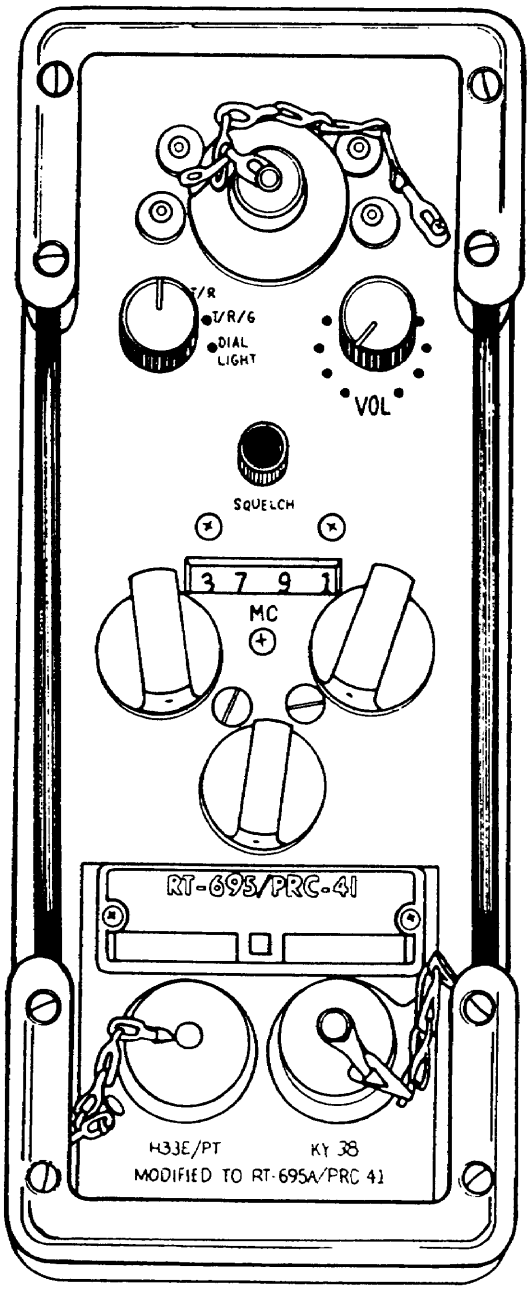

AN/PRC-47
Radio Set

NSN: 5820-00-861-3539

Reference: TM 11-5820-509-12

General Information

The AN/PRC-47 is an HF-SSB radio set which provides CW and upper sideband (USB) voice communications. It also provides FSK communication when operated with an FSK converter. The AN/PRC-47 may be used in portable, vehicular, or fixed-station applications, Current tactical speech security equipment is not compatible with the AN/PRC-47; therefore, secure voice is not a mode of operation.

Technical Characteristics

Frequency Range. . . . . 2.0 to 11.999 MHz
Planning Range . . . . . Refer to short and intermediate distance ground wave and sky wave propagation charts **(FM 11-486-6)**
Number of Channels . . . . . 10,000, spaced every 1 kHz
Power Input . . . . . 24 V DC, 26.5 V DC or 115 V AC, 400 Hz
Power Source . . . . . BB-451/U, vehicle power system, any appropriate AC power source
Power Output . . . . . High, 100 W PEP; low, 20 W PEP
Antenna . . . . . AS-1320/PRC-47, whip; AS-1321/PRC-47, long-wire vehicular whip
Tuning . . . . Digital
Type of Service 3K00J3E, 1K00A1A
Weight . . . . . 86.3 kg (l90 lb)

AN/PRC-47
Radio Set

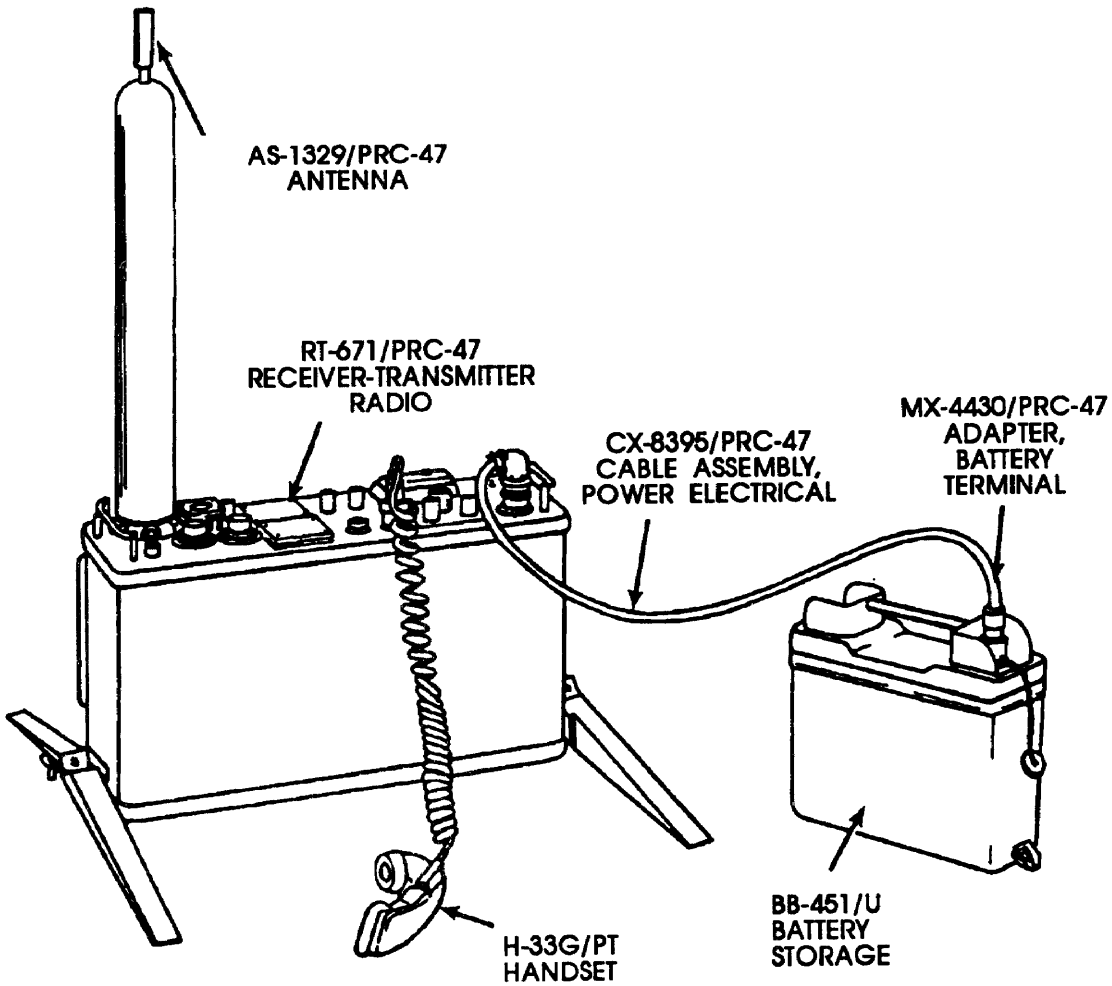

AN/PRC-74
Radio Set

NSN: 5820-00-912-3991 (AN/PRC-74)
5820-00-926-7282 (AN/PRC-74A)
5820-00-935-0030 (AN/PRC-74B)
5820-00-177-1641 (AN/PRC-74C)

Reference: TM 11-5820-590-12
TM 11-5820-590-12-1

General Information

The AN/PRC-74 is a low-power, transistorized, SSB radio set used for voice and CW communications. It is designed primarily as a manpack set in areas where direct line of sight (LOS) communications are not possible. Except for the difference in the frequency range of the AN/PRC-74B and AN/PRC-74C, all models are essentially the same. Current tactical speech security equipment is not compatible with the AN/PRC-74; therefore, secure voice is not a mode of operation. Coder-Burst Transmission Group AN/GRA-71 can be used with all lettered models.

Technical Characteristics

Frequency Range . . . . . 2.0 to 11.999 MHz (AN/PRC-74 and AN/PRC-74A); 2.0 to 17.999 MHz (AN/PRC-74B and AN/PRC-74C)
Planning Range . . . . . 40 km (25 mi) ground wave; refer to sky wave propagation chart to determine medium range, **FM 11-486-6**
Number of Channels . . . . . 10,000 spaced every 1 kHz (AN/PRC-74 and AN/PRC-74A); 16,000 spaced every 1 kHz (AN/PRC-74B and AN/PRC-74C)
Power Input . . . . . 10.5 to 17 V DC, 12 to 31 V DC or 110/220 V AC
Power Source . . . . . Battery (BA-30, 70 each or BB-418/U, 10 each); vehicle power system (requires PP-4514/PRC-74); any appropriate AC power source (requires use of PP-4514/PRC-74)
Power Output . . . . . 15 W PEP
Antenna . . . . . AS-1887/PRC-74, slanted wire and dipole
Tuning . . . . . Detent
Type of service . . . . . -3 K00J3E, 100HA1A
Weight . . . . . 18.8 kg (41.5 lb) with dry Battery BA-4386/U, two each; 13.4 kg (29.5 lb) with wet Battery BB-418/U, 10 each; 22.7 kg (50 lb) with PP-4514/PRC-74

AN/PRC-74
Radio Set

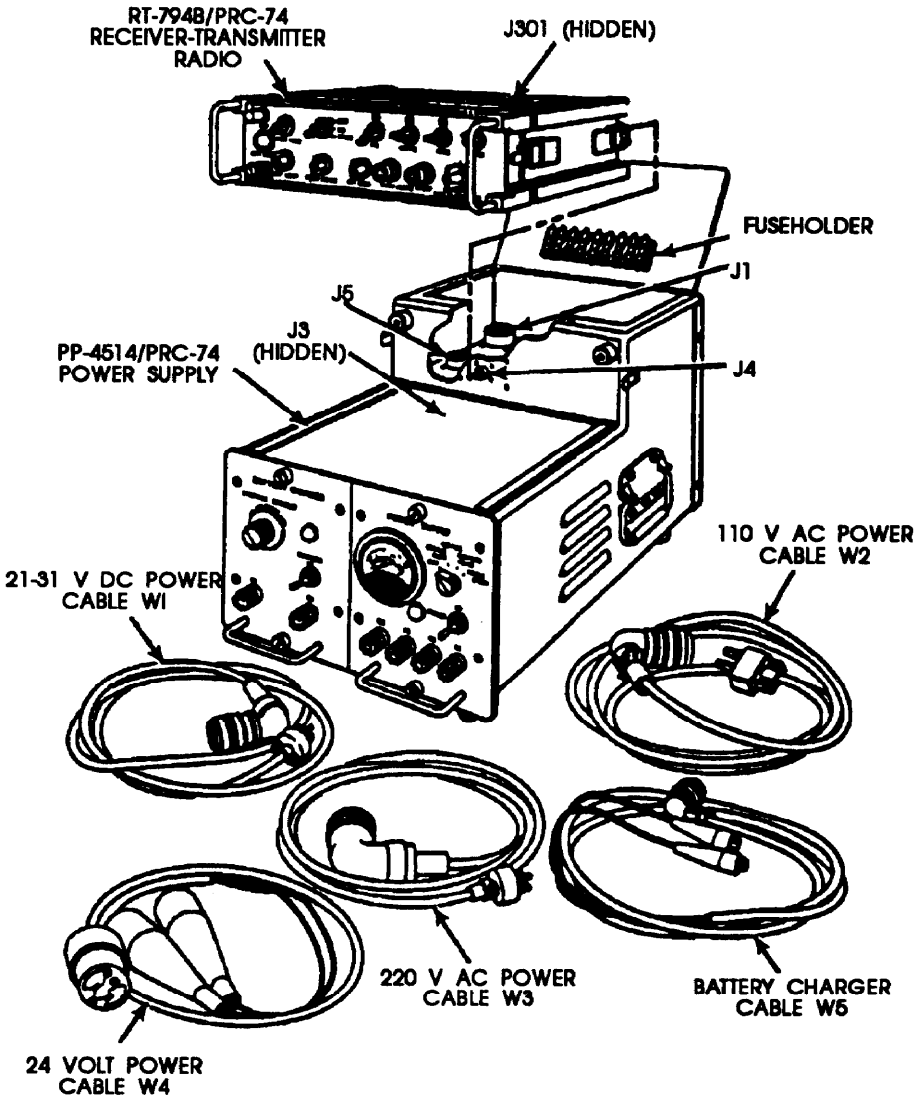

AN/PRC-104A
High Frequency Radio Set

NSN: 5820-01-141-7953

Reference: TM 11-5820-919-12

General Information

The AN/PRC-104A is a low-power vehicular configuration of the IHFR system. It provides a much needed, reliable, full HF coverage capability of 2 to 29.9999 MHz to tactical commanders. It has a requirement to pass secure, command and control information over medium to long distances and over varying degrees of terrain features which would normally preclude the use of VHF/FM CNR. Use of broadband or NVIS antennas enhance the communication capability of IHFR. The AN/PRC-104A consists of a receiver-transmitter with up to 20 watts of power, the associated accessories (microphone, antenna, battery, backpack), and the appropriate secure device. The AN/PRC-104A has a frequency range of 2 to 29.9999 MHz in 100 Hz steps yielding 280,000 channels and operates in the USB, lower sideband (LSB), and CW modes. It provides the tactical commander with a complete low-power communications system.

Technical Characteristics

Frequency Range	2 to 29.999 MHz
Number of Channels	280,000 spaced at 100 Hz
Power Input	Battery or 20 to 32 V DC power supply
Power Output	20 W
Antenna	AN/GRA-50, AS-2259 NVIS
Tuning	Automatic anteena tuning
Mode of Operation	Voice, Data, CW, LSB, USB
Weight	6.36 kg (14 lb)
Secure Device	KY-99

AN/PRC-104A
High Frequency Radio Set

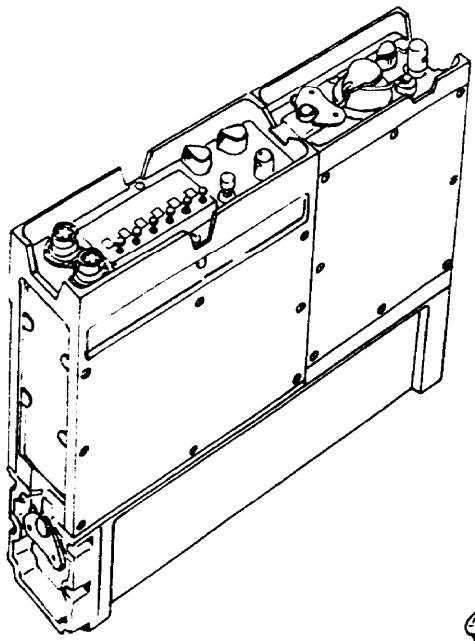

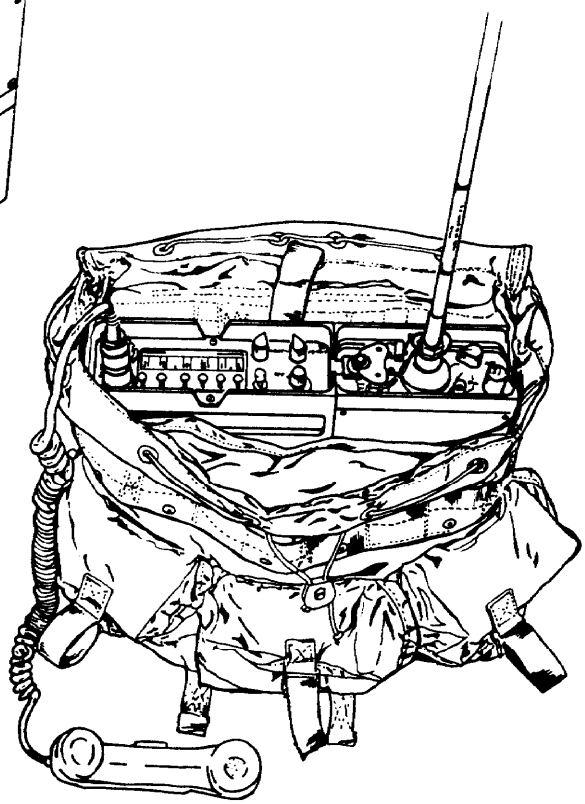

AN/PRC-112
Multi-Transmission Transceiver

*** This radio is an over-the-counter commercial purchase obtained by the US Army.**

NSN: 5820-01-279-5450

Reference: TM 11-5820-1037-13NP

General Information

The AN/PRC-112 is a technologically advanced, multi-transmission transceiver weighing only 28 ounces and can fit in the palm of your hand. The radio acts as a transponder, supplying ranging and personnel identification information. It also performs beacon and air-to-ground voice functions. Combined with an interrogator equipped avionics system, a user location can be accurately determined in range and bearing, out to 100 nm.

Technical Characteristics

Frequency Range	121.5 MHz 225 MHz to 299.975 MHz
Available Channels	3000 in 25 kHz steps
Frequency Stability	+/-5 ppm
Modulation Modes	AM voice AM swept-tone beacon Transpond mode: BPSK/OOK
Operating Modes	Voice: any channel Swept-tone beacon: 121.5 MHz and 243 MHz DME transpond: any UHF channel
Weight	28 ounces or 0.79 kg with battery

AN/PRC-112
Multi-Transmission Transceiver

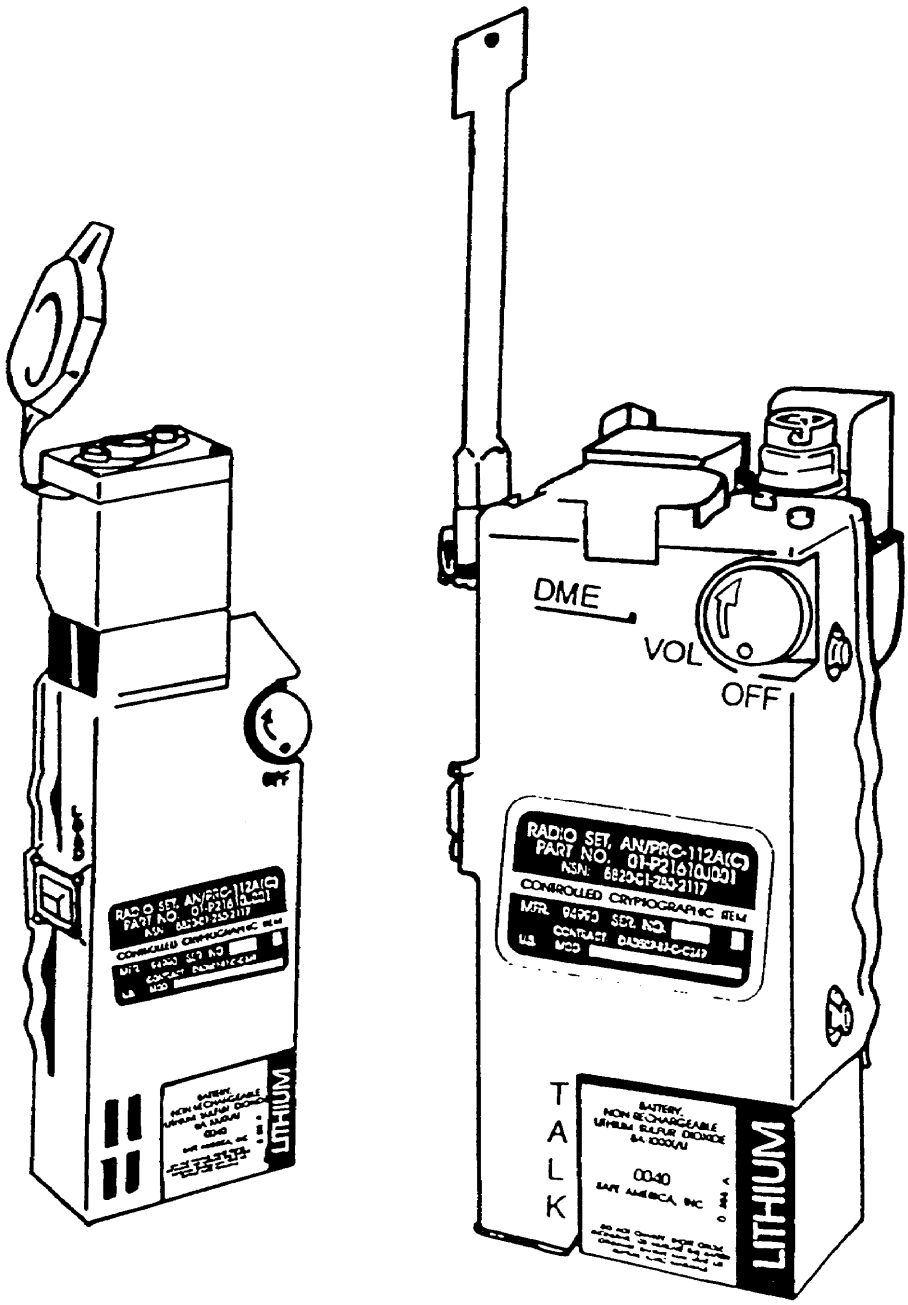

AN/PRC-112A(C)
Multi-Transmission Radio with Embedded Communications Security

*** This radio is an over-the-counter commercial purchase obtained by the US Army.**

NSN: 5820-01-280-2117

Reference: Not available

General Information

The AN/PRC-112A(C) provides full voice encryption using Motorola's field proven INDICTOR module. Designed for covert and hostile environment operations, the AN/PRC-112A(C) provides interoperability with key COMSEC devices including the Sunburst II Processor (AN/CSZ-1A) and VINSON (KY-57). Slightly larger than the standard AN/PRC-112, the AN/PRC-112A(C) will slip easily into uniform pockets, rucksacks and other transport compartments. The AN/PRC-112A(C) is an NSA endorsed, Type I secure voice, ground-to-air communications radio. A mode control switch selects between two key variables for secure voice, a zeroize-key function and a clear "plain text" voice mode. This radio will automatically receive and process clear "plain text" voice transmissions even when configured in a secure voice mode. The built-in transponder beacon supplies ranging and personnel identification information via the airborne AN/ARS-6 interrogator system.

Technical Characteristics

Frequency Range ..... 121.5 MHz
225 to 299,975 MHZ
Available Frequencies ..... 3000 in 25 kHz steps
Frequency Stability ..... +/-5 ppm
Modulation Modes ..... Secure--AM, 16 kb/s CVSD AM voice
AM swept-tone beacon
Transponder-BPSK/OOK
Operation Modes ..... Secure voice--2 selectable key variables
Key variable zeroize switch Voice: clear
Sweep-tone beacon: 121.5 MHz and 243 MHz
DME transpond: any UHF channel
Weight ..... 36.5 ounces or 1.0 kg (with battery)

AN/PRC-112A(C)
Multi-Transmission Radio with Embedded Communications Security

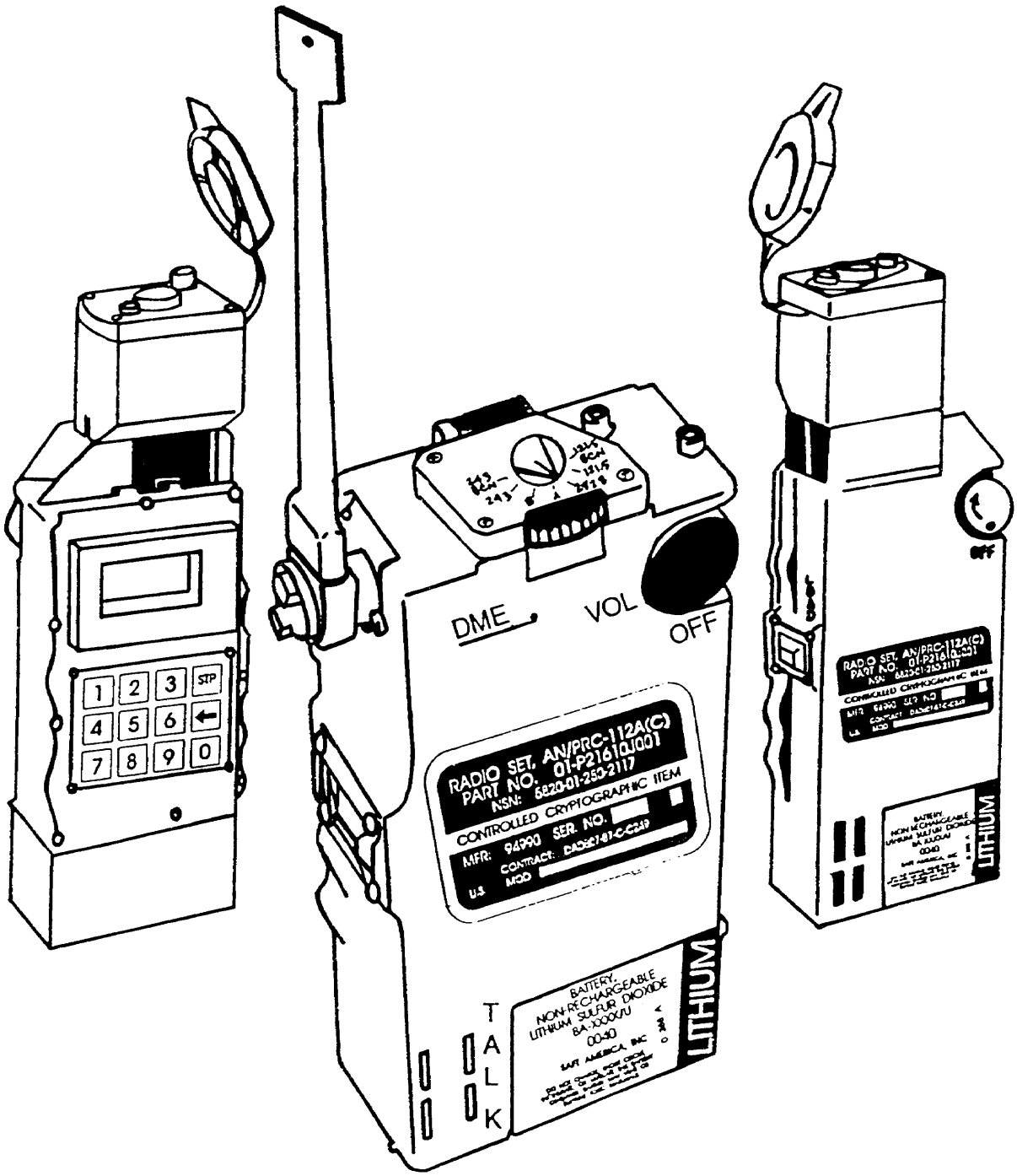

AN/TRC-133A
Radio Terminal Set

NSN: 5820-00-464-1616

Reference: TM 11-5820-610-14

General Information

The AN/TRC-133A is a transportable, tactical HF, nonsecure SSB radio terminal set mounted in an S-280A type shelter. The shelter contains five radio positions which can be connected to separate doublet antennas provided as part of the radio terminal. Positions 1 and 2 can be operated with separated 15-foot whip antennas, which are used when the radio terminal set is needed for mobile operation and powered from the 28-volt DC vehicular electrical system. In addition, Radio Frequency Amplifier AM-3979/FRC-93 is provided to allow any one of the five positions to transmit on increased output power to extend the operating range of the position so selected. Current tactical speech security equipment is not compatible with the AN/TRC-133A; therefore, secure voice is not a mode of operation.

Technical Characteristics

Type of Service . . . . . 3K00J3E (selectable USB or LSB), 100HA1A, 1K10A1A
Frequency Range . . . . . 3.4 to 5.0 MHz and 6.5 to 30 MHz
Planning Range . . . . . Ground wave, 80 km(50mi); sky wave, see intermediate sky wave propagation chart **FM 11-486-6**
Number of Channels . . . . . 130, crystal controlled
Power Input . . . . . 110 V AC, 60 MHz, single phase and 28 V DC (max) for mobile mode
Power Source . . . . . 10 kW, Power Supply PU-619
Power Output . . . . . RT-718, 100 W PEP; RT-718 with AM-3979, 1,000 W PEP
Antenna . . . . . Quarter-wave whip or doublet antenna
Tuning . . . . . Continuous in 200 kHz bands using CK-31
Weight . . . . . 2,272.2 kg (5.000 lb)
Limitation . . . . . Nonsecure operation

AN/TRC-133A
Radio Terminal Set

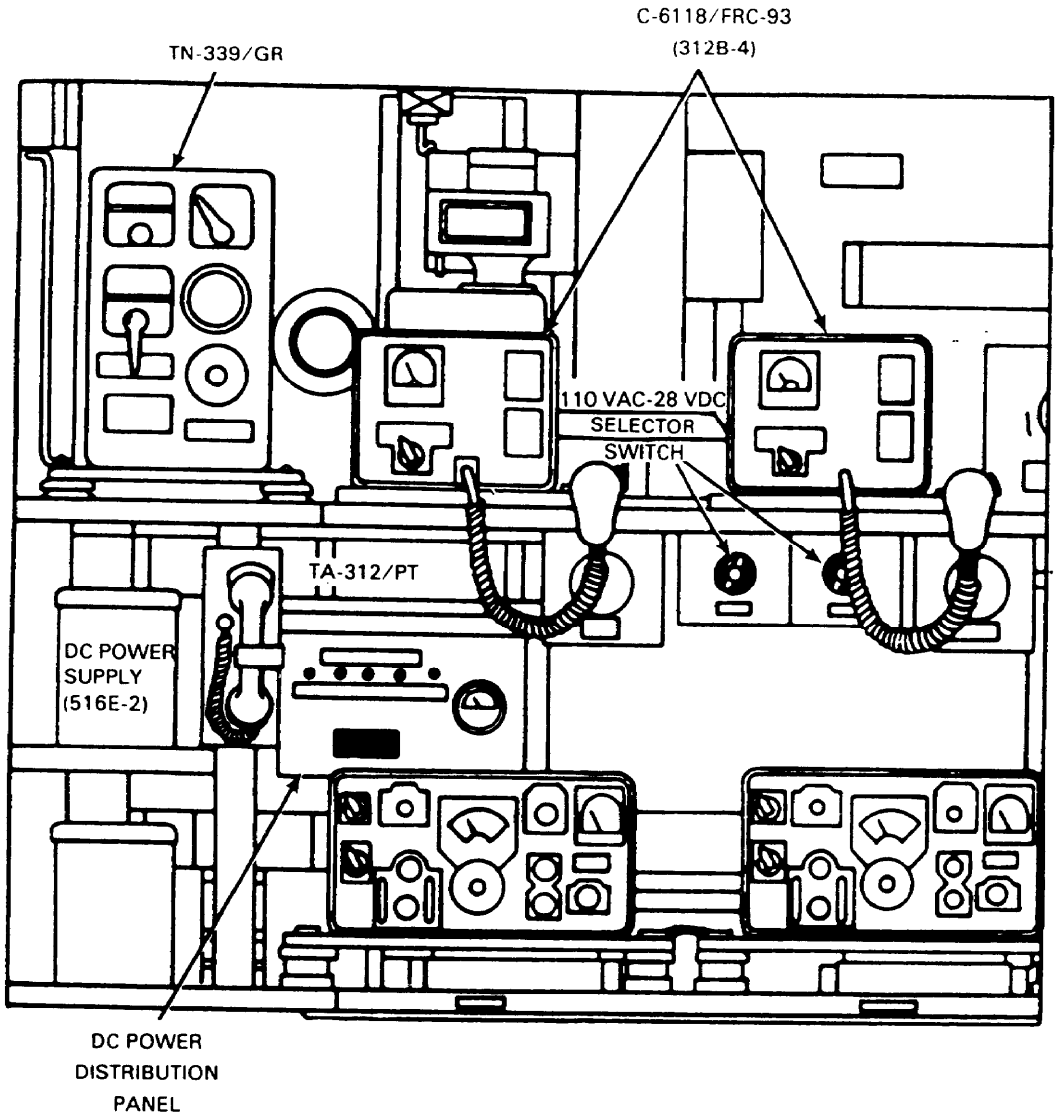

AN/TRQ-35(V)
Tactical Frequency Sounding System

NSN: Not available

Reference: Not available

General Information

The AN/TRQ-35(V) is an ionospheric sounding system that produces easy to understand ionospheric propagation statistics on a real-time basis. The system is used to minimize outages related to unpredictable changes of ionospheric characteristics and conditions. It is intended to improve frequency management and assignments of frequencies for HF communications systems, result in more effective and efficient use of the HF spectrum, and produce more reliable HF communications with improved grade of service. The AN/TRQ-35(V) system consists of the following stand-alone components.

Major Components

1 Receiver R-2081/TRQ-35(V)
1 Transmitter T-1373/TRQ-35(V)
1 Spectrum Monitor R-2093/TRQ-35(V)

Technical Characteristics

Frequency Range . . . . . 2 to 30 MHz
or 2 to 16 MHz coverage after selection
Number of Channels 9,333
Channel Spacing . . . . . 3.0 kHz
Power Input . . . . . 115/230 V AC ± 10%, 47 to 440 Hz
Transmitted Power . . . . . 0.2 W and 2 W from diplexer,
± 3 dB selectable by front panel switch;
10 W and 100 W nondiplexed output power, ± 3 dB
Weight . . . . . Transmitter 113.4 kg (250 lb) in case,
Receiver 79.4 kg (175 lb) in case,
Spectrum Monitor 79.4 kg (175 lb) in case

AN/TRQ-35(V)
Tactical Frequency Sounding System

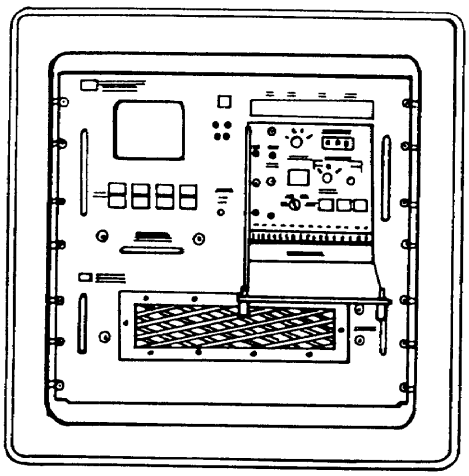

R-2081/TRQ-35(V)

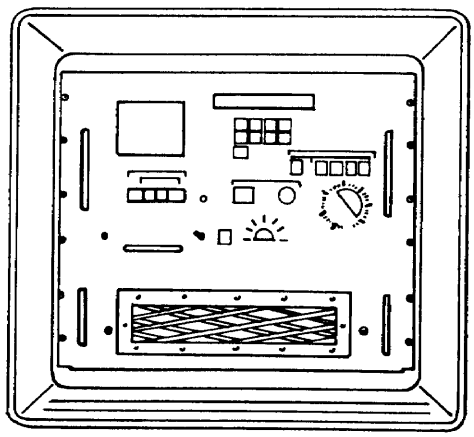

R-2093/TRQ-35(V)

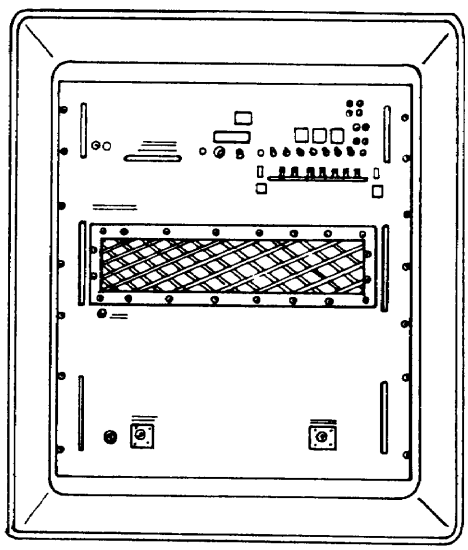

T-1373/TRQ-35(V)

AN/VRC-24A and AN/TRC-68A Radio Sets

NSN: 5820-00-223-7413 (AN/VRC-24A)
5820-00-892-3723 (AN/TRC-68A)

Reference: TM 11-5820-222-10

General Information

The AN/VRC-24A and the AN/TRC-68A are VHF/UHF-AM radio sets used for communications with aircraft in close support of ground operations. The AN/VRC-24A is designed for vehicular installation, and the AN/TRC-68A is designed for fixed installation. These radio sets will provide secure voice (X-mode) service when used in conjunction with Speech Security Equipment TSEC/KY-99.

Technical Characteristics

Frequency Range . . . . . 225.0 to 399.9 MHz
Planning Range . . . . . Approximately 50 km (31 mi) with aircraft at 305 m (1,000 ft)
Number of Channels . . . . . 1,750 with a channel every 100 kHz
Power Input . . . . . 24 V DC or 115/230 V AC, 50 to 60 Hz
Power Source . . . . . Vehicle power system, any appropriate AC power source
Power Output . . . . . 16 W
Antenna . . . . . AN/VRC-24A, AT-803/VR (center-fed, broadband vertical dipole) AN/TRC-68A, AT-197/GR (discone with two radiator assemblages)
Tuning . . . . . Detent
Squelch . . . . . Noise or carrier
Type of Service . . . . . 6K00A3E or 30K0A3E, X-mode operation
Weight . . . . . AN/VRC-24A, 28.1 kg (62 lb), AN/TRC-68A, 70.4 kg (155 lb)

AN/VRC-24A and AN/TRC-68A Radio Sets

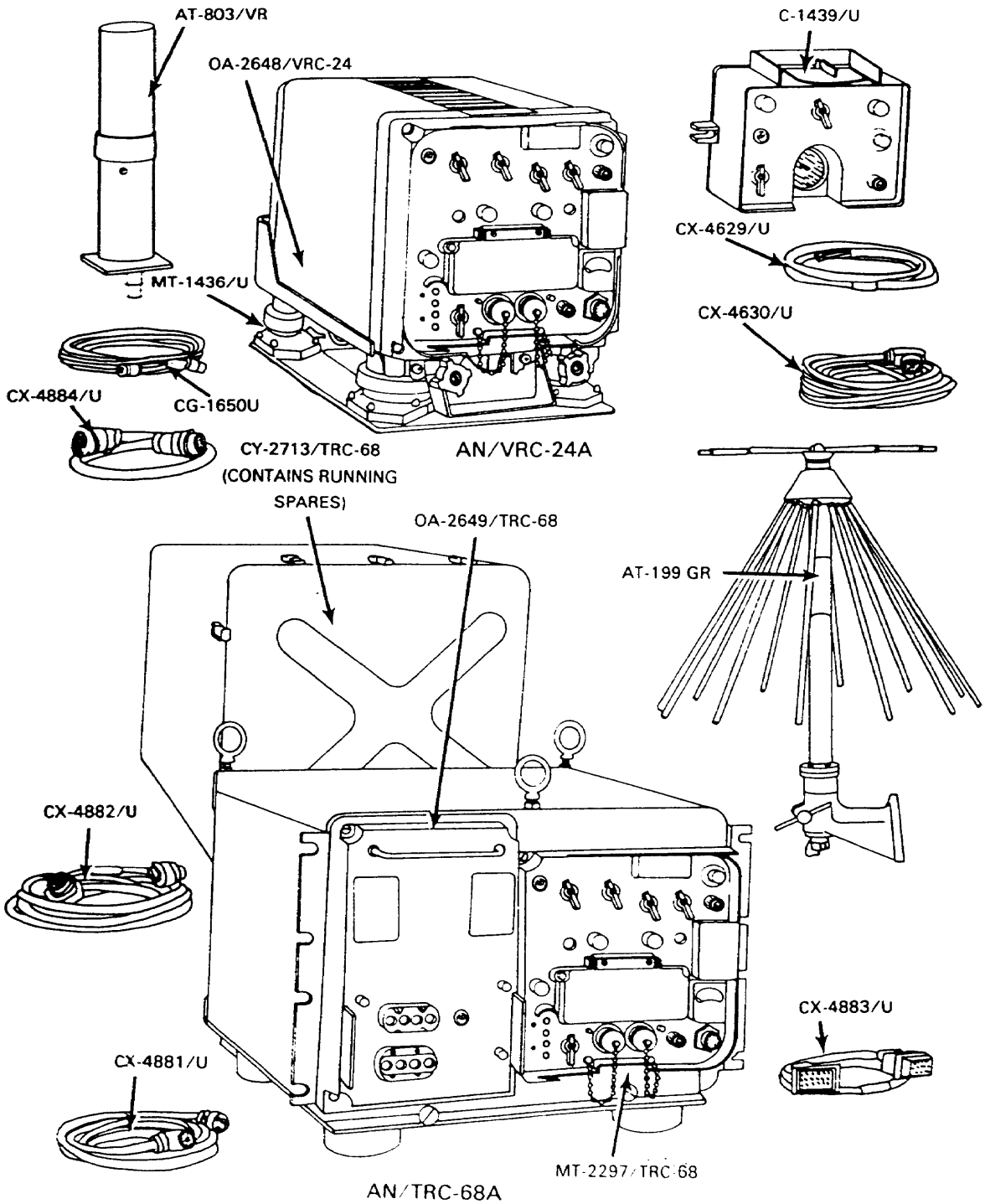

Section III. Auxiliary Radio Equipment

AB-903/G
Mast

NSN 5985-00-933-2197

Reference: TM 11-5985-263-15

General Information

The AB-903/G is a cable-driven, lightweight, telescopic mast assembly. A crank handle attached to the winch assembly is used to raise or lower the mast. The mast raises antennas, such as Antenna AS-1729/VRC used for the AN/VRC-122 radio series, 30 feet above ground level. The mast may be setup on the ground or mounted on vehicles.

Technical Characteristics

Height Extended . . . . . 8.9 m (29 ft, 3 in)
Number of Tubular Segments 6
Weight . . . . . 18.16 kg (40lb)

AB-903/G
Mast

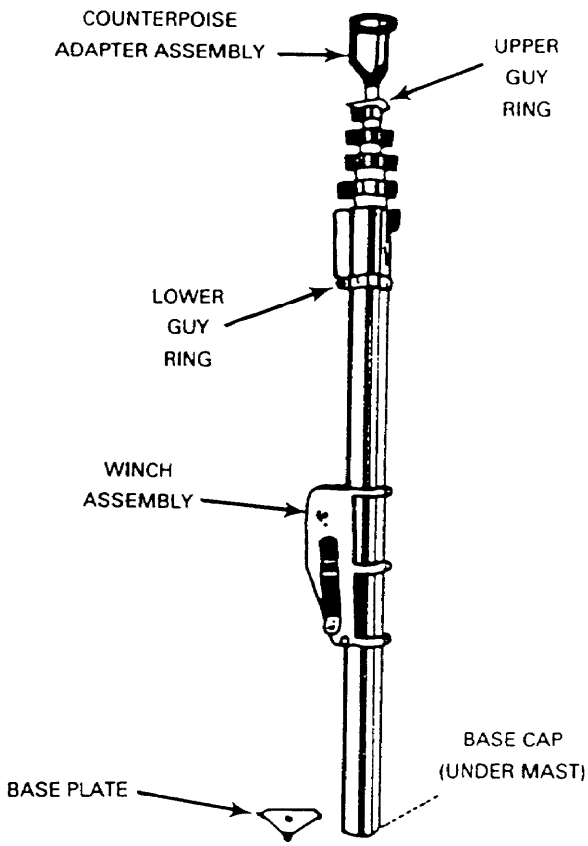
COUNTERPOISE
ADAPTER ASSEMBLY
UPPER
GUY
RING
LOWER
GUY
RING
WINCH
ASSEMBLY
BASE CAP
(UNDER MAST)
BASE PLATE

AN/GRA-6
Receiver-Transmitter Control Group

NSN: 5820-00-644-4554

Reference: TM 11-5820-489-34

General Information

The AN/GRA-6 provides local and remote control facilities for various push-to-talk radio sets. The control group has the means for controlling and operating a radio set using one or two transceiver amplifiers of the push-to-talk type from a position approximately 3.2 km (2 mi) away. The control group provides local control of the radio set through a continuous DC circuit. It provides two-way telephone communication and ringing between the remote and local control operators.

Technical Characteristics

Frequency Range	300 to 3500 HZ
Planning Range	3.2 km (2 mi), using WD-1/TT
Power Input	6 V DC and 45V DC
Power Source	Battery BA-414/U (one each) and BA-30 (four each)
Type of Service	30K0F3E
Weight	7.9 kg (17.5 lb)

AN/GRA-6
Receiver-Transmitter Control Group

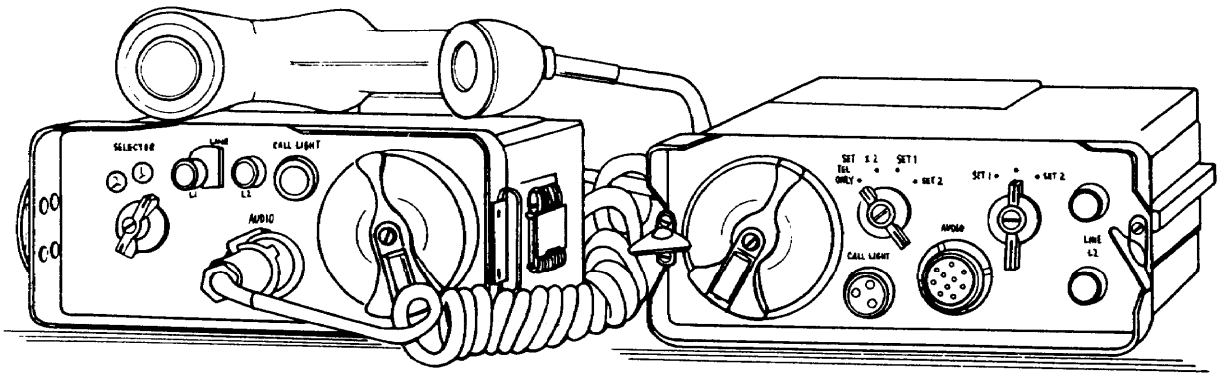

C-433 C-434

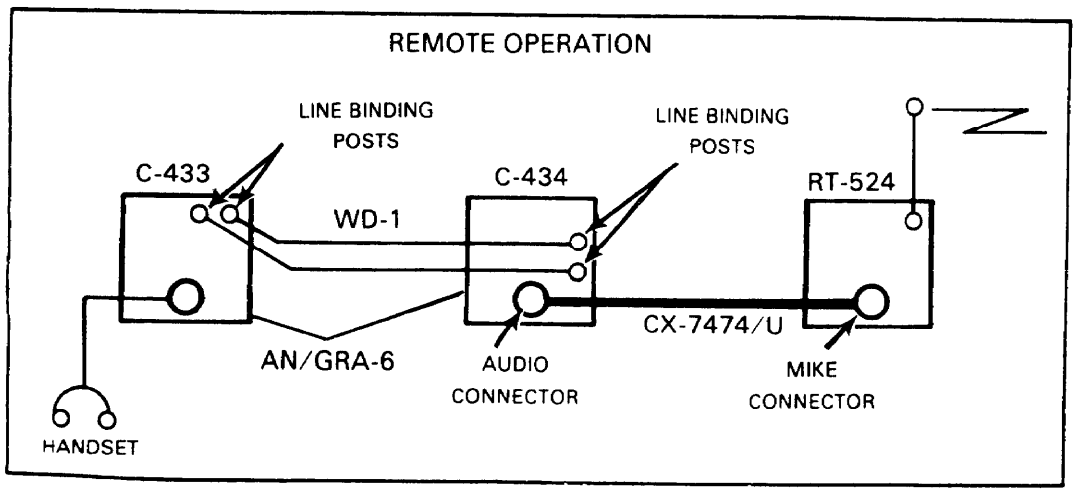

AN/GRA-39, AN/GRA-39A, and AN/GRA-39B Radio Set Control Groups

NSN: 5820-00-889-3860 (AN/GRA-39)
5820-00-082-3998 (A.N/GRA-39A)
5820-00-949-9909 (AN/GRA-39B)

Reference: TM 11-5820-477-12

General Information

The AN/GRA-39 is a transistorized, battery-operated remote control system. It enables an operator to transmit and receive voice communication through a radio set from a distance up to 3.2 km (2 mi). A push-to-talk circuit permits the radio in the system to be operated by a local battery switchboard and the telephones connected to a local battery switchboard which permits NRI. The difference in models is the displayed call lamp, located on the front panel; the AN/GRA-39 model does not have this feature.

Technical Characteristics

Frequency Range . . . . . 300 to 3500 Hz
Planning Range . . . . . 3.2 km (2 mi) using WD-1/TT
Power Input . . . . . 6.6 to 9.0 V DC
Power Source . . . . . Battery BA-30, six each for C-2328 and C-2329
Type of Service 30K0F3E
Weight . . . . . 9.6 kg (21.25 lb)

AN/GRA-39, AN/GRA-39A, and AN/GRA-39B Radio Set Control Groups

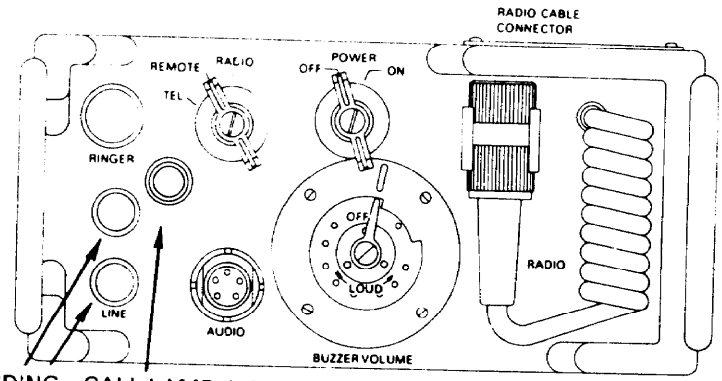

BINDING POSTS CALL LAMP (NOT PROVIDED IN PLAIN MODEL)

C-2329

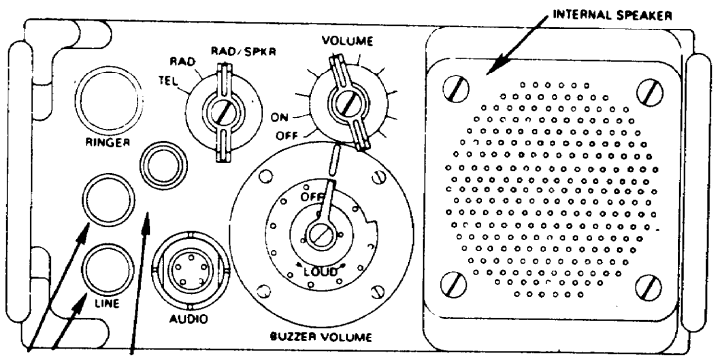

BINDING POSTS CALL LAMP (NOT PROVIDED IN PLAIN MODEL)

C-2328

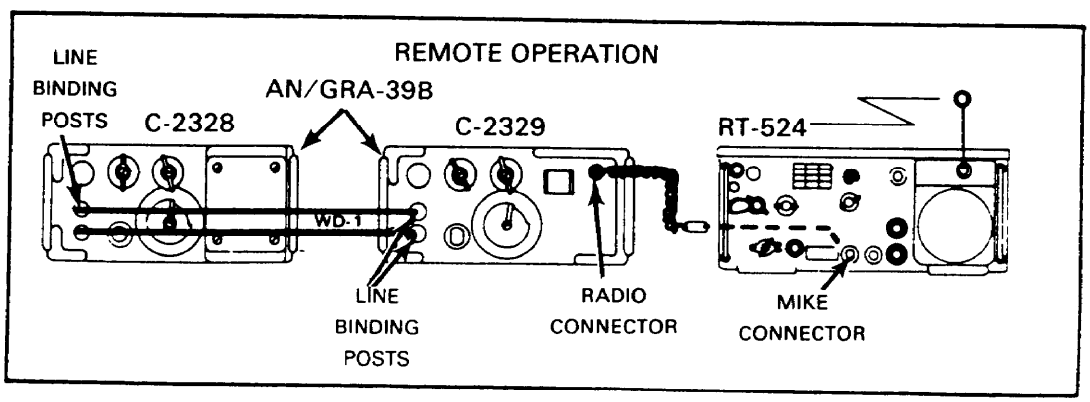

AN/GRA-50
Antenna Group

NSN: 5985-00-892-0758

Reference: TM 11-5820-467-15

General Information

The AN/GRA-50 is a doublet antenna assembly designed to increase the communications distance of HF radio sets when in fixed or semifixed installation. The AN/GRA-50 can be used with any HF radio set that has the proper frequency range and a transmitter output power of less than 500 W and an output impedance of approximately 50 ohms.

Technical Characteristics

Frequency Range . . . . . 1.5 to 30 MHz
Antenna Type . . . . . Half-wave doublet
Weight . . . . . 5.3 kg (11.75 lb)

AN/GRA-50
Antenna Group

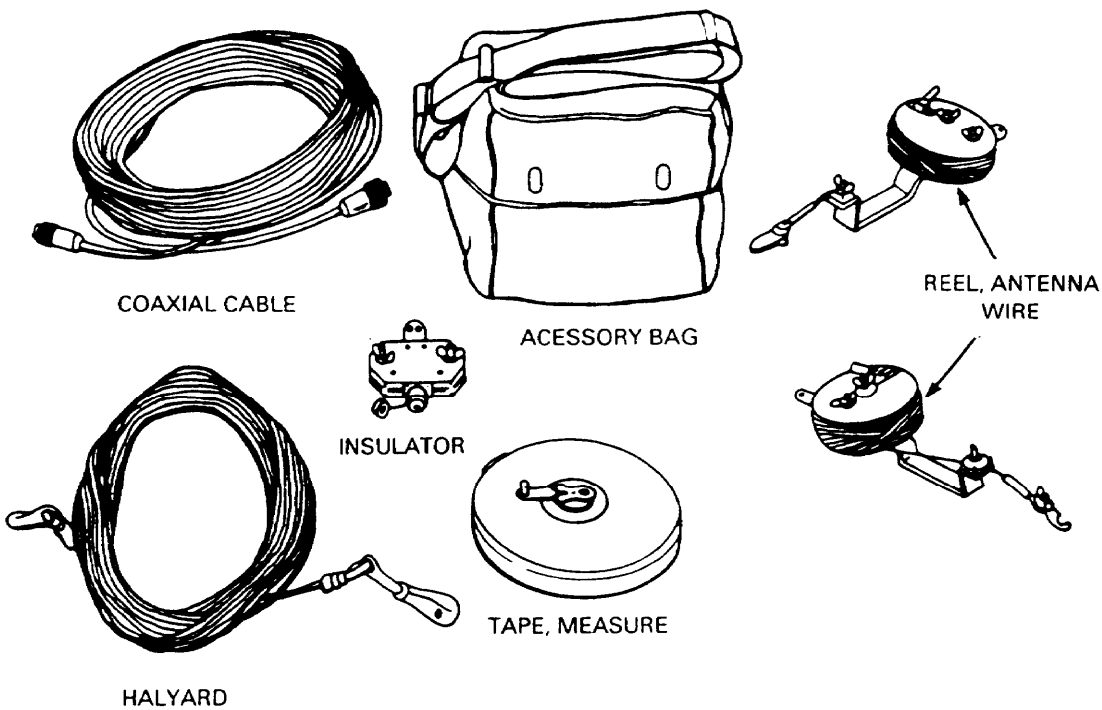

AN/GRA-71
Coder-Burst Transmission Group

NSN: 5820-00-056-6856

Reference: TM 11-5835-224-12

General Information

The AN/GRA-71 is composed of an electromechanical Morse-code generator that enables an operator to record messages (in Morse-code characters) on magnetic recording tape. It has a keyer device to convert the tape-recorded Morse-code characters into equivalent electrical impulses for keying an associated transmitter and a keyer adapter device that contains the electronic circuitry for supplying power to the keyer unit and adapting its output to the transmitter.

Technical Characteristics

Power Input . . . . . Spring motor drive Keyer KY-468 and 6.3 V AC from transmitter to MX-4498
Power Output . . . . . Electrical signals for keying transmitter for 300 wpm
Weight . . . . . 4.3 kg (9.5 lb)

AN/GRA-71
Coder-Burst Transmission Group

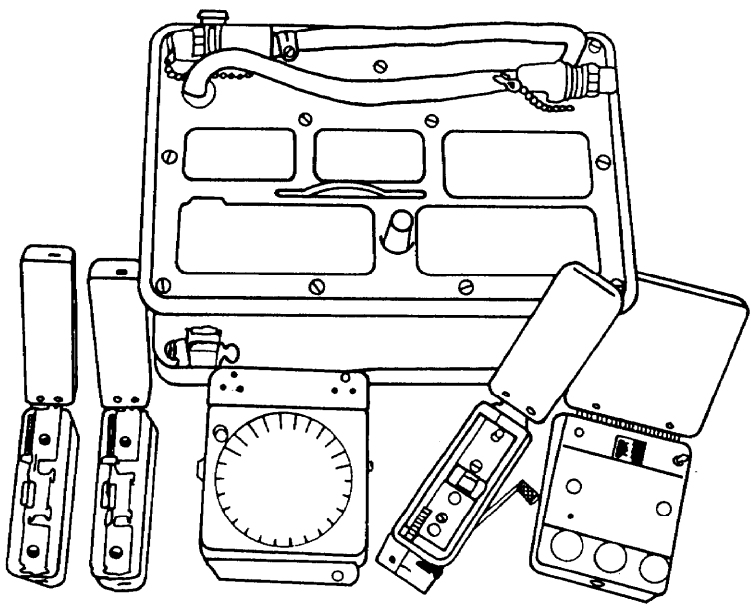

AN/GSA-7
Radio Set Control

NSN: 5820-00-543-1397

Reference: TM 11-5135-15

General Information

The AN/GSA-7 is a small, lightweight, electronic switching device used to integrate FM radio equipment with local, push-to-talk, telephone circuits NRI. It permits the AN/GSA-7 operator to key the transmitter, and it automatically converts a 20-Hz telephone ringing signal to a 1600-Hz radio ringing signal and vice versa.

Technical Characteristics

Frequency Range ..... 300 to 3500Hz
Planning Range ..... 16 km (10 mi), using WD-1/TT
Power Input ..... 22 to 30 V DC or 115/230 V AC, 50 to 400 Hz
Power Source ..... Vehicle power or AC power source
Type of Service 30K0F3E
Weight ..... 12.5 kg (27.5 lb)

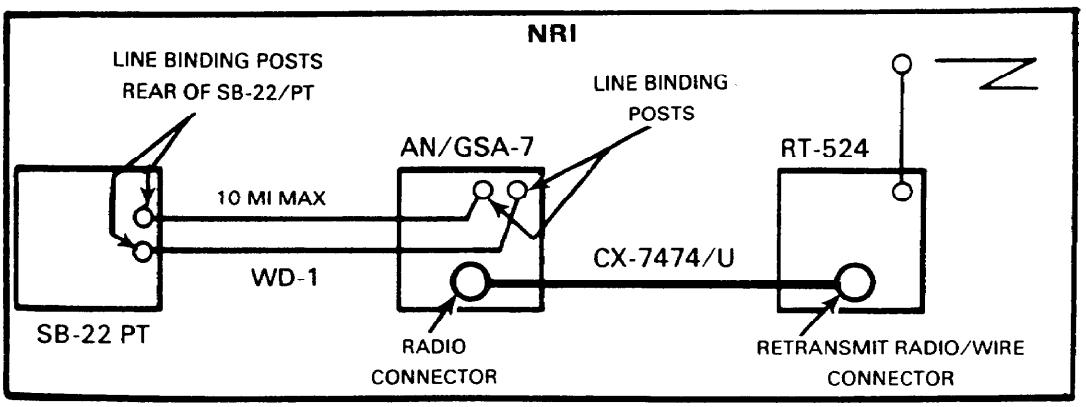

AN/GSA-7
Radio Set Control

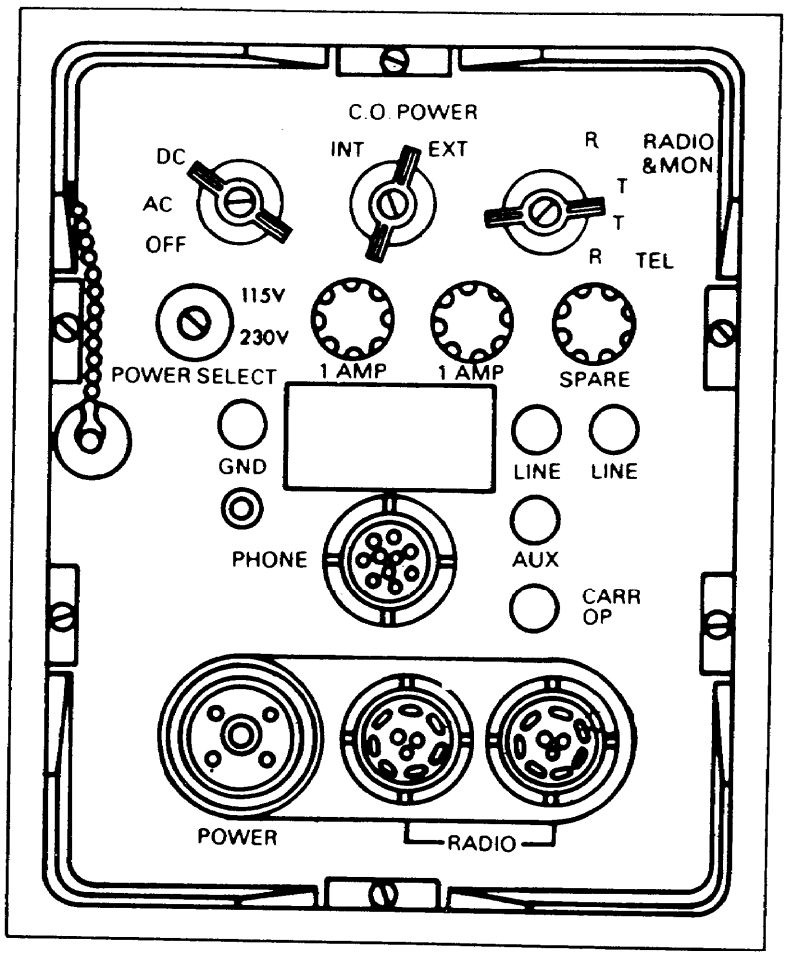

AT-784/PRC
Loop Antenna

NSN: 5820-00-086-7651

Reference: TM 11-5985-284-15

General Information

The AT-784/PRC is a direction finder device which is used in conjunction with FM Radio Sets AN/PRC-77, AN/VRC-12 series, or their equivalents. It enables the operator to determine the direction of a transmitted radio signal. The AT-784/PRC is used for reception only.

Technical Characteristics

Frequency Range ..... 30 to 76 MHz covered in five bands
Planning Range ..... Depends on radio set used
Weight ..... 1.1 kg (2.5 lb)

AT-784/PRC
Loop Antenna

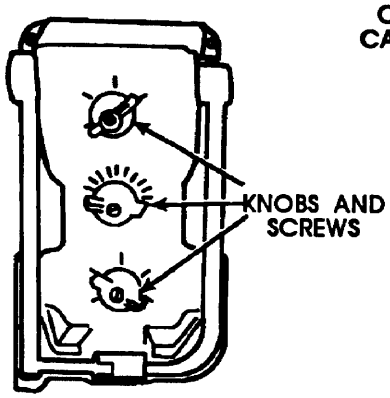

AT-1082/PRC ANTENNA

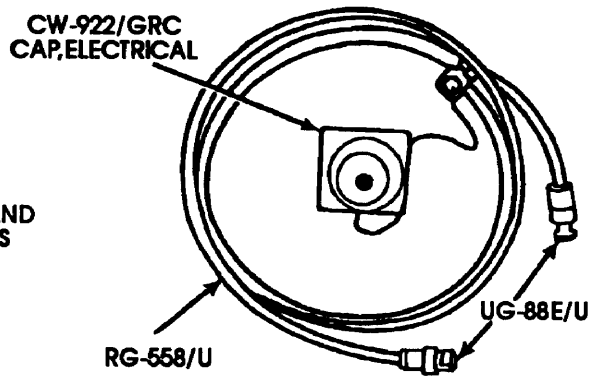

CG-3344/PRC
CABLE ASSEMBLY RADIO
FREQUENCY (5FT)

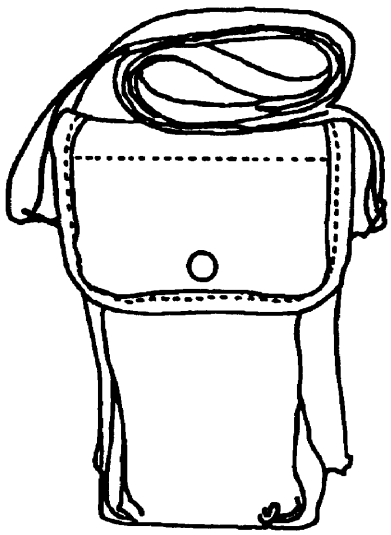

CW-445/PRC
BAG, COTTON DUCK

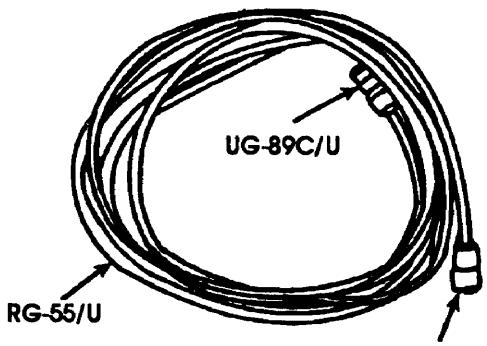

CG-3344/PRC
CABLE ASSEMBLY RADIO
FREQUENCY (5FT)

AT-984A/G
Long-Wire Antenna

NSN: 5820-00-926-0201

Reference: TM 11-5820-398-12

General Information

The AT-984A/G is a multiple-wavelength long-wire antenna. It is used to extend the normal transmission and reception range of radio sets equipped with Receiver-Transmitters RT-505/PRC-25 and RT-841/PRC-77.

Technical Characteristics

Frequency Range. . . . . 30 to 76 MHz
Planning Range. . . . . 19 km (12 mi), long-wire to whip antenna; 28 km (17 mi), long-wire to long-wire antenna
Weight. . . . . 4.5 kg (10 lb)

AT-984A/G
Long-Wire Antenna

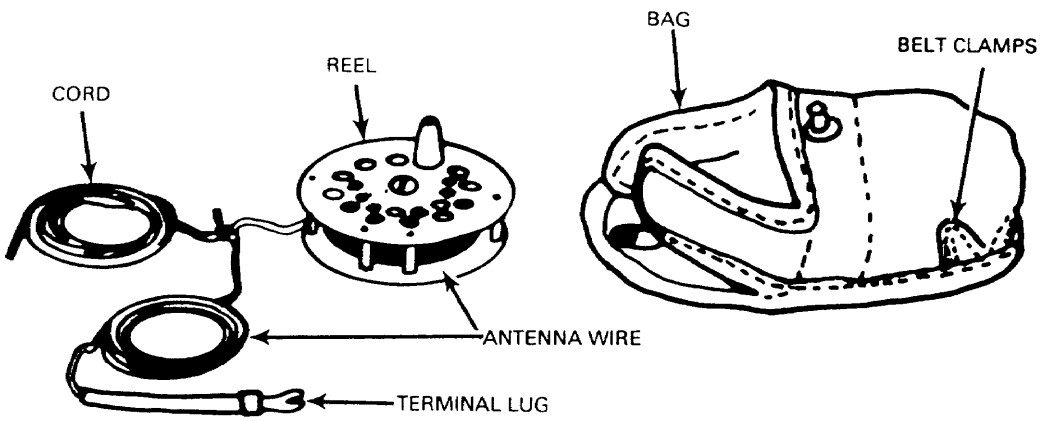

C-6709/G
Control, Radio Set

NSN: 5820-00-930-3597

Reference: TM 11-5820-615-12

General Information

The C-6709/G is a single channel, solid-state NRI. The operator at the C-6709/G receives requests either from the radio link or the switchboard and establishes the interconnection. The C-6709/G can be used with automatic switchboards such as the AN/TTC-41(V), enabling a DTMF telephone subscriber to key and unkey the radio using the key sender on the telephone.

Technical Characteristics

Frequency Range . . . . . 300 to 7000 Hz
Planning Range . . . . . 4 km (2.5 mi)
Power Input . . . . . 22 to 30V DC
Power Source . . . . . Vehicle power
Type of Service 30K0F3E

C-6709/G
Control, Radio Set

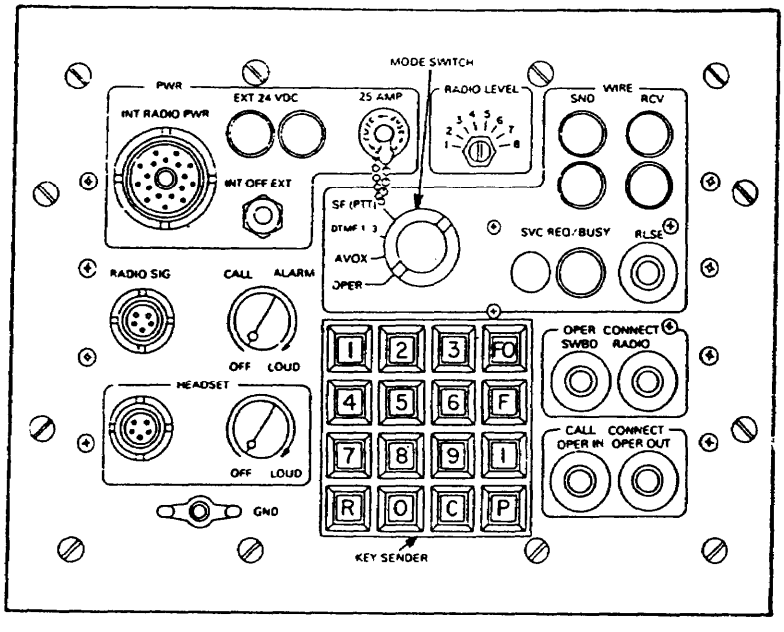

KY-90
Secure Digital Net Radio Interface Unit

NSN: 5895-01-166-3931

Reference: TB 11-5820 -890-10-7

General Information

The secure digital net radio interface unit (SDNRIU) will permit calls between single-channel radios and telephone subscribers using either existing or programmed equipment. The SDNRIU is a replacement for the AN/GSA-7 presently used as an NRI unit.

Technical Characteristics

Components	Half-duplex to full-duplex converters signaling equipment with COMSEC
Weight	40 lb (18 kg)
Mounting	Shelter and Vehicle

KY-90
Secure Digital Net Radio Interface Unit

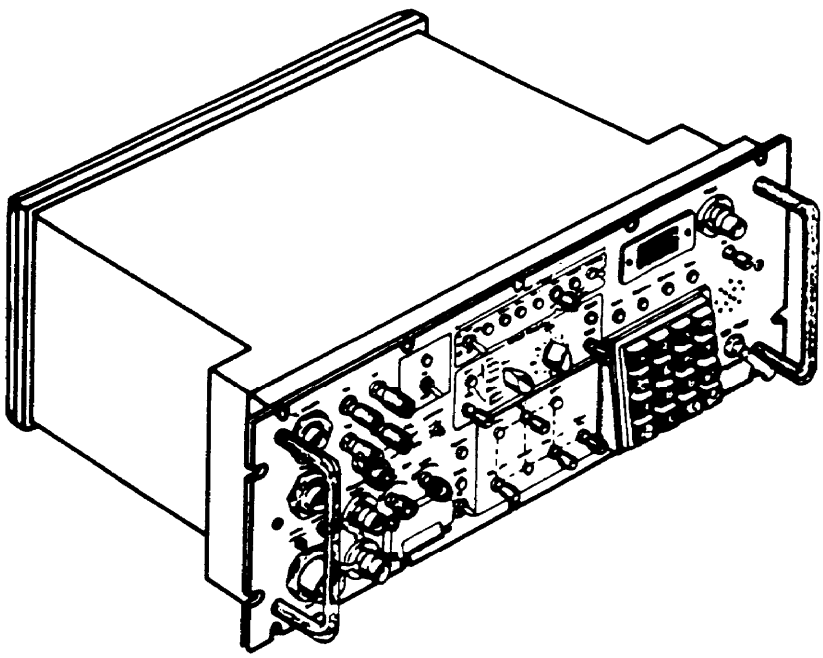

OE-254()/GRC
Antenna Group

NSN: 5985-01-063-1574

Reference: TM 11-5985-357-13

General Information

The OE-254 is a general purpose, stationary, broadband, omnidirectional antenna used to extend the range of tactical FM radio sets. Under normal field conditions, the antenna will be mast mounted. Once installed, the OE-254 does not have to be taken down for adjustment when a new frequency band is assigned to the radio net.

Technical Characteristics

Frequency Range . . . . . 30 to 88MHz
Planning Range . . . . . 57.9 km (36 mi), average terrain;
48.3 km (30 mi), difficult terrain
RF Power Capability . . . . . 35 W nominal
Antenna Erection Time (one person . . . . . 15 minutes
Height Erected . . . . . 12.8 m (42 ft)
Input Impedance to Radio . . . . . 50 ohms
Weight . . . . . 20.4 kg (45 lb)

OE-254( )/GRC
Antenna Group

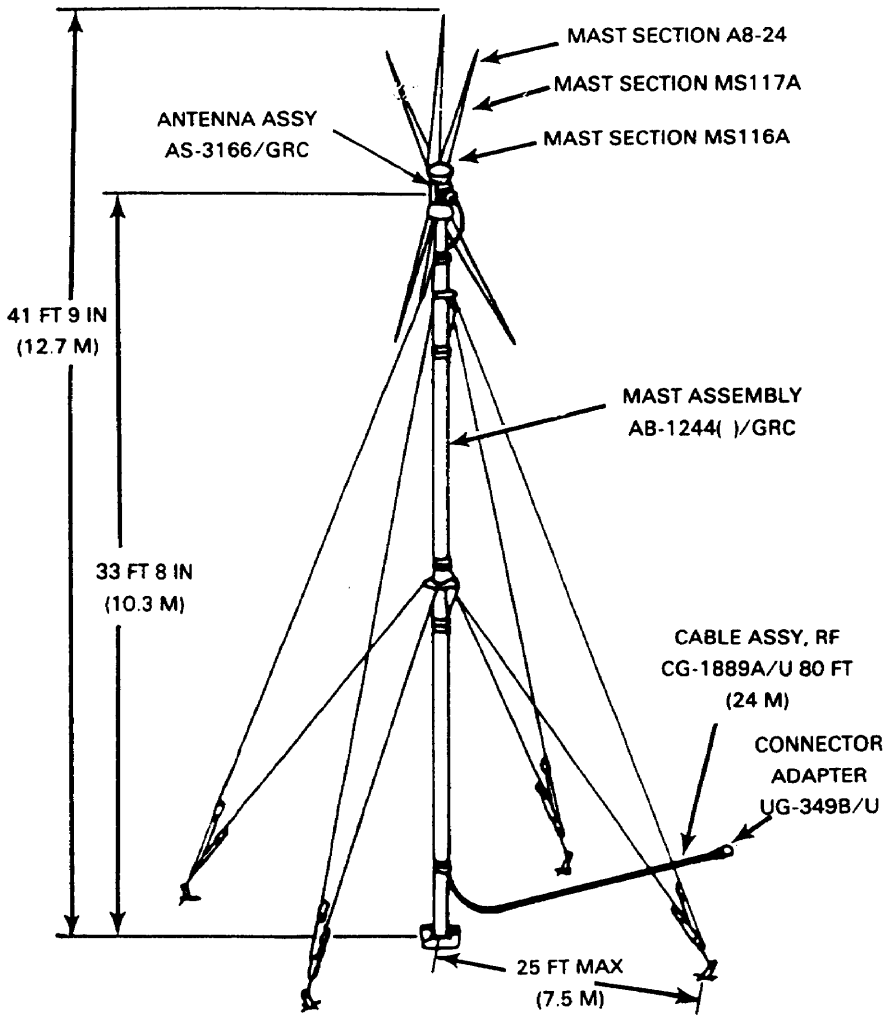

OE-303
Half-Rhombic Very High Frequency Antenna

NSN: 5985-01-152-5845

Reference: TM 11-5985-370-12

General Information

The OE-303 is a high gain, lightweight, directional antenna that can operate over the frequency range of 30 to 88 MHz without having to be physically tuned by the operator. The antenna and all the ancillary equipment (guys, stakes, tools, mast sections, compass) are contained in two carrying bags for manpack or vehicular transportation. The antenna is oriented in the direction of desired transmission by using a compass and the appropriate map sheet as required. The Mast Assembly AB-1244 is the primary antenna support structure used with the Half-Rhombic VHF Antenna OE-303. Connections to the antenna and radio sets are made with connectors and cables provided with the antenna.

Technical Characteristics

Frequency Range . . . . . 30 to 88 MHz
Antenna Erection Time (two people) . . . . . 20 minutes
Height Erected . . . . . 9.1 m (30ft)
Weight . . . . . 20.4 kg (45 lb)

OE-303
Half-Rhombic Very High Frequency Antenna

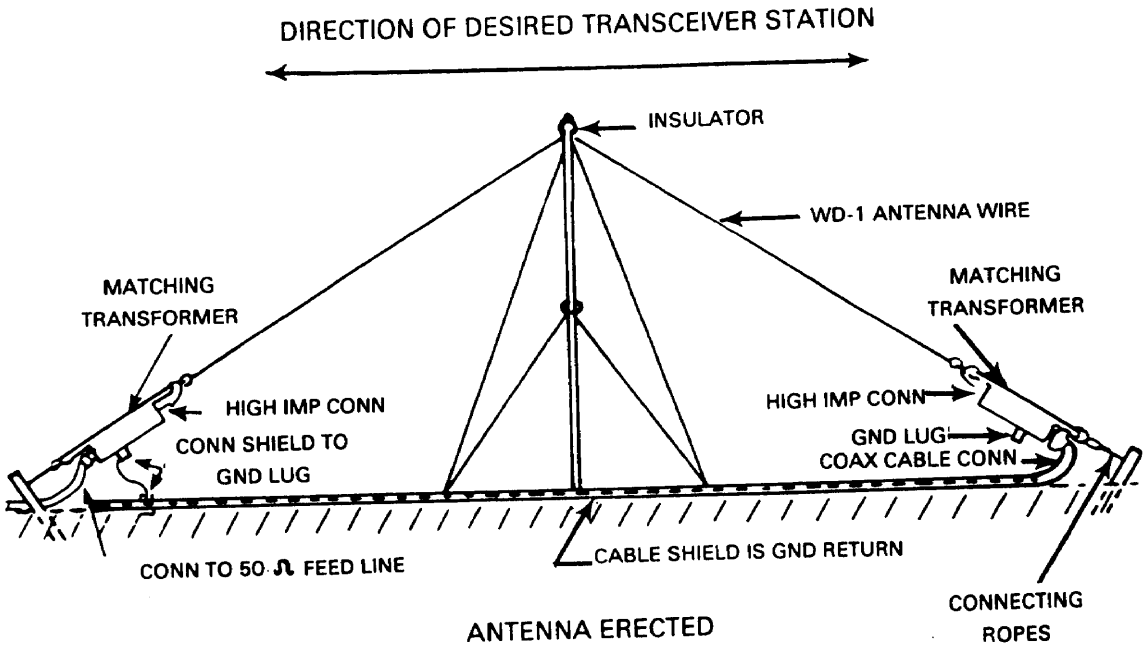

NOTE: MATCHING TRANSFORMER CASE ACTS AS INSULATOR.

RC-292
Antenna Equipment

NSN: 5985-00-497-8554

Reference: TM 11-5820-348-15

General Information

The RC-292 is a general purpose, stationary, ground-plane antenna used to increase the transmission/reception range of tactical FM radio sets. The radiating and ground plane elements must be adjusted to the proper length for a particular operating frequency.

Technical Characteristics

Frequency Range	20 to 76 MHz
Planning Range	Approximately twice the planning range of a radio set using a quarter-wave whip antenna
Height Erected	11.28 to 12.56 m (37 to 41.2 ft)
Weight	Approximately 19.5 kg (43 lb)

RC-292
Antenna Equipment

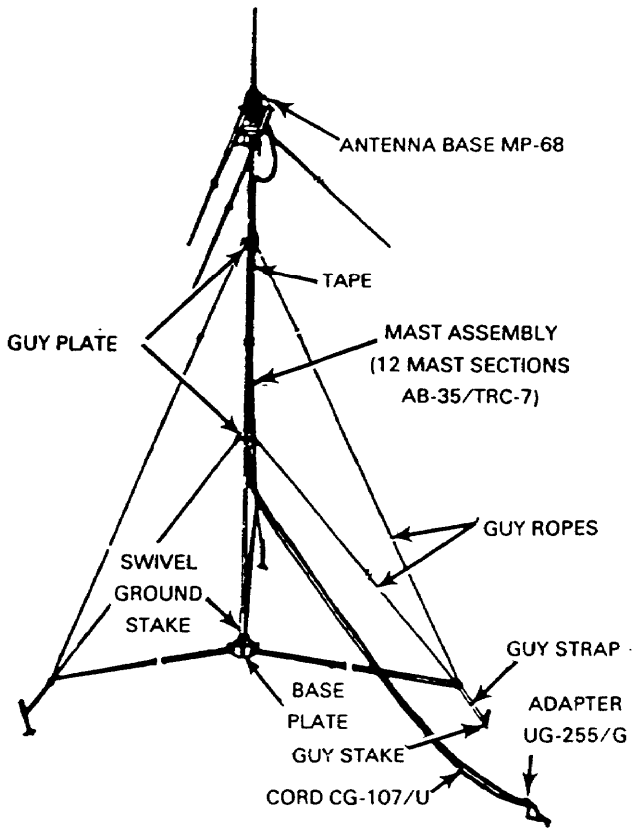

EQUIPMENT CONFIGURATIONS ANTENNA RC-292										
Operating Frequency (MHz)	Antenna Sections Required	Type of Antenna Sections Used				Ground Plane Sections Required	Type of Ground Plane Sections			
		AB-21/GR	AB-22/GR	AB-23/GR	AB-24/GR		AB-21/GR	AB-22/GR	AB-23/GR	AB-24/GR
20-27.9	6	3	1	1	1	18	3	1	1	1
27.9-38.9	4	1	1	1	1	15	2	1	1	1
38.9-54.4	3	0	1	1	1	12	1	1	1	1
54.4-75.95	2	0	1	0	1	9	0	1	1	1

Chapter 5 Multichannel Radio Equipment

	Page
AN/GRC-103(V) Radio set	5-2
AN/GRC-143 Radio Set	5-4
AN/GRC-144 Radio Set	5-6
AN/GRC-163 Radio Terminal Set	5-8
AN/GRC-222 Radio Set	5-10

AN/GRC-103(V)
Radio Set

NSN: 5820-00-935-4931 (AN/GRC-103(V)l)
5820-00-116-6029 (AN/GRC-103(V)2)
5820-00-116-6030 (AN/GRC-103(V)3)
5820-01-081-8866 (AN/GRC-103(V)4)

Reference: TM 11-5820-540-12

General Information

The AN/GRC-103(V) is a compact, transportable UHF-FM radio set which provides facilities for multichannel transmission and reception of PCM signals. It will accommodate up to 24 telephone channels when used with appropriate PCM multiplex equipment. The multichannel radio system can be secured by using electronic key generator TSEC/KG-27. In various configurations, the AN/GRC-103(V) can be employed as radio terminals or repeater stations. The difference between the models is the frequency range of bands I, II, III, and IV.

Technical Characteristics

Frequency Range . . . . . Band I, 220 to 404.5 MHz
Band II, 394.5 to 705 MHz
Band III, 695 to 1000 MHz
Band IV, 1350 to 1850 MHz

Frequency Separation:
Transmit to Receive . . . . . 16.5 MHz
Planning Range . . . . . 80 km (50mi)
Number of Channels . . . . . Band I, 369
Band II, 621
Band III, 610
Band IV, 1,000

Power Input . . . . . 115 V AC, 47 to 420 Hz
Power Output . . . . . 15 to 25 W
Antenna . . . . . Combination of Mast AB-952/GRC-103 and either the AS-1852/GRC-103, Band I; AS-1853/GRC-103, Band II; AS-1854/GRC-103, Band III; or AS-3047( )/GRC-103, Band IV
Tuning . . . . . Continuous
Type of service . . . . . 500KF9W (designed for use with multichannel PCM equipment only)
Weight . . . . . 212.5 kg (468 lb)

AN/GRC-103(V)
Radio Set

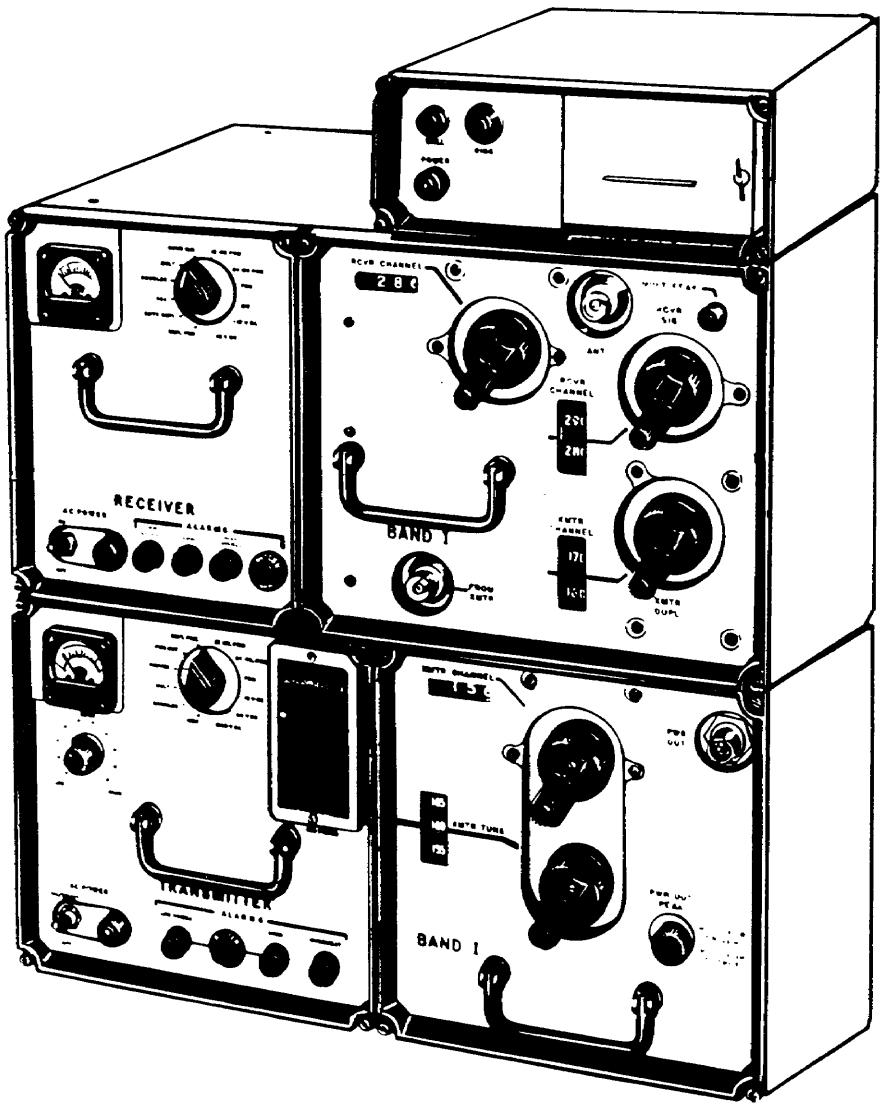

AN/GRC-143
Radio Set

NSN: 5820-00-926-7355

Reference: TM 11-5820-595-12

General Information

The AN/GRC-143 is a general purpose, FM tactical radio set which provides duplex operations. The radio set can be used for diffraction and tropospheric scatter modes of propagation at ranges to 161 km (100 mi), when used with a suitable antenna. The AN/GRC-143 is compatible with PCM multiplex equipment for 12 or 24 channel full-duplex operation.

Technical Characteristics

Frequency Range . . . . . 4400 to 5000 MHz
Power Output . . . . . 1 kw
Power Requirement . . . . . 115/230 V AC, 47 to 63 Hz, 5.37 kW
Planning Range . . . . . .161 km (100mi)
Antenna . . . . . AN/TRA-37 (not included)
Type of Service . . . . . 3200KF9W (PCM equipment only)
Weight . . . . . 326.4 kg (719 lb)

AN/GRC-143
Radio Set

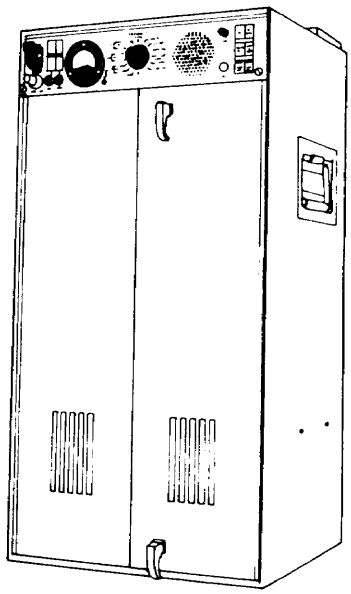

TRANSMITTER, RADIO
T-961/GRC-143

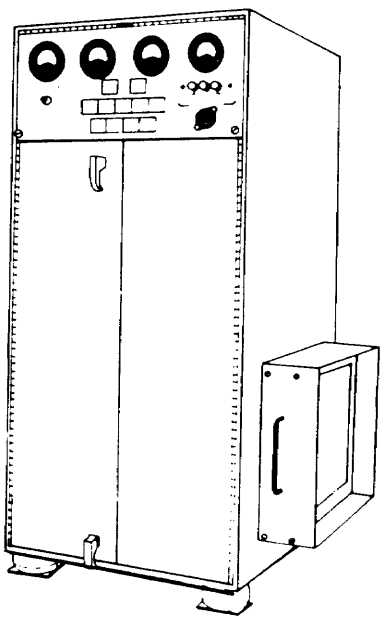

AMPLIFIER, RADIO FREQUENCY
AM-6090/GRC-143

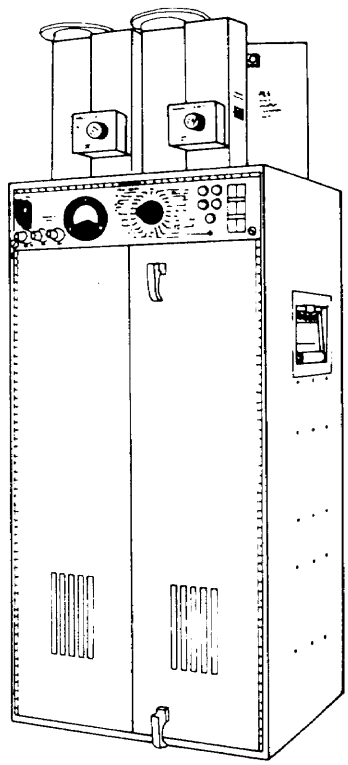

RECEIVER, RADIO
R-1287/GRC-143

AN/GRC-144
Radio Set

NSN 5820-00-926-7356

Reference: TM 11-5820-695-12

General Information

The AN/GRC-144 is a general purpose FM tactical radio set which provides duplex operations. The radio set is primarily intended for use in a multichannel LOS communications system where difficult terrain or other considerations prevent the use of cable. The radio set is compatible with standard PCM multiplex equipment. The AN/GRC-144 can be used as a radio terminal or as a radio repeater.

Technical Characteristics

Frequency Range . . . . . 4400 to 5000 MHz
Power Output . . . . . 25 W
Power Requirement . . . . . 120 V AC, 50 to 60Hz
Planning Range 80km (50mi)
Type of service . . . . . 3000KF9W (PCM equipment only)
Weight . . . . . .136kg (299 lb)

AN/GRC-144
Radio Set

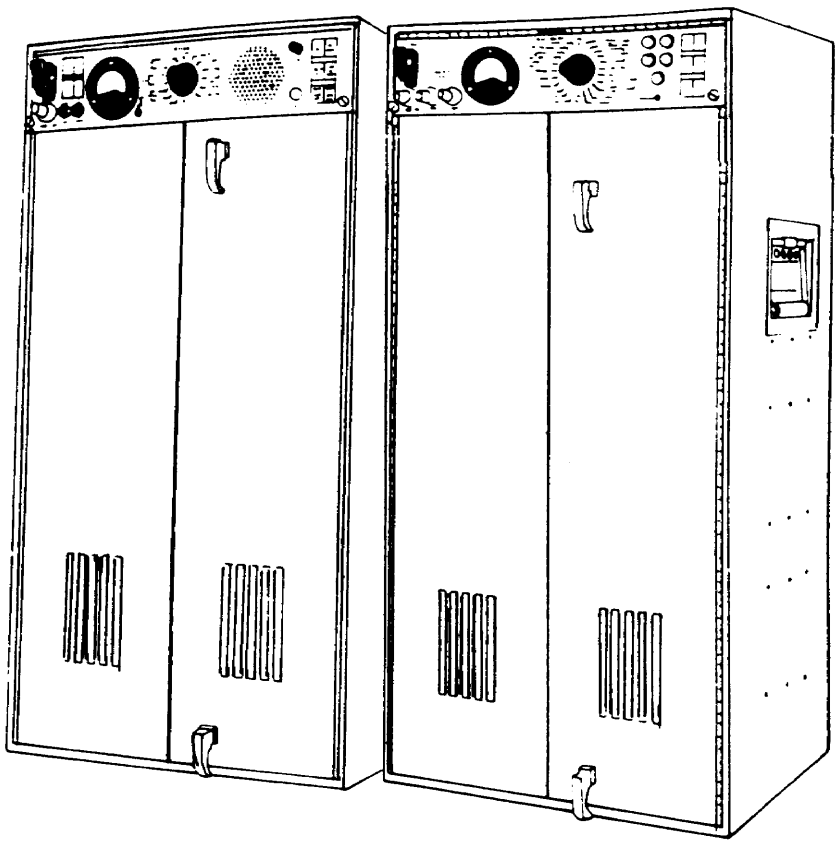

AN/GRC-163
Radio Terminal Set

NSN: 5820-00-832-5617

Reference: TM 11-5820-713-15

General Information

The AN/GRC-163 is a compact, transportable, multichannel VHF-FM radio terminal set used in point-to-point radio circuits. It can provide four voice and two teletypewriter channels plus an orderwire circuit. Four telephone ringers are built into the AN/TCC-70. Although the RT-524 can provide a secure single voice channel, current tactical bulk encryption devices are not compatible with the AN/TCC-70; therefore, this system cannot be operated in a secure mode.

Technical Characteristics

Frequency Range . . . . . .30,00 to 75.95 MHz
Frequency Separation . . . . . Transmit to receive vehicular whips, 10 MHz; fixed, with antennas 30.50 m (100 ft) apart, 3 MHz
Planning Range. . . . . 8 to 4l km (5 to 25.5mi)
Number of Channels 920
Power Input . . . . . .115 V AC, 50, 60, or 400 Hz or 230 V AC, 50 to 60Hz
Power Source . . . . . .15kW Generator Set, SF-15-MD
Power Output . . . . . Low, 3 W; High, 35W
Antenna . . . . . Log periodic AS-2169/G (two each) or 3.05 m (10 ft) Whip AS-1729 (two each)
Tuning . . . . . Detent
Squelch . . . . . 150 Hz tone and noise
Type of Service . . . . . 40 K0F9W (multichannel system)
Weight . . . . . 105.1 kg (231 lb)

AN/GRC-163
Radio Terminal Set

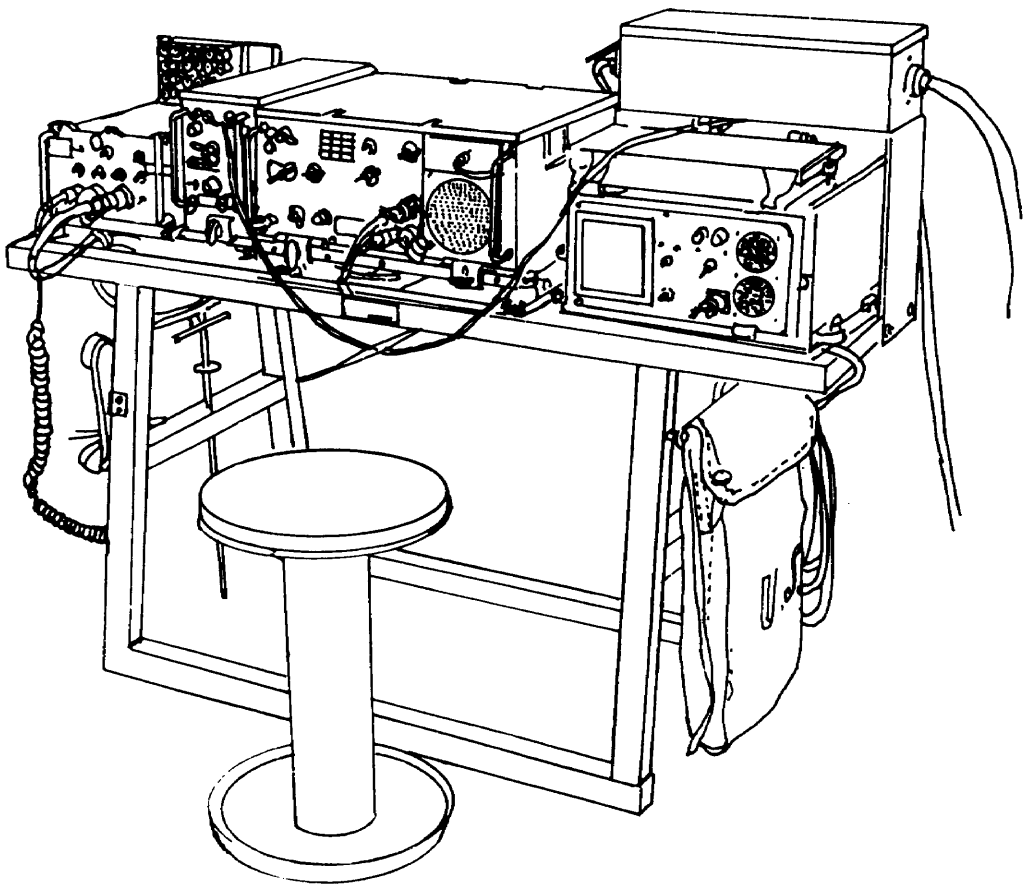

AN/GRC-222
Radio Set

NSN: 5820-01-260-9945

Reference: TM 11-5820-1028-12

General Information

The AN/GRC-222 is designed as a short range wideband digital radio. The transmitter and receiver are tunable in 100 kHz steps over the 4.4 to 5.0 GHz frequency range. The modular design of the radio set reduces the amount of time necessary to troubleshoot and return the radio set to full service. If a problem occurs in a module, the procedure is to replace that module with an identical spare module. The faulty module is then returned to the factory for repair. The power supply module provides the DC power required to operate the radio set.

Technical Characteristics

Frequency Range . . . . . 4.4 to 5.0 GHz
Power Input . . . . . 115/230 V AC G0 HZ
Power Output . . . . . + 15 V, +5 V, -5.2 V, and -20 V DC
Planning Range . . . . . 40 km (25mi) LOS mode
8 km (5 mi) SRWBR mode
Antenna . . . . . AS-1425/GRC and AB-1309 (V)/TRC)
Weight . . . . . 44.9 kg (99 lbs)

AN/GRC-222
Radio Set

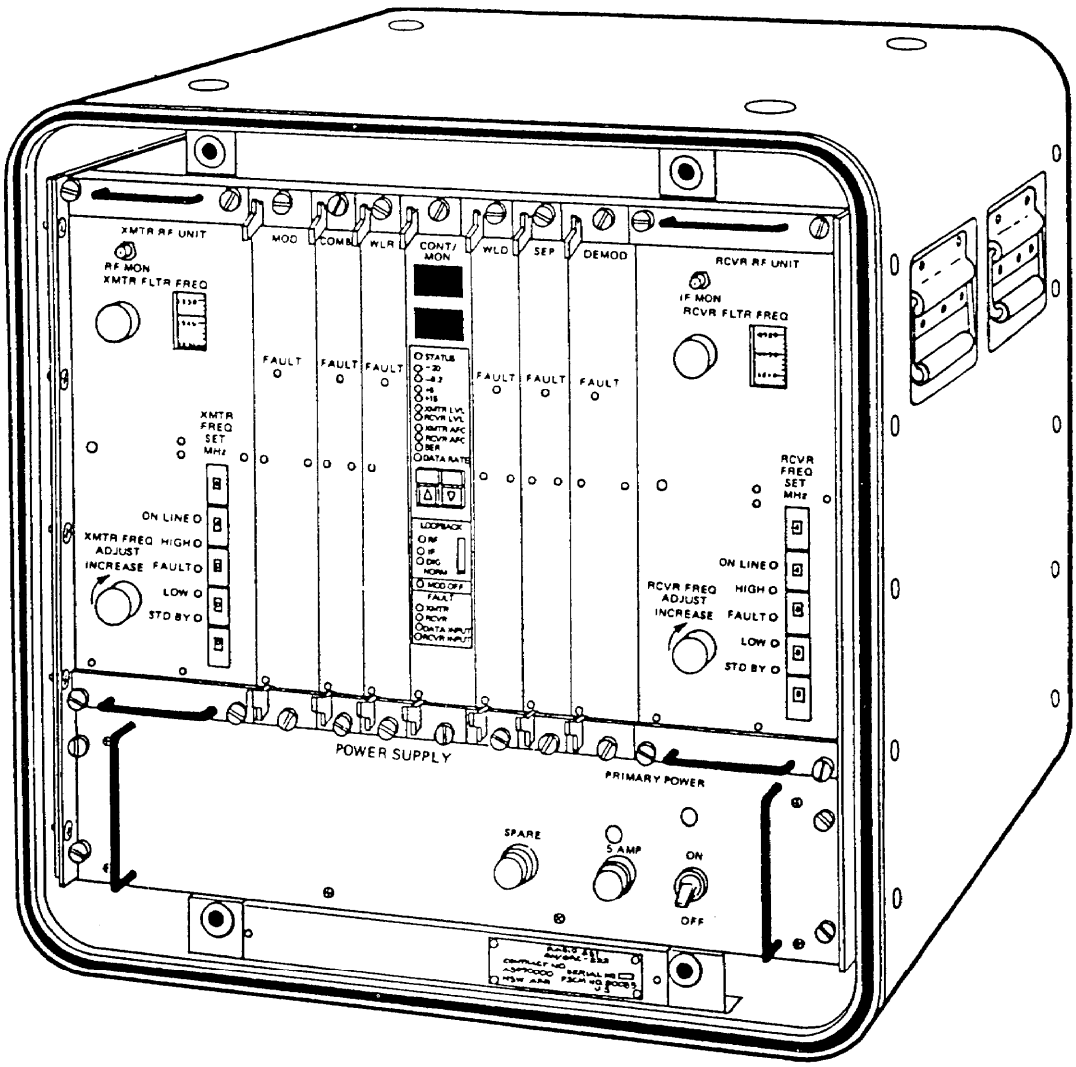

Chapter 6 Shelter Configurations

	Page
Section I. Switch	6-4
AN/TC-39A(V)1 Automatic Telephone Central Office	6-4
AN/T'TC-39D Automatic Telephone Central Office	6-7
AN/TTC-41( ) Automatic Telephone Central Office	6-10
AN/TYC-39(V) Automatic Message Switch	6-13
Section II. Teletypewriter	6-18
AN/MSC-29 and AN/MSC-29A Telegraph Terminal	6-18
AN/TSC-58 and AN/TSC-58A Telegraph Terminal	6-21
Section III. Multichannel	6-23
ANTCC-60 and AN/TCC-69 Telephone Terminals	6-23
AN/TCC-65 Telephone Terminal	6-26
AN/TCC-72 Telephone Terminal	6-28
AN/TCC-73(V)1, AN/TCC-73(V)2, AN/TCC-73A(V)1 and AN/TCC-73A(V)2 Telephone Terminals	6-30
AN/TRC-113(V)1 Radio Repeater Set	6-33
AN/TRC-121 Radio Terminal Set	6-35
AN/TRC-138 Radio Repeater Set	6-37
AN/TRC-138A Radio Repeater Set	6-39
AN/TRC-145(V) Radio Terminal Set	6-43
AN/TRC-151(V) Radio Terminal Set	6-46
AN/TRC-170(V) Radio Terminal Set	6-50
AN/TRC-173 Radio Terminal Set	6-53
AN/TRC-174 Radio Repeater	6-56
AN/TRC-175 Radio Terminal Set	6-59
Section IV. Auxiliary Equipment	6-62
AB-1309(V)/TRC Mast	6-62
Section V. Multichannel Satellite Communications Terminals	6-64
General Information	6-64
Defense Satellite Communications System Program	6-65
AN/FSC-9 Satellite Communications Terminal	6-69

	Page
AN/FSC-78 and AN/GSC-39 Satellite Communications Terminals	6-71
AN/GSC-40(V) and AN/MSC-64(V) Special Communications Systems	6-73
AN/GSC-49 Jam-Resistant Satellite Communications Terminal	6-78
AN/GSC-52 Medium Satellite Communications Terminal	6-80
AN/MSC-46 Satellite Communications Terminal	6-82
AN/MSQ-114 Satellite Communications Control	6-84
AN/TSC-54 Satellite Communications Terminal	6-86
AN/TSC-85A, AN/TSC-85B(V)1 and AN/TSC-85B(V)2 Satellite Communications Terminals	6-88
AN/TSC-86 Satellite Communications Terminal	6-93
AN/TSC-93A and AN/TSC-93B Satellite Communications Terminals	6-95
MILSTAR Ground Command Post	6-103
MILSTAR SMART-T	6-105
STAR-T	6-107
Section VI. Single-Channel Tactical Satellite Communications Radios	6-109
AN/CSZ-1A Sunburst II Processor	6-109
AN/PSC-3 and AN/VSC-7 Tactical Satellite Communications Radio Sets	6-111
HST-4A Satellite Communications or Line-of-Sight Radio	6-115
LST-5B and LST-5C Lightweight Satellite/Line-of-Sight Terminal	6-117
AN/PSC-7 Lightweight Satellite Transceiver	6-119
AN/PSC-5 Enhanced Manpack Ultra High Frequency Terminal	6-121
TSQ-190(V) Special Purpose Integrated Remote Intelligence Terminal (SPIRIT II)	6-123
MILSTAR SCAMP	6-125
AN/PSN-11 Precision Lightweight Global Positioning System Receiver	6-127
Section VII High Frequency Radio	6-129
AN/GRC-122, AN/GRC-142, AN/VSC-Z, and AN/VSC-3 Radio Teletypewriter Sets	6-129
Section VIII. Communications Centers and Operations Centers	6-135
AN/GSQ-80, AN/GSQ-80A, and AN/GSQ-80B Message Centers	6-135
AN/MSC-25 Communications Operations Center	6-137
AN/MSC-31 and AN/MSC-31A Communications Operations Center	6-139
AN/MSC-32 and AN/MSC-32A Operations Centers	6-141
AN/TYQ-30(V) and AN/TYQ-31 Communications System Control Elements	6-143

	Page
Section IX. Patch	6-148
AN/TSC-76 Communications Patching Center	6-148
AN/TSQ-84 Communications Technical Control Center	6-150
SB-675/MSC and SB-675A/MSC Communications Patching Panels	6-154

Section I. Switch

AN/TTC-39A(V)1
Automatic Telephone Central Office

NSN: 5805-01-241-9710

Reference: TM 11-5805-747-12-1

General Information

The AN/TTC-39A(V) is modular/transportable switching communications and nodal control equipment that provides secure automatic switching and technical control for both digital and analog communications. It is a hybrid circuit switch, with a 744-line capacity (96 analog and 648 digital). The facility provides technical control functions including channel reassignment and multiplexing, line testing, engineering orderwire, atomic timing standard, and analysis or trouble reports, alarms, and system data. It signals and supervises analog and digital trunks and lines. This includes 20 Hz/1600 Hz ringdown, DC closure, dial pulse, DTMF, and 6-wire E&M using tone burst, confirmation, non-confirmation, common channel, and digital in-band-trunk signaling (DIBITS).

Major Components

1 Switching Module Assembly S-280B/G (Modified)
1 Master Power Distribution Unit ON-224/T
2 PU/406 Electric Power Units (30 kW) AN/MJQ-10A
1 Storage Shelter S-640
1 Maintenance Shelter S-639

Technical Characteristics

Total External Lines	744
Digital Matrix	648
Analog Matrix	96
Maximum local Loops/Trunks (within this total)	240
Digital Local Loops	144
Analog local Loops/Trunks	96
Maximum Analog Loops via Digital Transmission Group (DTGs)	60
Switch Rate	16/32 kb/s
Total DTGs	30

Technical Characteristics (cont.)

Maximum Channels Per DTG 144
In-Band Digital Trunks (Loops) 200
Call Rate ..... 7,500 (calls per busy hour)
Analog Bandwidth ..... 108 kHz
Numbering Plan ..... TRI-TAC NATO, 13digits
military tactical, 7 digits
Automatic Voice Network (AUTOVON), 10 digits
Power ..... 120/208 V AC 50, 60, 400 Hz, three-phase
Vehicle Requirements ..... One 5-ton truck(TTC-39A)
two 2 l/2-ton trucks (S-640) (S-639)

AN/TTC-39A(V)1
Automatic Telephone Central Office

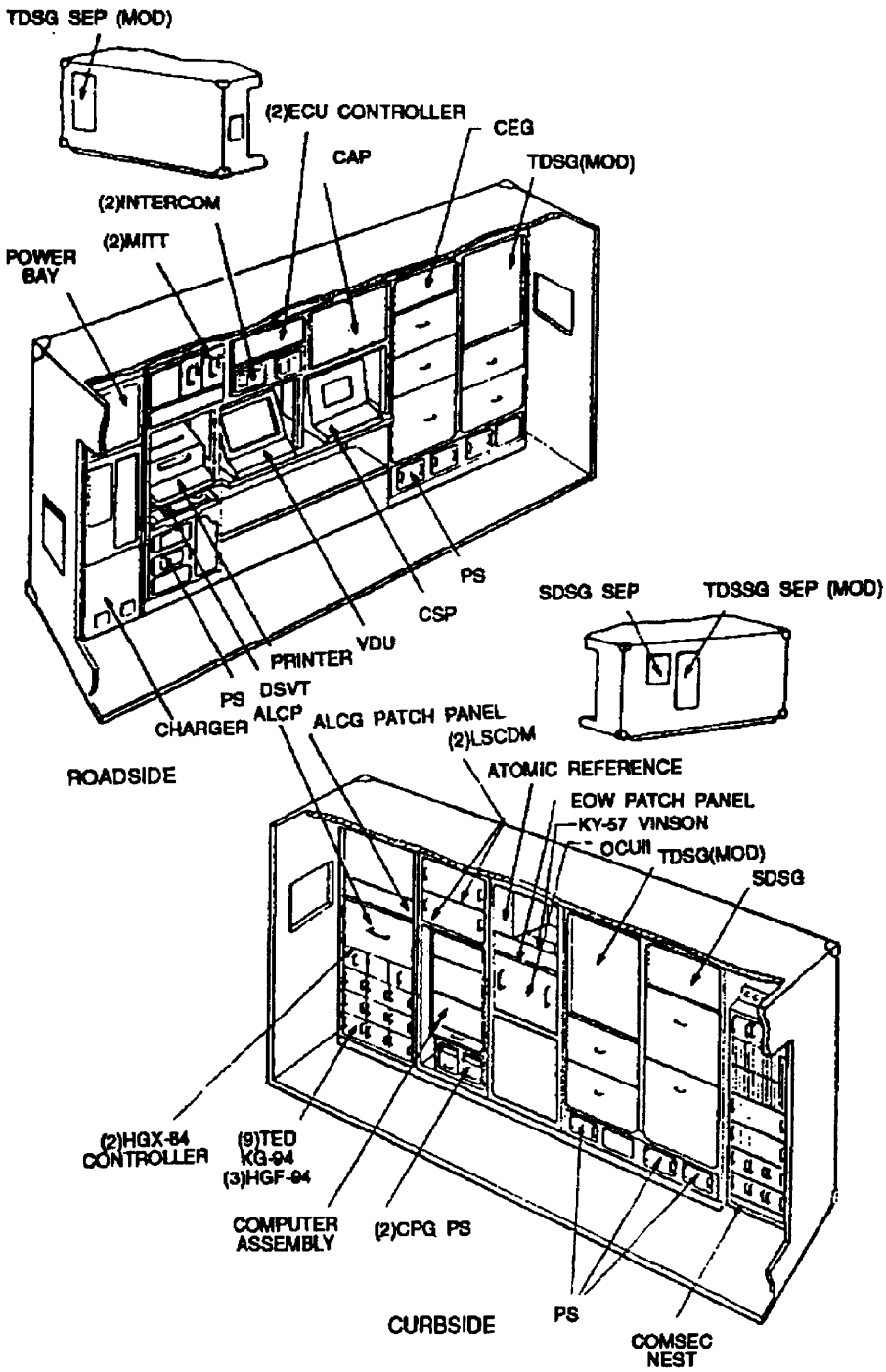

AN/TTC-39D
Automatic Telephone Central Office

NSN: 5805-01-315-3751

Reference: TM 11-5805-778-12-1

General Information

The AN/TTC-39D is a modular and transportable nodal control mobile subscriber access circuit switch designed to provide secure and nonsecure automatic switching and technical control for analog, digital, and mobile subscriber traffic for the US Army. The AN/TTC-39D is a product improvement of the AN/TTC-39A. The AN/TTC-39D is an all digital circuit switch with the capacity to terminate 712 lines (both analog and digital). The AN/TTC-39D also has flood search capability and is totally compatible/interchangeable with fielded MSE. The facility retains minimum essential technical control functions including channel reassignment, multiplexing, line testing, and engineering orderwire. The facility also retains minimum essential technical control functions for atomic timing standards, analysis of trouble reports, alarms, and system data.

Major Components

1 Switching Module Assembly S-280B/G (Modified)
2 PU/406 Electric Power Plants AN/MJQ-10 (30 kW)
1 Storage Shelter S-640
1 Master Power Distribution Unit ON-224/T
1 Maintenance Shelter S-639
1 Master Power Distribution

Technical Characteristics

Total External Terminations	712
Digital Switch Matrix	2
DTG Total (648 channels)	30
Group Modem (GPMDM) (41/2-144 channels)	28
Digital NATO Group Modem (DNGPM) (16 channels)	2 (DTG 15, 30)
Single-Channel Digital (N1)	240 (max)
Analog (N2)	240 (max)
Total	N1 + N2 = 240

Technical Characteristics (Cont.)

Analog on TDMX	240
TED	15
Loop Key Generator (LKG)	32
Switch Rate	16 kb/s
Total DTGs	30
Maximum Channels Per DTG.	144
In-Band Digital Trunks (Long Loops)	200
Numbering Plan	TRI-TAC NATO, 13 digits; military tactical, 7 digits; AUTOVON, 10 digits; Standardization Agreement (STANAG) NATO Deducible Numbering Plan
Power	115/208 V AC 50, 60, 400 Hz, three phase
Vehicle Requirements	One 5-ton (AN/TTC-39D); Two 2 1/2-ton trucks (S-640) (S-639)

AN/TTC-39D
Automatic Telephone Central Office

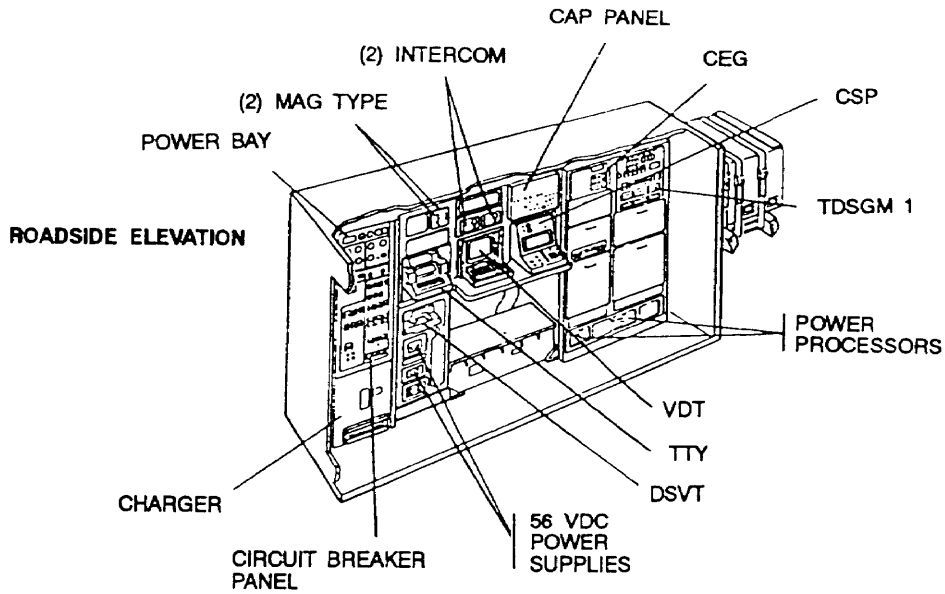

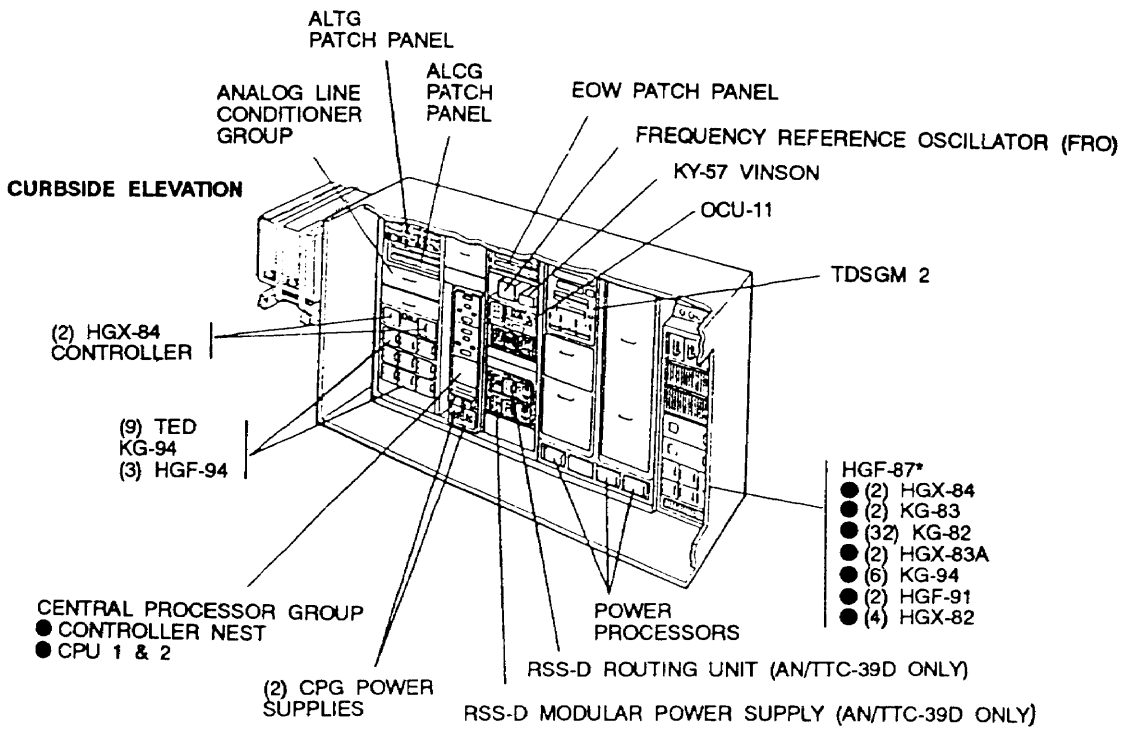

*= HGF-87 COSMEC rack is in 39D circuit switch

AN/TTC-41()
Automatic Telephone Central Office

NSN: 5805-01-028-8393 (AN/TTC-41(V)1)
5805-01-028-8394 (AN/TTC-41(V)2)
5805-01-028-8392 (AN/TTC-41(V)3)
5805-01-044-8869 (AN/TTC-41(V)4)
5805-01-044-8870 (AN/TTC-41(V)5)
5805-01-045-3157 (AN/TTC-41(V)6)
5805-01-044-8871 (AN/TTC-41(V)7)

Reference: TM 11-5805-693-12 (V1-V4) and 12-1 (V5-V7)

General Information

The AN/TTC-41( ) is an air- or vehicular-transportable assemblage used to provide rapid automatic switching to tactical units in an area type communications system. The AN/TTC-41( ) provides cordless service to two-wire common-battery signaling lines, 20-Hz ringdown lines or trunks, common-battery dial pulse or DTMF lines, and four-wire tone signaling trunks. The AN/TTC-41(V)l provides 30 lines of service in a shelter configuration. The AN/TTC-41(V)2 and AN/TTC-41(V)5 provide 60 lines of service. The AN/TTC-41(V)3 and AN/TTC-41(V)6 provide 90 lines of service. The AN/TTC-41(V)4 and AN/TTC-41(V)7 provide 120 lines of service in a shelter configuration. The (V)1 through (V)4 models are shelter configurations and (V)5 through (V)7 are trailer configurations.

Major Components

1 Shelter S-561 TTC-41( ) (Modified Shelter S-250/G) (V)1-(V)4 models)
1 Push Button Telephone Set TA-938/G (all models)
1 through 5 Switchboards SB-3614(V)/TT or SB-3614A(V)/TT and Headset H-182/PT (depending on the model)
1 Headset Switch Box (all models)
1 Trailer Assembly V-498/TTC-41(V), (Modified Trailer M-569) (V)5-(V)7 models)
1 Intercommunications Station LS-147F/FI (all models)
1 or 2 Power Supplies PP-6224/U (depending on the model)

Technical Characteristics

Power Requirement ..... 115 V AC, 60 Hz, single phase
Power Consumption:
(V)1 ..... 5.1 kW
(V)2 ..... 5.2 kW
(V)3 ..... 5.3 kW
(V)4 ..... 6.5 kW
(V)5 ..... 2.1 kW
(V)6 ..... 2.2 kW
(V)7 ..... 3.5 kW
Vehicular Requirement ..... One 1/4 truck, 1/4-ton truck, and 3/4-ton truck
Weight:
(V)1 ..... 1,031 kg (2,270 lb)
(V)2 ..... 1,058 kg (2,330 lb)
(V) 3 ..... 1,090kg (2,400 lb)
(V)4 ..... 1,167 kg (2,570 lb)
(V)5 ..... 945 kg (2080 lb)
(V)6 ..... 963 kg (2,120 lb)
(V)7 ..... 1,050 kg (2,310 lb)

AN/TTC-41( )
Automatic Telephone Central Office

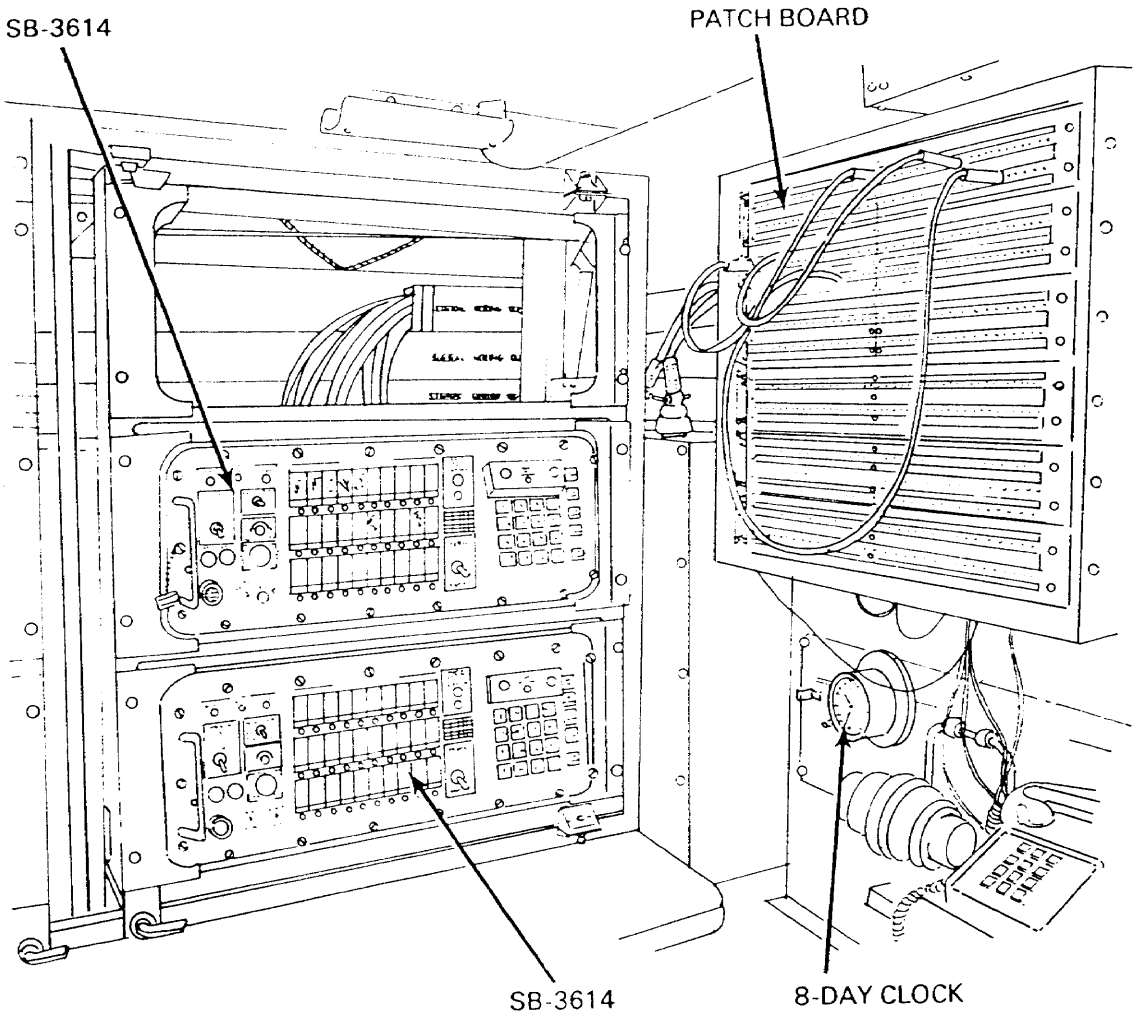

AN/TYC-39(V)
Automatic Message Switch

NSN: 5805-01-123-1851

Reference: TM 11-5805-683-12-1

General Information

The AN/TYC-39(V) switch provides secure, automatic message switching of narrative record and data traffic at major corps and theater Army nodes in conjunction with multichannel LOS and demand assign multiple access (DAMA). The switch also includes tactical satellite communications (TACSATCOM), and tropospheric scatter communications media. This sheltered, tactically mobile equipment will be collocated with the AN/TTC-39 to provide circuit switching on data traffic as required. The difference between the models is in their cryptographic equipment. The (V)3 uses only integral TRI-TAC COMSEC equipment. The other models can operate with TRI-TAC or inventory COMSEC equipment. The (V)3 is not in general field use because of the tactical need to interoperate with available terminal equipment. The 400 Hz design of the (V)4 fits it for use in aircraft or at US Air Force installations. The 50-line switch consists of two shelters: the communications interface shelter (CIS) and the message processing shelter (MPS). The 25-line switch has both elements in a single shelter.

Technical Characteristics

The AN/TYC-39(V) automatically accepts, processes, stores, delivers, and accounts for narrative and data traffic through 50 lines, in ACP 127 and ACP 127 modified or JANAP 128 and JANAP 128 modified format only. Capabilities include processing multiple and collective addressed messages; mode, code, speed, and format conversions; handling six levels of precedence; message retrieval for retransmission; and message accountability and service functions. The AN/TYC-39(V) provides COMSEC for trunking and subscribers. Its interfaces include currently fielded record traffic terminals, modular record traffic terminals (MRTTs), modular tactical communications centers (MTCCs), unit level message switches (ULMSs), Automatic Telephone Central Offices AN/TTC-39, and DCS AUTODIN I. The AN/TTC-39(V) can interface with data adapters and the communications nodal control element (CNCE).

Technical Characteristics (cont.)

Power Requirement . . . . . 115/208 V AC, 3-phase, 50/60 Hz (400 Hz (V)4 only)
Weight:
CIS . . . . 3,086 kg (6,799 lb)
MP S . . . . 3,172 kg (6,986 lb)
Vehicle Requirements:
CIS, MPS, OX-54 . . . . . Three 5-ton trucks
Storage and Maintenance Shelter . . . . . Two 2 1/2-tontrucks

AN/TYC-39(V)
Automatic Message Switch

(Message Processing Shelter)

Roadside

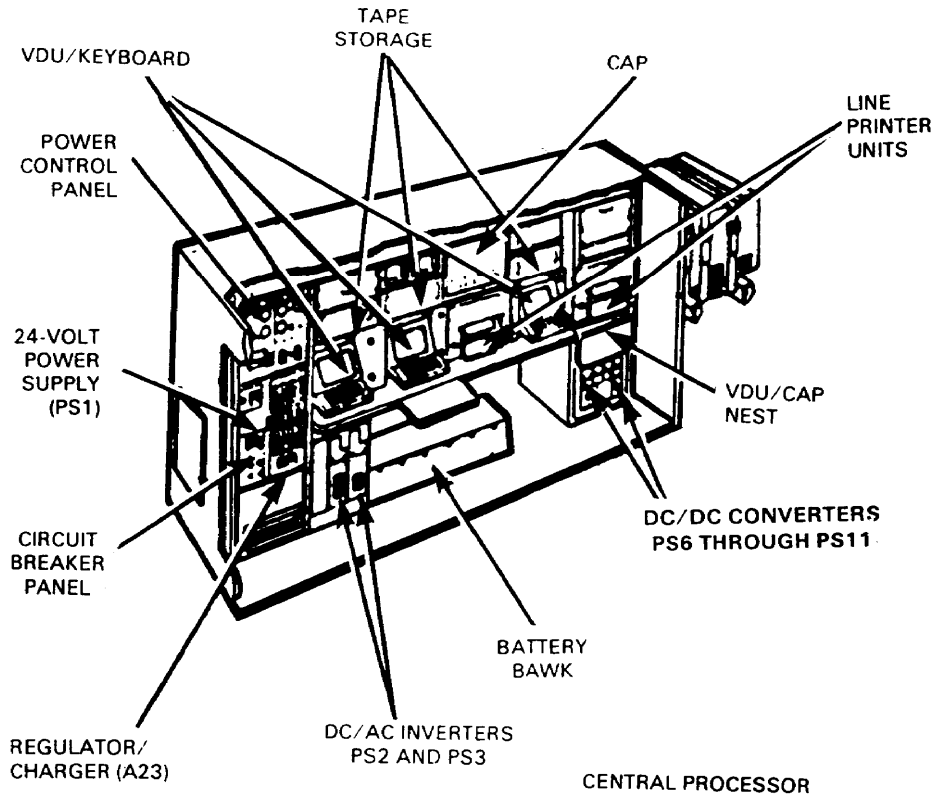

Curbside

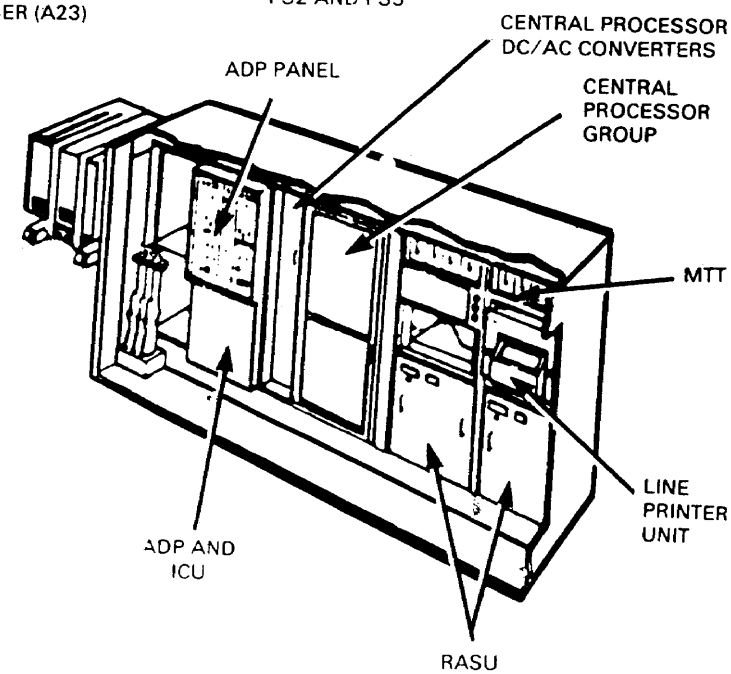

AN/TYC-39(V) Automatic Message Switch (Communications Interface Shelter)

Roadside

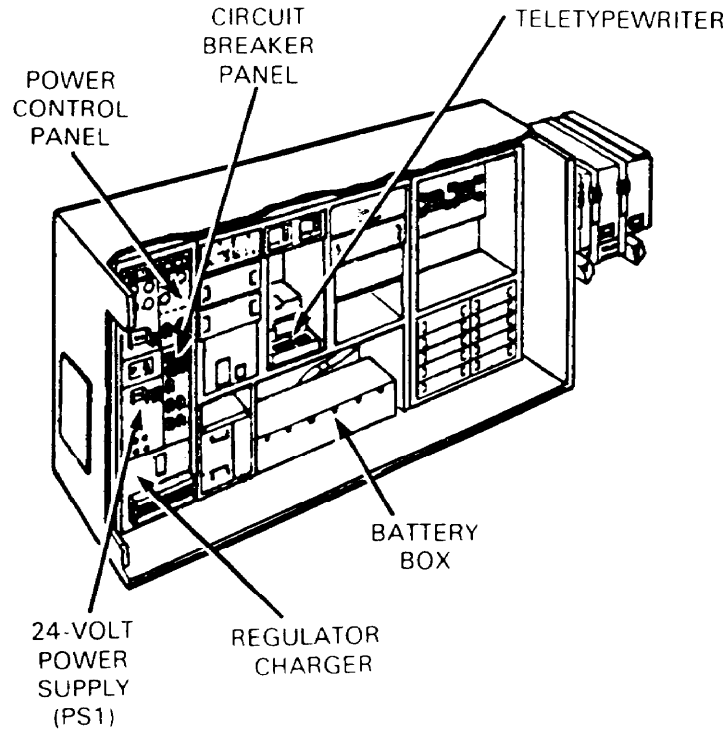

Curbside

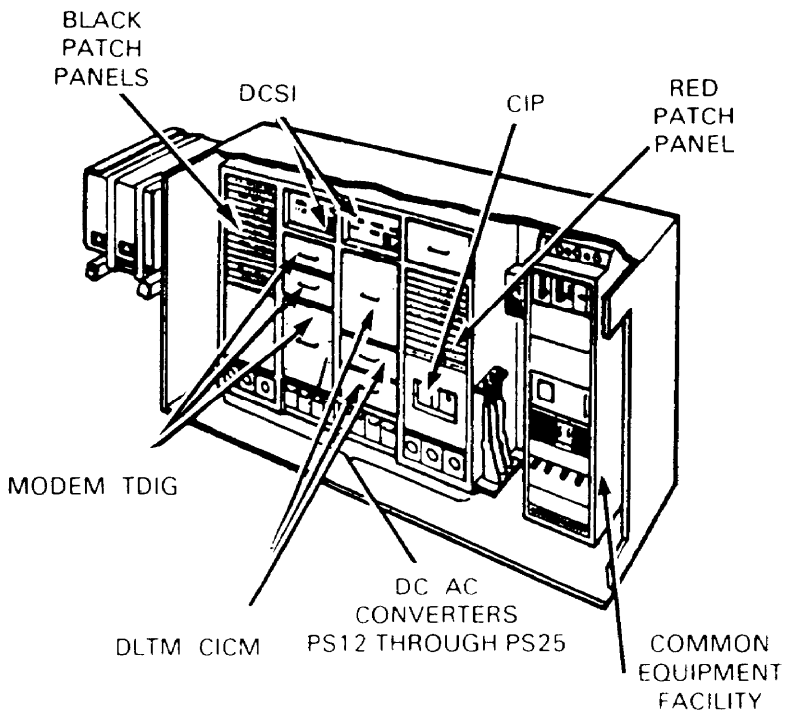

AN/TYC-39(V) Automatic Message Switch (25-Line Single Shelter)

Roadside

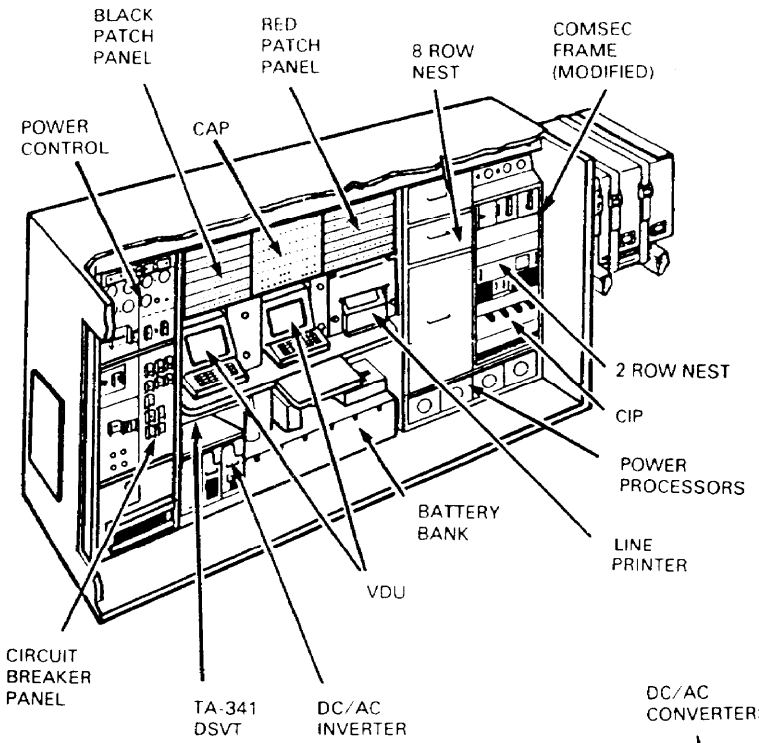

Curbside

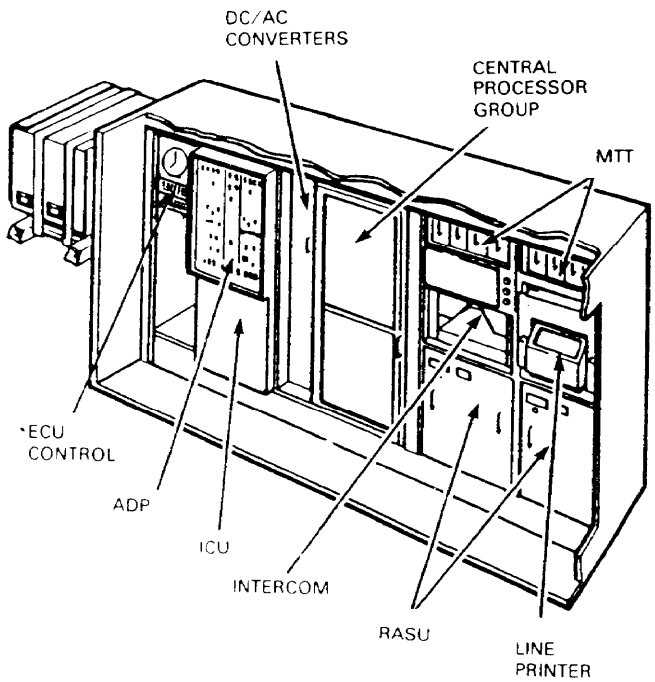

Section II. Teletypewriter

AN/MSC-29 and AN/MSC-29A Telegraph Terminal

NSN: 5805-00-943-6762 (AN/MSC-29)
5805-01-095-6233 (AN/MSC-29A)

Reference: TM 11-5805-312-14

General Information

The AN/MSC-29 and the AN/MSC-29A function as a terminal for two full-duplex or four half-duplex secure teletypewriter circuits. The terminal set also provides 16 lines for switching teletypewriter transmissions from other components in an area type communications system or from local subscribers. Four of the 16 lines are equipped with telegraph-telephone signal converters and filter assemblies for speech-plus, half-duplex operation. Teletypewriter traffic is secured using the TSEC/KW-7. The AN/MSC-29 and AN/MSC-29A are used at division and corps. This item is being replaced by the AN/TSC-58.

Major Components

	AN/MSC-29	AN/MSC-29A
Telegraph-Telephone Signal Converter:		
TA-182/U	8	
CV-425/U		8
Filter Assembly:		
F-98/U	4	
F-316/U		4
Reperforator-Transmitter TT-76B/GGC	8	8
Telephone Switchboard SB-22/PT	1	1
Telephone Set TA-312/PT	1	1
Teletypewriter TT-4/TG	4	
Communications Terminal AN/UGC-74A(V)3		4
Telegraph Terminal:		
TH-5/TG	12	
TH-22/TG		12

Major Components (Cont.)

	AN/MSC-29	AN/MSC-29A
COMSEC Equipment TSEC/KW-7 (not basic issue item)	6	6
Shelter S-176/MSC-29	1	1

Technical Characteristics

Power Requirement . . . . . 5 V AC, 50 to 60 Hz single phase
Power Consumption . . . . . 4,634 W
Weight . . . . . 2,451.6 kg (5,400 lb)
Vehicular Requirement . . . . . One 2 1/2-ton truck

AN/MSC-29 and AN/MSC-29A Telegraph Terminal

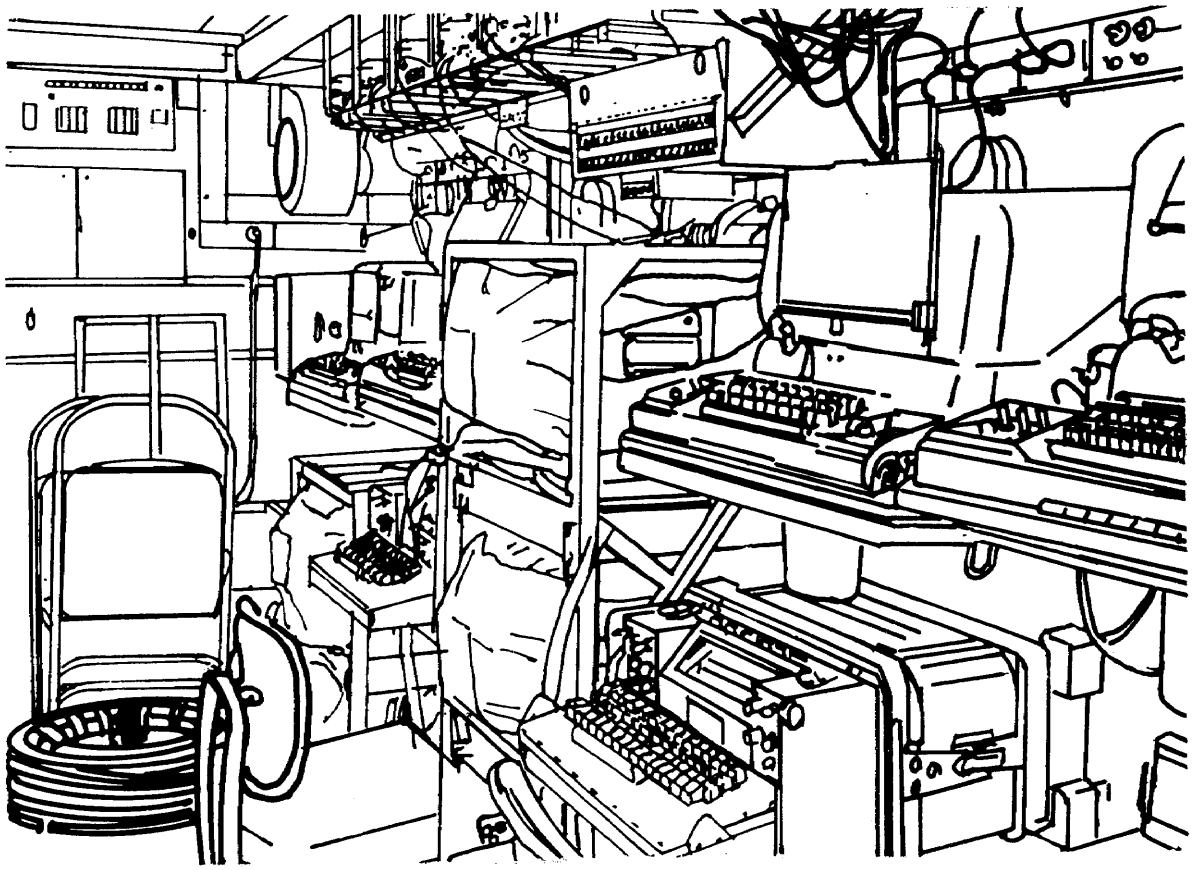

AN/TSC-58 and AN/TSC-58A Telegraph Terminal

NSN: 5805-00-010-5287

Reference: TM 11-5805-574-15

General Information

The AN/TSC-58 is an air- or vehicular-transportable assemblage that serves as a VF teletypewriter terminal. It contains facilities for three VF full-duplex or six VF half-duplex circuits in either the secure or nonsecure modes. Circuits are secured with the TSEC/KW-7. The AN/TSC-58 has an SB-22/PT which provides 12 lines for switching teletypewriter transmissions from other components in an area communications system or from local subscribers. It is used at corps and division. The difference between the two models is the AN/TSC-58 uses the Teletypewriter TT-98(x)/FG, and the AN/TSC-58A uses the Communications Terminal AN/UGC-74A(V)3.

Major Components

6 COMSEC Equipment TSEC/KW-7 (not a basic issue item)
6 Low Level Keying Devices TT-523
8 Telegraph Terminals TH-22/TG
1 Distribution Box J-1077A/U
1 Manual Switchboard SB-22/PT
1 Telephone Set TA-312/PT
2 Air Conditioners, 9,000 BTU
6 Reperforator-Transmitters TT-76B/GGC
1 Shelter S-348/TSC-58 (modified S-280/G)
6 Teletypewriters TT-98B/FG or Communications Terminal AN/UGC-74A(V)3
1 Intercommunications Station LS-147F/FI

Technical Characteristics

Power Requirement . . . . . 115 V AC, 50 to 60 Hz
Power Consumption 7,176W
Weight . . . . . 2,429 kg (5,350 lb)
Vehicular Requirement . . . . . One 2 1/2-ton truck

AN/TSC-58 and AN/TSC-58A Telegraph Terminal

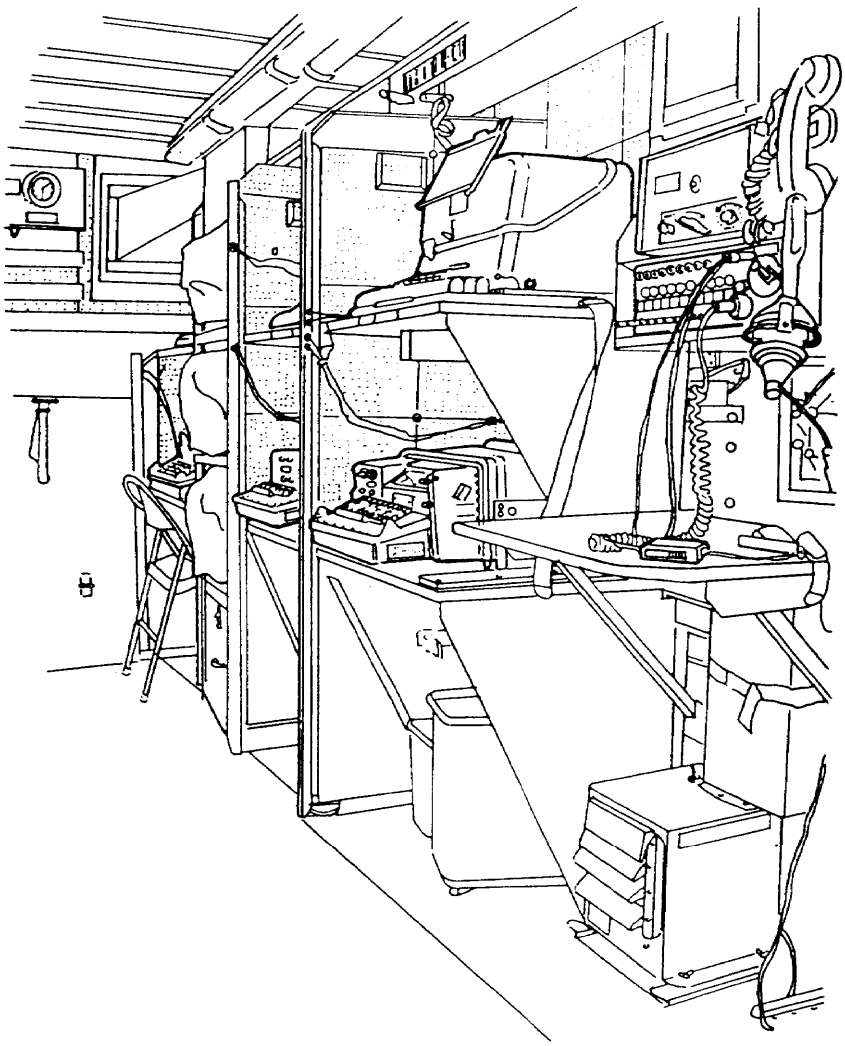

Section III. Multichannel

AN/TCC-60 and AN/TCC-69 Telephone Terminals

NSN: 5805-00-877-8740 (AN/TCC-60)
5805-00-089-6253 (AN/TCC-69)

Reference: TM 11-5805-358-14-2

General Information

The AN/TCC-60 and the AN/TCC-69 operate primarily as cable terminals or repeaters although they may be used with equipment such as Radio Repeater Set AN/TRC-110(V) for radio terminal applications. They are air- or vehicular-transportable assemblages. They provide nonsecure or secure multiplex cable terminal or repeater facilities for corps or above PCM communications systems.

Major Components

1 Shelter S-300/TCC-60 (modified AN/TCC-69, S-318/G)
1 Voltage Regulator CN-514/GRC
2 COMSEC Equipment TSEC/KG-27 (not a basic issue item)
2 Converters CV-1548/G
2 Multiplexer TD-204/U or TD-754/G
1 Intercommunications Station LS-147F/FI
2 Multiplexer TD-352/U

Configurations

Terminal Arrangements:

Two — 12-channel; secure or nonsecure terminals.
One — 24-channel; secure or nonsecure cable terminal facility with the two equipment sets combined.

Repeater Arrangements:

12-, 24-, 48-channel cable repeater transmission.

Technical Characteristics

Power Requirement	115 V AC, 50 to 60 Hz
Power Consumption:	
AN/TCC-60	2,700 W
AN/TCC-69	2,770 W
Weight:	
AN/TCC-60	613 kg (1,350lb)
AN/TCC-69	857 kg (1,887 lb)
Vehicular Requirement:	
AN/TCC-60	One 1 1/4-ton truck
AN/TCC-69	One 1 1/2-ton truck

AN/TCC-60 and AN/TCC-69 Telephone Terminals

Roadside

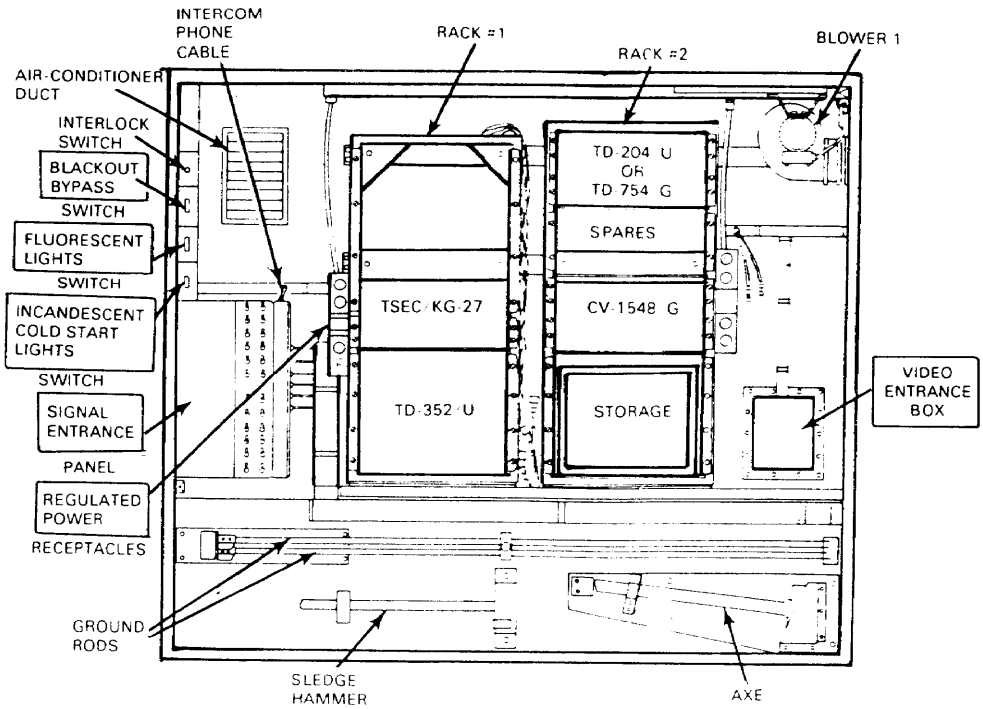

Curbside

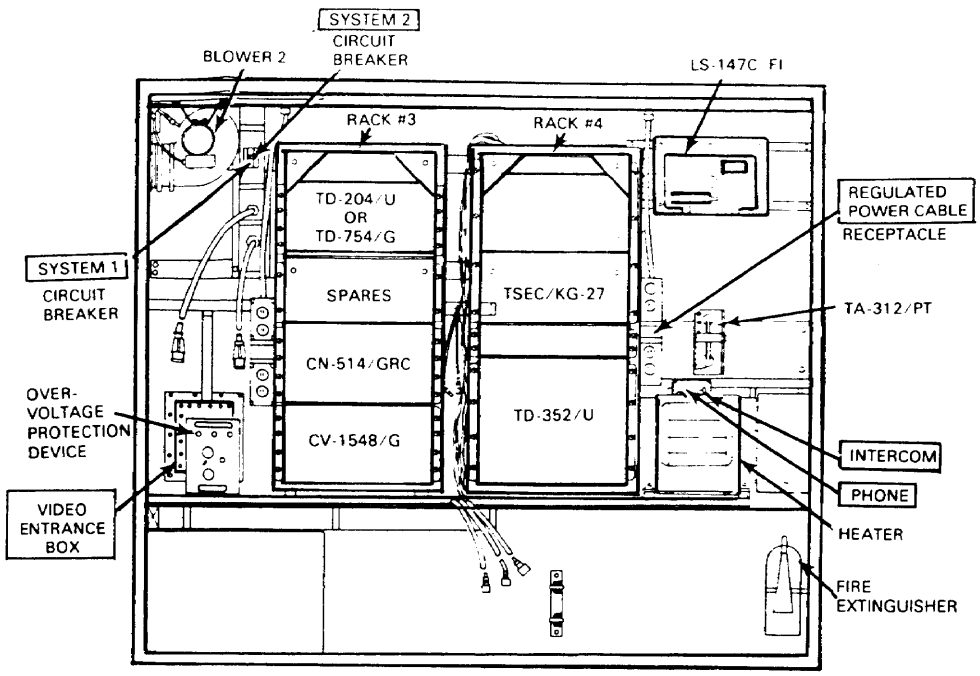

AN/TCC-65
Telephone Terminal

NSN: 5805-00-156-4368

Reference: TM 11-5805-371-14-2

General Information

The AN/TCC-65 is an air- or vehicular-transportable PCM telephone terminal. It provides four 12-channel or two 24-channel two-wire/four-wire voice secure/nonsecure telephone systems. The AN/TCC-65 will be modified to integrate the TD-1065 high speed serial data buffer and the TD-1069 TDDM as part of the system. This adds the ability to transceiver high speed data in addition to radio. Due to space restrictions, two of the four TD-754 cable combiners will be deleted. The TD-1065 will occupy the same space as the existing CV-1548s. Therefore, the new ability will be two 12-channel two-wire/four-wire voice; or two 12-channel four-wire voice/data; or two 24-channel two-wire/four-wire voice; or two 24-channel four-wire voice/data. The AN/TCC-65 is used in the division and corps area communications systems.

Major Components

1 Shelter S-333/TCC-65 (modified S-250/G)
1 Intercommunications Station LS-147F/FI
4 Converters CV-1548/G
4 High Speed Serial Data Buffers TD-1065/G (not a basic issue item)
4 Multiplexer TD-204/U
4 Multiplexer TD-660A/G
1 Telephone Set TA-312/PT
2 TDDMs TD-1069/G (not a basic issue item)
4 COMSEC Equipment TSEC/KG-27 (not a basic issue item)

Technical Characteristics

Power Requirement . . . . . 115 V AC, 50 to 60 Hz
Power Consumption . . . . . 4,090 W
Weight . . . . . 591 kg (1,302 lb)
Vehicular Requirement . . . . . 1 1/4-ton truck

AN/TCC-65
Telephone Terminal

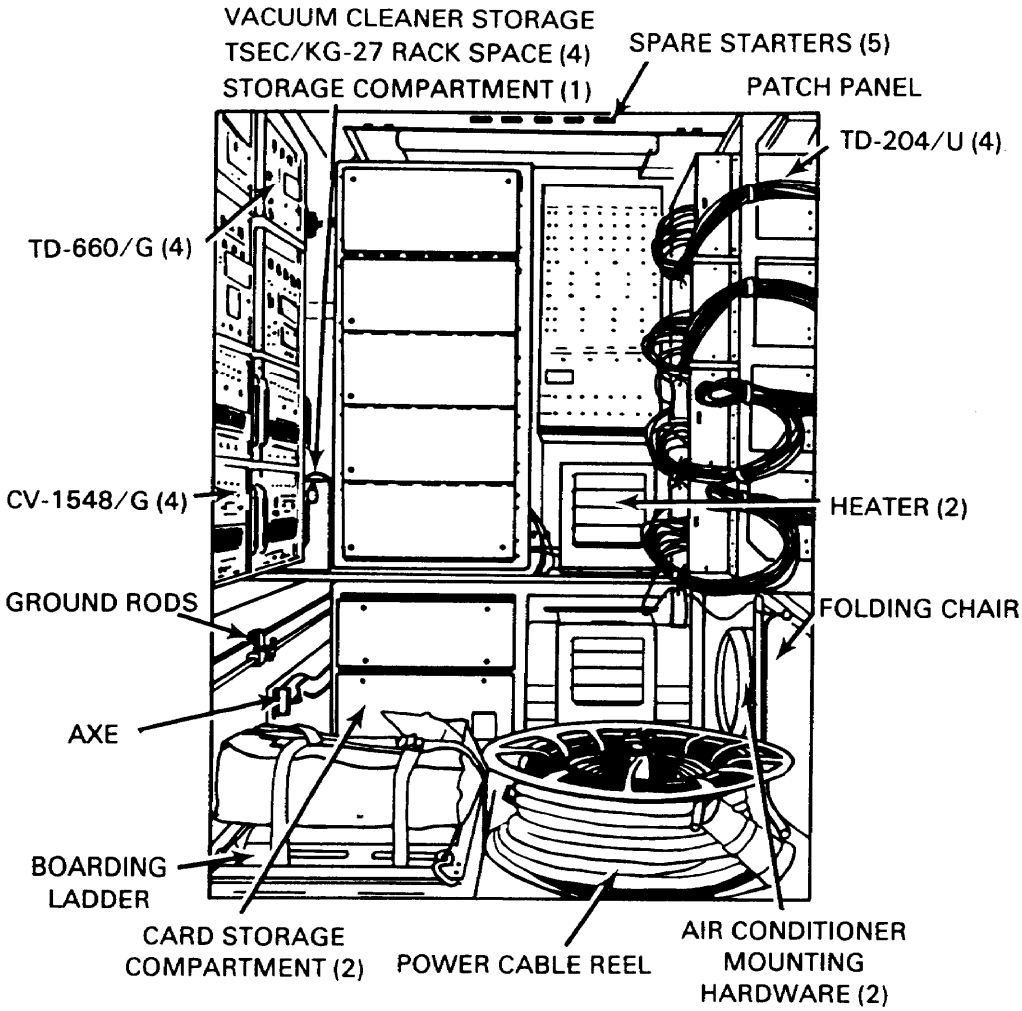

AN/TCC-72
Telephone Terminal

MN: 5805-00-155-5599

Reference: TM 11-5805-479-14-2

General Information

The AN/TCC-72 is an air- or vehicular-transportable PCM telephone terminal. It provides one 24-channel telephone terminal; or two 6- or 12-channel telephone terminals; or one 6-, 12-, 24-, or 48-channel telephone cable repeater; or one 24-channel telephone cable repeater with a nonsecure 6- or 12-channel drop-and-insert capability. Each 6- or 12-channel group can be secured with a TSEC/KG-27. The AN/TCC-72 is used in division and corps area communications systems. The AN/TCC-72 will be modified to integrate the TD-1065 and the TD-1069 as part of the system and will provide for the addition of high speed data access and wideband secure voice facilities.

Major Components

1 Shelter S-412/TCC-72 (modified S-250/G)
2 High Speed Serial Data Buffers TD-1065/G (not a basic issue item)
2 Converters CV-1548/G
2 Multipiexers TD-204/U
1 TDDM TD-1069/G (not a basic issue item)
2 Multiplexer TD-660A/G
1 Telephone Set TA-312/PT
1 Intercommunications Station LS-147F/FI

Technical Characteristics

Power Requirement . . . . . 115 V AC, 50 to 60 Hz
Power Consumption . . . . . 4,168 W
Weight . . . . . 72 kg (l,700 lb) approx
Vehicular Requirement 1 1/4-tontruck

AN/TCC-72
Telephone Terminal

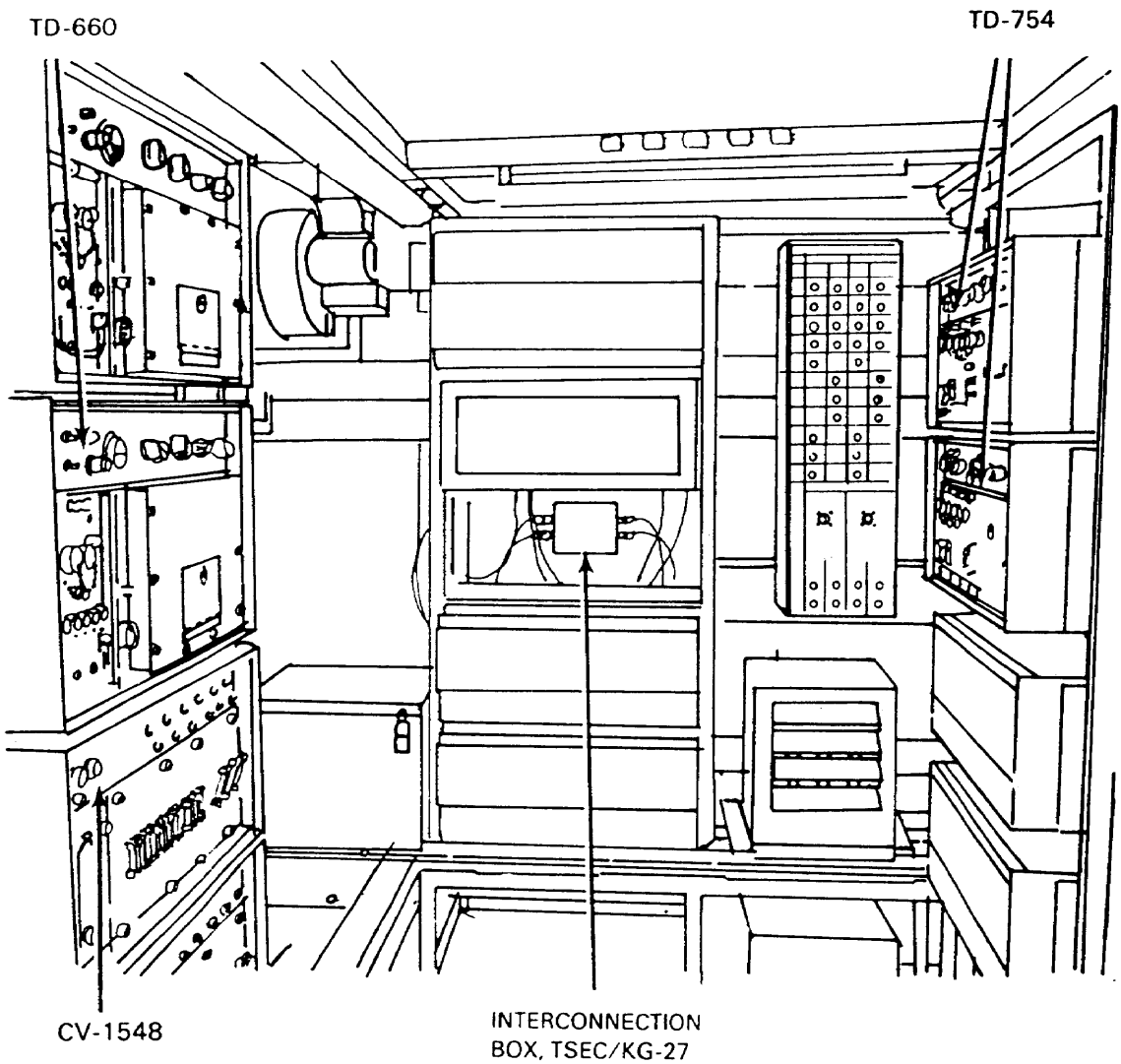

AN/TCC-73(V)l, AN/TCC-73(V)2, AN/TCC-73A(V'H and AN/TCC-73A(V)2 Telephone Terminals

NSN: 5805-00-134-5405 (AN/TCC-73(V)1)
5805-00-134-5404 (AN/TCC-73(V)2)
5805-01-102-0185 (AN/TCC-73A(V)1)
5805-01-135-7070 (AN/TCC-73A(V)2)

Reference: TM 11-5805-585-14-1

General Information

The AN/TCC-73 is an air- or vehicular-transportable assemblage that provides secure or nonsecure multiplex terminal or repeater facilities for Army area communications systems using PCM/TDM. Though mainly a cable terminal, it is used with other equipment for radio terminal applications. The AN/TCC-73 terminates up to four 12-channel or four 24-channel cable systems. The AN/TCC-73 may change to a (V)1 or a (V)2 configuration by installing or removing the TD-976/G. The AN/TCC-73A(V)1 contains all equipment specified for an AN/TCC-73A(V)2 plus two TD-976/Gs. An additional TD-976/G increases channel capacity from four 12-channel or four 24-channel cable systems ((V)2 model) to one 96-channel or two 48-channel cable systems ((V)1 model). The AN/TCC-73A(V)1 and the AN/TCC-73A(V)2 can install up to eight TD-1065/Gs and two TD-1069/Gs.

Major Components

Nomenclature	73(V)1	73(V)2	73A(V)1	73A(V)2
TD-1065/G			8*	8*
TSEC/KG-27*	8	8	8*	8*
CV-1548/G	8	8	8	8
TD-660/AG	8	8	8	8
TD-754/G or TD-204/U	4	4	8	8
TD-976/G	2		2	
TD-1069/G*			2*	2*
TA-3121PT	1	1	1	1
LS-147C/Fl	1	1	1	1

***Additional authorized components. Upon the installation of these components, removal of existing components may be necessary.**

Technical Characteristics

Power Requirements	115 V AC, 50 to 60 Hz single phase
Power Consumption (max):	
73(V)1	6,072 W
73(V)2	5,772 W
73A(V)1	6,124 W
73A(V)2	5,824 W
Weight:	
73(V)1	2,068 kg (4,555 lb)
73(V)2	2,406 kg (5,300 lb)
73A(V)1	2,406 kg (5,300 lb)
73A(V)2	2,156 kg (4,749 lb)
Prime Mover	One 2 1/2-ton truck

AN/TCC-73(V)1, AN/TCC-73(V)2, AN/TCC-73A(V)1 and AN/TCC-73A(V)2 Telephone Terminals

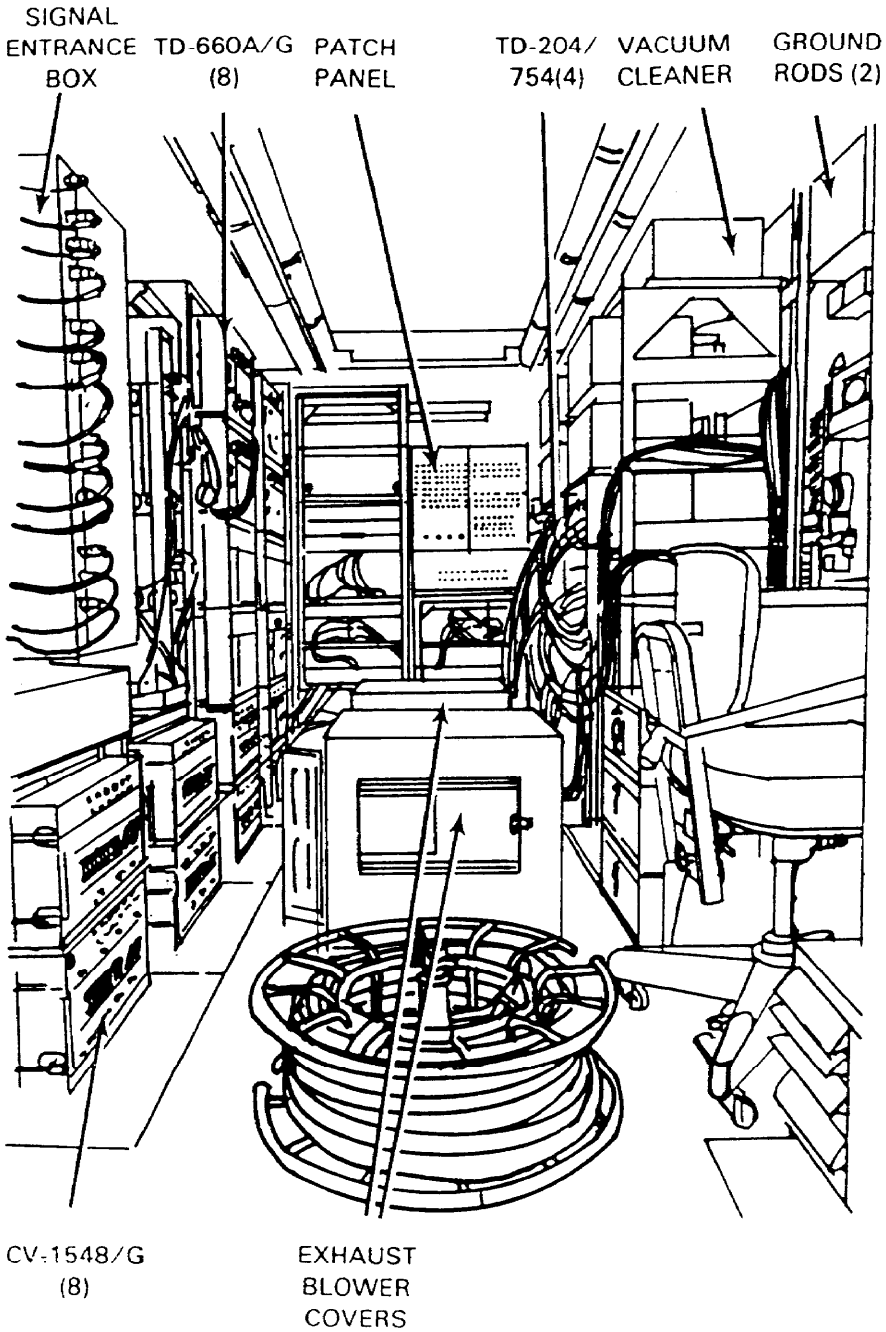

AN/TRC-113(V)1
Radio Repeater Set

NSN: 5820-00-868-8211

Reference: TM 11-5820-562-14

General Information

The AN/TRC-113 is an air- or vehicular-transportable radio repeater set which provides radio repeater or radio terminal facilities for LOS systems in forward areas. It can be used as a 6- or 12-channel PCM radio repeater; or as three 12-channel PCM radio terminals; or as one 12- or 24-channel PCM cable repeater. A telephone terminal such as the AN/TCC-65 is required when the AN/TRC-113 is used in split terminal configuration. The radio antennas are carried on the generator trailer.

Major Components

Nomenclature	113(V)1	113(V)2	113(V)3	113A(V)1	113A(V)2	113A(V)3
Radio Set AN/GRC-103(V)1	3			3		
Radio Set AN/GRC-103(V)2					3	
Radio Set AN/GRC-103(V)3			3			3
Multiplexer TD-204/U	3	3	3			
Multiplexer TD-754/G				3	3	3
Telephone Set TA-312/PT	1	1	1	1	1	1
Intercom Station LS-147F/FI	1	1	1	1	1	1

Technical Characteristics

Frequency and Power Output:
- Band 1 . . . . . 220 to 404.5 MHz; 25 W
- Band 2 . . . . . 94.5 to 705.0 MHz; 15 W
- Band 3 . . . . . 695.0 to 1000 MHz; 15 W

Power Requirement . . . . . 115 V AC, 50 to 60 Hz
Power Consumption . . . . . 5,000 W
Weight . . . . . 579 kg (1,275 lb)
Vehicular Requirement . . . . . One 1 1/4-ton truck

AN/TRC-113(V)1
Radio Repeater Set

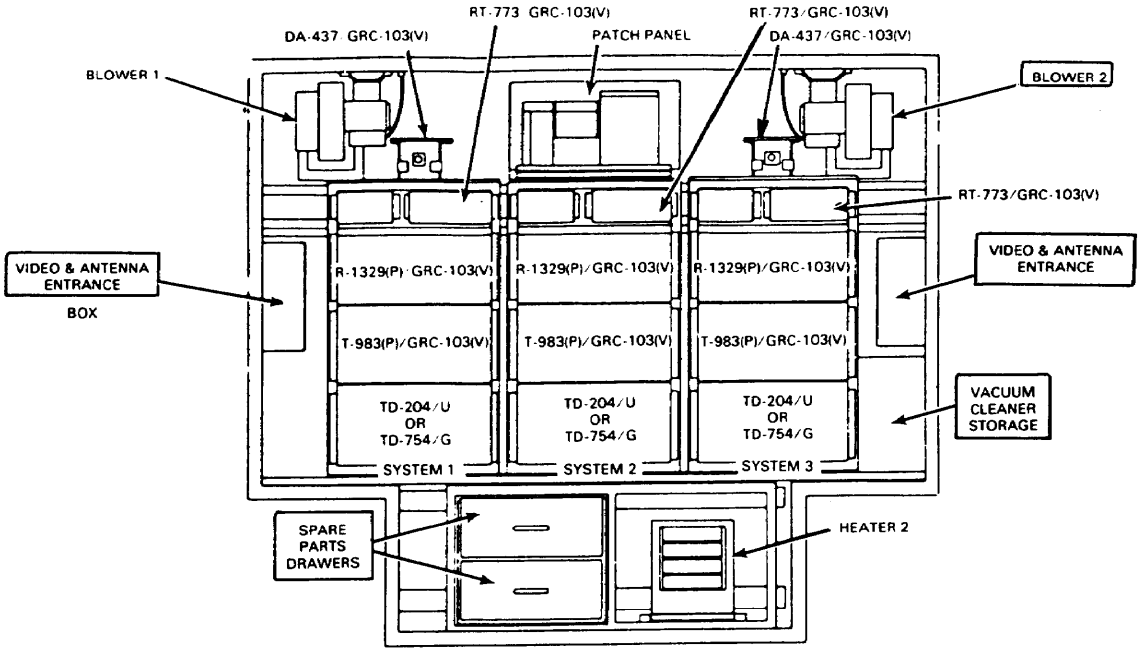

AN/TRC-121
Radio Terminal Set

NSN: 5820-00-168-1562

Reference: TM 11-5820-602-15

General Information

The AN/TRC-121 is an air-or vehicular-transportable radio terminal which provides a tropospheric scatter capability in corps and above command systems. It terminates two 12- or 24-channel PCM voice systems when used in conjunction with telephone terminals such as AN/TCC-60 or AN/TCC-61. An AN/GRC-106 radio provides for alignment of the AN/GRC-143 system and for communications while mobile.

Major Components

1 Shelter S-338/TRC-121 (modified S-280/G)
1 Radio Set AN/GRC-106
1 Telephone Set TA-312/PT
2 Radio Sets AN/GRC-143
2 Antenna Groups AN/TRA-37
1 Power Supply PP-4763A/GRC
1 Intercommunications Station LS-147F/FI
2 Converters CV-425/U

Technical Characteristics

Power Requirement . . . . . 115 or 230 V AC, 50 to 60 Hz
Power Consumption . . . . . 23,400 W
Weight . . . . . 2,338 kg (5,150 lb)
Vehicular Requirement . . . . . One 2 1/2-ton truck (AN/TRC-121),
One 2 1/2-ton truck (AN/TRA-37)

AN/TRC-121
Radio Terminal Set

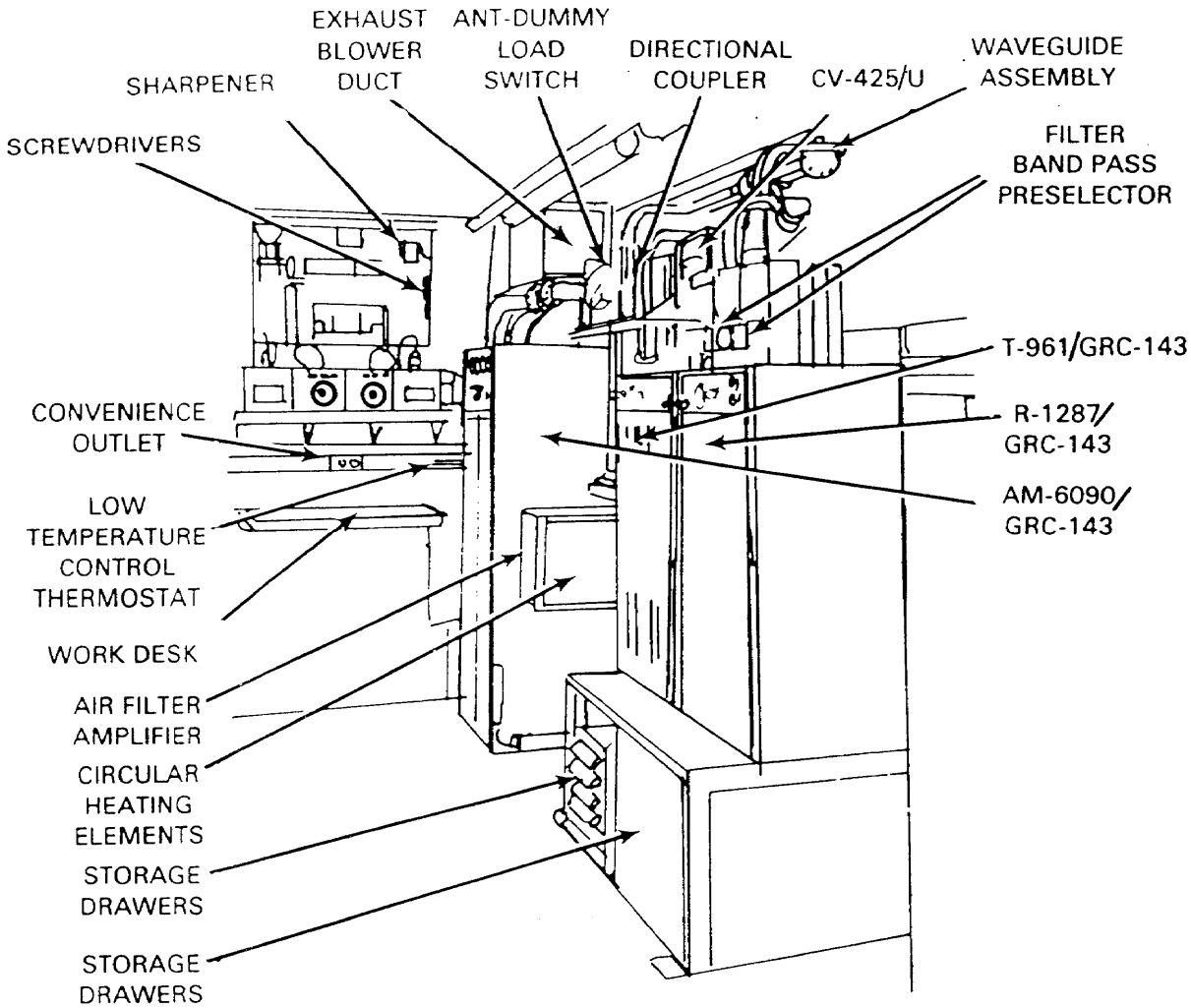

AN/TRC-138
Radio Repeater Set

NSN: 5820-00-133-8841

Reference: TM 11-5820-773-15

General Information

The AN/TRC-138 is an air- or vehicular-transportable radio repeater which provides LOS capability in the corps area communications system. It terminates three 48-channel PCM voice systems when used in conjunction with telephone terminals such as the AN/TCC-61 or AN/TCC-73(V)1. The AN/TRC-138 is often used in 12/24-channel mode. The operating procedures are the same for Mast Assembly AB-621/G and Antenna AS-1425/GRC. The components for the antenna systems are stored in the shelter and Power Unit PU-631/G. The AN/TRC-138 is modified to install Radio Set AN/VRC-465 and Power Supply PP-2953/U which are table(s) of organization and equipment (TOE) components not supplied with the assemblage.

Major Components

1 Shelter S-393/TRC-138 (modified S-280/G)
3 Radio Sets AN/GRC-144
1 Telephone Set TA-312/PT
3 Converters CV-425/U
1 Intercommunications Station LS-147F/FI

Technical Characteristics

Power Requirement . . . . . 115 V AC, 50 to 60 HZ
Power Consumption . . . . . 5 kW
Weight . . . . . 2,009 kg (4,425 lb)
Vehicular Requirement . . . . . One 2 1/2ton truck

AN/TRC-138
Radio Repeater Set

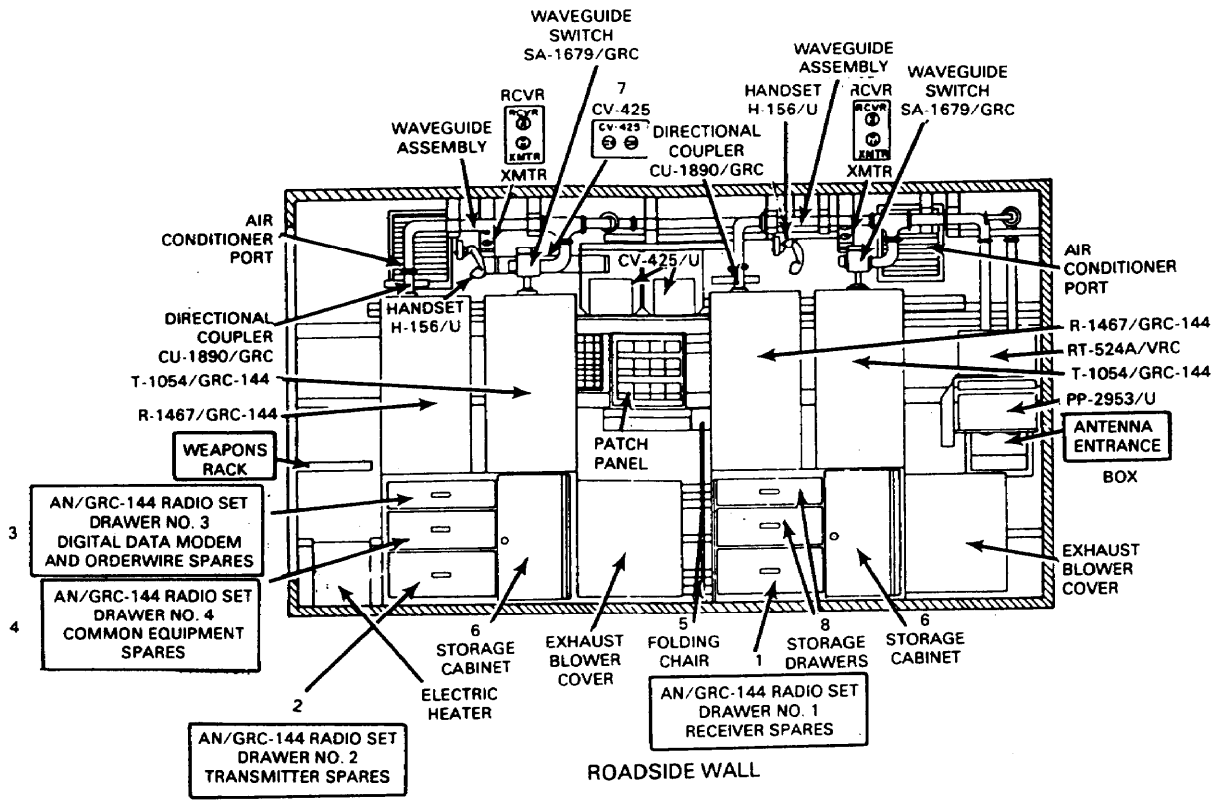

AN/TRC-138A
Radio Repeater Set

NSN: 5820-01-161-9419

Reference: TM 11-5820-926-12-1

General Information

The AN/TRC-138A is a tactical communications assemblage with multiple system deployment. The primary purpose is to provide a 576-channel system SRWBR link between the radio park (top of the hill) and the Radio Terminal Set AN/TRC-175 (bottom of the hill). It also is used as a radio repeater to provide LOS a (40 km (25 mi) maximum) microwave link (24/144 channel) between two external AN/TRC-138As, and is used as a radio/cable terminal to terminate up to 72/144 low-speed channel systems (30 mi maximum). The AN/TRC-138A can terminate three PCM or DGM systems, or eleven PCM/DGM systems. It is compatible with TRI-TAC.

Major Components

3 Radio Sets AN/GRC-222
1 DSVT TSEC/KY-68
1 Cable Modem Driver MD-1024/G
1 Multiplexer TD-1237(P)/G
1 Loop Encryption Device TSEC/KG-84
3 Digital Data Modems MD-1026 (P)/G
1 Intercommunications Station LS-147F/Fl
1 Voice Encryption Device TSEC/KY-57
1 Shelter S-667/TRC-138A

Technical Characteristics

Frequency Range	4.4 to 5.0 GHz
Transmission Range:	
LOS	Up to 40 km (25 mi)
SRWBR	8 km (5 mi)
Cable Driver Modem	8 km (5 mi) with repeaters
RF Output	250 mW
Channelization	TDM
Number of Channels	SRWBR 576 channel link (from AN/TRC-175) 24/144 channel link (node-to-node) from another AN/TRC-138A or AN/TRC-175
Orderwires:	
Digital Voice	16 kbls
Analog Voice	300 to 1800 Hz at 3 dB bandwidth points
Weight	2,424 kg (5,340 lb) including shelter
Power Requirement	115 V AC ± 6 volts, 50/60/400 Hz, 3-phase
Power Unit	PU-631
Mounting	S-667 Shelter

AN/TRC-138A
Radio Repeater Set

Roadside

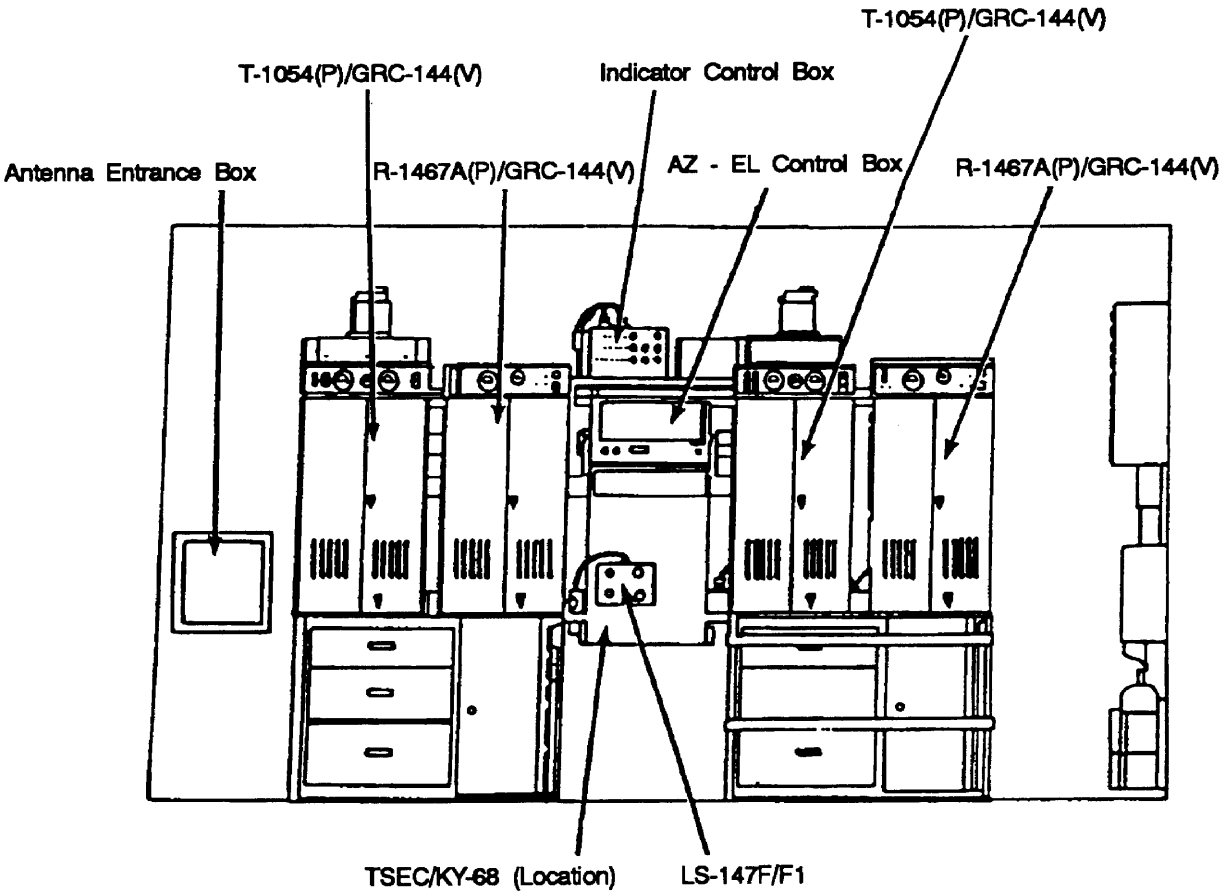

AN/TRC-138A
Radio Repeater Set

Curbside

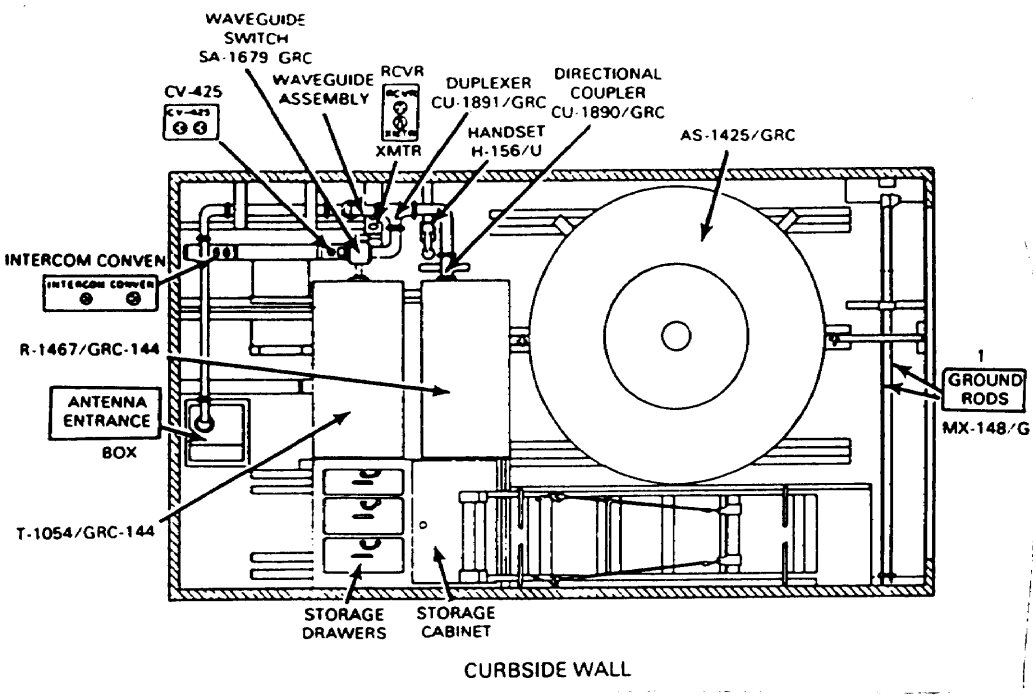

AN/TRC-145(V)
Radio Terminal Set

NSN: 5820-00-451-5523 (AN/TRC-145(V)1 and AN/TRC-145A(V)1)
5820-00-451-5590 (AN/TRC-145(V)2 and AN/TRC-145A(V)2)
5820-00-451-5618 (AN/TRC-145(V)3 and AN/TRc-145A(V)3)
5820-01-104-4748 (AN/TRC-14513(V)1)
5820-01-099-3578 (AN/TRC-145B(V)2)
5820-01-099-3577 (AN/TRC-145B(V)3)

Reference: TM 11-5895-453-14-2

General Information

The AN/TRC-145 is an air- or vehicular-transportable assemblage. It is normally used in division and forward area PCM communications systems for cable, radio terminal, or repeater applications. The two equipment sets of the AN/TRC-145 may be arranged for normal use as a terminal, a repeater, or a radio cable conversion facility as indicated below.

Terminal Arrangement:

2 6- or 12-channel secure or nonsecure radio terminal facilities
2 6- or 12-channel secure or nonsecure cable terminal facilities
1 24-channel secure or nonsecure cable terminal facility
2 Separate 12-channel groups of data or teletype over one secure or nonsecure channel of the Multiplexer TD-660 System 1 or 2 (channel 7 dedicated) (on AN/TRC-145B model only)

Repeater Arrangements:

1 12- or 24-channel cable repeater facility
1 24-channel secure or nonsecure cable repeater with 6- or 12-channel drop-and-insert facility
1 Radio repeater facility
2 12-channel radio-to-cable conversion

Technical Characteristics

Power Requirement ..... 115 V AC ± 6 V, 50 to 60 Hz
Power Consumption ..... 3,000 W (approx)
Weight ..... 670 kg (1,475 lb)
Vehicular Requirement ..... 1 1/4-ton truck (antenna asembly transported on power unit trailer normally a PU-625/G, 3 kW)

AN/TRC-145(V) Radio Terminal Set

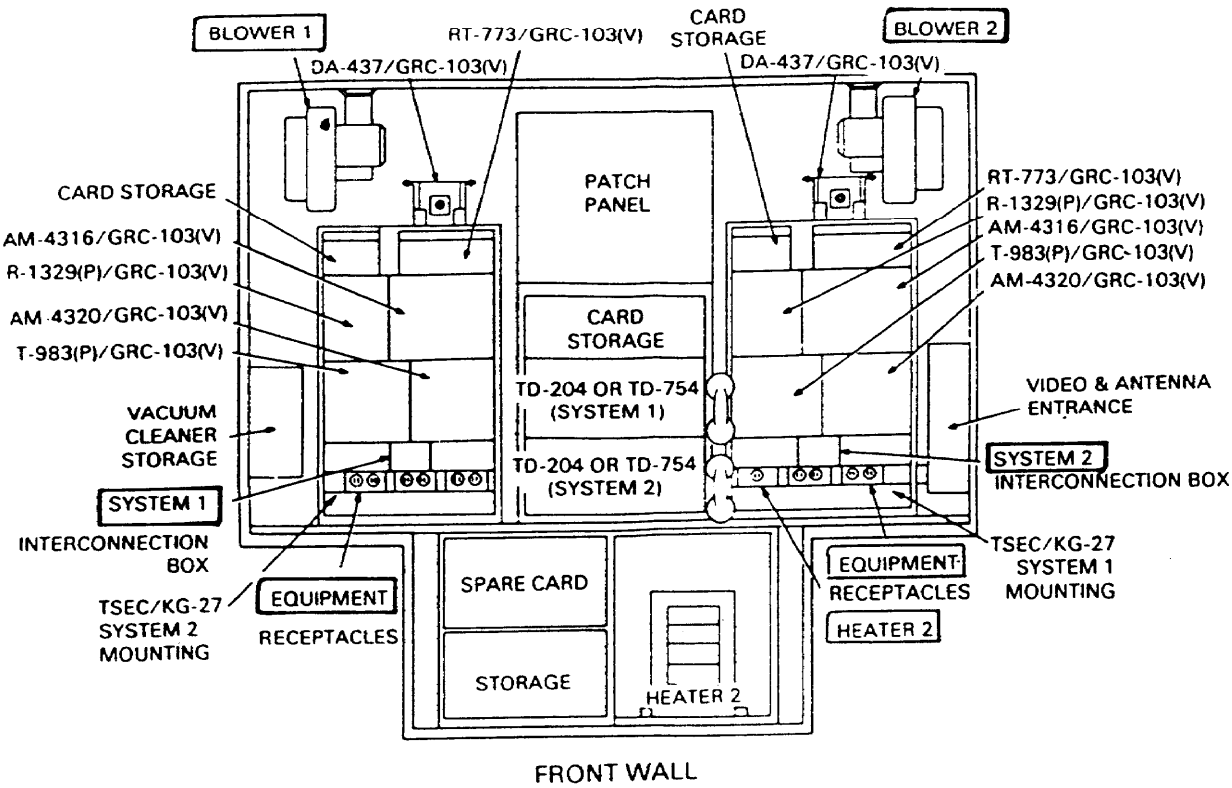

AN/TRC-145(V)
Radio Terminal Set (Cont.)

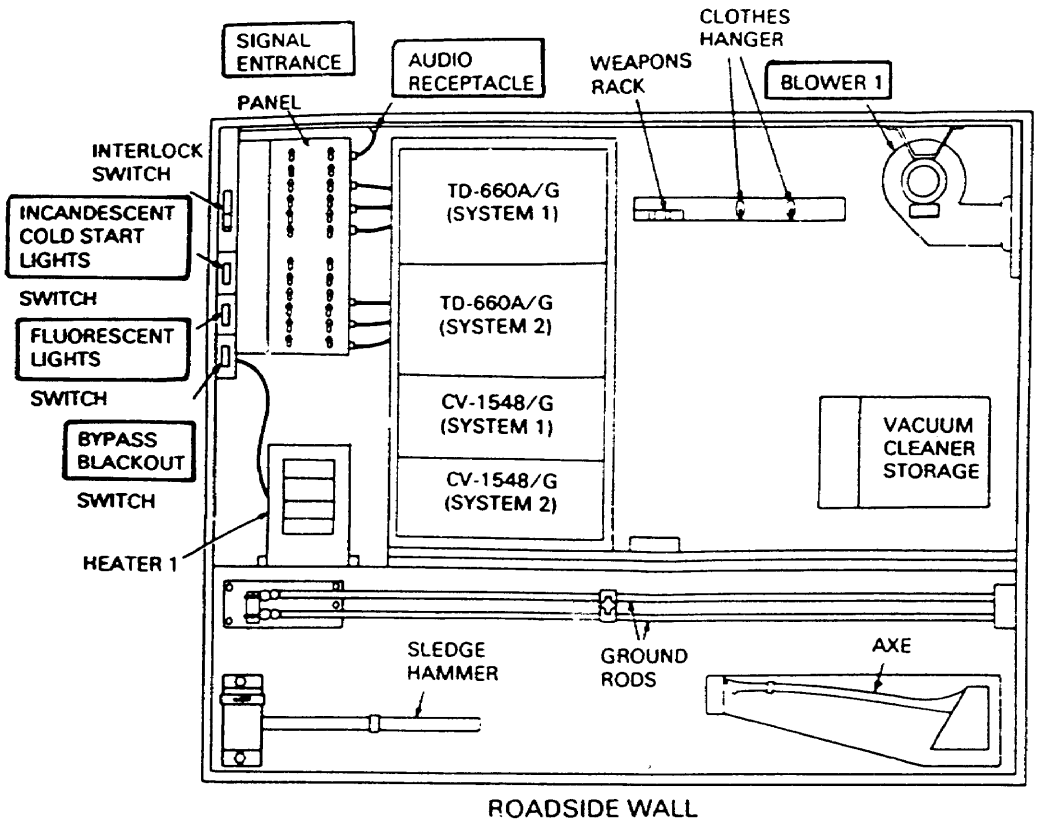

AN/TRC-151(V)
Radio Terminal Set

NSN: 5820-00-006-1843

Reference: TM 11-5820-894-14

General Information

The AN/TRC-151(V) is an air- and ground-transportable assembly. It provides multichannel radio and cable tactical communications systems using PCM and TDM for Army and corps headquarters. The AN/TRC-151 (V) may be used as a 12- or 24-channel radio or cable terminal, as a remote drop-and-insert facility, or as a radio or cable repeater. The AN/TRC-151(V) is equipped with Radio Set AN/GRC-103(V)4 using Band IV heads and antennas. The basic equipment provides VF service for both voice telephone and teletype circuits. The option to install the High Speed Serial Data Buffer TD-1065/G will enable the equipment to handle 16- or 32-kilobit serial digital data. Another option, TDDM TD-1069/G, provides an additional 12 channels for digital data inputs. The AN/TRC-151(V) is equipped with rack space and cabling for optional equipment including TSEC/KG-27 for secure operation. The typical planning range using radio links is 48 km (30 mi) LOS; however, when using Band IV, the radio range may be affected by tall trees and dense foliage.

Major Components

1 Shelter S-583(*)/TRC-151
2 High Speed Serial Data Buffers TD-1065/G*
2 Radio Sets AN/GRC-103(V)4
1 High Speed Digital Multiplexer*
2 Multiplexer TD-660/G
2 Multiplexer TD-754/G
2 Key Generators TSEC/KG-27*
2 Telephone Signal Converters CV-1548(*)/G

***Optional equipment, not supplied with AN/TRC-151(V).**

Technical Characteristics

Power Requirement	115 V AC, 50-60 Hz, single phase
Power Consumption operating, one heater, blower, with flourescent lights	3,500 W
Frequency Range (Band IV)	1350 to 1850 MHz
Modulation	FM
Transmitter Power Output	15 W minimum
Pulse Type	binary pulse
Pulse Rate	12-channel: 576 Hz 24-channel: 1152 kHz
Prime Mover	2 1/2-ton vehicle

AN/TRC-151(V)
Radio Terminal Set

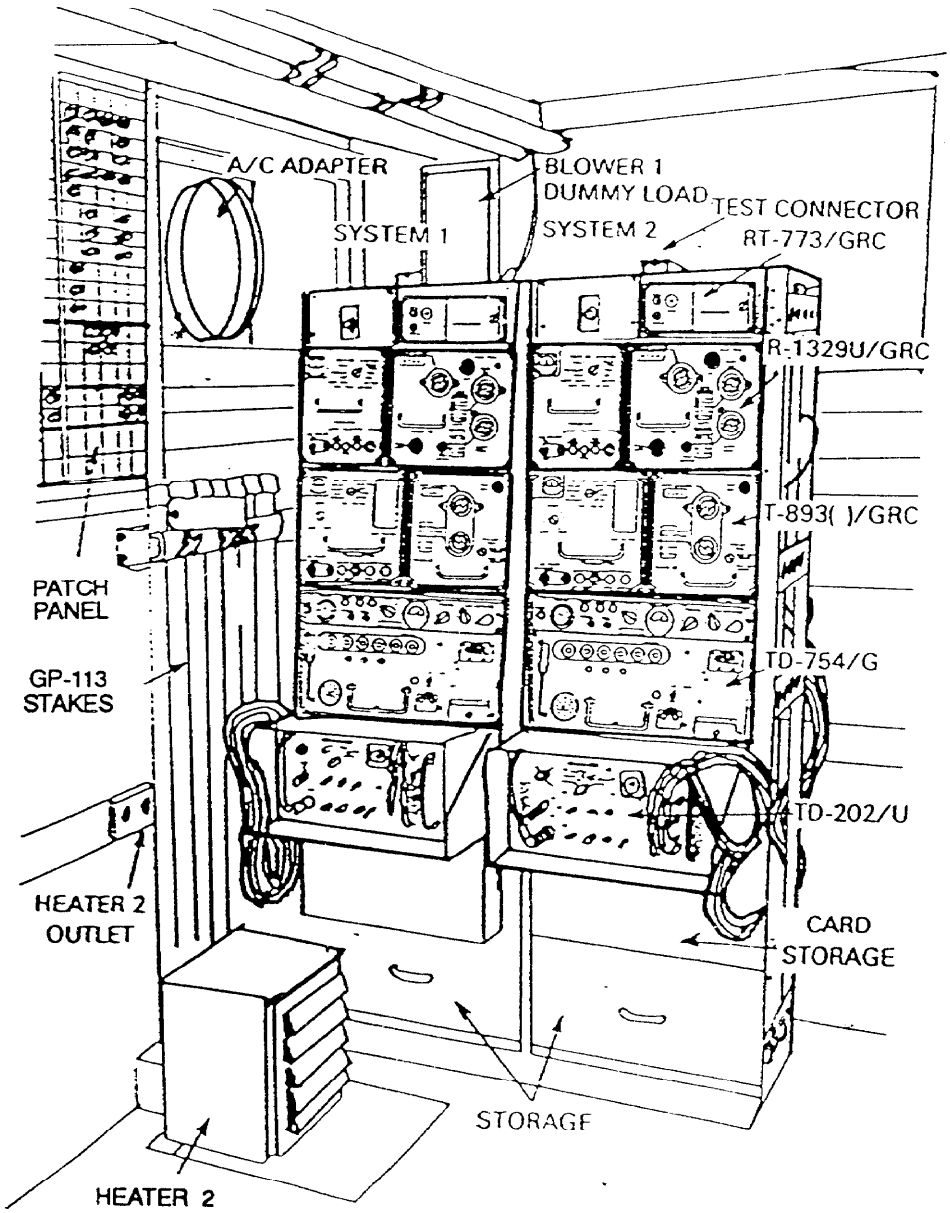

AN/TRC-151(V)
Radio Terminal Set (Cont.)

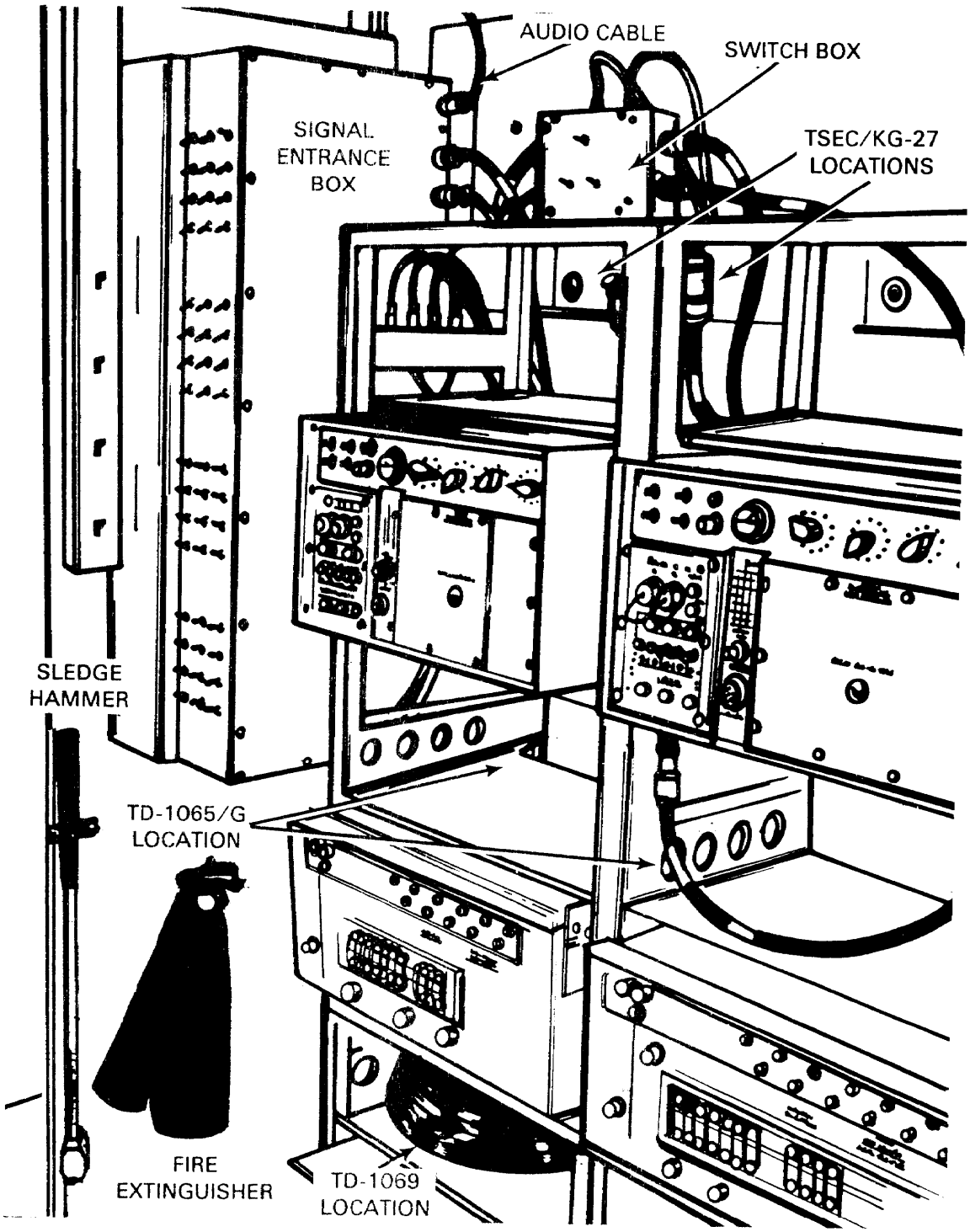

AN/TRC-170(V)
Radio Terminal Set

NSN: 5820-01-148-3977

Reference: TM 11-5820-934-13-1-1

General Information

The AN/TRC-170(V) provides tactical multichannel digital troposcatter or LOS systems for transmission of analog and digital traffic. It can terminate one system. It is deployed at hybrid nodes for internodal and extended range (skip node) communications. The AN/TRC-170(V)2 replaces the AN/TRC-132 troposcatter radio set. The AN/TRC-170(V)3 replaces the AN/TRC-11 2/121 troposcatter radio sets.

Major Components

1 Radio Set AN/GRC-197
1 DSVT KY-68
1 Digital Data Group Modem MD-10260(P)/G
1 VINSON TSEC/KY-58
1 Electronic Transfer Device (ETD) KYK-13
2 Loop Group Multiplexer TD-1235( )/TTC
1 (or QRA) Antenna System 3 meters
1 Trunk Group Multiplexer TD-1236( )/G
1 Voice Orderwire Control Unit C-10602/TRC-170
1 Low Speed Cable Driver Modem MD-1023()/G
2 High Power Amplifiers (2 kW) ((V)2)
1 High Power Amplifier (2 kW) ((V)3)
1 Environmental Control Unit
1 Tropospheric Scatter Modem OM-61/TRC-170
2 Trunk Encryption Devices TSEC/KG-81
2 Synthesizers SN-531/TRC-170 ((V)2)
1 Synthesizer SN-531/TRC-170 ((V)3
2 Dedicated Loop Encryption Devices TSEC/KG-84
1 High Wind Kit 951-211-1

Technical Characteristics

Number of Channels	8 to 144
Data Rates	128 to 4,096 kb/s
Frequency Range	4 to 5.0 GHz
Power Output	2 kW
Diversity	(V)2: Quad or Dual (V)3: Dual Bandwidth (V)2: 3.5 or 6 MHz (V)3: 3.5 or 7 MHz
Range	(V)2: 241 km (150 mi) (V)3: 161 km (100 mi)
Power Requirement	120/208 V AC, 50/60/400 Hz
Weight	(V)2: 3,859 kg (8,500 lb) (with shelter) (V)3: 2,656 kg (5,850 lb)(with shelter)
Shelter	(V)2: Modified S-280 (V)3:Modified S-250

AN/TRC-170(V)
Radio Terminal Set

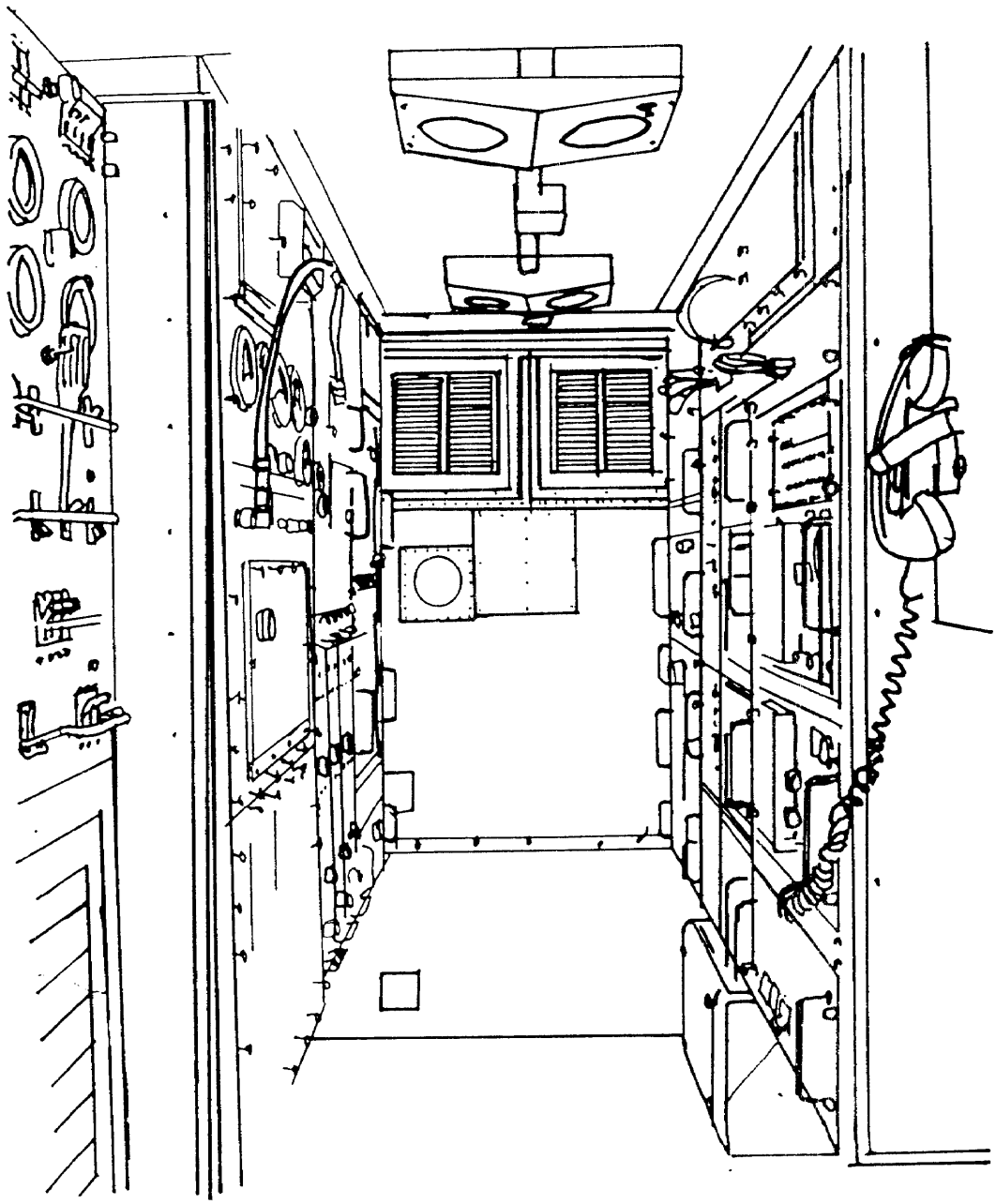

AN/TRC-173
Radio Terminal Set

NSN: 5820-01-161-9422

Reference: TM 11-5820-865-12-1

General Information

The AN/TRC-173 operates as a radio or cable terminal and can terminate up to two 18/36 digital multichannel LOS systems. The AN/TRC-173 replaces the AN/TRC-117 and AN/TRC-151 and is used in extension applications.

Major Components

1 Shelter S-589
1 VINSON TSEC/KY-58
2 Radio Sets AN/GRC-103(V)4
1 Power Supply 28 V DC
2 Trunk Encryption Devices TSEC/KG-81
2 Antennas AS-3047/GRC-103
2 Masts AB-57
2 Trunk Group Multiplexer TD-1236()/G
2 Mast Extension Kits MK-806
1 Intercommunications Station LS-147F/FI
4 Remote Multiplexer Combiners TD-1234()/TTC
1 Frequency Electronic Converter CV-2500
2 Remote Loop Group Multiplexer Cable Driver Modems MD-1025()/G
2 Dummy Loads DA-437/GRC-103
2 Low Speed Cable Driver Modems MD-1023()/G
1 TA-312/PT
1 Headset H-182/PT
2 Digital Data Group Modems MD-1026()(P)/G (up to four modems per case)
1 DSVT KY-68
1 Electronic Transfer Device (ETD) KYK-13
1 Net Control Device KYK-l5/TSEC
1 Digital Data Modem MD-1065()(P)/G (103 modem) (two radio modems per case)
1 Fill cable ancillary components and spares
1 Tape Reader KOI-18
1 Dedicated Loop Encryption Device TSEC/KG-84
1 SINCGARS Radio
1 Power Unit AN/MJQ-19
1 Orderwire Control Unit C-10716

Technical Characteristics

Frequency Range . . . . . Range 1.35 to 1.85 GHz (Band IV)
Power Output . . . . . 15W(Band IV)
Range . . . . . 64 km(40mi)
Power Requirement . . . . . 115 V AC, single phase
Weight . . . . . 2,179 kg (4,800 lb)
Shelter S-589

AN/TRC-173
Radio Terminal Set

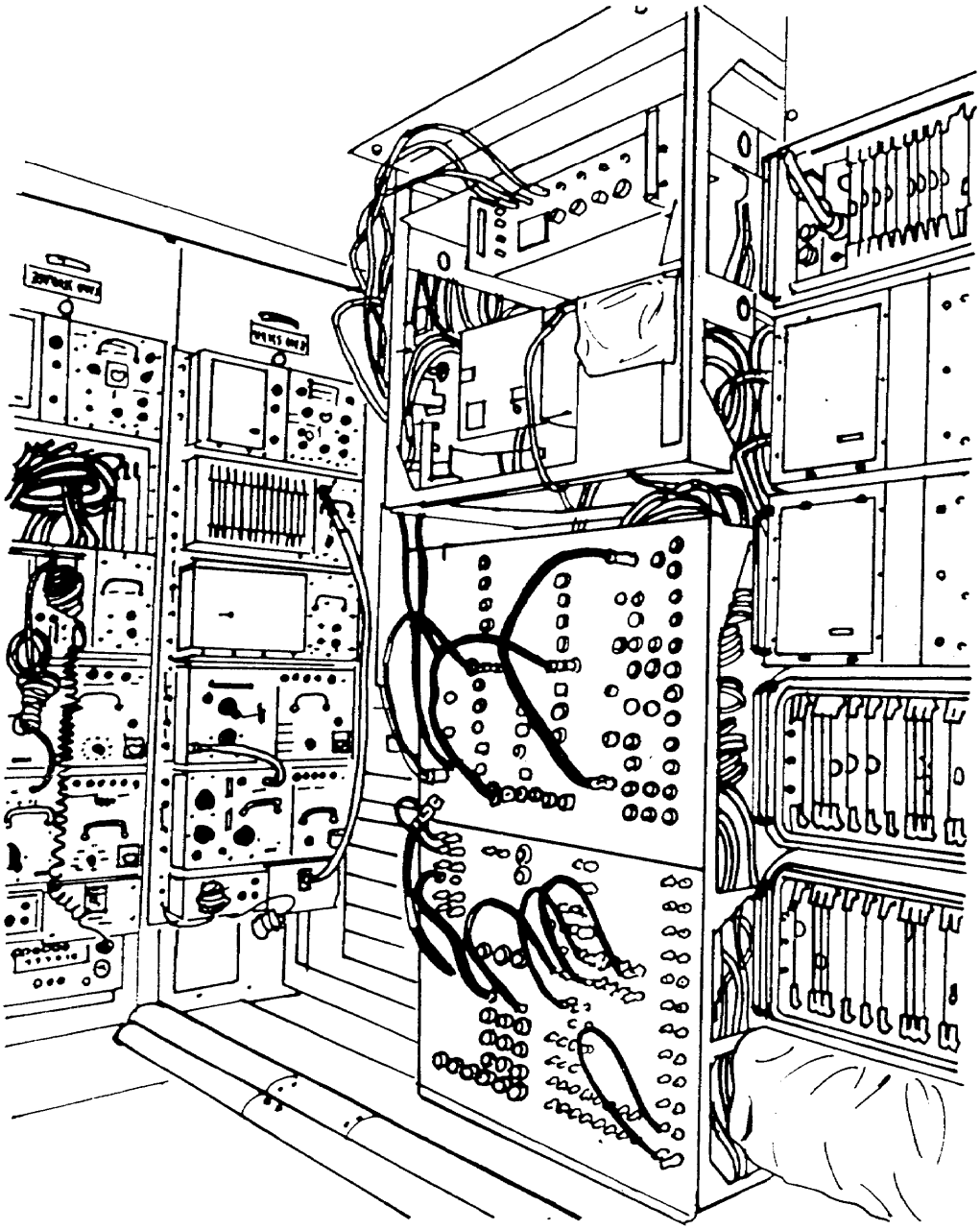

AN/TRC-174
Radio Repeater

NSN: 5820-01-161-9420

Reference: TM 11-5820-864-12-1

General Information

The AN/TRC-174 operates as a radio repeater or split radio terminal and can terminate up to three 18/36 digital multichannel LOS systems. It will be deployed in hybrid (analog/digital) integrated tactical communications system (INTACS) nodes and extension systems during the transitional period. In split terminal operation it connects to the CNCE by CX-11230 or SRWBR. The AN/TRC-174 replaces the AN/TRC-110 and AN/TRC-152.

Major Components

3 Radio Sets AN/GRC-103(V)4
3 Masts AB-577
3 Low Speed Cable Driver Modems MD-1023()/G
3 Mast Extension Kits CY-4507
1 Intercommunications Station LS-147F/FI
1 Digital Data Group Modem MD-1026()(P)/G (up to four modems per case)
1 Frequency Electronic Converter CV-2500
1 Digital Data Modem MD-1065()(P)/G (103 Modem) (three radio modems per case)
3 Dummy Loads DA-437/GRC-103
1 Telephone TA-312/PT
1 Headset H-182/PT
2 Dedicated Loop Encryption Devices TSEC/KG-84
1 Power Unit AN/MJQ-19 ancillary components and spares
1 Olderwire Control Unit C-10716 (OCU Type 1)
1 DSVT KY-68
1 ETD KYK-13
1 VINSON TSEC/KY-58
1 Fill Cable
1 Power Supply 28 V DC
1 Tape Reader KOI-18
3 Antennas AS-3047/GRC-103
1 SINCGARS Radio

Technical Characteristics

Frequency Range . . . . . 1.35 to 1.85 GHz (Band IV)
Power Output . . . . . 15 W (Band IV)
Range . . . . . 48 km(30mi)
Power Requirement . . . . . 115 V AC, single phase
Weight . . . . . 2,134 kg (4,700 lb)
Shelter S-590

AN/TRC-174
Radio Repeater

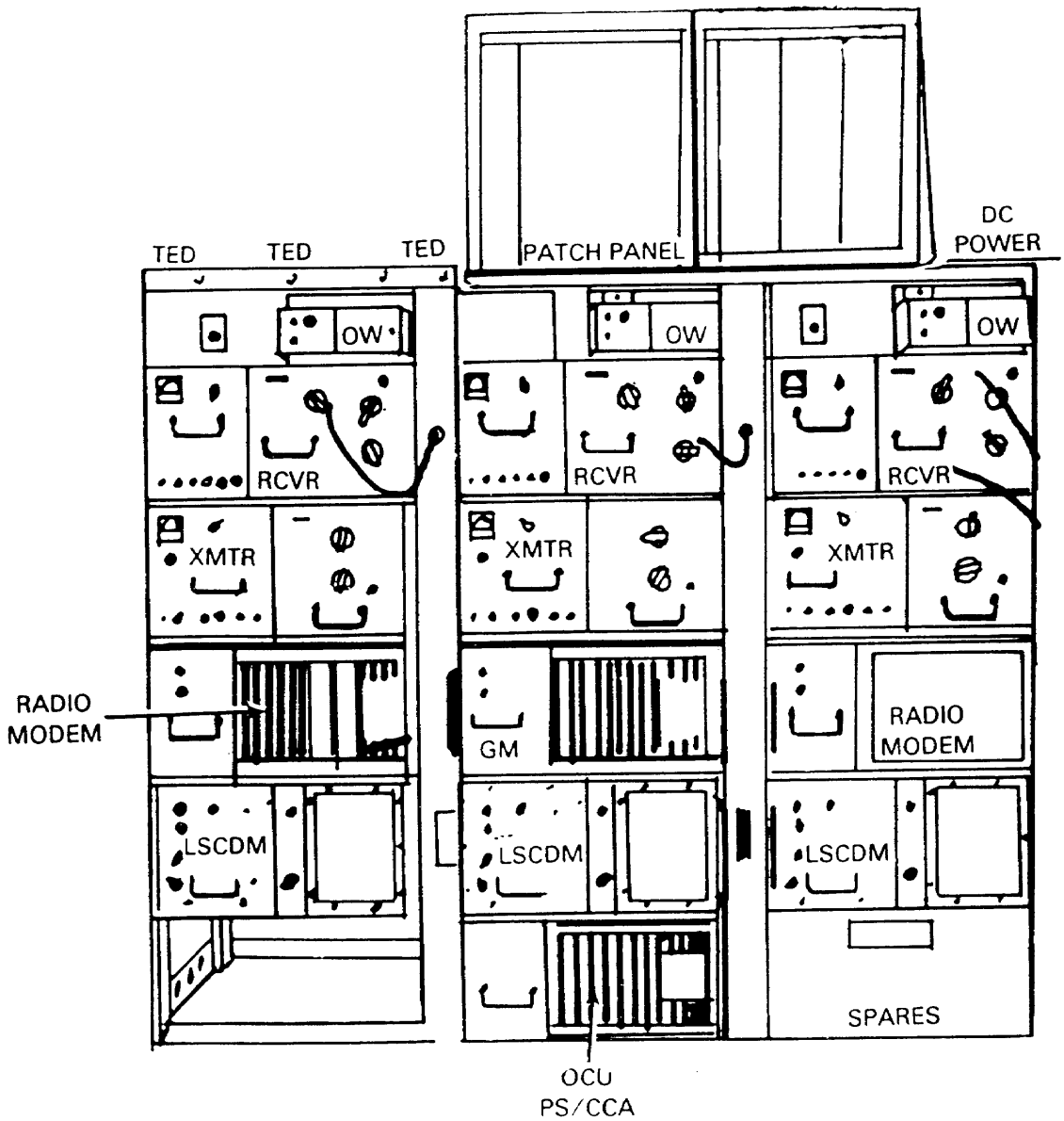

AN/TRC-175
Radio Terminal Set

NSN: 5820-01-161-9421

Reference: TM 11-5820-931-12-1

General Information

The AN/TRC-175 is a transportable, secure radio/cable tactical communications assemblage, capable of multiple system deployment. It provides SRWBR transmission facilities for bottom-of-hill nodes. It operates as a SRWBR terminal or cable terminal for high speed cable systems and can terminate up to two 576 digital channel systems. The AN/TRC-175 is employed at the bottom-of-the-hill node to provide a SRWBR link up to 8 km (5 mi) with the AN/TRC-138A located at the top-of-the-hill radio park. The AN/TRC-175 is compatible with TRI-TAC.

Major Components

1 Shelter S-591
1 Alarm Status Indicator ID-2324(V)4TRC
2 Radio Sets AN/GRC-144(V)3
2 Multiplexer TD-1237(P)/G
1 Loop Encryption Device TSEC/KG-84
2 Cable Modem Drivers MD-1024/G
4 Digital Data Modems MD-1026(P)/G
1 Voice Encryption Device TSEC/KY-57
1 Orderwire Control Unit C-10717/TRC
1 Intercommunications Station LS-147F/FI

Technical Characteristics

Frequency Range AN/GRC-144(V)3 . . . . . 4.4 to 5.0 GHz
Transmission Range AN/GRC-144(V)3 . . . . . 8 km (5 mi) at 18.72 mb/s; 24 km (15 mi) at 9.36 mb/s
Cable Driver Modem . . . . . 8 km (5 mi) (with repeaters)
RF Output . . . . . 250 mW
Channelization . . . . . TDM
Number of Channels . . . . . SRWBR 576-channel link (with AN/TRC-138A)
Orderwires:
  Digital Voice . . . . . 16 kb/s
  Analog Voice . . . . . 300 to 1800 Hz at 3 dB bandwidth points
  Power Requirement . . . . . 115 V AC, ± 6 volts, 50, 60, 400 Hz, 3-phase
Weight . . . . . 2,338 kg (5,150 lb)

AN/TRC-175
Radio Terminal Set

Roadside

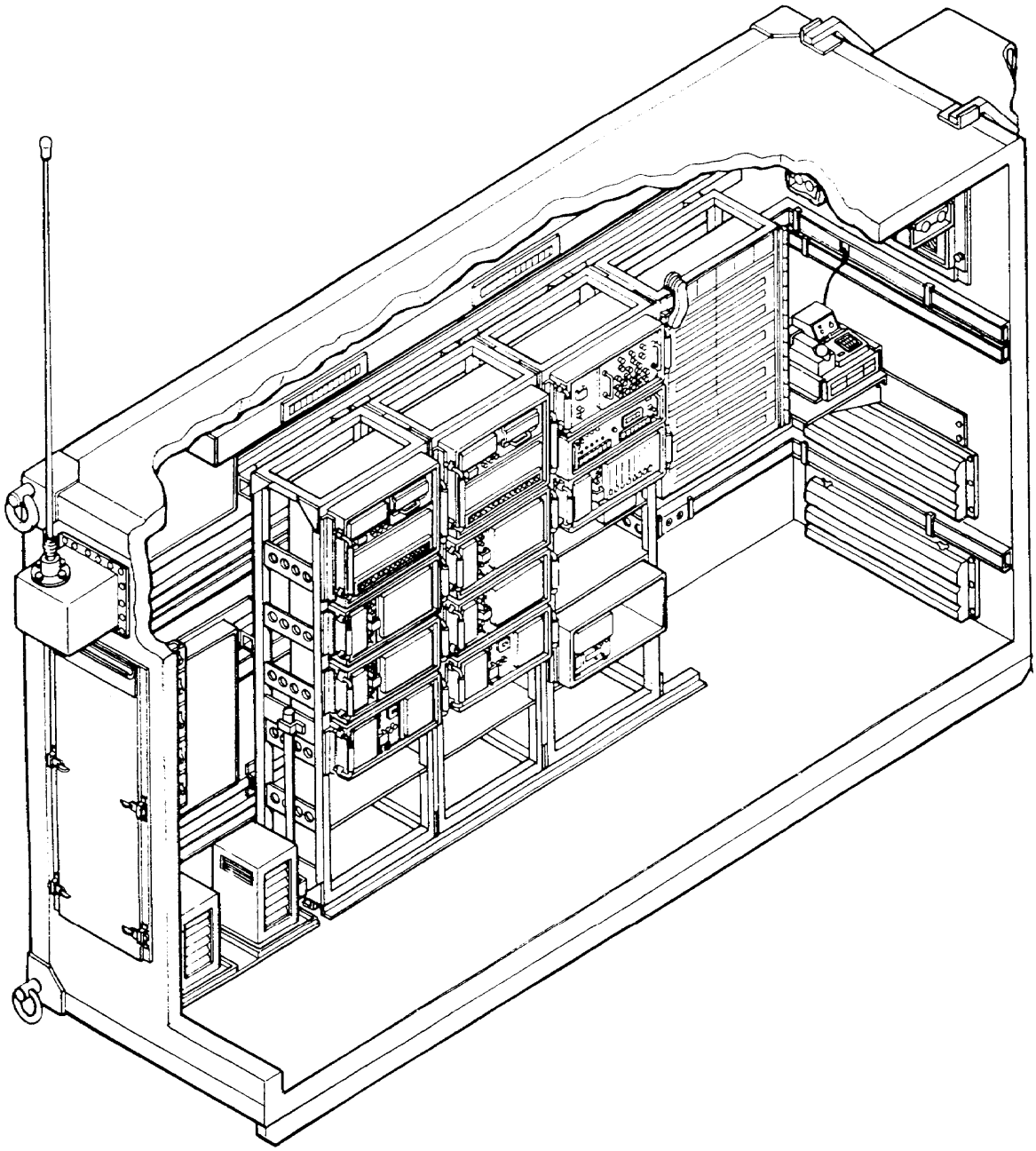

AN/TRC-175
Radio Terminal Set

Curbside

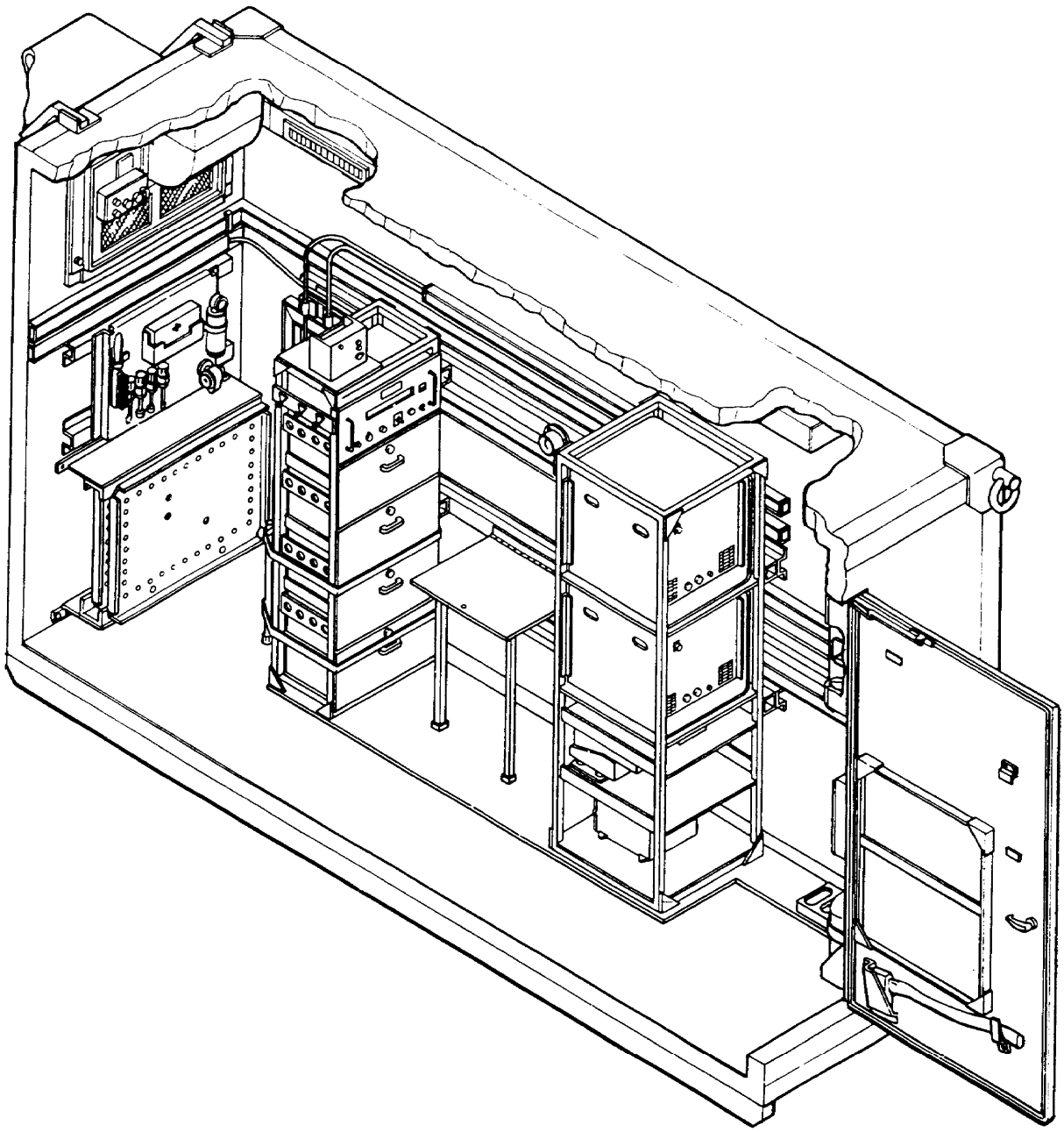

Section IV. Auxiliary Equipment

AB-1309(V)/TRC
MAST

NSN: 5985-01-156-0572

Reference: Not Available

General Information

The AB-1309(V)/TRC consists of a towable trailer and a 34-m (114-ft) nested (telescoping) tower. One to three antenna reflectors maybe mounted on top of the tower. The AB-1309(V)/TRC antenna mast trailer also has two 10-kW generators providing power for the tower and supported assemblage. The AB-1309(V)/TRC can be used to support the AN/TRC-173/174/175/138A DGM assemblages.

Major Components

Telescoping Tower (114 ft)
Antenna Reflector (stored position)
Hydraulic Controls
Towable Trailer
Batteries
Power Distribution Box
Generator Set MEP-003A
Control Box
Guy Cable Reels

Technical Characteristics

Height Extended . . . . . 34 m(114ft)
Number of Sections 7
On Board Power . . . . . 10 kW generator

AB-1309(V)/TRC
Mast

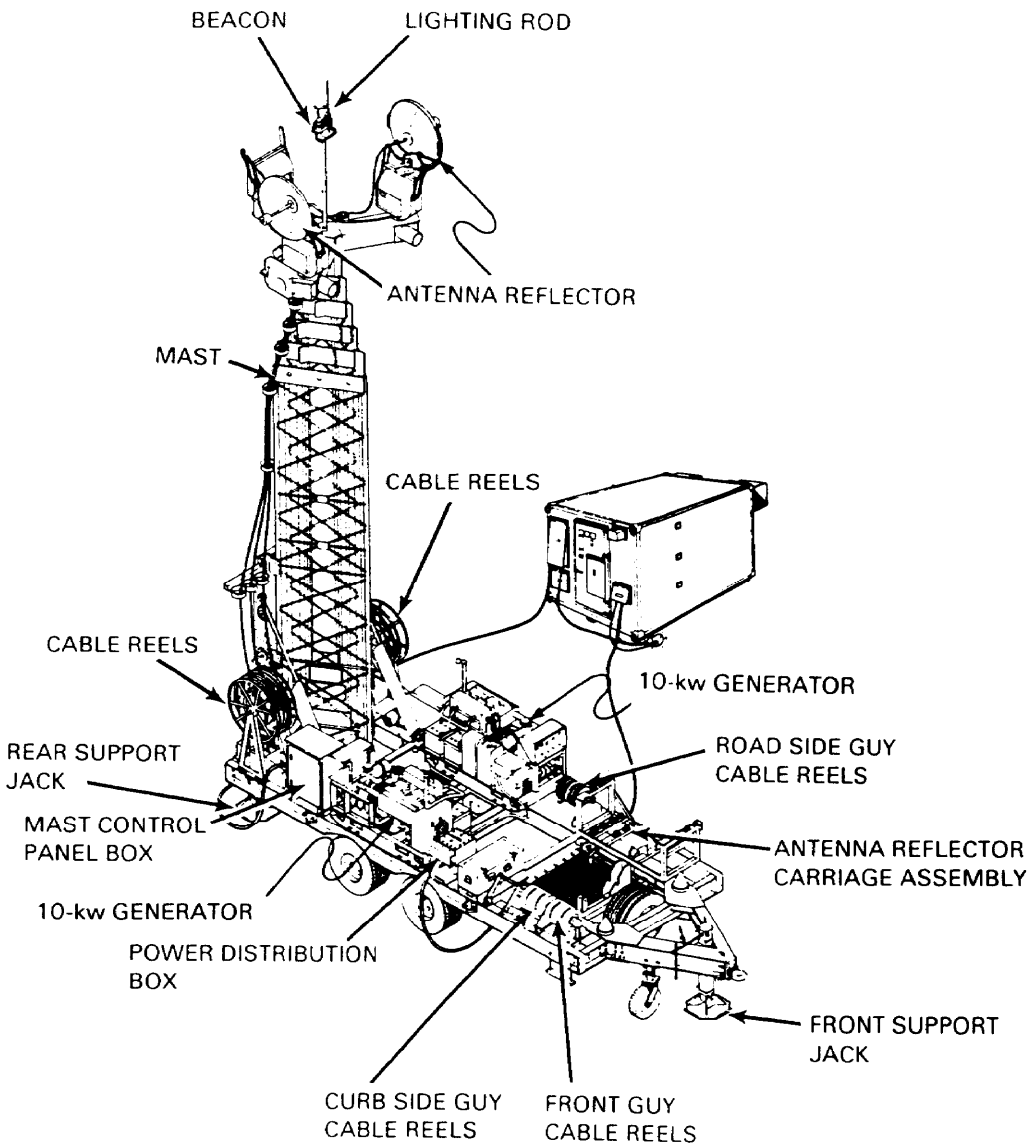

Section V. Multichannel Satellite Communication Terminals

General Information

Satellite communications (SATCOM) systems have been used since 1967 to provide vital communications service to United States forces throughout the world. SATCOM has advantages which are not found in other systems:

• SATCOM can provide reliable service without gaps in range or need for more than one ground relay station.

• The SATCOM site does not have to be situated on high terrain or within LOS of the distant terminal.

• SATCOM can provide thousands of voice and data channels originating at many ground terminals simultaneously.

• SATCOM is multimodal. The ground station can transmit and receive numerous RF carriers simultaneously. Each carrier may be independent in source and in distribution from other carriers.

• Set-up time for a new terminal, tactical or contingency, is very fast. Often, within one-half of an hour of arrival at a site, the terminal will be fully operational and communicating.

SATCOM consists of ground terminals and of one or more satellites. The satellite acts essentially as a repeater in the sky. It employs a transponder which receives, amplifies, and retransmits communications signals. Although a single ground terminal can only communicate with one satellite at a time, it normally has the capability to change from one satellite to another as required. The Army is currently involved in two major SATCOM programs:

• The Defense Satellite Communications System (DSCS) program will provide global, strategic, multichannel communications to support the DCS.

• The Ground Mobile Forces (GMF) program which is designed to provide single-channel and multichannel communications for combat forces within a theater Army.

The chapter also discusses satellites and ground terminals currently in use or being developed to support the two programs discussed above.

Defense Satellite Communications System Program

The DSCS's mission is to provide global communications capability to support the National Command Authority (NCA)/Joint Chief of Staff (JCS) under the operational control of Defense Information Systems Agency (DISA). The US Army has the responsibility for the acquisitions and fielding of both ground terminals and SATCOM control equipment.

Modulation techniques include time division multiple access (TDMA), frequency division multiple access (FDMA), and spread spectrum multiple access (SSMA). Future modulation techniques will include demand assigned multiple access (DAMA).

The DSCS radio frequency portions are undergoing many upgrades to support its mission well into the 21st century. Some of the upgrades include:

• Heavy/Medium Terminal Modification: This upgrade affects the AN/FSC-78 and AN/GSC-39 terminals. These terminal's RF components will be replaced with solid state devices for the transmitters and receive amplifiers. Included will be computer monitor, test and measurement, and control of the terminal functions.

• Super High Frequency (SHF) Tri-band Range Extension Terminal (STAR-T): This developmental terminaI will replace AN/TSC-85B/93B terminals at echelons above corps (EAC). The terminal will be mounted on a HMMWV. Its primary mission is to provide multiband communications and interface with commercial and military assets (dial central and satellite); DGM; TRI-TAC terminals at EAC; and with MSE terminals and ECB.

The DSCS Operational Control System (DOCS) controls all DSCS user terminals operating on DSCS spacecraft. This system also is undergoing upgrades that will allow higher control capability using less equipment and manpower resources.

The ground mobile forces (GMF) will use the DSCS II and DSCS III spacecraft to fulfill multichannel SHF initial system worldwide operational requirements. The DSCS II and III satellites are positioned in geostationary orbits and are continuously available for use by earth terminals located within 5,000 nautical miles of their subsatellite points. The SKYNET IV satellite will be available for GMF use in Europe.

DSCS II: These satellites have two transponders, each having a bandwidth constrained by the nominal 2009 MHz bandwidth of the total usable bandwidth of 410 MHz. Each transponder is subdivided by filters in the RF diplexers to provide two operational channels, for example, four operational channels for each satellite. Four antennas are mounted on the despun platform. Two of them are earth coverage horn (ECH) antennas, one for uplink and one for downlink. The remaining two are parabolic dish type antennas. A single biconical horn is used to support the dedicated S-band telemetry and control link. It is mounted on the lower end of the spinning section of the satellite.

DSCS III: The DSCS III program is a vital part of the comprehensive plan meeting national military communications needs. A six-channel communications transponder with each channel operating through its own RF amplifier serves the users. This allows compatible grouping of users for efficient use of the SHF frequency spectrum of 7.9 to 8.4 GHz. The DSCS III satellite carries two communications payload packages. The primary payload is at SHF, satisfying the space link requirements of standard military communications networks. The secondary payload is an US Air Force SATCOM UHF single transponder used to transmit emergency action messages between military command posts (CPs) and force elements. The communications system is supported by one receive multibeam antenna (MBA), two receive ECH antennas, two transmit MBA's, two transmit ECH antennas, and a gimballed dish antenna (GDA). Each of the six independent repeaters operates in the SHF region to relay telephone, data, wideband imagery, and secure digital voice signals using FM, BPSK, quadrature phase shift keying (QPSK), staggered quadrature phase shift keying (SQPSK) and frequency hopping pseudo noise (PN) spread spectrum modulation. Each terminal has access to any channel and each channel can relay, with minimum performance degradation, signal transmissions consisting of FDMA, TDMA, and spread spectrum multiple access (SSMA) via the PN carrier modulation technique. Linear, quasi linear, and saturated modes of operation are provided by means of selectable gain steps. The MBA with the beam forming the network can shape antenna patterns to arbitrary selected coverage areas.

DSCS Phase II Satellite

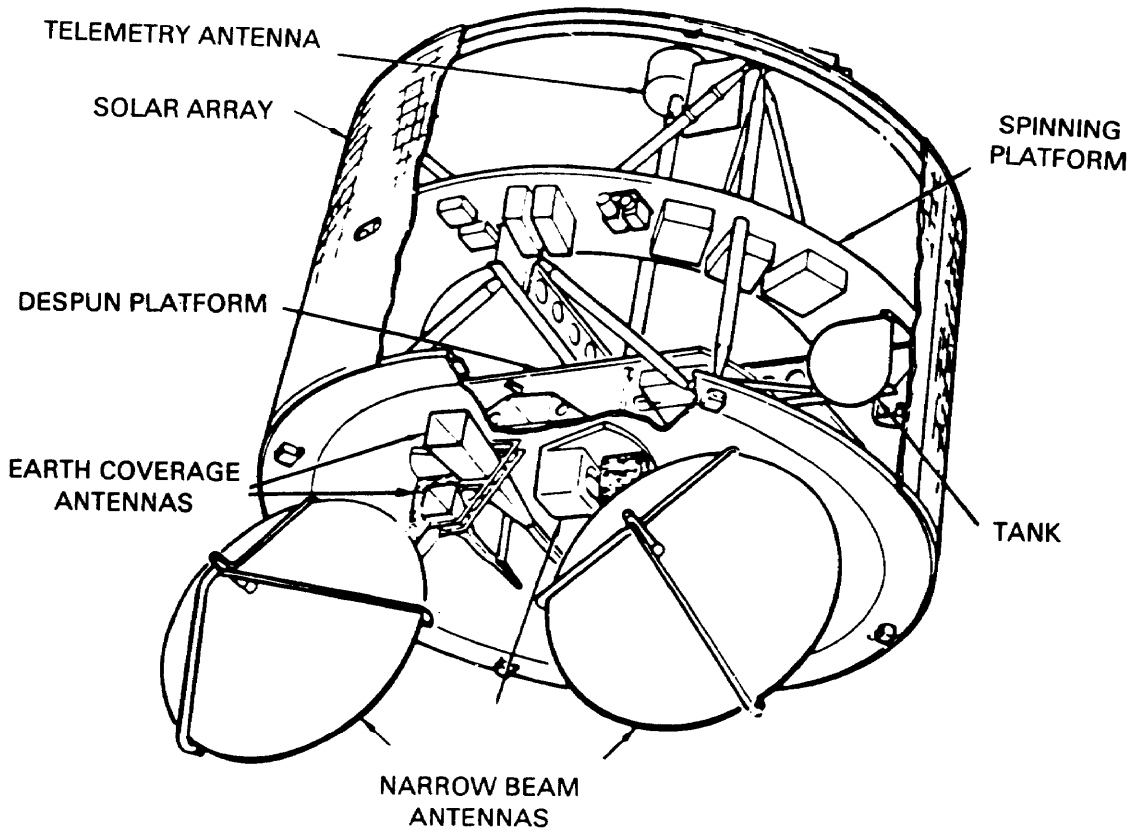

DSCS Phase III Satellite

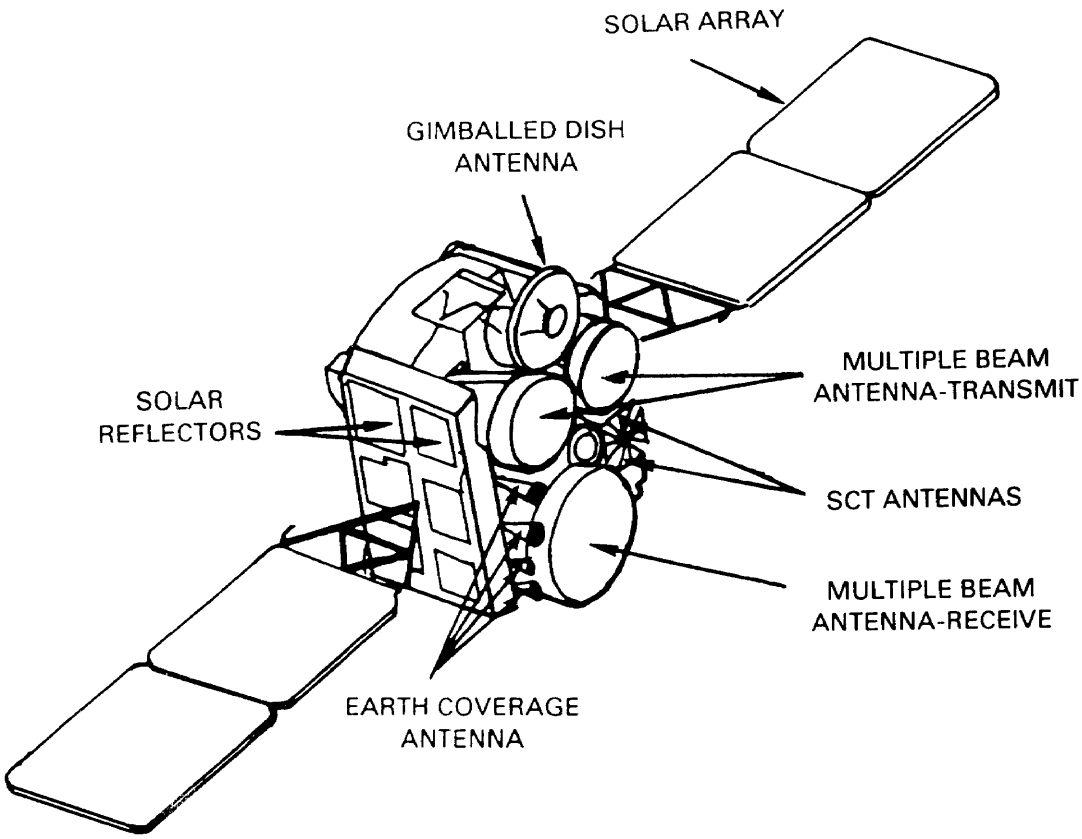

AN/FSC-9
Satellite Communications Terminal

NSN: To be determined

Reference: To be determined

General Information

The AN/FSC-9 terminals have been used since the earliest days of military SATCOM. Two of these terminals were built and much of the research leading to the development of all present SATCOM systems (commercial and military) was conducted using these two terminals. The AN/FSC-9 terminal at Camp Roberts, California, is the only AN/FSC-9 terminal in operation and provides communications via satellite from the Pacific area to the continental United States (CONUS).

Technical Characteristics

Type of Service . . . . . 500000KF9W (multilink, multivoice, and data)
Frequency Range:
Transmit . . . . . 7.9 to 8.4 GHz
Receive . . . . . 7.25 to 7.75 GHz
Planning Range . . . . . 16.093 km (10,000 mi)
Power Input . . . . . 115/230 V AC, 50 to 60 Hz
Power Source . . . . . Any appropriate AC power source
Power Output . . . . . Up to 20 kW
Antenna System . . . . . Paraboloid surface, 18.29 m (60 ft) in diameter, weight 172.3 MT (190 t)

AN/FSC-9
Satellite Communications Terminal

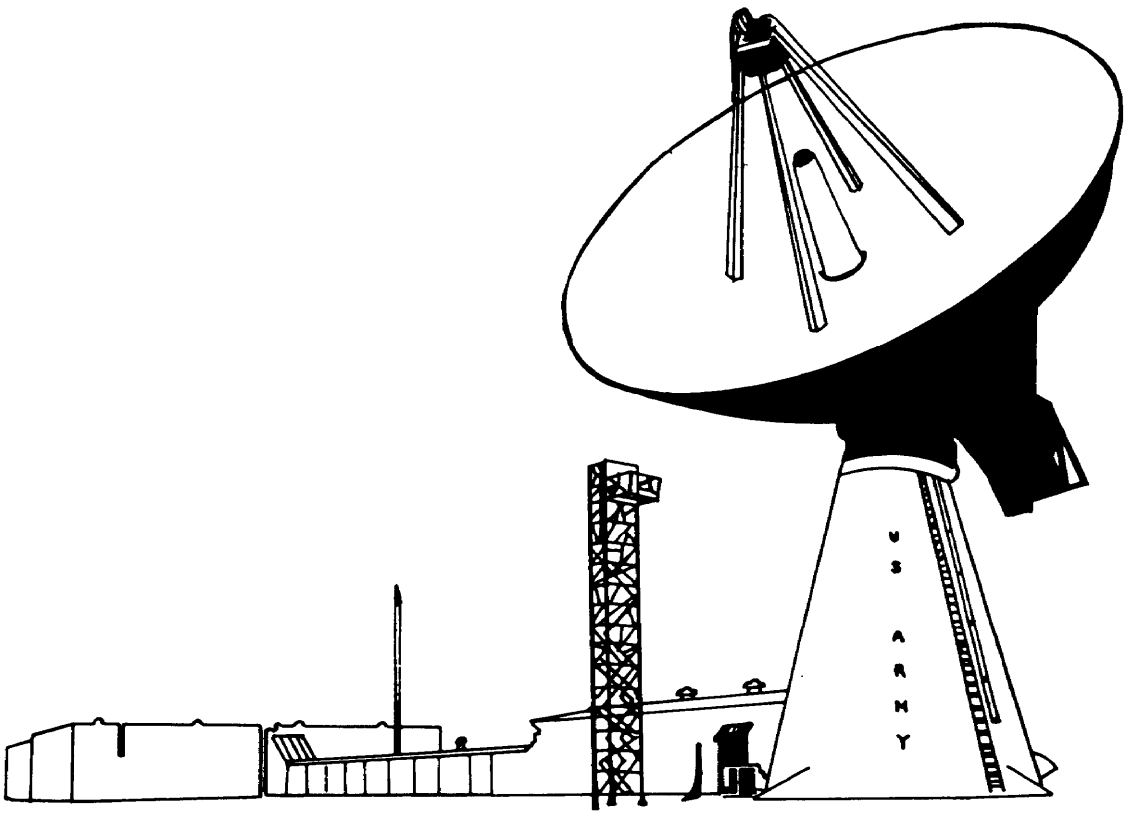

AN/FSC-78 and AN/GSC-39
Satellite Communications Terminals

NSN: 5895-01-007-9401 (AN/FSC-78)
5895-01-070-5685 (AN/GSC-39(V)1)
5895-01-077-6249 (AN/GSC-39(V)2)

Reference: TM 11-5895-1050-12
TM 11-5895-1043-12

General Information

The AN/FSC-78 has an 18.29-m (60-ft) parabolic antenna and can transmit up to nine carriers and receive 18 carriers. The components of the AN/FSC-78 are installed in an associated electronic equipment building. This terminal was designed for fixed station application only. The AN/GSC-39 differs from the AN/FSC-78 only in using an 11.6-m (38-ft) diameter, DE-222/G, parabolic dish.

Technical Characteristics

Type of Service ..... 500000KF9W (multilink, multivoice, and data)
Frequency Range:
Transmit ..... 7.9 to 8.4 GHz
Receive ..... 7.25 to 7.75 GHz
Planning Range ..... 16,093 km (10,000 mi)
Power Input ..... 115/230 V AC, 50 to 60 Hz
Power Source ..... Commercial power and two 500 kW back-up generators using UPS technology
Power Output ..... 10 kW max
Antenna System ..... Parabolic, 18.29-rn (60-ft) diameter

AN/FSC-78
Satellite Communications Terminal

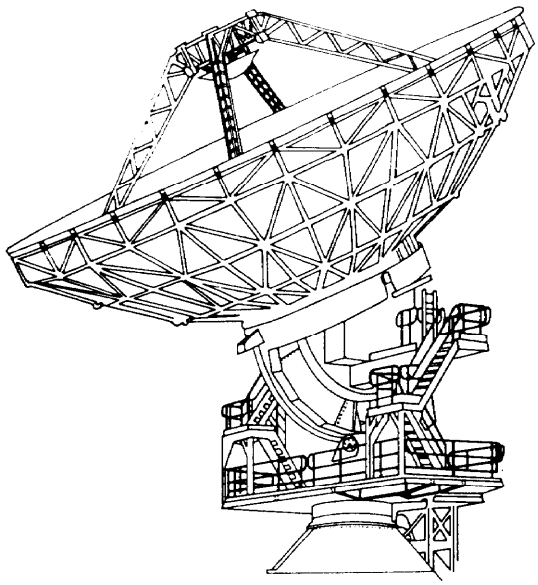

AN/GSC-39
Satellite Communications Terminal

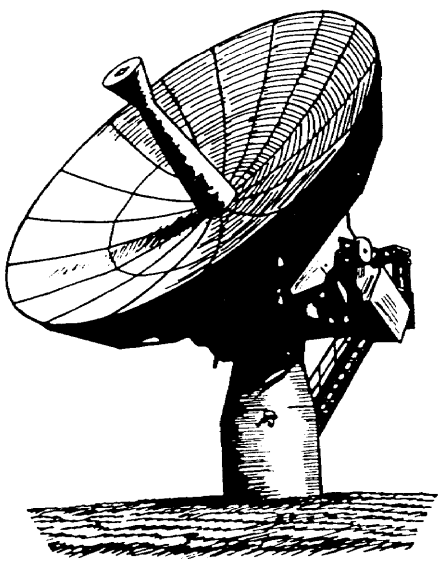

AN/GSC-40(V) and AN/MSC-64(V) Special Communications Systems

NSN: 5895-01-088-9270 (AN/GSC-40)
5895-01-146-3875 (AN/GSC-40A(V)1)
5895-01-146-3874 (AN/GSC-40A(V)2)
5895-01-112-5836 (AN/MSC-64(V)1)
5895-01-088-2769 (AN/MSC-64(V)2)
5895-01-112-5838 (AN/MSC-64(V)3)

Reference: TM 11-5895 -1104-10-1 (AN/MSC-64(V))
TM 11-5895 -1104-10-2 (AN/MSC-64(V))

General Information

The Special Communications System (SCS) is a UHF SATCOM system operated and maintained by the Army, Navy, and Air Force and consists of SATCOM Terminals AN/GSC-40, AN/GSC-40A(V) and AN/MSC-64(V). The terminals are normally deployed in a network configuration. The AN/GSC-40, AN/GSC-40A(V)1, and AN/GSC-40A(V)2 are CP terminals configured to provide the specific SCS network command and control functions and the means for disseminating highly specialized critical user information. The AN/MSC-64(V) is referred to as the mobile terminal since it predominately supports users requiring rapid redeployment.

Technical Characteristics

AN/GSC-40/40A(V):

Frequency Range . . . . . 225 to 400 MHz
Security Device . . . . . one TSEC/KG-31
two TSEC/KG-34s
three TSEC/KN-2s
Power Input . . . . . 115/230 V AC, 50/60Hz
Power Output . . . . . 100 W
Antenna . . . . . AN/GSC-40: two high-gain AS-3060/G
AN/GSC-40A(V)1/2: four high-gain AS-3060/G

AN/MSC-64(V):

Type of Service . . . . . UHF half-duplex AFSAT mode (includes TDM 3, TDM 1/2, and random modes of operation)
Frequency Range . . . . . 225 to 399.975 MHz
Number of Channels 7,000

Technical Characteristics (Cont.)

Security Device TSEC/KN-2
Power Input ..... Mobile, 28 V DC at 100 amp; stationary, 115/230 V AC, 50/60 Hz at 10 kw
Power Output ..... 10 to 100 W
Antenna ..... Low-gain AS-3439/G, omnidirectional high-gain AS-3438/G, directional
Weight ..... 1,697 kg (3,738 lb) (approximately)

AN/GSC-40(V) Special Communications System

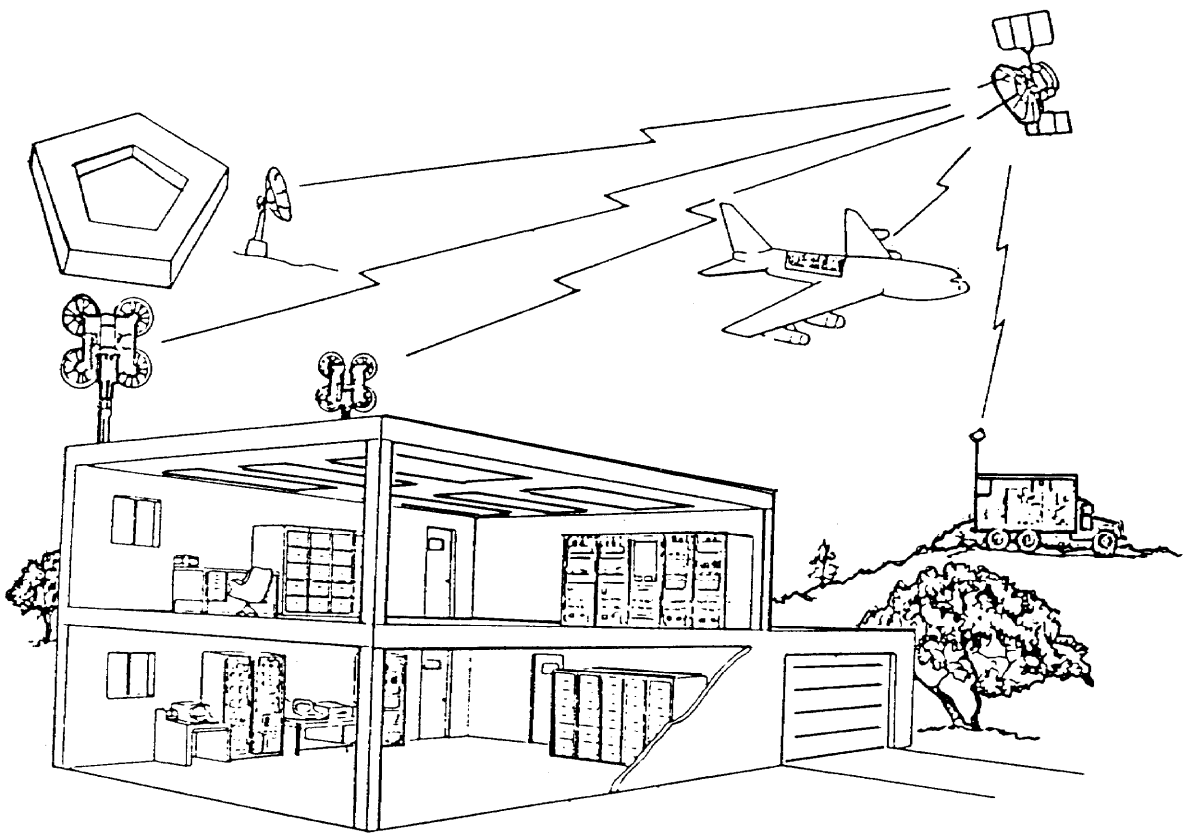

TYPICAL SCS NET CONFIGURATION

SCS Functional Block Diagram

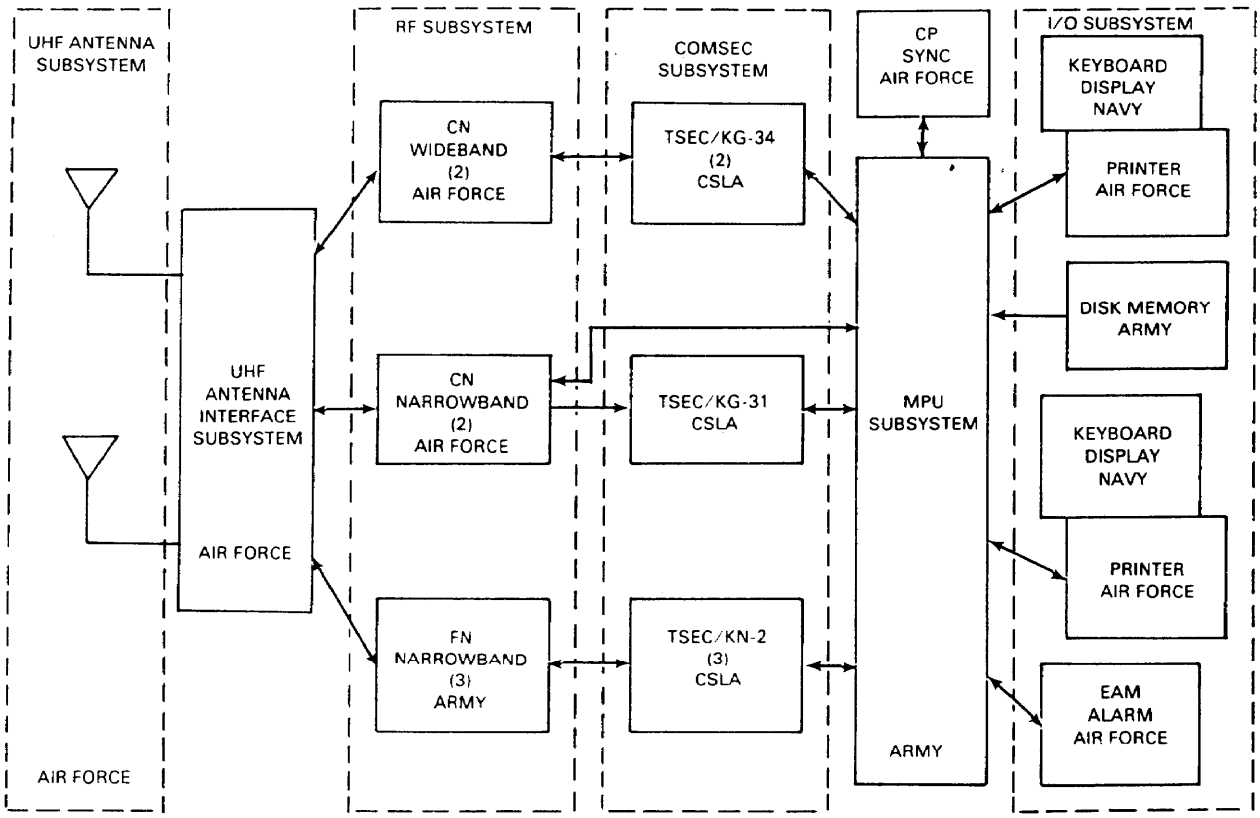

AN/MSC-64(V)
Satellite Communications Terminal

Roadside

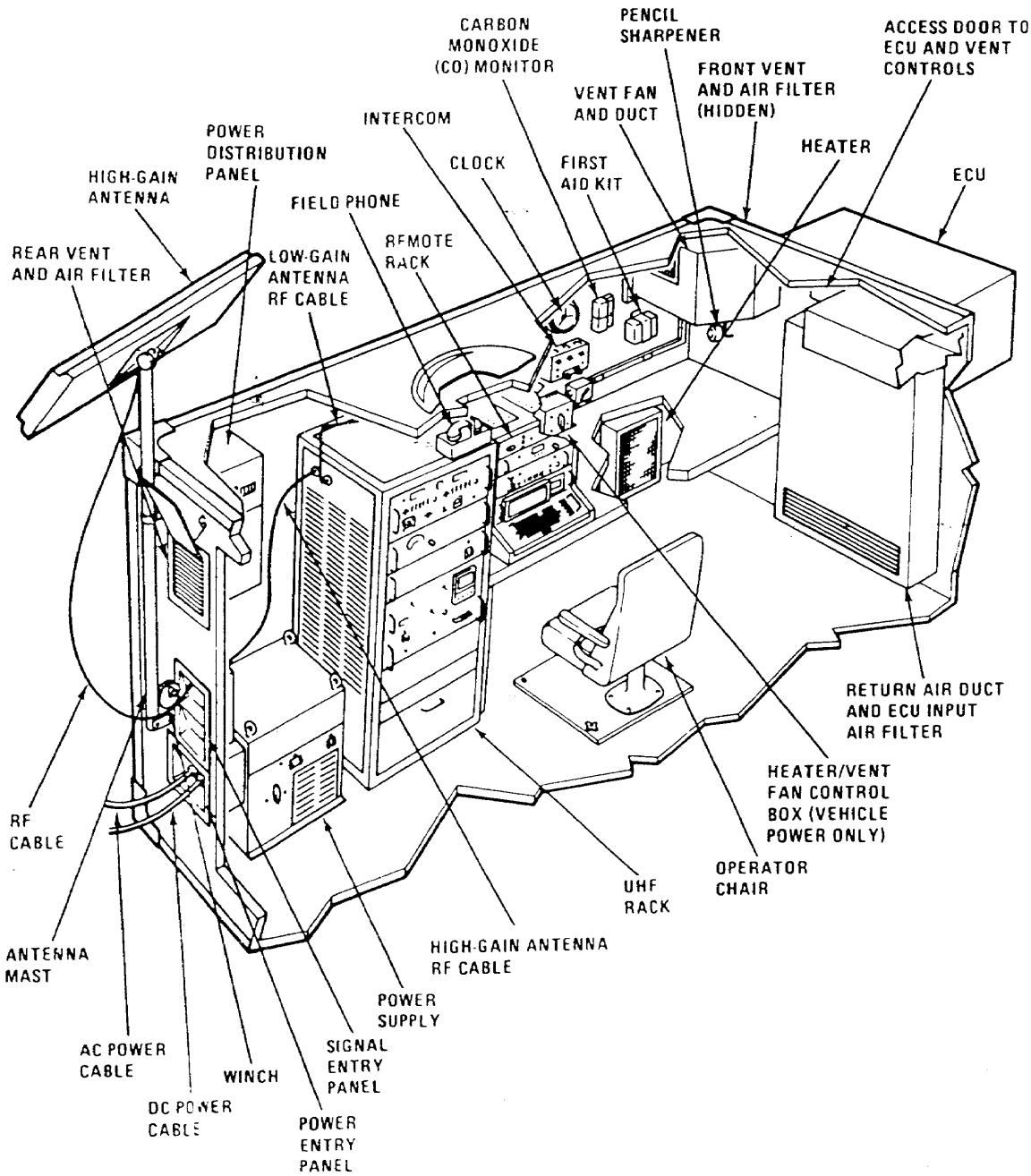

AN/MSC-64(V)
Satellite Communications System

Curbside

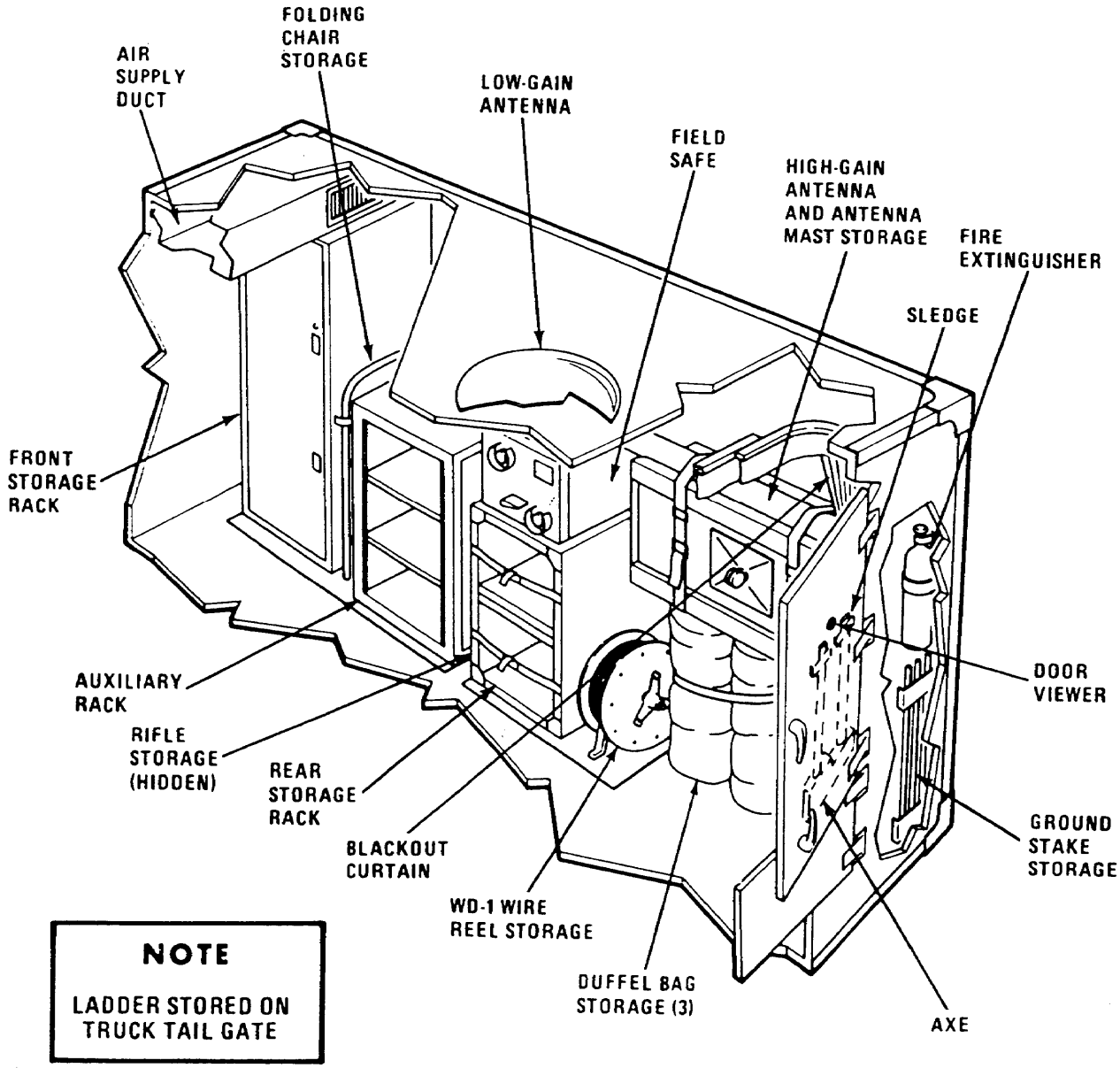

NOTE

LADDER STORED ON TRUCK TAIL GATE

AN/GSC-49
Jam-Resistant Satellite Communications Terminal

NSN: 5895-01-126-9198 (AN/GSC-49(V)1)
5895-01-121-9558 (AN/GSC-49(V)2)
5895-01-355-8167 (AN/GSC-49(V)3)

Reference: TM 11-5895-1162-10

General Information

The AN/GSC-49 SATCOM terminal provides jam-resistant secure communications. The terminals are provided in either a fixed or transportable configuration. All transportable terminals can be transported by truck, railroad, ship, and fixed- and rotary-wing aircraft. The terminals are designed specifically to support the Worldwide Military Command and Control System, jam-resistant secure communications point to point, secure voice and graphics conferencing, and Air Force tactical warning and attack assessment data transmission requirement.

Technical Characteristics

Type of Service . . . . . 50000KF9W (single-channel voice and FSK)
Frequency Range:
Transmit . . . . . 7.29 to 8.4 GHz
Receive . . . . . 7.25 to 7.775 GHG z
Planning Range . . . . . 6,093 km (10,000 mi)
Power Input . . . . . 120/208 V AC, 50/60 Hz
Power Source . . . . . Two generators (30 kW)
Power Output . . . . . 3.2 kW max
Antenna System . . . . . One quick-reaction, 8-ft parabolic
One 20-ft parabolic that can transmit multiple carriers
Set-up Time . . . . . Approximately 1 hour to satellite acquisition
with small antenna: within 12 hours for large dish

AN/GSC-49
Jam-Resistant Satellite Communications Terminal

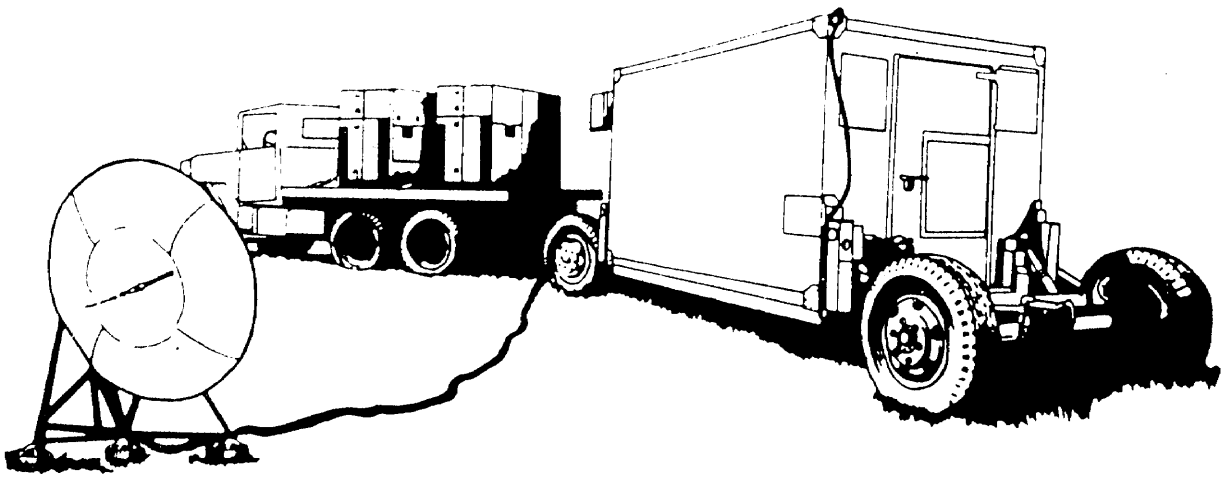

AN/GSC-52
Medium Satellite Communications Terminal

NSN: 5895-01-168-9607 (AN/GSC-52(V)1)
5895-01-174-0272 (AN/GSC-52(V)2)

Reference: TM 11-5894-1196-13-1
TM 11-5894-1197-13-1

General Information

The AN/GSC-52 is a high-capacity, SHF SATCOM system capable of simultaneous transmission/reception of up to 18 transmit and receive carriers. Each carrier can accommodate CW, pulse modulated (PM), FM, FDMA or SSMA signals. The terminals are provided in either a fixed or mobile configuration.

Technical Characteristics

Frequency Range:
Transmit . . . . . 7.9to 8.4 GHz
Receive . . . . . 7.25 to 7.75 GHz
Power input . . . . . 120/208 V AC 50/60 HZ
Power Source . . . . . Commercial or two 50kW backup generators using UPS technology
Power output . . . . . 1 kw
Antenna System . . . . . Parabolic 11.6 m (38 ft) in diameter OE-371/G Antenna

AN/GSC-52
Medium Satellite Communications Terminal

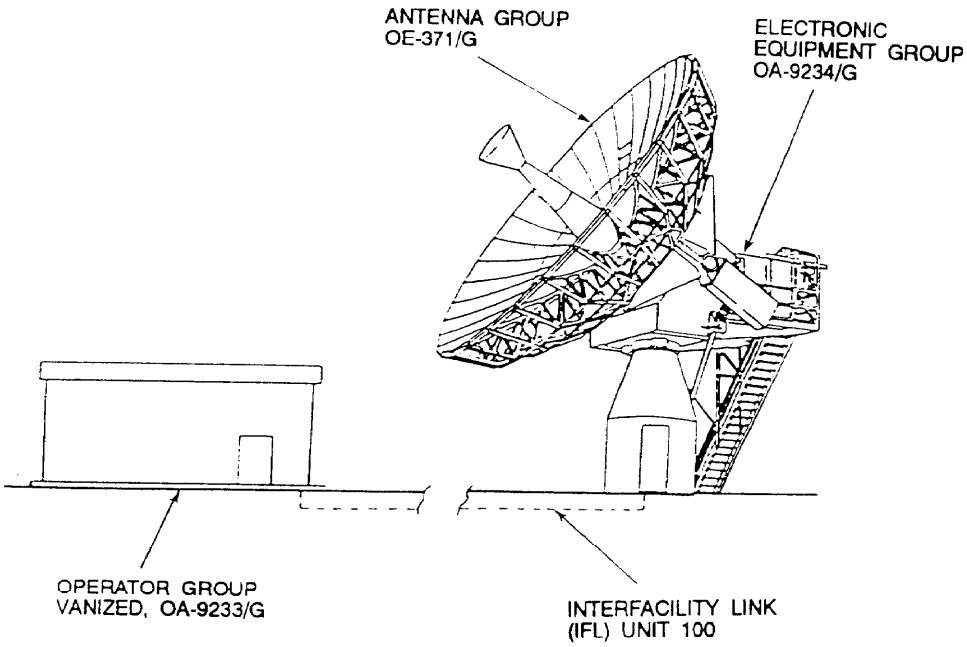

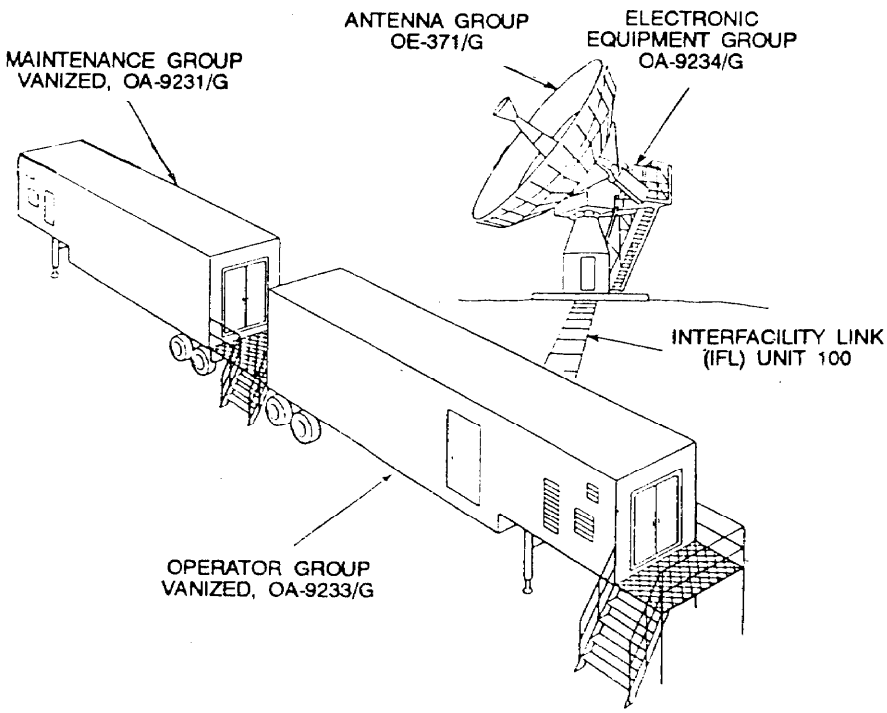

AN/MSC-46
Satellite Communications Terminal

NSN: 5895-00-999-7317

Reference: TM 11-5895-826-14

General Information

The AN/MSC-46 is the first satellite terminal specifically designed for a military SATCOM system. It is completely air transportable in three C-130 cargo aircraft. The total terminal weight is 56.7 MT (62.5 t) and requires site preparation prior to installation and use. The terminal operates via the DSCS satellite with a compatible ground terminal to provide multilink, multivoice, and data channel service.

Technical Characteristics

Type of Service	500000KF9W (multilink, multivoice, and data) on low power amplifier 125000KF9W on high power amplifier
Frequency Range:	
Transmit	7.9 to 8.4 GHz
Receive	7.25 to 7.75 GHz
Planning Range	16,093 km (10,000 mi)
Power Input	120/208 V AC, 50/60 Hz, three phase
Power Source	Uses three generator sets (100 kW) to supply the required 175 kW (50% backup) or two generator sets (500 kw)
Power Output	5 kW
Antenna System	Parabolic, 12.19m (40 ft) in diameter, in either an inflatable or rigid radome

AN/MSC-46
Satellite Communications Terminal

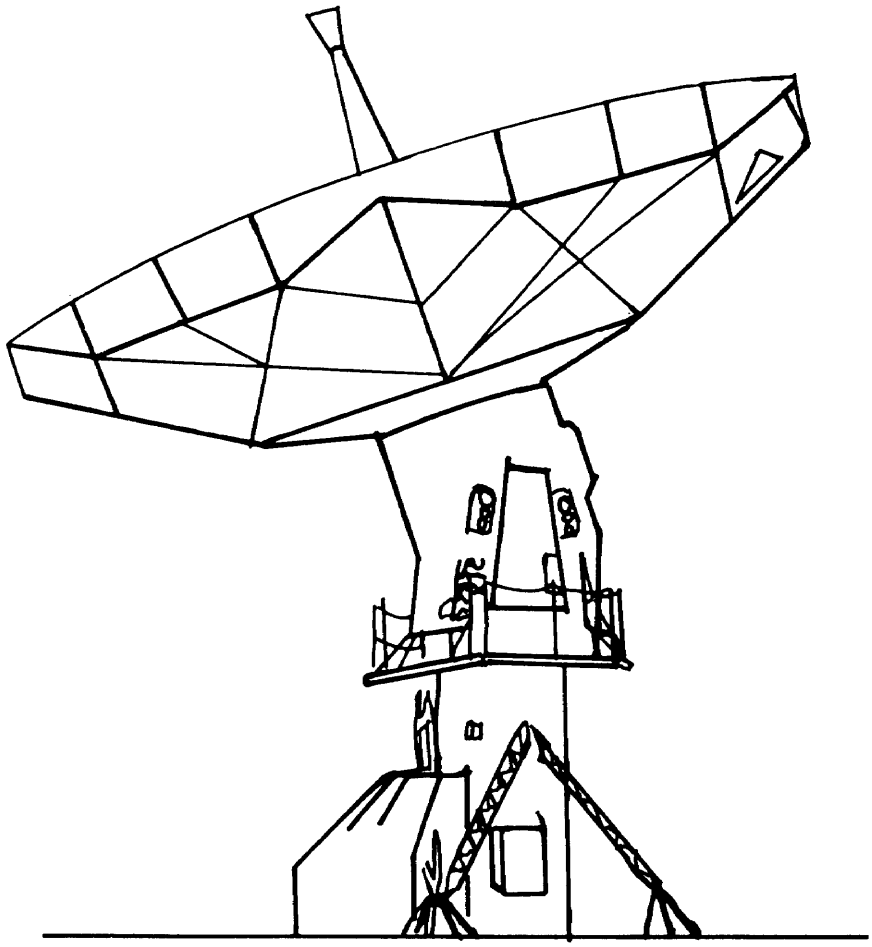

AN/MSQ-114
Satellite Communications Control

NSN: 5895-01-102-6307

Reference: TM 11-5895-1136-10

General Information

The AN/MSQ-114 is part of the GMF Satellite Communications Control System which is used to manage the satellite communication capability assigned to the satellite terminals operating within the tactical network. The primary function of the AN/MSQ-114 is to continuously monitor the transmission of the communications satellite to assure that all GMF network terminals are operating within the proper limits of frequency, power output, and bandwidth.

Technical Characteristics

Type of Service . . . . . Orderwire communications with all network terminals for control and monitoring of terminals
Frequency Range:
Transmit . . . . . 7.9to 8.4 GHz
Receive . . . . . 7.25 to 7.75 GHz
Power Input . . . . . 120/208 V AC, 50/60 HZ
Power Source . . . . . two generators (60 kw)
Power Output . . . . . 400 W max
Antenna System . . . . . 120-ft parabolic
Set-up Time . . . . . 24 hours

AN/MSQ-114
Satellite Communications Control

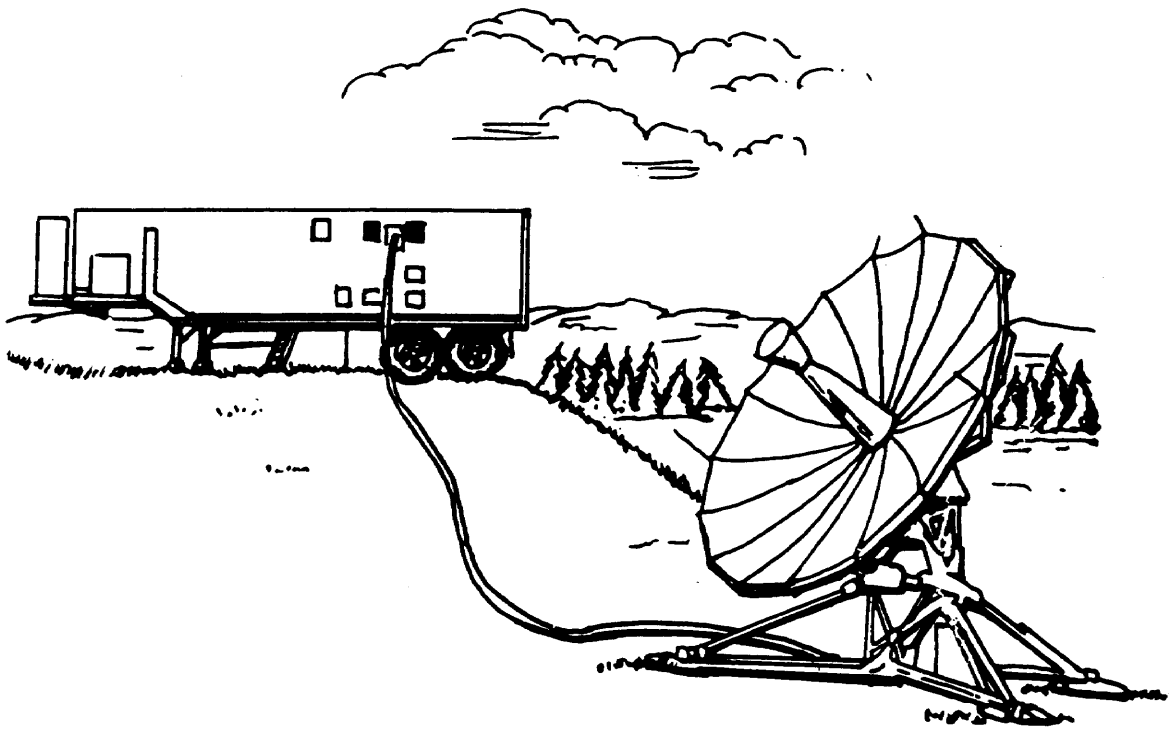

AN/TSC-54
Satellite Communications Terminal

NSN: 5895-00-937-4993

Reference: TM 11-5895-389-12

General Information

The AN/TSC-54 is a satellite terminal originally designed for quick-reaction use with a military SATCOM system. It is completely transportable in two C-130 cargo aircraft. The AN/TSC-54 requires only a few hours for assembly, installation, and the initiation of operations. Terminal elements break down into packages, none weighing more than 2.7 MT (3 t), for helicopter airlift; total weight is 10.2 MT (11.2 t). The terminal also is usable in a fixed mode and uses additional multiplexing equipment in this mode. The AN/TSC-54 is considered obsolete as a mobile terminal.

Technical Characteristics

Type of Service . . . . . 50000KF9W (single-channel voice and FSK for tactical mode strategic mode has capabilities similar to the AN/TSC-86

Frequency Range:
- Transmit . . . . . 7.9 to 8.4 GHz
- Receive . . . . . 7.25 to7.75 GHz

Planning Range . . . . . 16,093 km (10,000 mi)

Power Input . . . . . 1 20 V AC, 400 Hz

Power Output . . . . . 5 kW

Antenna System . . . . . Cloverleaf made up of four individual parabolic surfaces 3.05 m (10 ft) in diameter

AN/TSC-54
Satellite Communications Terminal

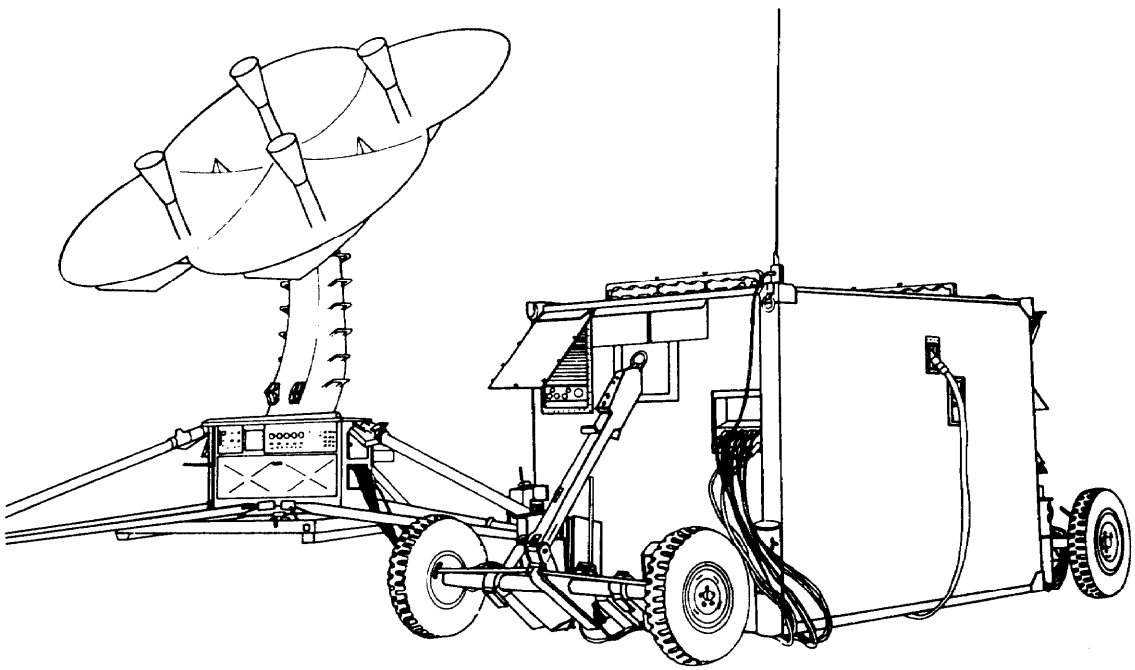

AN/TSC-85A, AN/TSC-85B(V)l and AN/TSC-85B(V)2 Satellite Communications Terminals

NSN: 5895-01-113-5343 (AN/TSC-85A
5895-01-284-8308 (AN/TSC-85B)

Reference: TM 11-5895-845-14 (AN/TSC-85(V)2)

General Information

The AN/TSC-85 contains equipment to receive, transmit, and process low, medium and high capacity multiplexed voice, data, and teletypewriter signals. Using encryption devices, they will process secure and nonsecure traffic. The terminals are intended for either point-to-point or multipoint operation in tactical communications systems. They can transmit one and receive Up to four high data rate carriers. The AN/TSC-85(V)2 requires an external multiplex shelter to terminate the circuits. The AN/TSC-85A has its own multiplex equipment in the shelter, however, it may use an external multiplex shelter (for 96-channel capability) if the mission requires it. The terminals include modulation and demodulation equipment and a specialized PCM signal processor. The terminals have external connections for an intercommunications set, field telephones, wideband 70 MHz, and chemical, biological, radiological (CBR) alarm.

Major Components

	85A	85(V)2
Receiver-Transmitter Orderwire RT-1287/TSC	1	1
Radio Frequency Amplifier AM-6701/TSC	2	2
Power Supply PP-7086/TSC		2
Power Supply PP-7712(V)2/TSC	2	
Frequency Converter CV-3198A/TSC	2	2
Multiplexer/Demultiplexer Tactical Satellite Signal Processor (TSSP) TD-1147/TSC		2
Multiplexer/Demultiplexer TSSP TD-1337/(V)1/G		2
Frequency Converter CV-3201/TSC	6	5
Digital Data Modem MD-945/TSC	5	5
Telephone Set TA-312/PT	1	1
Intercommunications Station LS-147F/FI 1	1	
Antenna AS-3036A/TSC	1	1
Antenna Control C-10237/TSC	1	
Antenna Control C-10348/TSC		1

Major Components (Cont.)

	85A	85(V)2
Multiplexer TD-1069/G (not basic issue)	4	
Security Device TSEC/KG-27 (not basic issue)	4	
Echo Suppressor MX-9635A/TSC	4	
Fault Alarm BZ-236A/TSC	1	1
Multiplexer TD-660B/G	4	
High Speed Data Buffer TD-1065	4	
Group Modem MD-1026	1	
Telephone Signal Converter CV-1548A/G	4	
Shelter S-250		
Shelter S-280	1	

Technical Characteristics

Frequency Range:
- Receive . . . . . 7250 to 7750 MHz
- Transmit . . . . . 7900 to 8400 MHz

Power Output . . . . . 500 W (nominal) at antenna

Operation:
- Single Channel (digital voice) . . . . . 16/32 kb/s
- Multichannel . . . . . 6, 12, 24, 18-96 channels (48 kb/s per channel at true multiplex data rates)

Power Requirements:
- AN/TSC-85(V)2 . . . . . 115 V AC 10%, 50/60 Hz, single phase
- AN/TSC-85A . . . . . V AC 10%, 50/60 Hz, 3-phase, 5-wire

NOTE: Major Technical Characteristics exist between Satellite Communications Terminals AN/TSC-85B(V)1 and AN/TSC-85B(V)2. Consult TM 11-5895-1433-12-1 for additional information.

AN/TSC-85A
Satellite Communications Terminal

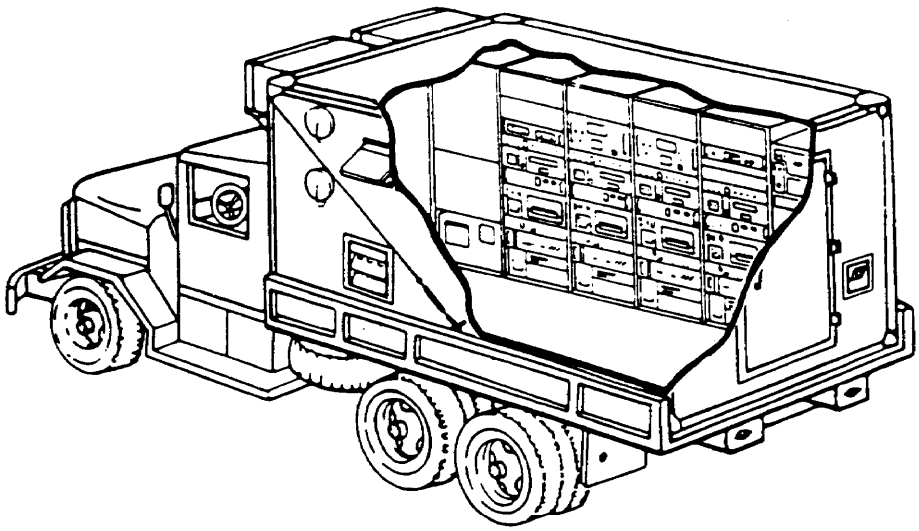

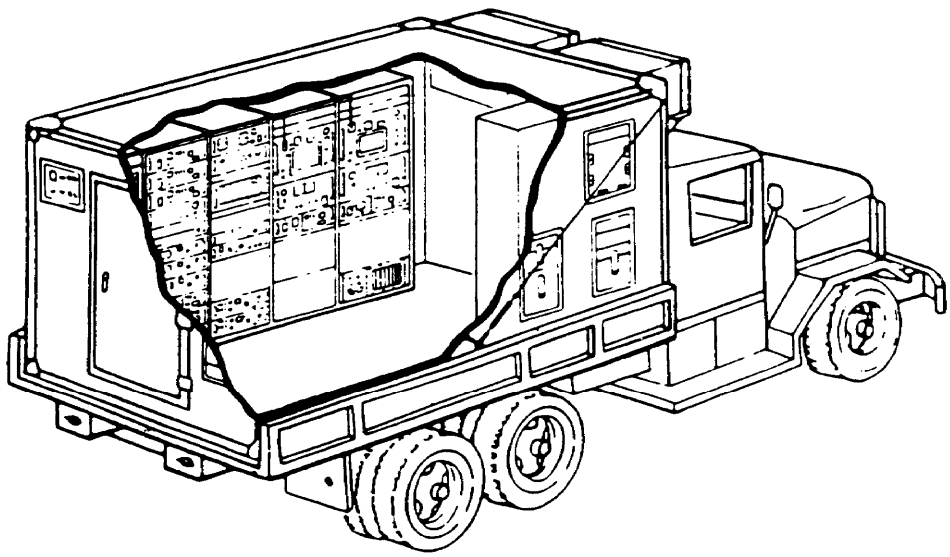

AN/TSC-85(V)2
Satellite Communications Terminal

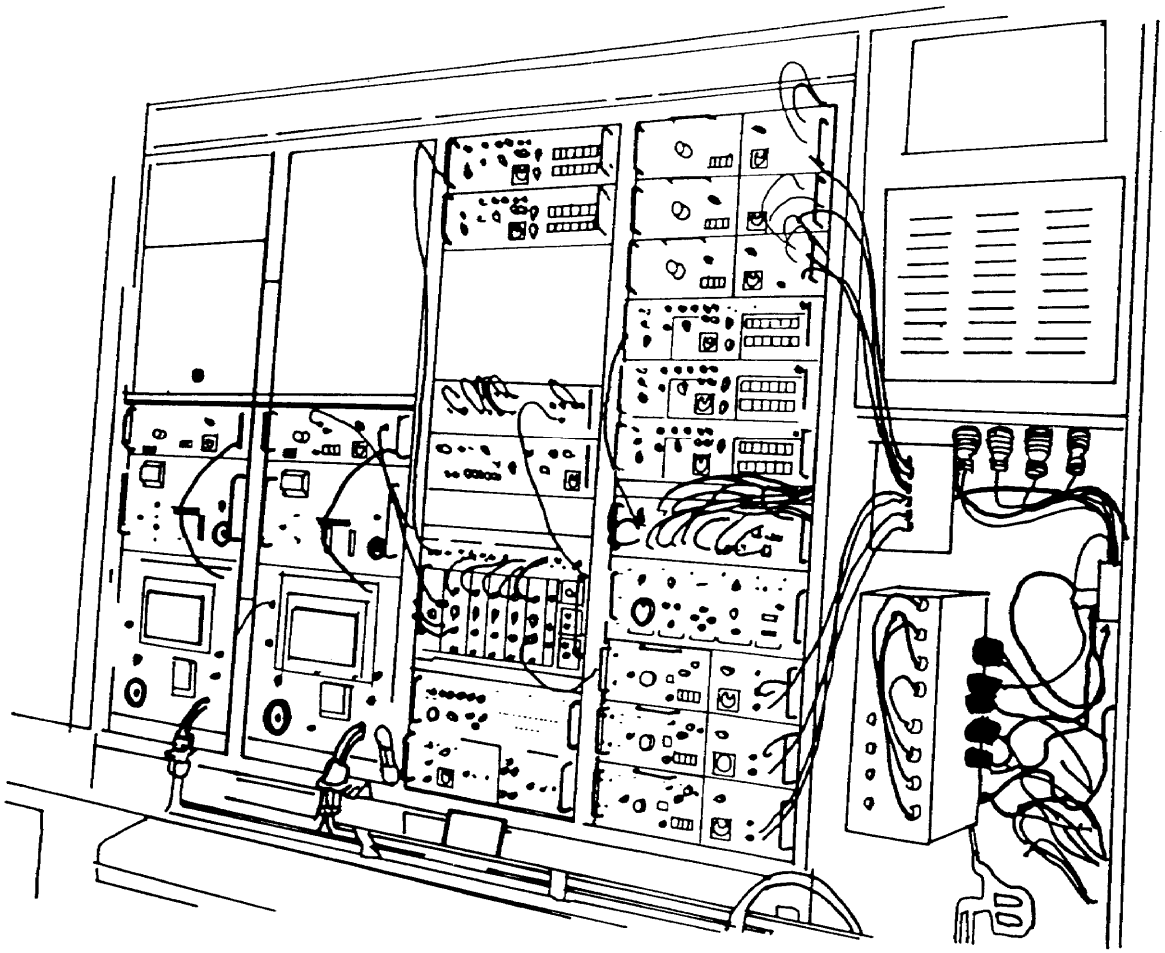

ROADSIDE WALL

AN/TSC-85(V)2
Satellite Communications Terminal (Cont.)

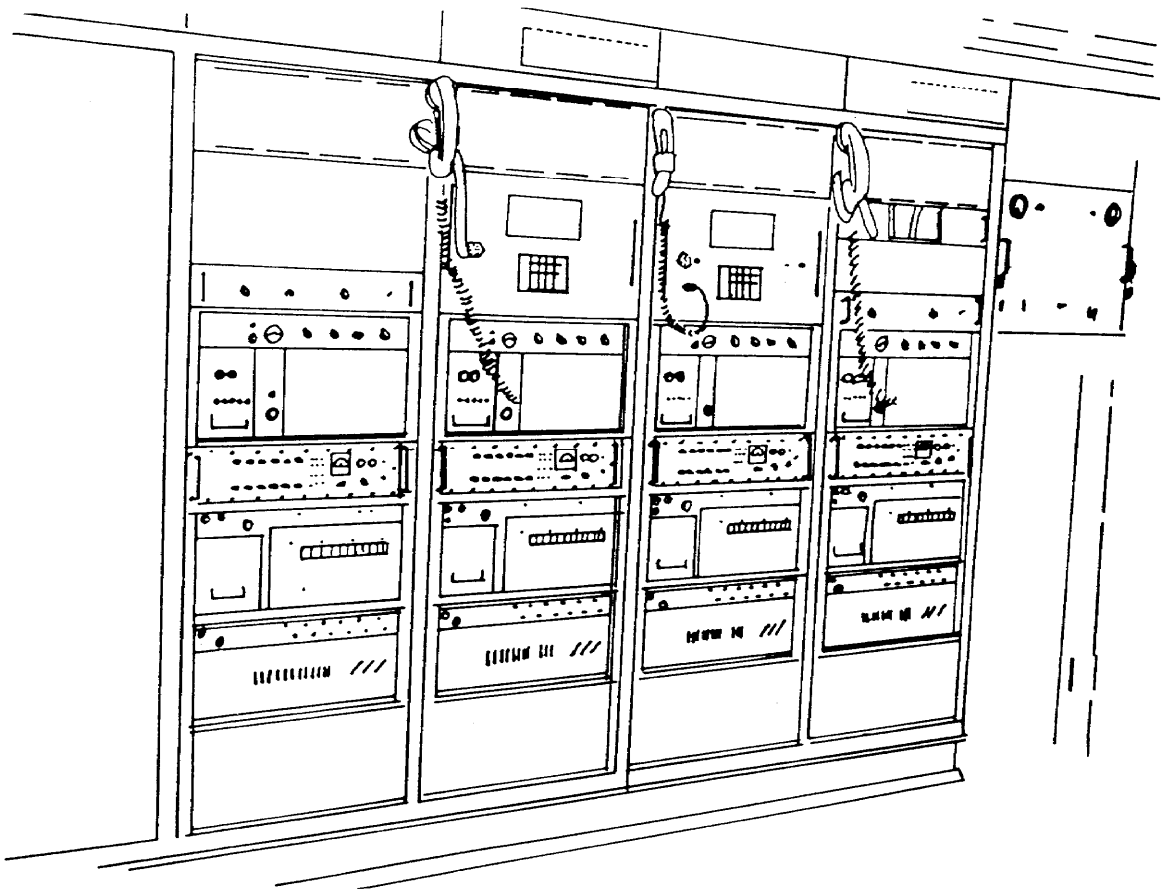

CURBSIDE WALL

AN/TSC-86
Satellite Communications Terminal

NSN: 5895-01-083-6891
5895-01-051-9427

Reference: 11-5895-846-14

General Information

The AN/TSC-86 can provide simultaneous communications with up to four other terminals. Included in the terminal is modulation, demodulation, multiplexing, and signal conditioning equipment necessary for processing multiple, medium-, wideband-digital voice, data, and teletype signals. The electronics are housed in an S-280 shelter with mobilizer. A power pallet containing two 30 kW generators is employed as part of the terminal. The terminal also consists of two antenna groups: the 8-ft group, AS-3036 and the 20-ft group, AS-3199.

The communications subsystem accepts VF, teletypewriter, and baseband digital signals from external cable transmission networks and combines them with on board teletype and voice orderwire signals to form a composite, multiplexed, digital signal called the mission bit stream. This bit stream is applied to a bulk encryption device before routing to the digital data modem by the modulated 70-MHz panel for conversion to SHF and transmission. Received signals are processed in a similar manner, except in the reverse order.

Technical Characteristics

Type of Service	Multichannel
Frequency Range:	
Transmit	7.25 to 8.4 GHz
Receive	7.25 to 7.75 GHz
Planning Range	16,093 km (10,000 mi)
Power Input	120/208 V AC, 50/60 Hz
Power Source	30-kW generator (two each)
Power Output	1 kW max
Antenna System	One quick-reaction, 8 ft parabolic one 20-foot parabolic that can transmit and receive multiple carriers
Set-Up Time	Approximately one hour to satellite acquisition with small antenna; within 12 hours for large dish

AN/TSC-86
Satellite Communications Terminal

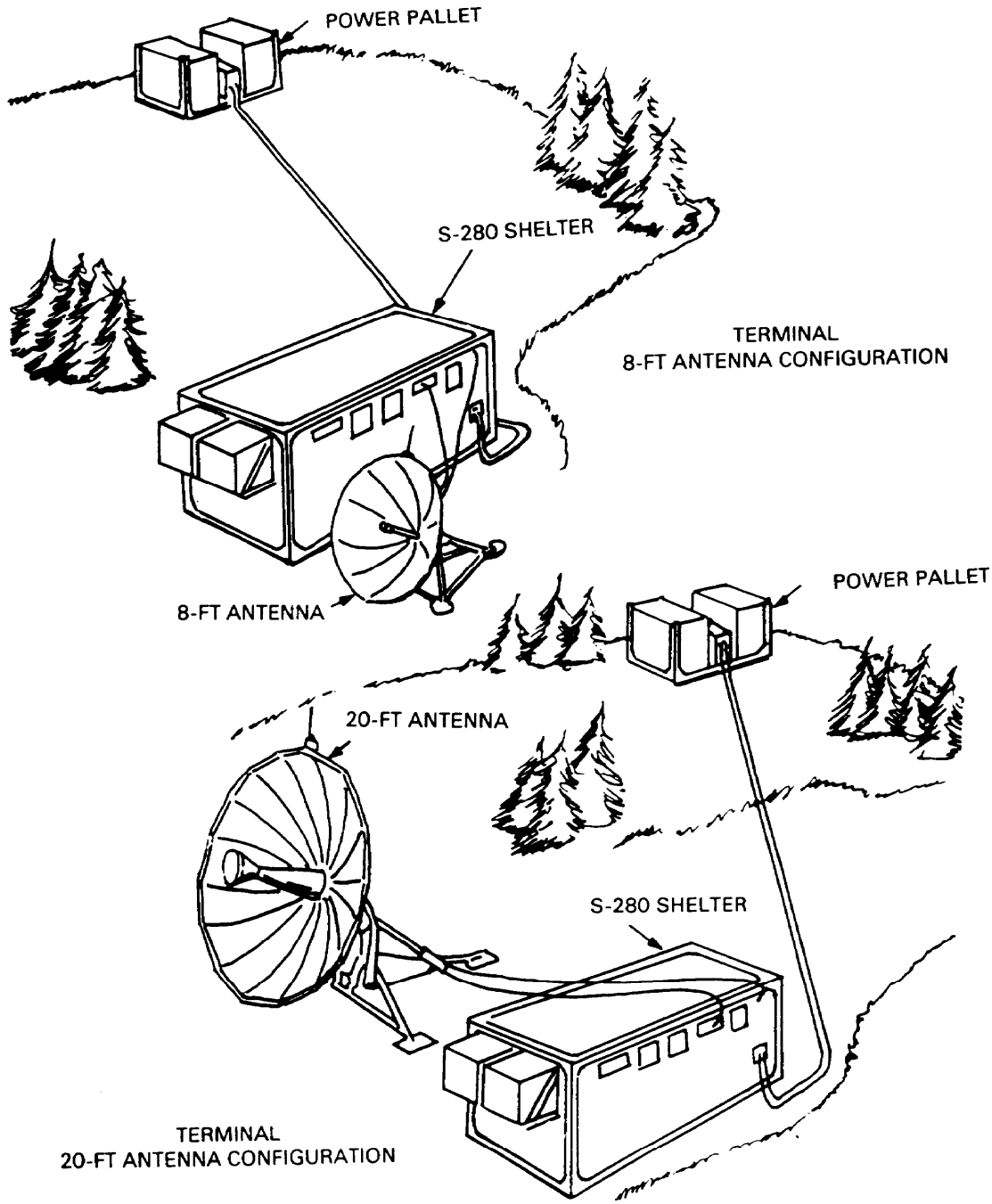

AN/TSC-93A and AN/TSC-93B
Satellite Communications Terminals

NSN: 5895-01-113-5344 (AN/TSC-93A)
5895-01-284-8307 (AN/TSC-93B)

Reference: 11-5895-1127-10 (AN/TSC-93A)
11-5895-1434-12-1 (AN/TSC-93B)

General Information

The AN/TSC-93A and AN/TSC-93B terminals contain equipment to receive, transmit, and process medium and high capacity multiplexed voice, data, and teletypewriter circuits. Using encryption equipment, they will process secure and nonsecure traffic. The terminals are intended for point-to-point operation in tactical communications systems. They can simultaneously transmit and receive a single high data-rate carrier. The terminals include modulation and demodulation equipment and a specialized PCM signal processor. Digital interfaces are set up using external connections for an intercommunications set, field telephones, wideband 70 MHz, and CBR alarm. These terminals are used as a communications link via satellite with the AN/TSC-85A, or another AN/TSC-93A.

Major Components

	-93A	93B
Receiver-Transmitter Orderwire RT-1287/TSC	1	1
Frequency Converter CV-3201/TSC	2	1
Digital Data Modern MD-945/TSC	1	1
Radio Frequency Amplifier AM-6701/TSC	1	
Power Supply PP-7087		
Power Supply PP-7712(V)2/TSC	1	1
Frequency Converter CV-3189/TSC	1	
Multiplexer/Demultiplexer (TSSP) TD-1147/TSC	1	
Multiplexer/Demultiplexer (TSSP) TD-1337(V)2/TSC	1	1
Multiplexer TD-754/G		
Multiplexer TD-660/G	2	
High-Speed Data Buffer TD-1065/G	2	
Echo Suppressor MX-9635A/TSC	2	
Converter CV-1548/G	2	
Security Device TSEC/KY-57 (not basic issue)	2	

Major Components (Cont.)

	-93A	93B
Multiplexer TD-1069/G (not basic issue)	1	1
Telephone Set TA-312/PT	1	1
Intercommunications Station LS-147F/FI	1	1
Antenna AS-3036/TSC	1	
Antenna Control C-10237/TSC	1	
Antenna Control C-10348/TSC	1	
Shelter S-250	1	

Technical Characteristics

Frequency Range:
- Receive . . . . . 7250 to 7750 MHz
- Transmit . . . . . 7900 to 8400 MHz

Power Output . . . . . 500 W (nominal) at antenna

Single Channel Operation:
- (Digital Voice) . . . . . 16/32 kb/s

Multichannel Operation:
- AN/TSC-93 . . . . . 6, 12, 24 channels
- AN/TSC-93A . . . . . 6, 12, 24, 18-96 channels (48 kb/s per channel at true multiplex data rate)

Power Requirements:
- AN/TSC-93 . . . . . 115 V AC 10%, 50/60 Hz 5% single phase 1380 W (nominal)
- AN/TSC-93A . . . . . 115 V AC 10%, 50/60 Hz 5% 3-phase 5-wire, 5500 W (nominal)

Organic Power:
- AN/TSC-93 . . . . . PU-619 (modified)
- AN/TSC-93A . . . . . 2 1/2 ton truck (two each)

AN/TSC-93A
Satellite Communications Terminal

Roadside

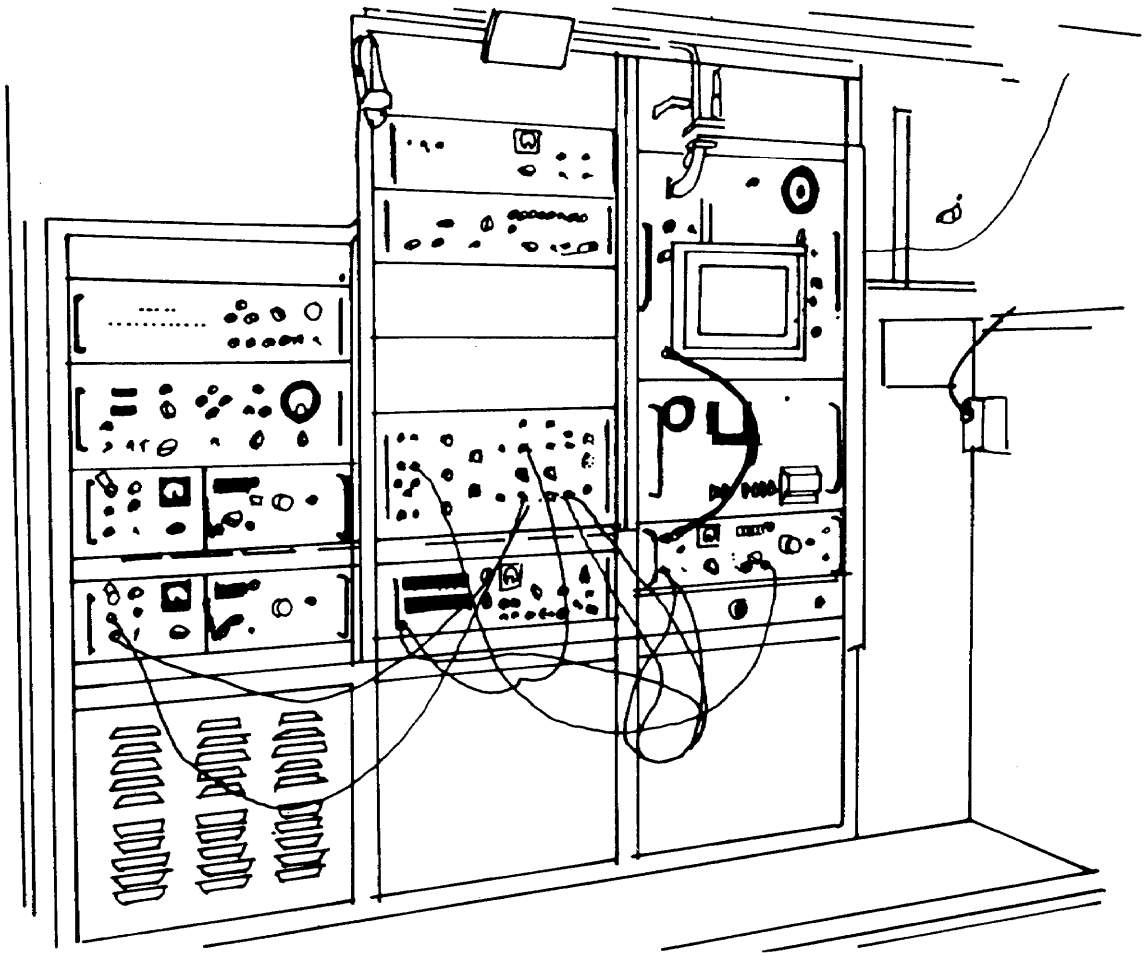

AN/TSC-93A
Satellite Communications Terminal

Curbside

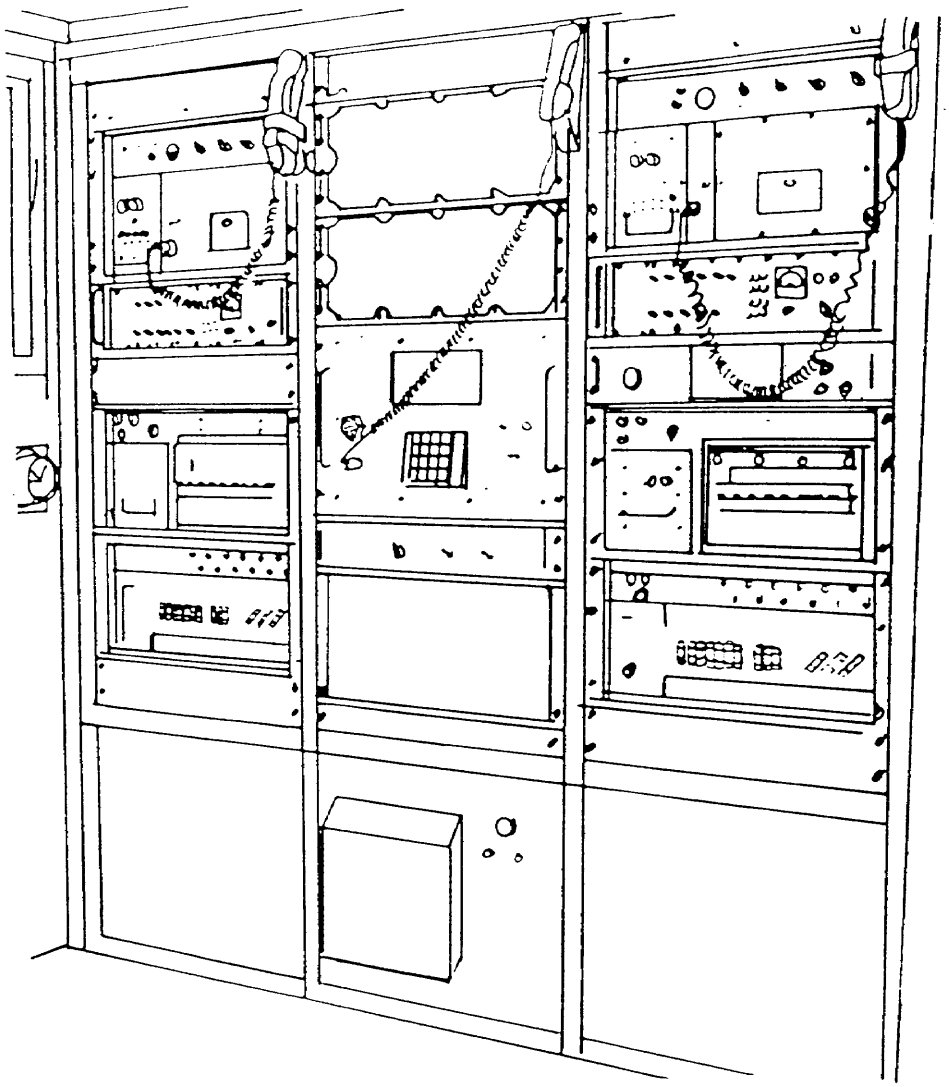

AN/TSC-93B(V)1
Satellite Communications Terminal

Roadside

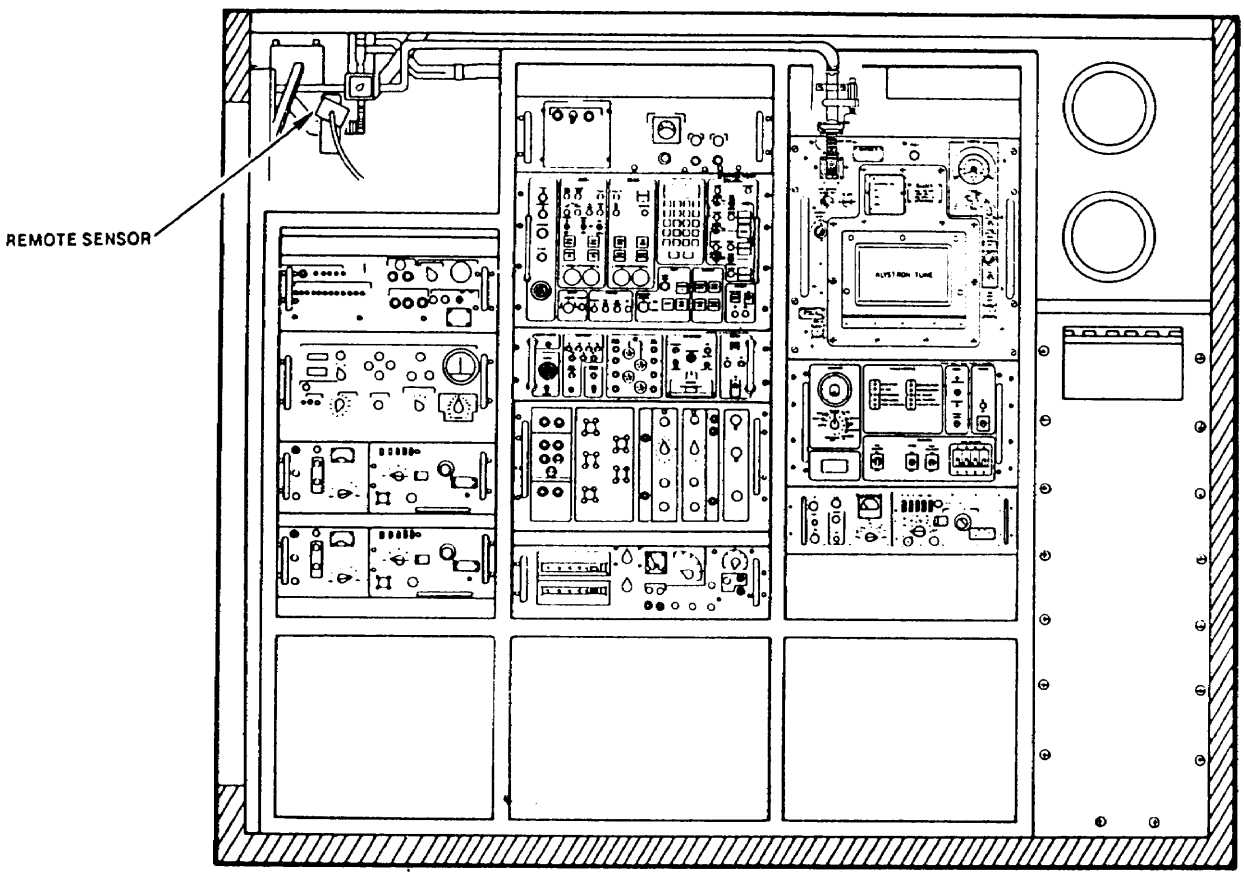

AN/TSC-93B(V)1
Satellite Communications Terminal

Curbside

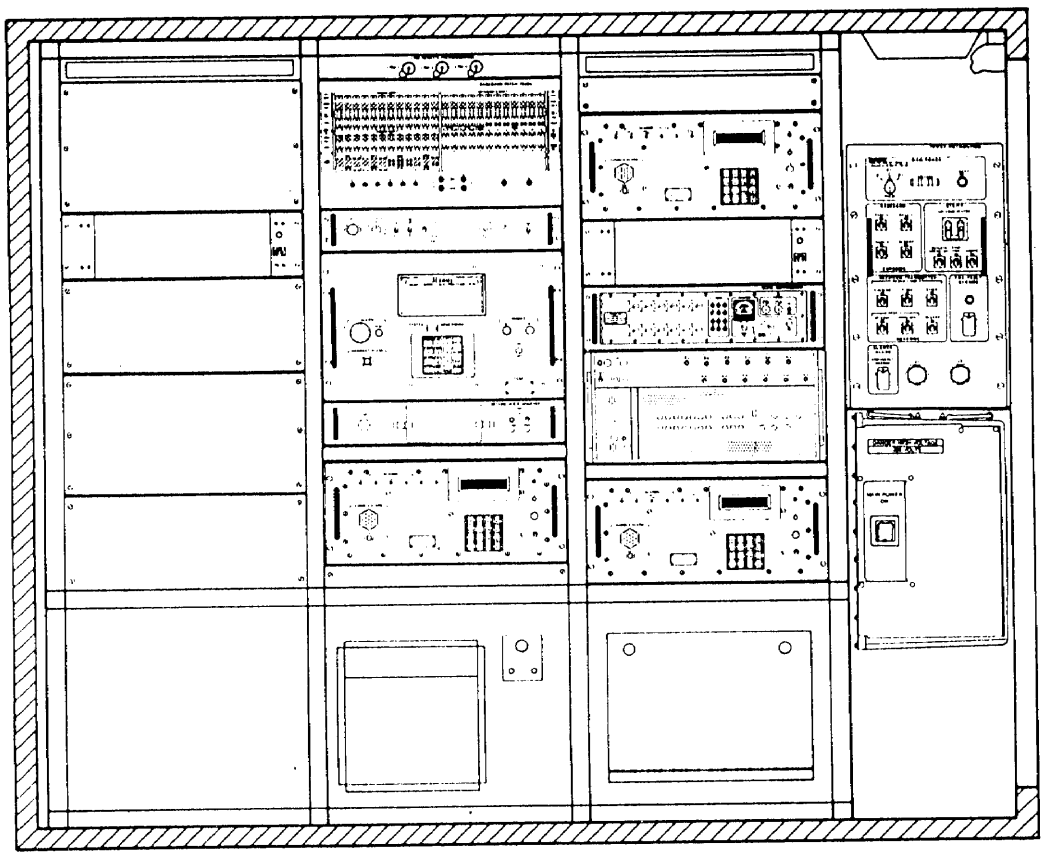

AN/TSC-93B(V)2
Satellite Communications Terminal

Roadside

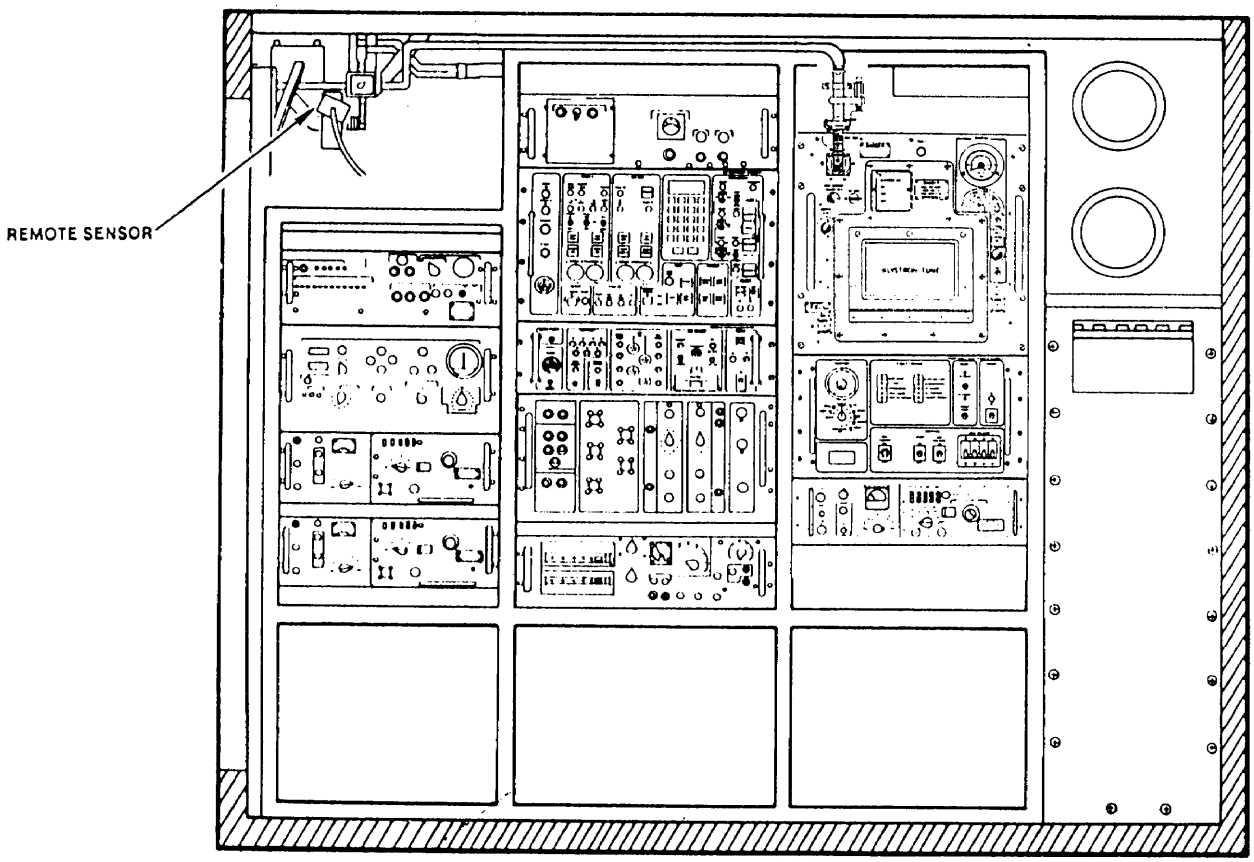

AN/TSC-93B(V)2
Satellite Communications Terminal

Curbside

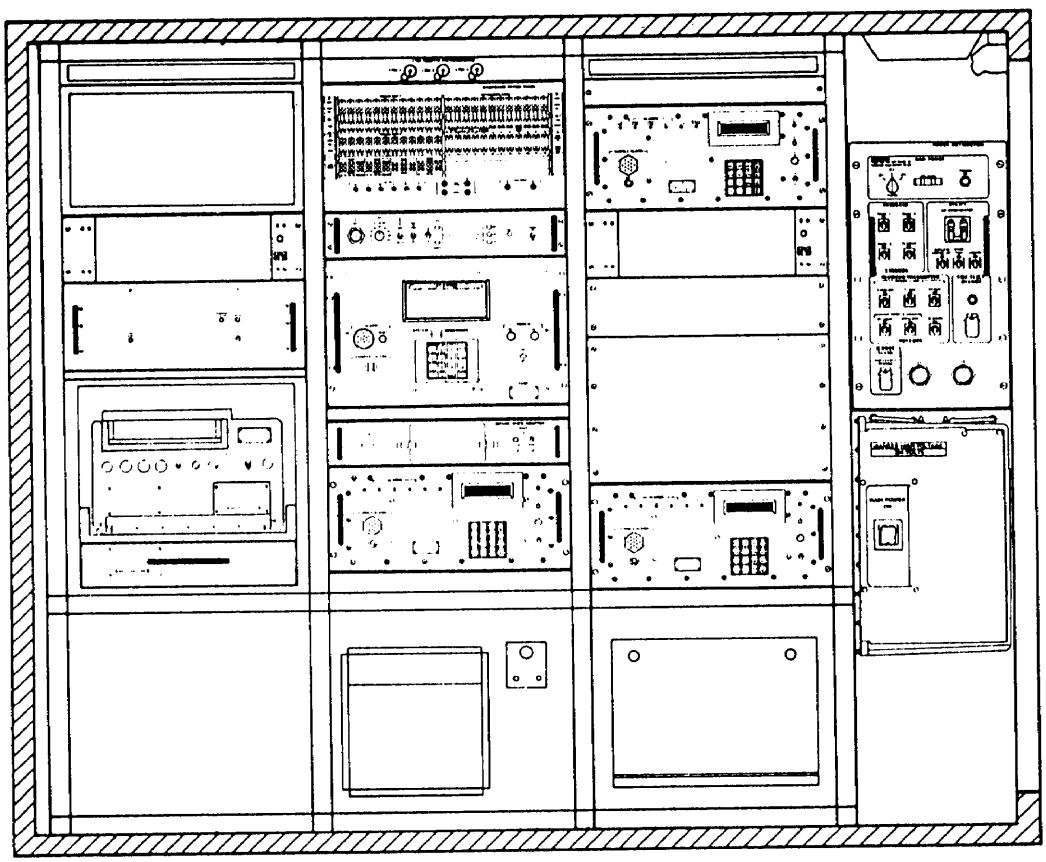

MILSTAR Ground Command Post

NSN: To be determined

Reference: To be determined

General Information

The MILSTAR ground command post (GNDCP) terminals are designed for high capacity CP operations. This includes a mission control segment interface, force direction, CINCNET operation, and full-beam management capability. Depending on the configuration (and branch of service) the terminal can be fixed or transportable by aircraft, ship, or truck. The terminals use an extremely high frequency (EHF) uplink and a SHF downlink. Fielded terminals will use the Fleet Satellite (FLTSAT) EHF packages on FLTSAT 7 and 8 until the MILSTAR satellites are launched and operational.

Technical Characteristics

Communications Capability:

- Throughput: Can transmit on four EHF channels at 75-2400 bp/s, four EHF channels at 75-300 bp/s; and receiving sixteen SHF channels at 75-2400 bp/s and sixteen UHF DAMA channels crossbanded to SHF.

Security:

- KG-84A and KGV-11A COMSEC encryption.

Antenna:

- Fixed: 90 inch parabolic with ground fixed radome.
- Transportable: 96 inch with no radome (carried on a five-ton truck).

Shelter:

- Fixed: Housed in operational center
- Transportable: S280 transported by a five-ton truck.

Power:

- Fixed: Commercial power
- Transportable: Two 30 kW generators

MILSTAR Ground Command Post

AN/FRC-181 (EHF/UHF FIXED GNDCP)

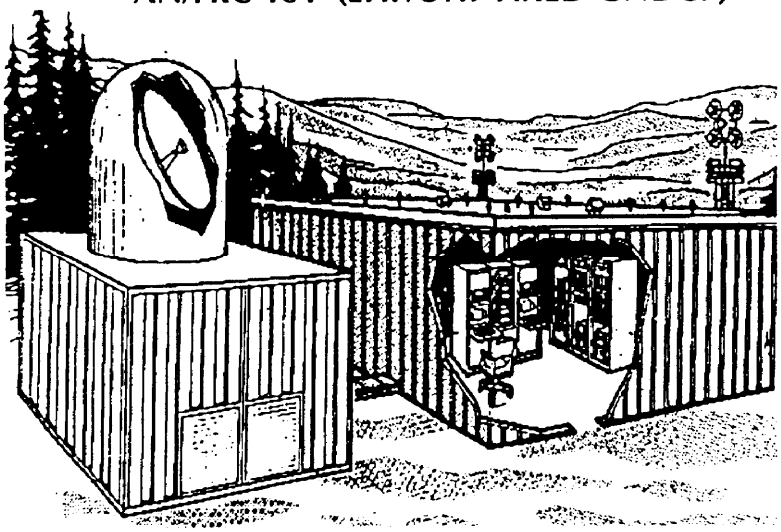

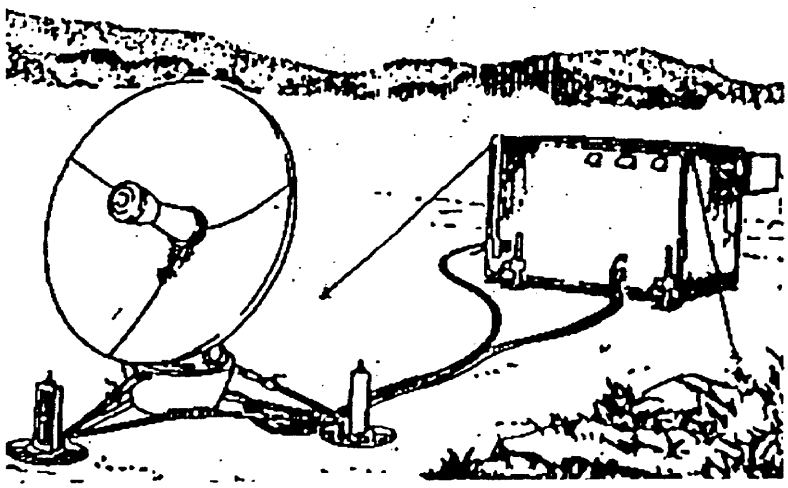

AN/TRC-194 (EHF/UHF TRANSPORTABLE GNDCP)

MILSTAR SMART-T

NSN: To be determined

Reference: To be determined

General Information

The Secure Mobile Anti-Jam Reliable Tactical Terminal (SMART-T) is a HMMWV mounted, EHF terminal that provides multichannel range extension for MSE at division and corps. The terminal operates at T-1 (1.544 Mb/s) over the MILSTAR satellite (it also can operate over EHF packages on FLTSAT and UFO. It provides LPI/D, built-in transmission security (TRANSEC) with over-the-air rekeying (OTAR), and a capability to interface and control certain aspects of the satellite such as resource control and antenna pointing. SMART-T will replace the multichannel GMF terminal for hard core and core users.

Technical Characteristics

Communications Capabilities:

• Throughput: Can support multiple, simultaneous, low data rate (LDR) and medium data rate (MDR) data streams up to an aggregate data rate of 2.240 Megabits (million) per second Mb/s.

• Data Rates: Four data streams at 128, 256, 512, or 1024,
One data stream at T-1.

Frequency:

• Uplink: 43.5 -45,5 GHz (Q Band) with 2 GHz Bandwidth
• Downlink: 20.2 -21.2 GHz (K Band) with 1 GHz Bandwidth
• Security: TRANSEC only integrated GPS

Block of Instruction Presentation (BOIP): ECB

MILSTAR SMART-T

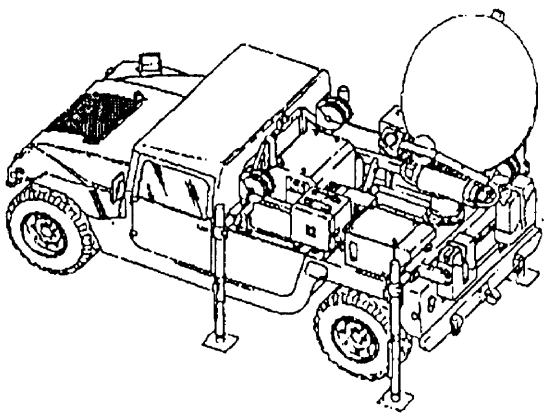

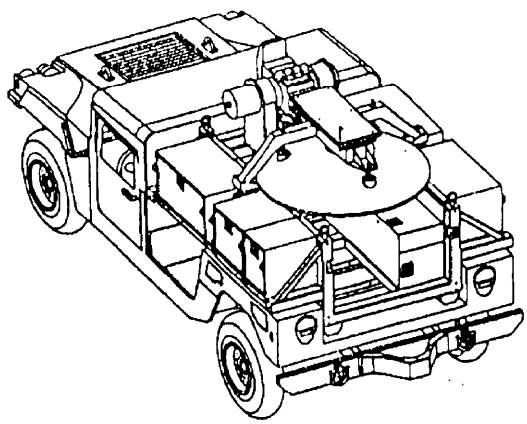

STAR-T

NSN: To be determined

Reference: To be determined

General Information

The SHF Tri-Band Advanced Range Extension Tactical Terminal (STAR-T) is a HMMWV mounted multichannel satellite terminal. It has a tri-band capability in the SHF range. The STAR-T terminal will operate over commercial and military SHF systems and will interface with both commercial and military switching systems. It will provide the required range extension for TRI-TAC systems at EAC and non-terrrestrial communications connectivity between EAC and ECB.

Technical Characteristics

Frequency Range:

3.9 GHz-6.2 GHz (C Band)
6.2 GHz-10.9 GHz (X Band)
15.25 GHz-17.25 GHz (Ku BAND)

Characteristics:

Four T-1 (1.54 Mb/s) circuits or four E-1 (2.048 Mb/s)
Circuits for a total aggregate of 8.192 M/bs

BOIP:
EAC

Milestones:

To be determined

STAR-T

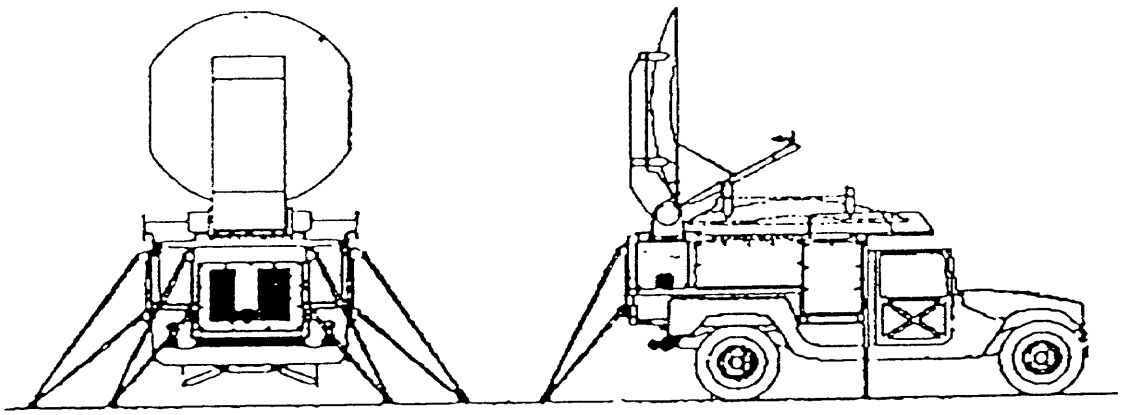

Section VI. Single-Channel Tactical Satellite Communications Radios

AN/CSZ-1A
Sunburst II Processor

*** This radio is an over-the-counter commercial purchase obtained by the US Army.**

NSN: To be determined

Reference: To be determined

General Information

The AN/CSZ-1A Sunburst II processor provides high grade half-duplex secure voice and data communications over wideband and narrowband communications links. The Sunburst II supports both secure voice and secure data at 12 and 16 kb/s over wideband radio links. The unit also provides narrowband secure voice (LPC-10E) and secure data at 2.4 kb/s for radio or wire line transmission. The Sunburst II incorporates the indictor COMSEC module, and has been endorsed by the National Security Agency to encrypt voice and data up to the TOP SECRET level. Key features include ANDVT compatibility and the capability to receive OTAR in both narrowband and wideband modes. The Sunburst II provides the user with the capability to communicate to a host of existing COMSEC equipment such as KY-57/58 VINSON, ANDVT/KYV-5, KG-84 A/C, SINCGARS, Fascinator, STICS, and Sunburst I.

Technical Characteristics

Operating Modes	Wire line/Telephone 2.4 kb/s voice/data 9.6 kb/s data radio 2.4 kb/s voice/data 12 kb/s voice/data 16 kb/s voice/data
Power Source	BA-5590/U BB-590/U LSAD-100 AC/DC Power Supply
Weight	6.3 lbs

Technical Characteristics
(Cont.)

Interfaces:
Radio MIL-STD-188C
Wire line . . . . . CCITT V.27
Data RS-232
Voice . . . . . H-189/H250 handset

AN/CSZ-1A
Sunburst II Processor

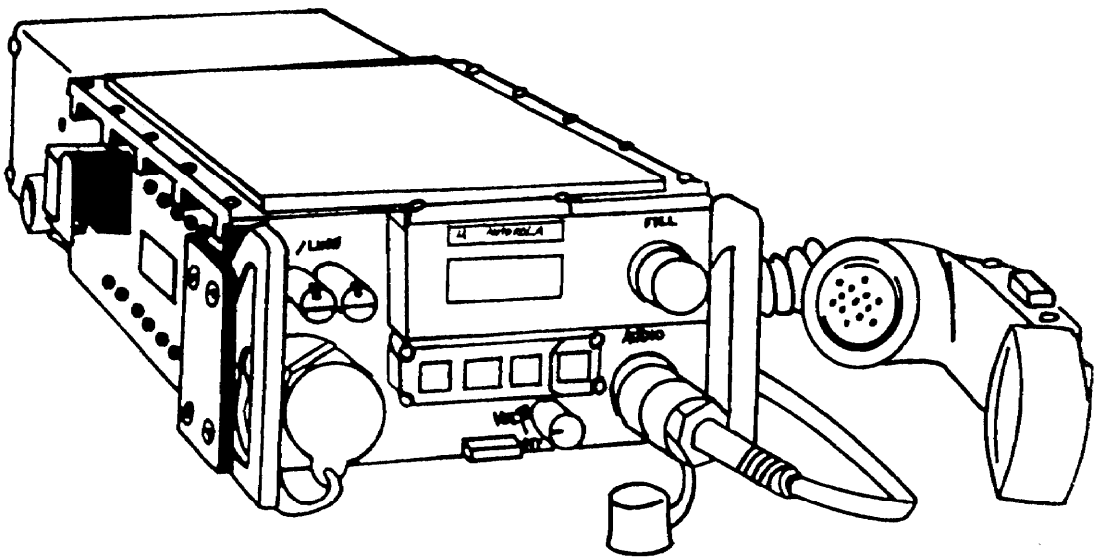

AN/PSC-3 and AN/VSC-7
Tactical Satellite Communications Radio Sets

NSN: 5820-01-145-4943
5820-01-090-5449

Reference: TM 11-5895-1180-10
TM 11-5895-1181-10

General Information

The AN/PSC-3 and AN/VSC-7 equipment is compact, lightweight, and deployable in quick-reaction situations where extended communication range is essential to mission effectiveness. The equipment can operate on-the-move/LOS at 2 W, or in the at-halt/satellite mode at 35 W and can transmit or receive in voice or data formats in both modes. The equipment can be used with Speech Security Equipment TSEC/KY-57 or TSEC/KY-99. The AN/VSC-7 is used as a net control station (NCS) and is mounted in a 1/4 ton vehicle or an S-280 communications shelter. It can serve up to 15 AN/PSC-3 terminals in a communications net with the selection of conference or individual call-codes available at the control converter C-1119()/VSC-7, front panel.

Technical Characteristics

Bandwidth . . . . . Transmit/receive on 5 to 25 kHz
Frequency Range . . . . . 225 to 399.995 MHz, also 16-kb/s emergency voice communications over a 5 and 25-kHz satellite channel
Power Input . . . . . 22 -32 V DC
Power Output . . . . . SAT, 35 W; LOS, 2 W
Power Source . . . . . AN/PSC-3: Two BB-590/U NI-CAD batteries, two BA-5590/U lithium batteries, PP-6148()/U power supply or G-76 (V)1/G DC generator AN/VSC-7: Vehicular power system or 110/220 V AC 50 to 400 Hz
Antenna . . . . . Omnidirectional whip antenna for LOS; medium-gain, collapsible antenna for at-halt communications satellite

Technical Characteristics (Cont.)

Weight ..... RT-1402( )/G with Battery Box CY-8006()/PSC-3, 7.27 kg (16 lb);
Control Converter C-1119()/VSC-7, 17.73 kg (39 lb);
Digital Message Device Group OA-8990()/P, 3.98 kg (8.75 lb)

AN/PSC-3
Tactical Satellite Communications Radio Set

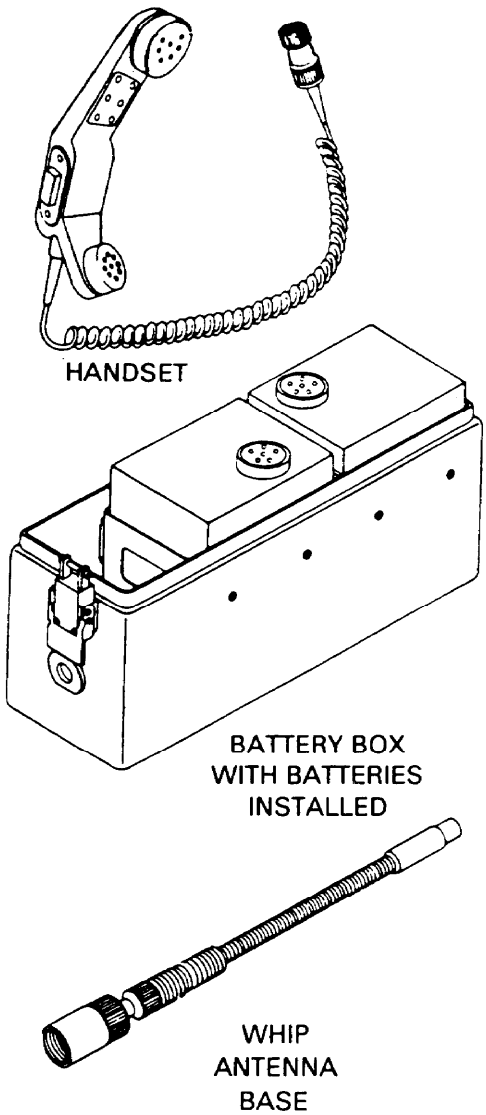

AN/PSC-3
Tactical Satellite Communications Radio Set (Cont.)

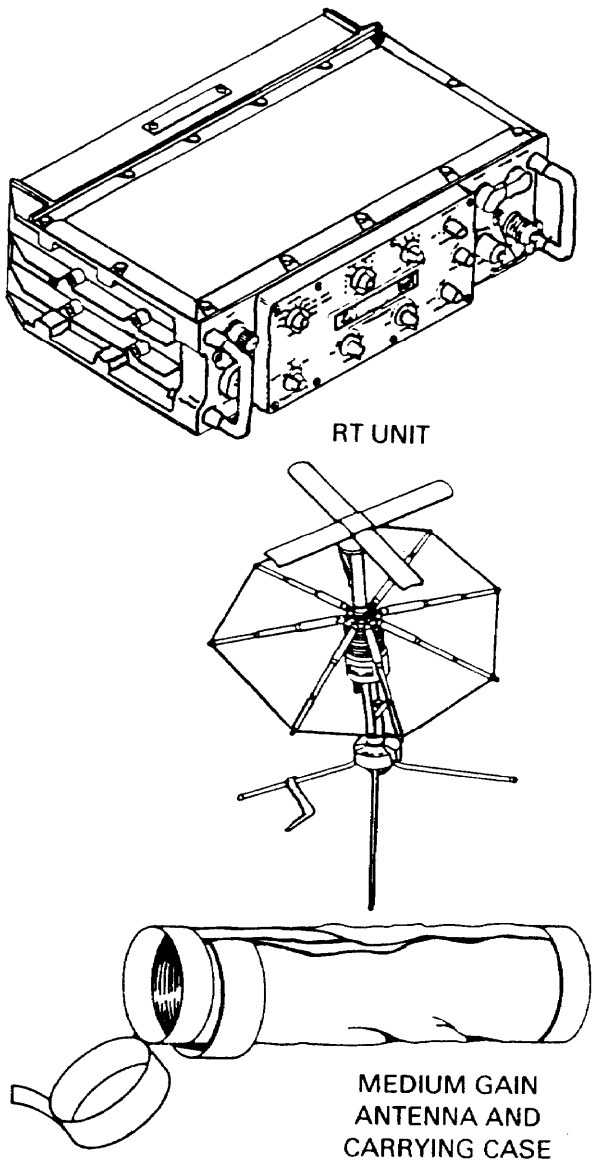

AN/VSC-7
Tactical Satellite Communications Radio Set

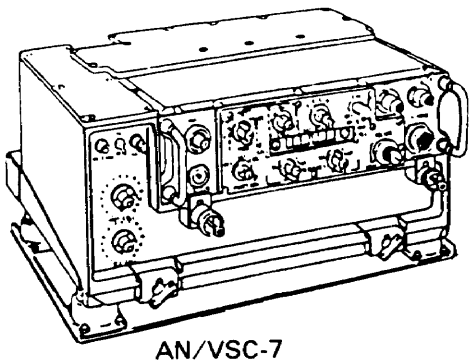

AN/VSC-7
(AN/PSC-3( ) WITH CONTROL CONVERTER)

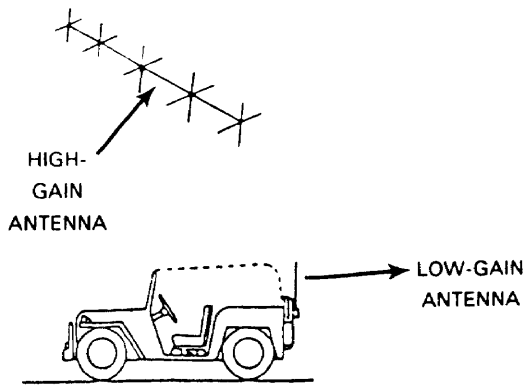

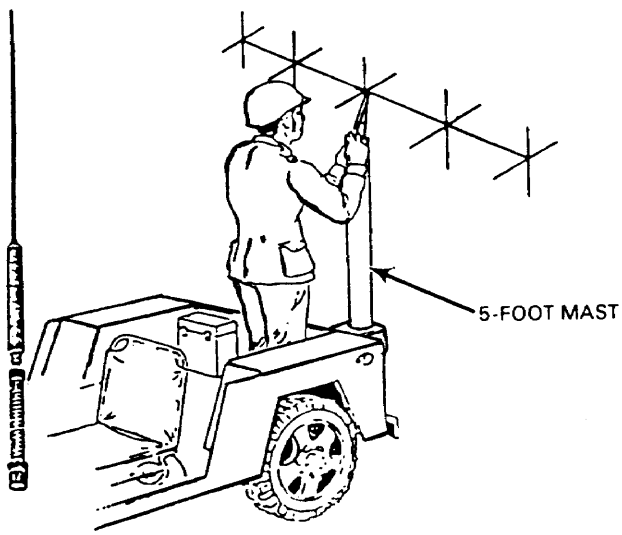

HST-4A
Satellite Communications or Line-of-Sight Radio

NSN: 5895-01-293-3579

Reference: To be determined

General Information

The HST-4A provides satellite or LOS communication in data or voice modes. The small, lightweight transceiver operates in the UHF band from 225 to 400 MHz. A two-card modern is built in providing 1200 or 2400 bp/s data capability as well as up to 16 kb/s FSK for both transmit and receive.

Technical Characteristics

Bandwidth . . . . . Transmit/Receive on 5 and 25 kHz
Frequency Range . . . . . 225 to 399.995 MHz
Tuning Increments . . . . . 5 kHz: FM, X, D1.2 or D2.4 data mode
Preset Channels . . . . . 4 preset, 1 manual
Receive Offset Frequency . . . . . 0 to +/- 174.995 MHz offset from the transmit frequency
Frequency Stability . . . . . +/- 1 PPM over temperature and supply voltage for one year
Guard Channel . . . . . 243.000 MHz AM
Signal Strength . . . . . Five-light display indicates receive signal strength and relative indication of transmit power in all modes
Data Rates:
With Built-In Modem . . . . . 1200 bp/s 2400 bp/s; BPSK, DBPSK
Wideband Secure Voice . . . . . 16 kb/s; FM-FSK and AM-ASK with KY-57
Remote Control . . . . . All models, presets, and frequencies can be remotely controlled through the X mode-connector serial input
Weight . . . . . 3.1 kg (7 lb)
Input voltage . . . . . +24 V DC nominal (20 to 30 V DC without degradation)

Technical Characteristics (cont.)

Current consumption ..... 22A receive, 3.5 A transmit
Power sources ..... BB-590/U Rechargeable Nickel-Cadmium Battery, BA-5590/U Lithium Battery
Antenna..... Omnidirectional whip antenna, for LOS; medium-gain, collapsible antenna for at-halt communications

HST-4A
Satellite Communications or Line-of-Sight Radio

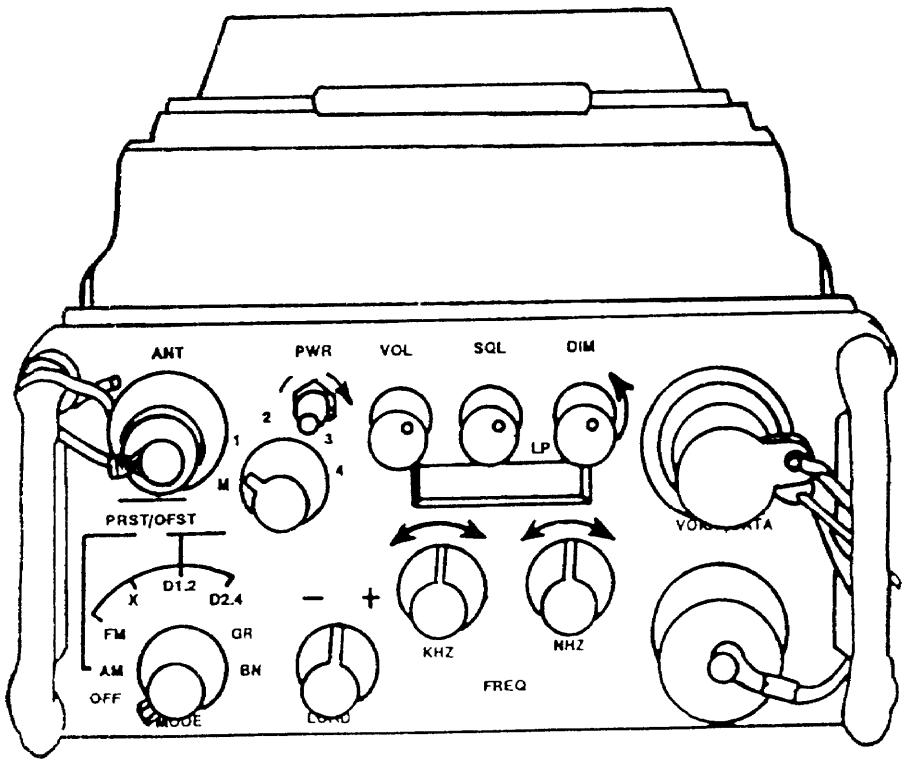

LST-5B and LST-5C
Lightweight Satellite/Line-of-Sight Terminal

***This radio is an over-the-counter commercial purchase obtained by the US Army.**

NSN: To be determined

Reference: To be determined

General Information

The LST-5B and LST-5C can be configured as manpack, vehicular, shipboard, or airborne and can be operated by remote control via dedicated hardware or personal computer based software through X-mode connector. It modulates in AM and FM voice, cipher, data, and beacon.

Technical Characteristics

Bandwidth ..... Transmit/receive on 5 kHz and 25 kHz
Frequency Range ..... 225-399 .995 MHz
Channel Spacing ..... 5 kHz and 25kHz
Frequency Accuracy ..... 1 ppm over operating temperature and for one year
Modulation ..... AM and FM, voice, cipher, data and beacon 1200 BPSK, 2400 SBPSK data, non-differential or differential encoded data
Operating Modes ..... BPSK, SBPSK,
(1) Plain text: AM, FM
(2) Cipher text AM, FM
(3) T-R: Transmit/receive on any of nine preset channels
(4) Beacon; transmit swept tone on selected frequencies
(5) SELCALL: 75 selective call codes, one conference call code
Power Output ..... FM, PM: adjustable in 2 W steps from 2 to 18 W AM: low 2 W, high 5 W
Weight ..... 8.4 lbs

Equipment Compatibility

LST-5B

AN/CSZ-1
ANDVT
KY-57/58
AM-717/URC
PTPE-100, 101
DMDG
AN/URC-101/104/110
AN/PSC-3
HST-4
Grid Computer

LST-5C

AN/CSZ-1, 1a, 11, Packet
ANDVT/KYV-5
KY-57/58/65, KG-84
AM-7175/URC, 200 W PA
PTPE 100/101 Pre-amp
Grid, DMDG, Most RS-232 Devices
AN/URC-101/104/110
AN/PSC-3, ARC-171
HST-4/AN/PSC-3/AN/VDC-7, VGIU
FAX, still & slow scan video

LST-5B and LST-5C
Lightweight Satellite/Line-of-Sight Terminal

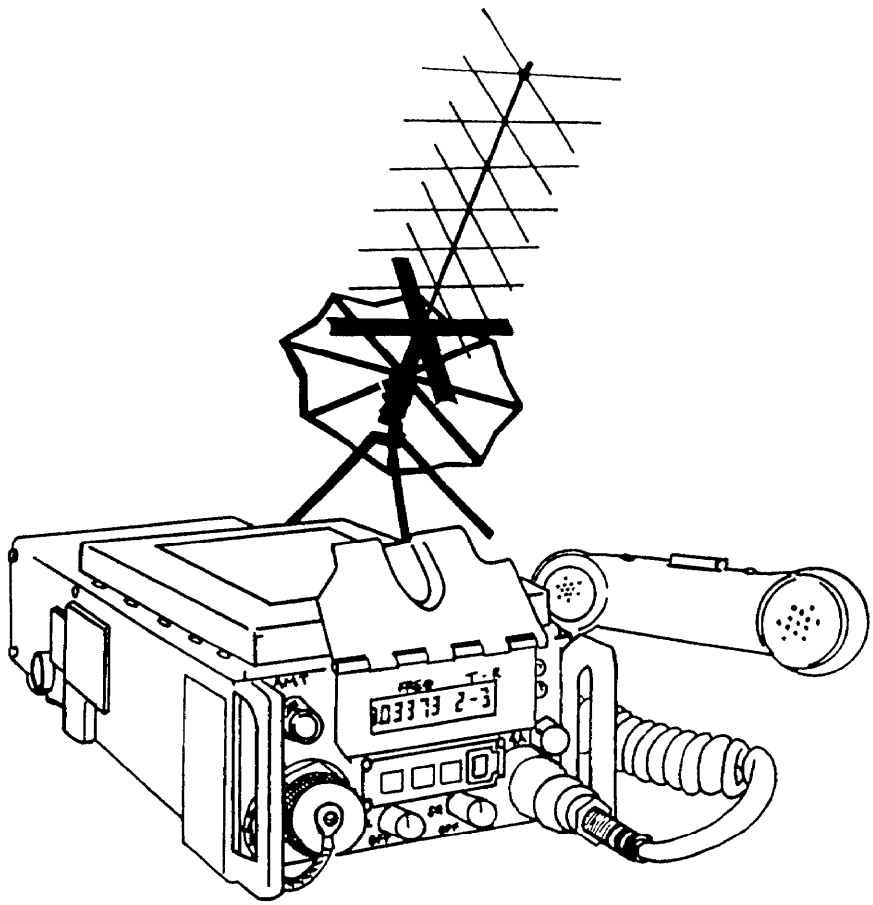

AN/PSC-7
Lightweight Satellite Transceiver

NSN: 5820-01-366-8919

Reference: To be determined

General Information

The AN/PSC-7 is exclusively for use in the Commanders WarFighter Network. This radio is an improved version of the HST-4A and includes improvements of increased power output, 30 percent more efficient, better off-frequency noise regection and compatibility to the KY-99. It provides satellite or LOS communication in data or voice modes. The small, lightweight transceiver operates in the UHF band from 225 to 400 MHz. A two-card modem is built in providing 1200 or 2400 bp/s data capability as well as up to 16 kb/s FSK to transmit and receive.

Technical Characteristics

Frequency Range . . . . . 225 to 399.995 MHz
Tuning Increments . . . . . 5 kHz; FM, X, D1.2, or D2.4 data mode 25 kHz: AM modes
Power Output-(variable) . . . . . <1 to 22 W (SAT) continuously from 1 W to max output
<1 to 2 W (LOS) continuously from 1 W to max output
Preset Channels . . . . . 4 preset, one manual
Receive Offset Frequency . . . . . 0 to +/- 174.995 MHz offset from the transmit frequency
Frequency Stability . . . . . +/-1 ppm over temperature and supply voltage for one year
Guard Channel . . . . . 243,000 MHz AM
Signal Strength . . . . . Five-light display and indicates receive signal strength and relative indication of transmit power in all modes
Data Rates:
With Built-In Modem . . . . . 1200 bp/s, 2400 bp/s; BPSK, DBPSK
Wideband Secure Voice . . . . . 16 kb/s; FM-FSK and AM-ASK with KY-57
Remote Control . . . . . All models, presets, and frequencies can be remotely controlled through the X-mode connector serial input
Weight . . . . . 3.1 kg (7 lb)

Technical Characteristics (Cont.)

Input Voltage ..... +24 V DC nominal (20 to 30 V DC without degradation)
Current Consumption ..... 22 A receive, 3.5 A transmit
Power Source ..... BB-590/U Rechargeable Nickel-Cadmium Battery
BA-5590/U Lithium Battery
Antenna ..... Omnidirectional whip antenna. For LOS; medium-gain, collapsible antenna for at-halt communications

AN/PSC-7
Lightweight Satellite Transceiver

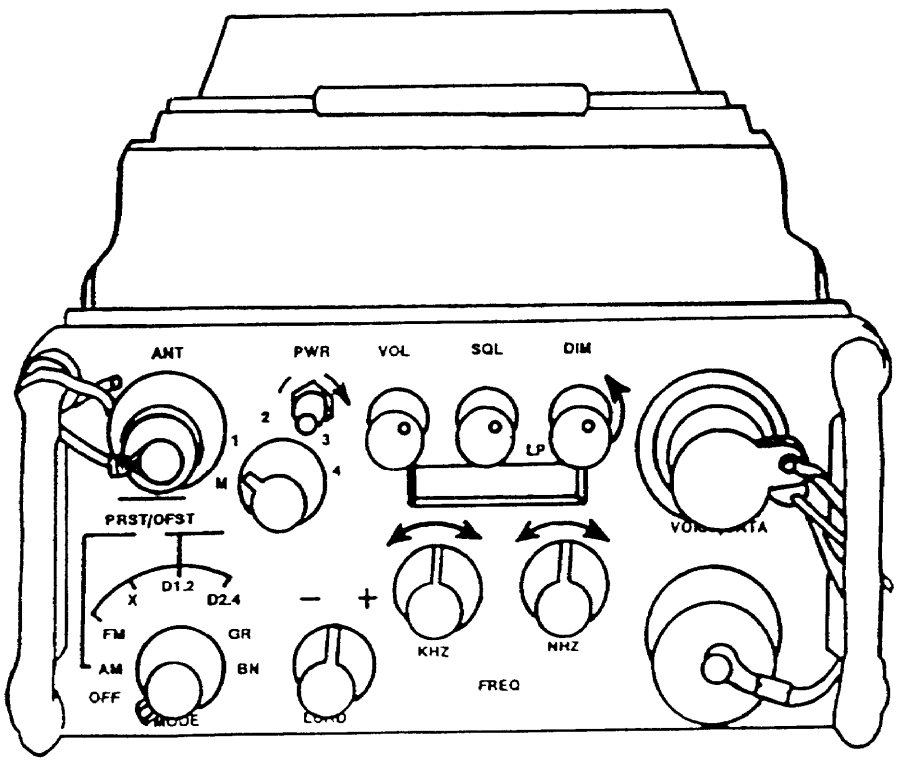

AN/PSC-5
Enhanced Manpack Ultra High Frequency Terminal

NSN: To be determined

Reference: To be determined

General Information

The terminals contain multiservice, nondevelopmental item (NDI), small lightweight, man-portable, single channel, UHF SATCOM radio. The terminals include embedded COMSEC, narrowband voice, 5/25 kHz AMA as well as LOS communications (voice and data).

Technical Characteristics

- 5 and 25 kHz channelization
- KG-84, KY-57/-58 Embedded COMSEC
- KYV-5 narrow and compatible
- Less than 15 lbs and 450 cubic in (radio only)
- DAMA capability for 5 and 25 kHz

AN/PSC-5
Enhanced Manpack Ultra High Frequency Terminal

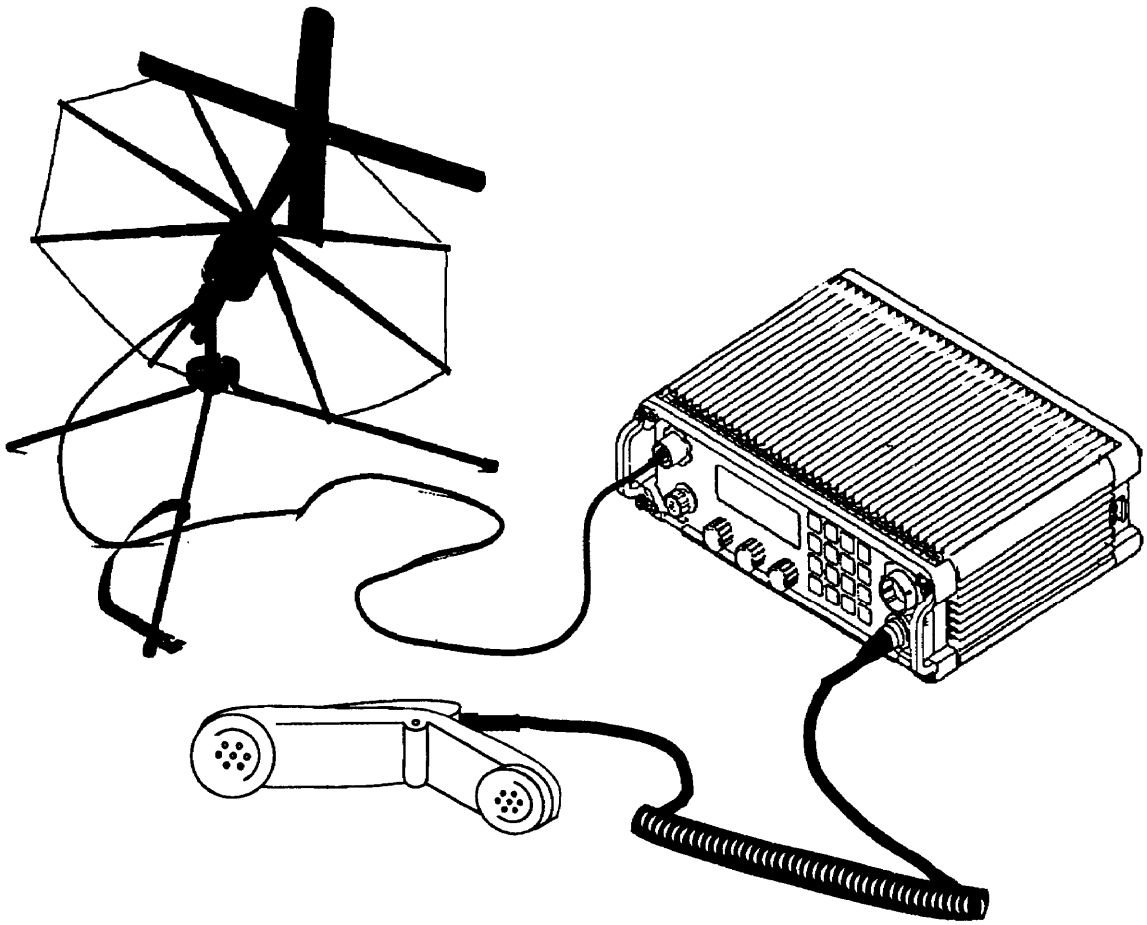

TSQ-190(V) Special Purpose Integrated Remote Intelligence Terminal (SPIRIT II)

General Information

SPIRIT II is a mobile SHF communications system for the dissemination of secondary imagery and operation with the TROJAN network. The system will be deployed in three versions: V1 is the basic C/Ku-band configurable; V2 adds the capability for configuration for DSCS operations; and V3 which will add a UHF single channel radio to the basic V1 system option.

Technical Characteristics

- Configurable for C/Ku-band satellite communications, and X-band in some cases
- Max data rate 512 kb/s; nominal 64 to 512 kb/s
- Primary shelter, spare equipment module, and mobile antenna platform
- 2.4 meter mobile antenna for V1/3 systems, and 5.5 meter antennas for X-band operations
- BOIP: Field to division through theater MI brigades

TSQ-190(V) Special Purpose Integrated Remote Intelligence Terminal (SPIRIT II)

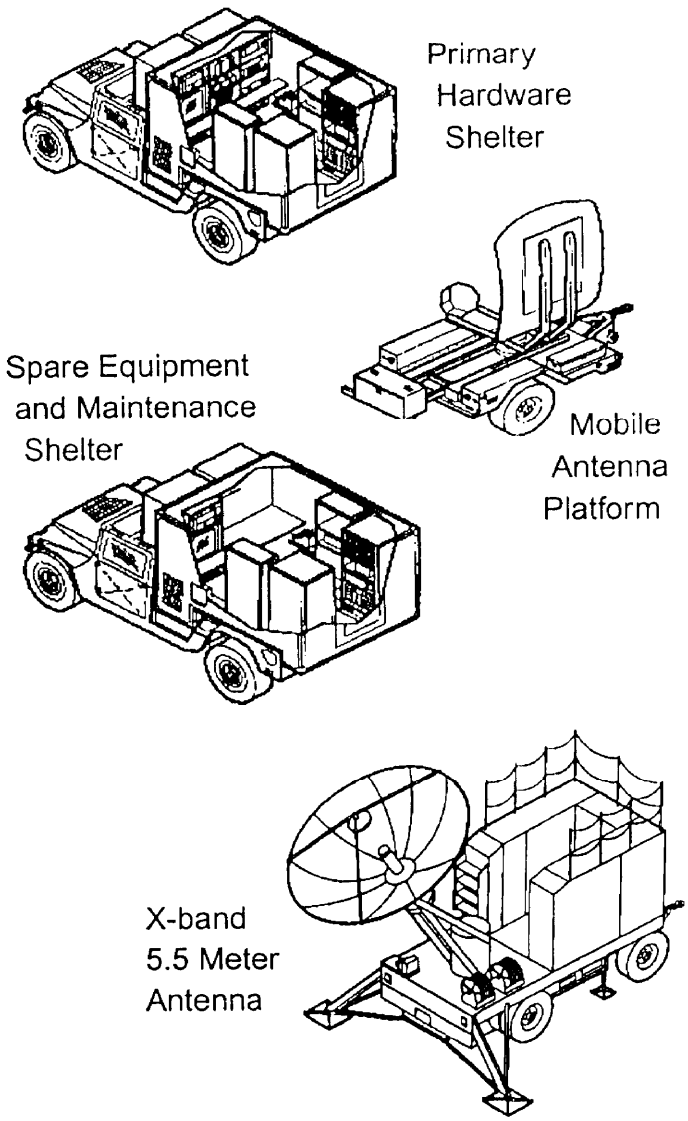

MILSTAR SCAMP

NSN: To be determined

Reference: To be determined

General Information

SCAMP is a manpackable, single channel terminal that is designed to interface with the MILSTAR low data rate (LDR) payload (it also can operate over EHF packages on FLTSAT and UFO). The terminal will operate in point-to-point and broadcast modes providing voice and data service at a maximum data rate of 2.4 kb/s. SCAMP Block I will be used for critical command and control communications between headquarters elements and their major subordinate commands. SCAMP Block II will provide point-to-point and CNR range extension for conventional and special operations forces.

Technical Characteristics

Communications Capabilities:

- Throughput: 2.4 kb/s (voice or data)
- Modes of operation: point-to-point or broadcast

Frequency:

- Uplink: 43.5 -45.5 GHz (Q Band) with two GHz Bandwidth

Security

- Embedded COMSEC

Weight:

- Block I: 30 lbs
- Block 11:12-15 lbs

Power:

- Primary Power: BA-5590 or BA-6590
- Alternate Power: 22-33 V DC from a tactical vehicle power integrated GPS

BOIP (Block I/II):

- CINC, theater, joint task force (JTF), corps, division, and brigade

MILSTAR SCAMP

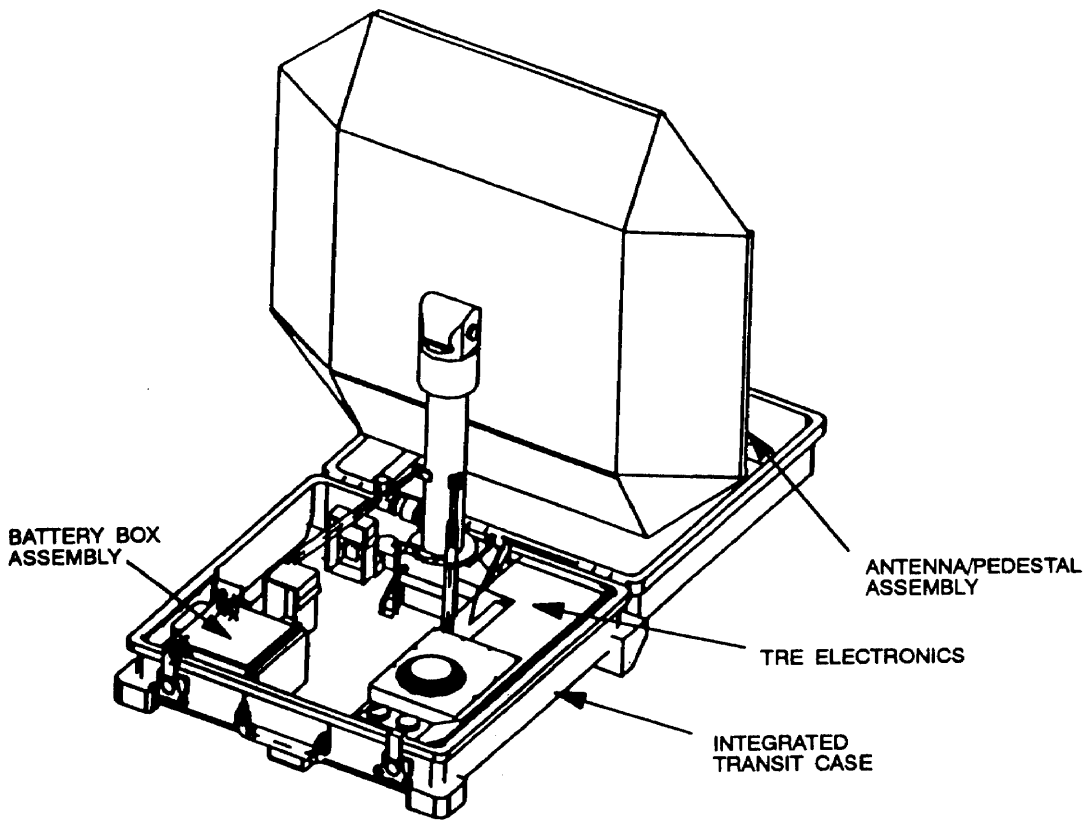

AN/PSN-11
Precision Lightweight Global Positioning System Receiver

NSN: To be determined

Reference: To be determined

General Information

The precision lightweight global positioning system (PLGR) is a self-contained, hand held (man-portable or vehicle mounted) passive GPS receiver. It provides eight-digit grid coordinates with accuracy of 16 meters or less, elevation, velocity and direction of movement. It is used for targeting, reconnaissance, enroute and terminal navigation, surveying and tactical approach landing.

Technical Characteristics

Frequency:
- Ll: 1575.42 MHz
- L2: 1227.6 MHz

Spread Spectrum Techniques:
- Coarse/acquisition (C/A: 1.023 MHz (L1 only)
- Precision (P) Code: 10.23 MHz (L1 & L2)

Weight:
- 275 lbs

Size:
- 70 cubic inches (9.5 x 4.1 x 2.6)

Power:
- BA-5800 (disposable lithium battery)
- Rechargeable NICAD battery
- 110/220 AC
- 9-32 V DC

BOIP:
- Down to squad level

AN/PSN-11
Precision Lightweight Global Positioning System Receiver

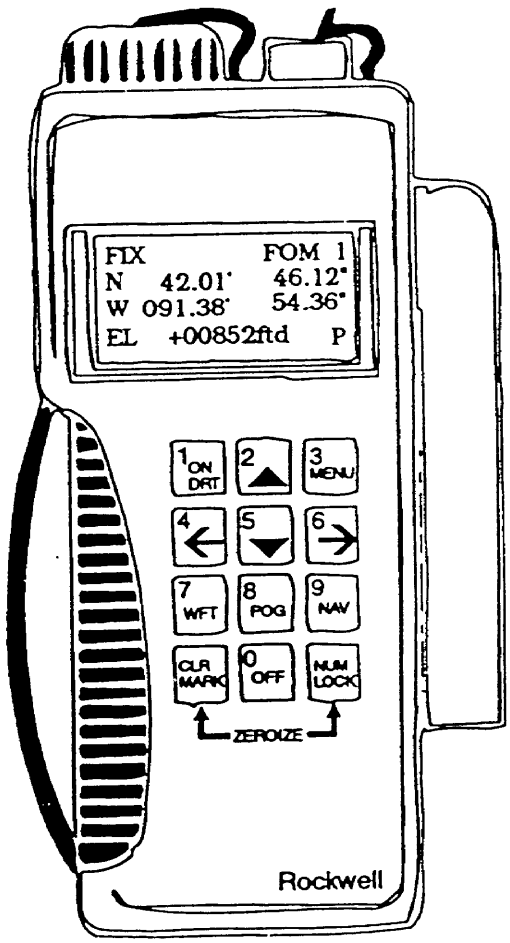

Section VII. High Frequency Radio

AN/GRC-122, AN/GRC-142, AN/VSC-2 and AN/VSC-3 Radio Teletypewriter Sets

NSN: 5815-00-401-9270 (AN/GRC-142)
5815-00-168-1556 (AN/GRC-142A)
5815-00-443-5511 (AN/GRC-142B)
5815-01-100-6815 (AN/GRC-142C)
5815-01-104-7264 (AN/GRC-142D)
5815-01-095-6258 (AN/GRC-142E)
5815-00-401-9719 (AN/GRC-122)
5815-00-401-9719 (AN/GRC-122A)
5815-00-937-5295 (AN/GRC-122B)
5815-01-095-1211 (AN/GRC-122C)
5815-01-096-0428 (AN/GRC-122D)
5815-01-095-1212 (AN/GRC-122E)
5815-00-069-8914 (AN/VSC-2)
5815-00-224-8130 (AN/VSC-3)

Reference: TM 11-5815-334-10 (AN/GRC-122/142 Series)
TM 11-5815-331-14 (AN/VSC-2)
TM 11-5815-332-15 (AN/VSC-3)

General Information

The AN/GRC-122 family consists of medium-power, vehicular-mounted HF-SSB radio sets used primarily for RATT operations; however, they are capable of AM and SSB voice and CW operation. With the addition of a Navy standard one kW Radio Frequency Amplifier AM-3924/URT and Antenna Coupler AN/URA-38A, the AN/GRC-122 becomes an AN/GRC-122(V)2. This modified version provides the capability for long-range communications of 3,862 km (2,400 mi). The AN/GRC-122 and the AN/GRC-142 are both shelter mounted. The AN/VSC-2 is mounted in a jeep and the AN/VSC-3 in an armored personnel carrier, The TSEC/KY-65 (Parkhill) and the ANDVT (minimum term KY-99) will be used for secure-voice operation with the AN/GRC-106.

NOTE: The only difference between the AN/GRC-122 and the AN/GRC-142 is that the AN/GRC-122 has an additional receiver-transmitter and teletypewriter set allowing duplex operation.

Technical Characteristics

Frequency Range . . . . . 2 to 29.999 MHz
Planning Range . . . . . Use short and intermediate distance groundwave and sky wave propagation charts (FM, 11-486-6)
Number of Channels . . . . . RT-662, 28,000 with a channel every 1 kHz
RT-834, 280,000 with a channel every 100 Hz
Power Input . . . . . 28.5 V DC (115 V AC for TT-4, TT-76, TT-98, and UGC-74 is supplied through the control box and inverter)
Power Source . . . . AN/GRC-122/142, vehicle power system or Generator PU-620
AN/VSC-2, vehicle power system or Generator PU-675( )
AN/VSC-3, vehicle power system or auxiliary power unit
Power Output . . . . 3A3A, 3A3J, 400 W peak-envelope power
0.1A1, 1.1A1, 200 W
Antenna . . . . . 4.57 m (15 ft) whip, or doublet AN/GRA-50
Tuning . . . . . Digital
Squelch . . . . . Noise
Type of Service . . . . . 3K00J3E (USB), 3K00R3E (USB), 100HA1A, 1K10A1A, and double-sideband AM (receive only)

AN/GRC-122
Radio Teletypewriter Set

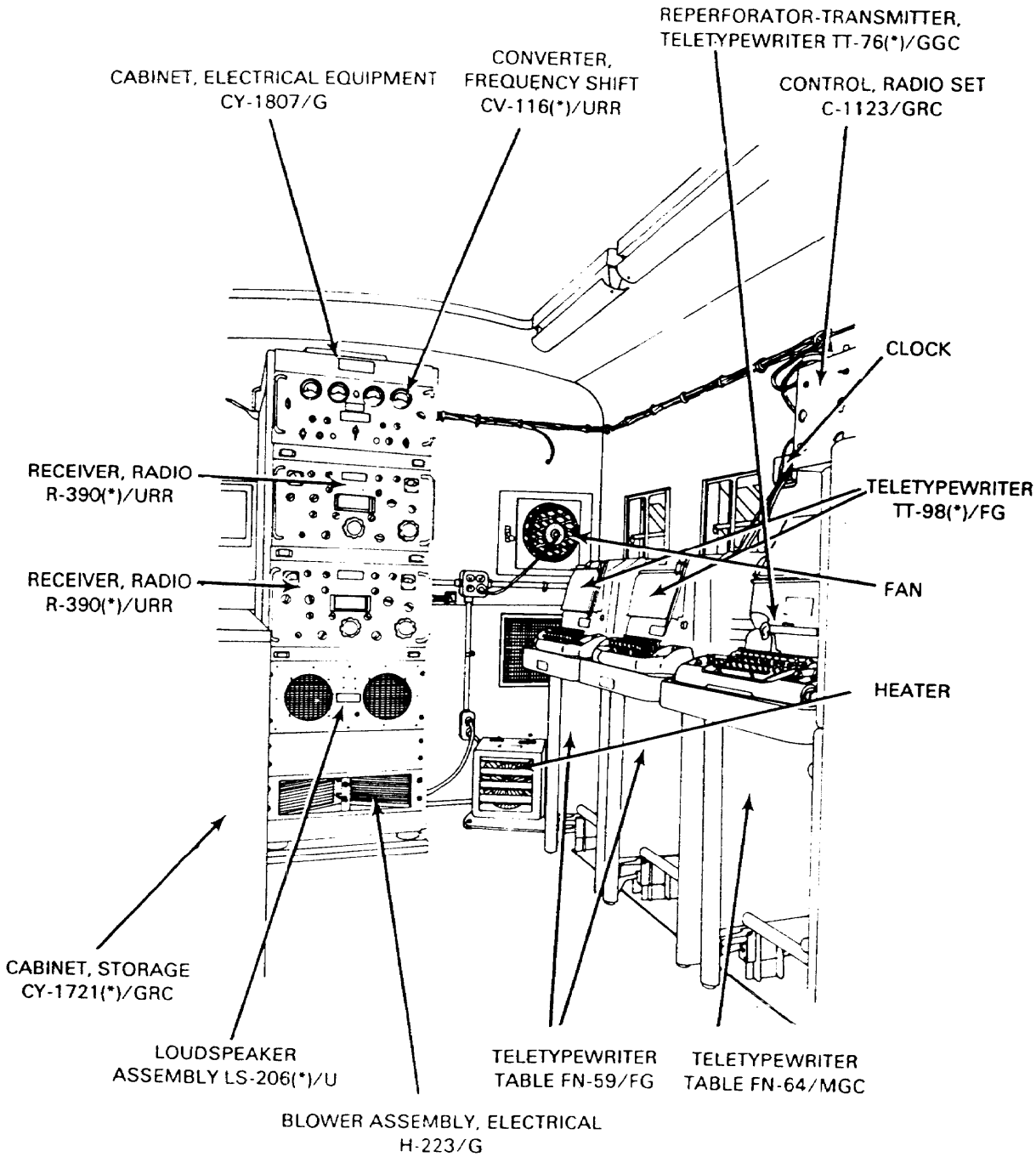

AN/GRC-122
Radio Teletypewriter Set (Cont.)

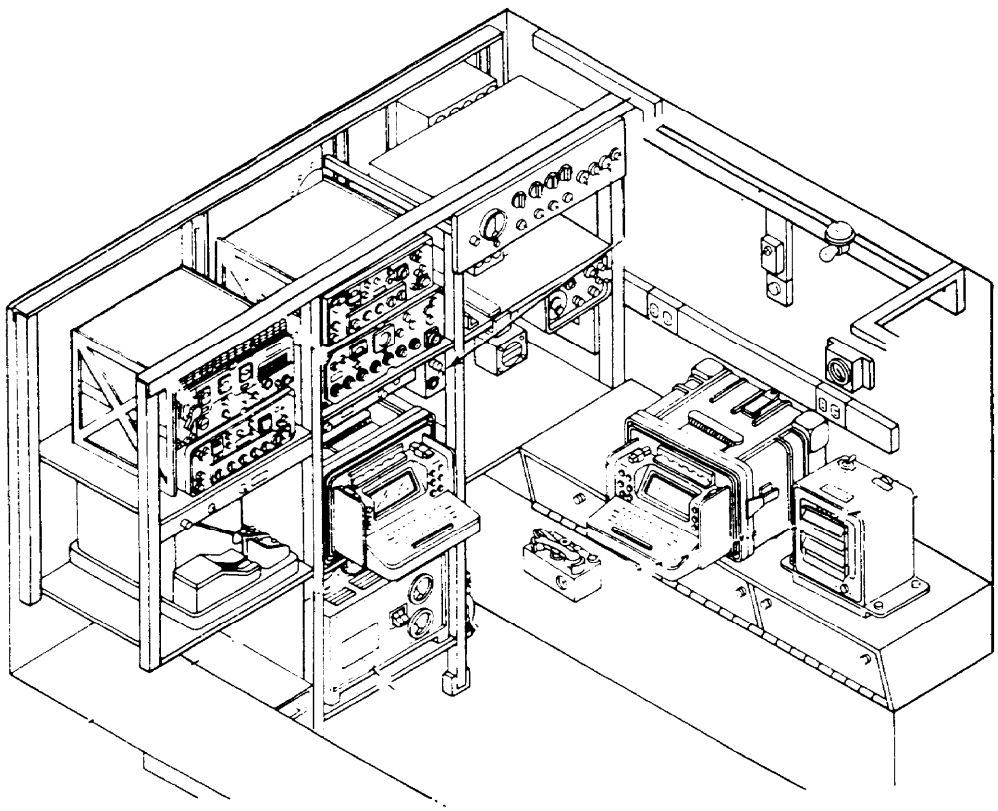

FRONT CURBSIDE VIEW

AN/VSC-2
Radio Teletypewriter Set

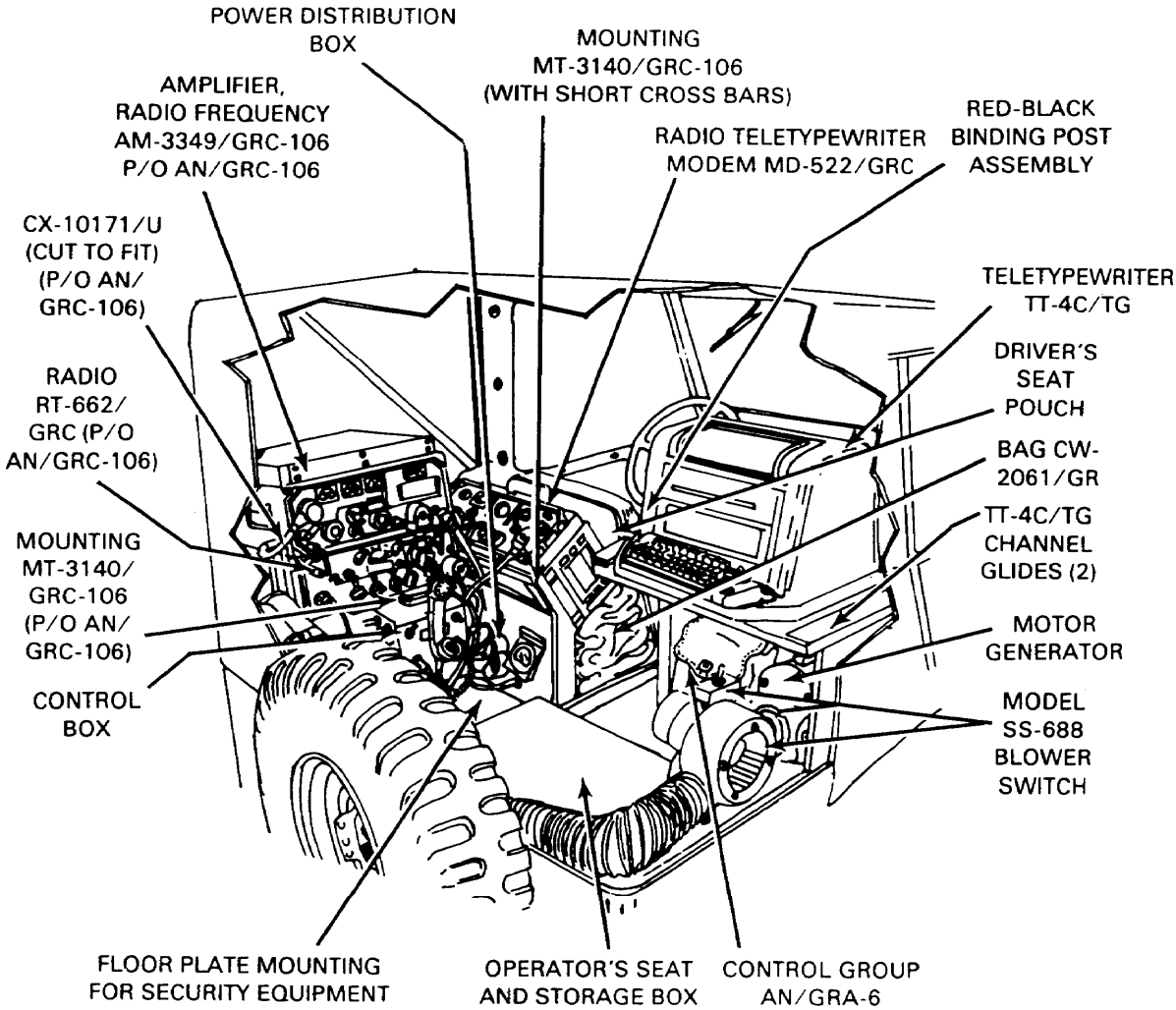

AN/VSC-3
Radio Teletypewriter Set

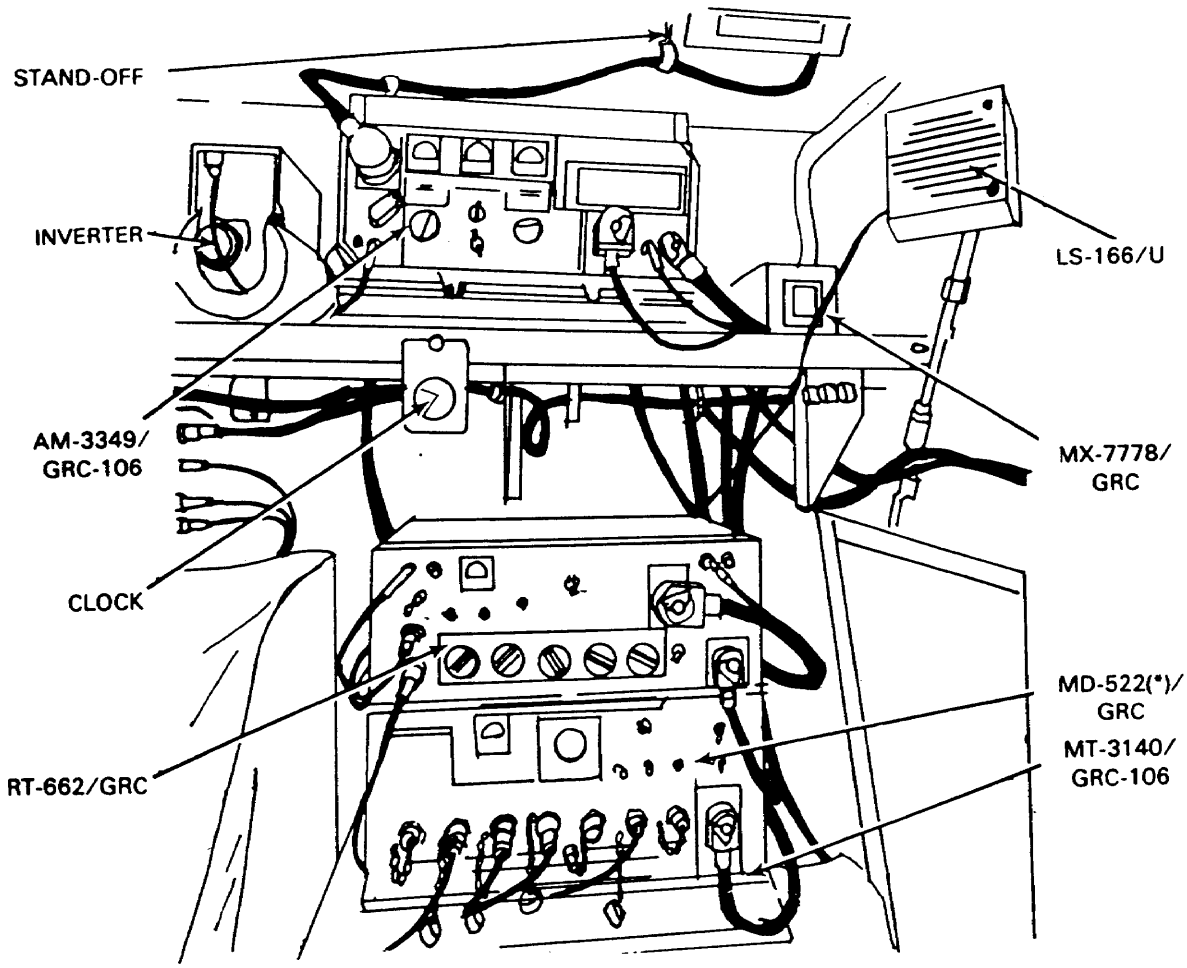

Section VIII. Communications Centers and Operations Centers

AN/GSQ-80, AN/GSQ-80A, and AN/GSQ-80B Message Centers

NSN: 9999-00-018-6793 (AN/GSQ-80)
9999-00-245-1840 (AN/GSQ-80A, AN/GSQ-80B)

Reference: TM 11-5895-365-15

General Information

The AN/GSQ-80 is an air- or vehicular-transportable message center. It contains facilities for the receiving, sorting, distributing, and temporary storage of messages, dispatches and packages.

Major Components

1 Shelter S-280/G (modified)
1 Intercommunications Station LS-147F/FI
1 Telephone Set TQA-312/PT

Technical Characteristics

Power Requirement ..... 115 V AC, 50 to 60 Hz
Power Consumption ..... 2,000 W
Weight ..... 1,180 kg (2,600 lb)
Vehicular Requirement ..... One 2 1/2-ton truck

AN/GSQ-80, AN/GSQ-80A, and AN/GSQ-80B Message Centers

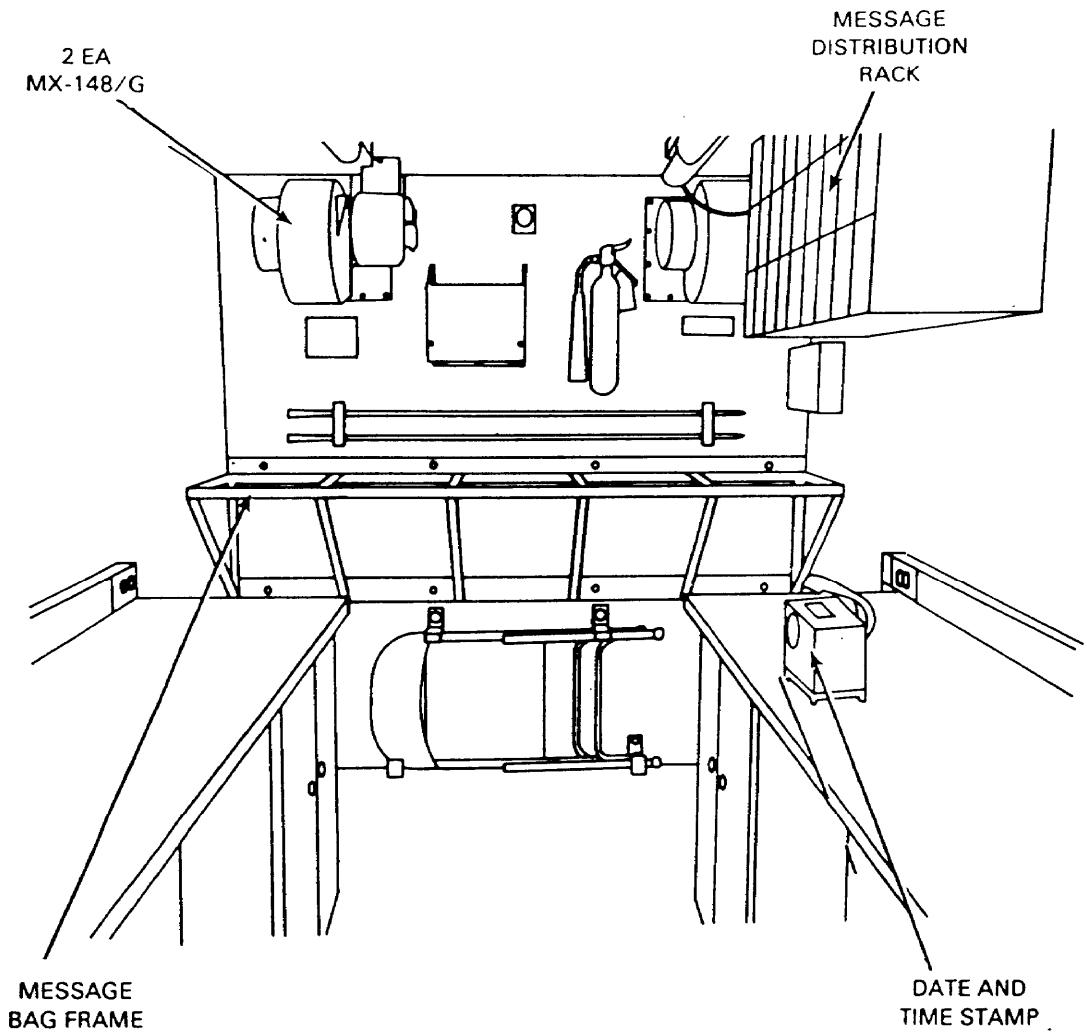

AN/MSC-25
Communications Operations Center

NSN: 5895-00-021-2088

Reference: TM 11-5895-227-15

General Information

The AN/MSC-25 is an air- or ground-transportable operations center. It provides facilities for local telephone circuits, telephone switching, teletypewriter circuits, and intercommunications within the local area. Provisions are available for the optional installation of radio equipment. The AN/MSC-25 includes display boards and overlay screens required by the signal officer to plan, engineer, and control area type communications systems.

Major Components

1 Van V-189/MSC-25 (modified M-348A2)
2 Telegraph Terminals TH-5/TG
7 Telephone Sets TA-312/PT
1 Switchboard SB-22/PT
1 Intercommunications Station LS-147F/FI
1 Teletypewriter TT-76/GGC
1 Teletypewriter TT-4A/TG

Technical Characteristics

Power Requirement . . . . . 115 V AC, 50 to 60 Hz
Power Consumption . . . . . 10,652 W
Weight . . . . . 5,902 kg (13, lb) approx
Vehicular Requirement . . . . . One 5-ton tractor

AN/MSC-25
Communications Operations Center

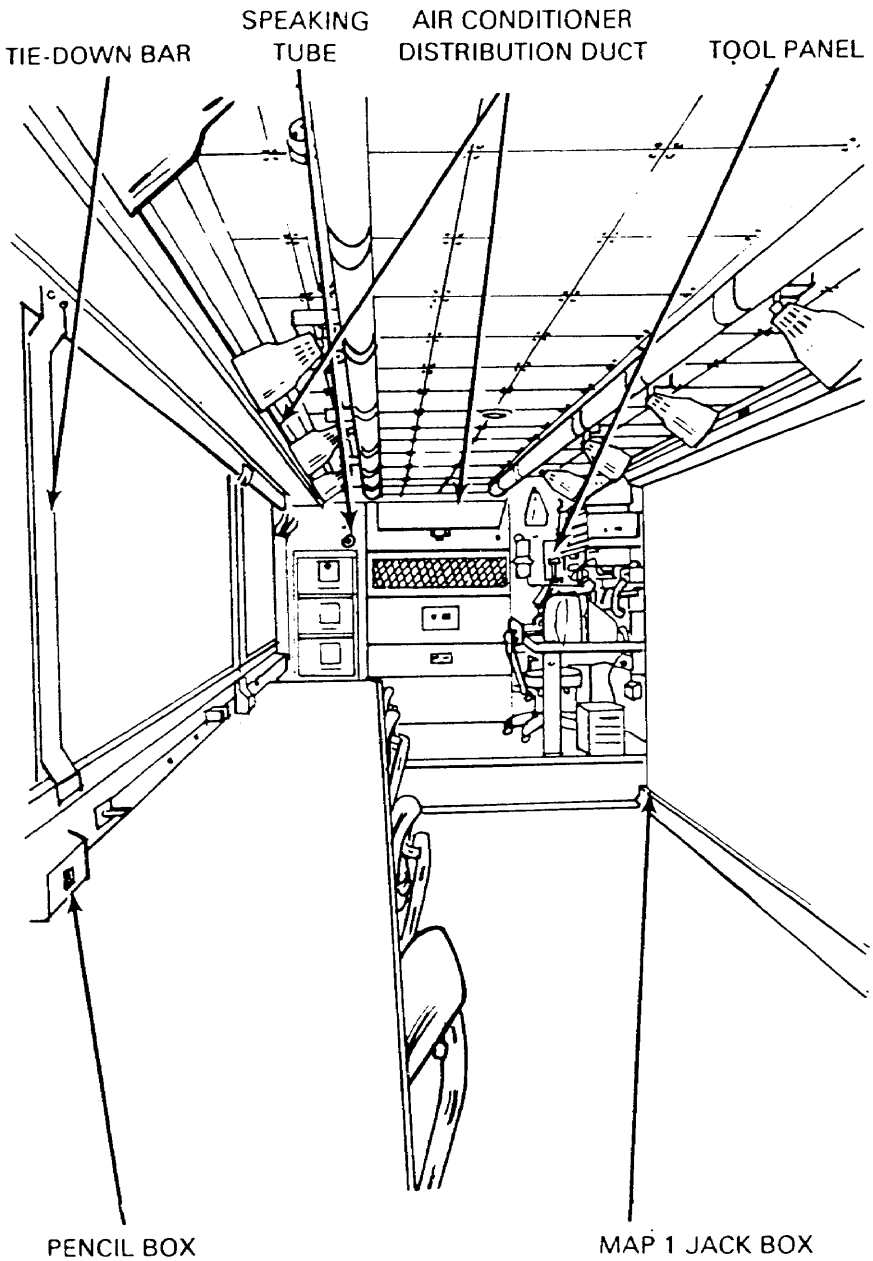

AN/MSC-31 and AN/MSC-31A Communications Operations Centers

NSN: 5895-00-167-7931 (AN/MSC-31)
5895-00-168-1569 (AN/MSC-31A)

Reference: TM 11-5895-223-15 (AN/MSC-31)
TM 11-5895-463-15 (AN/MSC-31A)

General Information

The AN/MSC-31 and AN/MSC-31A are air or vehicular-transportable field communications offices. Each includes a telephone switchboard, intercommunications equipment, and local telephone circuits. Drafting and display board facilities, required by the operations officer to plan, engineer, and control area type communications systems are provided. The AN/MSC-31 or AN/MSC-31A also provides for the optional installation of radio equipment. The AN/MSC-31 or AN/MSC-31A normally is used with operations Center AN/MSC-32A at corps and above signal centers.

Major Components

1 Shelter S-183/MSC-31 (modified S-141/G) or Shelter S-371/MSC-31A (modified S-280/G)
1 Radio Set AN/VRC-47 (AN/MSC-31A as required)
1 Radio Set AN/GRR-5 (AN/MSC-31A as required)
1 Switchboard SB-22/PT
1 Intercommunications Station LS-147F/FI
4 Telephone Sets TA-312/PT
1 Air Conditioner (AN/MSC-31A)

Technical Characteristics

Power Requirement . . . . . 115 V AC, 50 to 60 Hz
Power Consumption:
AN/MSC-31 . . . . . 3,542 W
AN/MSC-31A 4,639W
Weight:
AN/MSC-31 . . . . . 1,198 kg (2,639 lb)
AN/MSC-31A . . . . . 1,398 kg (3,080 lb)
Vehicular Requirement . . . . . One 2 1/2 ton truck

AN/MSC-31 and AN/MSC-31A Communications Operations Center

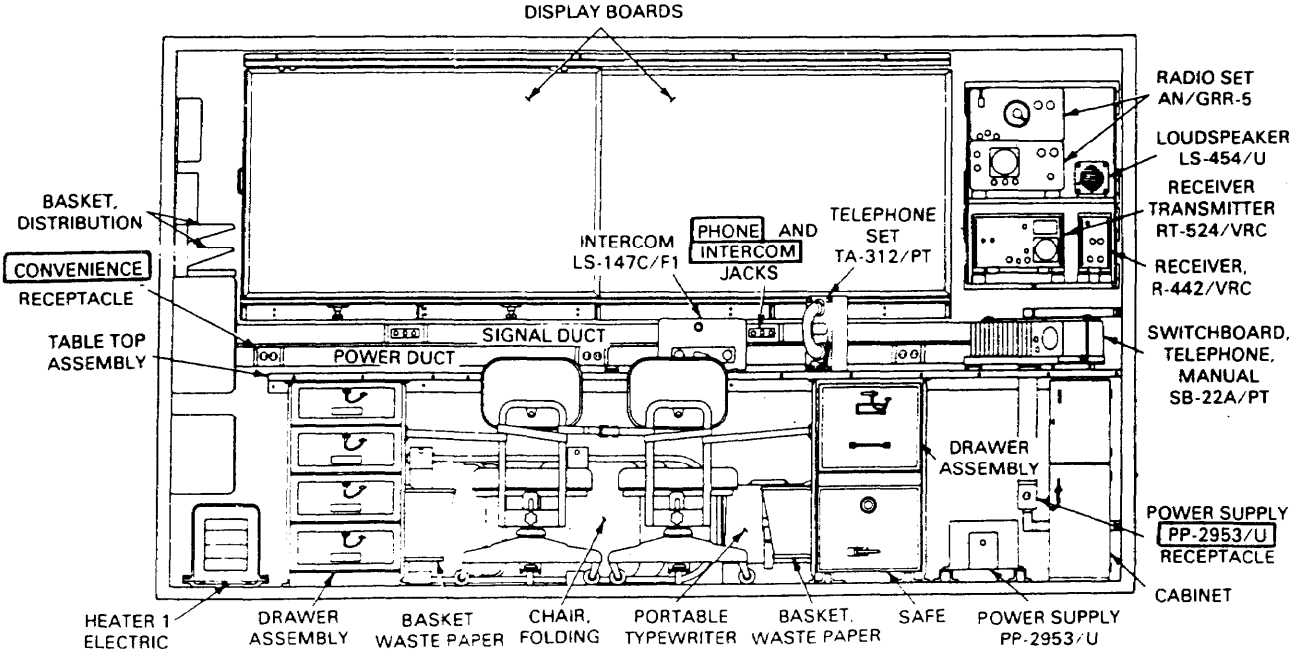

ROADSIDE

AN/MSC-32 and AN/MSC-32A Operations Centers

NSN: 5895-00-167-7932 (AN/MSC-32)
5895-00-168-1571 (AN/MSC-32A)

Reference: TM 11-5895-224-15 (AN/MSC-32)
TM 11-5895-464-15 (AN/MSC-32A)

General Information

The AN/MSC-32 and AN/MSC-32A are air- or vehicular-transportable field communications operations offices. Each contains a telephone switchboard, a teletypewriter, and local telephone circuits. Display board facilities, required by the operations offier to plan, engineer, and control an area type communications system, are provided. The AN/MSC-32A provides optional installation of radio equipment. The AN/MSC-32 or AN/MSC-32A is used with Operations Center AN/MSC-31 at corps and above signal centers. The AN/TYQ-31 replaces the AN/MSC-32 or AN/MSC-32A in units identified to receive the AN/TYQ-30 or AN/TYQ-31, CSCE.

Major Components

	-32	-32A
Shelter S-184/MSC-32	1	
Shelter S-372/MSC-32A		1
Switchboard SB-22/PT	1	1
Teletypewriter TT-4/TG	2	
Teletypewriter TT-98/FG		2
Teletypewriter TT-76/GGC	1	1
Telephone Set TA-312/PT	4	4
Telegraph Terminal TH-5/TG	3	
Intercommunications Station LS-147F/FI	1	1
Telegraph Terminal TH-22/TG		3
Air Conditioner, 9,000 BTU		1

Technical Characteristics

Power Requirement:
AN/MSC-32 . . . . . 115 V AC, 50 to 60 Hz
AN/MSC-32 . . . . . 115 V AC, 50 to 60 Hz
Power Consumption:
AN/MSC-32 . . . . . 4,292 W
AN/MSC-32A . . . . . 5,149 W
Weight:
AN/MSC-32 . . . . . 1,253 kg (2,761 lb)
AN/MSC-3A . . . . . 1,398 kg (3,080 lb)
Vehicular Requirement . . . . . One 2 1/2 ton truck

AN/MSC-32 and AN/MSC-32A Operations Centers

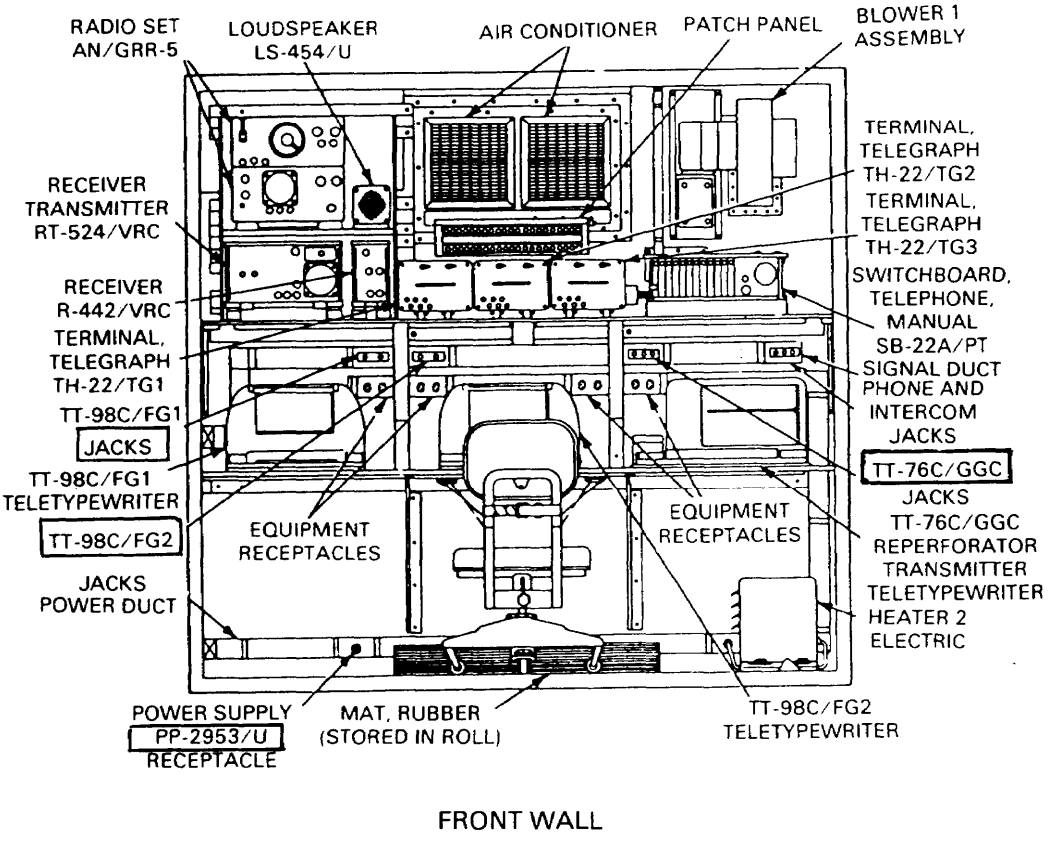

AN/TYQ-30(V) and AN/TYQ-31 Communications System Control Elements

NSN: 5895-01-280-3568 AN/TYQ-30(V)l
5895-01-280-3567 AN/TYQ-30(V)2
5895-01-281-6861 AN/TYQ-31

Reference: TM 11-5895-1392-12

General Information

The AN/TYQ-30(V) and AN/TYQ-31 Communications System Control Elements (CSCE) provide automated management/systems control of TRI-TAC networks. The CSCE gives the EAC network manager automated management facilities for planning the allocation, user, and operation of the deployed tactical communications network. An extensive network database monitors the network's status through reports received from subelements. The CSCE provides an automated facility for preparing and disseminating operation orders, telecommunications service orders, contingency plans, and other documents. The AN/TYQ-31(V)1 supports a signal brigade with an ADP shelter, an operations shelter, and a remote terminal cluster. The AN/TYQ-30(V)2 (single shelter) with a remote terminal cluster supports a signal battalion. The AN/TYQ-31 (single shelter) will be deployed with the AN/TTC-39A to be used by nodal management and technical control personnel. The CSCE will replace the AN/MSC-31 and AN/MSC-32.

Major Components

	TYQ-30(V)1 (ADP)	TYQ-30(V)1 (Operations)	TYQ-30(V)2	TYQ-31
Micro VAX II Computer	3		2	1
175-MB Disk Drives	6		3	2
Workstation VS-2000	2	4	2	2
VHF Radio VRC-46 or VRC-90 with KY-57	1	1		1
KY-68 DSVT	10	4	10	8
AN/UXC-7	1	1	1	1
Fiber Optic Extender	2	1	2	
Multiport Repeater	1		1	
DSDI	8		8	
TD-1235	1			
LS-147/F1	1		1	

Major Components (Cont.)

	TYQ-30(V)1 (ADP)	TYQ-30(V)1 (Operations)	TYQ-30(V)2	TYQ-31
Shelter S-280(C)/G	1	1	1	1
Remote Terminal Cluster		1	1	
Orderwire Control Unit				1

Technical Characteristics

Power Requirement:

Shelter . . . . . 120/208 V AC, +6% to -12%, 50/60 Hz 3% 3-phase
Portable . . . . . 115 V AC, 50/60 Hz

Organic Power:

AN/TYQ-30(V)1 . . . . . AN/MJQ-10 (20 each 30 kw)
AN/TYQ-30(V)2 . . . . . PU-406 (30 kW)
AN/TYQ- 31 . . . . . PU-406 (30 kW)
AN/TYQ-32 . . . . . Provided by the user

Prime Mover:

AN/TYQ-30(V)1 . . . . . 2 each 5-ton M-923
AN/TYQ-30(V)2 . . . . . 1 each 5-ton M-923
AN/TYQ-31 . . . . . 1 each 5-ton M-923
AN/TYQ-32 . . . . . Man-carried

Weight:

AN/TYQ-30(V) 1 . . . . . 2,863 kg (6,300 lb) (ADP shelter)
2,727 kg (6,000 lb) (operations shelter)
AN/TYQ-30(V)2 . . . . . 2,818 kg (6,200 lb)
AN/TYQ-31 . . . . . 2,636 kg (5,800 lb)

AN/TYQ-30(V)1
Shelter Layout (Automatic Data Processing Shelter)

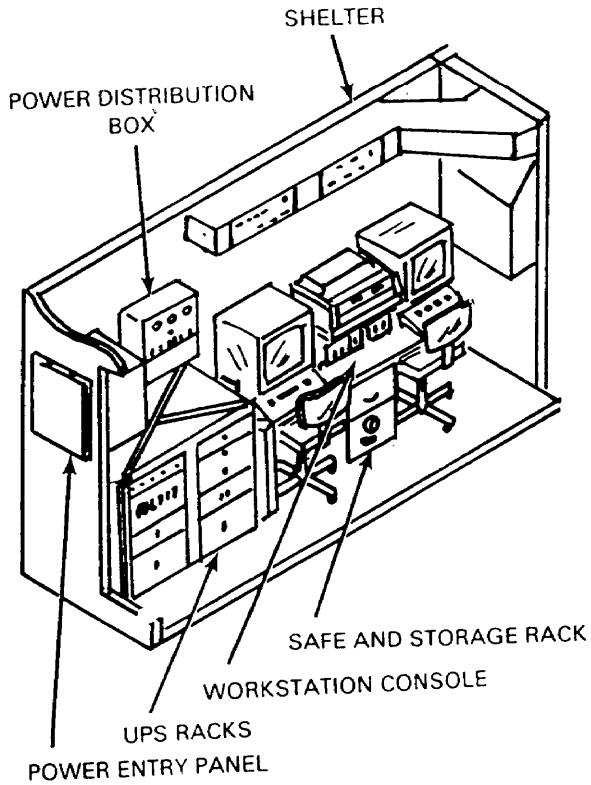

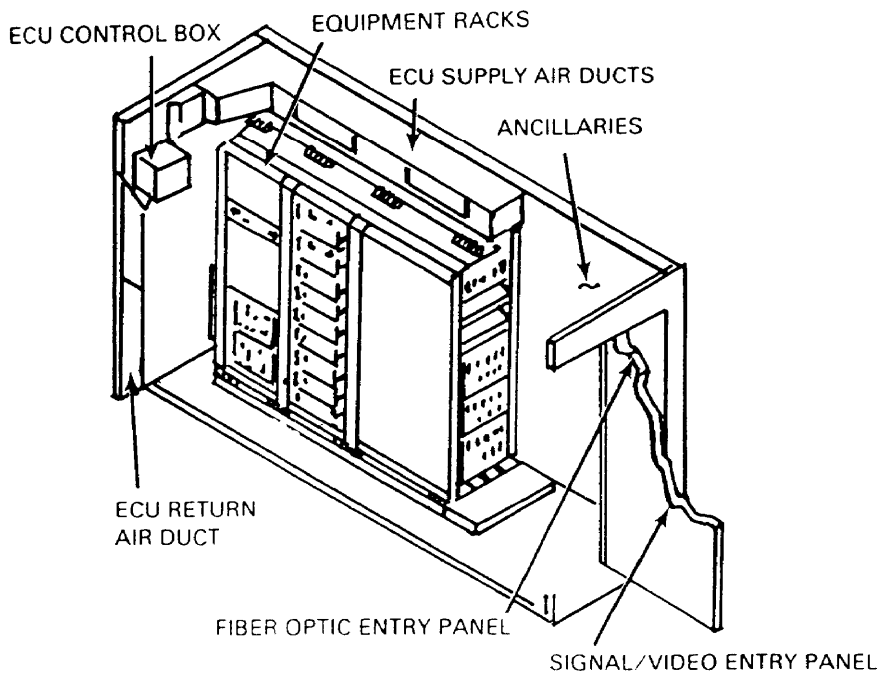

AN/TYQ-30(V)1
Shelter Layout (Operations Shelter)

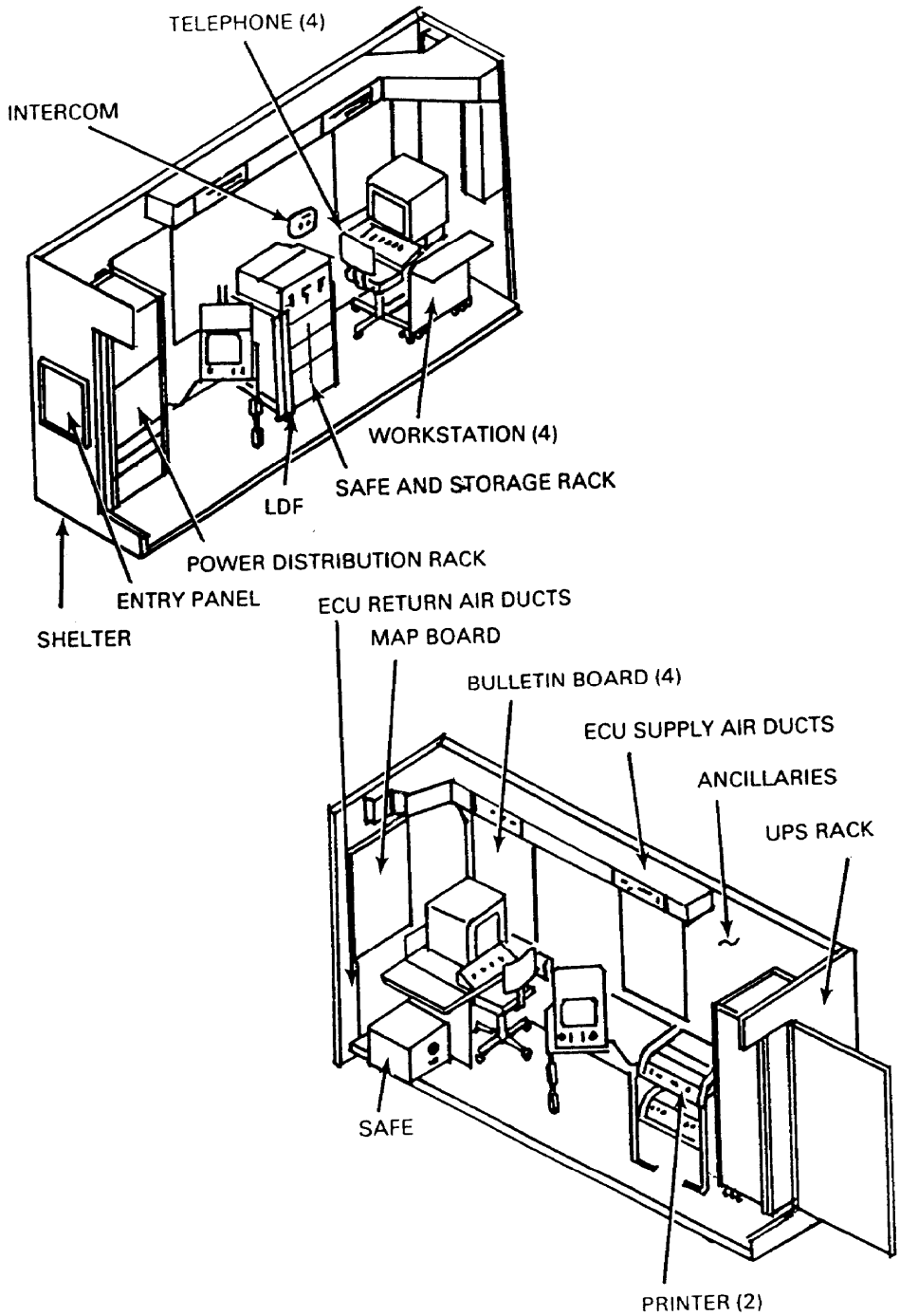

AN/TYQ-30(V)2 and AN/TYQ-31 Shelter Layout

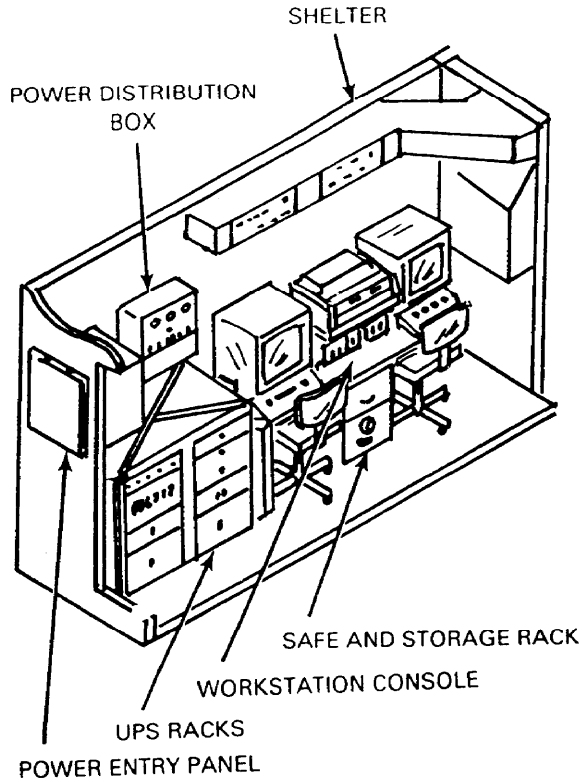

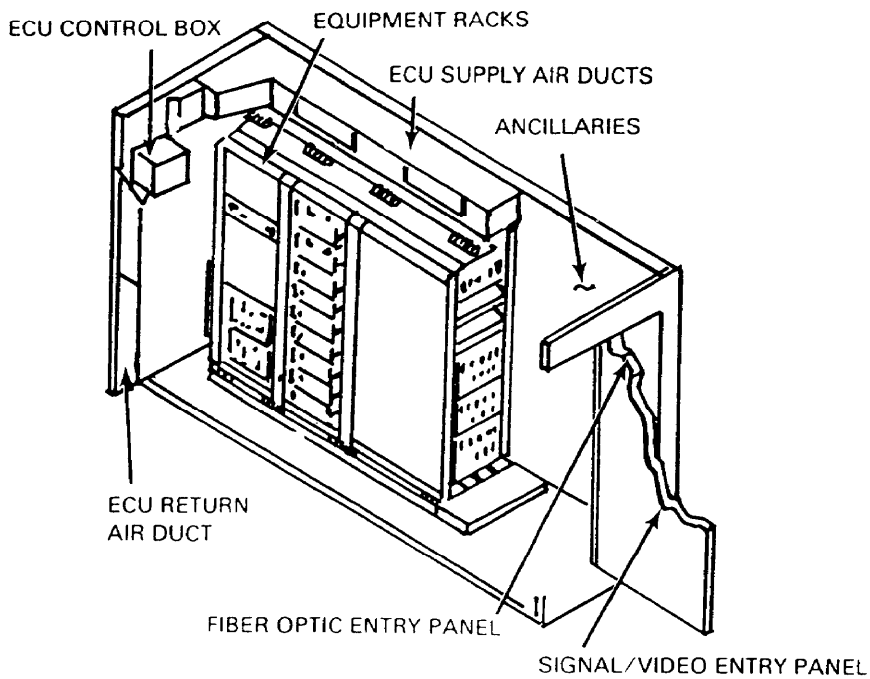

Section IX. Patch

AN/TSC-76
Communications Patching Center

NSN: 5895-00-168-1574

Reference: TM 11-5805-583-15

General Information

The AN/TSC-76 is an air- or vehicular-transportable communications patching center used to provide an audio technical control facility for use in a division communications system. The AN/TSC-76 provides facilities for patching, testing, and monitoring telephone circuits and VF teletypewriter circuits. It can handle 572 two-wire circuits. It is used at division level in an area communications system.

Major Components

1 Electrical Equipment Shelter S-403/TSC-76 (modified S-250/G)
1 Teletypewriter TT-98/FG
1 Telegraph Terminal TH-22/TG
1 Intercommunications Station LS-147F/F1
1 Manual Telephone Switchboard SB-22A/PT
2 Distribution Boxes J-1077A/U
1 Telephone Set TA-312/PT

Technical Characteristics

Power Requirement	115 V AC, 50 to 60 Hz
Power Consumption	3,500 W
Weight	999 kg (2,200 lb)
Vehicular Requirement	One 1 1/4 ton-truck

AN/TSC-76
Communications Patching Center

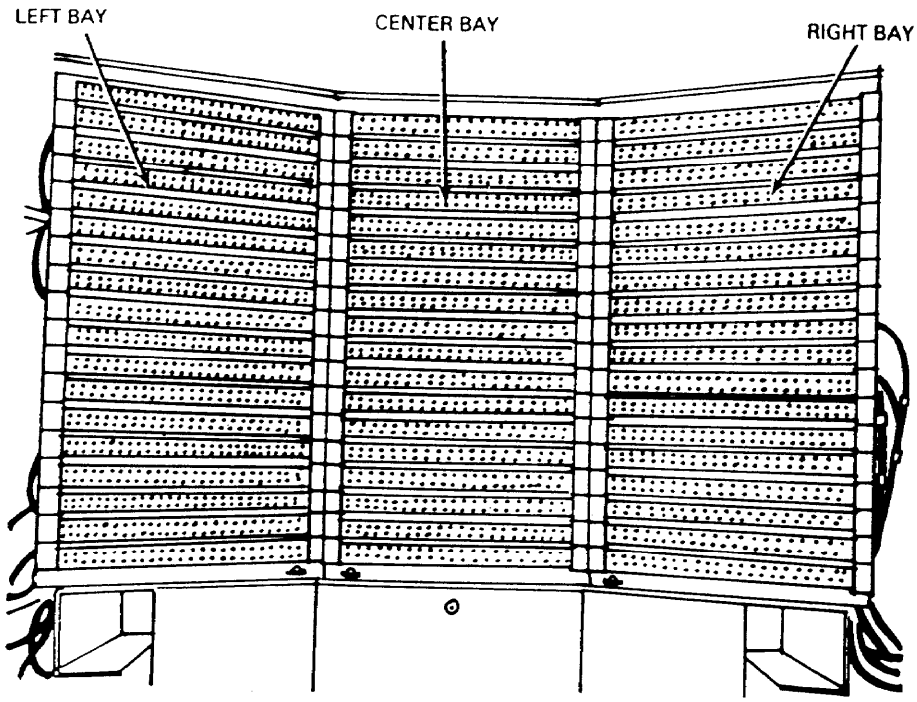

PATCHING PANEL CLOSED FOR OPERATION A

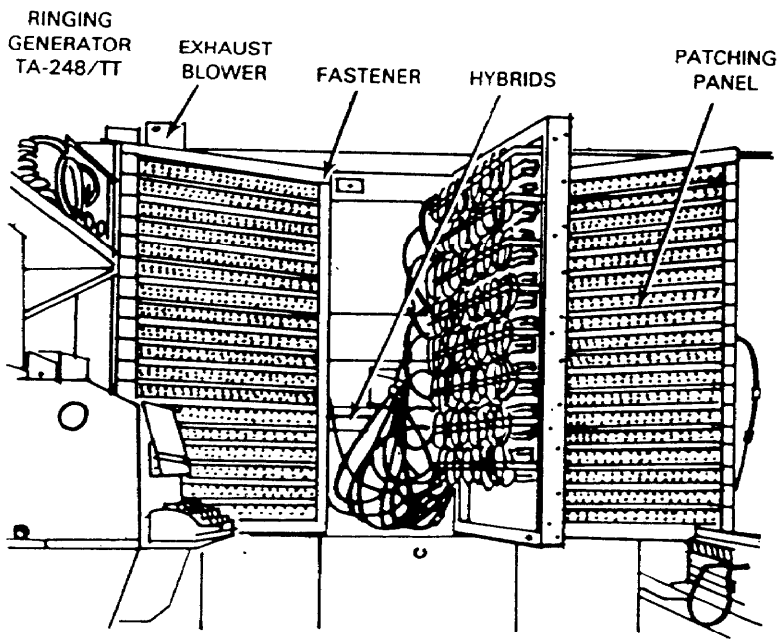

PATCHING PANEL CENTER BAY OPEN FOR MAINTENANCE B

AN/TSQ-84
Communications Technical Control Center

NSN: 5895-01-007-4788

Reference: TM 11-5895-799-14

General Information

The AN/TSQ-84 is an air- or vehicular-transportable technical control center used to interconnect, test, and interface various types of communications systems. It can terminate, interface, patch, and test both voice and digital circuits. The AN/TSQ-84 has line conditioning equipment to permit interconnections with the DCS and the commercial systems. It also has the capability of 432 four-wire circuits. It will perform all functions of the SB-675/MSC, plus the additional functions inherent in its design.

Major Components

1 Electrical Equipment Shelter S-538/TSQ-84 (modified S-280/G)
2 Manual Switchboards SB-22/PT
1 Telegraph Test Set AN/GGM-15
1 Telephone Set TA-312/PT
2 Air conditioners
1 Telephone Set TA-341/TT
20 Line Amplifiers AM-6120/TSC-62
1 Telegraph Terminal TH-22/TG
1 Telephone Test Set AN/USM-181A
9 Line Equalizers TA-957/G
1 Teletypewriter TT-119/FG
1 Oscilloscope AN/USM-296A
2 Intercommunications Stations LS-147F/FI
1 Reperforator-Transmitter TT-178/FG

Technical Characteristics

Power Requirement . . . . . 115 and 230 V AC, 50 to 60 Hz
Power Consumption . . . . . 8,100 W
Weight . . . . . 2,633 kg (5,800 lb)
Vehicular Requirement . . . . . One2 1/2ton truck

AN/TSQ-84
Communications Technical Control Center

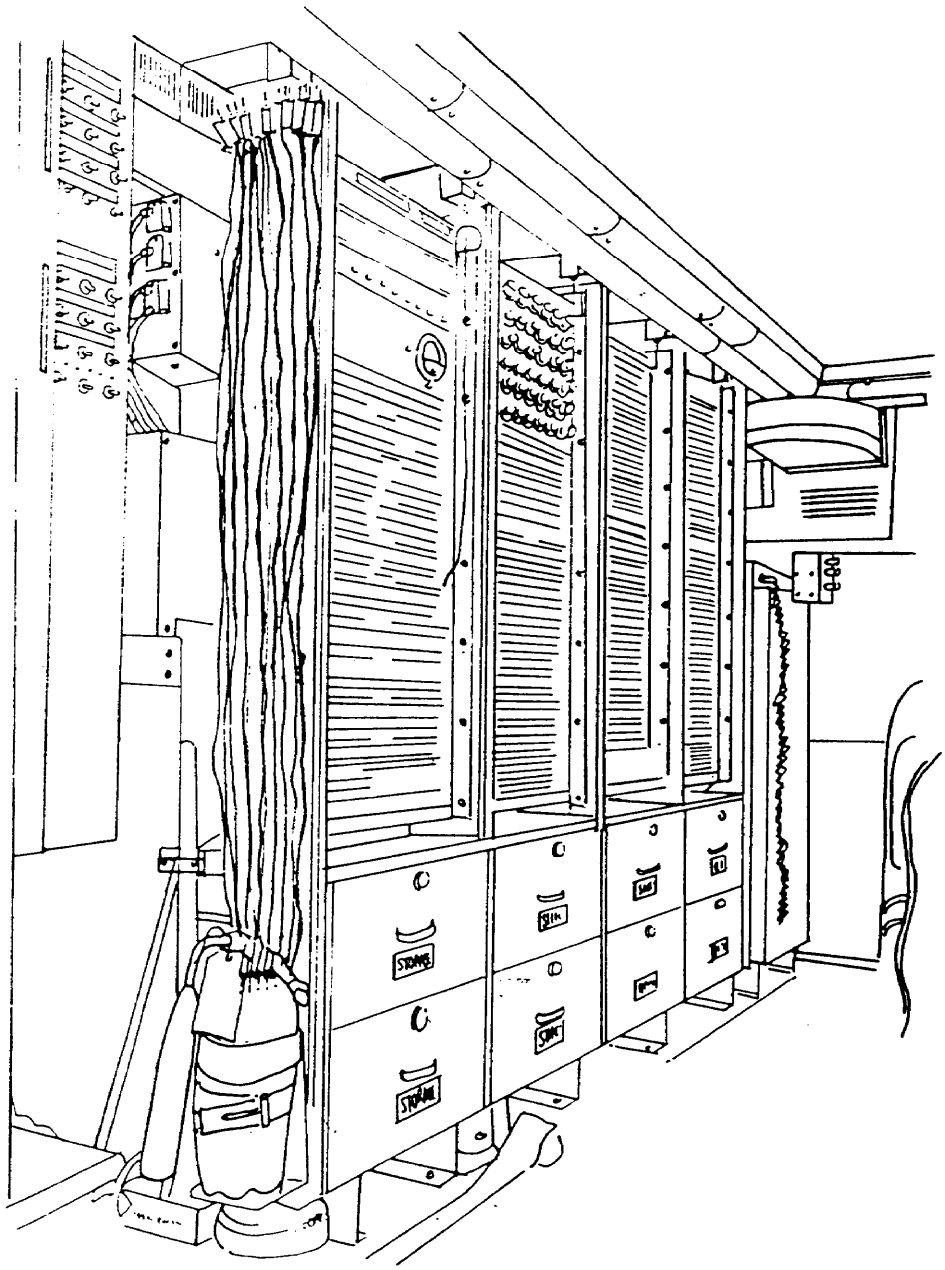

ROADSIDE

AN/TSQ-84
Communications Technical Control Center
(Cont.)

CURBSIDE

AN/TSQ-84
Communications Technical Control Center
(Cont.)

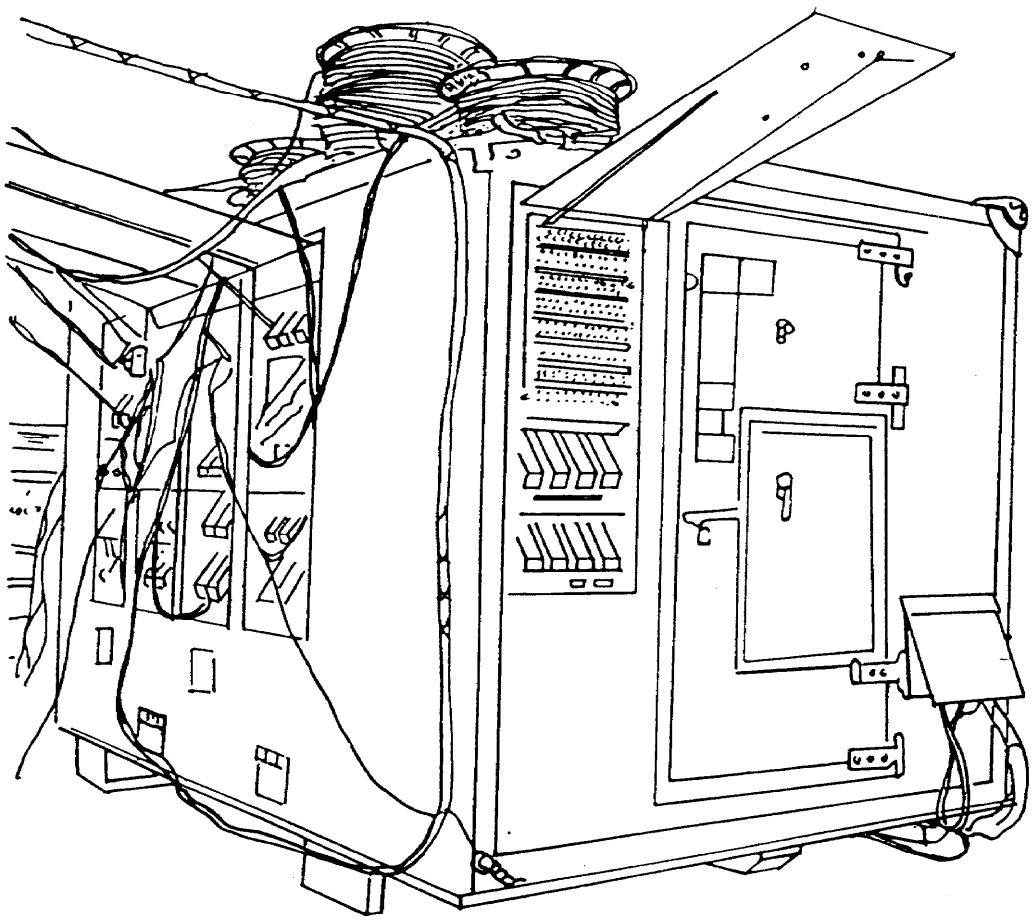

OUTSIDE REAR
VIEW

SB-675/MSC and SB-675A/MSC Communications Patching Panels

NSN: 5805-00-167-7882 (SB-675/MSC)
5805-00-168-1548 (SB-675A/MSC)

Reference: TM 11-5895-225-15 (SB-675/MSC)
TM 11-5895-225-15-1 (SB-675A/MSC)

General Information

The SB-675/MSC and SB-675A/MSC are air- or vehicular-transportable communications patching facilities used to provide a circuit control facility for use in the corps area communications system. Each provides facilities for patching, testing, and monitoring telephone circuits and VF or DC teletypewriter circuits. Each can handle 468 two-wire circuits.

Major Components

	SB-675	SB-675A
Electrical Equipment Shelter S-189/MSC (modified S-141/G)	1	
Electrical Equipment Shelter S-404/MSC (modified S-280/G)	1	
Manual Telephone Switchboard SB-22()/PT	1	1
Telegraph Terminal TH-5/TG or TH-22/TG	1	
Telegraph Terminal TH-22/TG		1
Telephone Set TA-312/PT	1	2
Teletypewriter TT-4A/TG	1	
Teletypewriter-98/FG		1
Test Set TS-140/PCM consisting of: Signal Generator SG-15/PCM and Decibel Meter ME-22/PCM		1
Air Conditioner, 9,000 BTU		1
Intercommunications Station LS-147F/FI		1

Technical Characteristics

Power Requirement . . . . . 115 V AC, 50 to 60 Hz
Power Consumption:
SB-675/MSC . . . . . 3,832 W
SB-675A/MSC 6,325W
Weight:
SB-675/MSC . . . . . 1,200 kg (2,644 lb)
SB-675A/MSC . . . . . 1,725 kg (3,800 lb)
Vehicular Requirement . . . . . One 2 1/2 ton truck

SB-675/MSC and SB-675A/MSC Communications Patching Panels

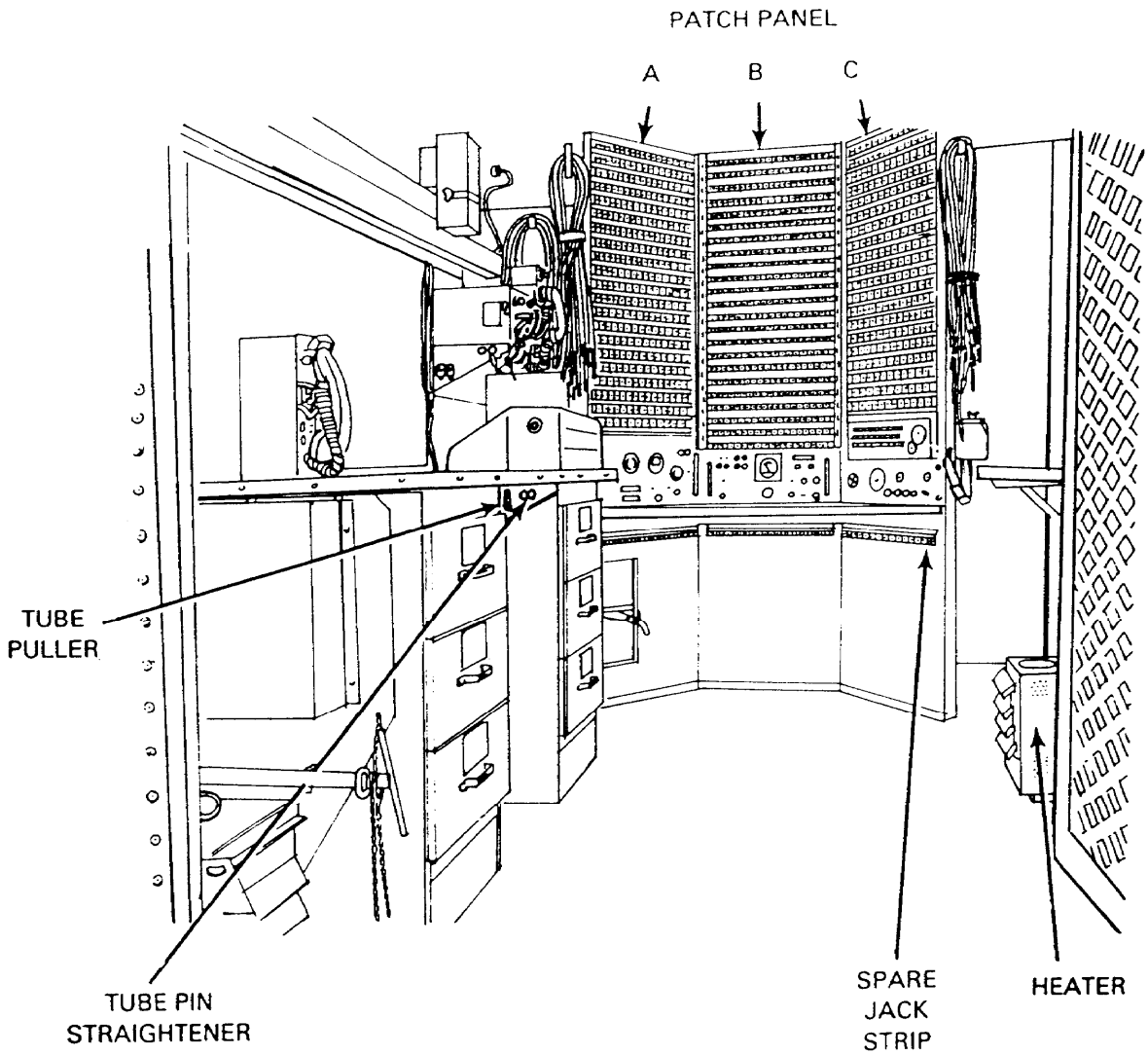

Chapter 7 Mobile Subscriber Equipment

	Page
General Information	7-2
Section I. System Control Center-2	7-3
OL-490/TYQ-46(V) Management/Planning Shelter	7-3
OL-489/TYQ-46(V) Technical Shelter	7-5
Section II. Node Center	7-7
AN/GRC-224(P) Radio Set	7-7
AN/TRC-191 Radio Access Unit	7-9
AN/TSQ-154 and AN/TSQ-154A(V)1 Node Management Facility	7-12
AN/TTC-47 Node Center Switch	7-14
Section III. Large Extension Node	7-21
AN/TTC-46, AN/TTC-46A(V)1, AN/TTC-46B(V)1 and AN/TTC-46C(V)1 Large Extension Node Switches	7-21
Section IV. Small Extension Node	7-28
AN/TTC-48(V) Small Extension Node Switch	7-28
Section V. Subscriber Terminal Equipment	7-34
AN/VRC-97 Mobile Subscriber Radiotelephone Terminal	7-34
Section VI. Line-Of-Sight Multichannel Radio Terminals	7-37
AN/TRC-190(V) Line-of-Sight Multichannel Radio Terminal	7-37
Section VII. Mobile Subscriber Equipment Contingency Communications	7-45
AN/TTC-50 Communications Central	7-45
AN/TTC-51 Communications Switching Set	7-48
AN/TRC-198(V)1 and AN/TRC-198(V)2 Line-of-Sight Multichannel Radio Terminal	7-51

General Information

MSE provides rapid, secure communications and has replaced the existing mix of INTACS and ATACS communications equipment in the corps and division. It is designed to meet the requirements of a five division corps for a mobile, flexible, reliable, and survivable common-user area communications system. MSE system features meet the needs of the commander who conducts operations in war and operations other than war. MSE's six functional areas provide a self-organizing network that includes automatic affiliation, deducible telephone numbering, and flood search routing techniques. These six functional areas are:

• Subscriber terminal—consisting of telephones, facsimile terminals, and interface for data subscribers.

• Mobile subscriber access—consisting of a mobile subscriber radio telephone terminal (MSRT) that is equipped with a telephone terminal, a VHF radio, a data interface capability, and possibly with a facsimile terminal.

• Wire subscriber access—consisting of large extension node (LEN) switches and small extension node (SEN) switches to be deployed at a call service position (CPS) to service static (wire) subscribers.

• Area coverage—consisting of a node center (NC) switch, a radio access unit (RAU), and associated LOS assemblages which provide a tandem switched network and the interface between the mobile subscriber access and wire subscriber access functional areas.

• System control—consisting of an automatic planning and management capability for MSE (including current system status).

• Packet network—consistingof packet switches in a system control center-2 (SCC-2), NCS, LEN, and SEN for data distribution.

MSE communications assemblages are in an S-250( )/G shelter mounted on an M-1037 high mobility multipurpose wheeled vehicle (HMMVW). The HMMWV can be transported by rail, ship, or air. All ancillary equipment (such as antennas, masts, cables, or reels) is mounted in or on the shelters or associated trailers.

A communications assemblage's 30-minute set-up tear-down time enhances the mobility of MSE. Using back-up batteries provided in every shelter to power the systems for 10 to 15 minutes can reduce this time. The batteries are charged/recharged by the generator or the 200-amp kit contained in the HMMWV.

Section I. System Control Center-2

OL-490/TYQ-46(V)
Management/Planning Shelter

NSN: 5805-01-326-7331

Reference: TM 11-5895-1498-12-1

General Information

The OL-490/TYQ-46(V) consists of an S-250E shelter transported on an M-1037 HMMWV. The management/planning shelter contains two workstations that provide computer assisted tools to aid in network management and is identical at corps and division. The corps SCC-2, however, includes two management/ planning shelters, while the division SCC-2 has only one.

Major Components

1 Shelter S-250( )/G
2 SCS Workstations AN/UYK-86
1 Environmental Control Unit
2 DNVTs TA-1035/U
1 Intercommunications Station LS-147
1 Printer
1 Cargo Trailer
2 Transceivers*
1 Generator PU-751/M, 5 kw

***III Corps TYQ-46's are equipped with three transceivers**

Technical Characteristics

Power Requirements . . . . . 117 V AC, 60 Hz, single phase
28 V DC (batteries or vehicle alternator)

OL-490/TYQ-46(V) Management/Planning Shelter

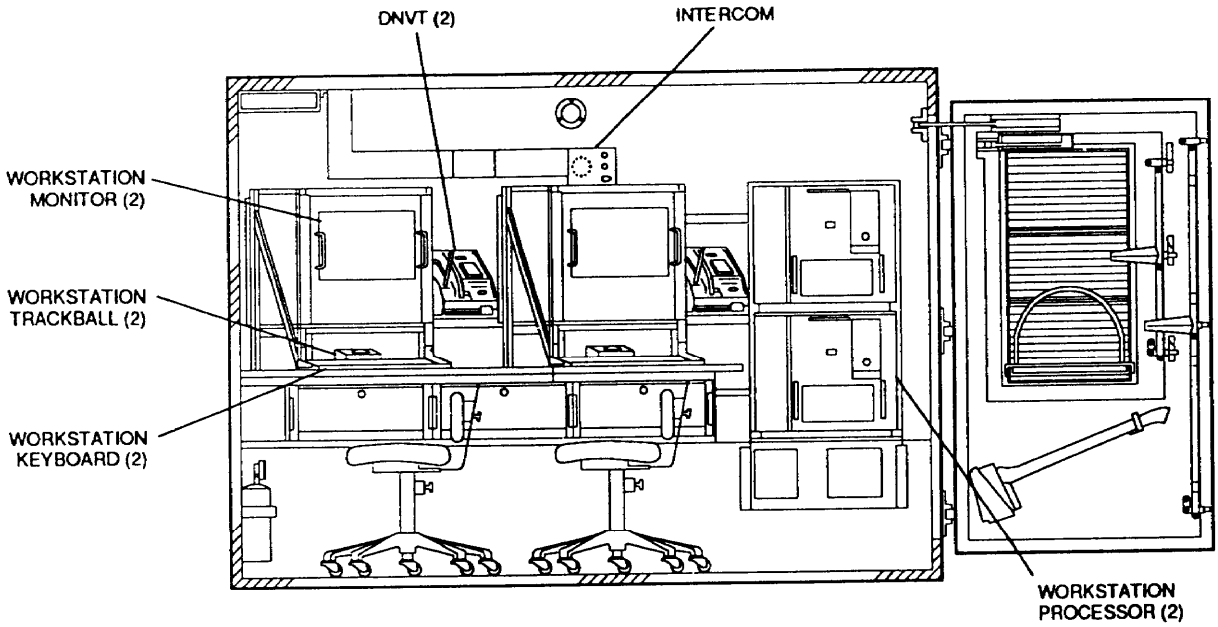

CURBSIDE

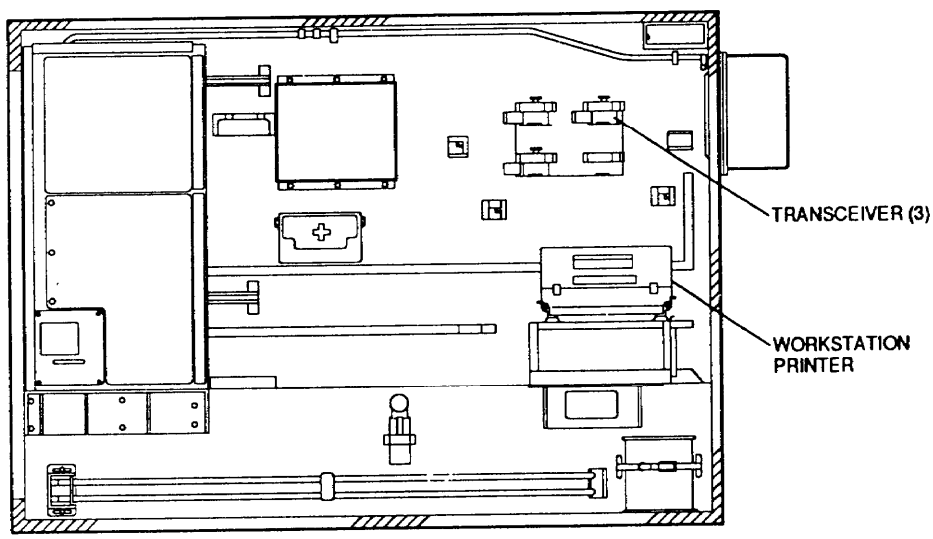

ROADSIDE

OL-489/TYQ-46(V)
Technical Shelter

NSN: 5805-01-326-6539

Reference: TM 11-5895-1498-12-1

General Information

The OL-489/TYQ-46(V) consists of an S-250E shelter transported on an M-1037 HMMWV. It includes the processing suite (processor, memory, disk memory, magnetic tape, drives, and control unit) and the network communications interface equipment. The technical shelter provides all of the processor functions required of the SCC-2. This shelter will be deployed at both corps and division SCC-2s.

Major Components

1 Shelter S-250( )/G
1 Intercommunications Station LS-147
1 Environmental Control Unit
1 Communications Switching Set AN/TYC-20
1 DNVT TA-1035/U
1 SCS Workstation AN/UYK-86
4 Transceivers
1 Communications Modem MD-1270
2 Node Management Center (NMC) Workstations AN/UYK-86
1 Load Disk
1 Printer
1 Generator PU-753/M, 10 kW

Technical Characteristics

Power Requirement . . . . . 117 V AC, 60 Hz, single phase
28 V DC (batteries or vehicle alternator)

OL-489/TYQ-46(V) Technical Shelter

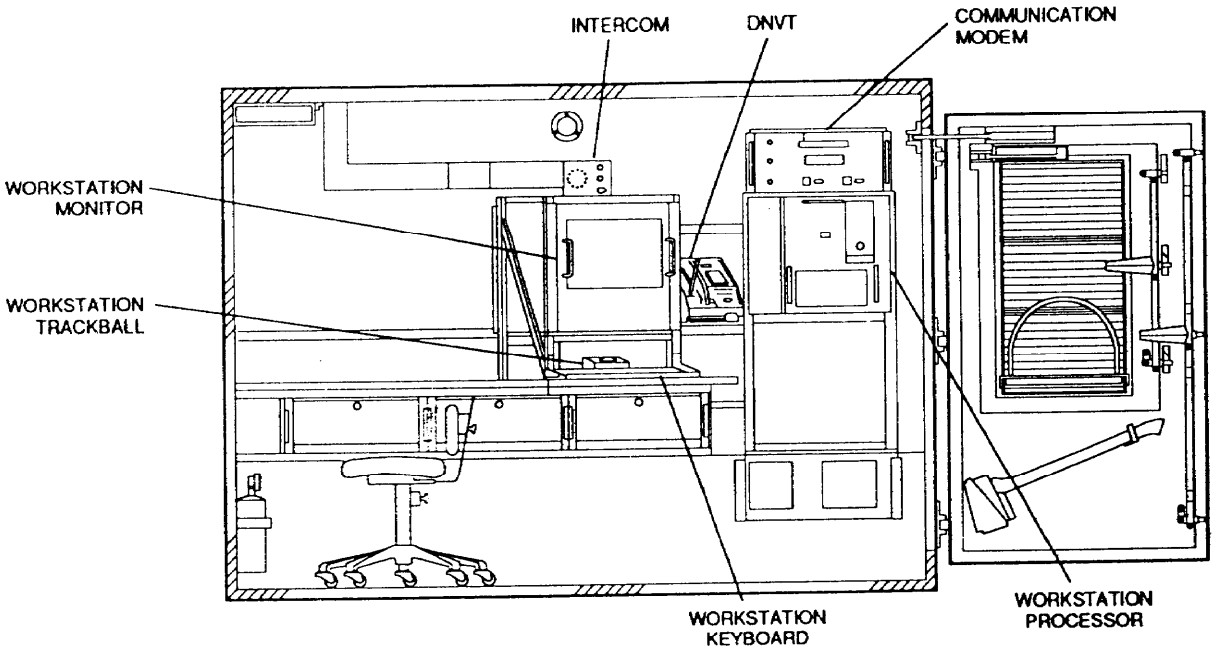

CURBSIDE

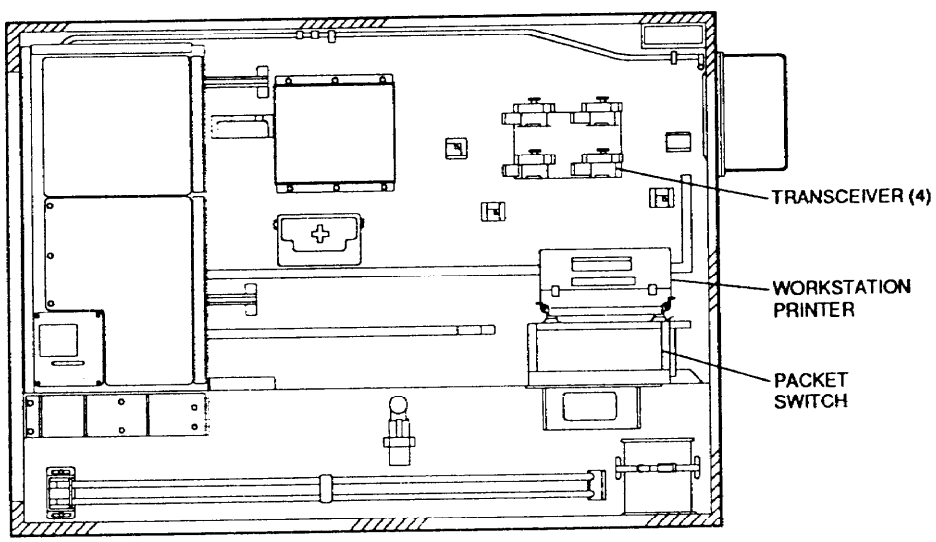

ROADSIDE

Section II. Node Center

AN/GRC-224(P)
Radio Set

NSN: 5820-01-250-6254

Reference: TM 11-5820-1024-13

General Information

The AN/GRC-224(P) consists of an RF unit and a control unit. The RF unit includes a receiver and transmitter mounted on the two feet diameter parabolic reflector antenna. The control unit is a throw-on-the-ground component or can be mounted in the AN/TRC-190(V), (V)1, (V)3, (V)4, and MSE switching assemblages. The radio set provides intra-nodal connectivity between the switch and LOS assemblages and reduces the RF signature at the command post (CP) location by using down-the-hill (DTH) application. The radio set offers convenient flexibility for simple and efficient network planning and frequency management. The operating frequency range is 14,50 to 15.35 GHz divided into ten subbands. Transmit and receive frequencies in each subband can be selected independently from between 29 (C/F Band) to 49 (L/M Band) possible radio channels, depending on the chosen frequency plan.

Major Components

1 Control Module Subassembly C-11826/GRC-224
1 Antenna Mast AB-1342/GRC-224, 9 meters
1 RF Module/Antenna Subassembly RT-1540/GRC-224
1 Signal Cable Assembly
1 DC Power Cable Assembly
1 High Voltage Amplifier (HVA)
1 AC Power Cable Assembly

Technical Characteristics

Power Requirements . . . . . 28 V DC
Frequency Range . . . . . 14.50 to 15.35 GHz
Transmission Range . . . . . 2 to 5 km or 1.2 to 3.1 miles
TDM Data Rates . . . . . 256, 512, 1024 and 4096 kb/s

NOTE: This radio set is at the LEN, SEN, and NC.

AN/GRC-224(P) Radio Set

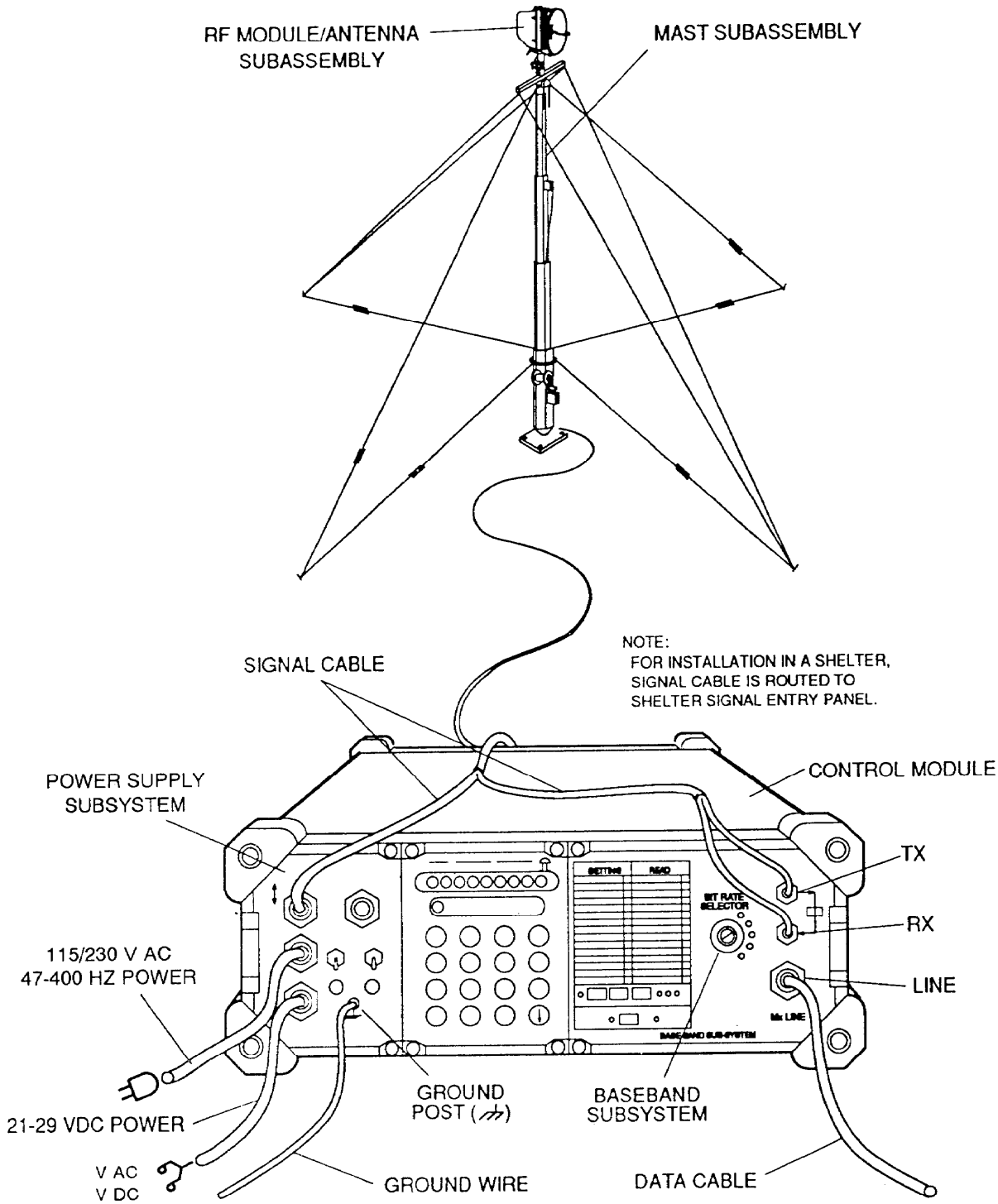

AN/TRC-191
Radio Access Unit

NSN: 5820-01-247-5731

Reference: TM 11-5820-1022-13-1

General Information

The AN/TRC-191 consists of an S-250/G shelter transported on an M-1037 HMMWV. It has a capacity of eight simultaneous calls via the eight radios which are elements of the assemblage. The RAU is an automatic interface between the mobile subscribers and the network. It does not include any switching element but ensures full management of the radio channels including traffic load controls from radio to network. The RAU also interfaces to an NC switch of the MSE system using either LOS radio links or direct cable connection.

Major Components

1 Shelter S-250( )/G
1 Group Modem MD-1026
1 Electronic Transfer Device KYK-13
1 Generator PU-751/M, 5 kW
1 Trunk Encryption Device KG-194A
1 VINSON COMSEC Equipment KY-57
1 RF Fill Device
1 Group Logic Unit C-11865
1 Antenna Cable
1 RF Antenna Multicoupler CU-2391
1 Junction Box J-4534 (III Corps)
8 Radio Transceivers RT-1539
1 Antenna Mast Mounted AS-4225 (used with 15 meter mast)
1 AC Power Cable, 15 feet
1 AC Power Cable, 35 feet
1 Vehicular Antenna AS-3885 (whip)
1 DC Power Cable
1 MSRT Power Cable
1 DSVT KY-68
1 MSRT Mode Cable
1 Whip Antenna (W6) Cable

Major Components (Cont.)

1 Digital Data Modem MD-1231, (III Corps Only)
1 Orderwire Control Unit C-11878, (III Corps Only)
1 Loop Group Multiplexer TD-1426 (III Corps Only)
1 Antenna Mast AB-1339/G, 15 meters

Technical Characteristics

Power Requirements . . . . . 115 V AC, 50 or 60 Hz, single phase, or 28 V DC

Frequency Range* . . . . . 30 to 35 MHz (low band, training)
40 to 50 MHz (high band, training)
30 to 51 MHz (low band, operational)
50 to 88 MHz (high band, operational)

Transmission Range (Planning) . . . . . 15 km or 9.3 mi

*** The RAU transmits in high band and receives in low band.**

AN/TRC-191
Radio Access Unit

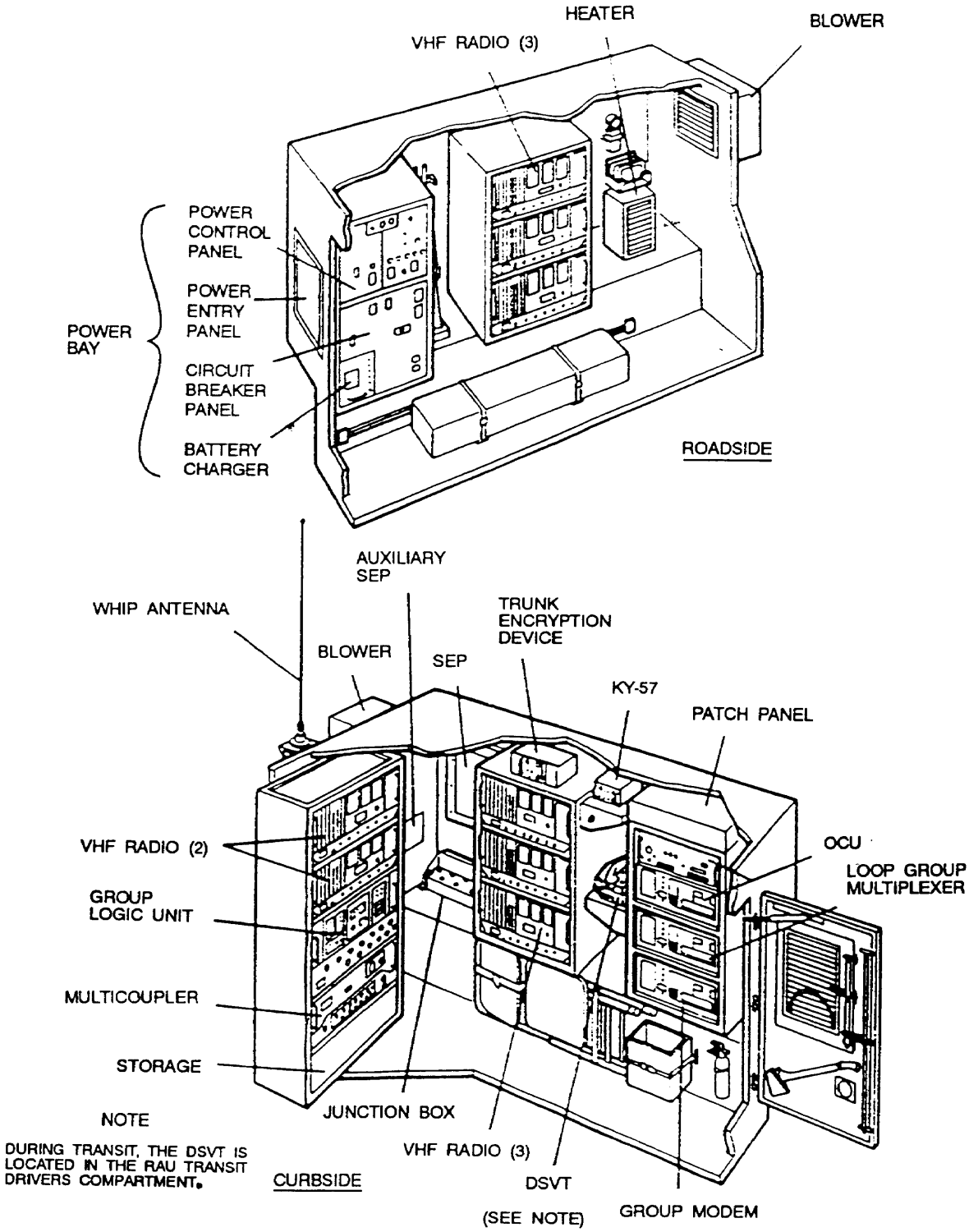

NOTE

DURING TRANSIT, THE DSVT IS LOCATED IN THE RAU TRANSIT DRIVERS COMPARTMENT.

AN/TSQ-154 and AN/TSQ-154A(V)l
Node Management Facility

NSN: 5895-01-247-0963

Reference: TM 11-5895-1375-13

General Information

The AN/TSQ-154 node management facility (NMF) provides the equipment and space required by the node commander to manage the communications resources of the node, both NC and LEN. The management facility assemblage is housed in an S-250E Shelter and transport on an M-1037 HMMWV. For nodal intercommunication, the intercoms and secure device for voice and FM communications (VINSON) handsets are provided. Network access is provided by the DNVT TA-1035(U). Provisions are available for the node commander to remote the DSVT KY-68 of his AN/VRC-97 into the management shelter.

Major Components

1 Shelter S-250E
1 Handset H-350( )/V
1 Display Electroluminescent AN/TSQ-154A(V)l
1 Keyboard AN/TSQ-154A(V)l
1 Environmental Control Unit
1 Intercommunications Station LS-147
1 Desk
2 Map Boards
1 DNVT TA-1035/U
1 Generator PU-753/M, 10 kW
1 AC Power Cable, 15 feet
1 Signal Cable, 10-pair
1 AC Cable, 35 feet
1 Teletypewriter AN/UGC-74B(V)3 (AN/TSQ-154)

Technical Characteristics

Power Requirements ..... 115 V AC, 50 or 60 Hz, single phase

NOTE: The management facility is used at the LEN and the NC.

AN/TSQ-154 and AN/TSQ-154A(V)1 Node Management Facility

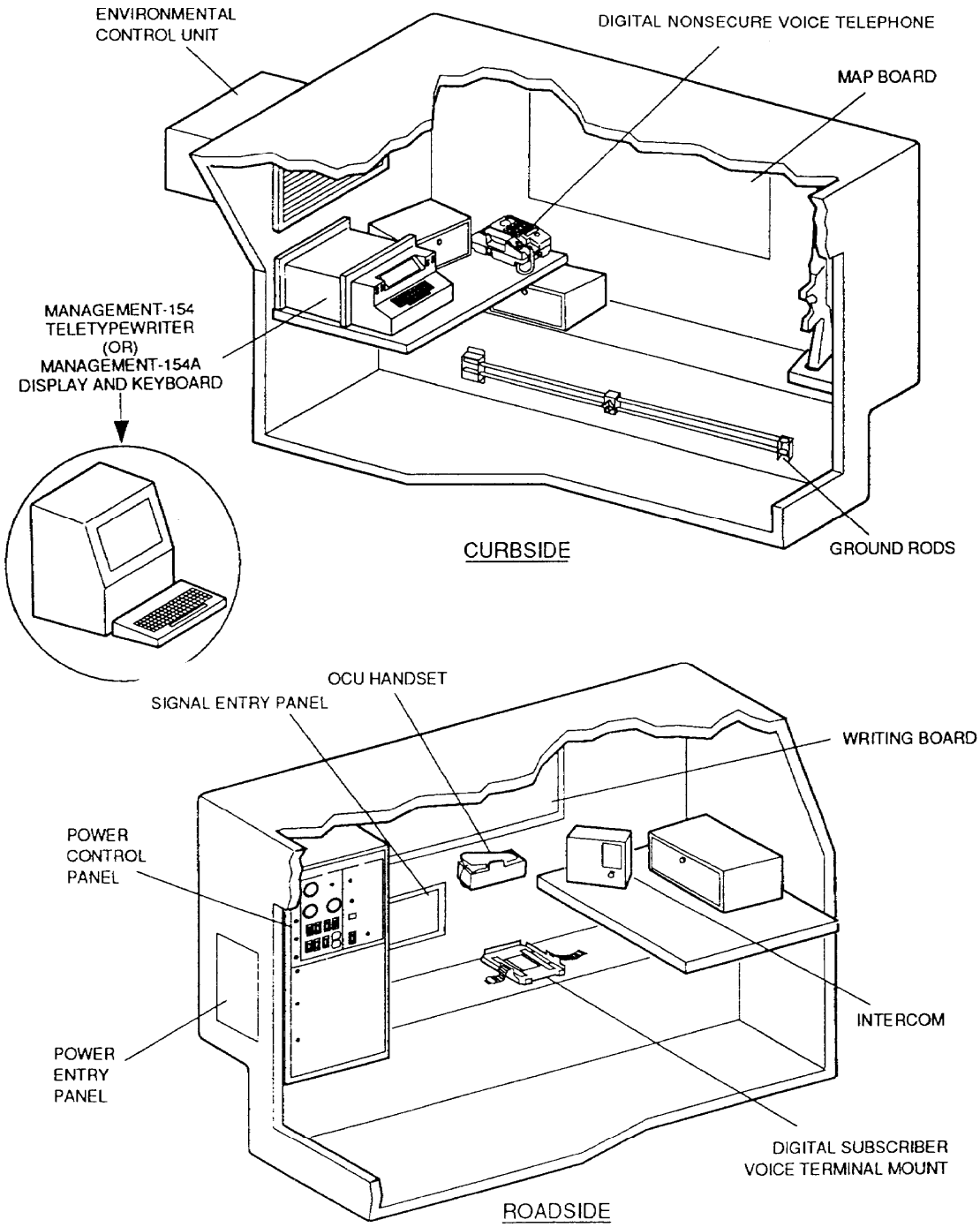

AN/TTC-47
Node Center Switch

NSN: 5805-01-246-7159 (AN/TTC-47)
5805-01-310-2540 (AN/TTC-47A(V)l)
5805-01-324-6854 (AN/TTC-47B(V)l)
5805-01-329-4805 (AN/TTC-47C(V)1)

Reference: TM 11-5805-766-12

General Information

The AN/TTC-47 is configured in two S-250( )/G shelters, a Switching Group ON-306/TTC-47 and an Operations Group OL-413/TTC-47, each transported on an M-1037 HMMWV. The NC switch is the hub of the MSE node providing network interface for the subscriber access elements. The switching group provides the external interface, circuit switching, and associated functions. The operations group provides the central processing and operator interface functions. The NC switch provides automatic subscriber finding features which allow permanent subscriber address assignment and negates the need for knowledge of subscriber geographical location and switch affiliation at the subscriber level. Power to both assemblages is provided by a PU-753/M, 10 kW, trailer-mounted, diesel generator set.

NOTE: The following six configurations show the shelter layouts for all four versions.

AN/TTC-47
Node Center Operations Shelter

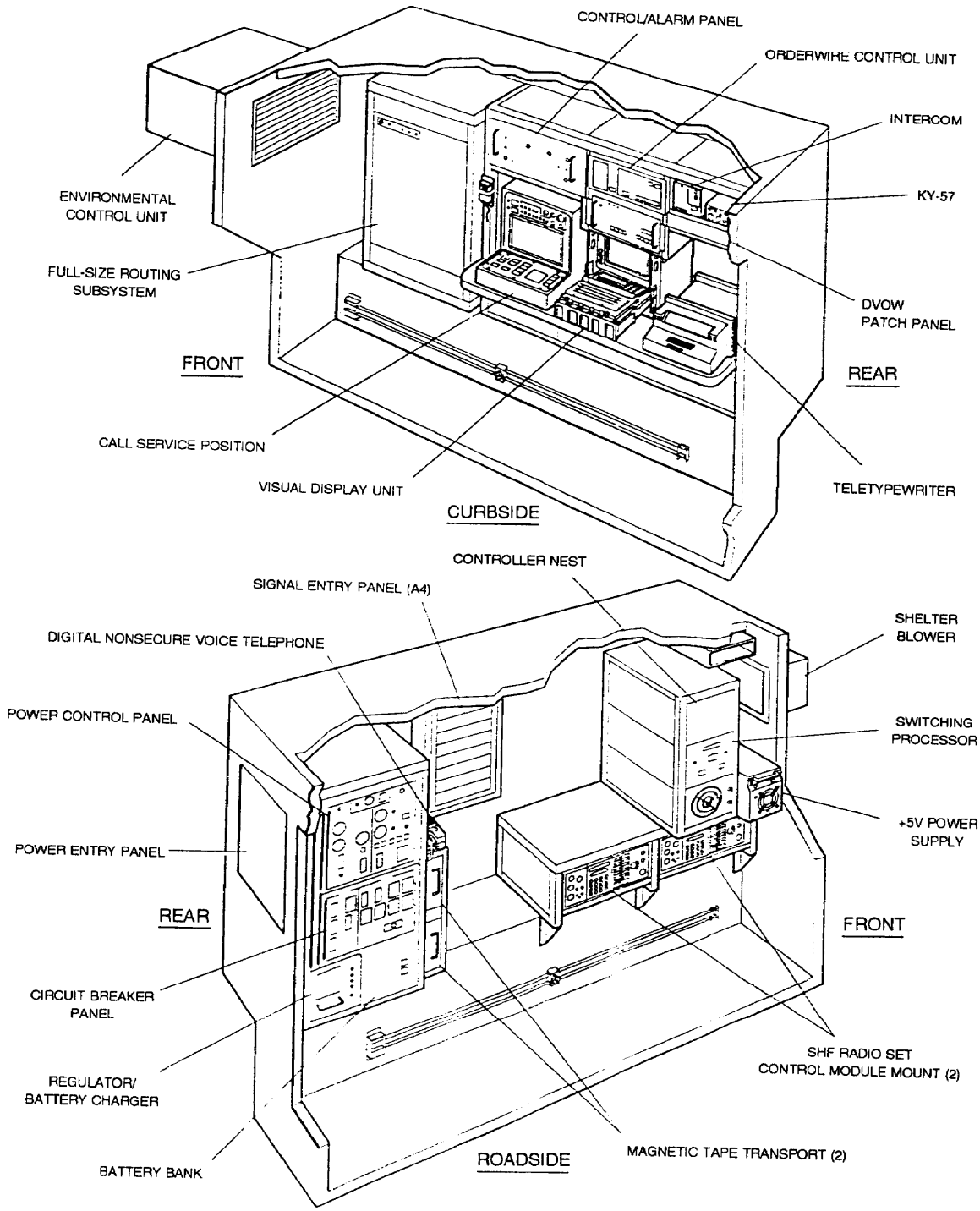

AN/TTC-47A(V)1
Node Center Operations Shelter

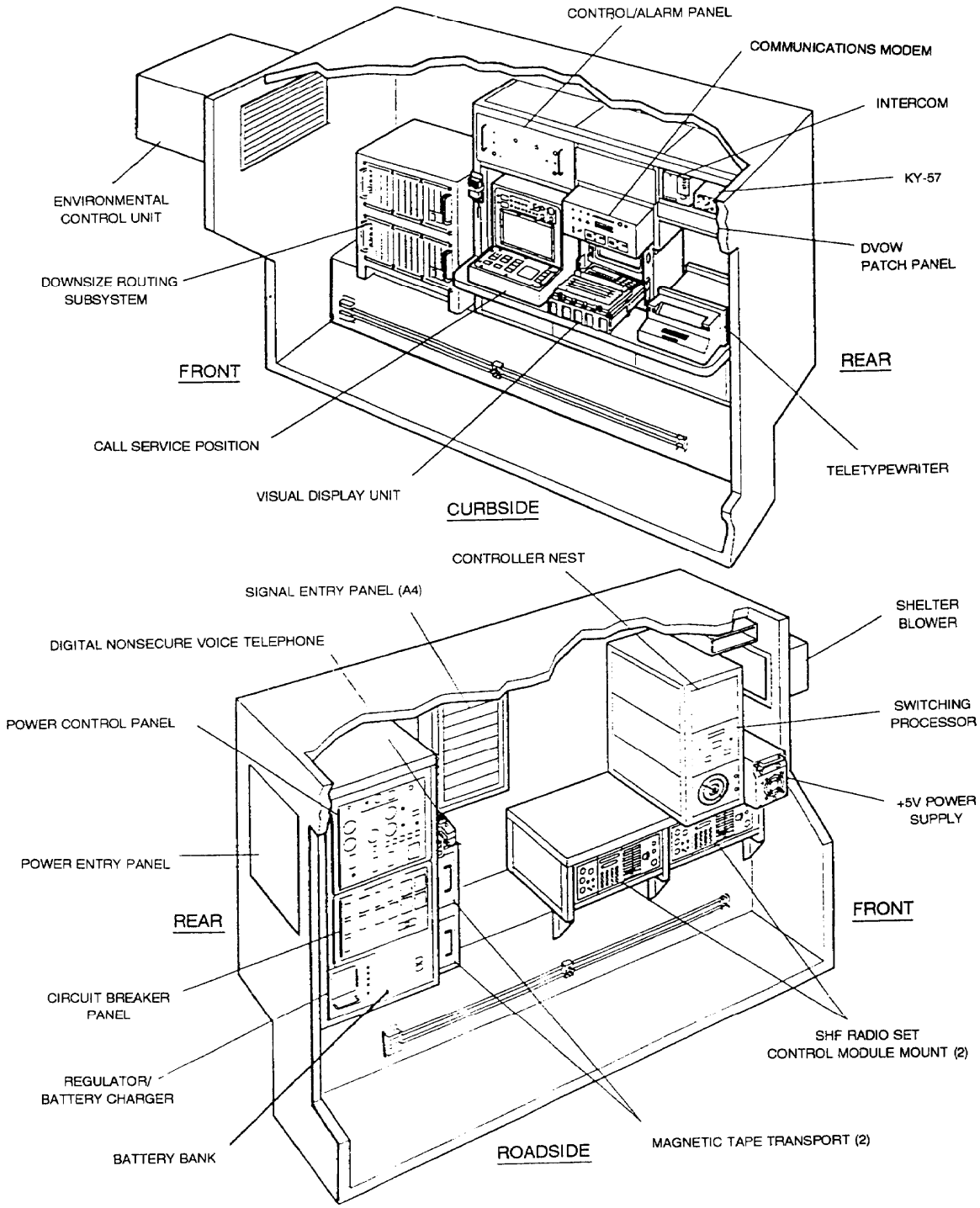

AN/TTC-47B(V)1
Node Center Operations Shelter

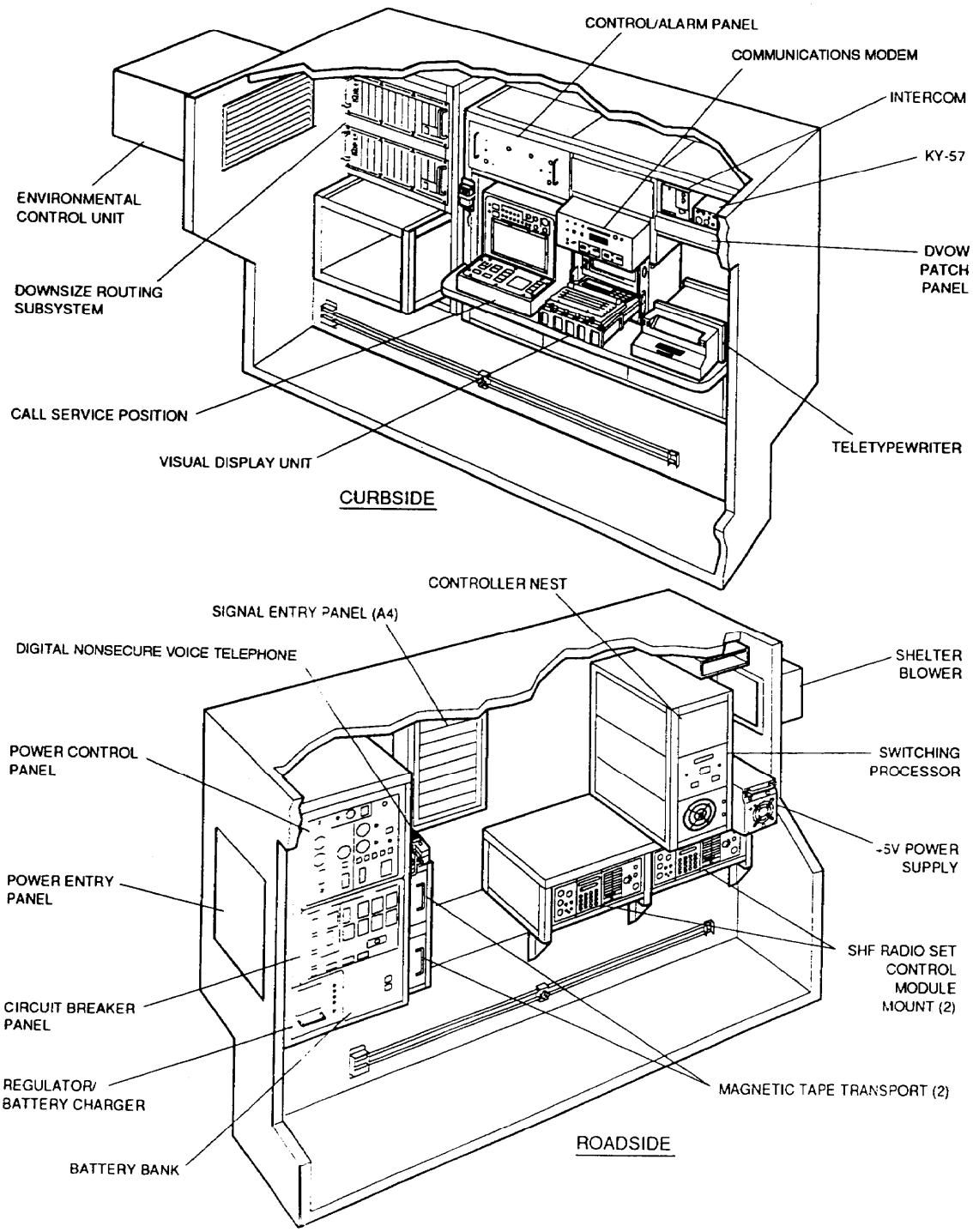

AN/TTC-47C(V)1
Node Center Operations Shelter

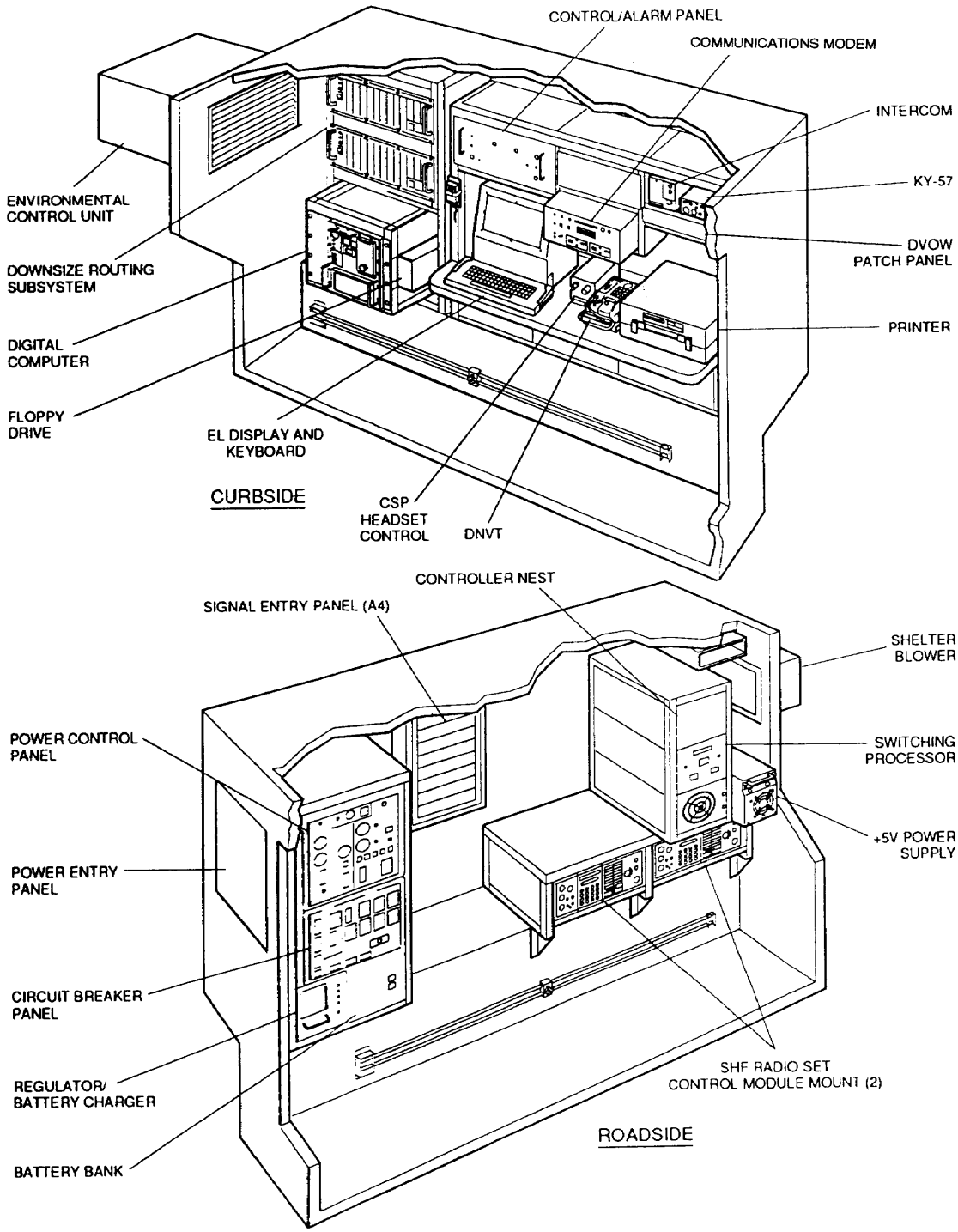

AN/TTC-47 and AN/TTC-47A(V)1 Node Center Switching Shelter

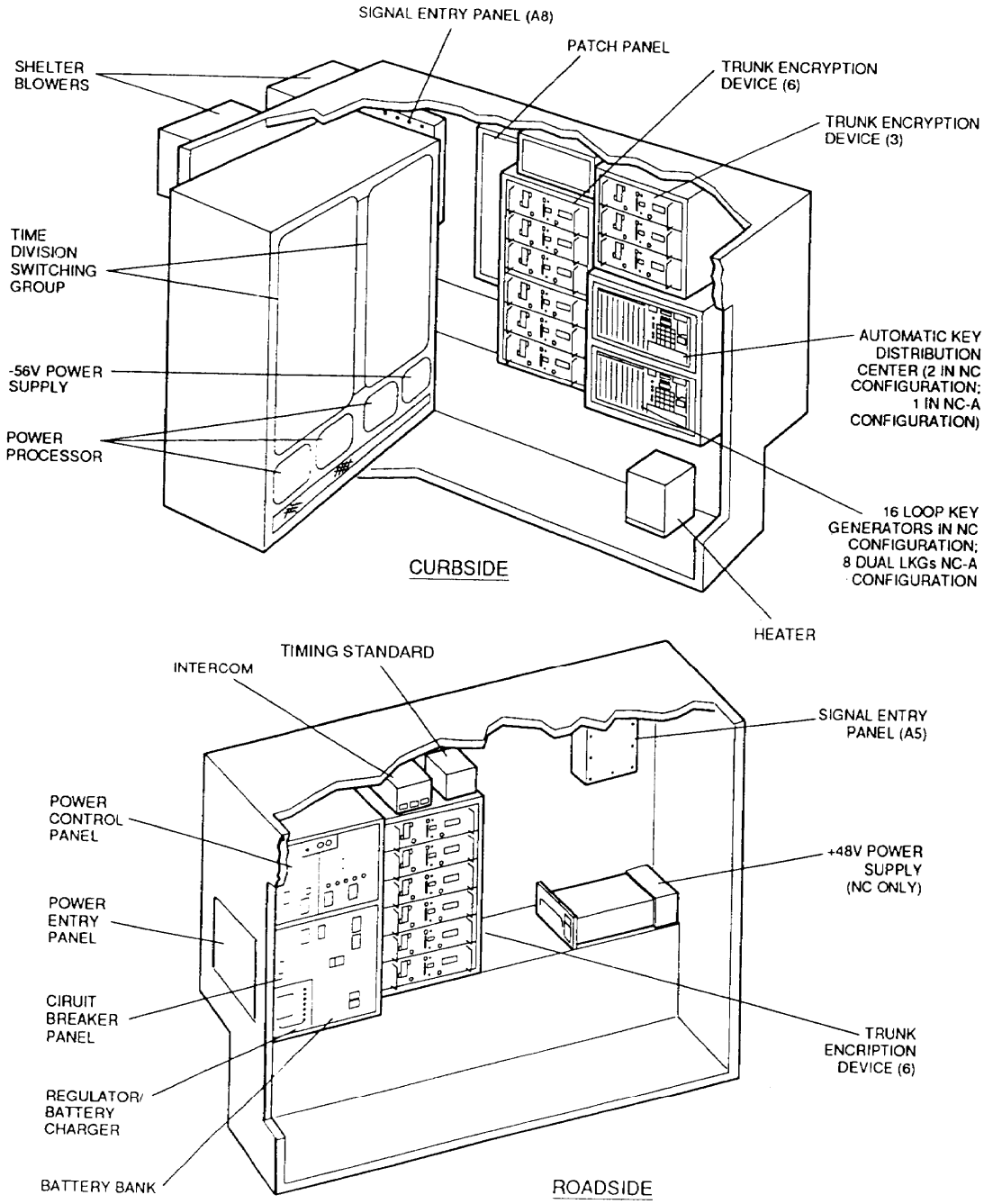

AN/TTC-47B(V)1 and AN/TTC-47C(V)1 Node Center Switching Shelter

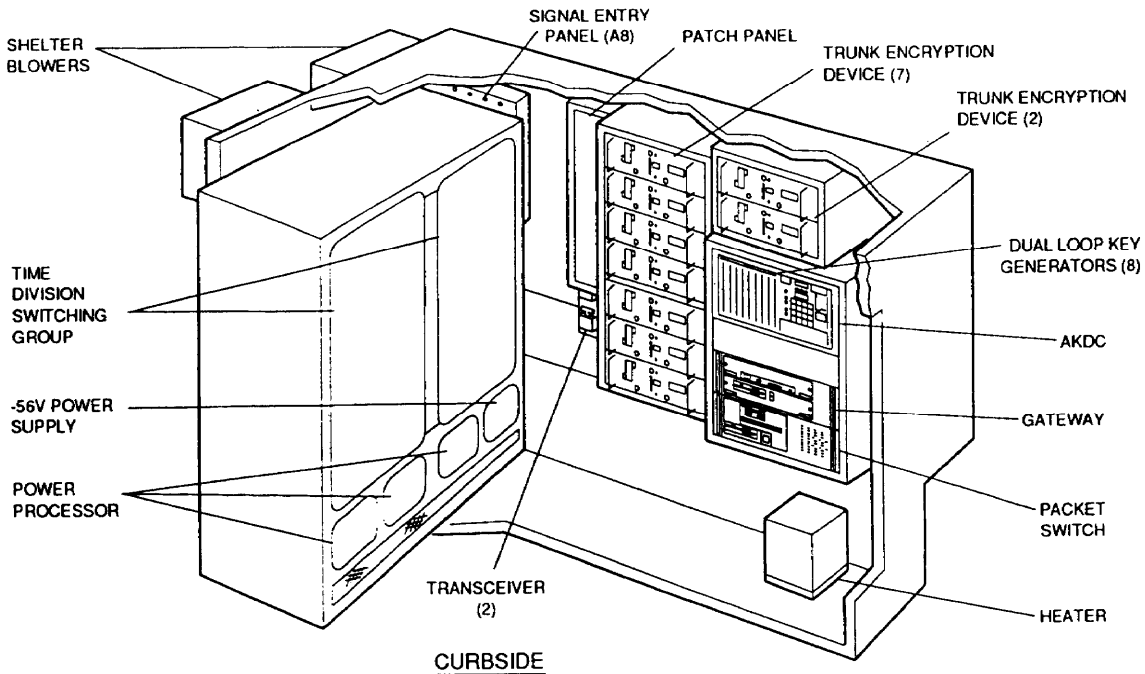

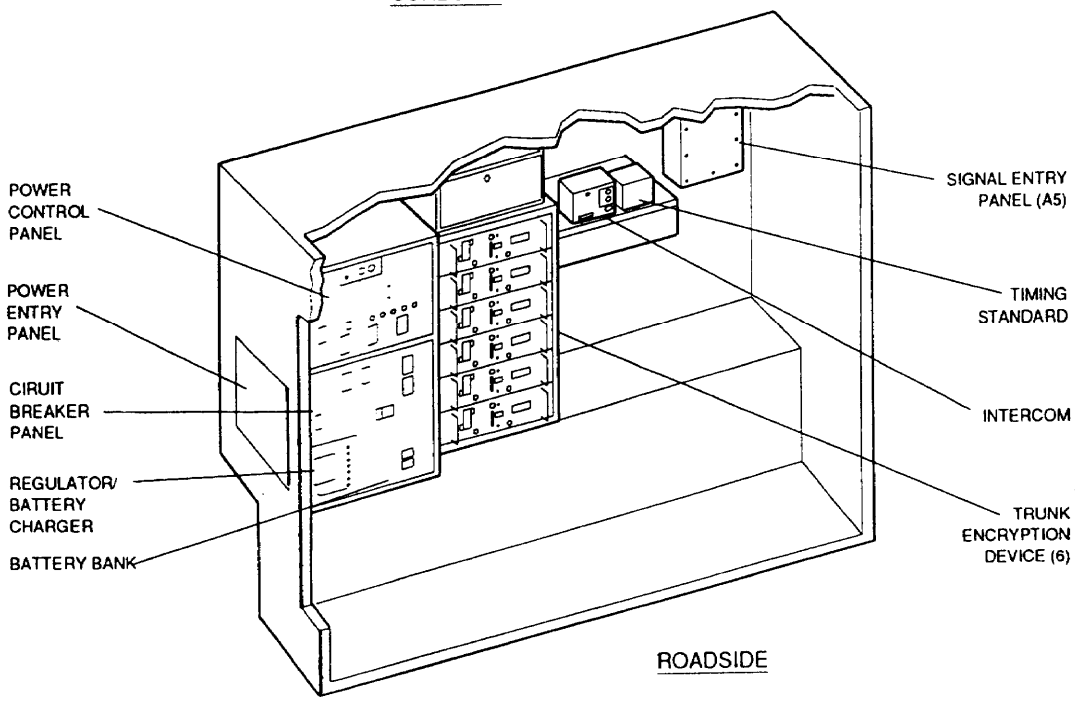

Section III. Large Extension Node

AN/TTC-46, AN/TTC-46A(V)l, AN/TTC-46B(V)l and AN/TTC-46C (V)1 Large Extension Node Switches

NSN: 5805-01-253-6850 (AN/TTC-46)
5805-01-310-2541 (AN/TTC-46A(V)l)
5805-01-323-6458 (AN/TTC-46B(V)l)
5805-01-329-4803 (AN/TTC-46C(V)l)

Reference: TM 11-5805-765-12

General Information

The AN/TTC-46 LEN is configured in two S-250s, the Switching Group ON-305/TTC-46 and the Operations Group OL-412/TTC-46. Each shelter is transported on an M-1037 HMMWV. The LEN is configured basically the same as the NC switch with basic differences in termination configuration for trunks and the LEN is not a tandem switch. The switching shelter provides the external interface, circuit switching and associated functions. The operations shelter provides the central processing and operator interface functions. The LEN performs all access switching and control functions for an MSE network. Power to both assemblages is provided by a PU-753/M, 10 kW, trailer-mounted, diesel generator set towed by the operation shelter's prime mover.

NOTE: The following six configurations show the shelter layouts for all four versions.

AN/TTC-46
Large Extension Node Switch Operations Shelter

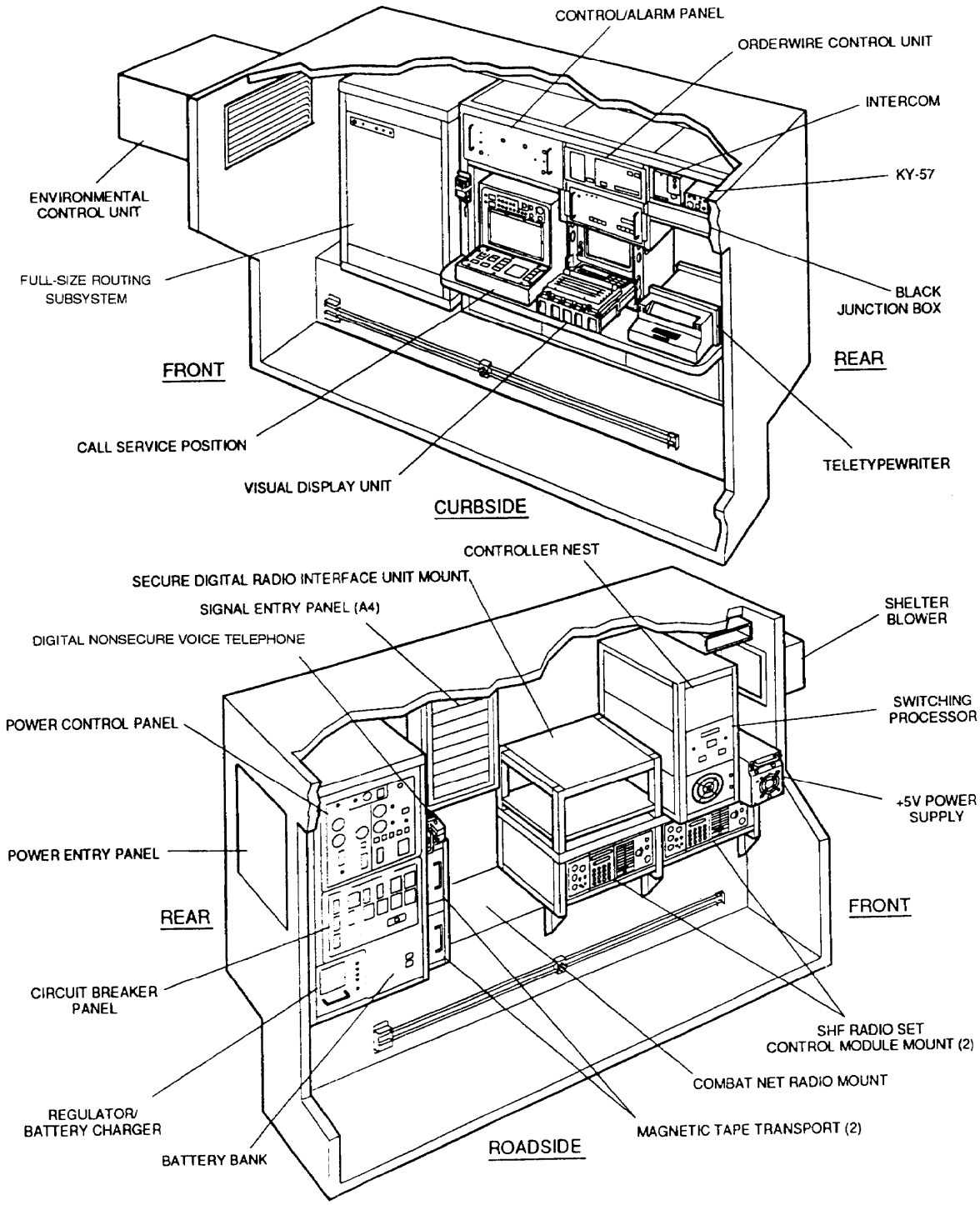

AN/TTC-46A(V)1
Large Extension Node Switch Operations Shelter

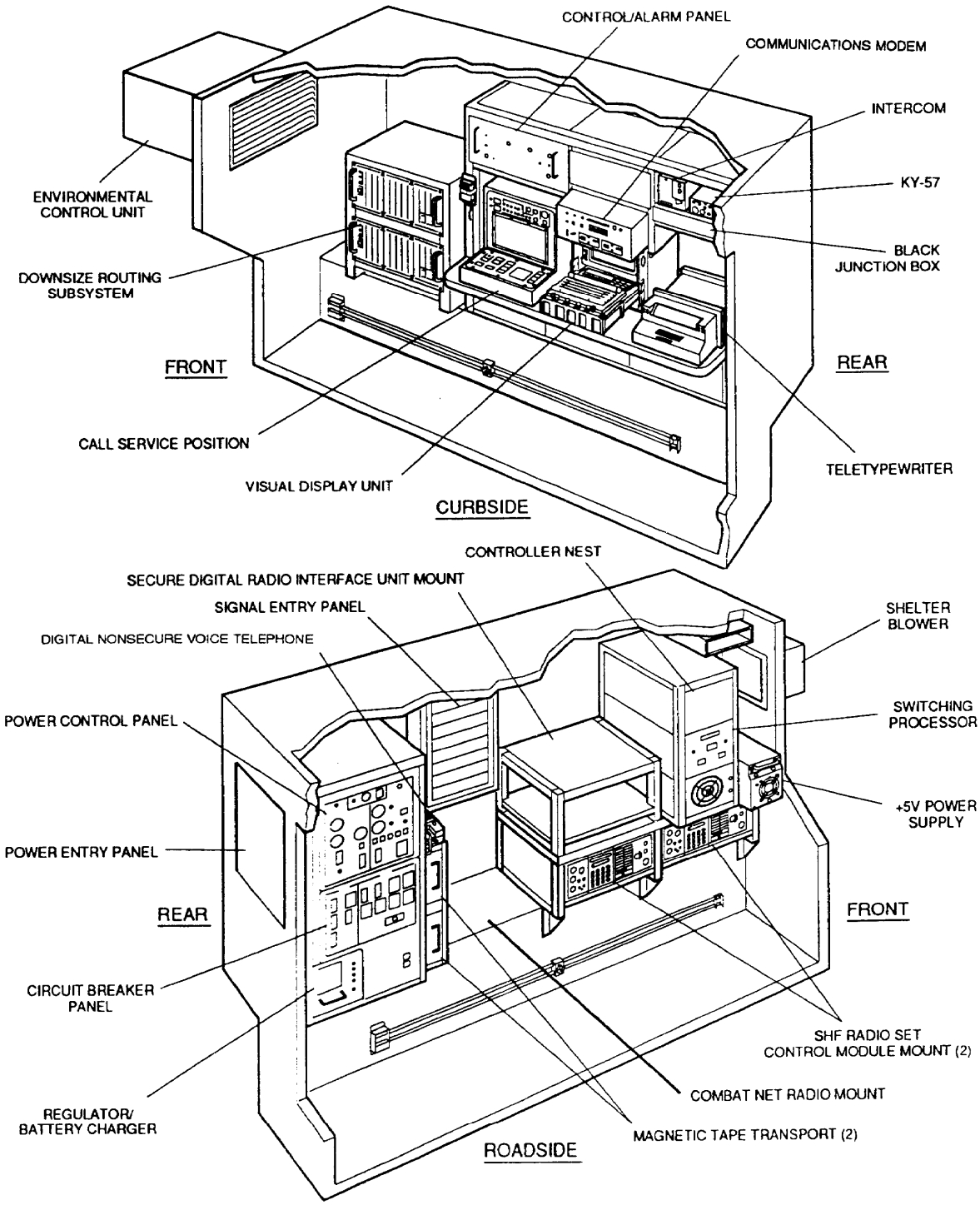

AN/TTC-46B(V)1
Large Extension Node Switch Operations Shelter

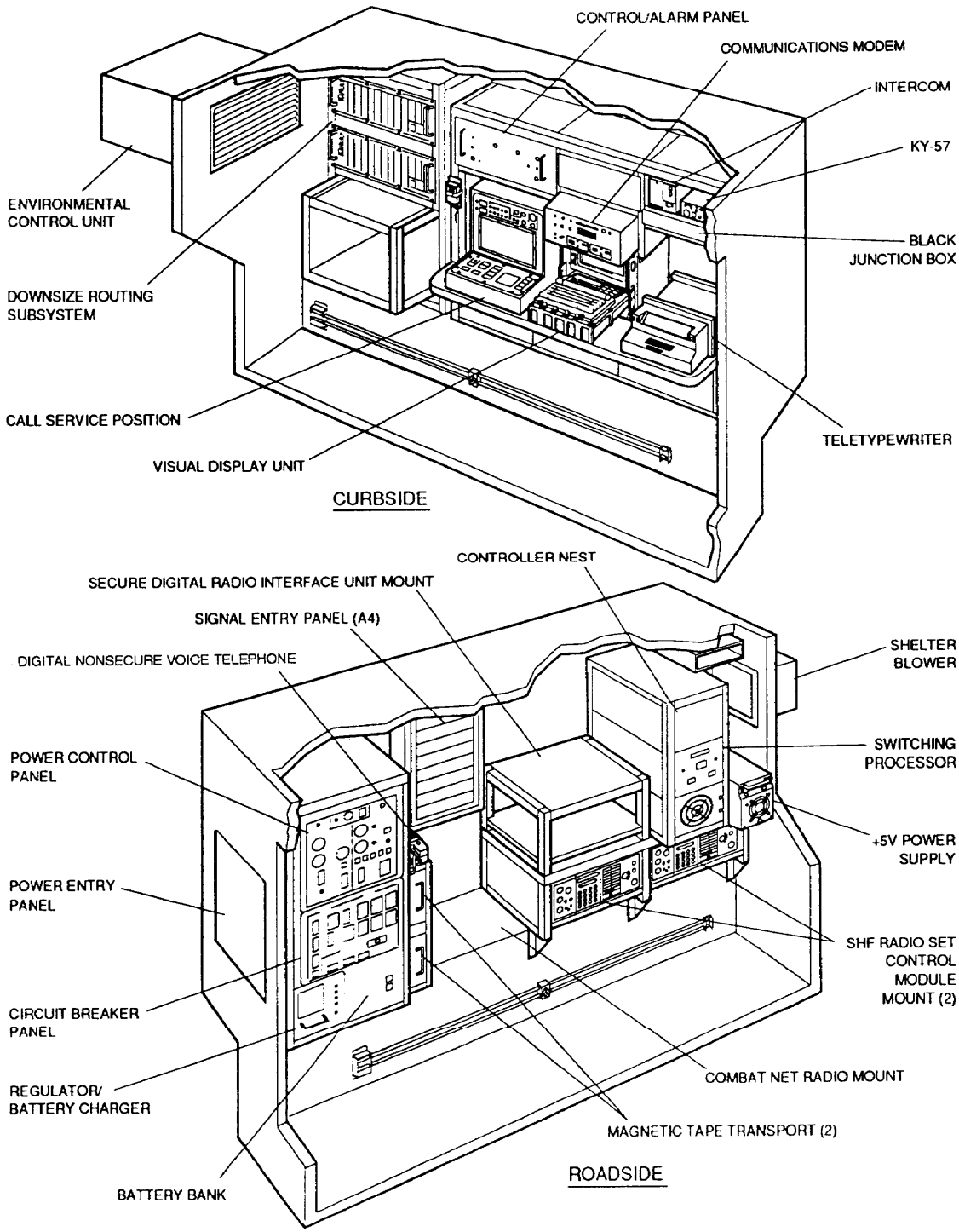

AN/TTC-46C(V)1
Large Extension Node Switch Operations Shelter

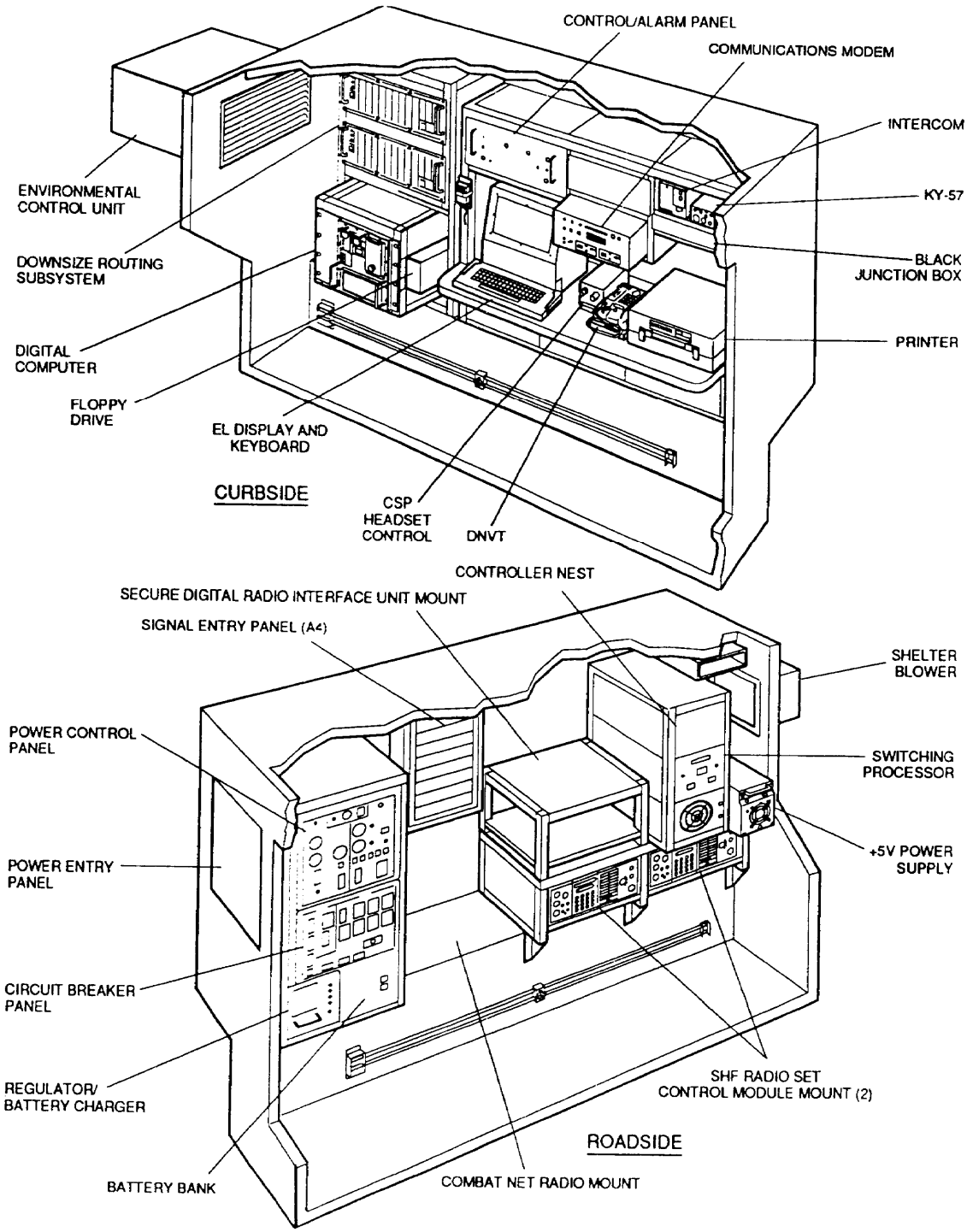

AN/TTC-46 and AN/TTC-46A(V)1 Large Extension Node Switch Operations Shelter

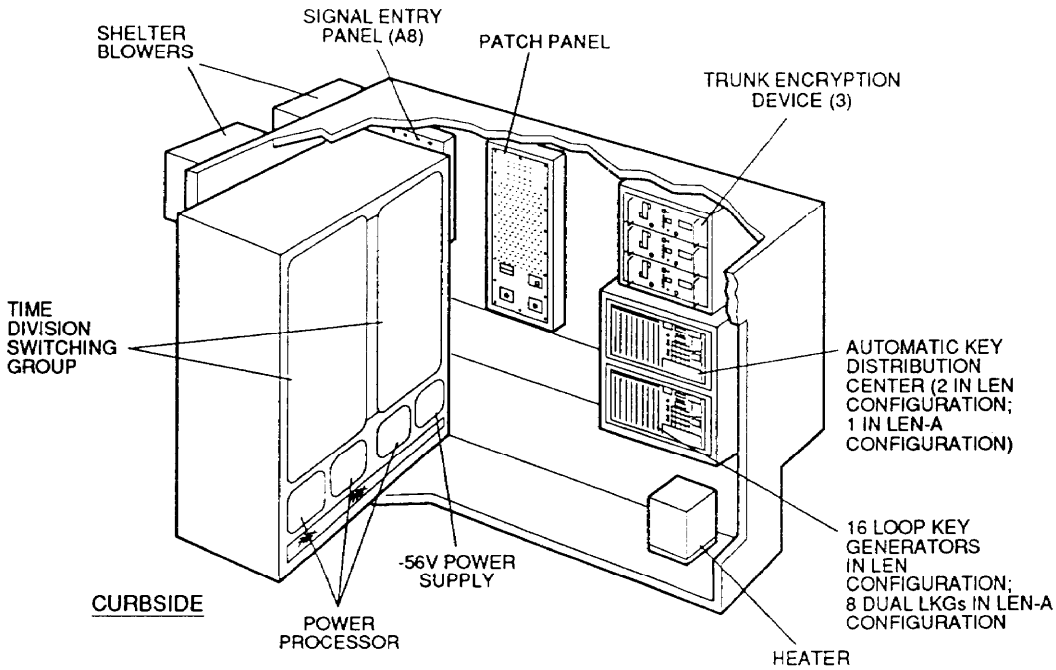

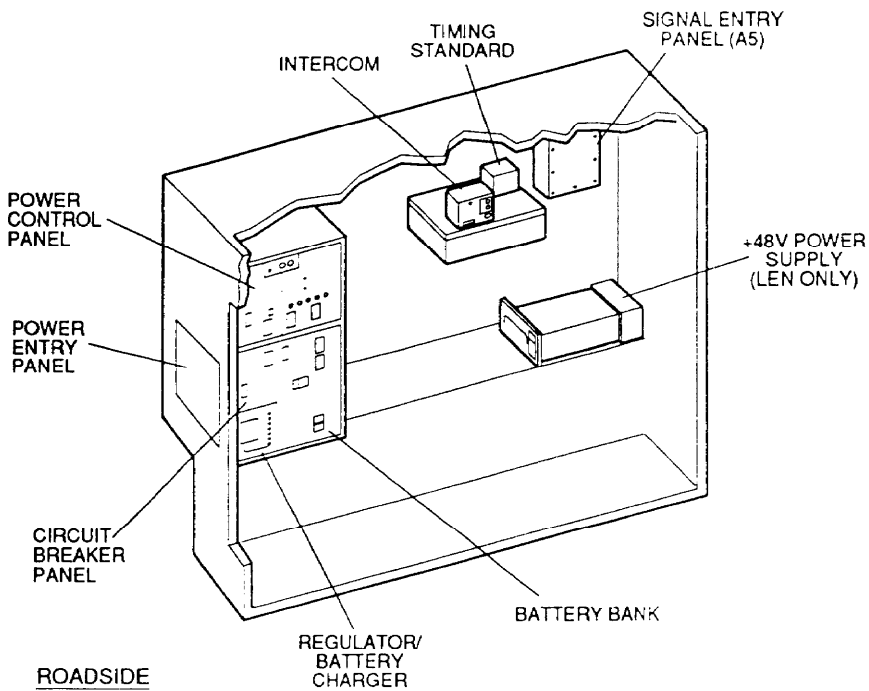

AN/TTC-46B(V)1 and AN/TTC-46C(V)1 Large Extension Node Switch Operations Shelter

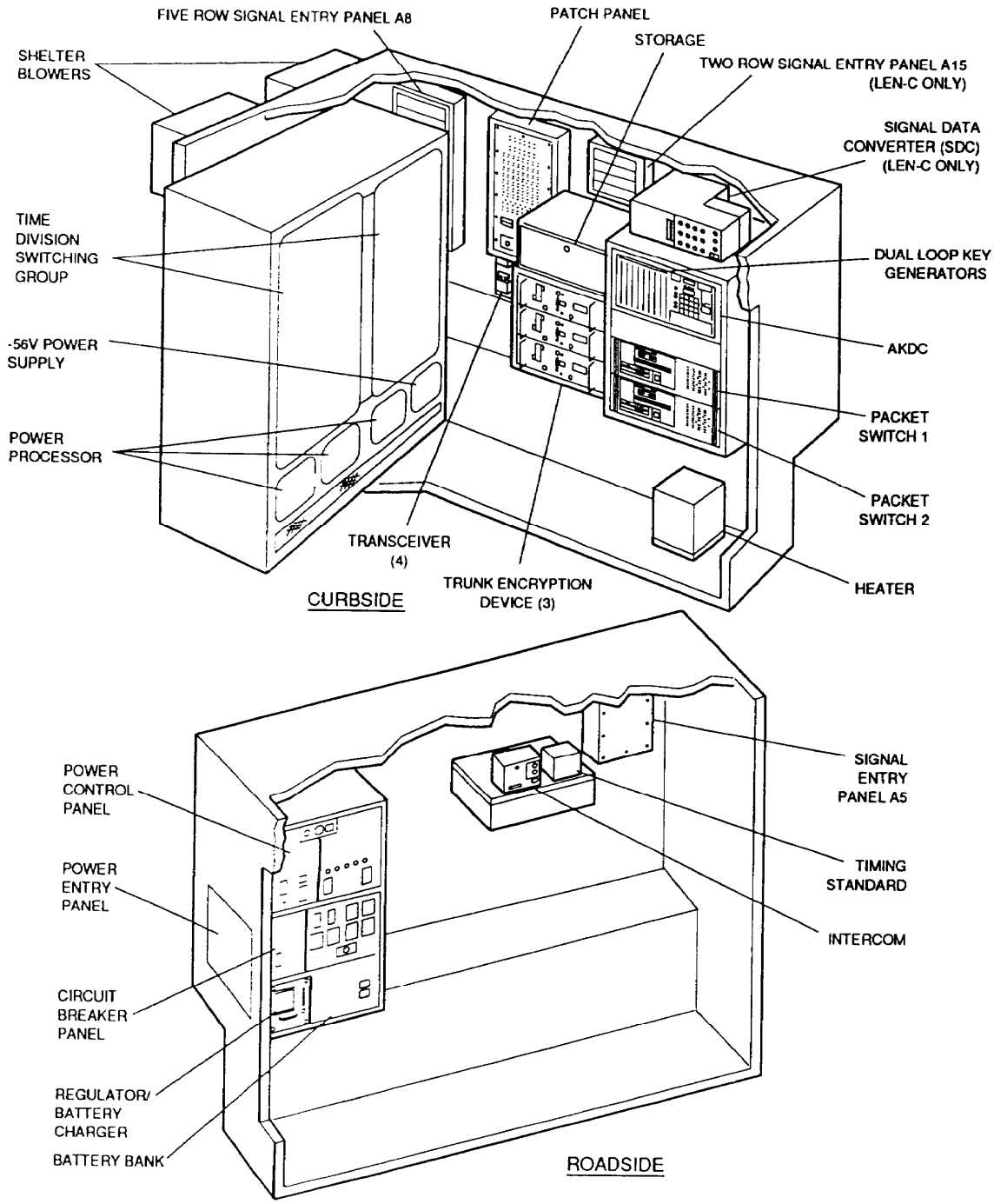

Section IV. Small Extension Node

AN/TTC-48(V)
Small Extension Node Switch

NSN:	5805-01-245-9058	(AN/TTC-48(V)1)
	5805-01-244-4257	(AN/TTC-48(V)2)
	5805-01-309-4650	(AN/TTC-48A(V)l)
	5805-01-310-2539	(AN/TTC-48A(V)2)
	5805-01-324-0861	(AN/TTC-48B(V)1)
	5805-01-324-0862	(AN/TTC-48B(V)2)
	5805-01-329-4802	(AN/TTC-48C(V)l)
	5805-01-329-4808	(AN/TTC-48C(V)2)
	5805-01-329-4809	(AN/TTC-48C(V)3)
	5805-01-329-4810	(AN/TTC-48C(V)4)

Reference: TM 11-5805-764-13

General Information

The SEN switch consists of an S-250()/E shelter transported on an M-1037 HMMWV. The SEN switch contains switching, multiplexing, and COMSEC equipment which supports the secure digital communications of a CP. The SEN switch is provided in ten versions. The (V)1 provides 26-digital lines and 10-digital trunks and the (V)2 provides 41-digital lines and 13-digital trunks. Both versions provide 2 DC closure commercial office interfaces and a Secure Digital Net Radio Interface KY-90. The SEN switch can interface with a LEN switch or an NC switch directly via CX-11230/G cable, via LOS or via TACSAT Terminal AN/TSC-85A or AN/TSC-93A. Power is provided by a PU-753/M, 10 kW, trailer-mounted, diesel generator set.

NOTE The following five configurations show the shelter layouts for all ten versions.

AN/TTC-48(V)1 and AN/TTC-48(V)2 Small Extension Node Switch

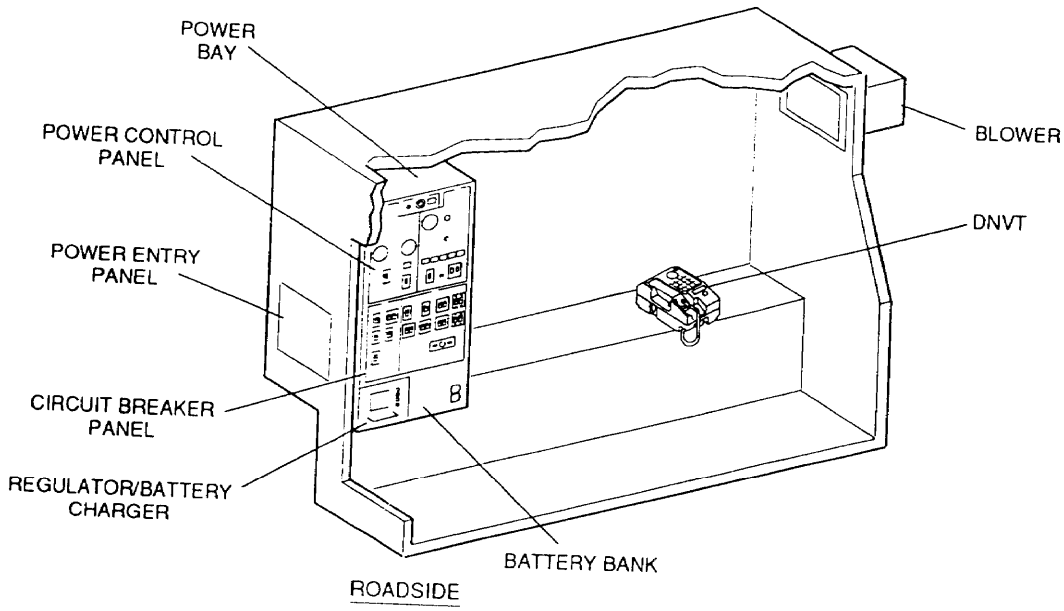

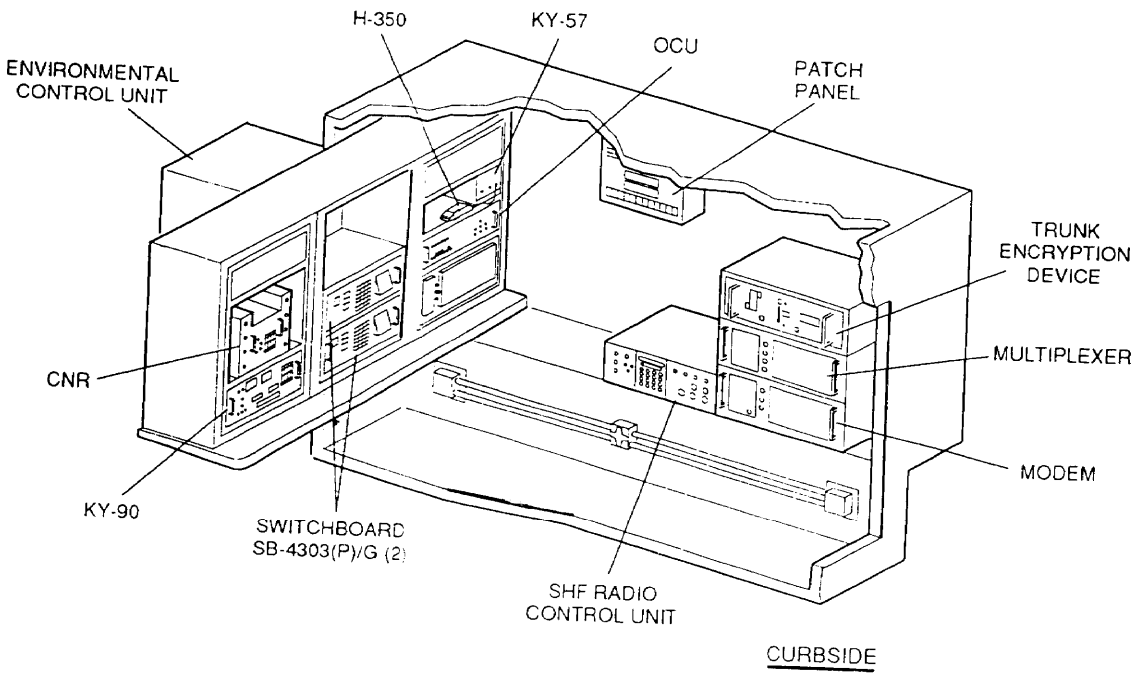

AN/TTC-48A(V)1 and AN/TTC-48A(V)2 Small Extension Node Switch

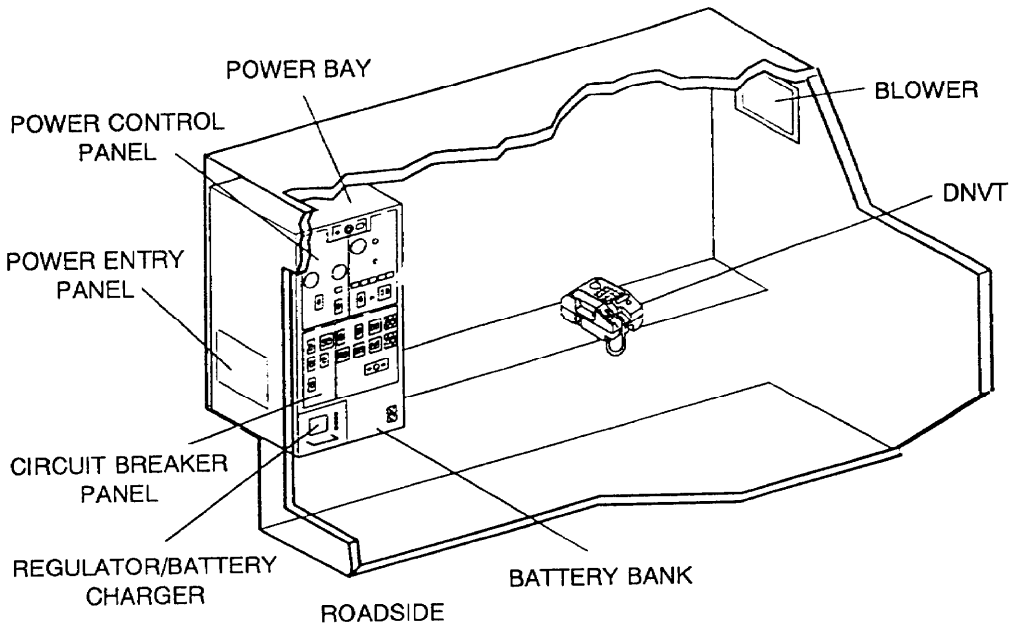

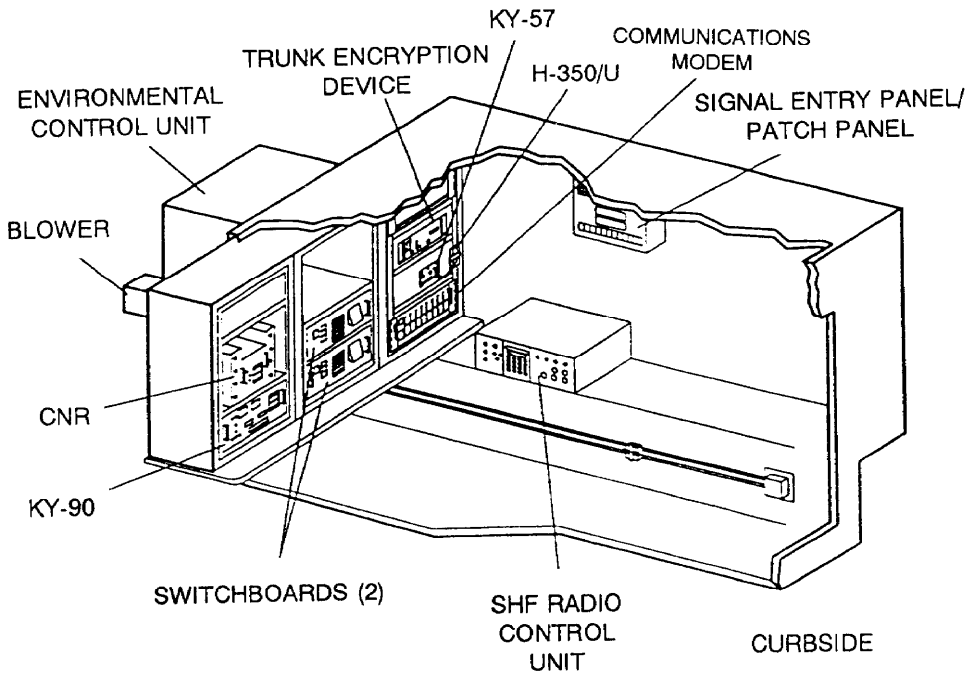

AN/TTC-48B(V)1 and AN/TTC-48B(V)2 Small Extension Node Switch

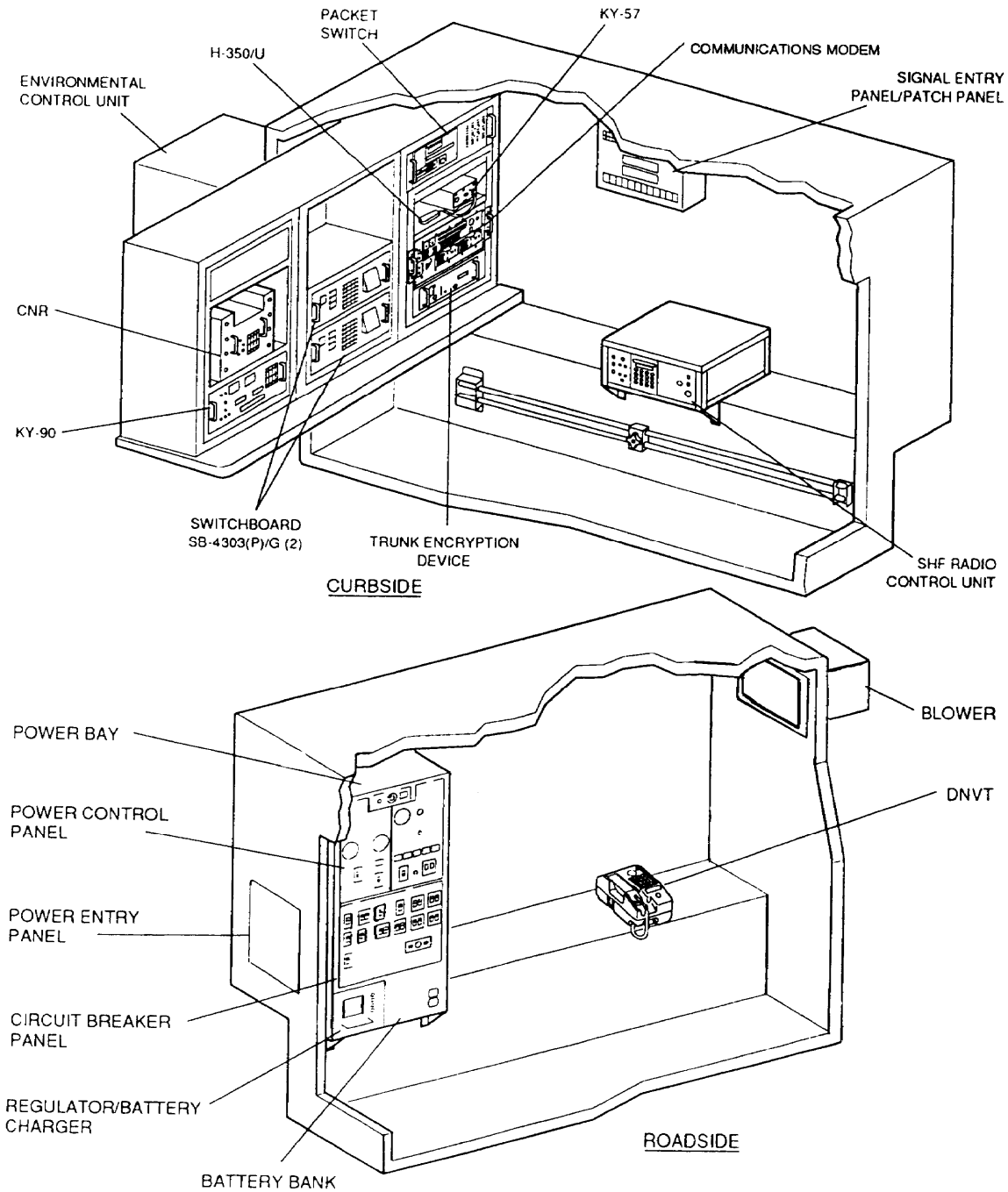

AN/TTC-48C(V)1 and AN/TTC-48C(V)2 Small Extension Node Switch

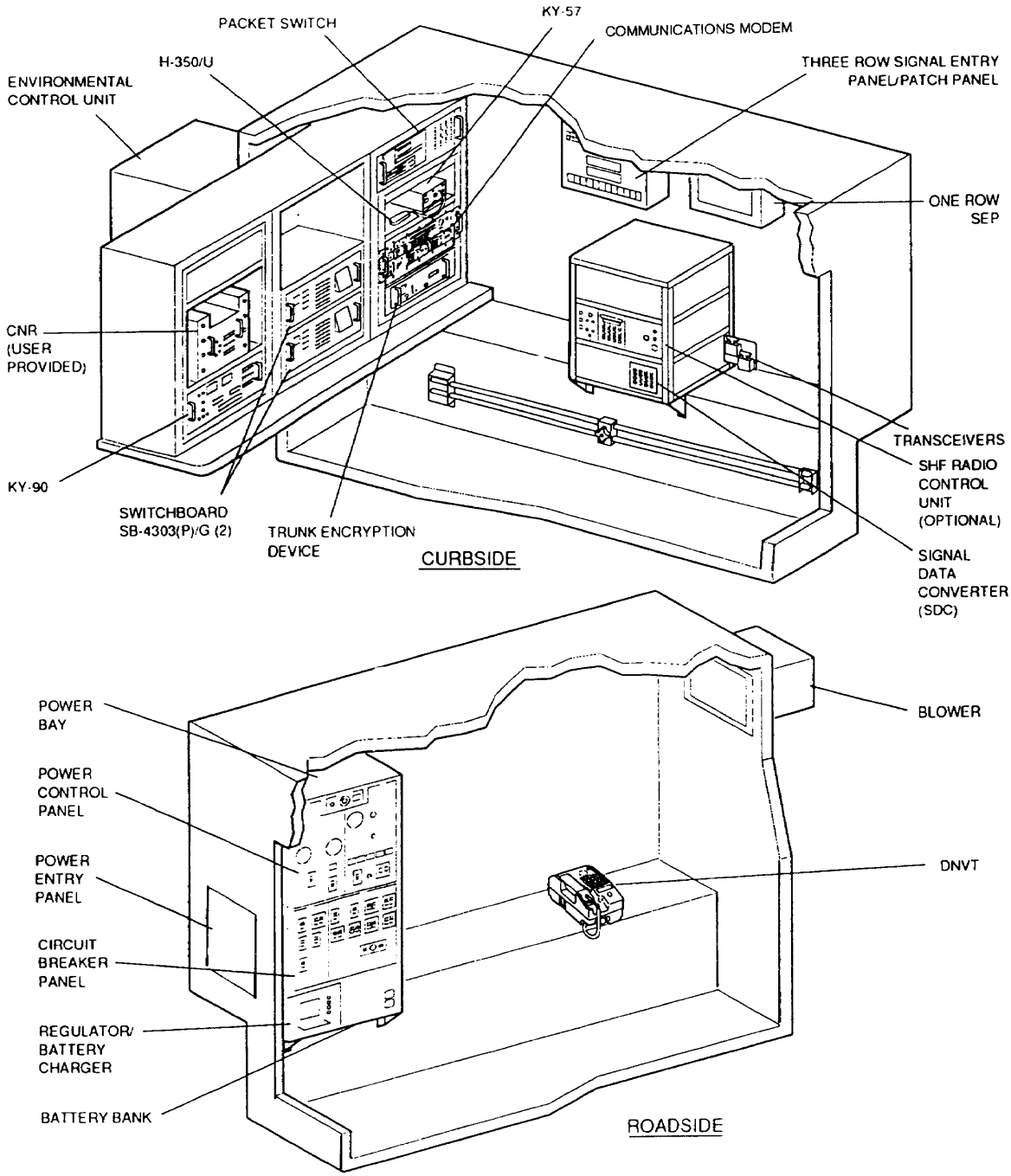

AN/TTC-48C(V)3 and AN/TTC-48C(V)4 Small Extension Node Switch

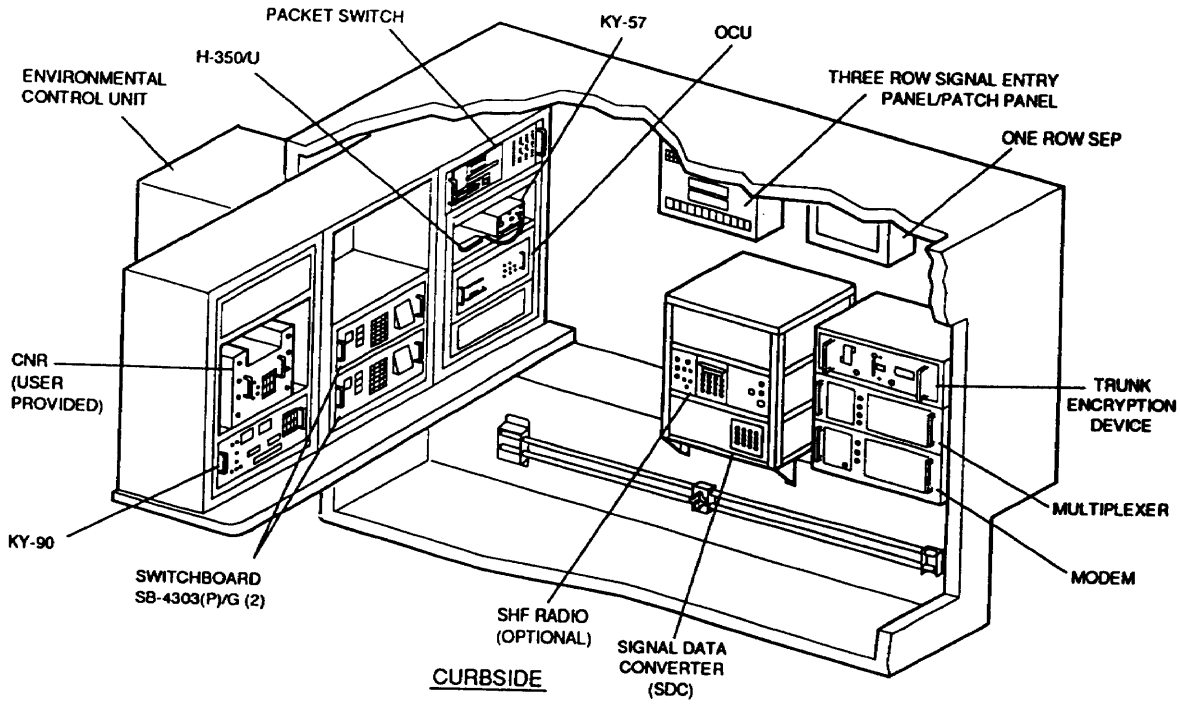

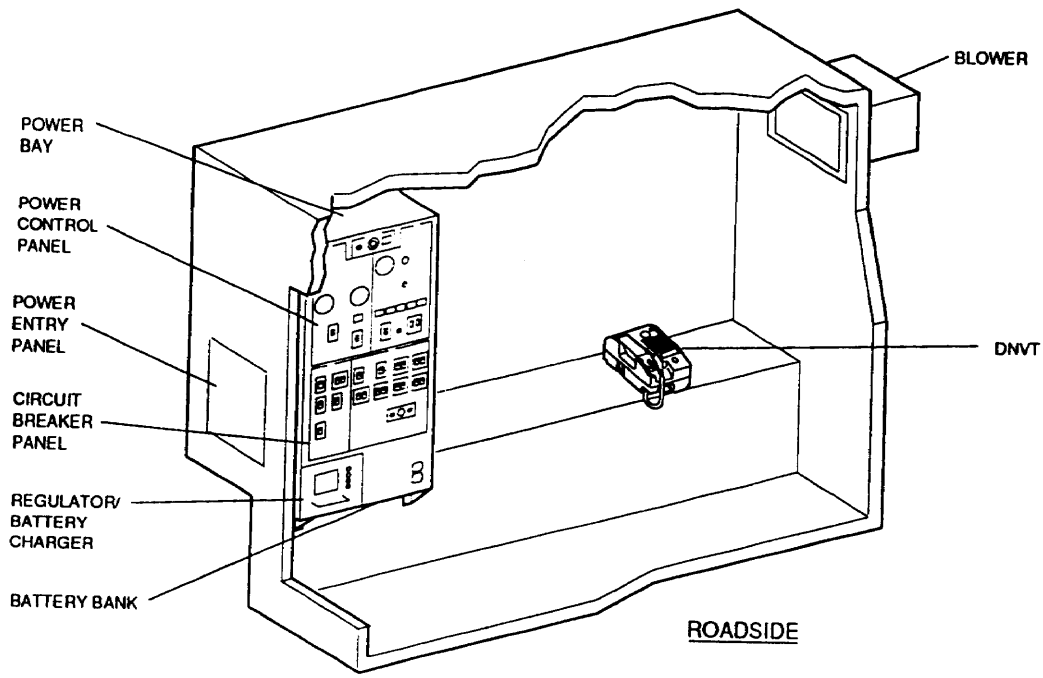

Section V. Subscriber Terminal Equipment

AN/VRC-97
Mobile Subscriber Radiotelephone Terminal

NSN: 5820-01-246-6818

Reference: TM 11-5820-1021-10

General Information

The AN/VRC-97 MSRT consists of a VHF radio and DSVT. Depending on the mission, the AN/VRC-97 can be installed in one of nine US Army vehicles or used in stand-alone tripod configuration. Both the radio and the DSVT are designed to operate on the ground without protection from the environment. The radio transmits in the low band and receives in the high band and interfaces at 16 kb/s to the DSVT which provides secure discrete addressability. The radio front panel is accessible to the user for inserting COMSEC crypto variable and frequency fill. Inserting the personal code and the directory number is completed by using the keypad on the DSVT. Since the radio operates automatically, all subsequent calls, both initiating and answering, need only use the DSVT.

Major Components

1 VHF Radio RT-1539(P)
1 VHF Antenna (30 to 88 MHz)
1 DSVT KY-68
1 Electronic Transfer Device KYK-13
1 High Voltage Amplifier (HVA)-9
1 Universal Power Supply (UPS)

Technical Characteristics

Power Requirement . . . . . -110 V AC, 220 V AC, or 28 V DC
Power Consumption . . . . . -50 W (standby) 240 W (max call in process)
Frequency Range* . . . . . 30 to 35 MHz (low band, CONUS)
40 to 50 MHz (high band, CONUS)
30 to 51 MHz (low band, OCONUS)
59 to 88 MHz (high band, OCONUS)
Transmission Range (Planning) . . . . . 15 km

*** MSRT transmits in low band and receives in high band.**

AN/VRC-97
Mobile Subscriber Radiotelephone Terminal

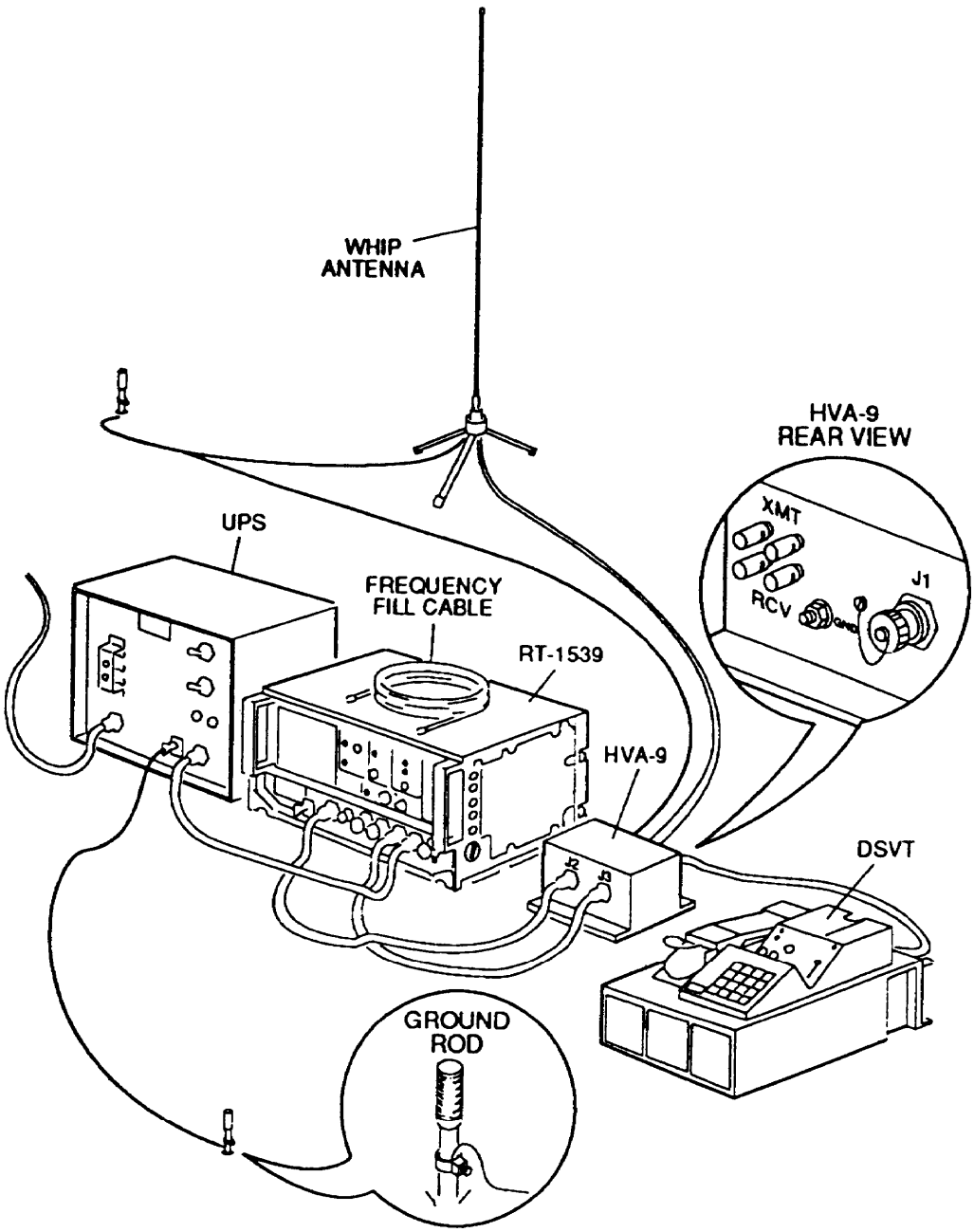

AN/VRC-97
Mobile Subscriber Radiotelephone Terminal

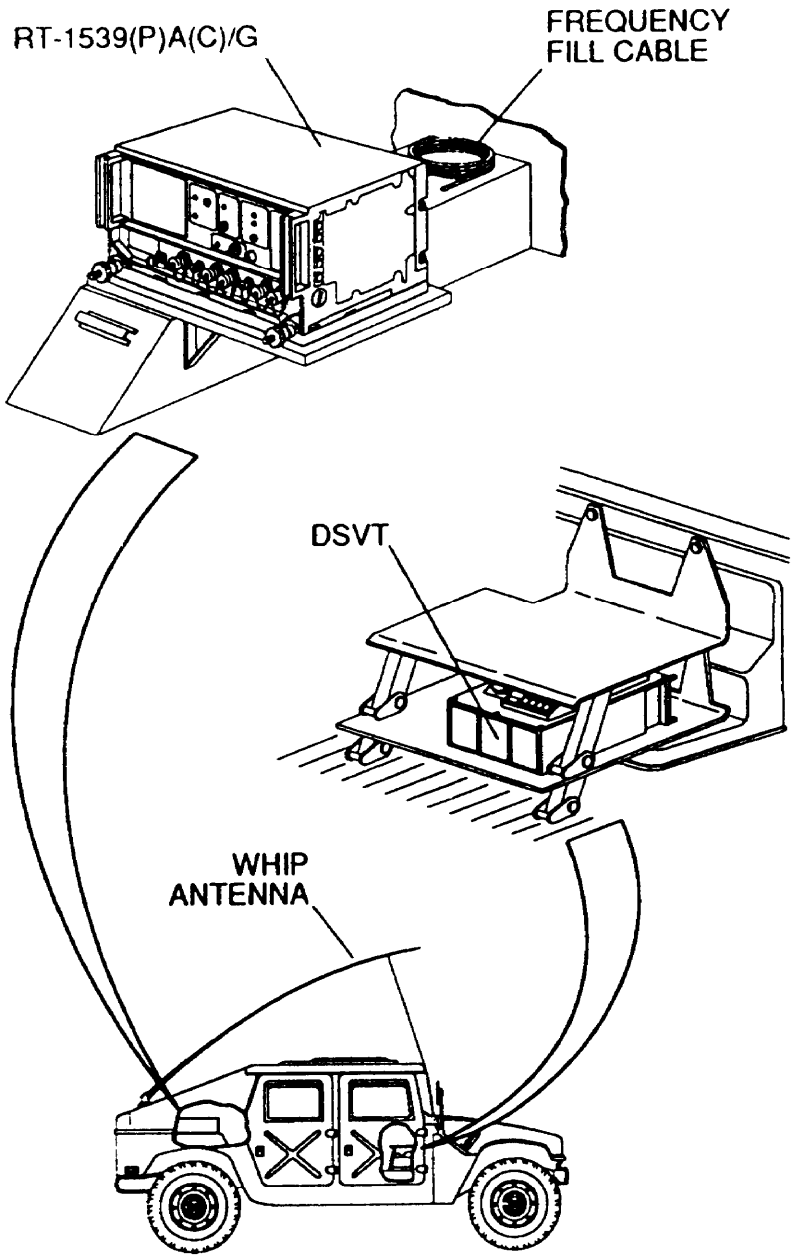

Section VI. Line-of-Sight Multichannel Radio Terminals

AN/TRC-190(V)
Line-of-Sight Multichannel Radio Terminal

NSN: 5820-01-247-0981 (AN/TRC-190(V)l)
5820-01-247-0979 (AN/TRC-190(V)2)
5820-01-247-0982 (AN/TRC-190(V)3)
5820-01-247-0980 (AN/TRC-190(V)4)

Reference: TM 11-5820 -1023-13-1

General Information

There are four versions of the AN/TRC-190(V) LOS multichannel radio assemblage. The differences between the versions are the MSE assemblage they support and the number of LOS radios and antenna masts they contain, as shown below. All versions of the LOS radio assemblage consist of an S-250()/G shelter transported on an M-1037 HMMWV.

Versions

(V)l Supports RAU/SEN switch—consists of 2 radios, 1 antenna mast.
(V)2 Supports NATO analog interface (NAI)—consists of 2 radios, 1 antenna mast.
(V)3 Supports NC switch—consists of 4 radios, 3 antenna masts.
(V)4 Supports LEN switch—consists of 2 radios, 2 antenna masts.

Technical Characteristics

Power Requirements . . . . . 115 V AC, 50 or 60 Hz, single phase or 28 V DC
Frequency Range . . . . . 225 to 400 MHz or 1350 to 1850 MHz LOS; 14.50 to 15.35 DTH
Transmission Range (Planning) . . . . . 30 km or 183 mi LOS; 2 to 5 km 1.2 to 3.1 mi DTH
Type of Modulation Group Data . . . . . FSK

Major Components

AN/TRC-190(V)l

1 Utility Truck M-1037
1 Generator PU-751M, 5 kW
1 AC Power Cable, 15 feet
1 AC Power Cable, 35 feet
1 Shelter S-250()/G
1 DC Power Cable
1 Antenna Mast AB-1339, 15 meters
1 Antenna, Band I
1 Antenna, Band III
1 Antenna Feed Horn, Band III
2 Antenna Cables, 45 feet
1 Antenna Cable, 65 feet
1 CX-11230 Cable, 1/4 mile
1 COMSEC TSEC/KY-57
1 Communication Modem MD-1270
or
Digital Data Modem MD-1231 (III Corps Only)
and
1 Orderwire Control Unit C-11878/T (III Corps Only)
1 Electronic Transfer Device KYK- 13
2 RF Amplifiers AM-7345/GRC-226
1 SHF Radio Set GRC-224 (if equipped)
1 RF Unit, Band I RT-1537/GRC-225
1 RF Unit, Band III RT-1538/GRC-226
2 Intermediate Frequency (IF) Cable Assemblies
2 Data Cable Assemblies

AN/TRC-190(V)2

1 Utility Truck M-1037
1 Generator PU-751, 5 kW
1 AC Power Cable, 15 feet
1 AC Power Cable, 35 feet
1 Electrical Shelter S-250
1 DC Power Cable
1 Antenna Mast AB-1339, 15 meters
1 Antenna, Band I
1 Antenna, Band III
1 Feed Horn Antenna, Band III
2 Antenna Cables, 45 feet

Major Components (Cont.)

1 Antenna Cable, 65 feet
1 26-Pair NAI Cable, 250 feet
1 NATO Analog Interface CV-4002
1 Communications Modem MD-1270
or
1 Multiplexer TD-1426 (HI Corps Only)
and
1 Orderwire Control Unit C-11878/T (III Corps only)
1 COMSEC TSEC/KY-57
1 Trunk Encryption Device TSEC/KG-194A
1 Electronic Transfer Device KYK-13
2 RF Amplifier AM-7345/GRC-226
1 RF Unit, Band I RT-1537/GRC-226
2 IF Cable Assembly
2 Data Cable Assembly
1 RF Unit, Band III RT-1538/GRC-226

AN/TRC-190(V)3

1 Utility Truck M-1037
1 Generator PU-751/M, 5 kW
1 AC Power Cable, 15 feet
1 AC Power Cable, 35 feet
1 Electrical Shelter S-250
1 DC Power Cable
3 Antenna Mast AB-1339, 15 meters
2 Feed Horn Antennas, Band III
2 Antenna, Band I AS-3875/GRC-226
2 Antenna, Band III AS-3876/GRC-226
6 Antenna Cable, 45 feet
3 Antenna Cable, 65 feet
1 CX-11230 Cable, 1/4 mile
1 Transmission Group Multiplexer/Demultiplexer (TC-MD)
1 Power Supply, +5 V
1 COMSEC, TSEC/KY-57

Major Components (Cont.)

1 Communications Modem MD-1270
or
1 Orderwire Control Unit C-11878/T (III Corps Only)
3 RF Amplifier AM-7345/GRC-226
1 SHF Radio Set GRC-224 (if equipped)
1 Electronic Transfer Device KYK-13
2 RF Unit, Band I RT-1537/GRC-226
2 RF Unit, Band III RT-1538/GRC-226
3 IF Cable Assembly
3 Data Cable Assembly

AN/TRC-190(V)4

1 Utility Truck M-1037
1 Generator PU-751/M, 5 kW
1 AC Power Cable, 15 feet
1 AC Power Cable, 35 feet
1 Electrical Shelter S-250
1 DC Power Cable
2 Antenna Mast, 15 meters
4 Antenna Cable, 45 feet
1 Antenna, Band I AS-3875/GRC-226
1 Antenna, Band III AS-3876/GRC-226
2 Antenna Cables, 65 feet
2 CX-11230 Cables, 1/4 mile
1 Communication Modem MD-1270
or
1 Digital Data Modem MD-1231 (III Corps Only)
and
1 Orderwire Control Unit C-11878/T (III Corps Only)
1 Electronic Transfer Device KYK-13
2 RF Amplifiers AM-7345/GRC-226
2 SHF Radios AN/GRC-224
1 COMSEC TSEC/KY-57
1 RF Unit, Band I RT-1537/GRC-226
1 RF Unit, Band III RT-1538/GRC-226
2 IF Cable Assembly
2 Data Cable Assernbly

AN/TRC-190(V)1
Multichannel Radio Terminal

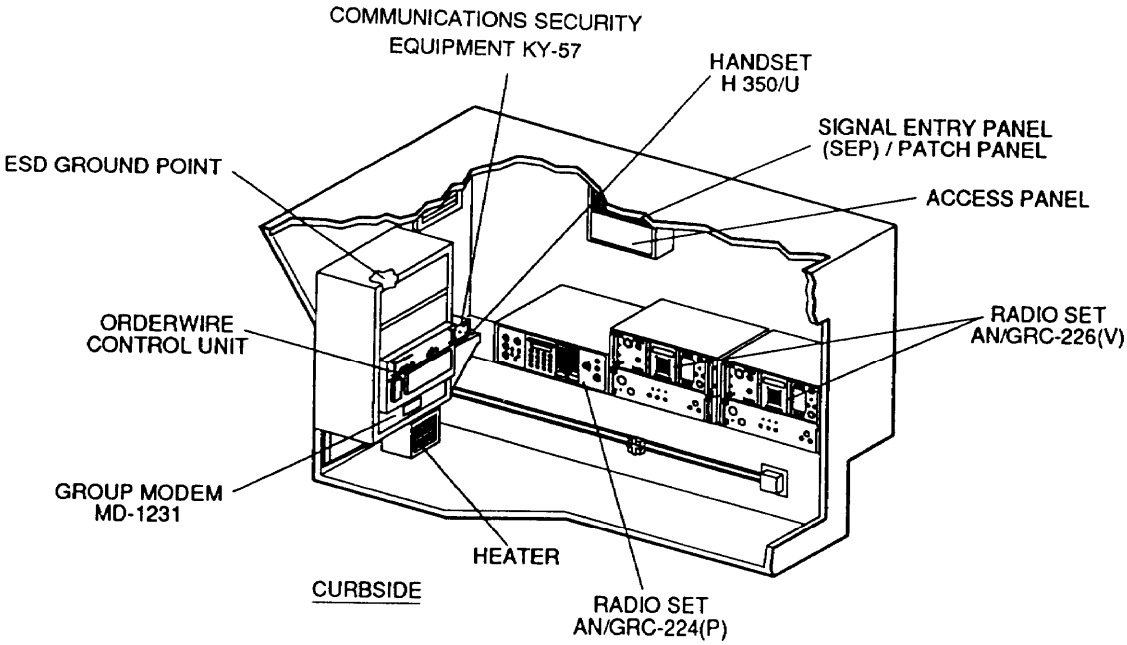

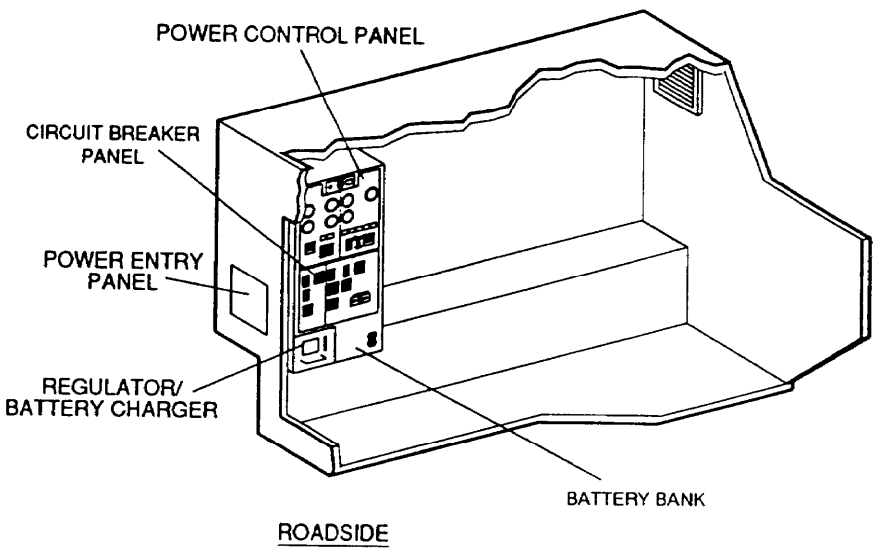

AN/TRC-190(V)2
Multichannel Radio Terminal

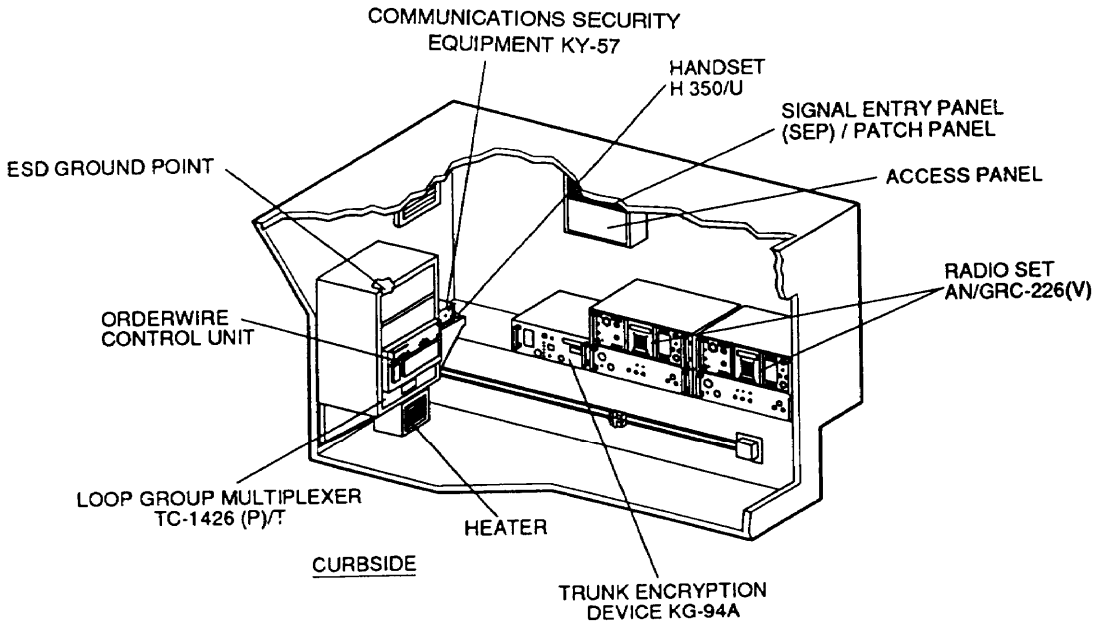

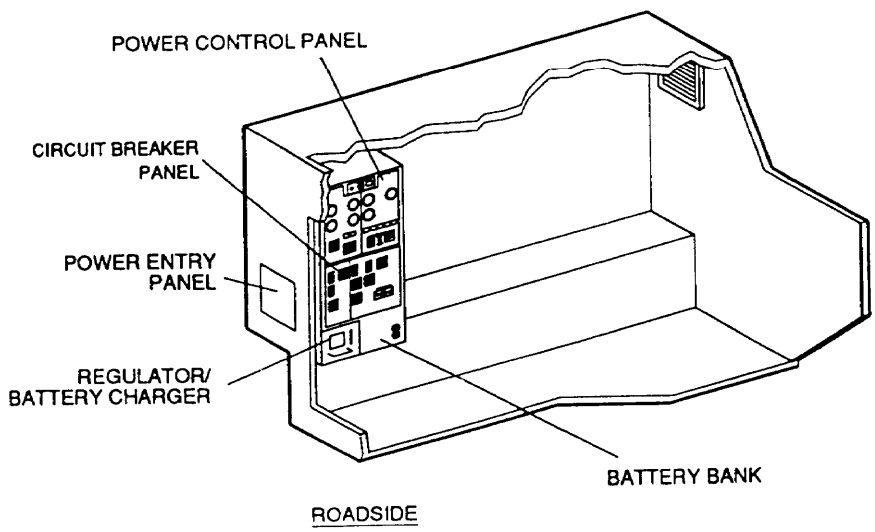

AN/TRC-190(V)3
Multichannel Radio Terminal

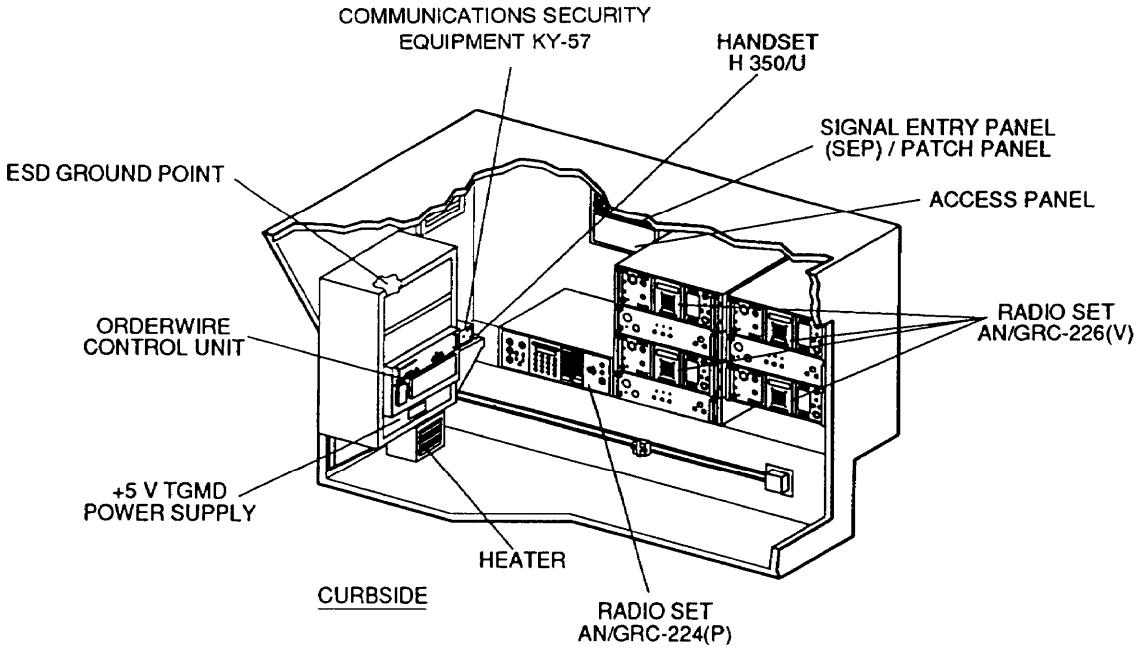

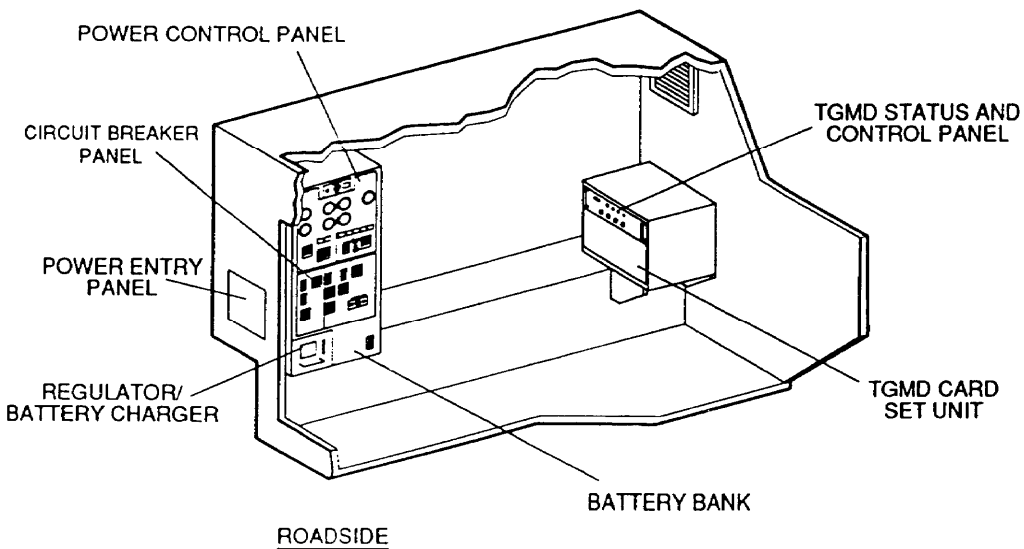

AN/TRC-190(V)4
Multichannel Radio Terminal

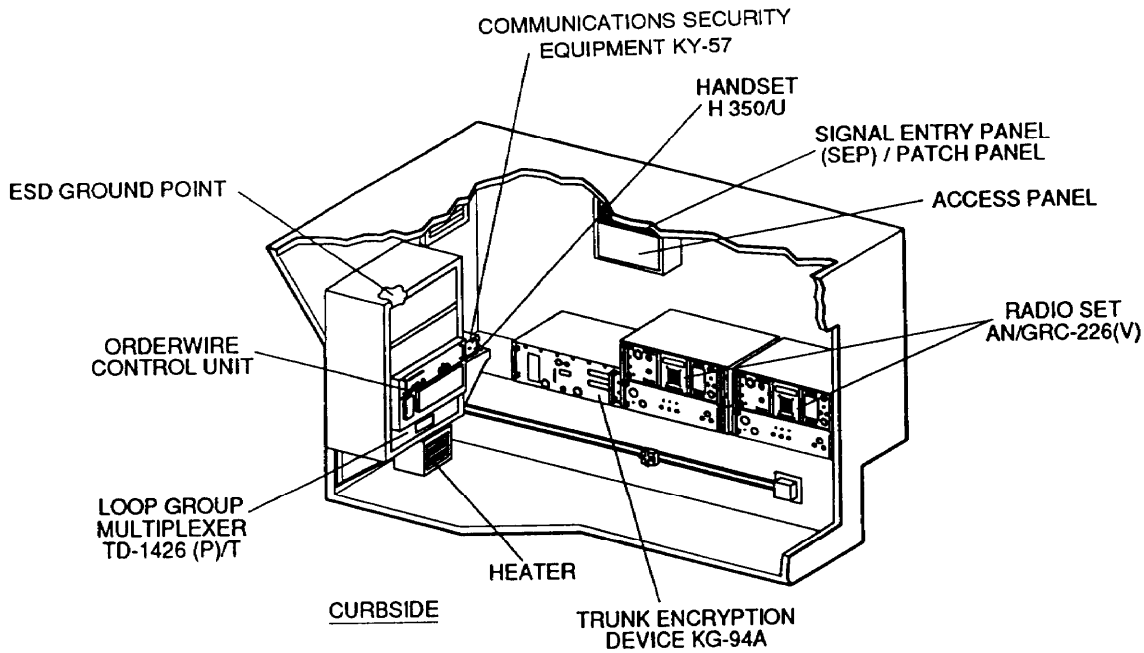

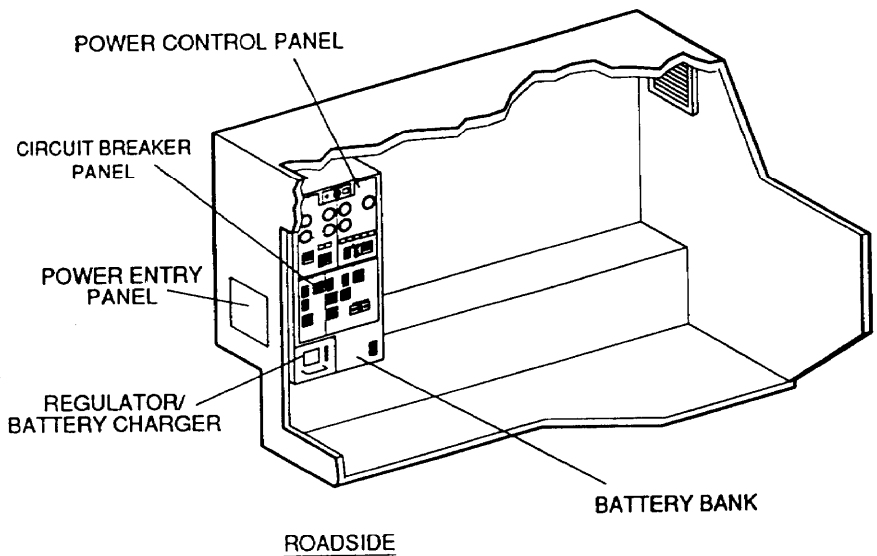

Section VII. Mobile Subscriber Equipment Contingency Communications

AN/TTC-50
Communications Central

NSN: 5895-01-349-8064

Reference: TM 11-5805 -786-12-2

General Information

The AN/TTC-50 Communications Central (CC) is a part of the communications parent switch (CCPS) and the contingency communications extension switch (CCES). It can perform as an originating affiliation, disaffiliation, duplication, and automatic subscriber finder. It also provides nodal control. While in transit, the CC can operate as an MSRT via one of four RT-1539A radio sets and associated equipment installed in the shelter. The radio set also provides full-duplex, encrypted radio transmissions between mobile subscribers within proximity of each other or a fixed or mobile subscriber in the network through a CC. The CC is comprised of an extended S-250E electrical equipment shelter mounted on a heavy HMMWV. It tows two PU-753/M, 10 kW, trailer-mounted, diesel generator set, which provides power when the CC is emplaced and operating as a switch.

Major Components

1 Shelter S-250E/G
1 Junction Box J-1077A/U
1 Generator PU-753/M, 10 kW
1 Electronic Transfer Device KYX-15/TSEC
1 RF Multicoupler CV-2391/TRC-191
1 Electronic Transfer Device KYK-13/TSEC
4 Radio Sets RT-1539
1 Group Logic Unit C-11865/TRC-191
1 Mast-Mounted RAU Antenna AS-3886/TRC-191
1 VINSON COMSEC Unit TSEC/KY-57
1 Antenna Mast AB-1339/G, 15 meters
1 Automatic Key Distribution Center, TSEC/KGX-93A
1 Data Processing Terminal AN/TSQ-154A
1 Switching Processor OL-386/TTC-39A
1 Frequency Oscillator O-1838/TTC-39A
1 Printer
1 Intercommunications Station LS-147

Major Components (Cont.)

4 Trunk Encryption Device TSEC/KG-194
1 Digital Computer AN/UYK-86(V)3
1 EL Display
1 RSS-D CP-1997
1 Keyboard
1 Packet Switch AN/TYC-20
1 TUNA, TSEC/HGF-96
8 Dual Loop Key Generators (LKG) KG-112
1 Environmental Control Unit
1 DNVT TA-1035/U
3 ThinLan Transceivers
1 VHF Whip Antenna AS-3885/TRC-191
1 CPS Headset Control

Parent Switch—4-Line Termination Units (LTUs)
Extension Switch—2-Line LTUs

Technical Characteristics

Power Requirements	Primary — 115 V AC, 60 Hz, single Phase
	Alternate — 28 V DC
	Emergency — 24 V DC
Data Rates	16 kb/s to 256 kb/s
CCPS	105 digital terminations (3 LTUs)
	12 digital terminations (J-1077)
	8 AUTOVON trunks
	8 Commercial trunks (1 LTU)
CCES	35 digital terminations (1 LTU)
	12 digital terminations (J-1077)
	8 AUTOVON trunks
	8 Commercial trunks (1 LTU)

AN/TTC-50
Communications Central

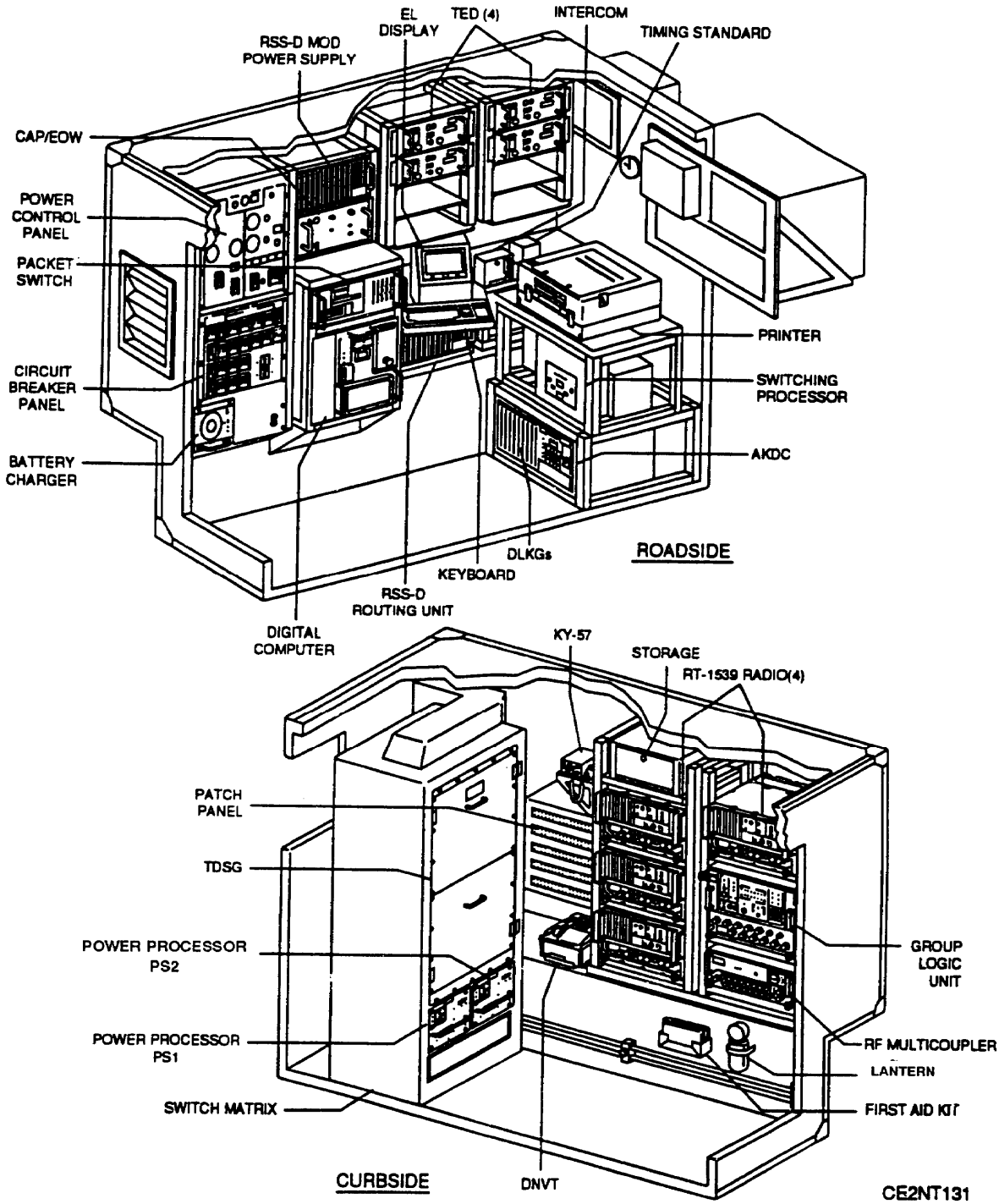

AN/TTC-51
Communications Switching Set

NSN: 5895-01-349-8065

Reference: TM 11-5895-1527-13P

General Information

The AN/TTC-51 Communications Switching Set (CSS) is a portable, automatic communications switching system. It provides automatic switching for local subscribers, commercial office access, and ten digital encrypted trunks. The CSS also provides an operator position, combat net radio interface (CNRI), and I/O computer interfaces. CSS connects to the CC AN/TTC-50, or other MSE parent nodes via LOS radio links or cable. The CSS is comprised of a communication modem, a trunk encryption device, a VINSON COMSEC device, and an electronic transfer device mounted in the CSS transit case. The CSS also is comprised of a UPS, switchboard, an optional signal data converter, and all associated cabling and-grounding equipment.

Major Components

1 Transit Case, including	1	Communication Modem
	1	Trunk Encryption Device KG-194A
	1	Electronic Transfer Device KYK-13
	1	VINSON COMSEC KY-57
	1	Handset H-350/U
	1	DNVT TA-1035/U
1 I/O Assembly Panel, including	1	HVA
	1	Commercial ESA
	1	Commercial Filter
Internal Cable Set:	1	UPS (28 V, 10 amp)
1 Storage Bag, including	1	Remote Commercial Office Interface Assembly

Major Components (Cont.)

External Cable Assemblies:

1 Signal Cable, Switchboard to Communications Modem
1 Signal Cable, Switchboard to I/O Panel
1 DC Power Cable, UPS to I/O Panel
1 AC Power Cable, 25 feet, AC source to UPS
1 Signal Cable, Commercial Office to I/O Panel
1 AC Power Cable, AC source to Switchboard

Technical Characteristics

Power Requirements . . . . . 115 V AC, 60 Hz, single phase

Performance Data-Switching Group . . . . . 10-digital trunks
16-digital loops (wire subscribers)
2 analog loops for commercial interphase
I/O interface
CNRI

AN/TTC-51
Communications Switching Set

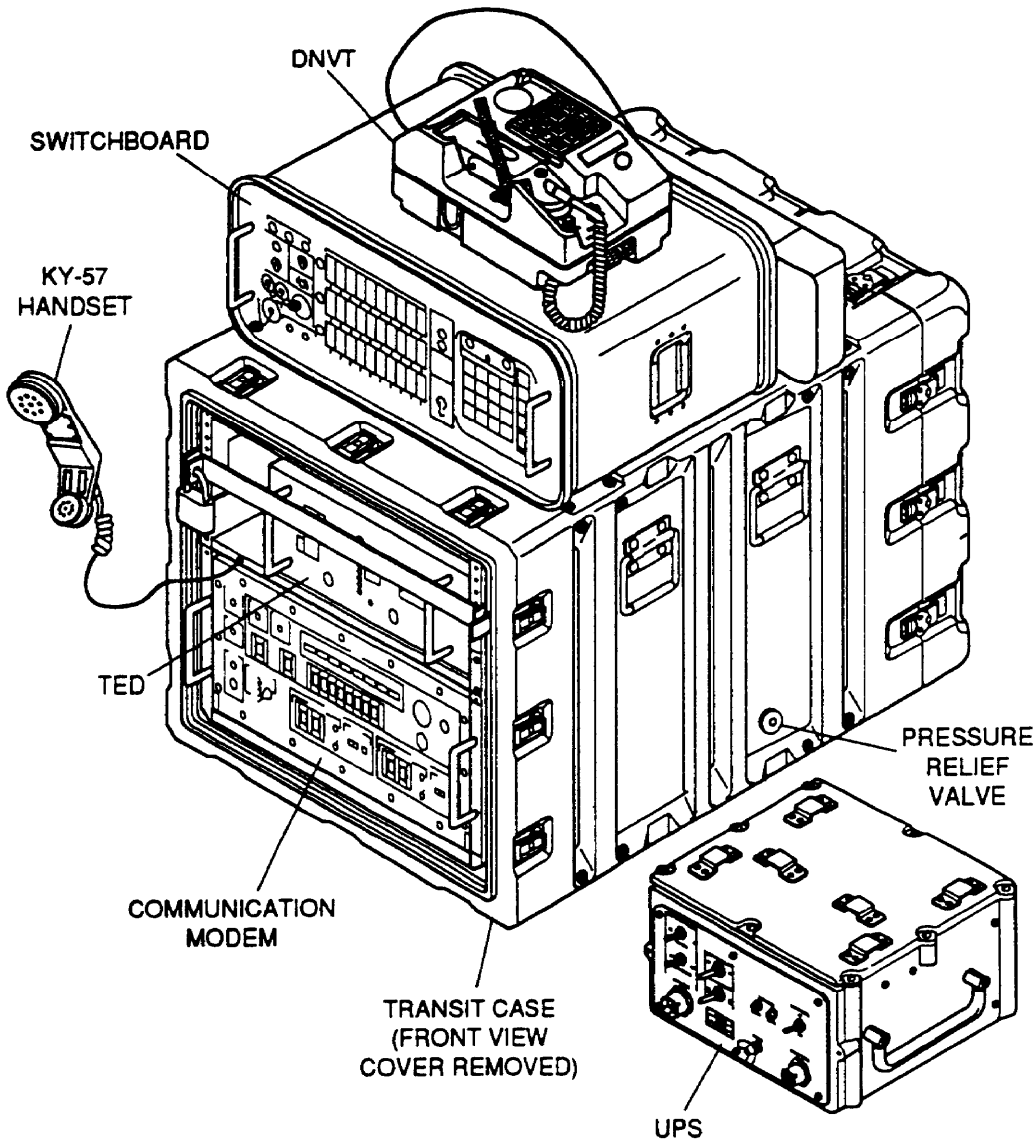

AN/TRC-198(V)l and AN/TRC-198(V)2
Line-of-Sight Multichannel Radio Terminal

NSN: 5820-01-349-9241 (AN/TRC-l98(V)l)
5820-01-349-9240 (AN/TRC-198(V)2)

Reference: TM 11-5820-1114-13-1

General Information

The AN/TRC-198(V)l and the AN/TRC- 198(V)2 LOS Multichannel Radio Terminal is part of the contingency communications package (CCP) and is used with the contingency communications parent switch (CCPS). The AN/TRC-198(V)1 is a transportable radio communications link between other CCPSs, contingency communications extension switches (CCESs) and other MSE nodes. The AN/TRC-198(V)l uses a maximum of three UHF radio sets which can be dismounted and used separately. The dismounted radio set is the AN/TRC-198(V)2. The shelterized version uses a standard S-250/G electrical equipment shelter transported on an M-1097, heavy shelter carrier HMMWV. A 200-amp alternator in the HMMWV provides DC power to the shelter, as an alternative to the primary power source, a PU-753/M, trailer-mounted, 10 kW, diesel generator.

Technical Characteristics

Power Requirements: ..... Primary input power— 115 V AC, 50 to 60 Hz, single phase
Alternate DC power — 28 V DC

Radio Transmission Data ..... UHF — 225 to 400 MHz (Band I)
1350 to 1850 MHz (Band III)

Transmission Capacity ..... Up to three simultaneous UHF transmissions

Major Components

	(V)1	(V)2
HMMWV, 10,000 lbs	1	0
S-250/G shelter	1	0
Generator PU-753/M, 10 kW	1	0
VINSON COMSEC Unit KY-57	1	1
Electronic Transfer Device KYK-13	1	1
Telephone Handset	1	1
AN/GRC-226(V) Radio Set:	3	1
Baseband Unit	3	1
RF Unit, Band I	3	1
RF Unit, Band III	3	1

Major Components (Cont.)

	(V)1	(V)2
Antenna, Band I	3	1
Antenna, Band III	3	1
Antenna Mast, 15 meters	1	1
Telephone Handset	1	0
AC Power Cable, 35 feet	1	0
AC Power Stub, 15 feet	3	1
CX-11230A Coaxial Cable		
Internal Cables Set	1	0
Antenna Cables Set	3	1
Communication Modem MD-1270	2	1
Dismount (V)2 Kit:		
Communication Modem Case	0	1
Radio Case 1	0	1
Radio Case 2	0	1
DC Power Supply	0	1
Power Cable Set	0	1
Signal Cable Set	0	1
HVA-9	0	3

AN/TRC-198(V)1 and AN/TRC-198(V)2 Mounted

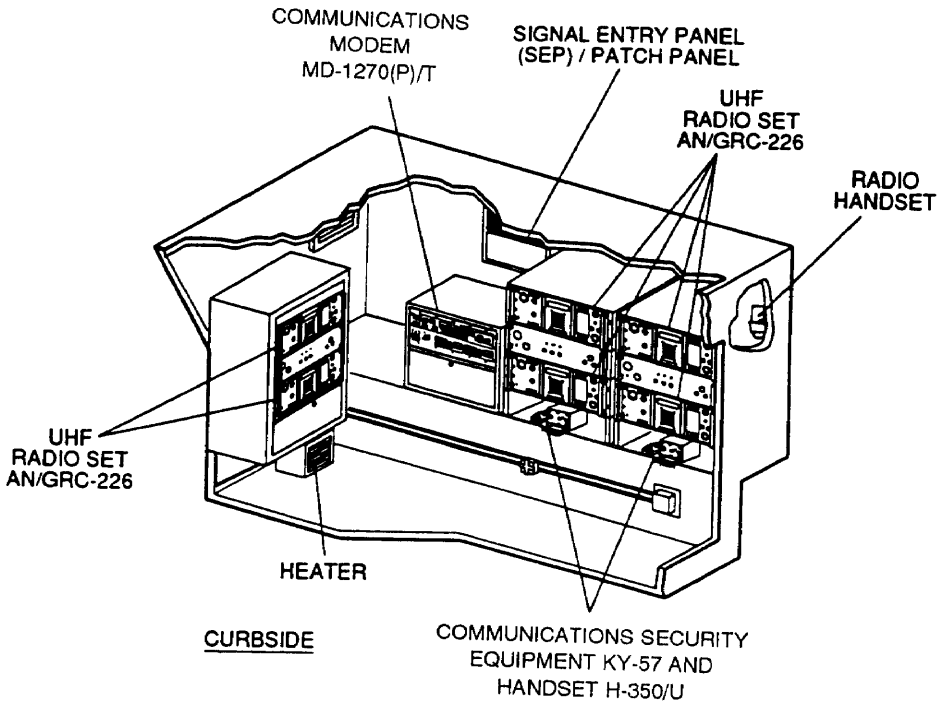

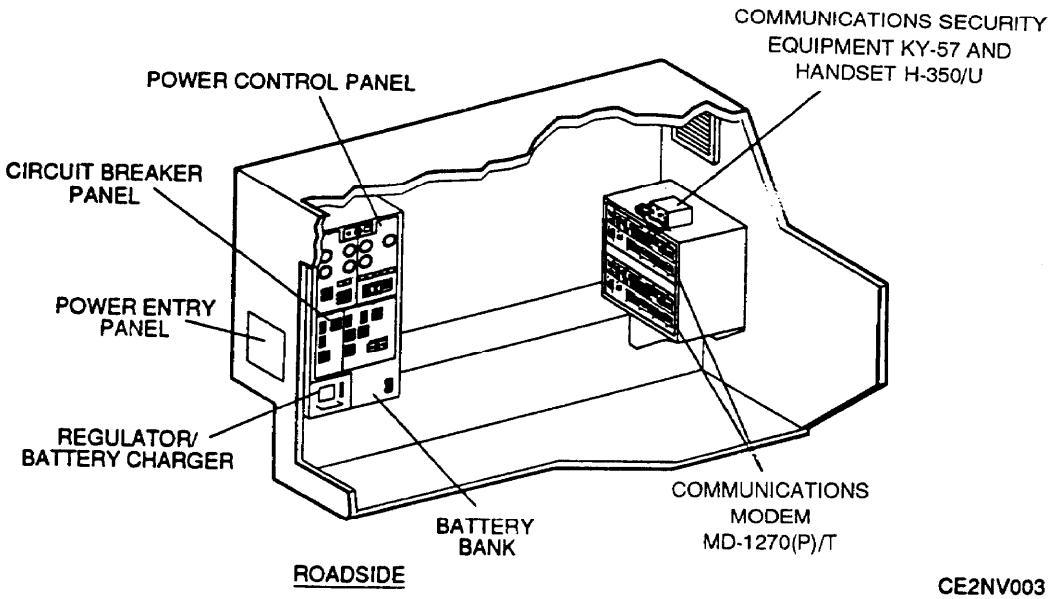

AN/TRC-198(V)1 and AN/TRC-198(V)2 Dismounted

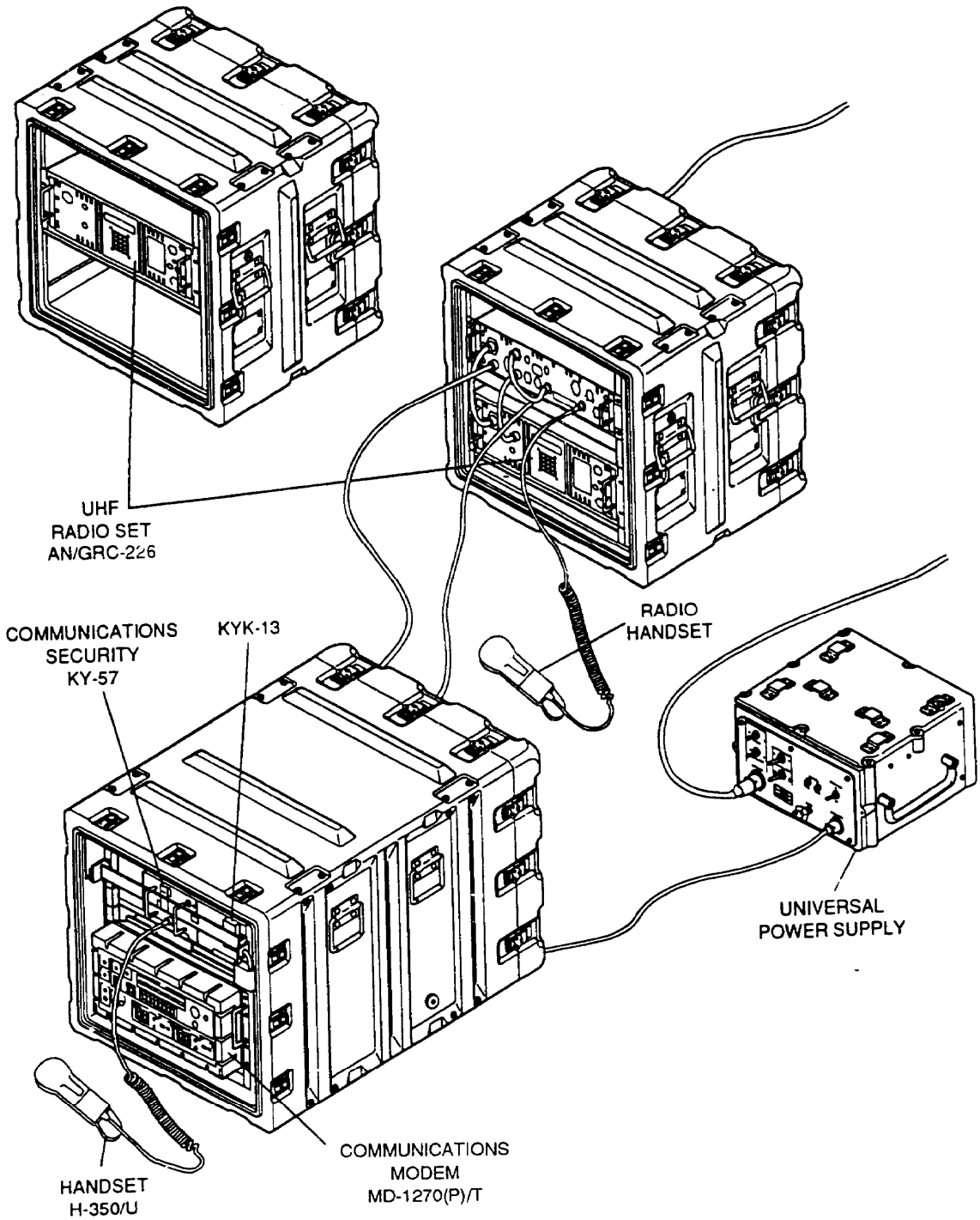

Glossary

Acronyms and Abbreviations

AAU	analog applique unit
AC	alternating current
ACP	Allied Communication Publication
ACT	automatic continuous tuning
AD	analog-to-digital
ADC	analog digital combiner
ADF	automatic direction finder
ADM	atomic demolition munitions
ADP	automatic data processor
AFSAT	Air Force satellite
AHIP	advance helicopter improvement program
AI	airborne intercept
ALCG	analog line conditioner group
AM	amplitude modulated
AME	amplitude modulation equivalent
AMME	automated message media equipment
amp	ampere
amp-hr	ampere-hour
ANDVT	advance narrow-band digital voice terminal
ant	antenna
AR	Army regulation
ASCII	American Standard Code for Information Interchange
ASI	alarm status indicator
ASR	airport surveillance radar
assy	assembly
ATACS	Army Tactical Communications Systems
ATC	air traffic control
ATCSS	Air Traffic Control Signaling System
attn	attention
auto	automatic
AUTODIN	Automatic Digital Network
AUTOSEVOCOM	automatic secure voice communications
AUTOVON	automatic voice network
AVOW	analog voice orderwire
AWG	American wire gauge
az	azimuth
BFO	beat frequency oscillator
BITE	built in test equipment

BP	binding post
bp/s	bits per second
BTU	British thermal unit
CBR	chemical, biological, radiological (also see NBC)
CCA	circuit card assembly
CD	cable driver
CDM	cable driver modem
CE	communications-electronics
CEG	common equipment group
CEP	circular error probable
CESE	communications equipment support element
ch	channel
CICM	communications interface controller module
CIP	communications interface processor
CIS	communications interface shelter
civ	civilian
cm	centimeter
CN	command network
CNCE	communications nodal control element
CNR	combat net radio
CNRI	combat net radio interface
coax	coaxial
COMMZ	communications zone
COMSEC	communications security
CONUS	continental United States
COU	cable orderwire unit
CP	command post
CPG	central processor group
CPS	contractor plant services
CPU	central processing unit
CSCE	communications system control element
CSLA	communications security logistics activity
CSP	call service position
CSS	combat service support
CW	continuous wave
DA	Department of the Army
DACB	data adapter control block
DAMA	demand assign multiple access
dB	decibel
dBm	decibels above (or below) one milliwatt
DCO	dial central office
DC	direct current
DCA	Defense Communications Agency
DCS	Defense Communications System
DCSI	data channel status indicators
DD	data devices

DDD	direct distance dial
demux	demultiplexer
DG	directional gyro
DGM	digital group multiplexer
DIBITS	digital in-band trunk signaling
div	division
DLED	digital line encryption device
DLTM	digital line terminating module
DME	distance measuring equipment
DNVT	digital nonsecure voice telephone
DOCS	Defense Operational Control System
DOW	data orderwire
DSCS	defense satellite communications system
DSDI	digital simple data interface
DSN	Defense Switching Network
DSVT	digital secure voice terminal
DTG	digital transmission group
DTH	down-the-hill
DTMF	dual tone multifrequency
DVOW	digital voice orderwire
ea	each
EAC	echelons above corps
EAM	emergency action message
ECB	echelons corps and below
ECU	environmental control unit
EHF	extremely high frequency
el	elevation
EOW	engineering orderwire
ETD	electronic transfer device
ext	exterior
FC	field circular
FCC	Flight Coordination Center
FDM	frequency division multiplex
FDMA	frequency division multiple access
FM	frequency modulated; field manual when used with a number
FN	force network
FOC	flight operations center
FSK	frequency shift keying
FSN	Federal stock number
ft	feet
g	gram
gal	gallon
GCA	ground controlled approach
GHz	gigahertz
GM	group modern
GMF	ground mobile forces

GMFSC	ground mobile forces satellite communications
GS	glide slope
HF	high frequency
HMMWV	high mobility multipurpose wheeled vehicle
HQ	headquarters
HSCDM	high speed cable driver modem
HSPR	high speed pulse restorer
Hz	hertz
I/O	input/output
ICU	interface control unit
IHFR	improved high frequency radio
ILS	instrurnent landing system
imp	impedance
in	inch
int	interior
INTACS	Integrated Tactical Communications System
IWCS	Integrated Wideband Communications Systems
JANAP	Joint Army-Navy-Air Force Publication
kb/s	kilobit per second
kc	kilocycles (superseded by kilohertz)
kg	kilogram
kHz	kilohertz
km	kilometer
kw	kilowatt
l	liter
lb	pound(s)
LCSP	local call service position
LDF	lightweight digital facsimile
LEN	large extension node
LENS	large extension node switch
LF	low frequency
LGM	loop group multiplexer
loc	localizer
LOS	line-of-sight
LSB	lower sideband
LSCDM	low speed cable driver modem
LSI	large-scale integration
LSPR	low speed pulse restorer
m	meter
mA	milliampere
MACOM	major Army command
max	maximum
MB	marker beacon
mb/s	megabits per second
mc	megacycles
MCW	modulated continuous wave

MECI	mission essential contingency items
MF	medium frequency
MGM	master group multiplexer
MHz	megahertz
mi	mile
MIL-STD	military standard
mist	miscellaneous
mod	modified
MPS	message processing shelter
MPU	message processing unit
MRTT	modular record traffic terminal
MSA	mobile subscriber access
MSE	mobile subscriber equipment
msec	millisecond
MSRT	mobile subscriber radiotelephone terminal
MT	metric ton
MTCC	modular tactical communications center
mtg	mounting
MTT	magnetic tape transport
MTU	magnetic tape unit
mux	multiplexer
mV	millivolt
mw	milliwatt
N/A	not applicable
NATO	North Atlantic Treaty Organization
NBC	nuclear, biological, chemical (also see CBR)
NC	node center
NCS	net control station
NICAD	nickel cadmium
NICS	NATO Integrated Communications System
no	number
nomen	nomenclature
norm	normal
NRI	net radio interface
NRZ	nonreturn to zero
NSK	narrow-frequency shift keying
NSN	national stock number
NTIA	National Telecommunications and Information Administration
NVIS	near vertical incidence skywave
OCONUS	outside continental United States
OCU	orderwire control unit
OW	orderwire
oz	ounce
PCM	pulse code modulation
PEP	peak-envelope power
PM	pulse modulated

pos	position
PPI	plan position indicator
PPM	pulse position modulation
PPS	pulses per second
pr	pair
PS	power supply
pwr	power
QRA	quick reaction antenna
qty	quantity
RADAR	radio detection and ranging
RASU	random access storage unit
RATT	radio teletypewriter
RAU	radio access unit
rcvr	receiver
rec	receive
RF	radio frequency
RIW	reliability improvement warranty
RLGM	remote loop group multiplexer
RMC	remote multiplexer-combiner
RP	rapid patch
RT	receiver-transmitter
RWI	radio wire integration
SAM	surface-to-air missile
SAT	satellite
SATCOM	satellite communication(s)
SCC-2	system control center-2
SCS	Special Communications System
SCT	single channel transponder
SDNRIU	secure digital net radio interface unit
SDSG	space division switching group
SEN	small extension node
SENS	small extension node switch
SEP	signal entry panel
SHF	super high frequency
SIF	selective identification feature {used with IFF)
sig	signal
SINCGARS	Single-Channel Ground and Airborne Radio Systems
sp	spare
SRWBR	shortwave wideband radio
SSB	single sideband
SST	single subscriber terminal
STANAG	Standardization Agreement
std	standard
SVT	subscriber voice terminals
sync	synchronize
sys	system

t	ton
TACAN	tactical air navigation
TACSAT	tactical satellite
TACSATCOM	tactical satellite communications
TAS	tactical automatic switch
TB	technical bulletin
TCP	tactical computer processor
TD	transmitter distributor
TDDM	time division digital multiplexer
TDF	tactical digital facsimile
TDM	time division multiplexing
TDSG	time division switching group
TED	trunk encryption device
tel	telephone (also see tp)
tg	telegraph
TGM	trunk group multiplexer
TM	technical manual
TOE	table(s) of organization and equipment
tp	telephone (also see tel)
TR	transmit receive
TRADOC	Training and Doctrine Command
TRI-TAC	Tri-Service Tactical Communications
TSSP	tactical satellite signal processor
TTY	teletypewriter
UHF	ultra high frequency
ULMS	unit level message switch
UPS	uninterrupted power system
US	United States (of America)
USA	United States Army
USB	upper sideband
UTM	universal transverse Mercator (grid)
V	volt
VA	volt-ampere
VDU	visual display unit
VF	voice frequency
VHF	very high frequency
VINSON	secure device for voice and FM communications
VOR	VHF omnidirectional range
W	watt
wpm	words per minute
yd	yard

References

READINGS RECOMMENDED

These readings contain relevant supplemental information.

Technical Manuals (TM)

11-2138	Terminal Box, TA-125/GT; Telephone Repeating coil Assembly, TA-145/GT; Maintenance Kit, MX-842/GT and Switchboard Signal, TA-123/GT. December 1983.
11-5135-15	Radio Set Control AN/GSA-7. December 1983.
11-5805-201-12	Operator's and Organizational Maintenance Manual for Telephone Set, TA-312/PT. August 1990.
11-5805-243-13	Operator's Unit and Intermediate Direct Support Maintenance Manual for Telephone Set TA-1/PT. September 1987.
11-5805-256-13	Operator's, Organizational and Direct Support Maintenance Manual for Telephone Set, TA-43/PT. February 1984.
11-5805-262-12	Operator's and Organizational Maintenance Manual for Switchboards, Telephone Manual SB-22/PT and SB-22A/PT. June 1990.
11-5805-298-15	Operator's, Organizational, Direct Support, General Support and Depot Maintenance Manual: Generators, Ringing Static, TA-248/TT and TA-248A/TT. August 1983.
11-5805-312-14	Operator's Organizational, Direct Support and General Support Maintenance Manual for Terminal, Telegraph AN/MSC-29A. May 1992.
11-5805-358-14-2	Operator's, Organizational, Direct Support and General Support Maintenance Manual for Terminal Sets, Telephone, AN/TCC-60 and AN/TCC-69. May 1992.
11-5805-367-12	Operator's and Organizational Maintenance Manual: Multiplexers, TD-202/U TD-203/U, TD-204/U, TD-352/U and TD-353/U; Restorers, Pulse Form, TD-206/G and TD-206GG and Converters, Telephone Signal, CV-1548/G and CV-1548A/G. June 1986.

11-5805-371-14-2	Operator's, Organizational, Direct Support and General Support Maintenance Manual; Terminal Sets, Telephone AN/TCC-65 and AN/TCC-65B. May 1992.
11-5805-382-12	Operator's and Organizational Maintenance Manual: Multiplexers, TD-660/G, TD-660A/G and TD-660B/G. July 1990.
11-5805-383-12	Operator's and Organizational Maintenance Manual: Multiplexer, TD-754/G. January 1989.
11-5805-479-14-2	Operator's, Organizational, Direct Support and General Support Maintenance Manual: Terminal Set, Telephone, AN/TCC-72 and AN/TCC-72A. May 1992.
11-5805-553-13	Operator's, Organizational and Direct Support Maintenance Manual for Telephone Signal Converter, CV-1918A(V)1/G and CV-1918A(V)3/G. March 1984.
11-5805-574-15	Operator's, Organizational, Direct Support, General Support, and Depot Maintenance Manual for Terminal, Telegraph, AN/TSC-58 (less power) and AN/TSC-58A (less power). May 1992.
11-5805-583-15	Operator's, Organizational, Direct Support, General Support Maintenance Manual (including repair parts and special tools list): Center, Communications Patching AN/TSC-76. May 1992.
11-5805-585-14-1	Operator's, Organizational, Direct Support and General Support Maintenance Manual for Telephone Terminal Set, AN/TCC-73(V)l, AN/TCC-73(V)2, AN/TCC73A(V)1, and AN/TCC-73A(V)2 in Shelter, Electrical Equipment, S-419B/TTC-73(V). September 1983.
11-5805-637-12	Operator's and Organizational Maintenance Manual: Buffer Data, TD-1065/G. June 1988.
11-5805-638-12	Operator's and Organizational Maintenance Manual for Multiplexer, Time Division, Digital, TD-1069/G. August 1984.
11-5805-650-12	Operator's and Organizational Maintenance Manual for Telephone Set, TA-838/TT. November 1986.
11-5805-683-12-1	Operator's and Organizational Maintenance Manual for Central, Message Switching Automatic, AN/TYC-39(V)l and AN/TYC-39(V)5. January 1987.

11-5805-693-12	Operator's and Organizational Maintenance Manual for Central Office, Telephone Automatic, AN/TTC-41(V)l, AN/TTC-41(V)2, AN/TTC-4l(V)3, AN/TTC-41(V)4 and Installation Kit, MK-1885/TTC-41(V). May 1992.
11-5805-693-12-1	Operator's and Organizational Maintenance Manual for Central Office, Telephone, Automatic, AN/TTC-41(V)5, AN/TCC-41(V)6 and AN/TTC-41(V)7. June 1989.
11-5805-695-12	Operator's and Organizational Maintenance Manual for Switchboard, Telephone, Manual SB-3614A(V)TT. July 1988.
11-5805-696-12	Opertor's and Organizational Maintenance Manual for Multiplexer, TD-1235(P)/TTC. November 1988.
11-5805-697-12	Operator's and Organizational Maintenance Manual for Multiplexer, TD-1236/G. November 1988.
11-5805-698-12	Operator's and Unit Maintenance Manual for Multiplexer, TD-1237(P)/G. November 1988.
11-5805-700-24P	Organizational, Direct Support and General Support Maintenance Repair Parts and Special Tools List (including depot maintenance repair parts and special tools) for modem, cable driver MD-1024/G. May 1985.
11-5805-701-12	Operator's and Organizational Manual for Restorer, Pulse Form, TD-1218/G. November 1988.
11-5805-702-12	Operator's and Organizational Maintenance Manual for Restorer, Pulse Form, TD-1219/G. November 1988.
11-5805-703-14	Operator's Unit, Direct Support and General Support Maintenance Manual for Test Set, Telephone, TS-3647/G. August 1990.
11-5805-704-12	Operator's and Organizational Maintenance Manual for modem, cable driver MD-1025/G. November 1988.
11-5805-705-12	Operator's and Organizational Maintenance Manual for Multiplexer, MD-1026(P)/G. November 1988.
11-5805-706-12	Operator's and Organizational Maintenance Manual for Multiplexer, TD-1233(P)/TTC. March 1992.
11-5805-707-12	Operator's and Organizational Maintenance Manual for Multiplexer-Combiner, TD 1234(P)/TTC. January 1992.

11-5805-711-13	Operator's Organizational and Direct Support Maintenance Manual; Multiplexer Sets, AN/FCC-98(V)l and AN/FCC-98(V)1X. January 1990.
11-5805-735-12	Combined Operation and Maintenance Instructions (Operator and Organizational Levels) Digital Nonsecure Voice Terminal, TA-954/TT. December 1983.
11-5805-747-12-1	Operator's and Unit Maintenance Manual for Central Office, Telephone, Automatic AN/TCC39(V)l and AN/TTC-39A(V)2. May 1989.
11-5805-749-12	Operator's and Unit Maintenance Manual Switchboard, Telephone SB-3614A(V)TT. August 1987.
11-5805-761-12&P	Operator's and Unit Maintenance Manual, Including Repair Parts and Special Tools List) Telephone, Digital, Nonsecure voice TA-1035/U. March 1989.
11-5805-764-13	Operator's Unit and Direct Support Maintenance Manual, Small Extension Node Switch: AN/ITC-48(V)l, AN/TTC48(V)2, AN/TTC-48A(V)l, AN/TTC-48A(V)2, AN/TTC-48B(V)1, AN/TTC-48B(V)2, AN/TTC-48C(V)l, AN/TTC-48C(V)2, AN/TTC-48C(V)3 and AN/TTC-48C(V)4. August 1992.
11-5805-765-12	Operator's and Unit Maintenance Manual, Large Extension Node Switch, AN/TTC-46, AN/TTC-46A(V)l, AN/TTC-46B(V)l and AN/TTC-46C(V)1. January 1992.
11-5805-766-12	Operator's and Unit Maintenance Manual, Node Center Switch, AN/TTC-47, AN/TTC-47A(V)l, An/TTC-47B(V)1 and An/TTC-47C(V)l. November 1992.
11-5805-778-12-1	Operator's and Unit Maintenance Manual for Central Office, Telephone, Automatic AN/TTC-39D. January 1991.
11-5805-786-12-2	Operator's and Unit Maintenance Manual for Communications Central AN/TTC-50. November 1992.
11-5815-331-14	Operator's Organizational, Direct Support and General Support Maintenance Manual: Radio Teletypewriter Set AN/VSC-2 and AN/VSC-2A. September 1989.
11-5815-332-15	Operator's, Organizational, Direct Support, General Support, and Depot Maintenance Manual: Radio Teletypewriter Set, AN/VSC-3. September 1989.

11-5815-334-10	Operator's Maintenance Manual for Teletypewriter Sets, AN/GRC-122, AN/GRC-122A, AN/GRC-122B, AN/GRC-122C, AN/GRC-122D, AN/GRC-122E, AN/GRC-142, AN/GRC-142A, AN/GRC-142B, AN/GRC-142C, AN/GRC-142D and AN/GRC-142E. July 1989.
11-5815-602-10	Operator's Manual for Terminal, Communications, AN/UGC-74A(V)3. September 1983.
11-5815-615-10	Operator's Manual for AN/UXC-7, Facsimile. January 1991.
11-5820-222-10	Operator's Manual for Radio Sets AN/VRC-24, AN/VRC-24A, AN/TRC-68 and AN/TRC-68A. July 1989.
11-5820-348-15	Organizational, Direct Support, General Support and Depot Maintenance Manual; Antenna Equipment, RC-292. January 1989.
11-5820-398-12	Operator's and Organizational Maintenance Manual (including repair parts and special tools list); Radio Set, AN/PRC-25 (including Receiver-Transmitter Radio, RT-505/PRC-25. January 1988.
11-5820-401-10-1	Operator's Manual for Radio Sets, AN/VRC-12, AN/VRC-43, AN/VRC-44, AN/VRC-45, AN/VRC-46, AN/VRC-47, AN/VRC-48 and AN/VRC-49 (used without an intercom system). January 1986.
11-5820-401-10-2	Operator's Manual: Radio Sets AN/VRC-12, AN/VRC-43, AN/VRC-44, AN/VRC-45, AN/VRC-46, AN/VRC-47, AN/VRC-48 and AN/VRC-49 (used with an intercom system). September 1990.
11-5820-467-15	Operator's, Organizational Direct Support, General Support, and Depot Maintenance Manual for Antenna Group, AN/GRA-50. July 1989.
11-5820-474-14	Operator's Organizational, Direct Support, and General Support Maintenance Manual: Radio Set, AN/GRC-109. July 1978.
11-5820-498-12	Operator's and Organizational Maintenance Manual: Radio Sets, AN/VRC-53, AN/VRC-64, AN/GRC-125 and AN/GRC-160 and Amplifier-Power Supply Groups OA-3633/GRC and OA-3633A/GRC. June 1990.
11-5820-509-12	Operator's and Organizational Maintenance Manual (including repair parts and special tools list) for Radio Set, AN/PRC-47. July 1974.
11-5820-510-12	Operator and Organizational Maintenance Manual: Radio Set, AN/PRC-41. January 1974.
11-5820-5110-12-1	Installation and Operation Manual (including repair parts and special tools list): Radio Set, AN/PRC-41A. April 1972.

11-5820-520-10	Operator's Manual for Radio Sets, AN/GRC-106 and AN/GRC-106A. May 1989.
11-5820-540-12	Operator's and Unit Maintenance Manual Radio Set, AN/GRC-103(V)l, AN/GRC-103(V)2, AN/GRC-103(V)3, AN/GRC-103(V)4 and Extension Kit, Mast, MK-1009/GRC-103(V). July 1988.
11-5820-562-14	Operator's, Organizational, Direct Support and General Support Maintenance Manual (including repair parts and special tools list): Repeater Sets, Radio AN/TRC-113(V)l, AN/TRC-113(V)2, AN/TRC-113(V)3, AN/TRC-113A(V)l, AN/TRC-113(V)2 and AN/TRC-113(V)3. May 1992.
11-5820-590-12-1	Operator's and Organizational Maintenance Manual (including repair parts and special tools lists): Radio Sets, AN/PRC-74B and AN/PRC-74C: Power Supplies, PP-4514/PRC-74 and PP-451A/PRC-74; Battery Boxes, CY-6121/PRC-74, CY-6314/PRC-74 and CY-631A/PRC-74. February 1988.
11-5820-595-12	Operator's and Organizational Maintenance Manual for Radio Set, AN/GRC-143. January 1992.
11-5820-602-15	Operator's, Organizational, Direct Support, General Support and Depot Maintenance Manual for Radio Terminal Set, AN/TRC-121. May 1992.
11-5820-615-12	Operator's and Organizational Maintenance Manual: Control, Radio Set. C-6709/G. June 1984.
11-5820-667-12	Operator's and Organizational Maintenance Manual: Radio Set, AN/PRC-77 (including Receiver-Transmitter, Radio, RT-841/ORC-77). February 1991.
11-5820-695-12	Operator's and Organizational Maintenance Manual for Radio Sets, AN/GRC-144(V)l, AN/GRC-144(V)2, AN/GRC-144(V)3 and AN/GRC-144(V)4. January 1988.
11-5820-713-15	Operator's, Organizational, Direct Support, General Support and Depot Maintenance Manual: Radio Terminal Set AN/GRC-163
11-5820-773-15	Operator's, Organizational, Direct Support, General Support and Depot Maintenance Manual: Radio Repeater Set, AN/TRC-138. May 1992.
11-5820-864-12-1 11-5820-864-12-2	Operator's and Unit Maintenance Manual Radio Repeater Set, AN/TRC-174. January 1989.

11-5820-865-12-1	Operator's and Unit Maintenance Manual Radio Terminal Set, AN/TRC-173. January 1989.
11-5820-865-12-2	Operator's and Unit Maintenance Manual, Vol. 2 for Radio Terminal Set, AN/TRC-173. January 1989.
11-5820-890-10-1 11-5820-890-10-2	Operator's Manual, Radio Sets: AN/PRC-119, AN/VRC-87, AN/VRC-88, AN/VRC-89, AN/VRC-90, AN/VRC-91 and AN/VRC-92, September 1992.
11-5820-894-14	Operator's, Organizational, Direct Support and General Support Maintenance Manual for Terminal Set, Radio, AN/TRC-151(V). May 1992.
11-5820-919-12	Operator's and Organizational Maintenance Manual for Radio Set AN/PRC-104A. January 1986.
11-5820-923-12	Operator's and Organizational Maintenance Manual for Radio Set AN/GRC-213. September 1990.
11-5820-926-12-1 11-5820-926-12-2	Operator's and Unit Maintenance, Radio repeater Set AN/TRC-138A. June 1990.
11-5820-931-12-1 11-5820-931-12-2	Operator's and Unit Maintenance, Radio Terminal Set AN/TRC-175. 11-August 1992.
11-5820-934-13-1-1	Operator's and Unit Maintenance Manual, Radio Terminal Set AN/TRC-170(V). April 1990.
11-5820-1028-12	Operator's and Maintenance Manual, Radio Set AN/GRC-222 (Also known as AMD-5 Digital Microwave Radio Set). August 1988.
11-5820-1114-13-1	Operator's, Unit and Direct Support Maintenance Manual for Line-of-Sight Multichannel Radio Terminal AN/TRC-198(V)l. November 1992.
11-5895-223-15	Organizational, Direct Support, General Support, and Depot Maintenance Manual (including repair parts list): Operations Central, Communications AN/MSC-31. January 1984.
11-5895-224-15	Operator's Organizational, Direct Support, General Support, and Depot Maintenance Manual (including repair parts and special tools list) for Operations Central, AN/MSC-32. August 1983.
11-5895-225-15	Operator's, Organizational, Direct Support, General Support, and Depot Maintenance Manual: Panel, Patching, Communications SB-675/MSC. April 1990.

11-5895-225-15-1	Operator's, Organizational, Direct Support, General Support and Depot Maintenance Manual: Panel, Patching Communication, SB-675A/MSC. July 1989.
11-5895-227-15	Organizational, Direct Support, General Support, and Depot Maintenance Manual (including repair parts and special tools list): Operations Center, Communications, AN/MSC-25 and AN/MSC-25A. July 1989.
11-5895-365-15	Organizational, Direct Support, General Support and Depot. Maintenance Manual (including repair parts and special tools lists): Message Centers, AN/GSQ-80, AN/GSQ-80A and AN/GSQ-80B. August 1986.
11-5895-389-12	Operator's and Organizational Maintenance Manual: Satellite Communication Terminal, AN/TSC-54. January 1983.
11-5895-453-14-2	Operator's, Organizational, Direct Support and General Support Maintenance Manual: Terminal Sets, Radio, ANTRC-145(V)l, AN/TRC-145(V)2, AN/TRC-145(V)3. May 1992.
11-5895-463-15	Operator's, Organizational, Direct Support, General Support, and Depot Maintenance Manual for Operation Center, Communications, AN/MSC-31A. January 1984.
11-5895-464-15	Operator's, Organizational, Direct Support, General Support, and Depot Maintenance Manual: Operations Central, Communications, AN/MSC-32A and AN/MSC-32B. June 1986.
11-5895-799-14	Operator's, Organizational, Direct Support, and General Support Maintenance Manual: Communications Technical Control Center AN/TSQ-84. May 1992.
11-5895-845-14	Operator's Organizational, Direct Support and General Support Maintenance Manual: Satellite Communications Terminal, AN/TSC-85(V)2. July 1989.
11-5895-846-14	Operator's, Organizational, Direct Support and General Support Maintenance Manual for Satellite Communications Terminal, AN/TSC-86. May 1983.
11-5895-1043-12	Operator's and Organizational Maintenance Manual for Satellite Communications Terminal, AN/GSC-39(V)2. November 1986.
11-5895-1050-12	Operator's and Organizational Maintenance Manual for Satellite Communications Terminal, AN/GSC-39(V)1. July 1990.

11-5895-1079-14-1	Operator's, Organizational, Direct Support or Field Maintenance Operations Instructions for Facsimile Set Tactical, AN/GXC-7A. August 1983.
11-5895-1104-10-1	Operator's Manual for Satellite Communications Terminal, AN/MSC-64(V)2. November 1991.
11-5895-1104-10-2	Operator's Manual for Satellite Communications Terminal, AN/MSC-64(V)1. September 1987.
11-5895-1127-10	Operator's Manual for Satellite Communications Terminals AN/TSC-93B(V)1. March 1991.
11-5895-1180-10	Operator's Manual for Radio Set AN/PSC-3. January 1992.
11-5895-1136-10	Operator's Manual for Satellite Communications Terminal, AN/MSQ-114. August 1989.
11-5895-1375-13	Operator's Unit and Direct Support Maintenance Manual, Management Facility AN/TSQ-154 and AN/TSQ-154(V)1. November 1992.
11-5895-1498-12-1 11-5895-1498-12-2 11-5895-1498-12-2-1	Operator's and Unit Maintenance Manual, System Control Center (SCC) Telephone Routing AN/TYQ-46(V). November 1992.
11-5895-1527-13P	Operator's Unit and Direct Support Maintenance Manual (including repair parts and special tools list) for Communications Switching Set AN/TTC-51. November 1992.
11-5985-263-15	Operator, Organizational, Direct Support, General Support and Depot Maintenance Manual (including repair parts and special tools lists) for Mast, AB-903/G. April 1979.
11-5985-357-13	Operator's, Organizational and Direct Support Maintenance Manual for Antenna Group, OE-254/GRC. February 1991.
11-5985-370-12	Operator's and Organizational Maintenance Manual for Antenna Group, OE-303/GRC. July 1984.
11-6110-201-12P	Operator's and Organizational Maintenance Repair Parts and Special Tool Lists for Distribution Boxes J-1077/U and J-1077A/U. July 1977.
11-6110-243-14P	Operator's, Organizational, Direct Support and General Support Maintenance Repair Parts and Special Tools Lists (including report maintenance repair part and special tools) for Distribution Boxes J-2317/U and J-2317/U. September 1976.

11-6625-648-12	Operator's and Organizational Maintenance Manual Test Set, Telephone, AN/PTM-7. April 1982.
11-7025-202-12	Operator's and Organizational Maintenance Manual for Multiplexer, TD-976/G and Pulse Form Restorer, TD-982/G. March 1983.
11-7025-221-10	Operator's Manual for Multiplexer, Digital, TD-1337(V)l/G, TD-1337(V)2/G, TD-1337(V)3/G and TD-1337(V)4/G. August 1982.
11-7025-267-12	Operator's and Unit Maintenance Manual Terminal Communications AN/UGC-144. August 1992.

Modification of Work Order (MWO)

11-5805-711-30-1	Modification of Multiplexer Sets, AN/FCC-98(V)2, AN/FCC-98(V)3, AN/FCC-98(V)2X and AN/FCC-98(V)l and AN/FCC-98(V)lX. January 1990.

Index

AB-15, 4-6
AB-558, 4-6
AB-621/G, 6-37
AB-903/G, 4-40, 4-41
AB-1244, 4-57
AB-1309(V) TRC Mast, 5-10, 6-62, 6-63
AM-3979/FRC-93, 4-34
AN/ARS-6, 4-32
AN/CSZ-1A, 4-32, 6-109, 6-110
ANDVT/KYV-5, 6-109
AN/FCC-98(V), 3-2, 3-3, 3-4
AN/FSC-9, 6-69, 6-70
AN/FSC-78, 6-71, 6-72
AN/GRA-6, 4-42, 4-43
AN/GRA-39, 4-6, 4-44, 4-45
AN/GRA-39A, 4-44, 4-45
AN/GRA-39B, 4-44, 4-45
AN/GRA-50, 4-28, 4-46
AN/GRA-71, 4-26, 4-47
AN/GRC-103(V), 5-2, 5-3
AN/GRC-103(V)4, 6-46
AN/GRC-106, 4-14, 4-15, 6-129
AN/GRC-106A, 4-14, 4-15
AN/GRC-109, 4-16, 4-17
AN/GRC-122, 6-131, 6-132
AN/GRC-125, 4-2, 4-10
AN/GRC-142, 6-129
AN/GRC-143, 5-4, 5-5, 6-35
AN/GRC-144, 5-6, 5-7
AN/GRC-160, 4-4, 4-10
AN/GRC-163, 5-8, 5-9
AN/GRC-193, 4-18, 4-19
AN/GRC-213, 4-20, 4-21
AN/GRC-222, 5-10, 5-11
AN/GRC-224(P), 7-7, 7-8
AN/GSA-7, 4-6, 4-48, 4-49, 4-54
AN/GSC-39, 6-71, 6-72
AN/GSC-40(V), 6-73, 6-74
AN/GSC-49, 6-78, 6-79
AN/GSC-52, 6-80, 6-81
AN/GSQ-80, 6-135, 6-136
AN/GSQ-80A, 6-135, 6-136
AN/GSQ-80B, 6-135, 6-136
AN/GXC-7A, 2-9, 2-10
AN/MSC-25, 6-137, 6-138
AN/MSC-29, 6-18, 6-19, 6-20
AN/MSC-29A, 6-18, 6-19, 6-20
AN/MSC-31, 6-139, 6-140, 6-143
AN/MSC-31A, 6-139, 6-140
AN/MSC-32, 6-141, 6-142, 6-143
AN/MSC-32A, 6-141, 6-142
AN/MSC-46, 6-82, 6-83
AN/MSQ-114, 6-84, 6-85
AN/MSC-64(V), 6-73,6-76, 6-77
AN/PRC-25, 4-2, 4-3
AN/PRC-41, 4-22, 4-23
AN/PRC-41A, 4-22, 4-23
AN/PRC-47, 4-24, 4-25
AN/PRC-74, 4-26, 4-27
AN/PRC-74B, 4-26
AN/PRC-74C, 4-26
AN/PRC-77, 4-4, 4-5, 4-50
AN/PRC-104A, 4-28, 4-29
AN/PRC-112, 4-30, 4-31
AN/PRC-112A(C), 4-32, 4-33
AN/PRC-119(V)1, 4-12, 4-13
AN/PSC-3, 6-111, 6-112, 6-113
AN/PSC-4, 6-121, 6-122
AN/PSC-5, 6-121, 6-122
AN/PSC-7, 6-119, 6-120
AN/PSN-11, 6-127, 6-128
AN/PTM-7, 3-39, 3-40
AN/TCC-38, 1-8
AN/TCC-39D, 6-7, 6-8, 6-9
AN/TCC-41(V), 4-53
AN/TCC-60, 6-23, 6-24, 6-25, 6-35
AN/TCC-61, 6-35, 6-37
AN/TCC-65, 6-26, 6-27, 6-33
AN/TCC-69, 6-23, 6-24, 6-25
AN/TCC-70, 5-8
AN/TCC-72, 6-28, 6-29

AN/TCC-73(V)1, 6-30, 6-31, 6-32, 6-37
AN/TCC-73(V)2, 6-30, 6-31, 6-32
AN/TCC-73A(V)1, 6-30
AN/TCC-73A(V)1, 6-30, 6-31, 6-32
AN/TCC-73A(V)2, 6-30, 6-31, 6-32
AN/TRC-110(V), 6-23, 6-56
AN/TRC-112/121, 6-50
AN/TRC-113(V)1, 6-33, 6-34
AN/TRC-117, 6-53
AN/TRC-121, 6-35, 6-36
AN/TRC-133A, 4-34, 4-35
AN/TRC-138, 6-37, 6-38
AN/TRC-138A, 6-39, 6-40, 6-41, 6-42, 6-59, 6-62
AN/TRC-145(V), 6-43, 6-44, 6-45
AN/TRC-151(V), 6-46, 6-47, 6-48, 6-49, 6-53
AN/TRC-152, 6-56
AN/TRC-170(V), 6-50, 6-51, 6-52
AN/TRC-173, 6-53, 6-54, 6-55, 6-62
AN/TRC-174, 6-56, 6-57, 6-58, 6-62
AN/TRC-175, 6-59,6-60, 6-61, 6-62
AN/TRC-190(V)1, 7-7, 7-37, 7-38, 7-41
AN/TRC-190(V)2, 7-7, 7-37, 7-38, 7-42
AN/TRC-190(V)3, 7-7, 7-37, 7-39, 7-43
AN/TRC-190(V)4, 7-7, 7-37, 7-40, 7-44
AN/TRC-191, 7-9, 7-10, 7-11
AN/TRC-198(V)1, 7-51, 7-52, 7-53, 7-54
AN/TRC-198(V)2, 7-51, 7-52, 7-53, 7-54
AN/TRQ-35(V), 4-36, 4-37
AN/TSC-54, 6-86, 6-87
AN/TSC-58, 6-18, 6-21, 6-22
AN/TSC-58A, 6-21, 6-22
AN/TSC-76, 6-148, 6-149
AN/TSC-85A, 6-88, 6-89, 7-28
AN/TSC-85B(V)1, 6-88
AN/TSC-85B(V)2, 6-88, 6-89, 6-91, 6-92
AN/TSC-86, 6-93, 6-94
AN/TSC-93A, 6-95, 6-96, 6-97, 6-98, 7-28
AN/TSC-93B, 6-95, 6-96
AN/TSC-93B(V)1, 6-99, 6-100
AN/TSC-93B(V)2, 6-101, 6-102
AN/TSQ-84, 6-150, 6-151, 6-152, 6-153
AN/TSQ-154, 7-12, 7-13
AN/TSQ-154A(V)1, 7-12, 7-13
AN/TTC-25, 1-10
AN/TTC-38, 1-10
AN/TTC-39, 1-10
AN/TTC-39A, 1-10
AN/TTC-39A(V)1, 6-4, 6-5, 6-6
AN/TTC-41(), 6-10, 6-11, 6-12
AN/TTC-46, 7-21, 7-22, 7-26
AN/TTC-46A(V)1, 7-21, 7-23, 7-26
AN/TTC-46B(V)1, 7-21, 7-24, 7-27
AN/TTC-46C(V)1, 7-21, 7-25, 7-26, 7-27
AN/TTC-47, 7-14, 7-15
AN/TTC-47A(V)1, 7-14, 7-16
AN/TTC-47B(V)1, 7-14, 7-17, 7-20
AN/TTC-47C(V)1, 7-14, 7-18
AN/TTC-48(V), 7-28
AN/TTC-48(V)1, 7-29
AN/TTC-48(V)2, 7-29
AN/TTC-48A(V)1, 7-30
AN/TTC-48A(V)2, 7-30
AN/TTC-48B(V)1, 7-31
AN/TTC-48B(V)2, 7-31
AN/TTC-48C(V)1, 7-32
AN/TTC-48C(V)2, 7-32
AN/TTC-48C(V)3, 7-33
AN/TTC-48C(V)4, 7-33
AN/TTC-50, 7-45, 7-46, 7-47
AN/TTC-51, 7-48, 7-49, 7-50
AN/TYC-39, 2-7
AN/TYC-39(V), 6-13, 6-14, 6-15, 6-16, 6-17
AN/TYQ-30(V), 6-143
AN/TYQ-30(V)1, 6-145, 6-146
AN/TYQ-30(V)2, 6-147
AN/TYQ-31, 6-143, 6-147
AN/TYQ-33(V), 2-13, 2-14, 2-15
AN/UGC-74A(V)3, 2-2, 2-3
AN/UGC-144, 2-4, 2-5, 2-6
AN/UXC-7, 1-18
AN/UXC-7A, 2-11, 2-12
AN/UYQ-43(V)1, 2-16, 2-17, 2-18
AN/UYQ-43(V)2, 2-16, 2-17, 2-18
AN/VRA-38A, 6-129
AN/VRC-12, 4-6, 4-7, 4-8, 4-9, 4-40, 4-50
AN/VRC-24A, 4-38, 4-39
AN/VRC-53, 4-2, 4-10, 4-11
AN/VRC-64, 4-4, 4-10, 4-11
AN/VRC-68A, 4-38, 4-39
AN/VRC-87(V)2, 4-12, 4-13
AN/VRC-88(V)3, 4-12, 4-13

AN/VRC-89(V)4, 4-12, 4-13
AN/VRC-90(V)5, 4-12, 4-13
AN/VRC-91(V)6, 4-12, 4-13
AN/VRC-92(V)7, 4-12, 4-13
AN/VRC-97, 7-12, 7-34, 7-35, 7-36
AN/VRC-465, 6-37
AN/VSC-2, 6-129,6-133
AN/VSC-3, 6-134
AN/VSC-7, 6-111, 6-114
AS-3036, 6-93
AS-1320/PRC-47, 4-24
AS-1321/PRC-47, 4-24
AS-1425/GRC, 5-10, 6-37
AS-1729, 4-6, 4-40, 5-8
AS-1852, 5-2
AS-1853, 5-2
AS-1854, 5-2
AS-2169/G, 5-8
AS-2259, 4-28
AS-3047, 5-2
AS-3199, 6-93
AT-271-A, 4-2
AT-784/PRC, 4-50, 4-51
AT-803/VR, 4-38
AT-892, 4-2
AT-912, 4-6
AT-984A/G, 4-52
BA-30, 1-6, 1-10, 1-22, 4-42, 4-44
BA-42, 1-8
BA-398/U, 4-2
BA-414/U, 4-42
BA-4386/U, 4-2
BB-451/U, 4-24
C-130, 6-86
C-2328, 4-44
C-2329, 4-44
C-6709/G, 1-10, 1-14, 4-6, 4-53,
CSCE, 6-143
CV-1548/G, 3-41, 3-42
CV-1548A/G, 3-41, 3-42
CV-1918A(V)/G, 1-27, 1-28
CX-4245, 3-9, 3-39, 3-40
CX-10831, 4-22
CX-11230/G, 3-9, 3-11, 3-27, 3-39, 3-40, 6-56, 7-28
DE-222/G, 6-71
Defense Satellite Communications System Program, 6-65, 6-66, 6-67, 6-68
Fascinator, 6-109
H-60, 1-6
H-350/U, 1-14, 1-15, 1-16
HST-4A, 6-115, 6-116
J-1077A/U, 1-29, 1-30
J-2317A/U, 1-29, 1-30
KG-84 A/C, 6-109
KY-57, 4-32, 6-109
KY-57/58, 6-109
KY-68, 7-12
KY-90, 4-54
KY-99, 6-129
KY-468, 4-47
LST-5B, 6-117, 6-118
LST-5C, 6-117, 6-118
MD-1023()/G, 3-5, 3-6
MD-1024()/G, 3-7, 3-8
MD-1025()/G, 3-9, 3-10
MD-1026()(P)/G, 3-11, 3-12
MD-1065()(P)/G, 3-13, 3-14
MILSTAR Ground Command Post, 6-103, 6-104
MOD-40/8B, 2-7, 2-8
MSE General Information, 7-2
Multichannel Satellite Communication Terminals, 6-64
MX-4498, 4-47
OE-254()/GRC, 4-6, 4-55, 4-56
OE-303, 4-57, 4-58
OL-489/TYQ-46(V), 7-5, 7-6
OL-490/TYQ-46(V), 7-3, 7-4
PP-665, 4-6
PP-2953, 4-6, 6-37
PU-753/M, 7-14
R-442, 4-6
RC-292, 4-2, 4-59, 4-60
RT-246, 4-6
RT-695, 4-22
RT-695A, 4-22
RT-841, 4-4
RT-505, 4-2
RT-505A, 4-2
RT-505/PRC-25, 4-52
RT-524, 4-6, 5-8

RT-718, 4-34
RT-841/PRC-77, 4-52
RT-1539A
S-280A, 4-34, 6-93
SB-22/PT, 1-22, 1-23
SB-22A/PT, 1-22, 1-23
SB-249 TT/C, 1-27
SB-675/MSC, 6-150
SB-1398/GTA-14(V), 1-27
SB-3614/TT, 1-10
SB-3614/AT, 1-10
SB-675/MSC, 6-150, 6-154, 6-155
SB-675A/MSC, 6-154, 6-155, 6-156
SB-3614(V)/TT, 1-24, 1-25, 1-26
SB-3614A(V)/TT, 1-24, 1-25, 1-26
SCS Functional Block Diagram, 6-75
SCAMP, 6-125, 6-126
SINCGARS, 6-109
SMART-T, 6-105, 6-106
STAR-T, 6-107, 6-108
STICS, 6-109
SUNBURST, 6-109
TA-1/PT, 1-2, 1-3
TA-222/PT, 1-22
TA-236/FT, 1-4, 1-5
TA-248/TT, 1-31, 1-32
TA-312/PT, 1-6, 1-7
TA-341/TT, 1-8, 1-9, 1-10
TA-838/TT, 1-10. 1-11
TA-938/G, 1-12, 1-13
TA-954/TT, 1-14, 1-15
TA-955, 1-6
TA-977/PT, 1-22
TA-125/GT, 1-33, 1-34
TA-1035/U, 1-18, 1-19, 7-12
TA-1042A/U, 1-20, 1-21
TD-202/U, 3-15, 3-16
TD-204/U, 3-17, 3-18
TD-660/G, 3-19, 3-20
TD-660A/G, 3-19, 3-20
TD-660 B/G, 3-19, 3-20
TD-754/G, 3-17, 3-18
TD-976/G, 3-11, 3-21, 3-22, 6-30
TD-1065/G, 3-23, 3-24, 6-27, 6-30, 6-46
TD-1069/G, 3-25, 3-26, 6-26, 6-46
TD-1218()/G, 3-43, 3-44, 3-45
TD-1219()/G, 3-43, 3-44, 3-45
TD-1233()/TTC, 3-27, 3-28
TD-1234()/TTC, 3-29, 3-30
TD-1235()/TTC, 3-31, 3-32
TD-1236()/G, 3-33, 3-34
TD-1237()/G, 3-35, 3-36
TD-1337(V)/G, 3-37, 3-38
TD-206B/G, 3-39, 3-40
TM-184, 1-33, 1-34
TS-3647()/G, 3-43, 3-44, 3-45
TSEC/KG-27, 5-2, 6-27, 6-46
TSEC/KY-8, 4-6
TSEC/KY-38, 4-22
TSEC/KY-57, 4-4, 4-6
TSEC/KY-68, 1-16, 1-17
TSEC/KY-99, 4-38
TSEW/KW-7, 6-18
TSQ-190(V), 6-123, 6-124
U-79/U, 1-6
WD-1/TT, 1-2, 4-44

FM 24-24
29 DECEMBER 1994

By Order of the Secretary of the Army:

GORDON R. SULLIVAN
General, United States Army
Chief of Staff

Official:

MILTON H. HAMILTON
Administrative Assistant to the
Secretary of the Army
07641

DISTRIBUTION:

Active Army, USAR, and ARNG: To be distributed in accordance with DA Form 12-11 E, requirements for FM 24-24, *Signal Data References: Signs/Equipment* (Qty rqr block no. 5241)

☆ U.S. GOVERNMENT PRINTING OFFICE: 1994-628-027/20083