FM 24-19

RADIO OPERATOR'S HANDBOOK

DISTRIBUTION RESTRICTION: Distribution authorized to U.S. Government agencies and their contractors only to protect technical or operational information from automatic dissemination under the International Exchange Program or by other means. This determination was made on 15 October 1990. Other requests for this document will be referred to Commander, U.S. Army Signal Center and Fort Gordon, ATTN: ATZH-DHL, Fort Gordon, GA 30905-5075.

DESTRUCTION NOTICE: Destroy by any method that will prevent disclosure of contents or reconstruction of the document.

HEADQUARTERS, DEPARTMENT OF THE ARMY

Field Manual
No 24-19

*FM 24-19
Headquarters,
Department of the Army
Washington, DC, 24 May 1991

Radio Operator's Handbook

Contents

Page

Preface xiii

Chapter 1
Radio and Radio Teletypewriter Sets

Section I.
Radio Set AN/GRC-106

Installation Procedures 1-0
Prestart Procedures 1-0
Starting Procedures 1-1
Tuning Procedures 1-2
Stopping Procedures 1-5

DISTRIBUTION RESTRICTION: Approved for public release; distribution is unlimited.

*This publication supersedes TC 24-19, 24 June 1985.

Section II. Radio Teletypewriter Set AN/VSC-2

	Page
Installation Procedures	1-7
Prestart Procedures	1-7
Starting Procedures	1-8
Tuning Procedures	1-11
Stopping Procedures	1-14
Simplified Installation Procedures Using TSEC/KW-7	1-15
Simplified Installation Procedures Using TSEC/KG-84A	1-20

Section III. Radio Teletypewriter Set AN/VSC-3

Operating Instructions	1-25
Prestart Operating Procedures	1-25
Starting Procedures	1-27
Radio Set AN/GRC-106(*) Starting and Tuning Procedures	1-31
Intercommunications Set AN/VIC-1(V) Starting Procedures	1-35
Intercommunications Set AN/VIC-1(V) Local Operation	1-36
Stopping Procedures	1-38
Radio Teletypewriter Set AN/VSC-3(*) Cabling Diagrams	1-38

Section IV. Radio Teletypewriter Set AN/GRC-122/142

Installation Procedures	1-41
Major Power Switches	1-41
Prestart Procedures	1-43
Starting Procedures	1-46

	Page
Tuning Procedures	1-50
Operating Communications Terminal AN/UGC-74 (in the ICT State)	1-54
Stopping Procedures	1-57
Troubleshooting	1-59
(Plain and C Models) Power Distribution Panel	1-66
(A, B, and E Models) Power Distribution Panel	1-68
OWR or DX Inverters	1-71
Shelter	1-71
Operation	1-73

Section V.
Radio Set AN/GRC-26D

Installation Procedures	1-86
Prestart Procedures	1-86
Starting and Preset Procedures	1-88
Tuning Procedures	1-92
Stopping Procedures	1-94

Section VI.
Radio Teletypewriter Set AN/GRC-46

Installation Procedures	1-96
Preoperational Procedures	1-96
Prestart Procedures	1-97
Starting Procedures	1-99
FSK Reception	1-100
Page Printer and Reperforator-Transmitter Operation	1-106
FSK Transmission	1-109
Stopping Procedures	1-111

Page

Section VII.
Radio Set AN/FRC-93

Description 1-112
Installation Procedures 1-113
Preliminary Checks 1-113
Receiver Tuning 1-114
Transmitter Tuning 1-115
VOX Adjustment 1-116
Amplifier Tuning 1-118
Power Indications 1-121

Section VIII.
Radio Set AN/VRC-64

Operating Procedures 1-123

Section IX.
Radio Set AN/VRC-12 Series

Installation Procedures 1-123
Operating Procedures 1-125

Section X.
NRI System AN/VRC-12

Installation Procedures 1-126
Prestart Procedures 1-128
Starting and Tuning Procedures 1-128
Stopping Procedures 1-129

Section XI.
Radio Set Control Group AN/GRA-6

Installation Procedures (with Radio Set AN/GRC-106) 1-130
Operating Procedures 1-131

Section XII.
Radio Set Control Group AN/GRA-39

	Page
Installation Procedures	1-132
Operating Procedures	1-133
Installation Procedures (using the AN/GRA-39, Receiver/Transmitter RT-524, and Switchboard SB-22/PT)	1-134
Presets and Adjustments	1-136

Section XIII.
Radio Set AN/PRC-77/25

Operating Procedures	1-137

Section XIV.
Radio Set AN/PRC-104A

Installation and Operating Procedures	1-139
Preoperational Checks	1-144
Presets	1-144
Energizing Procedures	1-145
Tuning Procedures	1-146
Test Procedures	1-146
Operating Procedures	1-147
Modes of Operation	1-148
Stopping Procedures	1-151
Disassemble and Transport Procedures	1-151
Operator Daily and Weekly PMCS	1-152

Section XV.
Radio Set AN/GRC-213

Description	1-155
Installation Procedures	1-157
Operating Procedures	1-158
Preoperational Checks	1-159

	Page
Presets	1-160
Energizing Procedures	1-161
Tuning Procedures	1-162
Stopping Procedures	1-162
Modes of Operation	1-163
Operator Daily and Weekly PMCS	1-165
Operator Troubleshooting	1-167
Equipment Performance Check (EPC)	1-167

Section XVI.
Radio Set AN/GRC-193A

Description	1-169
Installation Procedures	1-170
Operating Procedures	1-171
Preoperational Checks	1-172
Presets	1-173
Energizing Procedures	1-174
Tuning Procedures	1-175
Stopping Procedures	1-176
Modes of Operation	1-177
Preventive Maintenance Checks and Services (PMCS)	1-179
Operator Troubleshooting	1-184

Section XVII.
Single-Channel Ground and Airborne Radio System (SINCGARS) and AN/TSC-124 (SCOTT)

SINCGARS	1-196
AN/TSC-124 (SCOTT)	1-197
Regency Net System	1-199

Chapter 2
Generator Sets

Section I.
Generator Set 10 kW (PU-619)

Installation Procedures 2-1
Prestart Procedures 2-4
Starting Procedures 2-5
Stopping Procedures 2-6

Section II.
Generator Set 5 kW (PU-620)

Prestart Procedures 2-7
Starting Procedures 2-8
Stopping Procedures 2-9

Section III.
Generator Set 3 kW (MEP-026A)

Installation Procedures 2-10
Prestart Procedures 2-11
Electrical Starting Procedures 2-12
Manual Starting Procedures 2-13
Stopping Procedures 2-14

Chapter 3
Antennas 3-0

Section I.
Antenna Selection 3-0

Section II.
Whip Antenna 3-2

Section III.
Antenna RC-292 3-5

Section IV.
Antenna Group OE-254/GRC — **Page**

Description 3-6
Installation 3-7

Section V.
Doublet Antenna

Determining Doublet Antenna Length 3-19
Determining Doublet Antenna Height 3-20
Orientation 3-21
Installation Using AB-155A/U 3-21

Section VI.
NVIS Antenna AS-2259/GR

Description 3-24
Installation 3-26

Section VII.
Field Expedients for Antennas 3-32

Section VIII.
Grounding Systems 3-35

Chapter 4
Communications Security Equipment

Section I.
TSEC/KY-8

Programming Instructions 4-1
Operating Instructions (with Remote Control Unit) 4-1
Operating Instructions (without Remote Control Unit) 4-2

Section II. TSEC/KY-38	Page
Programming Instructions	4-3
Operating Instructions	4-4
Local Remedy for Minor Problems	4-5
Section III. HYL-3/TSEC	
Prestart Operating Procedures (All Modes)	4-6
Retransmission Procedures	4-6
Section IV. TSEC/KY-57	
Installation in Manpack Operations	4-7
Loading Procedures	4-8
Operating in the SECURE Mode	4-10
Section V. TSEC/KY-65	
Installation in Manpack Operations	4-11
Installation in Vehicle Operations (AN/GRC-193A)	4-13
Installation in Vehicle Operations (AN/GRC-213)	4-13
Loading Procedures	4-14
Operations	4-17
Section VI. TSEC/KG-84A	
Description	4-18

Chapter 5
Operating Procedures

Page

Section I.
Radiotelephone Procedures

Phonetic Alphabet 5-1
Numerical Pronunciation 5-2
Prowords Listed Alphabetically 5-4
Opening a Net (Nonsecure Voice) 5-9
Opening a Net (Secure Voice) 5-10
Radio Checks 5-10
Passing Message Traffic 5-11
Station Entering Net 5-12
Station Leaving Net 5-12
Closing a Net (Nonsecure Voice) 5-13
Closing a Net (Secure Voice) 5-13
Radiotelephone Message Format 5-13

Section II.
Radio Teletypewriter Procedures

Prosigns 5-17
Precedence Prosigns (Interservice Use) 5-19
Frequently Used Operating Signals 5-20
Machine Functions 5-26
Establishing Radio Teletypewriter Communications (Continuous Tuning Sets) 5-26
Garbled Transmission Received From E6T 5-26
Establishing Radio Teletypewriter Communicatons (Digital Tuning Sets) 5-27
Opening a Net 5-27
Opening a Directed Net 5-28
Sequence of Answering 5-28
Station Entering Opened Net 5-29

	Page
Closing a Net	5-29
Teletypewriter Message Format	5-30
Teletypewriter Repetition Procedures	5-30
Teletypewriter Interrogation Procedures	5-35

Section III.
Radiotelegraph Procedures

Code Characters	5-38
Prosigns	5-39
Operating Signals	5-40
Opening a CW Net Using Authentication (For Digital Tuning Radio Sets such as the AN/GRC-106 and AN/PRC-70/74)	5-42
Tuning Station on a Net (For Continuous Tuning Radio Sets such as the AN/GRC-19, AN/GRC-46, and AN/GRC-26D)	5-42
Making a Free Net a Directed Net	5-43
Making a Directed Net a Free Net	5-43
Closing a CW Net Using Authentication	5-44
Closing a CW Net Using Authentication (When closing for a certain period of time)	5-44
Radiotelegraph Message Format	5-45
Radiotelegraph Message Repetition Procedures (Identification of Parts or Portions of Messages)	5-49
Repetition After Receipt	5-50
Verification	5-50
Acknowledgements	5-51

	Page
Section IV. NRI Calls	5-51
Section V. Operator Number Sheet and Circuit Log	
Operator Number Sheet	5-55
Circuit Log	5-57
Section VI. Electronic Warfare	
Jamming	5-60
Implementing ECCM Procedures	5-61
MIJI Reporting	5-62
Section VII. Using the SOI	
Encode and Decode Messages Using KTC-600 Tactical Operations Code	5-66
Encrypt/Decrypt Numbers and Grid Zones	5-66
Authentication Using KTC-1400D	5-67
Section VIII. World Time Zone Conversion Chart	5-67
Section IX. United States Message Text Format	5-68
Glossary	Glossary-1
References	References-1

Preface

Purpose and Scope

This field manual gives the single-channel radio operator a reference for cabling, operating, remoting, and trouble-shooting single-channel radio teletypewriter sets and the power generating sets used with them. This manual is a ready reference for some basic radio communications procedures. It is designed for carrying in the pocket. The information is detailed only to the extent needed as a quick reference for day-to-day operations. For more complete details, refer to the respective TM, ACP, or FM.

User Information

The proponent of this publication is HQ TRADOC. Your comments on this publication are encouraged. Submit changes for improving this publication on DA Form 2028 (Recommended Changes to Publications and Blank Forms) and key them to pages and lines of text to which they apply. If DA Form 2028 is not available, a letter is acceptable. Provide reasons for your comments to ensure complete understanding and proper evaluation. Forward your comments to Commander, United States Army Signal Center and Fort Gordon, ATTN: ATZH-DTL, Fort Gordon, Georgia 30905-5075.

CHAPTER 1
Radio and RadioTeletypewriter Sets

Section I. Radio Set AN/GRC-106

Installation Procedures

STEP	ACTION
1	Drive ground rod into ground.
2	Fasten ground strap to top of ground rod and to binding post on mast base bracket.
3	Saturate ground around the ground rod with water.
4	Assemble three each MS-116, one each MS-117, one each MS-118, antenna tip, and the cover for use with the 15-foot whip antenna.
5	Ensure vehicle battery cover and battery caps are removed.

Radio Set AN/GRC-106

Prestart Procedures

STEP	UNIT	CONTROL AND SWITCH	POSITION OR ACTION
1	Vehicle	IGNITION switch	OFF
2	RT-662 or RT-834	SERVICE SELECTOR switch	OFF
3	AM-3349	HV RESET switch	OPERATE
		PRIM PWR switch	OFF
		Antenna system	INSPECT
		Heat exchanger	INSPECT

Radio Set AN/GRC-106

Starting Procedures

STEP	UNIT	CONTROL AND SWITCH	POSITION OR ACTION
1	Vehicle	IGNITION switch throttle	START Adjust until BATTERY indicator indicates in green area
2	Receiver/ Trans-mitter RT-662/ GRC or RT-834/ GRC	SERVICE SELECTOR switch	OVEN ON Allow 10 minutes for warm-up
3	RT-662/ GRC, RT-834/GRC	NOISE BLANKER switch	OFF
		VOX switch	PUSH-TO-TALK
		SQUELCH control	OFF
4	RT-834/ GRC	BFO control	MID-RANGE
		MANUAL RF GAIN control	FULLY CLOCKWISE
		AUDIO GAIN control	MID-RANGE
		FREQUENCY VERNIER control	OFF

STEP	UNIT	CONTROL AND SWITCH	POSITION OR ACTION
5	Amplifier AM-3349/ GRC	HV RESET switch	OPERATE
		PRIM PWR switch	OFF
		TEST METER switch	PRIM VOLT

Radio Set AN/GRC-106

Tuning Procedures

STEP	UNIT	ACTION
1	RT-662/GRC or RT-834/GRC	SERVICE SELECTOR switch to STANDBY.
2	AM-3349/GRC	PRIM PWR switch to ON, allow 90 seconds for warm-up of AM-3349/GRC. NOTE: Observe that the amplifier blowers are energized and that the SIGNAL LEVEL meter indicates in the extreme right portion of the scale.
3	RT-662/GRC or RT-834/GRC	Turn SERVICE SELECTOR switch to SSB-NSK (or any operator mode FSK, AM, or CW). SIGNAL LEVEL METER indicator will return to extreme left portion of meter scale.
4	AM-3349/ GRC-106	Observe that the TEST METER pointer indicates within the area of the two dark green wedges (top scale) when the SERVICE SELECTOR switch is in the SSB-NSK, FSK, AM, or CW positions.

STEP	UNIT	ACTION
5	RT-662/GRC or RT-834/GRC	Operate MHz and kHz controls to tuning frequency. The frequency digits are displayed in the windows directly above the controls.
6	AM-3349/ GRC-106	Determine the start settings for ANT TUNE and ANT LOAD counter from the antenna tuning and loading chart according to the selected operating frequency and type of antenna being used.
7	AM-3349/ GRC-106	Adjust the ANTENNA TUNE control until the antenna counter indicates the setting determined in step 6.
8	AM-3349/ GRC-106	Adjust the ANTENNA LOAD control until the antenna counter indicates the setting determined in step 6.

CAUTION 1:

The HV RESET switch should not stay in TUNE position for more than 2 minutes. If more than 2 minutes are required, move the HV RESET switch to operate and the SERVICE SELECTOR switch to STANDBY for 5 minutes cooling and then proceed with tuning procedures.

CAUTION 2:

ANT TUNE and ANT LOAD control will interact with each other. To center their respective meter pointers, rotate them slowly in the direction opposite to that of the indicated error.

STEP	UNIT	ACTION
9	AM-3349/ GRC-106	Set HV RESET switch to TUNE. Wait for a deflection on the ANT TUNE and ANT LOAD meters.
10	AM-3349/ GRC-106	Adjust ANT LOAD control for a center scale reading on the ANT LOAD meter. a. Rotate control in the direction the meter pointer is to move. Adjust the ANT TUNE control for a center scale reading on the ANT TUNE meter. b. Rotate control in the direction the meter pointer is to move, keeping the ANT LOAD meter as close to center scale as possible. c. Tuning of the amplifier is complete when simultaneous center scale readings are obtained on the ANT TUNE and ANT LOAD meters.
11	AM-3349/ GRC-106	Set TEST METER switch to LOW VOLT. TEST METER pointer indicates within green portion area of top scale.
12	AM-3349/ GRC-106	Set TEST METER switch to HIGH VOLT. TEST METER pointer indicates within green portion area of top scale.
13	AM-3349/ GRC-106	Set TEST METER switch to DRIVER CUR. TEST METER pointer indicates within the two dark green wedges of top scale.
14	AM-3349/ GRC-106	Set TEST METER switch to GRID DRIVE. TEST METER pointer indicates just below (to the left of) the gray portion of the bottom scale.

STEP	UNIT	ACTION
15	AM-3349/ GRC-106	Set TEST METER switch to PA CUR. TEST METER pointer indicates just below (to the left of) the gray portion of the bottom scale.
16	AM-3349/ GRC-106	Turn TEST METER switch to POWER OUT. TEST METER pointer indicates just below (to the left of) the gray area of scale.
17	AM-3349/ GRC-106	Turn HV RESET switch to OPERATE

NOTE: ANT TUNE and ANT LOAD counter settings should be logged in the logging chart aft step 17 is complete.

Radio Set AN/GRC-106

Stopping Procedures

STEP	UNIT	CONTROL AND SWITCH	POSITION OR ACTION
		NOTE: To prevent compromise of frequency setting, zero RT-662/884/GRC kHz and MHz controls when radio will be left unattended and unsecured.	
1	Receiver/ Transmitter	SERVICE SELECTOR switch	STANDBY (wait 2 minutes)
2	Amplifier	PRIM PWR switch	OFF
3	Receiver/ Transmitter	SERVICE SELECTOR switch	OFF

STEP	UNIT	CONTROL AND SWITCH	POSITION OR ACTION
4	Vehicle	Vehicle throttle	PUSH IN
		Vehicle IGNITION switch	OFF

Section II. Radio Teletypewriter Set AN/VSC-2

Installation Procedures

STEP	ACTION
1	Drive ground rod into ground.
2	Fasten ground strap to top of ground rod and to binding post on mast base bracket.
3	Saturate ground around the ground rod with water.
4	Assemble three each MS-116, one each MS-117, one each MS-118, antenna tip, and cover for use with the 15-foot whip antenna.
5	Ensure vehicle battery cover and battery caps are removed.

Radio Teletypewriter Set AN/VSC-2

Prestart Procedures

STEP	UNIT	CONTROL AND SWITCH	POSITION OR ACTION
1	Power Distribution Box	Main circuit breaker	OFF
		Blower-inverter circuit breaker	OFF
2	Modem MD-522	RCV-SEND switch	RCV
		MODE SELECTOR switch	OFF
3	MD-522A	PRIM PWR switch	OFF

STEP	UNIT	CONTROL AND SWITCH	POSITION OR ACTION
4	RT-662 or RT-834	SERVICE SELECTOR switch	OFF
5	AM-3349	TUNE-OPERATE switch	OPERATE
		PRIM PWR switch	OFF
		Antenna system	INSPECT
		Heat exchanger	INSPECT
6	a. Teletypewriter TT-4C/TG	MOTOR switch	OFF
		LINE INCREASE control	FULLY COUNTER-CLOCKWISE
	b. AN/UGC-74	IGNITION PWR switch	OFF
7	Vehicle	IGNITION switch	OFF

Radio Teletypewriter Set AN/VSC-2

Starting Procedures

STEP	UNIT	CONTROL AND SWITCH	POSITION OR ACTION
1	Vehicle	Engine throttle	START Adjust until BATTERY indicator indicates in green area

STEP	UNIT	CONTROL AND SWITCH	POSITION OR ACTION
2	Power Distribution Box	Main circuit breaker	ON
		Input DC voltmeter	Check for 28 volt DC reading
3	Receiver/ Transmitter RT-662/GRC or RT-834/ GRC	SERVICE SELECTOR switch	OVEN ON Allow 10 minutes for warm-up
4	RT-662/GRC	NOISE BLANKER switch	OFF
5	RT-662/GRC or RT-834/ GRC	VOX switch	PUSH-TO-TALK
		SQUELCH control	OFF
		BFO control	MID-RANGE
		MANUAL RF GAIN control	FULLY CLOCKWISE
		AUDIO GAIN control	MID-RANGE
		FREQUENCY VERNIER control	OFF
6	Amplifier AM-3349/ GRC	HV RESET switch	OPERATE
		PRIM PWR switch	ON
		TEST METER switch	PRIM VOLT
		NOTE 1: If your radio set is equipped with a Modem MD-522/GRC, perform step 7.	
		NOTE 2: If the modem you are using is an MD-522A/ GRC, perform step 8.	

STEP	UNIT	CONTROL AND SWITCH	POSITION OR ACTION
7	MD-522/ GRC	RCV-SEND switch	RCV
		MODE SELECTOR switch	VOICE
		AUDIO GAIN control	MID-RANGE
		BFO control	MID-RANGE
		SCOPE INTENSITY control	FULLY COUNTER-CLOCKWISE
		METER FUNCTION switch	Regulated DC
		RECEIVE-REVERSE-NORMAL switch	NORMAL
		ONE-WAY-DUPLEX switch	ONE-WAY
		NOTE: If you are using Modem MD-522/GRC, go to step 9.	
8	MD-522A/ GRC	RCV-SEND switch	RCV
		PRIM PWR switch	ON
		AUDIO GAIN control	MID-RANGE
		ONE-WAY-DUPLEX switch	ONE-WAY
		BFO control	MID-RANGE
		MODE SELECTOR switch	VOICE
		METER FUNCTION switch	Regulated DC

STEP	UNIT	CONTROL AND SWITCH	POSITION OR ACTION
		AUTO MARK HOLD control	ON
		DC LOOP 1 control	60 MA
		DC LOOP 2 control	60 MA
		SCOPE INTENSITY control	FULLY COUNTER-CLOCKWISE
9	Control Box	LOCAL REMOTE switch	LOCAL
		LINE CURRENT control	FULLY CLOCKWISE
		TTY VOICE switch	VOICE
10	Loud-speaker	FIELD or PACK SET USE/ VEHICULAR SET USE switch	VEHICULAR-SET USE

Radio Teletypewriter Set AN/VSC-2 Tuning Procedures

STEP	UNIT	ACTION
1	RT-662/GRC or RT-834/ GRC	Set SERVICE SELECTOR switch to STANDBY.
2	AM-3349/ GRC-106	PRIM PWR switch to ON allow 90 seconds for warm-up of AM-3349/GRC. NOTE: Observe that the amplifier blowers are energized and that the SIGNAL LEVEL meter indicates in the extreme right portion of the scale.

STEP	UNIT	ACTION
3	RT-662/GRC or RT-834/GRC	Turn SERVICE SELECTOR switch to SSB-NSK (or any operator mode FSK, AM or CW). SIGNAL LEVEL meter returns to extreme left portion of meter scale.
4	AM-3349/GRC-106	Observe that the TEST METER pointer indicates within the area of the two dark green wedges (top scale) when the SERVICE SELECTOR switch is in the SSB-NSK, FSK, AM or CW positions.
5	RT-662/GRC or RT-834/GRC	Operate MHz and kHz controls to tuning frequency. The frequency digits are displayed in the windows directly above the controls.
6	AM-3349/GRC-106	Determine the start settings for ANT TUNE and ANT LOAD counter from the antenna tuning and loading chart according to the selected operating frequency and type of antenna being used.
7	AM-3349/GRC-106	Adjust the ANTENNA TUNE control until the antenna counter indicates the setting determined in step 6.
8	AM-3349/GRC-106	Adjust the ANTENNA LOAD control until the antenna counter indicates the setting determined in step 6.
		CAUTION 1
		The HV RESET switch does not stay in TUNE position for more than 2 minutes. If more than 2 minutes are required, move the HV RESET to OPERATE and SERVICE SELECTOR to STANDBY for 5 minutes cooling and proceed with tuning procedures.

STEP	UNIT	ACTION
		CAUTION 2
		ANT TUNE and ANT LOAD control will interact with each other. To center their respective meter pointers, rotate them slowly in the direction opposite to that of the indicated error.
9	AM-3349/ GRC-106	Set HV RESET switch to TUNE. Wait for a deflection on the ANT TUNE and ANT LOAD meters.
10	AM-3349/ GRC-106	Adjust ANT LOAD control for a center scale reading on the ANT LOAD meter.
		a. Rotate control in the direction the meter pointer is to move. Adjust the ANT TUNE control for a center scale reading on the ANT TUNE meter.
		b. Rotate control in the direction the meter pointer is to move, keeping the ANT LOAD meter as close to center scale as possible.
		c. Tuning of the amplifier is complete when simultaneous center scale readings are obtained on the ANT TUNE and ANT LOAD meters.
11	AM-3349/ GRC-106	Set TEST METER switch to LOW VOLT. TEST METER pointer indicates within green portion area of top scale.
12	AM-3349/ GRC-106	Set TEST METER switch to HIGH VOLT. TEST METER pointer indicates within green portion area of top scale.
13	AM-3349/ GRC-106	Set TEST METER switch to DRIVER CUR. TEST METER pointer indicates within the two dark green wedges of top scale.

STEP	UNIT	ACTION
14	AM-3349/ GRC-106	Set TEST METER switch to GRID DRIVE. TEST METER pointer indicates just below (to the left of) the gray portion of the bottom scale.
15	AM-3349/ GRC-106	Set TEST METER switch to PA CUR. TEST METER pointer indicates just below (to the left of) the gray portion of the bottom scale.
16	AM-3349/ GRC-106	Set TEST METER switch to POWER OUT. TEST METER pointer indicates just below (to the left of) the gray area of scale.
17	AM-3349/ GRC-106	Turn HV RESET switch to OPERATE.
		NOTE: ANT TUNE and ANT LOAD counter settings should be logged in the loading chart after step 17 has been completed.
18	AN/UGC-74	For RATT sets with AN/UGC-74 installed, see the appropriate operating procedures section.

Radio Teletypewriter Set AN/VSC-2

Stopping Procedures

STEP	UNIT	CONTROL AND SWITCH	POSITION OR ACTION
1	Teletype-writer Set	MOTOR switch/PWR switch	OFF
2	Modem MD-522 or MD-522A	RCV-SEND switch	RCV

STEP	UNIT	CONTROL AND SWITCH	POSITION OR ACTION
3	Power Distribution Box	Blower-inverter circuit breaker	OFF
4	Modem MD-522	MODE SELECTOR switch	PWR OFF
	Modem MD-522A	PRIM PWR switch	OFF
5	Transmitter	SERVICE SELECTOR switch	STANDBY (wait 2 minutes)
6	Amplifier	PRIM PWR switch	OFF
7	Receiver/ Transmitter	SERVICE SELECTOR switch	OFF
8	Power Distribution Box	Main circuit	OFF
9	1/4 Ton Vehicle	Vehicle throttle	PUSH IN
		VEHICLE IGNITION switch	OFF

Radio Teletypewriter Set AN/VSC-2

Simplified Installation Procedures Using TSEC/KW-7

Simplified installation procedures are outlined below for Radio Teletypewriter Set AN/VSC-2 in a remote configuration when the set is equipped with AN/UGC-74 communications terminal and TSEC/KW-7 electronic security encryption device. This procedure assumes that a spare AN/UGC-74,

data cable, and TSEC/KW-7 are not available. If monitoring the radio teletypewriter set is desired, these items must be furnished separately. If these items are furnished separately and monitoring is desired, skip step 1 below.

STEP 1. Remove from the RATT set and transport to the remote site the—

- AN/UGC-74.
- Data cables.
- TSEC/KW-7.
- Remote control box.
- C-433/GRC remote control unit (P/O AN/GRA-6).
- H-33/PT handset.

STEP 2. Required additional items:

- AC power cable for AN/UGC-74.
- TTY transmit/receive cable (connects KW-7 to remote control box).

STEP 3. At the local site (RATT set)–

- Install batteries in Local Control C-434/GRC (P/O AN/GRA-6) and then connect Cable Assembly W-1 or W-2 to the AUDIO connector on the AN/VSC-2 control box.
- Connect WD-1/TT field wire (pair #l) to the line terminals on the C-434/GRC.
- Connect handset to the AUDIO connector of the C-434/GRC.

- Connect WD-1/TT field wire (pair #2) to the remote TTY terminals on the left side of the AN/VSC-2 control box.
- Install a dummy plug on the DUMMY connector located on the left of the AN/VSC-2 control box.

STEP 4. At the remote site–

- Install batteries in the Remote Control Unit C-433/GRC and then connect WD-1/TT field wire (pair #1) to the line terminals.
- Connect the AUDIO cable on the remote control box to the AUDIO connector of the C-433/GRC.
- Connect handset to the AUDIO connector of the remote control box.
- Connect WD-1/TT field wire (pair #2) to the TTY binding post of the remote control box. This is the send/receive line (OWR).
- Connect data cable from the AN/UGC-74 to the LOOP IN and LOOP OUT connectors on the rear of the TSEC/KW-7. Dummy plugs must be connected to the unused LOOP IN and LOOP OUT connectors to prevent an open circuit.
- Connect AC PWR cable to the AN/UGC-74. This cable is not supplied with the AN/VSC-2.
- Connect battery backup cable and battery, if available. (See note 5 on installation diagram in Figure l-l.)

- Install equipment grounds on AN/UGC-74 and TSEC/KW-7. Good equipment grounds are essential for operation and safety.

CAUTION

Do not attempt to operate equipment without grounds.

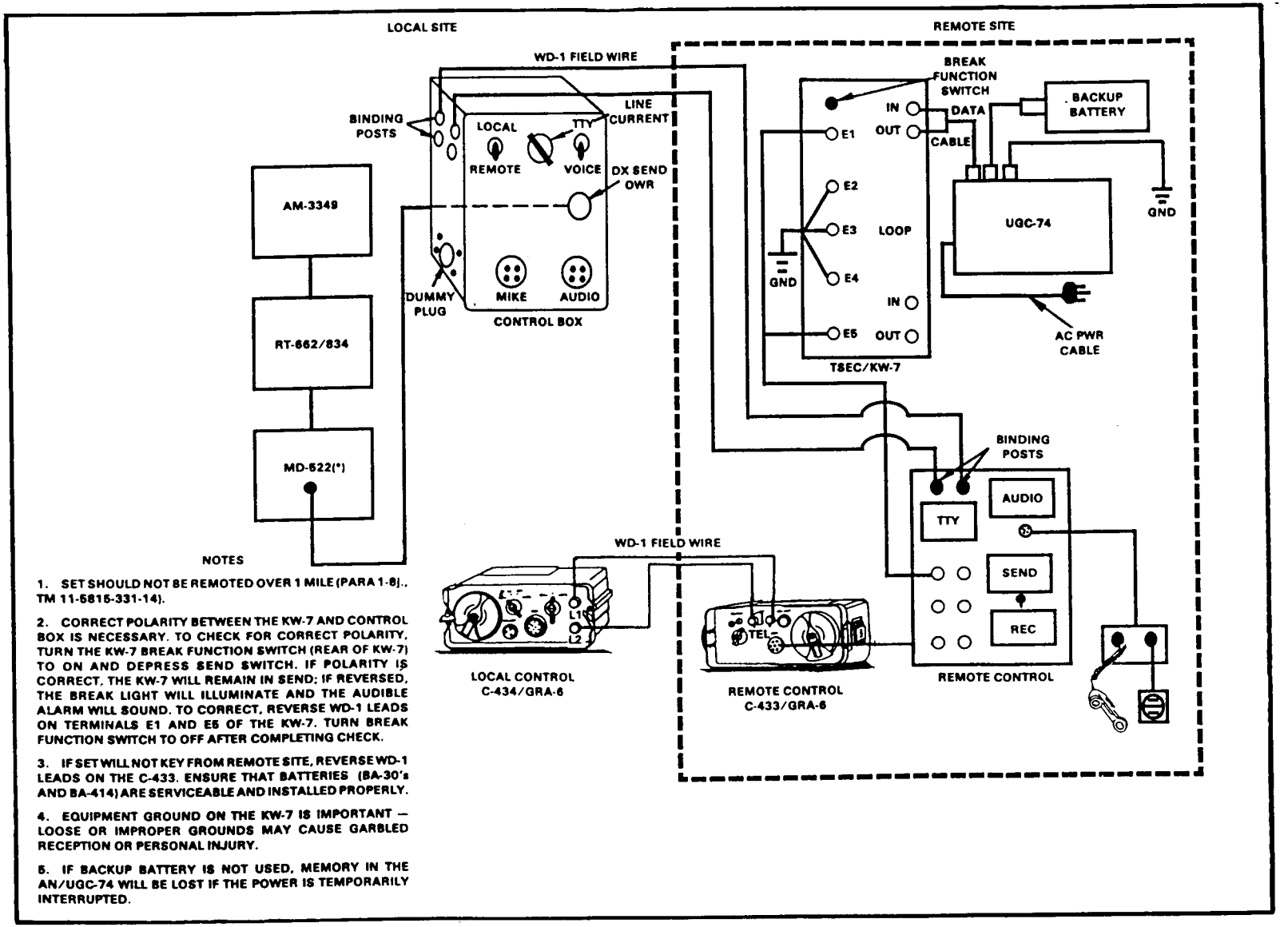

NOTES

1. SET SHOULD NOT BE REMOTED OVER 1 MILE (PARA 1-8j., TM 11-5815-331-14).

2. CORRECT POLARITY BETWEEN THE KW-7 AND CONTROL BOX IS NECESSARY. TO CHECK FOR CORRECT POLARITY, TURN THE KW-7 BREAK FUNCTION SWITCH (REAR OF KW-7) TO ON AND DEPRESS SEND SWITCH. IF POLARITY IS CORRECT, THE KW-7 WILL REMAIN IN SEND; IF REVERSED, THE BREAK LIGHT WILL ILLUMINATE AND THE AUDIBLE ALARM WILL SOUND. TO CORRECT, REVERSE WD-1 LEADS ON TERMINALS E1 AND E5 OF THE KW-7. TURN BREAK FUNCTION SWITCH TO OFF AFTER COMPLETING CHECK.

3. IF SET WILL NOT KEY FROM REMOTE SITE, REVERSE WD-1 LEADS ON THE C-433. ENSURE THAT BATTERIES (BA-30's AND BA-414) ARE SERVICEABLE AND INSTALLED PROPERLY.

4. EQUIPMENT GROUND ON THE KW-7 IS IMPORTANT — LOOSE OR IMPROPER GROUNDS MAY CAUSE GARBLED RECEPTION OR PERSONAL INJURY.

5. IF BACKUP BATTERY IS NOT USED, MEMORY IN THE AN/UGC-74 WILL BE LOST IF THE POWER IS TEMPORARILY INTERRUPTED.

Figure 1-1. Simplified remote diagram for Radio Teletypewriter Set AN/VSC-2 using AN/UGC-74 and TSEC/KW-7.

Radio Teletypewriter Set AN/VSC-2

Simplified Installation Procedural Using TSEC/KG-84A

a. Simplified installation procedures are outlined below for Radio Teletypewriter Set AN/VSC-2 in a remote configuration when the set is equipped with AN/UGC-74 communications terminal and TSEC/KG-84A dedicated loop encryption device (DLED). This procedure assumes that a spare AN/UGC-74, data cable, and TSEC/KG-84A are not available. If monitoring at the radio teletypewriter set is desired, these items must be furnished separately. If these items are furnished separately and monitoring is desired, skip step 1 below.

b. A high level transmit/receive cable for use at the remote site to connect the J-4024/U and the remote control box is required as an additional item. This cable is a two-conductor, shielded cable, with a telephone plug (type PJ-055) on one end and three banana plugs on the opposite end. (See TM 11-5815-616-13, paragraph 2-7, for instructions for fabrication of a transmit/receive cable if no other cable is available.)

STEP 1. Remove from the RATT set and transport to the remote location the—

- AN/UGC-74.
- Data cables.
- TSEC/KG-84A (DLED).
- J-4024/U interconnecting box.
- Remote control box.
- AN/GRA-6 control group less the C-434/GRC local control unit.
- LS-166/U loudspeaker.
- Cable, high level transmit/receive.

STEP 2. At the local site (RATT set)–

- Install batteries in Local Control C-434/GRC (P/O AN/GRA-6) and connect Cable Assembly W-1 or W-2 to the AUDIO connector on the AN/VSC-2 control box.
- Connect WD-1/TT field wire (pair #1) to the line terminals on the C-434/GRC.
- Connect handset to the AUDIO connector of the C-434/GRC.

c. Connect WD-1/TT field wire (pair #2) to the remote TYY terminals located on the left side of the AN/VSC-2 control box.

- Install a dummy plug on the DUMMY connector located on the left side of the AN/VSC-2 control box. If no dummy plug is available, use a short piece of solid conductor wire as a jumper between pins A and C.
- Place the LOCAL REMOTE switch on the control box to the REMOTE position.

DANGER

To prevent the possibility of electrical shock, do this after the OWR line has been connected et the remote site.

STEP 3. At the remote site—

- Install batteries in the Remote Control Unit C-433/GRC and then connect WD-1/TT field wire (pair #1) to the line terminals. This is the audio/keying line.
- Connect the audio cable on the remote control box to the AUDIO connector of the C-433/GRC.

- Connect J-654/G interconnecting box to the AUDIO connector of the remote control box. Connect the handset and speaker to the J-654/G.
- Connect WD-1/TT field wire (pair #2) to the TTY binding post of the remote control box. This is the send-receive line (OWR).
- Connect the transmit/receive cable banana plugs to J-4024/U terminals L1 (send) and L3 (receive). Connect a jumper wire between terminals L2 and L4. Connect the banana plug that is attached to the shield wire to the ground terminal.
- Connect the transmit/receive cable telephone plug to the remote control box terminal J1.
- Connect DLED power cable (CX-13315/U) from TSEC/KG-84A (J1) to J-4024/U (J4).
- Connect DLED black cable (CX-13317/U) from TSEC/KG-84A (J2) to J-4024/U (Jl).
- Connect DLED red cable (CX-13316/U) from TSEC/KG-84A (J3) to J-4024/U (J2).
- Connect data cable (SC-D-960024) from the AN/UGC-74 to the J5 and J7 (TTY 1) connectors on the J-4024/U.
- Connect AC power cable to AN/UGC-74. (This cable is not supplied with the AN/VSC-2. Requisition power cable assembly, 5995-00-271-9444, from TM 11-5815-602-10.)
- Connect battery backup cable and battery, if available. (See note 5 on the installation diagram in Figure 1-2.)
- Install quipment grounds on AN/UGC-74, J-4024/U, and TSEC/KG-84A. Good equipment grounds are essential for operation and safety.

- Operational procedures are the same for the AN/VSC-2.

CAUTION

Do not attempt to operate equipment without grounds.

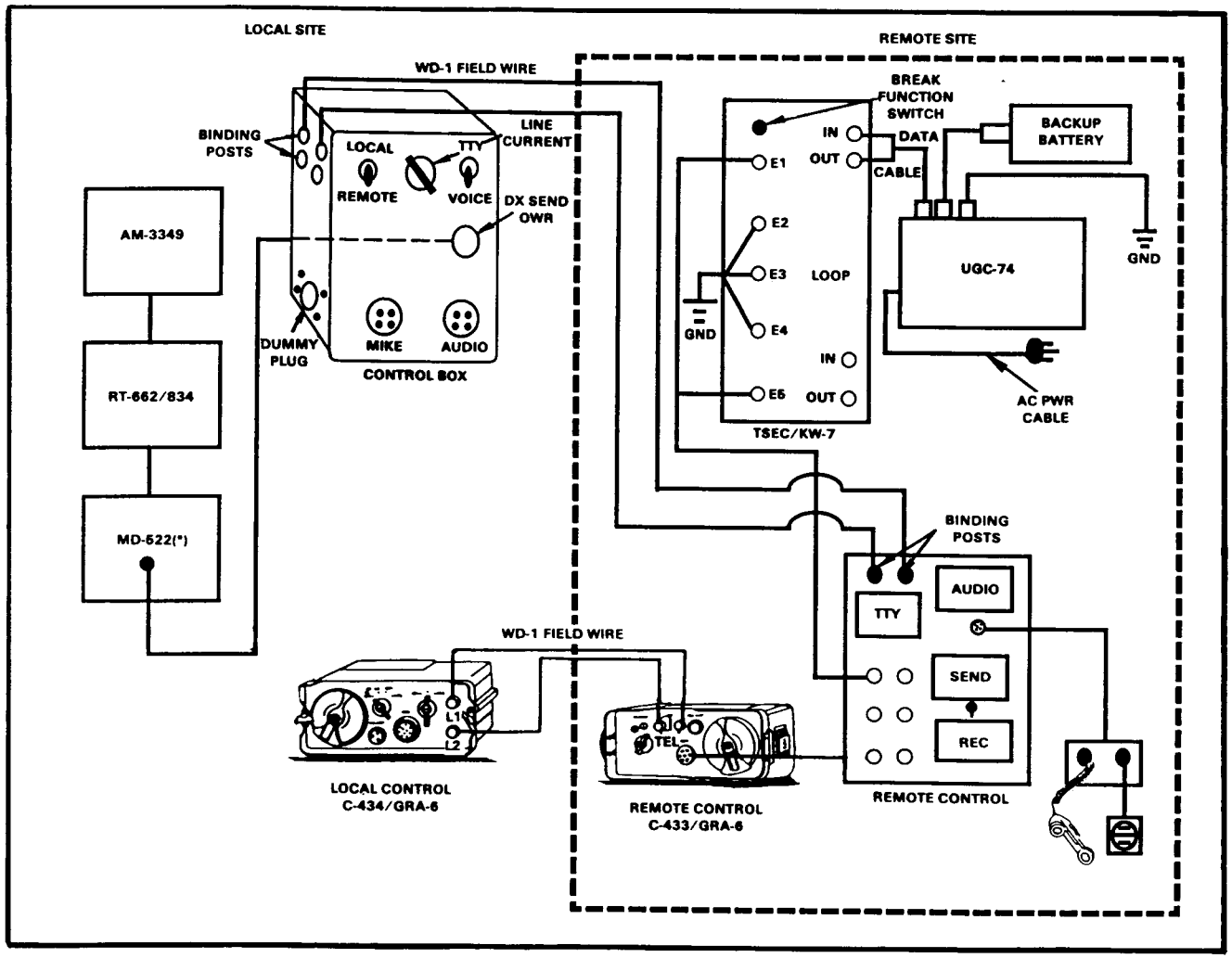

Figure 1-2. Simplified remote diagram for Radio Teletypewriter Set AN/VSC-2 using AN/UGC-74 and TSEC/KG-84A.

Section III. Radio Teletypewriter Set AN/VSC-3 Operating Instructions

The following procedures cover local AN/VSC-3 operation including the Intercommunications Set AN/VIC-l(V).

CAUTION 1

Before applying primary power to the AN/VSC-3, start the M577A1 engine or auxiliary power unit. Failure to do this may cause serious damage to the radio equipment.

CAUTION 2

When teletypewriter is not transmitting, the auxiliary REC-SEND switch, the MD-522 (*)/GRC SEND-REC switch, and the remote control REC-SEND switch must be set to REC to prevent transmitter from being continuously keyed.

Radio Teletypewriter Set AN/VSC-3 Prestart Operating Procedures

Before starting any of the equipment, perform the following procedures:

a. Control Box.

(1) Set main circuit breaker to OFF.

(2) Set inverter circuit breaker to OFF.

b. MX-7778/GRC. Set circuit breakera to OFF.

c. Radio Set AN/GRC-106(*). Set PRIM PWR switch on the AM-3349/GRC-106 to OFF. Set SERVICE SELECTOR switch on RT-662/GRC or RT-834/GRC to OFF.

d. Radio Teletypewriter Modem MD-522(*)/GRC. Set ON-OFF switch to OFF.

e. Teletypewriter Set TT-98(*)/FG.

(1) Set MOTOR switch to OFF.

(2) Set LIGHT switch to OFF.

(3) Adjust TT-98(*)/FG LINE CURRENT control fully clockwise (for minimum resistance).

(4) Set LINE SELECTOR switch to 20 MA position.

f. Teletypewriter, Reperforator-Transmitter TT-76(*)/GGC.

(1) Set PWR switch to OFF.

(2) Set MOTOR switch to OFF.

(3) Set LIGHT switch to OFF.

(4) Check the current in the bias circuit by following the instructions in TM 11-5815-238-10.

(5) Open the TT-76(*)/GGC cover and perform the following procedures if TTY security equipment is to be installed. If not, skip (5), (6), and (7).

- Ensure a 5600-ohm resistor is connected to the power supply and terminal unit BIAS TEST MA terminals, in place of the shorting strap.
- Ensure the SIGNAL/BIAS switch on the power supply and terminal unit is in the 60 MA position (60 MA is the correct position when using the 5600-ohm resistor in (a) even though the system is set for 20 MA).
- Ensure the plug from the selector magnet cable is in the socket marked 20 MA.

(6) Close the set cover.

(7) Ensure that Device, Low Level Signaling TT-523(*)/GGC is correctly installed on the set behind the transmitter-distributor. Ensure the plugs are connected

and the bracket is secured under the binding post on the side of the set cover.

Radio Teletypewriter Set AN/VSC-3

Starting Procedures

Start the M577A1 engine or auxiliary power and perform the procedures below.

a. On the control box, perform the following:

- Set the main circuit breakers to ON, and observe that the 27.5 VDC indicator lights and the DC voltmeter indicates 27.5 VDC.
- Set the inverter breaker to ON, and observe that the inverter is operating.
- Set the VOICE-CW/TTY switch to TTY.
- If the AN\VSC-3 is to be operated in a NONSECURE mode, set the BLACK-RED switch to BLACK. If the AN/VSC-3 is to be operated in a SECURE mode, set the BLACK-RED switch to RED.
- Set the LOCAL-REMOTE switch to LOCAL.

b. On the MD-522(*)/GRC, open the control cover to expose additional controls and complete the following:

- Set the ONE-WAY-DUPLEX switch to ONE WAY.
- Set the RECEIVE switch to NORM.
- Set the METER FUNCTION switch to DC LOOP 1.
- Set the DC LOOP 1 switch to 20 MA.
- Set the SCOPE INTENSITY control FULLY COUNTERCLOCKWISE.
- Set the BFO control to ita midscale position.

- Set the AUDIO GAIN control FULLY COUNTERCLOCKWISE.
- Set the MODE SELECTOR switch to VOICE.
- Set the RCV-SEND switch to RCV.
- Set the AUTO MARK HOLD switch to ON.
- Set the SQUELCH SENS control to the FULLY CLOCKWISE position.
- Set the ON-OFF switch to ON.

c. Set the MX-7778/GRC circuit breakers to ON.

d. Set the auxiliary RCV-SEND switch (on the shelf) to RCV.

e. On the TT-98(*)/FG, set the MOTOR switch to ON, LIGHT switch to ON, and SEND-LOCK switch to SEND.

f. On the TT-76(*)/GGC, set the POWER ON/OFF switch to ON, MOTOR ON/OFF switch to ON, LIGHT ON/OFF switch to ON, KEYBOARD SEND/LOCK switch to SEND, and SELECTOR switch to POSITION 1.

g. Send a line of RYs on the TT-98(*)/FG keyboard, and ensure the TT-98(*)/FG and the TT-76(*)/GGC are printing and perforating tape in response.

h. Send a line of RYs on the TT-76(*)/GGC keyboard. Ensure the TT-76(*)/GGC is printing and perforating tape, and the TT-98(*)/FG is printing in response.

i. Insert a prepunched tape into the TT-76(*)/GGC transmitter-distributor. Set the transmitter-distributor, and set the transmitter-distributor START-STOP lever to START. Ensure the TT-76(*)/GGC is printing and perforating tape, and the TT-98(*)/FG is printing in response. Set the transmitter-distributor START-STOP lever to STOP.

j. Set the TT-76(*)/GGC SELECTOR switch to position 2. Set the transmitter-distributor START-STOP switch to START.

Ensure the TT-76(*)/GGC is not printing and perforating, and the TT-98(*)/FG is receiving the tape message. Ensure the TT-76(*)/GGC keyboard can be used to punch and print local off-line tape.

k. When using the AN/UGC-74A(V)3, follow the procedures listed below.

NOTE: Before operating the AN/UGC-74A(V)3, the following self test must be made.

(1) Remove the front cover. Ensure the ON/OFF switch is in the OFF position.

(2) If a loop back plug (SM-B-91600) is available, disconnect the clock and data cable from the J1 connector on the rear panel of the AN/UGC-74A(V)3. Replace the cable with the loop back plug. If the plug is not available, do not disconnect the clock and data cable from the J1 connector. Place a jumper (using banana jacks) from the B to the C connectors on the Dummy box. This creates a loop back circuit to the AN/UGC-74A(V)3.

(3) Release the combination case latches, and extend the terminal out on its slides until the stop locks engage. (Use caution while doing this because the cables must go through the case.) The internal controls and switches are exposed.

(a) Set the internal controls on the interface assembly as follows.

- PARITY switch to ODD.
- STATE switch to ICT.
- REC MOD switch to LO DATA.
- XMIT MOD switch to LO DATA.
- BAUD RATE switch to 75.

- CLOCK INT/EXT switch to INT.
- CLOCK +/- switch to +.
- FIGURE S/J switch to S.
- SIGNAL NRZ/DIO switch to NRZ.
- STOP BITS switch to 1.
- MODE switch to ASCII.
- SELF-TEST switch to ON.

(b) Press the stop locks, and return the terminal to the combination case. Secure the case latches.

(4) Turn the AN/UGC-74A(V)3 PWR switch to ON. COPY lamps are on, and all other lamps are off. The terminal will print the following operational state message:

- SYSTEM INITIALIZED
- SWITCH STATE = ICT
- OPERATIONAL STATE = ICT
- OPERATION CAPACITY = FULL
- MODE = ASCII
- STOP BITS = 1
- BAUD RATE = 75
- END OF LINE OPTION = OD OD OA
- SPACE OPTION = OFF
- LINE LENGTH = 80
- LINE FEEDS = 1
- RECEIVE ENVELOPE
  OPTION = 56 5A435A 43: 4E 4E 4E 4E

- TRANSMIT ENVELOPE
  OPTION = 56 5A 43 5A 43:4E 4E 4E 4E
  7F 7F 7F 7F 7F 7F 7F 7F 7F
  7F 7F 7F
- PARITY OPTION = ODD
- CAPITOL LETTER OPTION = ON

(5) If at any time a test fails, the system will printout a FAIL message and cite the assembly being tested at the time of the failure. When a test fails during self test, all testing stops. Notify organizational maintenance.

(6) Perform lamp test by pressing and holding PARITY RESET switch. All indicator lamps will remain lit as long as the PARITY RESET switch is pressed.

(7) Perform keyboard test by pressing every key on the keyboard. Ensure the keys do not stick or bind, and the terminal responds properly for every key depression.

Radio Set AN/GRC-106(*)

Starting and Tuning Procedures

NOTE 1: The AM-3349/GRC-106 HV RESET switch must be in OPERATE position when the AN/GRC-(*) is turned OFF or ON.

NOTE 2: References to RT-662/GRC apply to RT-834/GRC.

a. Initial preparation for operation.

(1) Ensure the whip antenna is in the operating position, properly connected, and free of obstructions.

(2) Make sure there are no obstructions blocking the AM-3349/GRC-106 air inlet and outlet vents.

(3) Connect the desired audio accessory (handset, microphone, or telegraph key) to the control AUDIO connector.

(4) Turn the RT-662/GRC SERVICE SELECTOR switch to OVEN ON. (Allow a minimum of 10 minutes warm-up time to stabilize equipment.)

(5) Set the RT-662/GRC VOX switch to PUSH-TO-TALK.

(6) Set the RT-662/GRC SQUELCH control to OFF.

(7) Set the NOISE BLANKER switch to OFF. (Used on older RT-662/GRC only.)

(8) Set the RT-662/GRC BFO control to MID-RANGE.

(9) Set the RT-662/GRC MANUAL RF GAIN control FULLY CLOCKWISE.

(10) Set the RT-662/GRC AUDIO GAIN control to MID-RANGE.

(11) Set the RT-662/GRC FREQUENCY VERNIER switch to OFF.

(12) Set the AM-3349/GRC-106 HV RESET switch to OPERATE.

b. AN/GRC-106(*) starting procedure.

(1) Set the RT-662/GRC SERVICE SELECTOR switch to STANDBY and the AM-3349/GRC-106 PRIM PWR switch to ON, and allow 90 seconds for warm-up of the AM-3349/GRC-106. Observe that the AM-3349/GRC-106 blowers are energized, and that the SIGNAL LEVEL METER indicator on the RT-662/GRC will return to the extreme right portion of the meter scale. (If above indications are abnormal, refer to Table 2-2, item 1, TM 11-5820-520-20.)

(2) Set the RT-662/GRC SERVICE SELECTOR switch to SSB-NSK (or any operate mode FSK, AM or CW). SIGNAL LEVEL meter will return to extreme left portion of meter scale.

(3) Set the AM-3349/GRC-106 TEST METER switch to PRIM VOLT. Observe that the TEST METER pointer indicates within the area of the two dark green wedges (top scale) when the SERVICE SELECTOR switch is in the SSB-NSK, FSK, AM, or CW positions. (If above indication is abnormal, refer to Table 2-2, item 2, TM 11-5820-520-20.)

c. Final tuning procedures for AN/GRC-106(*).

(1) Set the RT-662/GRC MHz and kHz controls to assigned operating frequency. The frequency digits are displayed in the windows directly above the controls.

(2) Note the AM-3349/GRC-106 ANT TUNE and ANT LOAD predetermined setting on the antenna tuning and loading chart or the logging chart.

(3) Adjust the AM-3349/GRC-106 ANT TUNE control to match the numbers on the chart used.

(4) Adjust the AM-3349/GRC-106 ANT LOAD control to match the numbers on the chart used.

CAUTION

The HV RESET switch should not stay in TUNE position for more than 2 **minutes. If more than 2 minutes are required, move the AM-3349/GRC-106 HV RESET switch to OPERATE and the RT-662/GRC SERVICE SELECTOR switch to STANDBY for 5 minutes cooling. After 5 minutes cooling, set the SERVICE SELECTOR switch to the previous position and the HV RESET switch to TUNE, and proceed with the tuning procedure. ANT TUNE and ANT LOAD controls will interact with each other. To center their respective meter pointers, rotate them slowly in the direction opposite that of the indicated error. Be sure the antenna is attached for proper loading to prevent damage to the equipment while performing (5) through (12).**

(5) Set the AM-3349/GRC-106 HV RESET switch to TUNE. Wait for a deflection on the ANT TUNE and ANT LOAD meters.

(6) Adjust the AM-3349/GRC-106 ANT LOAD control for a center scale reading on the ANT LOAD meter.

(a) Rotate control in the direction the meter pointer is to move. Adjust the ANT TUNE control for a center scale reading on the ANT TUNE meter.

(b) Rotate control in the direction that the meter pointer is to move, keeping the ANT LOAD meter as close to center scale as possible.

(c) Tuning of the AM-3349/GRC-106 is complete when simultaneous center scale readings are obtained on the ANT TUNE and ANT LOAD meters. (If indication is abnormal, refer to Table 2-2, item 5, TM 11-5820-520-20.) Place the HV RESET switch of the AM-3349/GRC-106 to the OPERATE position. Place the TEST METER FUNCTION switch of the AM-3349/GRC-106 to the PRIM VOLT position. Place the HV RESET switch on the AM-3349/GRC-106 to the TUNE position and observe that the TEST METER pointer indicates within the two dark green wedges (top scale) of the test meter.

(7) Set the AM-3349/GRC-106 TEST METER switch to LOW VOLT. TEST METER pointer indicates within green portion of top scale. (For abnormal indication, refer to Table 2-2, item 3, TM 11-5820-520-20.)

(8) Set the AM-3349/GRC-106 TEST METER switch to HIGH VOLT. TEST METER pointer indicates within green portion of top scale. (For abnormal indication, refer to Table 2-2, item 4, TM 11-5820-520-20.)

(9) Set the AM-3349/GRC-106 TEST METER switch to DRIVE CUR. TEST METER pointer indicates within the two dark green wedges of top scale. (For abnormal indication, refer to Table 2-2, item 6, TM 11-5820-520-20.)

(10) Set the AM-3349/GRC-106 TEST METER switch to GRID DRIVE. TEST METER pointer indicates just below (to

the left of) gray portion of the bottom scale. (For abnormal indication, refer to Table 2-2, item 6, TM 11-5820-520-20.)

(11) Set the AM-3349/GRC-106 TEST METER switch to PA CUR. TEST METER pointer indicates just below (to the left of) the gray portion of the bottom scale. (For abnormal indication, refer to Table 2-2, item 6, TM 11-5820-520-20.)

(12) Set the AM-3349/GRC-106 TEST METER switch to POWER OUT. TEST METER pointer indicates just below (to the left of) gray portion of scale. (For abnormal indication, refer to Table 2-2, item 6, TM 11-5820-520-20.)

CAUTION

The HV RESET switch should not stay in TUNE position for more than 2 minutes.

(13) Turn the AM-3349/GRC-106 HV RESET switch to OPERATE.

NOTE: ANT TUNE and ANT LOAD counter settings should be logged in the logging chart with a pencil after (13) above has been completed. These settings may be used for future tuning references unless ANT TUNE and ANT LOAD meter pointers indicate in the red (left or right of center scale) portion of the scale during operation. If the settings cannot be used, repeat tuning procedures(1) through (13).

Intercommunications Set AN/VIC-1(V)

Starting Procedures

Turn on and prepare the AN/VIC-1(V) for intercommunication and AN/GRC-106(*) operation as follows:

- Set the AM-1780/VRC POWER CRT BKR ON/OFF switch to ON, and observe that the POWER indicator lights.
- Set the AM-1780/VRC MAIN PWR switch to INT ONLY.
- Set the AM-1780/VRC INT ACCENT ON/OFF switch to ON.

Set the AM-1780/VRC RADIO TRANSMISSION switch to CDR + CREW.

Set the AM-1780/VRC INSTALLATION SWITCH to OTHER.

Operate each crew box (C-2298/VRC) on interphone to check AN/VIC-1(V) system.

Intercommunications Set AN/VIC-1(V)

Local Operation

a. Radio Teletypewriter Reception.

NOTE: MD-522(*)/GRC is provided with an automatic MARK HOLD. With the AUTO MARK HOLD switch in the ON position, the teletypewriter will not open during the period of no signals or when signals are too weak for interchangeability.

(1) On the RT-662/GRC, set the SERVICE SELECTOR switch to SSB/NSK or FSK as required. Set the MANUAL RF GAIN control fully clockwise and the AUDIO GAIN control at midposition.

(2) Set the MD-522(*)/GRC MODE SELECTOR switch to 850 Hz, 85 Hz, or 85 Hz DIV, as required.

(3) Set the MD-522(*)/GRC AUDIO GAIN control for a comfortable level of audio on the incoming tones from the distant station.

(4) Adjust MD-522(*)/GRC BFO control (on 850 Hz only) for two clean ellipses on the cathode ray tube when a signal having proper speed and shift is being received.

(5) When signal is received, set TT-98(*)/FG MOTOR ON/OFF switch to ON and/or set the TT-76(*)/GGC SELECTOR switch to position 1, as desired, to receive message on the respective teletypewriter. Adjust MD-522(*)/GRC BFO control (on 850 Hz only) slightly to eliminate errors in received copy.

b. Radio Teletypewriter Transmission.

(1) Set the RCV-SEND switch on MD-522(*)/GRC to SEND. Set the auxiliary RCV-SEND switch (on the shelf) to SEND.

(2) Operate the TT-76(*)/GGC or TT-98(*)/FG to send message.

(3) Immediately after sending message, set the auxiliary RCV-SEND switch back to RCV.

c. Voice or CW Communications.

(1) On the RT-662/GRC, set the SERVICE SELECTOR switch to SSB/NSK or CW as required. Set MANUAL RF GAIN and AUDIO GAIN controls as cited in a (l).

(2) Set the MD-522(*)GRC MODE SELECTOR to VOICE.

(3) Set the MD-522(*)GRC AUDIO GAIN control for a comfortable level of audio on the incoming voice or CW signal.

(4) Set the VOICE-CW/TTY switch on the AN/VSC-3 control box to VOICE-CW. Turn the control box INVERTER switch to OFF.

(5) Observe that the control box NONSECURE VOICE indicator lamp is on.

(6) Operate the controls at the appropriate operator position.

(7) When the AN/GRC-106(*) is to be operated in the CW mode, disconnect cable W21 from the control box AUDIO connector and connect Telegraph Key KY-116/U to the connector.

(8) When the AN/GRC-106(*) is to be operated in the VOICE mode without the AN/VIC-1(V), connect Headset H-33/PT or Microphone M-29/U to the control box AUDIO connector.

Intercommunications Set AN/VIC-1(V)

Stopping Procedures

a. Set PWR switches on the AN/VIC-1(V), MD-522(*)/GRC, TT-76(*)/GGC, and TT-98(*)/FG to OFF.

b. Set the RT-662/GRC or RT-834/GRC SERVICE SELECTOR switch to STANDBY. Allow 2 minutes for the AN/GRC-106(*) to cool. Keep the HV RESET switch on the AM-3349/GRC-106 at OPERATE position when AN/GRC-106(*) is turned OFF or ON. After 2 minutes cooling, set the AM-3349/GRC-106 PRIM PWR switch and the RT-662/GRC or RT-834/GRC SERVICE SELECTOR switch to OFF.

c. Set the inverter and main circuit breakers on the AN/VSC-3 control box to OFF.

d. Perform the stopping procedures to shut down.

NOTE: For troubleshooting the VSC-3, see troubleshooting charts on the AN/GRC-122/142. The only difference is the control box AM-1780.

Radio Teletypewriter Set AN/VSC-3(*)

Cabling Diagrams

Basic operation of the radio teletypewriter set is the same as for the Radio Teletypewriter Set AN/GRC-142. For detailed instructions on operation, refer to TM 11-5815-332-15. Figures 1-3 and 1-4 show a cabling diagram for the AN/VSC-3(*).

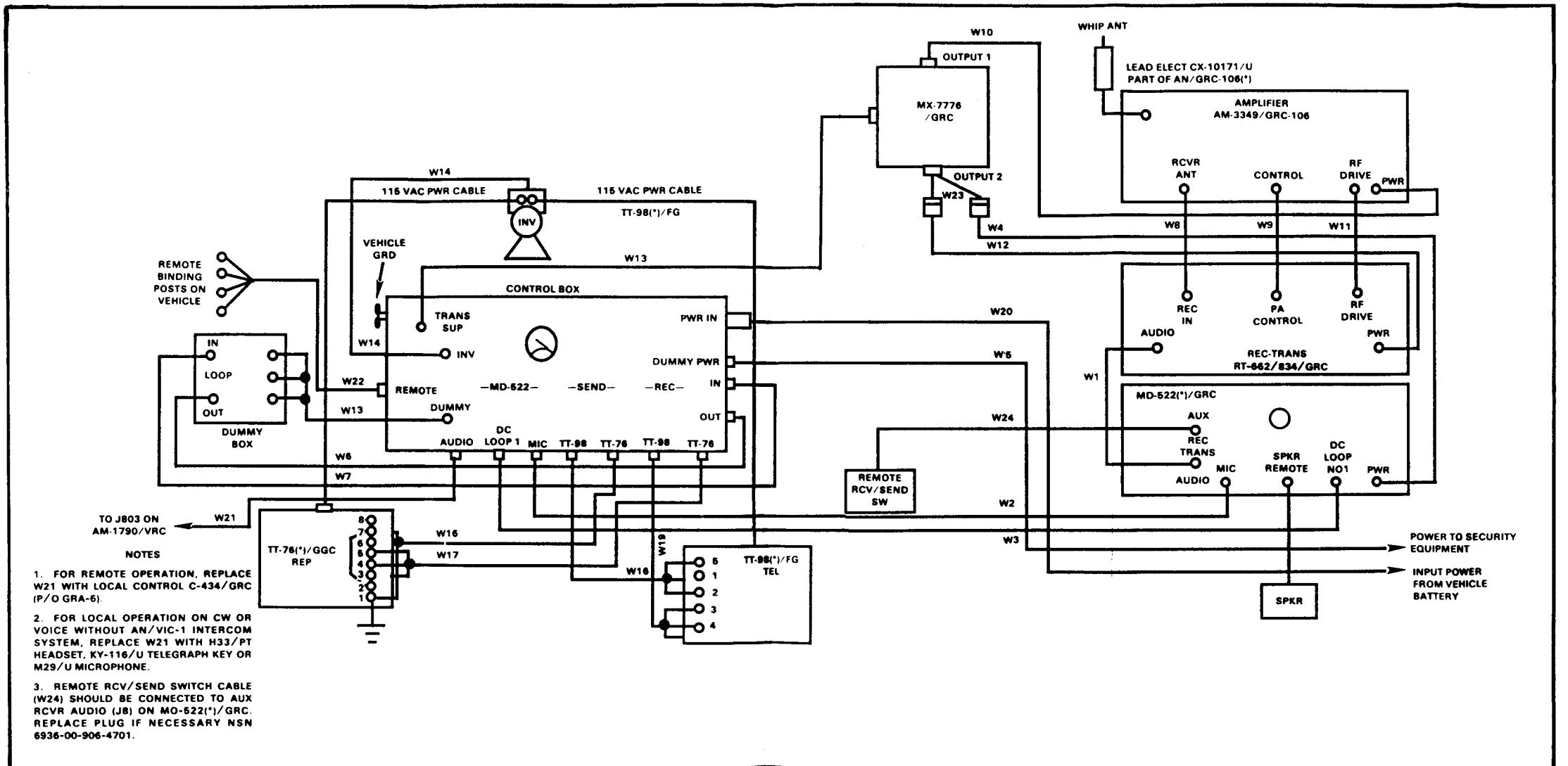

NOTES

1. FOR REMOTE OPERATION, REPLACE W21 WITH LOCAL CONTROL C-434/GRC (P/O GRA-6).

2. FOR LOCAL OPERATION ON CW OR VOICE WITHOUT AN/VIC-1 INTERCOM SYSTEM, REPLACE W21 WITH H33/PT HEADSET, KY-116/U TELEGRAPH KEY OR M29/U MICROPHONE.

3. REMOTE RCV/SEND SWITCH CABLE (W24) SHOULD BE CONNECTED TO AUX RCVR AUDIO (J8) ON MO-522(*)/GRC. REPLACE PLUG IF NECESSARY NSN 6936-00-906-4701.

Figure 1-3. Cabling diagram for AN/VSC-3.

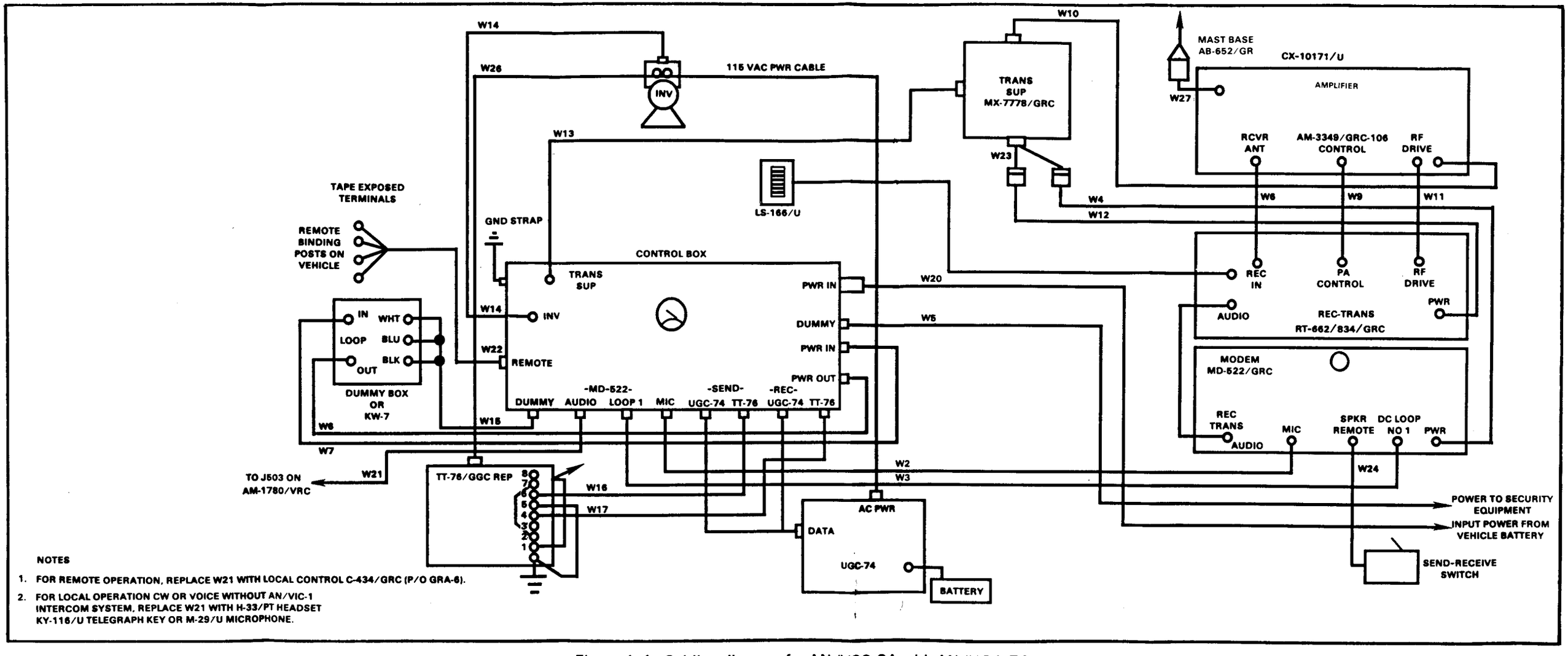

Figure 1-4. Cabling diagram for AN/VSC-3A with AN/UGC-74.

Section IV. Radio Teletypewriter Set AN/GRC-122/142

Installation Procedures

STEP	ACTION
1	Secure boarding ladder to vehicle.
2	Drive ground rod into ground.
3	Connect ground strap to ground rod and ground terminal on shelter.
4	Saturate ground around the ground rod with water.
5	Assemble three each MS-116, one each MS-117, one each MS-118, antenna tip, and cover for use with the 15-foot whip antenna.
6	Remove vehicle battery cover and battery caps if operating with DC.
7	Connect power cable securely to shelter if operating with AC.

Radio Teletypewriter Set AN/GRC-122/142

Major Power Switches

STEP	UNIT	CONTROL AND SWITCH	POSITION OR ACTION
1	AC Entrance Box	AC main circuit breaker	OFF
2	SB-3018 (PWR Dist Panel)	Blower and lights circuit breakers	OFF
		LOCK-OUT switch	OFF

STEP	UNIT	CONTROL AND SWITCH	POSITION OR ACTION
		RECP circuit breaker	OFF
		Inverter circuit breaker	OFF
		DC MAIN PUSH ON-PULL OFF switch	OFF
3	PP-4763 (AC PWR Supply)	AC ON-OFF switch	OFF
4	a. TT-98	MOTOR-LIGHT switch	OFF
	b. AN/UGC-74	PWR switch	OFF
5	MD-522	RCV-SEND switch	RCV
	MD-522	MODE SELECTOR switch	OFF
	MD-522A	PRIM PWR switch	OFF
	MD-522A	RCV-SEND switch	RCV
6	AM-3349	TUNE-OPERATE switch	OPERATE
		PRIM PWR switch	OFF
7	RT-662/834	SERVICE SELECTOR switch	OFF
8	TT-76	POWER-MOTOR-LIGHT switch	OFF
9	Shelter Heater	ON-OFF switch	OFF
10	Air Conditioner	W-2 switch	OFF
11	Secure Equipment	PWR switch	OFF

Prestart Procedures

STEP	UNIT	CONTROL AND SWITCH	POSITION OR ACTION
1	Shelter	Air inlet cover	OPEN
2	Truck	Exhaust pipe hose	INSTALLED
3	Power Sources	Circuit breakers	OFF
4	Air Conditioner	SW-2 switch	OFF
5	TA-312	Handset	SEATED IN CRADLE
6	AC Heater	PWR switch	OFF
7	LS-166	Vehicle-packset	VEHICULAR SET USE
8	C-434	REMOTE switch	TEL Only
9	SB-3018	MAIN PUSH ON-PULL OFF switch	PULL OFF
		LIGHT switch	OFF
		BLOWER switch	OFF
		LOCK-OUT switch	OFF
		28 Volt RECP	OFF
		Inverters OWR ON-OFF switch	OFF
		Inverters DX ON-OFF switch	OFF
10	MD-522	RCV-SEND switch	RCV

STEP	UNIT	CONTROL AND SWITCH	POSITION OR ACTION
		MODE SELECTOR switch	PWR-OFF
	MD-522A	PRIM PWR switch	OFF
		RCV-SEND switch	RCV
11	SA-1554	Loop ADJ OWR DX SEND control	MID-RANGE
		Loop ADJ DX REC PONY control	MID-RANGE
		LOCAL REMOTE switch	LOCAL
		LOCK-OUT OVERRIDE switch	LOCK-OUT
		AUDIO TEL REMOTE-CW switch (early models only)	AUDIO TEL
12	a. TT-98/FG	MOTOR switch	OFF
		LIGHT switch	OFF
		LINE-BREAK switch	LINE
		SEND-LOCK switch	SEND
	b. AN/UGC-74	PWR switch	OFF
13	PP-4763	ON-OFF switch	OFF
14	TT-523/GGC	TT-523 switch	TD SEND TR REC-SEND
15	TT-76A/GGC	MOTOR switch	OFF
		LIGHT switch	OFF
		PWR switch	OFF
		KEYBOARD switch	SEND
		SELECTOR switch	1

STEP	UNIT	CONTROL AND SWITCH	POSITION OR ACTION
		START-STOP-FEED RETRACT	FEED RETRACT
16	SA-1555	TT-98 switches or AN/UGC-74 switch	RED
		TT-76 switch	OWR-DX-SEND
17	RT-662 or RT-834/GRC	SERVICE-SELECTOR switch	OFF
18	AM-3349/GRC	TUNE-OPERATE switch	OPERATE
		PRIM PWR switch	OFF
		Antenna system	CONNECTIONS SECURE
19	ME-165/G	FUNCTION switch	POWER
20	Fuel Heater	CONTROL switch	OFF
21	Secure Equipment	PWR switch	OFF

Radio Teletypewriter Set AN/GRC-122/142

Starting Procedures

STEP	UNIT	CONTROL AND SWITCH	POSITION OR ACTION
		NOTE: If source of power is AC, perform steps 1 through 8. If source of power is DC, perform steps 9 through 12.	
1	AC Power Cable	AC POWER CABLE connector	CONNECTOR SECURE
2	AC Power Source	Circuit breakers	ON
3	J-2776	AC PWR-DC PWR switch	AC power
4	AC Entrance Box	Circuit breakers	ON
5	AC Meter	AC meter reads	115 volts
6	Air Conditioner	COOL AIR switch	AS NEEDED
		WARM AIR switch	AS NEEDED
7	PP-4763	ON-OFF switch	ON
8	SB-3018	MAIN PUSH ON-PULL OFF circuit breaker	PULL OFF
		LIGHT switch	ON
		(Optional: BLACKOUT switch pulled out one click when door is open.)	
		LOCK-OUT switch	ON

STEP	UNIT	CONTROL AND SWITCH	POSITION OR ACTION
		NOTE: If you are using AC power, go to step 13.	
9	DC Input Cable	DC POWER CABLE connector	CONNECTOR SECURE
10	Vehicle	Engine	STARTED
		Throttle	ADJUSTED
		Vehicle battery charging meter	GREEN AREA
11	J-2776	AC PWR-DC PWR switch	DC power
12	SB-3018	MAIN PUSH ON-PULL OFF circuit breaker	PUSH ON
		LIGHT switch	ON
		(Optional: BLACKOUT switch pulled out one click when door is open.)	
		VDC meter (Throttle of vehicle adjusted)	28 volts
		BLOWER switch	ON
		LOCK-OUT switch	ON
		28 Volt RECP switch	AS NEEDED
		OWR INVERTER switch	ON
		DX INVERTER switch	ON (only if working duplex)
13	RT-662 or RT-834	SERVICE SELECTOR switch (Allow a minimum of 10 minutes warm-up.)	OVEN ON

STEP	UNIT	CONTROL AND SWITCH	POSITION OR ACTION
		VOX switch	PUSH-TO-TALK
		SQUELCH switch	OFF
		NOISE BLANKER switch	OFF
		BFO control	MID-RANGE
		MANUAL RF GAIN control	CLOCKWISE
		AUDIO GAIN control	MID-RANGE
		FREQUENCY VERNIER control	OFF
14	AM-3349	TUNE-OPERATE switch	OPERATE
		PRIM PWR switch	ON
		TEST METER switch	PRIM VOLT
		NOTE: If the RATT set is equipped with Modem MD-522, perform step 15 only. If equipped with Modem MD-522A, perform step 16.	
15	MD-522	RCV-SEND switch	RCV
		MODE SELECTOR switch	VOICE
		AUDIO GAIN control	MID-RANGE
		BFO control	MID-RANGE
		SCOPE INTENSITY control	COUNTER-CLOCKWISE
		METER FUNCTION switch	REGULATED DC METER READS 20 VOLTS DC

STEP	UNIT	CONTROL AND SWITCH	POSITION OR ACTION
		RECEIVE-REVERSE-NORMAL switch	NORMAL
		ONE-WAY-DUPLEX switch	ONE-WAY
16	MD-522A	RCV-SEND switch	RCV
		PRIM PWR switch	ON
		AUDIO GAIN control	MID-RANGE
		ONE-WAY-DUPLEX switch	ONE-WAY
		BFO control	MID-RANGE
		MODE SELECTOR switch	VOICE
		METER FUNCTION switch	REGULATED DC METER READS 20 VOLTS DC
		AUTO MARK HOLD switch	ON
		RECEIVE-REVERSE-NORMAL switch	NORMAL
		SQUELCH SENS control	COUNTER-CLOCKWISE
		DC LOOP 1 control	20/60 MA
		DC LOOP 2 control	20/60 MA
		SCOPE INTENSITY control	COUNTER-CLOCKWISE

Radio Teletypewriter Set AN/GRC-122/142

Tuning Procedures

STEP	UNIT	CONTROL AND SWITCH	POSITION OR ACTION
1	RT-662/834	SERVICE SELECTOR switch	STANDBY (Allow 90 seconds for warm-up)
		SERVICE SELECTOR switch	SSB-NSK
		MHz and kHz controls	ASSIGNED FREQUENCY
2	AM-3349	NOTE: Primary power must be indicated on the test meter before putting the TUNE-OPERATE switch to TUNE.	
		TUNE-OPERATE switch.	TUNE
		After ANT TUNE and ANT LOAD meter needles deflect, adjust TUNE and LOAD controls in the direction you want the needle to move until meter needles indicate in the center of the green portions of their meters.	
		CAUTION If tuning and loading of the antenna requires more than 2 minutes, return HV RESET	

STEP	UNIT	CONTROL AND SWITCH	POSITION OR ACTION
		switch on amplifier to the OPERATE position and allow amplifier to cool for 5 minutes before attempting to tune antenna again.	
		When tuning is complete, set TEST METER switch to LOW VOLT and HIGH VOLT and observe that the TEST METER pointer is within the green portion of the scale (top scale). Set TEST METER switch to DRIVER CUR. Observe for a reading within the area of the two dark green wedges (top scales). Set TEST METER switch to GRID DRIVE. TEST METER pointer indicates just below (to the left of) gray portion of the bottom scale.	
		Turn TEST METER switch to POWER OUT. TEST METER pointer indicates just below (to the left of) gray portion of scale (bottom). Turn HV RESET switch to OPERATE. This completes the tuning procedure. The adjustment	

STEP	UNIT	CONTROL AND SWITCH	POSITION OR ACTION
		of the equipment for NSK operation follows.	
3	Modem MD-522(*)	METER FUNCTION switch	REC level
		Rotate audio gain on RT-662/834 clockwise until a reading is observed on the test meter of the MD-522.	
		NOTE: Audio gain on RT-662/834 should never be turned maximum or fully clockwise.	
		Turn MODE SELECTOR switch to 85 Hz (NSK). Turn FUNCTION switch to DC loop number 1.	
4	Secure Equipment	PWR switch	ON (Make necessary checks)
5	a. TT-98	PWR switch	ON
		LIGHT switch	ON
	b. AN/UGC-74	PWR switch	
6	Modem MD-522(*)	RCV-SEND switch	SEND (Observe a reading on test meter of AM-3349. If there is no

STEP	UNIT	CONTROL AND SWITCH	POSITION OR ACTION
			reading, switch to TUNE and OPERATE. A reading should now be observed.)
7	Secure Equipment	Phase button	Push IN for required time.
8	TT-98	Keyboard	Type on the TT-98 and observe for a fluctuation on the test meter of the MD-522.
9	AN/UGC-74	Keyboard	Type TTY command 1 CR. Type 20 character test 2 CR. Observe for a fluctua tion on MD-522/GRC test meter.
10	MD-522(*)	RCV-SEND switch	RCV

STEP	UNIT	CONTROL AND SWITCH	POSITION OR ACTION
11		METER FUNCTION switch	REC level (You are now tuned to send and receive NSK signals).

Radio Teletypewriter Set AN/GRC-122/142

Operating Communications Terminal AN/UGC-74 (in the ICT state)

STEP	CONTROL AND SWITCH	POSITION OR ACTION
1	Make sure PWR switch is in the OFF position.	
2	Pull the terminal from the case so that it is extended on its slides and locked in the extended position.	
3	Set the interior switches as follows:	
	• PARITY switch	ODD
	• STATE	ICT
	• REC mode	60/20
	• XMIT mode	60/20
	• BAUD rate	45.5
	• CLOCK INT/EXT/KG-30	INT
	• CLOCK +/-	+
	• Fig S/J	S
	• Sig NRZ/D10	NRZ
	• Stop bits	1
	• ASCII/BAUDOT mode	BAUDOT

STEP	CONTROL AND SWITCH	POSITION OR ACTION
4	Set front panel (external) switches as follows:	
	• TRANSFER switch	OFF
	• AUDIO control	FULLY CLOCKWISE
	• ILLUMINATE control	FULLY CLOCKWISE
	• PWR switch	ON
	NOTE: The terminal will automatically begin to print out the operation validation/state determination (initialization) message when the PWR switch is turned ON.	
5	a. Perform the self test by placing the SELF-TEST switch on the inside panel to the START position. The switch is spring loaded and will return to its OFF position when released.	
	b. Return the terminal to its case and secure the latches at this time.	
	c. There are five tests the terminal will go through. At the end of each test, the PARITY lamp on the front (external) panel will light when the terminal has self checked.	
	d. When the PARITY lamp lights, PRESS the PARITY RESET switch to begin the next test.	

STEP	CONTROL AND SWITCH	POSITION OR ACTION
	e. Test five will print out KEYBOARD TEST. The operator will type one carriage return and two line feeds The Quick Brown Fox. 1234567890	
	f. Press PARITY RESET switch.	
	g. This ends the self test. The terminal will print READY - then the operational state message. The terminal is now ready to receive data.	
6	Type Parameter Commands/ Subcommands as follows: • PAR CR • LINE 69 CR • REMI ON CR • TENV 2Ø 2Ø 2Ø 2Ø 2Ø ØD ØD ØA: 4E 4E 4E 4E CR • RENV 2Ø 2Ø 2Ø 2Ø 2Ø ØD ØD ØA: 4E 4E 4E 4E CR • EXIT CR • Q CR NOTE 1: System should verify all switch settings and parameters at this time. NOTE 2: Loop current setting on MD-522/GRC, KW-7, and AN/UGC-74 must be the same; all 20 MA or all 60 MA.	

STEP	CONTROL AND SWITCH	POSITION OR ACTION

NOTE 3: BAUD rates must correspond to speed of other TTY machines in net. Set BAUD rate as shown.

TTY WPM	BAUD RATE
60 WPM	45.5
66 WPM	50
100 WPM	75

Stopping Procedures

STEP	UNIT	CONTROL AND SWITCH	POSITION OR ACTION
1	RT-662/834	SERVICE SELECTOR switch	STANDBY (Two minutes required in this position for cooling off.)
2	AM-3349	PRIM PWR switch	OFF
3	TT-98	MOTOR-LIGHT switches	OFF
	AN/UGC-74	PWR switch	OFF
4	TT-76	MOTOR-LIGHT-POWER switches	OFF
5	Secure Equipment	PWR switch	OFF
6	MD-522/ MD-522A	MODE SELECTOR switch/ PRIM PWR switch	OFF OFF

STEP	UNIT	CONTROL AND SWITCH	POSITION OR ACTION
7	Shelter Heater	ON-OFF switch	OFF
8	RT-662/834	SERVICE SELECTOR switch	OFF
9	PP-4763 (AC power supply)	AC ON-OFF switch	OFF
10	SB-3018 (PWR Dist Panel)	Inverter circuit breakers	OFF
		RECP circuit breaker	OFF
		Blower and lights circuit breakers	OFF
		LOCK-OUT switch	OFF
11	AC Entrance Box	AC main circuit breaker	OFF
12	Power Supply (Generator)	Circuit breaker	OFF
		START-STOP switch	STOP

Radio Teletypewriter Set AN/GRC-122/142

Troubleshooting

a. Troubleshooting the AN/GRC-122 and the AN/GRC-142 is based on symptoms that appear during normal operation or during maintenance checks and services. The troubleshooting chart applies to all models of the AN/GRC-122 and AN/GRC-142 unless otherwise indicated. It assumes the vehicular generating system is in good working condition. The troubleshooting chart helps the operator localize the trouble to a particular unit, such as the AN/GRC-106 or the MD-522/GRC. If the corrective measures do not resolve the trouble, refer to a higher level of maintenance.

b. If AN/GRC-122/142(*) radio sets are being operated in the SECURE mode and the problem is believed to be in the security equipment, convert the shelter to the NONSECURE mode of operation. If the malfunction disappears when the shelter is converted to the NONSECURE mode, the problem may be in the security equipment.

c. When operating AN/GRC-122(*) radio sets in DUPLEX mode of operation, turn off duplex equipment to determine the shelter component related to the problem.

d. All troubleshooting procedures assume the equipment is preset properly and the radio set is tuned properly. Always check switch positions to ensure the failure is not caused by improper switch setting. Use signal cabling diagrams to locate cable connections between components believed to be malfunctioning and to aid in signal path and equipment interconnections. (See Figure 1-5.)

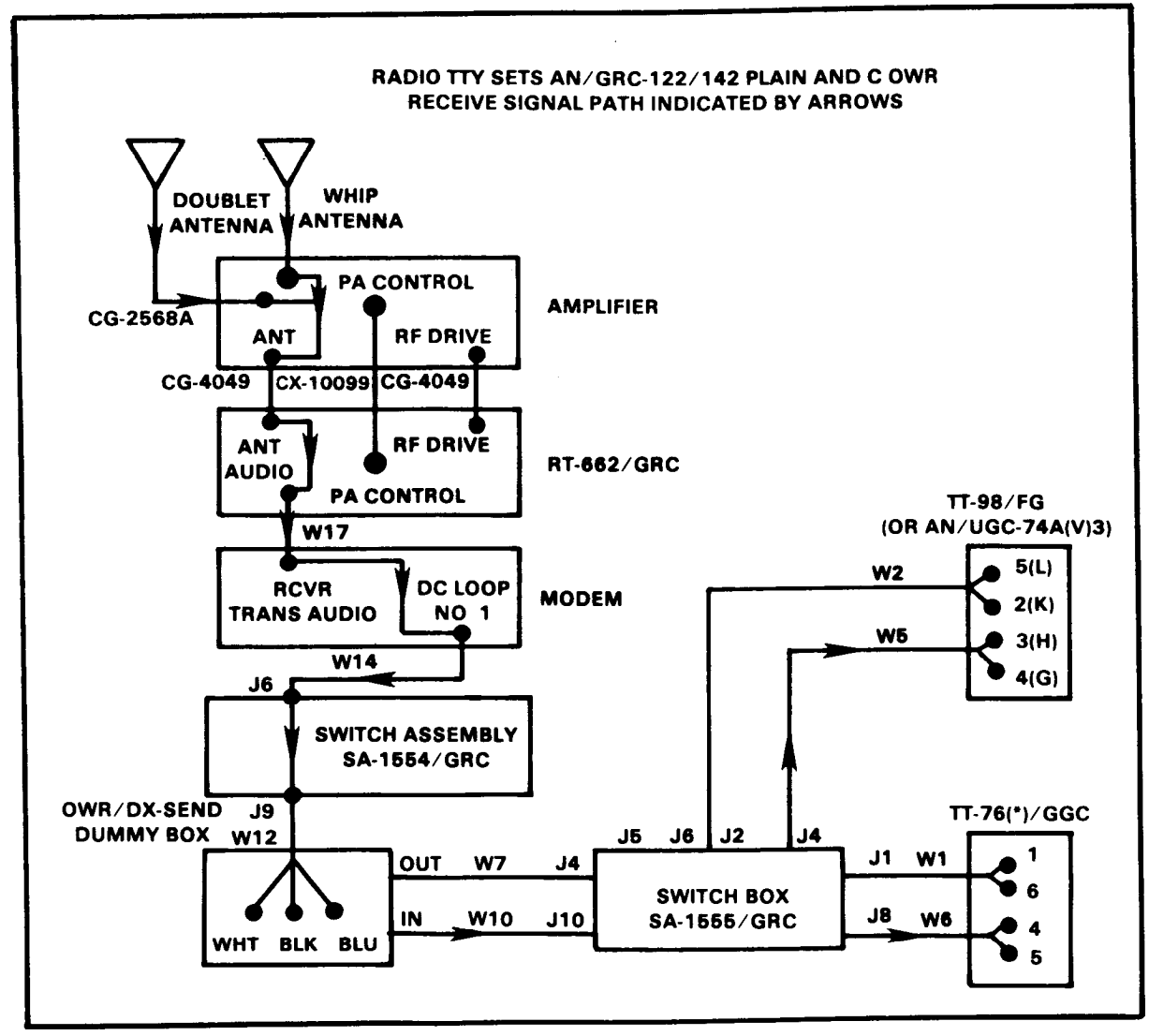

Figure 1-5. Signal cabling diagrams.

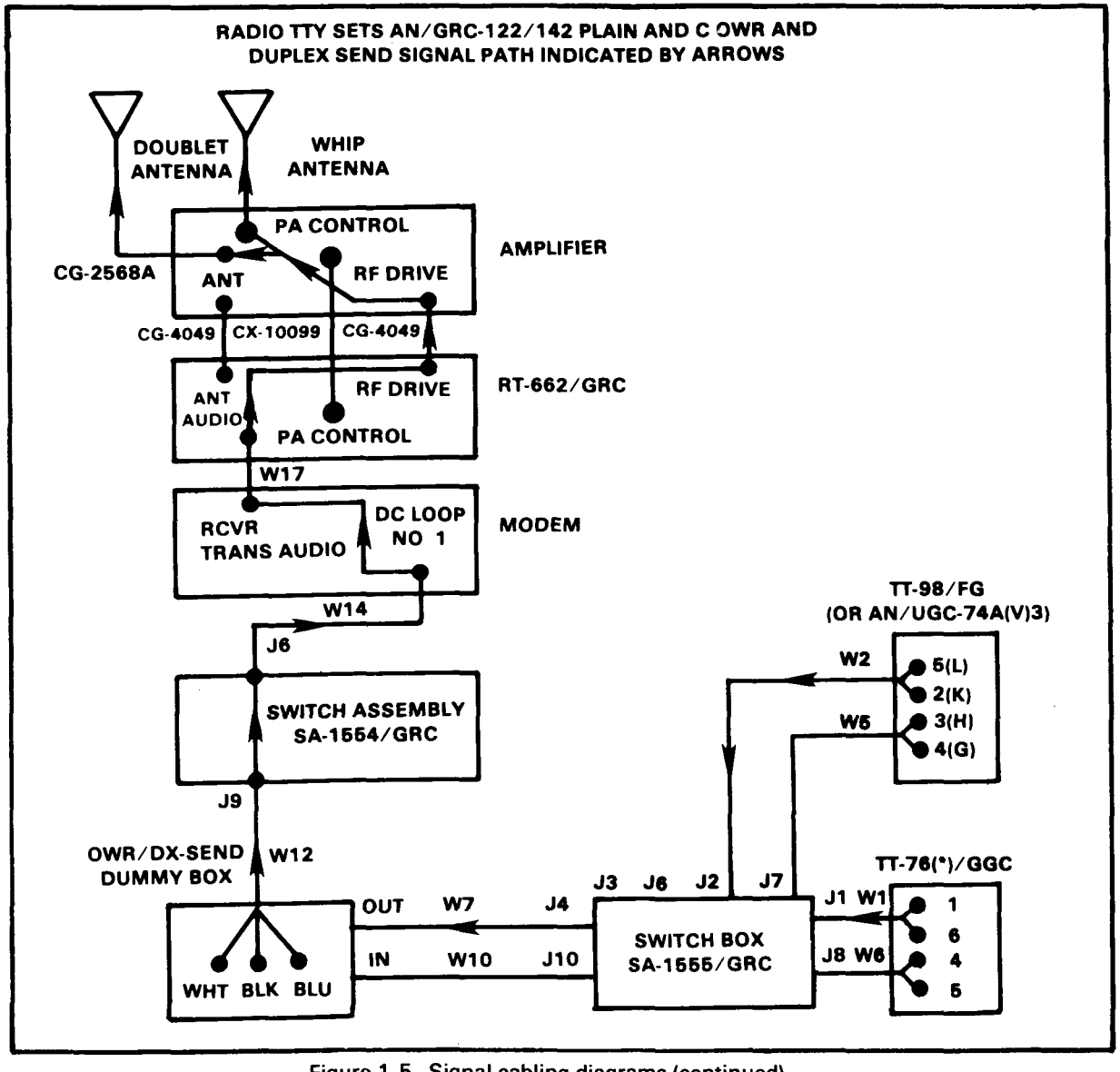

Figure 1-5. Signal cabling diagrams (continued).

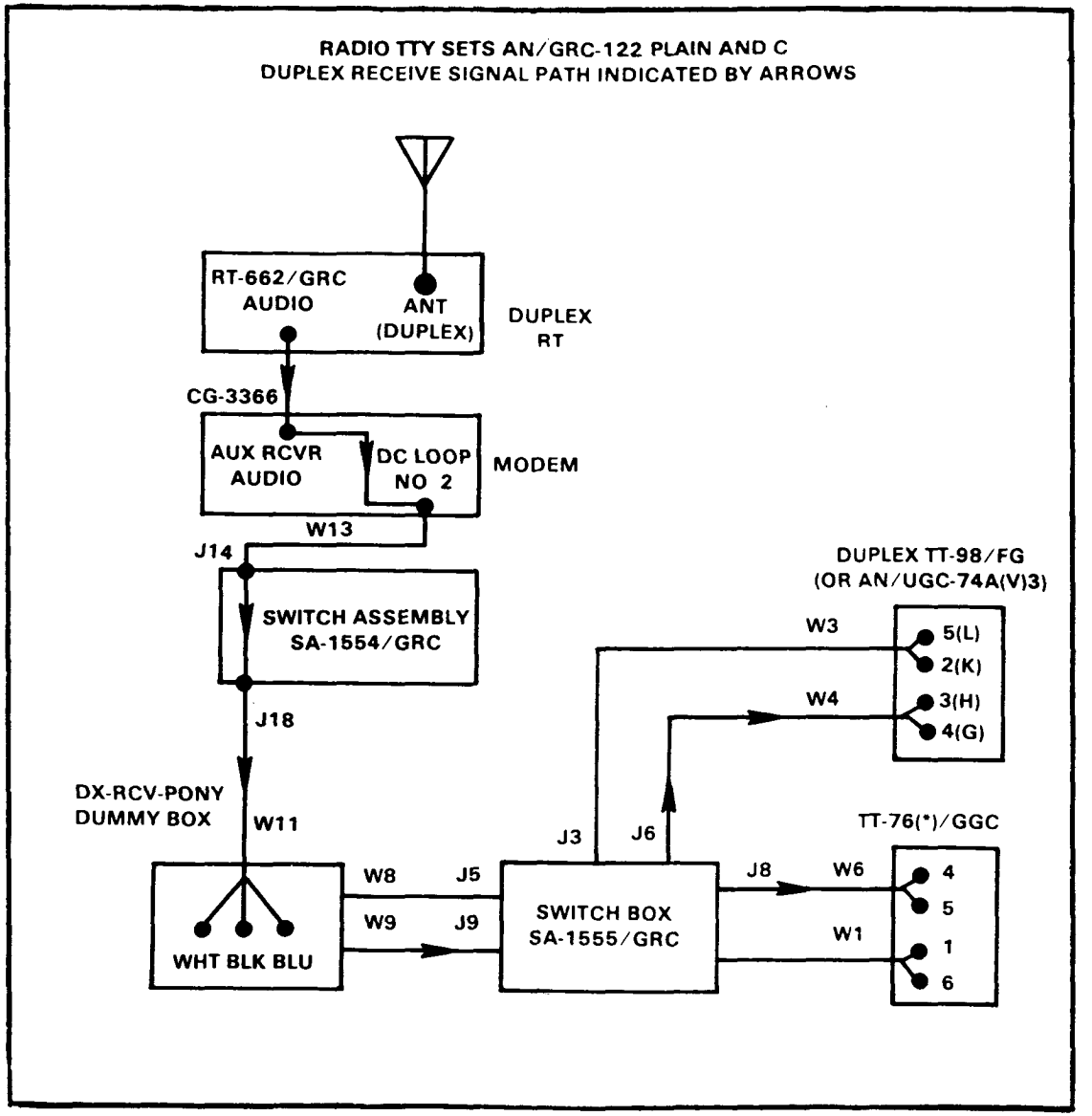

Figure 1-5. Signal cabling diagrams (continued).

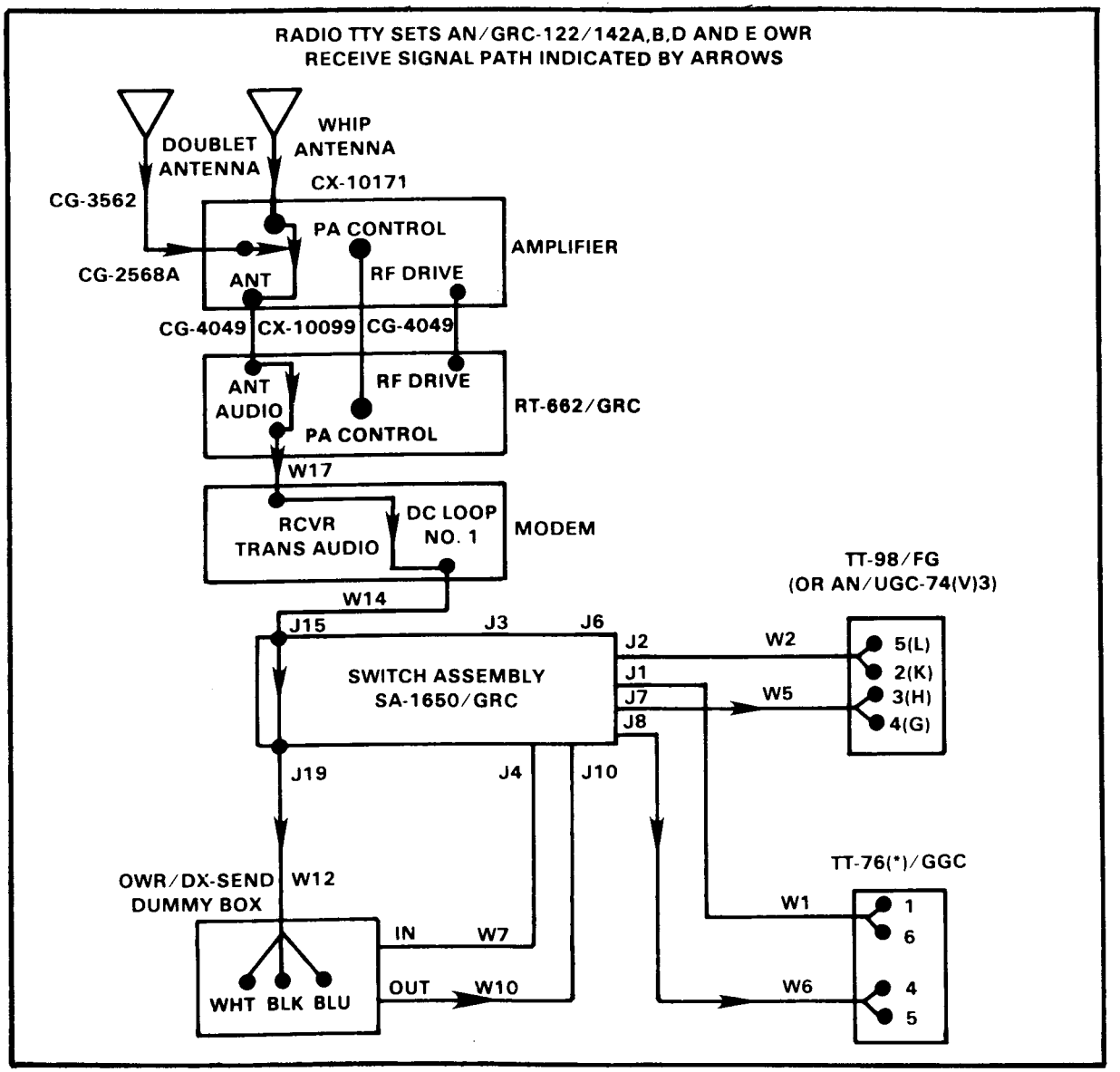

Figure 1-5. Signal cabling diagrams (continued).

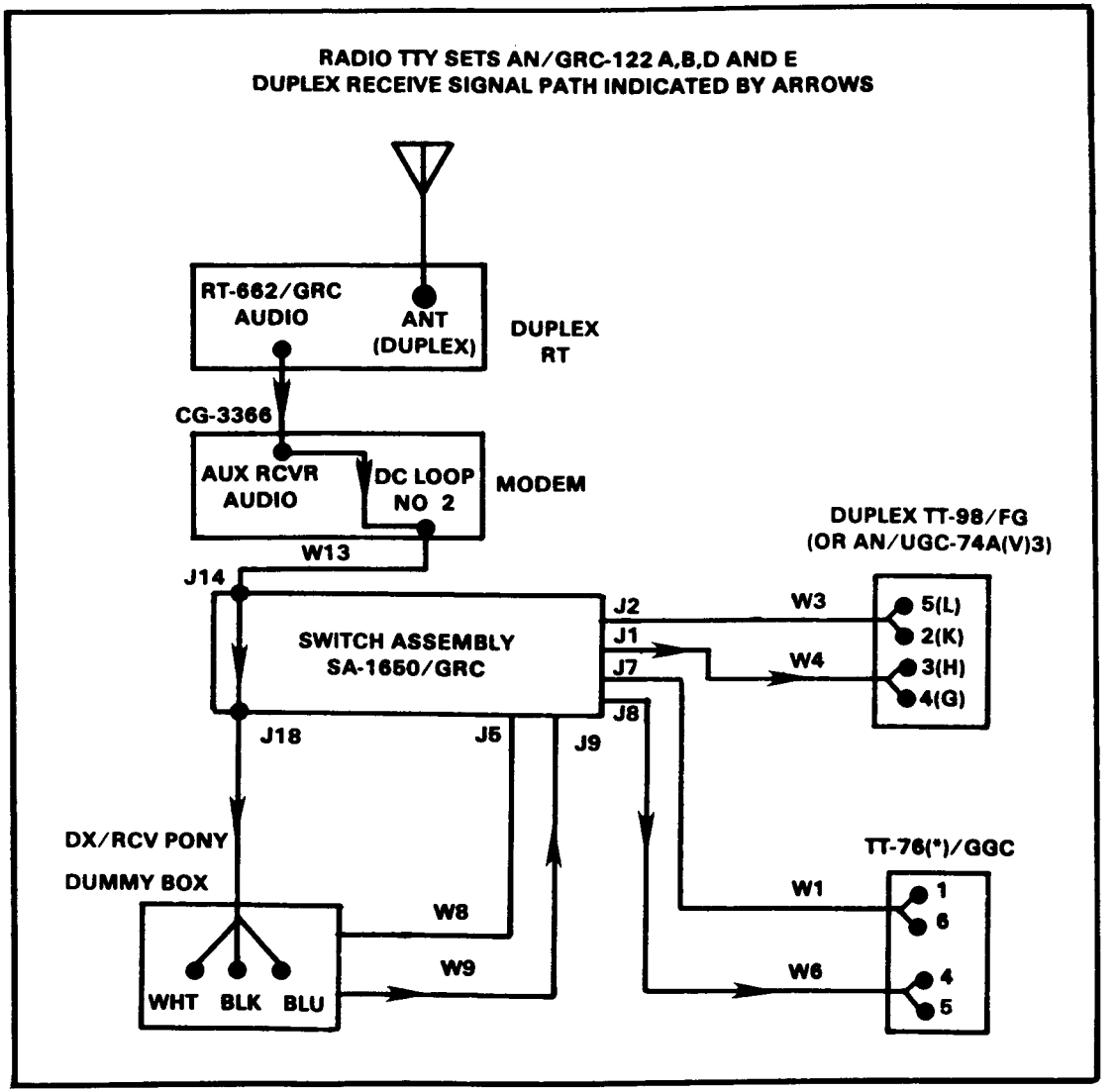

Figure 1-5. Signal cabling diagrams (continued).

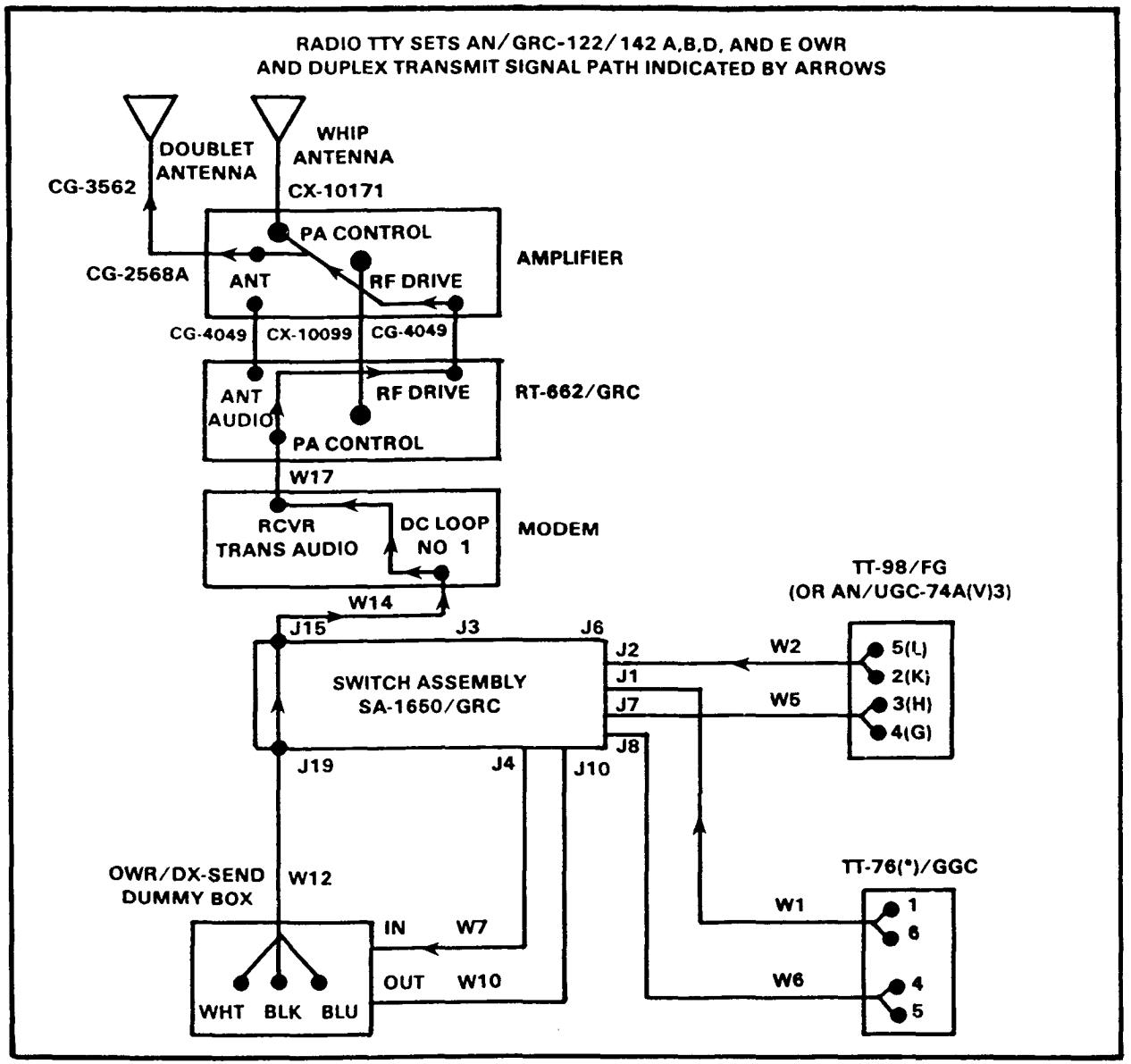

Figure 1-5. Signal cabling diagrams (continued).

Radio Teletypewriter Set AN/GRC-122/142 (Plain and C Models)

Power Distribution Panel

MALFUNCTION	TEST OR INSPECTION	CORRECTIVE ACTION
1. Main circuit breaker kicks out.	Perform starting procedures.	If problem persists, refer to a higher level of maintenance.
2. Power distribution panel meter does not indicate any voltage, and POWER lamp does not light (DC operation).	Step 1. Check for proper connection of power cable to DC entrance box.	If power cable is improperly connected, reconnect.
	Step 2. Check for damaged power cable.	If power cable is damaged, replace.
	Step 3. Check for proper connection of power cable to power source.	a. If power cable is improperly connected to power source, reconnect. b. If problem persists, refer to a higher level of maintenance.
3. AC voltmeter does not indicate any voltage.	Check for 110 VAC indication on AC voltmeter.	a. If voltage is not present, check for proper connection of AC power cable to AC entrance box. b. If voltage is present, check DC power cord of power supply for proper connection to 25 amp outlet.

MALFUNCTION	TEST OR INSPECTION	CORRECTIVE ACTION
		c. If power cord is connected properly, refer to a higher level of maintenance.
4. Power distribution panel DC meter does not indicate any voltage, but POWER lamp does light.	Check that components are operational.	a. If components operate, meter is defective. Refer to a higher level of maintenance. b. If components do not operate, power distribution wiring is defective. Refer to a higher level of maintenance.
5. PWR lamp does not light (DC operation).	Check for defective lamp.	a. If lamp is defective, replace. b. If lamp is not defective, check for proper connection of power cable.
6. Fuse holder glows.	Check for blown fuse.	a. If fuse is defective, replace. b. If fuse is not defective, refer to a higher level of maintenance.

NOTE: If fuse continues to blow after being replaced, refer to a higher level of maintenance. If 28V RECP fuse blows, remove item plugged into 28-volt convenience outlet.

Radio Teletypewriter Set AN/GRC-122/142 (A, B, and E Models)

Power Distribution Panel

MALFUNCTION	TEST OR INSPECTION	CORRECTIVE ACTION
1. DC main circuit breaker kicks out (DC operation).	Perform starting procedures.	If problem persists, refer to a higher level of maintenance.
2. DC VOLTS meter does not indicate voltage, and the DC VOLTS lamp does not light (DC operation).	Step 1. Check for proper connection of power cable to power/signal entrance box.	If power cable is improperly connected, reconnect.
	Step 2. Check for damaged power cable.	If power cable is damaged, replace.
	Step 3. Check for proper connection of power cable to power source.	a. If power cable is improperly connected to power source, reconnect. b. If power cable is properly connected, refer to a higher level of maintenance.
3. DC VOLTS lamp does not light, and meter indicates 28 VDC.	Check for defective lamp.	a. If lamp is defective, replace. b. If lamp is not defective, refer to a higher level of maintenance.

MALFUNCTION	TEST OR INSPECTION	CORRECTIVE ACTION
4. AC VOLTS meter does not indicate voltage, and AC VOLTS lamp does not light (AC operation).	Step 1. Check for proper connection of power cable to power/signal entrance box.	If power cable is improperly connected, reconnect.
	Step 2. Check for damaged power cable.	If power cable is damaged, replace.
	Step 3. Check for proper connection of power cable to power source.	a. If power cable is improperly connected to power source, reconnect. b. If power cable is properly connected, refer to a higher level of maintenance.
5. AC VOLTS lamp does not light, and meter indicates AC voltage.	Check for defective lamp.	a. If lamp is defective, replace. b. If lamp is not defective, refer to a higher level of maintenance.
6. Power distribution panel meter(s) does not indicate any voltage in AC or DC mode of operation.	Check that components are operational.	a. If components are operational, panel meter (2) is defective. Refer to a higher level of maintenance. b. If components are not operational, power distribution

MALFUNCTION	TEST OR INSPECTION	CORRECTIVE ACTION
		wiring is defective. Refer to a higher level of maintenance.
7. AC main, inverter OWR, inverter DX, PWR SUP, or BLO and LIGHTS circuit breakers kick out.	Check for overload condition.	Reset. If circuit breaker continues to kick out, refer to a higher level of maintenance.
8. RECP circuit breaker kicks out.	Check for overload condition.	Reset. If circuit breaker continues to kick out, remove equipment plugged into associated outlet and refer to a higher level of maintenance.

OWR or DX Inverters

MALFUNCTION	TEST OR INSPECTION	CORRECTIVE ACTION
1. OWR or DX inverter does not energize.	Check for loose cable connection.	If cable connections are tight, refer to a higher level of maintenance.
2. OWR or DX inverter whines when energized (AN/GRC-122/142 Plain and C models).	Check for loose cable connection.	If cable connections are tight, refer to a higher level of maintenance.

Shelter

MALFUNCTION	TEST OR INSPECTION	CORRECTIVE ACTION
1. SHELTER lamp does light.	Check for defective lamp.	If lamp is defective, replace.
2. Shelter lights inoperative.	Step 1. Check that BLACKOUT BYPASS switch is in correct position.	Set BLACKOUT BYPASS switch to correct position.
	Step 2. Check that lights circuit breaker is set to ON.	Set lights circuit breaker to ON.
3. Blower inoperative.	Step 1. Check that blower circuit breaker is set to ON.	If blower circuit breaker is set to OFF, set to ON.

MALFUNCTION	TEST OR INSPECTION	CORRECTIVE ACTION
	Step 2. Check that blower power cord is plugged into receptacle.	a. If blower plug is not plugged into receptacle, plug in.
		b. If blower is plugged into receptacle, refer to a higher level of maintenance.
4. All-fuel heater inoperative.	Step 1. Check thermostat for proper setting.	Set thermostat to proper setting.
	Step 2. Check fuel level.	If fuel is low, refill heater.
	Step 3. Check for damaged or leaking fuel lines.	a. If fuel lines are damaged or leaking, refer to a higher level of maintenance.
		b. If fuel lines are in good condition, heater is defective. Refer to a higher level of maintenance.
5. Air conditioner inoperative.	Step 1. Check air conditioner thermostat for proper setting.	If thermostat is set improperly, set to desired temperature.
	Step 2. Check that AC circuit breaker is set to ON.	If circuit breaker is set to OFF, set to ON.
	Step 3. Check for loose power cable.	a. If power cable is improperly connected, reconnect.

MALFUNCTION	TEST OR INSPECTION	CORRECTIVE ACTION
		b. If power cord is properly connected, refer to a higher level of maintenance.

Operation

MALFUNCTION	TEST OR INSPECTION	CORRECTIVE ACTION
1. Radio tuning procedure cannot be accomplished.	Step 1. Check for loose or improper cable connections.	If cable connections are loose or improperly connected, reconnect.
	Step 2. Check for blown fuse in RT-662/GRC.	If fuse is blown, replace. Refer to TM 11-5820-520-10.
	Step 3. Check for improper antenna installation.	If antenna is improperly set up, reconstruct.
	Step 4. Check for a defective amplifier, refer to TM 11-5820-520-10.	If problem persists, refer to a higher level of maintenance.
2. VSWR too high, ME-165/G meter indicates in red	Check that doublet antenna is installed properly.	a. If doublet antenna is improperly set up, reconstruct. b. If problem persists,

MALFUNCTION	TEST OR INSPECTION	CORRECTIVE ACTION
area when doublet antenna is used.		refer to a higher level of maintenance.
3. Low power output.	Check for defective amplifier, refer to TM 11-5820-520-10.	If problem persists, refer to a higher level of maintenance.
4. No loop current.	Step 1. Check that modem ON-OFF switch is set to ON.	If switch is set to OFF, set to ON.
	Step 2. Check for 20 VDC.	If 20 VDC is not present, check DC power indication on power distribution panel.
	Step 3. For local operation, check that all cable connections are tight and properly connected.	a. If any cables are loose or improperly connected, reconnect. b. If cables are connected properly, refer to a higher level of maintenance.
	Step 4. For remote operation, set LOCAL REMOTE switch to LOCAL.	If loop current is restored, trouble is in remote installation. Check for broken field wires or loose cable connections.
5. No reception in any mode of operation.	Step 1. Ensure all cables are properly connected.	If any cables are loose or improperly connected, reconnect.

MALFUNCTION	TEST OR INSPECTION	CORRECTIVE ACTION
	Step 2. Check for defective RT-662/GRC; refer to TM 11-5820-520-10.	If RT-662/GRC is defective, refer to a higher level of maintenance.
	Step 3. Check for defective modem; refer to TM 11-5805-387-15-1 or -2.	If problem persists, refer to a higher level of maintenance.
6. Teletypewriter motor does not operate (TT-98/FG, AN/UGC-74A (V)3 or TT-76(*)/GGC).	Step 1. Check for proper connection of power cable.	If power cable is loose or improperly connected, reconnect.
	Step 2. Check for defective TTY; refer to TM 11-5815-200-12 (TT-98/FG),TM 11-5815-602-10 (AN/UGC-74A(V)3), or TM-11-5815-238-10 TT-76(*)/GGC).	If problem persists, refer to a higher level of maintenance.
7. Teletypewriter TT-98/FG, AN/UGC-74A (V)3 or TT-76(*)/GGC operation abnormal.	Step 1. Check that all cable connections are tight and properly connected.	If cables are loose or improperly connected, reconnect (paragraph 2-10).
	Step 2. Check for defective TTY; refer to TM 11-5815-200-12 (TT-98/FG), TM 11-5815-602-10 (AN/UGC-74A(V)3, or TM 11-5815-238-10 (TT-76(*)/GGC).	If TTY is defective, refer to a higher level of maintenance.

MALFUNCTION	TEST OR INSPECTION	CORRECTIVE ACTION
	Step 3. Check for defective modem; refer to TM 11-5805-387-15-1 or -2.	If problem persists, refer to a higher level of maintenance.
	Step 4. Check cable W-12. Observe meter on MODEM for ZERO reading.	If meter indicates 20 MA, refer to a higher level of maintenance.
	Step 5. Check for defective secure equipment. Disconnect cables from secure equipment and connect to dummy box.	a. If teletype works properly, secure equipment is defective. Refer to TM for COMSEC equipment. b. If problem persists, refer to a higher level of maintenance.
8. No reception or no transmission in any mode of operation except duplex or pony circuit AN/GRC-122(*) models only).	Step 1. Check that shelter equipment is operational.	a. If local operation is satisfactory, see troubleshooting procedures for remote operation. b. If local operation is not satisfactory, follow troubleshooting procedures applicable to local operation except for duplex or pony circuit.
	Step 2. Check that remote equipment is properly installed.	If equipment is not properly installed, install properly.

MALFUNCTION	TEST OR INSPECTION	CORRECTIVE ACTION
	Step 3. Check H-33/PT or KY-116/U by replacing with a known good unit.	If H-33/PT or KY-116/U is defective, replace.
	Step 4. Check local and remote controls; refer to TM 11-5820-489-10.	If problem persists, refer to a higher level of maintenance.
9. Remote telephone inoperative.	Step 1. Check for loose, broken, or improperly connected field wires.	If field wires are loose, improperly connected, or broken, reconnect or repair.
	Step 2. Check for defective TA-312/PT; refer to TM 11-5805-201-12.	If problem persists, refer to a higher level of maintenance.
10. AUDIO TEL CALL lamp AN/GRC-122/142 Plain and C models) or CALL lamp AN/GRC-122/142 A, B, D, and E models does not light. (CALL lamp operates only during secure operation.)	Step 1. Check for proper polarity of field wires.	Reverse field wires.
	Step 2. Check for defective lamp.	If lamp is bad, replace.

MALFUNCTION	TEST OR INSPECTION	CORRECTIVE ACTION
11. Local duplex operation unsatisfactory.	Step 1. Check for defect in send circuit by performing procedures given in symptoms 1 through 9 for radio associated TTY.	If equipment defect persists, refer to a higher level of maintenance. set, modem, or
	Step 2. Check for a defect in receive circuit by checking all interconnecting cables to associated duplex equipment.	If cables are loose or not properly connected, reconnect.
	Step 3. Check for defective duplex RT-662/GRC; refer to TM 11-5820-520-10.	If duplex defective, refer to a higher level of maintenance.
	Step 4. Check for defective duplex TT-98/FG; refer to TM 11-5815-200-12.	If duplex is defective, refer to a higher level of maintenance.
	Step 5. Check for defective modem; refer to TM 11-5805-387-15-1 or -2.	If problem persists, refer to a higher level of maintenance.
12. Remote duplex operation unsatisfactory.	Step 1. Check local duplex operation. check procedures	a. If local duplex operation is defective, given in symptom 11. b. If local duplex operation is satisfactory, go to steps 2 and 3.

MALFUNCTION	TEST OR INSPECTION	CORRECTIVE ACTION
	Step 2. Check that all field wires are properly connected.	If field wires are improperly connected or polarity is incorrect, reconnect.
	Step 3. Check for defective remote box TTY.	If remote box or remote TTY is defective, refer to a higher level of maintenance. (See Figures 1-6, 1-7, 1-8, 1-9, 1-10 and 1-11.)

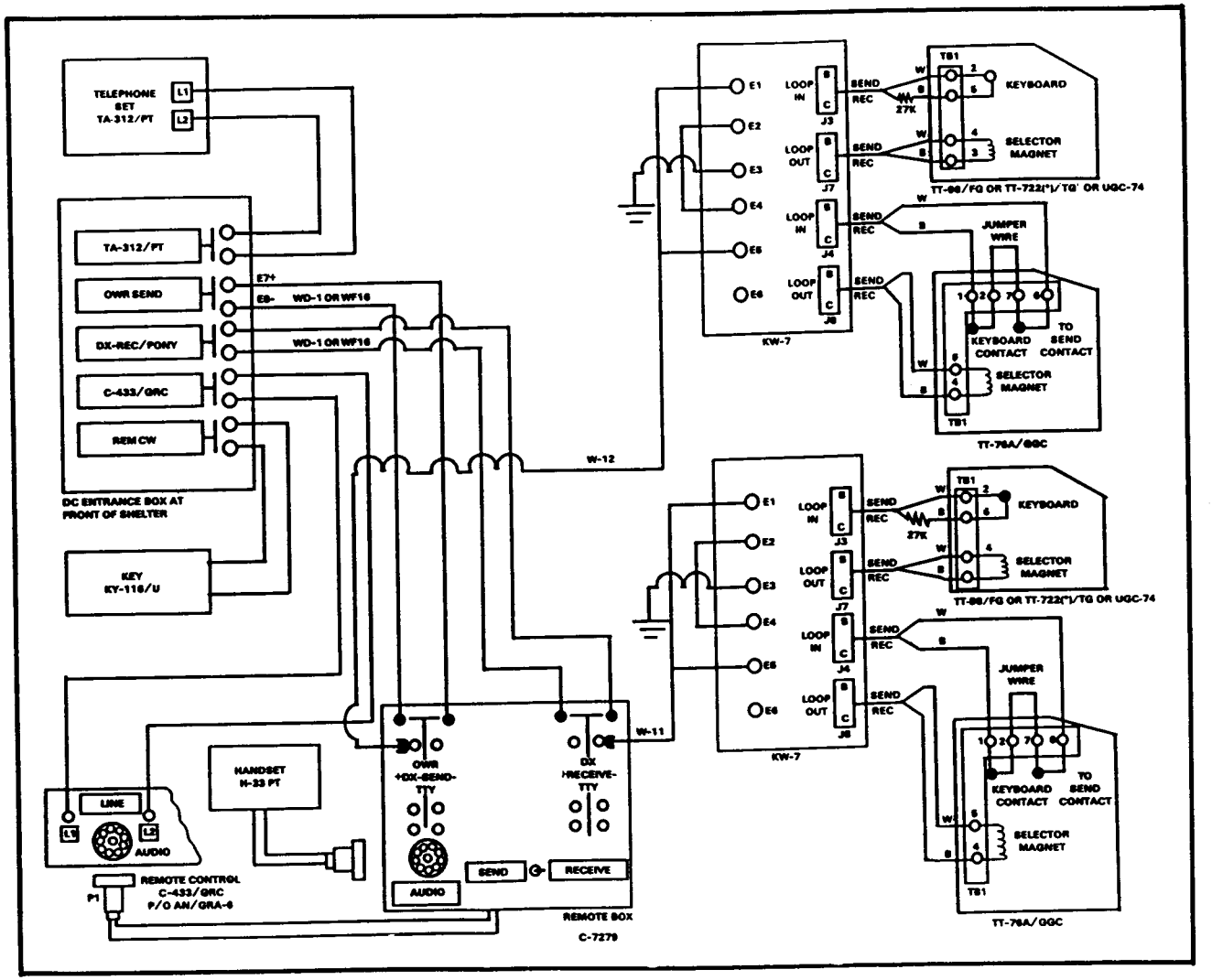

Figure 1-6. Wiring diagram for secure remote operation of Radio Teletypewriter Set AN/GRC-122 in full duplex.

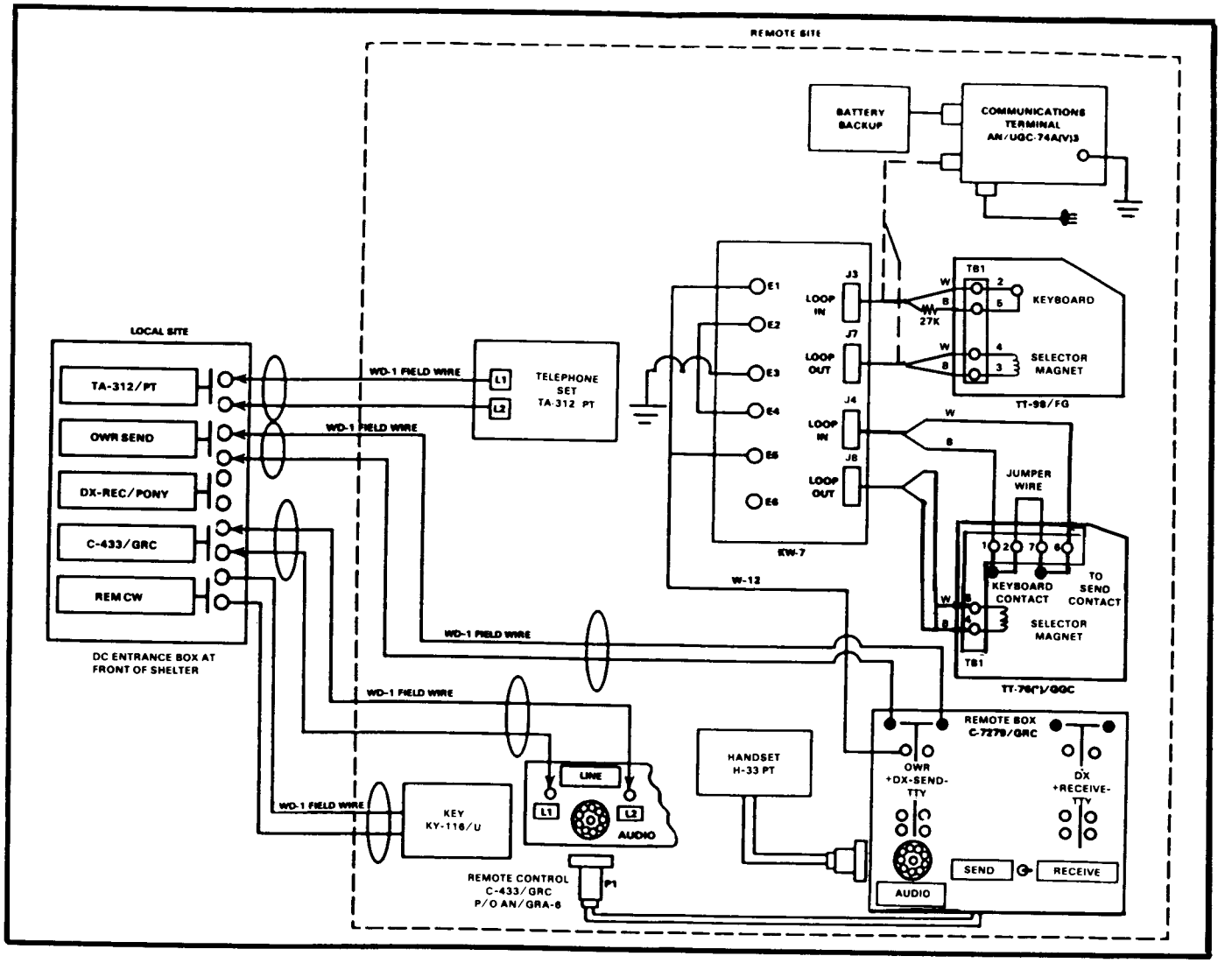

Figure 1-7. Wiring diagram for secure remote operation of Radio Teletypewriter Set AN/GRC-122/142 (plain and C models) with TSEC/KW-7 in OWR operation.

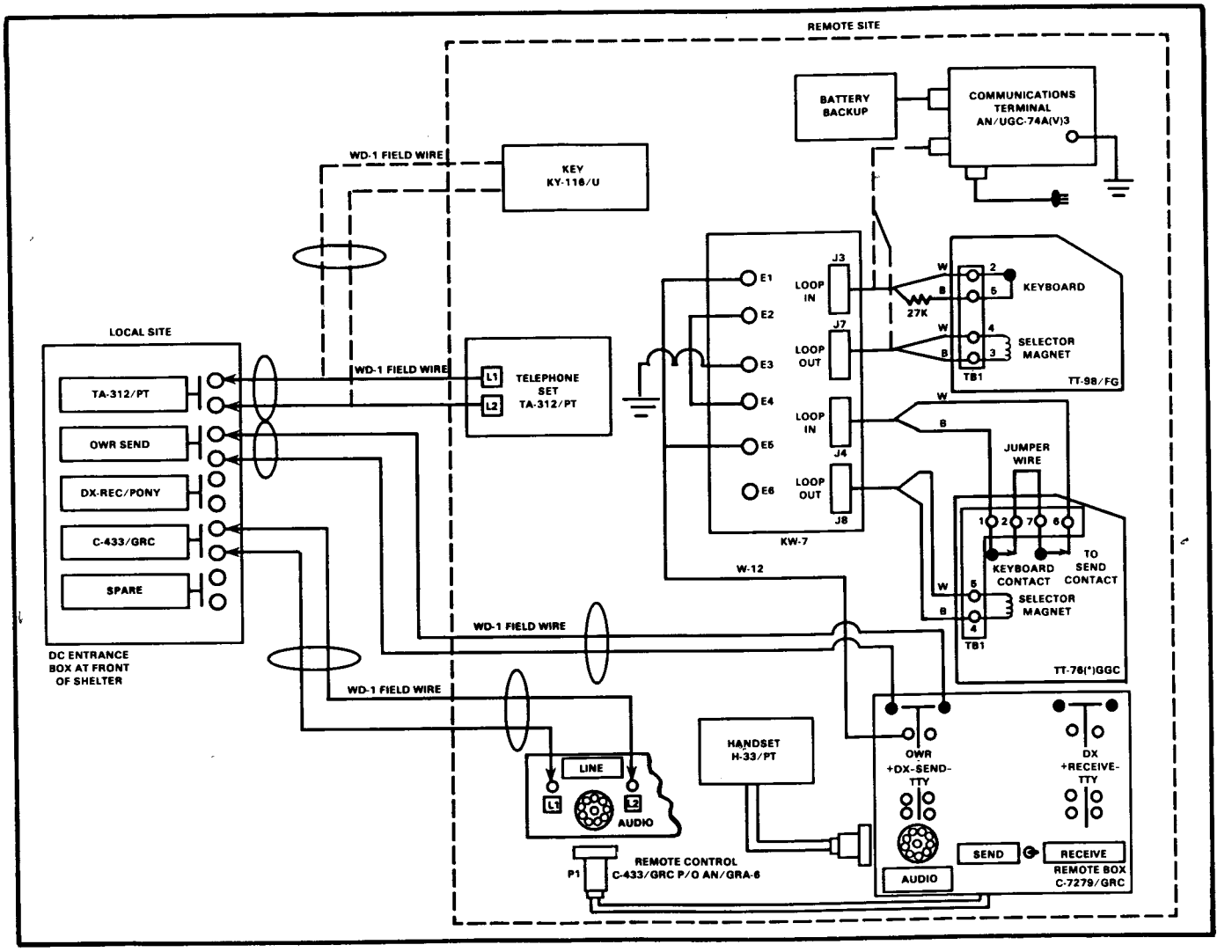

Figure 1-8. Wiring diagram for secure remote operation of Radio Teletypewriter Set AN/GRC-122/142 (A, B, D, and E models) with TSEC/KW-7 in OWR operation.

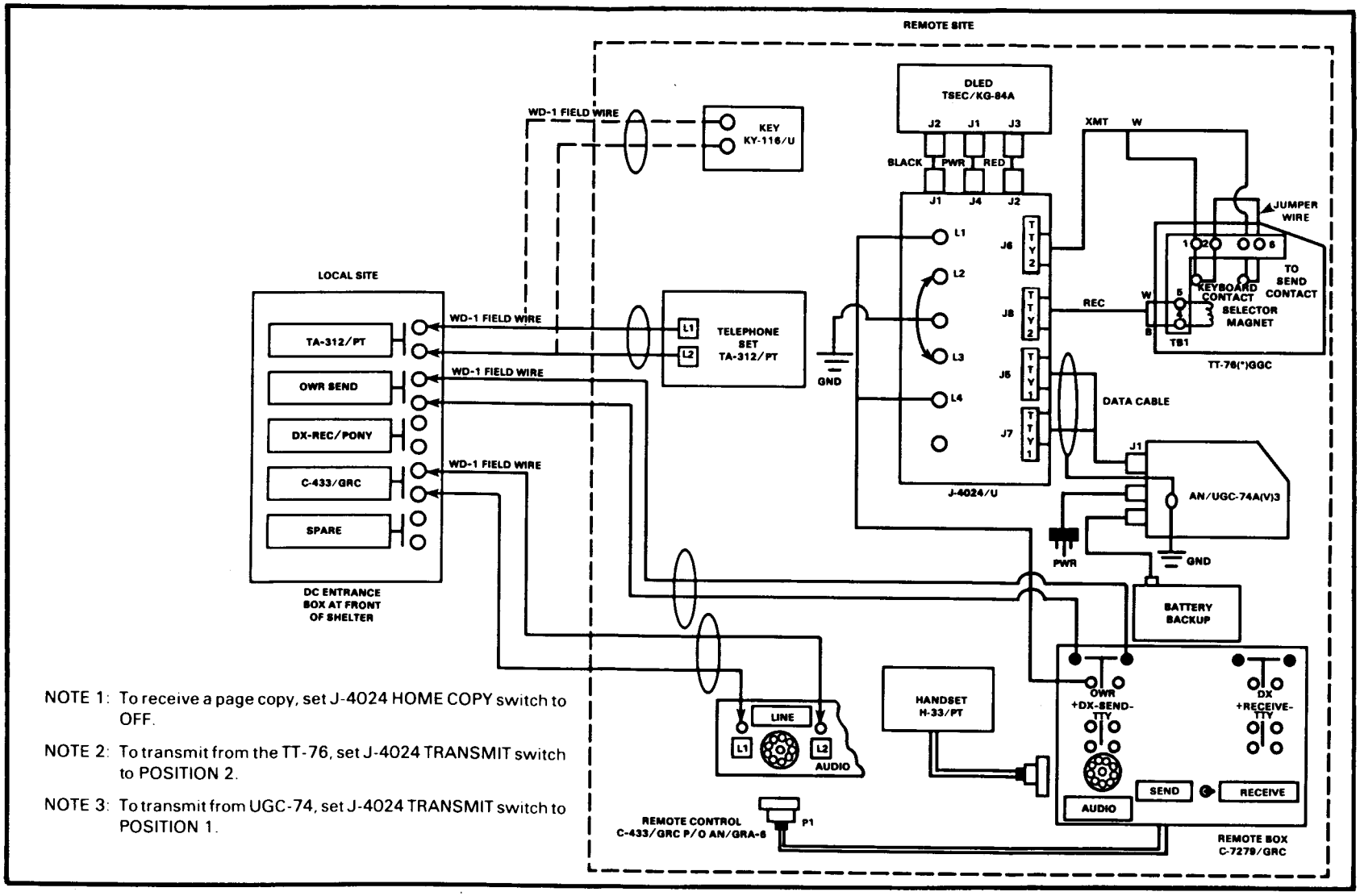

NOTE 1: To receive a page copy, set J-4024 HOME COPY switch to OFF.

NOTE 2: To transmit from the TT-76, set J-4024 TRANSMIT switch to POSITION 2.

NOTE 3: To transmit from UGC-74, set J-4024 TRANSMIT switch to POSITION 1.

Figure 1-9. Wiring diagram for secure remote operation of Radio Teletypewriter Set AN/GRC-122/142 with TSEC/KG-84A in OWR operation.

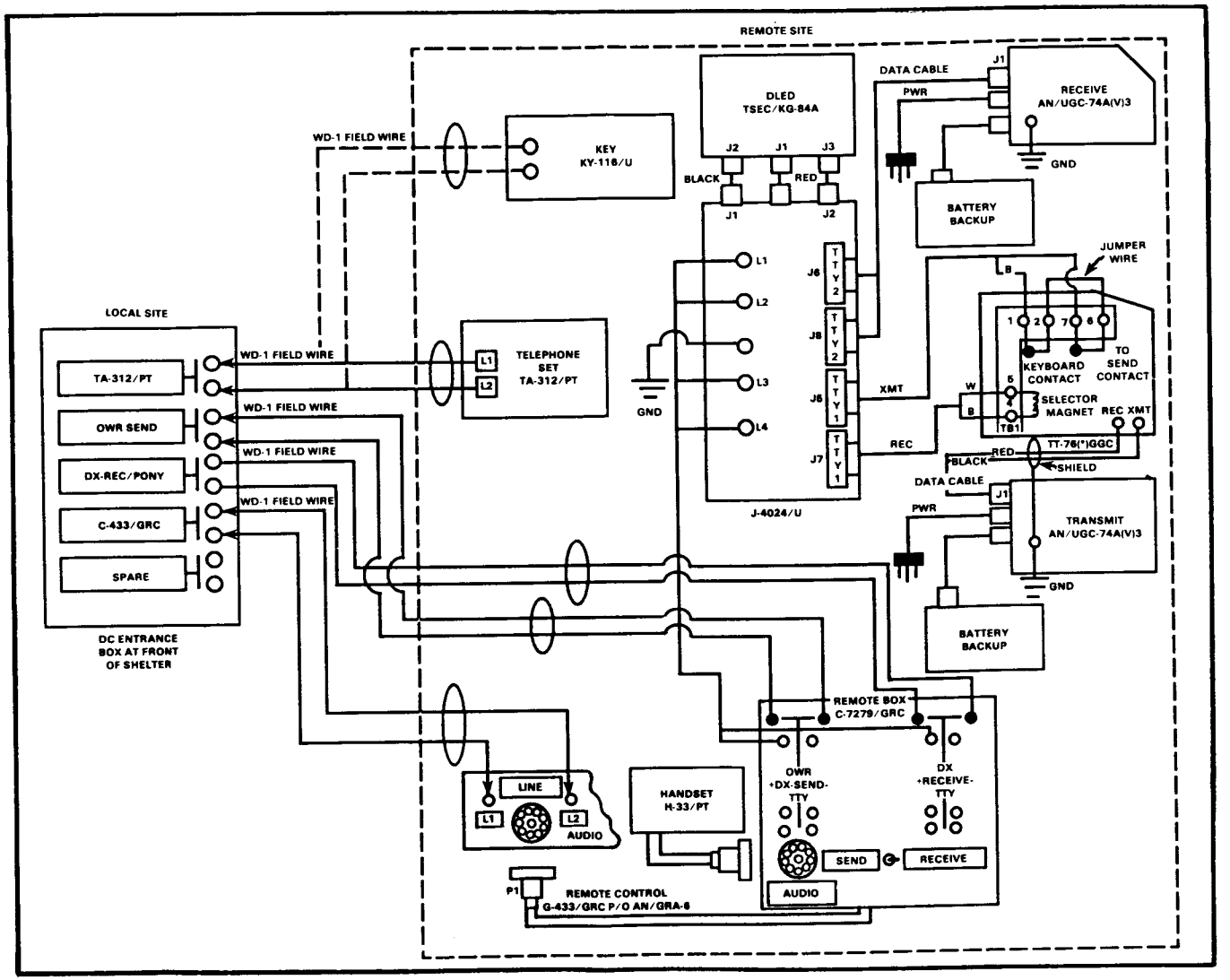

Figure 1-10. Wiring diagram for secure remote operation of Radio Teletypewriter Set AN/GRC-122 with TSEC/KG-84A in duplex operation with AN/UGC-74A(V)3 in line.

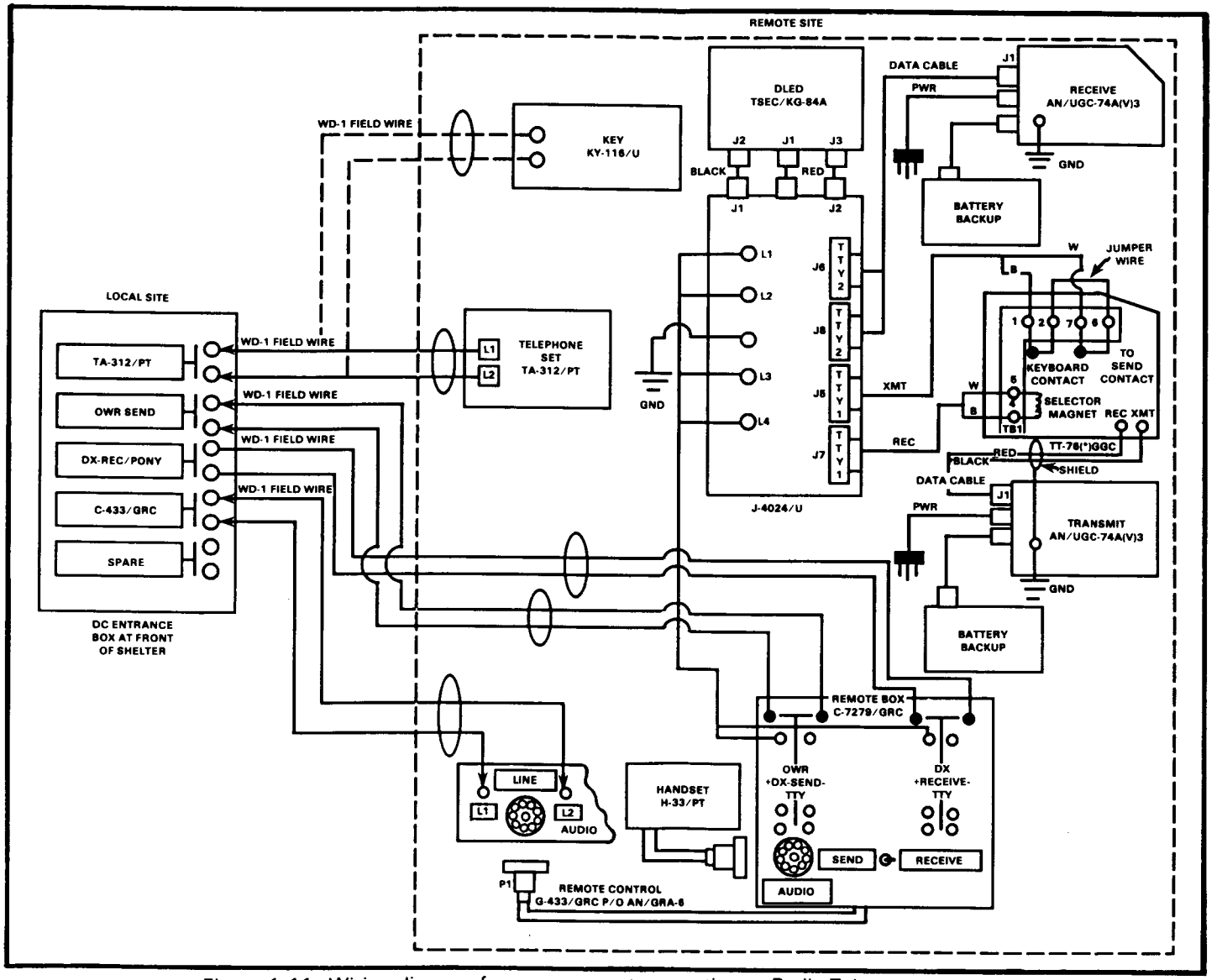

Figure 1-11. Wiring diagram for secure remote operation or Radio Teletypewriter Set AN/GRC-122 with TSEC/KG-84A in duplex operation with TT-76 in line.

Section V. Radio Set AN/GRC-26D

Installation Procedures

STEP	ACTION
1	Install boarding ladder.
2	Drive ground rod into ground.
3	Connect ground strap to ground rod and terminal on shelter.
4	Saturate ground around the ground rod with water.
5	Assemble three each MS-116, one each MS-117, one each MS-118 and the antenna tip for the transmitting antenna. Assemble two each MS-116, one each MS-117, one each MS-118, and the antenna tips for the two receiving antennas.
6	Open shelter vents.
7	Connect power cable.

Radio Set AN/GRC-26D

Prestart Procedures

STEP	UNIT	CONTROL AND SWITCH	POSITION OR ACTION
1	Shelter	Circuit breakers	OFF
2	T-368/ URT(*)	Filament power circuit breaker	OFF (down)
		Plate power circuit breaker	OFF (down)

STEP	UNIT	CONTROL AND SWITCH	POSITION OR ACTION
		TUNE-OPERATE (NORMAL) switch	TUNE (down)
		PLATE RELAY switch	OFF (down)
		KEYING CONTINUOUS switch	NORMAL (down)
3	Modulator MD-239(*)	PWR switch	OFF (down)
4	Matching Unit ME-165	CONTROL switch	POWER position
		ADJUST control	FULLY COUNTER-CLOCKWISE
5	Control Unit C-1123	PWR switch	OFF (down)
		BIAS PWR switch	OFF (right)
6	Converter CV-116(*)	PWR switch (under channel A)	OFF (down)
7	Receivers R-390(*)	FUNCTION switch (both receivers)	OFF
8	Speaker Assembly	CHANNEL A and B switches	OFF (down)
9	Blower Assembly	PWR switch	OFF (down)
10	Teletype-writer Machines	PWR and LIGHT switch	OFF
		SEND-LOCK switch	LOCK

Radio Set AN/GRC-26D

Starting and Preset Procedures

STEP	UNIT	CONTROL AND SWITCH	POSITION OR ACTION
1	Power Unit	Circuit breaker	ON
2	Shelter	Circuit breakers	ON
3	Transmitter T-368(*)	FILAMENT PWR switch	ON (up)
		FILAMENT VOLTAGE control	Adjust for 5-5.2
4	Modulator MD-239(*)	PWR switch	ON
5	Control Unit C-1123	PWR switch	ON
		BIAS PWR switch	ON
6	Blower Assembly	PWR switch	ON (up)
7	Speaker Assembly	Desired channel	ON (up)
8	Receivers R-390(*)	FUNCTION switch	AGC
9	Converter CV-116(*)	PWR switch	ON (Channel A)
		AFC switch	OFF (Channel B)
		AFC SHIFT ADJUSTMENT controls	Set to 0
		AFC THRESHOLD LEVEL controls	OFF

STEP	UNIT	CONTROL AND SWITCH	POSITION OR ACTION
		CHANNEL SELECTOR switch	A
		MARK HOLD XTAL-AFC switches	MARK HOLD
		DRIFT INDICATOR controls	Set to 0
10	Receiver R-390(*)	LINE METER switch	OFF
		LINE GAIN control	Set to 0
		Antenna trim	Set to 0
		AGC switch	FAST
		LIMITER control	OFF
		Audio response	WIDE
		BREAK-IN switch	OFF
		BANDWIDTH switch	Set to .1 KC
		BFO pitch	Set to 0
		BFO control	ON
		Dial lock	FULLY COUNTER-CLOCKWISE
		Zero adjust	FULLY COUNTER-CLOCKWISE
		Local gain	Set to 0
		RF gain	Set to 10
		FUNCTION switch	CALIBRATE
		Local gain	5

STEP	UNIT	CONTROL AND SWITCH	POSITION OR ACTION
		Kilohertz change	Closest 100 kHz
		Zero adjust	FULLY CLOCKWISE
		Kilohertz change	ZERO BEAT
		Zero adjust	FULLY COUNTER-CLOCKWISE
		FUNCTION switch	AGC
		Kilohertz change	ASSIGNED FREQUENCY
		Local gain	Set to 0
11	Control C-1123	SIDETONE switch	OFF
		Hybrid balance	Arrow UP
		REMOTE TELEPHONE switch	Local telephone
		TELETYPE switch	Normal OW
12	Switch SA-1253	SECURITY EQUIPMENT switch	Set to APPLICABLE position
13	Modulator MD-239(*)	BAND SELECTOR switch	Set to FREQUENCY BAND
14	Transmitter T-368(*)	600 Ohm line gain	COUNTER-CLOCKWISE

STEP	UNIT	CONTROL AND SWITCH	POSITION OR ACTION
		Carbon mike gain	FULLY COUNTER-CLOCKWISE
		Modulator bias	FULLY COUNTER-CLOCKWISE
		SERVICE SELECTOR switch	FSK
		BAND SELECTOR switch	FREQUENCY RANGE
		TUNING control	ASSIGNED FREQUENCY
		EXCITATION METER switch	PA Grid X2
		PA BAND switch	FREQUENCY RANGE
		PA loading	28.0
		PA tuning	Calibration chart
15	Tuning Unit TN-339	RANGE switch	Appropriate setting
		Frequency increase	Calibration chart
		Coupling increase	Calibration chart

NOTE: When operating in the 10-20 MHz range, the LOW FREQUENCY INCREASE control for the 2-10 MHz range must be set to 30.

Radio Set AN/GRC-26D

Tuning Procedures

STEP	UNIT	CONTROL AND SWITCH	POSITION OR ACTION
1	T-368(*)	KEYING CONTINUOUS-NORMAL	KEYING CONTINUOUS
2	R-390(*)	Local gain	As needed
		BANDWIDTH kHz switch	.1 KC
3	T-368(*)	Turn TUNING control	ZERO BEAT
		KEYING CONTINUOUS-NORMAL	NORMAL
4	R-390(*)	Local gain	0
		BREAK-IN switch	ON
5	T-368(*)	Plate power	ON
		KEYING CONTINUOUS-NORMAL (load transmitter)	KEYING CONTINUOUS
		CAUTION When the MATCHING UNIT CONTROL switch is set to POWER, ADJUST, or SWR, full transmitter output power is dissipated in the dummy load of the matching unit (ME-165). To avoid damage to the unit, do not apply power continuously for longer than 1 minute.	
		PA tuning	Dip PA Plate

STEP	UNIT	CONTROL AND SWITCH	POSITION OR ACTION
		PA loading and PA tuning	Maximum 150 MA PA Plate
		KEYING CONTINUOUS-NORMAL	NORMAL
		TUNE-OPERATE switch	OPERATE
		KEYING CONTINUOUS-NORMAL	KEYING CONTINUOUS
		PA tuning	Dip PA Plate
		PA loading and PA tuning	Maximum 350 MA PA Plate
		KEYING CONTINUOUS-NORMAL	NORMAL
		NOTE 1: Maximum PA Plate is 275 MA for voice or FSK/AM.	
		NOTE 2: When operating in VOICE or VOICE/FSK mode, place EXCITATION METER switch in Mod Plate X20 and SERVICE SELECTOR switch in either AM or FSK/AM position. While keying microphone, adjust modulator bias reading to 2.5. Carbon Mike Gain no higher than 1.1.	
6	ME-165	CONTROL switch	ADJUST
7	T-368(*)	KEYING CONTINUOUS-NORMAL	KEYING CONTINUOUS

STEP	UNIT	CONTROL AND SWITCH	POSITION OR ACTION
9	T-368(*)	KEYING CONTINUOUS-NORMAL	NORMAL
10	ME-165	CONTROL switch	SWR
11	T-368(*)	KEYING CONTINUOUS-NORMAL	KEYING CONTINUOUS
12	TN-339	FREQUENCY control	Minimum reading ME-165
		COUPLING control	Minimum in Green ME-165
13	T-368(*)	KEYING CONTINUOUS-NORMAL	NORMAL
14	ME-165	CONTROL switch	OPERATE
15	T-368(*)	TUNE-OPERATE switch	TUNE
16	R-390(*)	RF gain	CLOCKWISE
		Local gain	AS NEEDED

Radio Set AN/GRC-26D

Stopping Procedures

STEP	UNIT	CONTROL AND SWITCH	POSITION OR ACTION
1	TT-98	REC-SEND switch	REC
2	Teletype-writer Machines	LIGHT and MOTOR switches	OFF

STEP	UNIT	CONTROL AND SWITCH	POSITION OR ACTION
3	T-368(*)	KEYING CONTINUOUS-NORMAL	NORMAL
		TUNE-OPERATE switch	TUNE
		PLATE RELAY switch	OFF
		Plate power circuit breaker	OFF
4	MD-239(*)	PWR switch	OFF
5	ME-165	CONTROL switch	POWER
		ADJUST control	FULLY COUNTER-CLOCKWISE
6	C-1123	PWR switch	OFF
		BIAS switch	OFF
7	CV-116	PWR switch	OFF
8	R-390s(*)	FUNCTION switches	OFF
9	Speaker Assembly	CHANNEL switch	OFF
10	Blower Assembly	PWR switch	OFF
11	T-368(*)	Filament power breaker	OFF
12	Shelter	Circuit breakers	OFF
13	Generator	Circuit breaker	OFF
		STOP-START switch	STOP

Section VI. Radio Teletypewriter Set AN/GRC-46

Installation Procedures

STEP	ACTION
1	Check equipment for completeness.
2	Site radio teletypewriter set.
3	Erect whip antenna.
4	Ground shelter: • Install ground a minimum of 8 feet into the ground. • Moisten area around ground rod with water. • Attach ground strap between ground and ground stud of radio teletypewriter set.
5	Place TSEC/KW-7 in rack provided and connect signal cables to TSEC/KW-7.

Radio Teletypewriter Set AN/GRC-46

Preoperational Procedures

STEP	ACTION
1	Determine operating frequency from current SOI.
2	Start vehicle and adjust throttle for 28 volts DC reading on DC volts meter of J-688/GR or J-2491/GR.
3	Release antenna tie-down rope, if applicable.
4	Ensure vehicle is grounded properly.
5	Set FUNCTION BOX LIGHTS switch to ON.

STEP	ACTION
6	Set JUNCTION BOX switch to ON. (The blower should start and damper flap should swing open freely.)
7	Ensure BAND SELECTOR and TUNING controls are locked on the transmitter.

Radio Teletypewriter Set AN/GRC-46

Prestart Procedures

STEP	COMPONENT	CONTROL	POSITION
1	Radio Transmitter T-195(*)/GRC-19	SERVICE SELECTOR switch	OFF
		DIAL DIM switch	DIM or FULL, as desired
		RELAY-NORMAL-DUPLEX switch	NORMAL
		TEST METER	PA CATHODE
		LINE LEVEL	+12
2	Radio Receiver R-392/URR	PRESET CHANNELS switch	Desired channel
		FUNCTION switch	OFF
		BFO switch	OFF
		BFO PITCH	0
		AGC switch	ON
		ANT TRIM	0
		AF GAIN control	CENTER RANGE

STEP	COMPONENT	CONTROL	POSITION
		BANDWIDTH switch	4 KC
		DIAL DIM switch	DIM or ON, as desired
		RF GAIN SQUELCH THRESH control	EXTREME CLOCKWISE
		DIAL LOCK	UNLOCKED
3	Modulator, Radio Transmitter MD-203/GR	PWR switch	OFF
	Converter, Frequency Shift CV-278/GR	PWR switch	OFF
4	Interconnecting Box J-668/J-2491/GR	SERVICE switch	MARK HOLD
		Main power circuit breaker	OFF
		TTY PWR switch	OFF
		CRYPT switch	OFF
		FUNCTION SELECTOR switch	BIAS 30 MA
5	Teletypewriter Set AN/UGC-4	PWR switch (located inside cover, right side rear)	OFF
		MOTOR switch	OFF
6	Reperforator-Transmitter Teletypewriter TT-76(*)/GGC	LIGHT switch	OFF

STEP	COMPONENT	CONTROL	POSITION
		SEND-LOCK switch	SEND
		Distributor level	FEED-RETRACK
		SELECTOR switch	3
		PWR switch	OFF
		LIGHT switch	OFF
		MOTOR switch	OFF
7	Teletypewriter Shelf	REC-SEND MARK HOLD switch	MARK HOLD

Radio Teletypewriter Set AN/GRC-46

Starting Procedures

STEP	UNIT	CONTROL	ACTION
1	J-668/ J-2491/GR	MAIN PWR switch	Place at ON. The DC VOLTS meter should indicate between 27.5 and 28 volts.
2	T-195(*)/ GRC-19	SERVICE SELECTOR switch	Place at STANDBY.
3	R-392/URR	FUNCTION switch	Place at NORMAL.
4	CV-278/GR	PWR switch	Place at ON.
5	MD-203/GR	PWR switch	Place at ON. Allow the equipment to

STEP	UNIT	CONTROL	ACTION
			warm up for 5 minutes.
6	J-668/ J-2491/GR	TTY switch	Place at ON, for teletypewriter and reperforator operation.
		BIAS 30 MA ADJUSTMENT control	Loosen the locknut, and adjust for a meter reading of 30 milliamperes on the DC milliamperes meter. Tighten the locknut.

FSK Reception

STEP	UNIT	CONTROL	ACTION
1	R-392/URR	FUNCTION switch	Operate to NORMAL.
		DIAL LOCK control	Turn DIAL LOCK to the left (counter-clockwise).
		BFO switch	Turn to ON.

STEP	UNIT	CONTROL	ACTION
		FREQUENCY SELECTOR controls (MEGACYCLES and KILOCYCLES)	Adjust until desired frequency is indicated on FREQUENCY indicator.
		BANDWIDTH switch	Turn to 4 KC.
		BFO PITCH control	Adjust until desired tone of the beat note is heard.
		AF GAIN control	If signal is being received, adjust until level of signal is loud and clear.
		Carrier level meter	Observe; it may or may not show a reading.
		KILOCYCLES control and ANT TRIM control	Adjust to obtain maximum loudness. If reading was observed on carrier level meter, adjust controls to obtain peak reading on meter.
		AF GAIN control	If signal is now too loud, turn

STEP	UNIT	CONTROL	ACTION
			control to obtain desired level.
2	CV-278/GR	PWR switch	Place at ON.
3	R-392/URR	ANT TRIM	Adjust to obtain maximum indication on signal input meter of CV-278/GR.
		RF GAIN control	Adjust until signal input meter of CV-278/GR indicates 5. If 5 cannot be obtained, set RF GAIN control to obtain highest possible indication on meter.
4	CV-278/GR	DISCRIMINATOR meter	Meter needle should oscillate around zero when FSK signal from distant transmitter is properly tuned. When no FSK signal is received from distant transmitter, meter should indicate zero.
5	AN/UGC-4	POWER, LIGHT, and MOTOR switches	Place at ON.

STEP	UNIT	CONTROL	ACTION
		SEND-LOCK switch	Place at SEND.
6	TT-76(*)/GGC	POWER, LIGHTS, and MOTOR switches	Place at ON.
		SELECTOR switch	Turn to position 1.
7	J-668/ J-2491/GR	FUNCTION SELECTOR switch	Place at LINE 60 MA. The DC MILLIAMPERES meter should indicate 60 milliamperes. If the value is not obtained, loosen the LINE 60 MA ADJUSTMENT control locknut, and adjust the control until the meter indicates 60 milliamperes. Tighten the locknut.
8	CV-278/GR	SERVICE switch	Turn to NORMAL.
9	Teletypewriter shelf	REC-SEND MARK HOLD switch	Place at REC. If distant station is transmitting FSK, the page printer and reperforator will print clear copy.

STEP	UNIT	CONTROL	ACTION
10	CV-278/GR	SERVICE switch	If clear copy is not received, turn to REV.
11	R-392/URR	KILOCYCLES control	A slight readjustment may be necessary to obtain readable copy.
		DIAL LOCK control	Turn FULLY CLOCKWISE.
		RF GAIN SQUELCH control	Turn FULLY COUNTERCLOCKWISE. Page printer and reperforator-transmitter will print garbled copy. Adjust control until they print legible.
			NOTE: Whenever the received signal goes off the air or is interrupted, the page printer and reperforator-transmitter will print garbled copy unless the REC-SEND MARK HOLD switch is

STEP	UNIT	CONTROL	ACTION
			placed in the MARK HOLD position or the CV-278/GR SERVICE switch is placed in the MARK HOLD position. Under these conditions, the receiver must be monitored.
		FUNCTION switch	If noise or static interferes with received signal (voice or FSK operation), turn to LIMITER.
		BFO switch	Turn to OFF, if received signal is below a reading of 5 on CV-278/GR signal input meter or if voice is expected along with FSK.

Page Printer and Reperforator-Transmitter Operation

Transmission on Teletypewriter Set AN/UGC-4

STEP	UNIT	CONTROL	ACTION
1	Teletypewriter shelf	REC-SEND MARK HOLD switch	Place at SEND. The page printer is now ready to transmit radioteletype messages.

Page Printer and Reperforator-Transmitter Operation

Punching tape using Teletypewriter Set AN/UGC-4 (no transmission).

STEP	UNIT	CONTROL	ACTION
1	T-195(*)/ GRC-19	SERVICE SELECTOR switch	Turn to STANDBY.
2	TT-76(*)/GGC	MOTOR switch	Place at ON.
		LIGHT switch	Place at ON.
		PWR switch	Place at ON.
		SEND-LOCK switch	Place at SEND.
		SELECTOR switch	Turn to position 1.
3	Typewriter shelf	REC-SEND MARK HOLD switch	Place at SEND.

STEP	UNIT	CONTROL	ACTION
4	Transmitter-distributor	START-STOP lever	Place at STOP. The AN/UGC-4 is now ready for operation. The reperforator-transmitter will automatically punch the tape, which will feed out of the left-hand side of the machine.

Page Printer and Reperforator-Transmitter Operation (continued)

Punching Tape using reperforator-transmitter keyboard (no transmission).

STEP	UNIT	CONTROL	ACTION
1	TT-76(*)/GGC	MOTOR switch	Place at ON.
		LIGHT switch	Place at ON.
		PWR switch	Place at ON.
		SEND-LOCK switch	Place at SEND.
		SELECTOR switch	Turn to position 3.
2	Typewriter shelf	REC-SEND MARK HOLD switch	Place at MARK HOLD. The reperforator-transmitter is now ready for the operator

STEP	UNIT	CONTROL	ACTION
			to punch a new tape.
			NOTE: The END OF LINE indicator will light after 65 characters have been typed on each line. This is a warning signal to press the CAR RET, LINE FEED, and LTRS keys and continue

Page Printer and Reperforator-Transmitter Operation (continued)

Transmitting messages by tape

STEP	UNIT	CONTROL	ACTION
1	T-195(*)/ GRC-19	SERVICE SELECTOR switch	TURN to VOICE/ FSK.
2	TT-76(*)/GGC	MOTOR switch	Place at ON.
		LIGHT switch	Place at ON.
		PWR switch	Place at ON.
		SEND-LOCK switch	Place at SEND.
		SELECTOR switch	Turn to position 2.

STEP	UNIT	CONTROL	ACTION
3	Teletypewriter shelf	REC-SEND MARK HOLD switch	Place at SEND. Open the tape cover and insert the tape in the tape guide. Typed messages on the tape must be face up. The perforated holes in the tape must fit the cogs in the feed guide. The tape is now ready for transmission.
4	Transmitter-distributor	START-STOP lever	Place at START.

FSK Transmission

STEP	UNIT	CONTROL	ACTION
1	T-195(*)/ GRC-19	PRESET CHANNEL SELECTOR switch	Turn to channel number assigned to desired frequency. Consult chart on transmitter front panel.

STEP	UNIT	CONTROL	ACTION
2	MD-203/GR	PWR switch	Turn to ON.
		BAND SELECTOR switch	Turn to correspond to the operating frequency of the transmitter. This value (band) is indicated on the TRANSMITTER BAND indicator dial.
3	T-195(*)/ GRC-19	SERVICE SELECTOR switch	Place at VOICE/ FSK.
4	Teletypewriter shelf	REC-SEND MARK HOLD switch	Place at SEND. The TUNING indicator on the transmitter will light. Dynamotor in transmitter will start (Unlettered model).
5	T-195(*)/ GRC-19	TEST METER switch	Place at PA CATHODE. The TEST METER pointer should be in the shaded area of the meter marked PA CATHODE.

STEP	UNIT	CONTROL	ACTION
6	TT-76(*)/GGC	SEND-LOCK switch	Place at SEND. The page printer may now be operated as indicated in TM 11-5815-204-10.
	or		
	AN/UGC-4	SEND-LOCK switch	Place at SEND. The reperforator-transmitter may now be operated as indicated in TM 11-5815-204-10.

Radio Teletypewriter Set AN/GRC-46

Stopping Procedures

STEP	UNIT	CONTROL	ACTION
1	TT-76(*)/GGC	MOTOR switch	Place at OFF.
		LIGHTS switch	Place at OFF.
		PWR switch	Place at OFF.
2	AN/UGC-4	MOTOR switch	Place at OFF.
		LIGHTS switch	Place at OFF.
		PWR switch	Place at OFF.

STEP	UNIT	CONTROL	ACTION
3	J-668/J-2491	TTY switch	Place at OFF.
		CRYPT switch	If used, place at OFF.
4	CV-278/GR	PWR switch	Place at OFF.
5	R-392/URR	FUNCTION switch	Place at OFF.
6	T-195(*)/GGC	SERVICE SELECTOR switch	Place at OFF.
7	J-668/J-2491	MAIN PWR switch	Place at OFF; removes power from all components except the lights and blower.
		BLOWER switch	Place at OFF.
		LIGHTS switch	Place at OFF.

Section VII. Radio Set AN/FRC-93

Description

The AN/FRC-93 is an HF commercial single sideband radio set adapted for military use. It is a continuous tuning radio with 200 kHz bands using the Collins crystal packet. It can operate on either USB or LSB, and is designed to be used in fixed or semifixed application. Current tactical speech security equipment is not compatible with the AN/FRC-93; therefore, secure voice is not a mode of operation. Major components of the AN/FRC-93 include the following:

a. Receiver/Transmitter RT-718 (Collins KWM-2/2A).

b. Power Supply PP-4151 (Collins 516F2).

c. Power Supply PP-3990 (Collins PM-2).

d. Control Group C-7515 (Collins 312B-5).

e. Amplifier AM-3979 (Collins 30L-1).

f. Crystal Unit Set CK-31 (Collins crystal packet CP-1).

Radio Set AN/FRC-93

Installation Procedures

a. Ensure power is turned off on all pieces of equipment prior to making interconnections. Extreme high voltage exists within this equipment, and is interlocked with the amplifier covers. Make no attempt to put the amplifier into service until all compartment covers are in place.

b. Determine which configuration applies, and select applicable figure.

c. Wire and cable equipment to follow diagram.

d. Ground equipment.

e. Erect antenna.

Radio Set AN/FRC-93

Preliminary Checks

STEP	UNIT	CONTROL	ACTION
1	RT-718/ FRC-93	MIC gain	OFF
2		FUNCTION switch	ON

STEP	UNIT	CONTROL	ACTION
3		METER switch	Place at PLATE
4		EMISSION switch	Place at LOCK

When S meter falls to zero, read no signal plate current. (Without linear amplifier, 40 MA; with linear amplifier, 50 MA.) Adjust bias adjust (bottom rear of power supply) for correct indication.

Radio Set AN/FRC-93

Receiver Tuning

STEP	UNIT	CONTROL	ACTION
1	RT-718/ FRC-93	FUNCTION switch	ON
2		EMISSION switch	USB
3		BAND switch	DESIRED BAND
4		MIC gain	ON (Counterclockwise)
5		METER switch	ALC
6		RF gain	FULLY CLOCKWISE
7		AF gain	Comfort Level
8		Exciter tuning	Rock back and forth for peak noise
9		FUNCTION switch	CAL
10		FREQUENCY dial	100 Hz calibration point for zero beat set hairline
11		FUNCTION switch	ON

STEP	UNIT	CONTROL	ACTION
12		FREQUENCY dial	Desired frequency

Radio Set AN/FRC-93

Transmitter Tuning

STEP	UNIT	CONTROL	ACTION
1	KWM-2(A)	PA tuning	Operating frequency
2		PA loading	50 ohm (counter-clockwise)
3		METER switch	PLATE
4		EMISSION switch	TUNE
5		MIC gain	ADJ for maximum meter reading
6		Exciter tuning	Rock for maximum meter indication
7		PA tuning	Dip for minimum current
8		MIC gain	OFF
9		METER switch	GRID
10		MIC gain	ADJ for S3-S6 grid current indication
11		Exciter tuning	Rock for peak grid current
12		MIC gain	OFF
13		EMISSION switch	Lock
14		MIC gain	ADJ for 1/3-deflection on meter

STEP	UNIT	CONTROL	ACTION
15		METER switch	PLATE
16		PA tune	Alternately dip for minimum (tune)
		PA load	And load for maximum, until dip is 230 MA (always dip as final adjustment).
17		EMISSION switch	USB
18		METER switch	ALC
19		MIC gain	ADJ for 1/2-meter scale on voice peaks when transmitting (C-6118 FUNCTION switch in normal).

Radio Set AN/FRC-93

VOX Adjustment

STEP	UNIT	CONTROL	ACTION
1	KWM-2(A)	Microphone	After tuning for operation and while speaking into microphone, do not depress PUSH-TO-TALK switch.

STEP	UNIT	CONTROL	ACTION
			a. Rotate VOX GAIN until voice just keys transmitter.
			b. Put microphone down.
2		FUNCTION switch	Switch to CAL
			a. Tune for audio tone (calibration point).
			b. ADJ audio gain for comfort level.
			c. If tone from speaker keys transmitter, adjust ANTI-VOX GAIN until this no longer happens.
			d. If transmitter unkeys between spoken words, increase VOX Time Constant to satisfy individual speech rate.

Radio Set AN/FRC-93

Amplifier Tuning

Check all antenna and coaxial connections to prevent damage to the set. Tune and load transceiver as in section on receiver/transmitter tuning. Amplifier ON-OFF switch is OFF.

STEP	UNIT	CONTROL	ACTION
1	KWM-2(A)	EMISSION switch	TUNE
2		MIC gain	OFF
3	30L-1/* 30S-1	AMPLIFIER METER switch	TUNE
4		BAND switch	SAME KWM-2(A)
5		LOAD control	1

*See Figure 1-12.

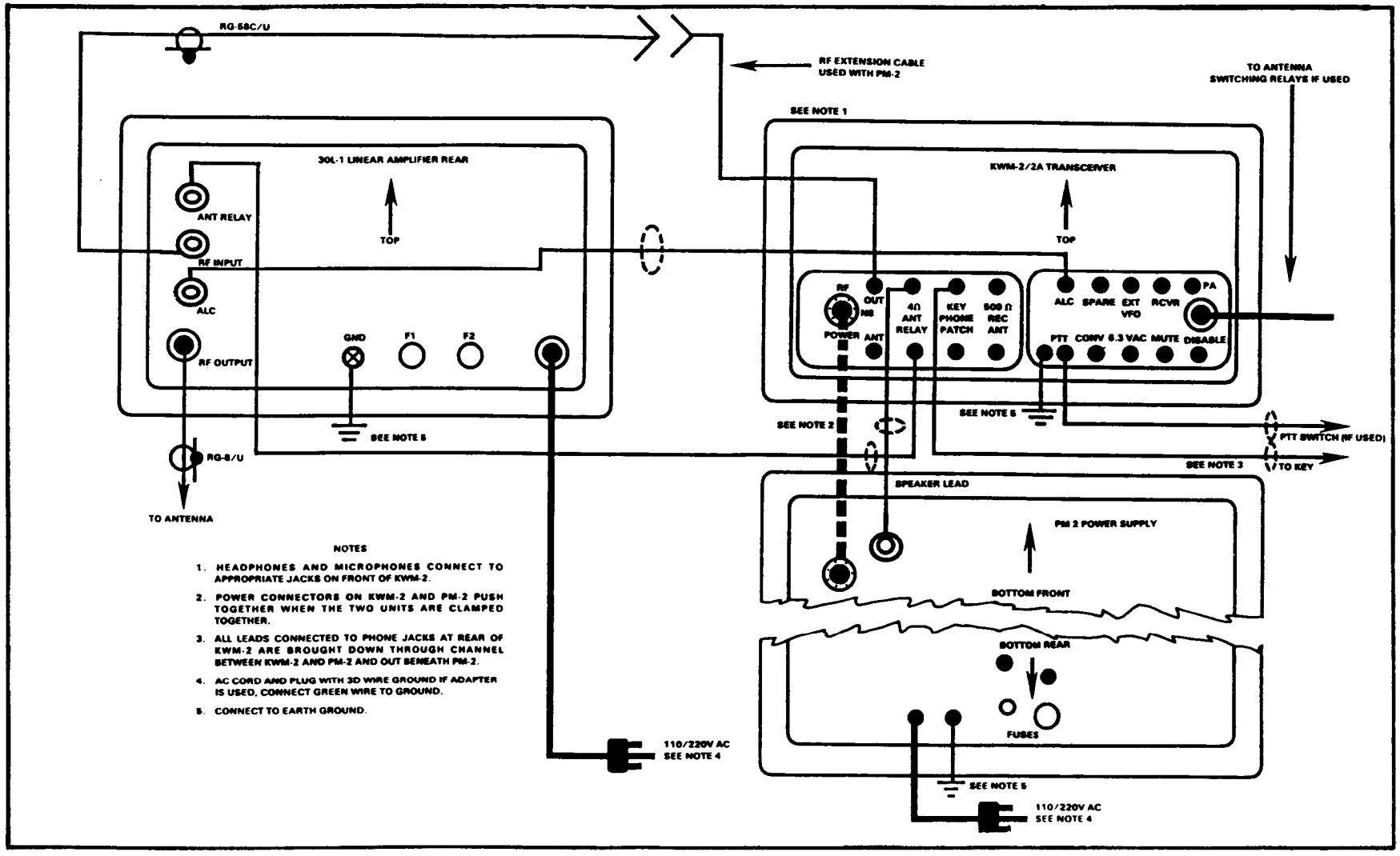

NOTES

1. HEADPHONES AND MICROPHONES CONNECT TO APPROPRIATE JACKS ON FRONT OF KWM-2.
2. POWER CONNECTORS ON KWM-2 AND PM-2 PUSH TOGETHER WHEN THE TWO UNITS ARE CLAMPED TOGETHER.
3. ALL LEADS CONNECTED TO PHONE JACKS AT REAR OF KWM-2 ARE BROUGHT DOWN THROUGH CHANNEL BETWEEN KWM-2 AND PM-2 AND OUT BENEATH PM-2.
4. AC CORD AND PLUG WITH 3D WIRE GROUND IF ADAPTER IS USED, CONNECT GREEN WIRE TO GROUND.
5. CONNECT TO EARTH GROUND.

Figure 1-12. Traveling station interconnections with Amplifier AM-3979 (Collins 30L-1).

STEP	UNIT	CONTROL	ACTION
6		TUNE control	Set IAW loading scale for band used
7		ON-OFF switch	ON
8	KWM-2(A)	MIC gain	3/4-SCALE
9	30L-1/ 30S-1	TUNE control	Dip for MIN on meter
10		LOAD control	ADJ LOAD control for Zero indication on meter, then alternately ADJ Tune for min and Load for zero until final dip is zero. (Always make Tune the final adjustment.)
11	*KWM-2(A)	EMISSION switch	USB
12		AF gain	Comfort level
13	30L-1/ 30S-1	AMPLIFIER METER switch	DC amps
14	KWM-2(A)	MIC gain	ADJ FOR 300 - 350 MA on amplifier meter while transmitting

Normal operation can now take place.

Radio Set AN/FRC-93

Power Indications

STEP	UNIT	CONTROL	ACTION
1	C-6118	METER switch	Place in 2000 FWD position; key transmitter; observe meter.
2		METER switch	Place in 200 reverse position; observe meter. (If reverse power is 20 watts or more, check antenna and coaxial cables and connectors.) **CAUTION** Do not operate with more than 20 watts reverse power or damage to the amplifier will result.

*See Figure 1-13.

CAUTION

Avoid transmitter operation between 5.0 and 6.5 MHz. In this range, the second harmonic of the IF frequency is nearly the same as the desired frequency. In transmit function, some of this energy will pass through the tuned circuits and become false emission.

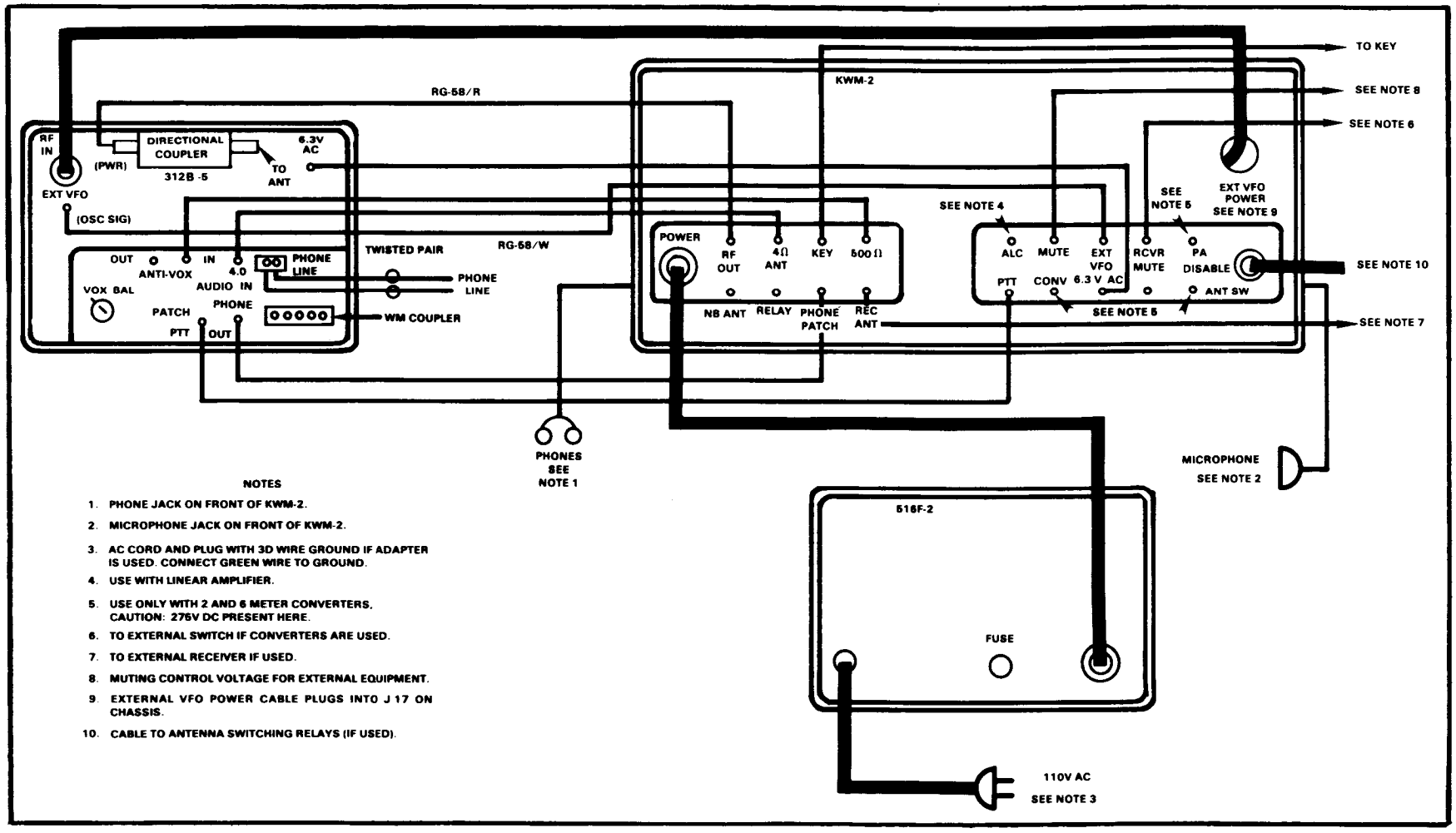

Figure 1-13. Fixed or mobile station interconnection.

Section VIII. Radio Set AN/VRC-64

Operating Procedures

STEP	ACTION
1	Determine operating frequency from SOI.
2	Connect handset to either audio connector.
3	Set FUNCTION switch to ON.
4	Set BAND switch at 30-52 or 53-75, depending on frequency being used.
5	Turn MHz or kHz tuning controls so that desired frequency appears in frequency window.
6	Turn amplifier/power supply PWR switch to ON.
7	Set amplifier/power supply SPKR switch to ON.
8	Adjust RADIO VOLUME control to desired level.
9	Set ANT FREQUENCY CONTROL switch of amplifier/power supply to appropriate frequency.
10	Stopping procedures - turn radio and amplifier/power supply to OFF.

Section IX. Radio Set AN/VRC-12 Series

Installation Procedures

STEP	ACTION
1	Ensure all power is off.
2	Clean surface of mounts and remove electrical connector covers from radio receptacles.
3	Ensure all cables are present and clean.
4	Insert radio(s) into mounts and tighten clamps.

STEP	ACTION
5	Connect radio cables.
6	Erect Antenna AS-1729 and connect antenna cables.
7	Perform the following procedures when using the RT-246 to preset frequencies: a. Open hinged cover of the push buttons. b. Set the BAND switch to AUTO (the BAND switch will not function in A, B or AUTO position unless radio is turned on.) c. Press the push button on which the frequency is to be set up. d. Turn the band selector to the position (A or B) that includes the desired frequency. e. Hold the tune push button depressed and rotate the preset control until desired frequency appears in the dial window. f. For each additional frequency, depress another push button and set up the same as step e above. After frequencies have been entered, press push buttons and check window to ensure correct entry has been made. If an entry is incorrect, repeat step e above.
8	Close hinged cover.

Radio Set AN/VRC-12 Series

Operating Procedures

STEP	ACTION
1	Determine operating frequency from current SOI.
2	Set PWR switch(es) to LOW.
3	Set LIGHT switch(es) to ON.
4	Set SQUELCH switch(es) to desired mode of operation.
5	Set BAND switch(es) to position of operating frequency.
6	Turn MHz and kHz controls to desired frequency.
7	Set SPEAKER switch(es) to ON, if applicable.
8	Connect speaker to SPKR connector, if applicable.
9	Connect handset to AUDIO connector.
10	Adjust VOLUME control(s) to MID-RANGE.
11	Stopping procedure: • Turn radio(s) off. • Clear frequency from radio(s).

Section X. NRI System AN/VRC-12

Installation Procedures

NOTE: The configuration used in this manual is used as an example only. Local SOP will dictate how the NRI system will operate.

STEP	ACTION
1	Drive ground rod into ground.
2	Fasten ground strap to top of ground rod and to binding post on mast base bracket.
3	Saturate ground around the ground rod with water.
4	Assemble one each AS-1729/VRC and one each AS-1730/VRC antenna for use with the AN/VRC-12 series radios.
5	Connect antenna cables to receiver/transmitter.
6	Connect CX-7474/U to receiver/transmitter.
7	Connect CX-7474/U to AN/GSA-7. (See Figure 1-14.)
8	Connect handset or telephone to AN/GSA-7.
9	Connect WD-1 to AN/GSA-7.
10	Connect wire from AN/GSA-7 to switchboard.
11	Install batteries into switchboard.
12	Connect wire to switchboard for telephone.
13	Connect wire to telephone.
14	Install batteries into telephone.

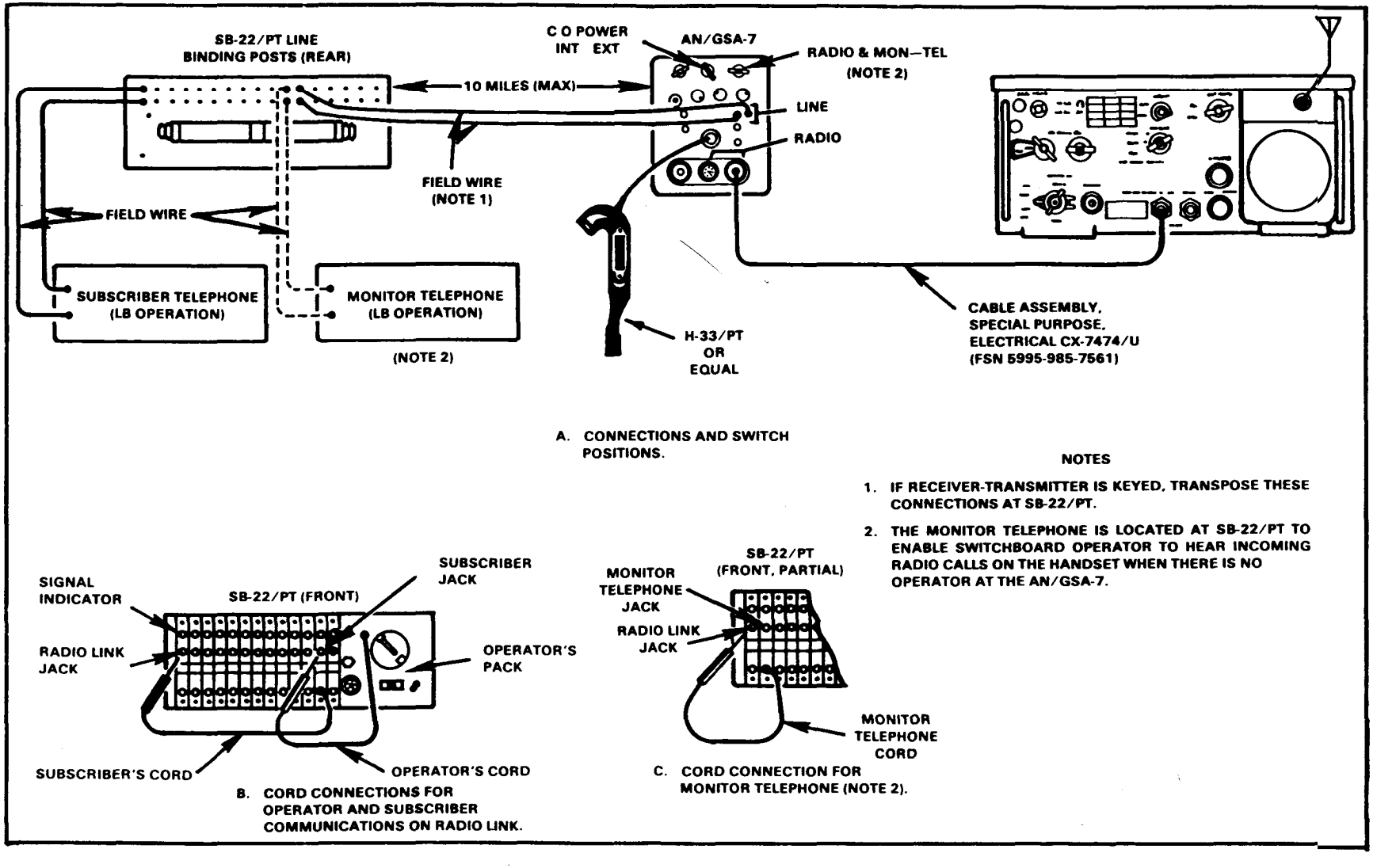

Figure 1-14. Radio Set Control AN/GSA-7 with RT-524/VRC to provide NRI connections and control settings.

NRI System AN/VRC-12

Prestart Procedures

STEP	UNIT	CONTROL AND SWITCH	POSITION OR ACTION
1	Vehicle (if used)	IGNITION switch	OFF
2	Shelter (if used)	Circuit breaker	OFF
3	AN/GSA-7	AC PWR-DC PWR switch	OFF
4	Receiver/ Transmitter	PWR switch	OFF

NOTE: Engine should be placed at ¼-speed for about 5 minutes to allow engine to reach operating temperature.

NRI System AN/VRC-12

Starting and Tuning Procedures

STEP	UNIT	CONTROL AND SWITCH	POSITION OR ACTION
1	Vehicle (if used)	IGNITION switch	ON (Start Vehicle)
2	Shelter (if used)	Circuit breaker	ON
3	Receiver/ Transmitter	SQUELCH switch	OFF
		LIGHT switch	ON

STEP	UNIT	CONTROL AND SWITCH	POSITION OR ACTION
		PWR switch	LOW
		SPEAKER switch	ON
		VOLUME control	MID-RANGE
		SQUELCH switch	ON
		BAND switch	A or B
		MHz-TUNE and kHz-TUNE control	To frequency used
4	AN/GSA-7	AC PWR-DC PWR switch	To appropriate current
		RADIO and MON-TEL switch	T TEL
		CO PWR switch	EXT
5	SB-22	VIS-OFF-AUD switch	AUD
6	TA-312	SELECTOR switch	LB
		EXT-INT switch	INT
		LOUD-LOW control	MID-RANGE

NRI System AN/VRC-12

Stopping Procedure

STEP	UNIT	CONTROL AND SWITCH	POSITION OR ACTION
1	Receiver/ Transmitter	PWR switch	OFF

STEP	UNIT	CONTROL AND SWITCH	POSITION OR ACTION
2	AN/GSA-7	AC PWR-DC PWR switch	OFF
3	Shelter (if used)	Circuit breaker	OFF
4	Vehicle (if used)	IGNITION switch	OFF

Section XI. Radio Set Control Group AN/GRA-6

Installation Procedures (with Radio Set AN/GRC-106)

STEP	ACTION
1	Insert two Batteries BA-30 or BA-3030 and one Battery BA-414A/U into remote unit, and two Batteries BA-30 or BA-3030 into local unit.
2	Attach Handset H-33/PT (or similar type) to AUDIO connector of local and remote unit.
3	Local Control Unit C-434/GRC. Remove set 1 cable from rear of case and secure housing door.
4	Connect set 1 pendant plug to AUDIO connector of AN/GRC-106.
5	Connect Field Wire WD-1 to L1 and L2 binding posts of local and remote units of AN/GRA-6.

Radio Set Control Group AN/GRA-6

Operating Procedures

STEP	ACTION
1	Turn radio set on.
	WARNING **Ensure radio set is installed and grounded correctly prior to operating radio set control group AN/GRA-6.**
2	Set frequency of radio to operating frequency contained in current SOI.
3	Local unit - set REMOTE switch to SET 1.
4	Remote unit - set SELECTOR switch FULLY COUNTER-CLOCKWISE.
5	Press H-33/PT PUSH-TO-TALK switch. Check to ensure RADIO keys. NOTE: If radio set does not key, reverse field wire connections to L1 and L2 binding posts of either local or remote unit. Recheck keying of radio set.
	DANGER **Do not touch binding posts of local or remote unit when ringing, receiving ring, or transmitting, because high voltage is present on the field wire.**
6	For telephone communications between units. a. To prevent accidental keying of radio set by remote control unit, always set LOCAL CONTROL UNIT switch to TEL ONLY, when not in use. b. To ring from either local or remote unit, crank handle of ringing generator. c. Set local unit's LOCAL switch to TEL; set remote unit's SELECTOR switch to TEL. d. Conduct telephone communications between units.

STEP	ACTION
7	For radio operations. a. Local unit - set REMOTE switch to SET 1. b. Remote unit - set SELECTOR switch FULLY COUNTER-CLOCKWISE. c. Press H-33/PT PUSH-TO-TALK switch to transmit; release to receive.
8	Stopping procedures. a. Turn radio set off. b. Disconnect field wire from binding posts. c. Remove batteries from local and remote units. d. Recover field wire. NOTE: For operators PMCS, refer to TM 11-5820-489-10.

Section XII. Radio Set Control Group AN/GRA-39

Installation Procedures

STEP	ACTION
1	Inspect battery compartment, and if needed, clean compartment with small brush, and clean battery contacts with a pencil eraser.
2	Insert six BA-30 or BA-3030 batteries, all in the same direction as the diagram illustrates, in the battery box. Ensure battery terminals are in contact with battery contacts.
3	Ensure all operating controls are free from internal or external binding.

STEP	ACTION
4	Connect Local Control Unit C-2329/GRA-39 radio cable to RETRANSMIT R/W connector on radio set.
5	Attach Field Wire WD-1 to binding posts of local and remote control unit. NOTE: Tie field wire to a solid object before connecting to local and remote control unit binding posts. This prevents damage to units should wire be pulled.
6	Attach Handset H-189/GR to AUDIO connector of remote control unit.

Radio Set Control Group AN/GRA-39

Operating Procedures

STEP	ACTION
1	Ensure Radio Set Control Group AN/GRA-39 is properly installed.
2	Local control unit - turn power ON and set BUZZER VOLUME control to MID-RANGE.
3	Remote control unit - turn ON/OFF/VOLUME control and BUZZER VOLUME to MID-RANGE.
4	Press RINGER button several times in quick succession to ring other end.
5	Set remote control unit TEL-RAD-RAD/SPKR switch to TEL.
6	Turn and hold local control unit TEL-REMOTE-RADIO switch to TEL.
7	Press handset PUSH-TO-TALK switch to talk; release to listen.

STEP	ACTION
8	Place TEL-REMOTE-RADIO switch of local control unit to REMOTE position.
9	Adjust RADIO VOLUME control for comfortable listening level at local control unit handset.
10	Set TEL-RAD-RAD/SPKR switch of remote control unit to RAD or RAD/SPKR.
11	Adjust VOLUME control on remote unit to desired listening level.
12	Press handset PUSH-TO-TALK switch to transmit; release to receive.
13	Stopping procedures: • Turn radio off. • Turn local and remote units off. • Remove field wire from binding posts. • Remove batteries from battery box and store.

NRI System AN/VRC-12

Installation Procedures (using the AN/GRA-39, Receiver/Transmitter RT-524, and Switchboard SB-22/PT)

STEP	ACTION
1	Local Control Unit C-2329/GRA-39. a. Unsnap rear clamps and remove cover. b. Install six BA-30 or BA-3030 batteries. c. Replace rear cover.

STEP	ACTION
	d. Position control unit to allow connection to radio connector.
	e. Connect radio cable connector to the retransmit R/W mike connector on the receiver/transmitter.
	WARNING **Do not press the ringer button while connecting field wire to the binding post.**
	f. Strip one inch of insulation from end of Field Wire WD-1/TT, and connect it to the binding post.
	g. Connect handset to the connector on front panel C-2329/GRA-39.
2	Remote Control Unit C-2328/GRA-39.
	a. Unsnap rear clamps and remove rear cover.
	b. Install six BA-30 or BA-3030.
	c. Replace rear cover and secure.
	d. Position remote control unit to allow connection to SB-22 line pack.
	e. Strip one inch of insulation from end of Field Wire WD-1/TT, and connect it to the binding post.
	f. Connect U-182/U or U-229/U cable AUDIO connector to audio jack on the Remote Control Unit C-2329/GRA-39.
	g. Connect black wire of the U-182 or U-229/U to the top binding post of the Remote Control Unit C-2328/GRA-39.
	h. Strip one inch of insulation from end of single strand WD-1/TT, and connect it to the bottom binding post of the Remote Control Unit C-2328/GRA-39.
3	Switchboard SB-22/PT.
	a. Connect white or off color wire from U-182/U or U-229/U to the top binding post of the desired line pack on the SB-22/PT.

STEP	ACTION
	b. Strip one inch of insulation from end of single strand WD-1/TT, and connect it to the bottom binding post of the same line pack on the SB-22/PT.
	c. Install four BA-30 or BA-3030 in battery pack of SB-22/PT.
	d. Connect Headset-Microphone H-182/PT to AUDIO connector on the operator's pack of the SB-22/PT.

Presets and Adjustments

STEP	ACTION
1	Receiver/transmitter.
	a. Turn receiver/transmitter on.
	b. Adjust controls and knobs according to type of receiver/transmitter in use.
	c. Set desired frequency.
2	Control Unit C-2329/GRA-39.
	a. Turn Control Unit C-2329/GRA-39 on.
	b. Adjust ringer volume to desired level.
3	Remote Control Unit C-2328/GRA-39.
	a. Turn Remote Control Unit C-2328/GRA-39 ON/OFF switch to ON, and adjust VOLUME control to the desired level.
	b. Place FUNCTION switch on Remote Control Unit C-2328/GRA-39 to either RAD or RAD/SPKR.
	c. Adjust ringer volume on Remote Control Unit C-2328/GRA-39 to desired volume level.

STEP	UNIT	ACTION
4	Switchboard SB-22/PT.	
		a. Remove operator's cord from operator's pack.
		b. Place operator's plug into line pack marked radio link.
		c. Depress PUSH-TO-TALK switch on Headset-Microphone H-182/PT to position number 3 radio hold on.
		d. Receiver/transmitter should start transmitting.
		NOTE 1: If receiver/transmitter is keyed before pressing PUSH-TO-TALK switch on the Headset-Microphone H-181/PT, transpose U-182/U or U-229/U wires at the SB-22/PT.
		NOTE 2: The remote control is located next to SB-22/PT to enable operator to hear incoming radio calls. (See Figure 1-15.)

Section XIII. Radio Set AN/PRC-77/25

Operating Procedures

STEP	ACTION
1	Turn FUNCTION switch to ON.
2	Turn BAND switch to the desired operating frequency band.
3	Turn MC tuning and KC tuning control knobs until desired frequency appears in the channel dial.
4	Turn VOLUME control to comfortable listening level.
5	Press Handset H-250/G PUSH-TO-TALK switch and speak into handset. Release switch to listen.
6	Turn FUNCTION switch to SQUELCH to reduce the rushing noise when no signal is being received.
7	Place FUNCTION switch on OFF to turn radio off.

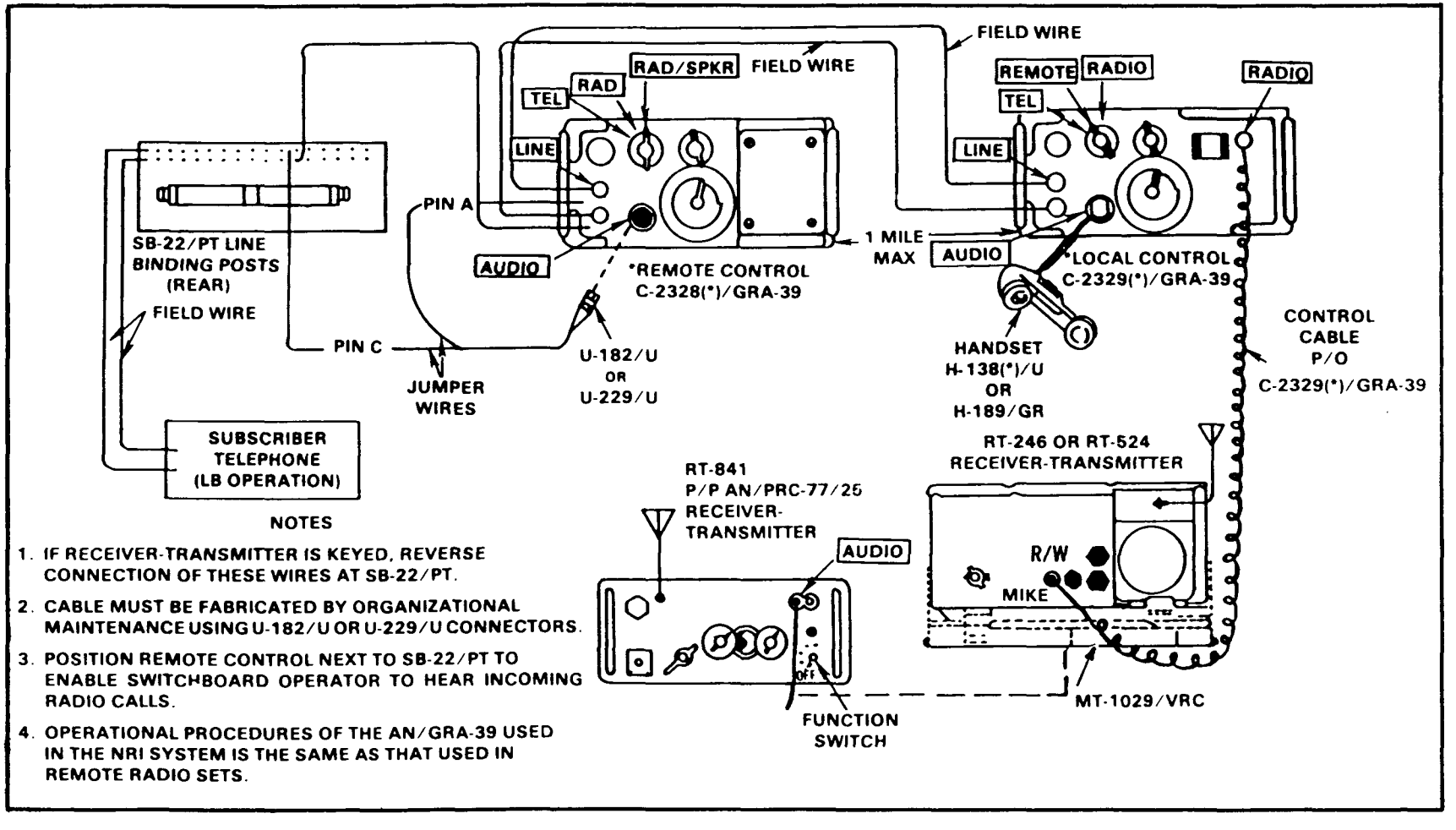

Figure 1-15. AN/GRA-39(*) for remote control and NRI.

Section XIV. Radio Set AN/PRC-104A

Installation and Operating Procedures

a. Transportation and storage. The AN/PRC-104A is an ultra lightweight, HF, manpack radio. The radio set and its components are contained, transported and stored in Radio Set Case CY-8291/PRC-104 (transit case). The transit case normally should be kept closed. To unpack the equipment, unfasten the four latches and remove the transit case cover. Each of the pieces of equipment fits into a molded space. Upon receiving this radio set, ensure the equipment is complete. Inspect the equipment for any shipping damage.

b. The components must be assembled (installed) for operation. Figure 1-16 shows how the components of the AN/PRC-104A are assembled to make the set operational.

- Press the pressure release valve button to equalize pressure before unlatching the transit cover. Then unfasten the four latches securing the cover to the transit case and remove the cover.
- Remove the receiver/transmitter and amplifier/coupler from the transit case. Ensure the connectors on the two pieces are completely engaged by pressing the two together from the ends. Secure the two by using the quick-connect/disconnect latches on the front and rear of the amplifier/coupler. Tighten the latches until snug.
- Attach the battery pack to the bottom of the receiver/exciter and the amplifier/coupler. It is critical to ensure the connectors on the battery pack and the amplifier/coupler are lined up. This is where the electrical connections are made by the battery. Secure the assembly by using the two quick-disconnect latches on the battery pack.

c. The Whip Antenna AT-271A/PRC has seven sections (Figure 1-17). Each section fits into the end of a wider section. A stainless steel, plastic covered cable (or braided plastic cord), under spring tension, is threaded through the sections to keep them together in the operating condition. When the sections are folded, the cable keeps them together as a group and prevents the loss of individual sections. Spring tension is provided by a spiral spring in the base section. Spring section, Antenna Base AT-129/PR (Figure 1-17) is used to keep the antenna stable.

- Remove antenna shock mount from the transit case.
- Screw Antenna Spring Section AB-129/PR into the bottom section of the whip antenna.
- Pull on section 2, 3, 4, 5, 6, and 7. Insert section 2 into section 1. Continue to assemble all sections in this manner.

CAUTION

Do not try to assemble this antenna from the smallest section (7) to the largest (1). Doing so will put too much strain on the nylon cord inside the antenna and cause it to break. Start assembly from the largest end(1).

- Screw the entire assembly into the antenna socket on the radio (Figure 1-16).
- Connect a handset to the radio set upper AUDIO connector.

  The set is now ready to operate.

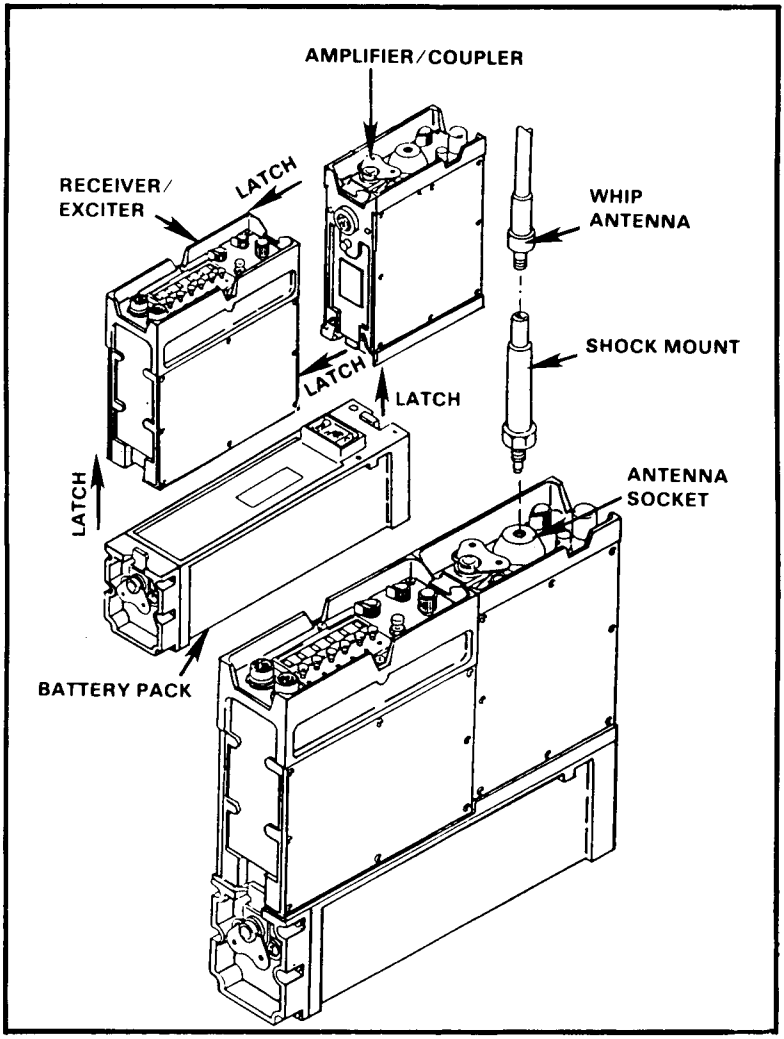

Figure 1-16. Radio Set AN/PRC-104A installation.

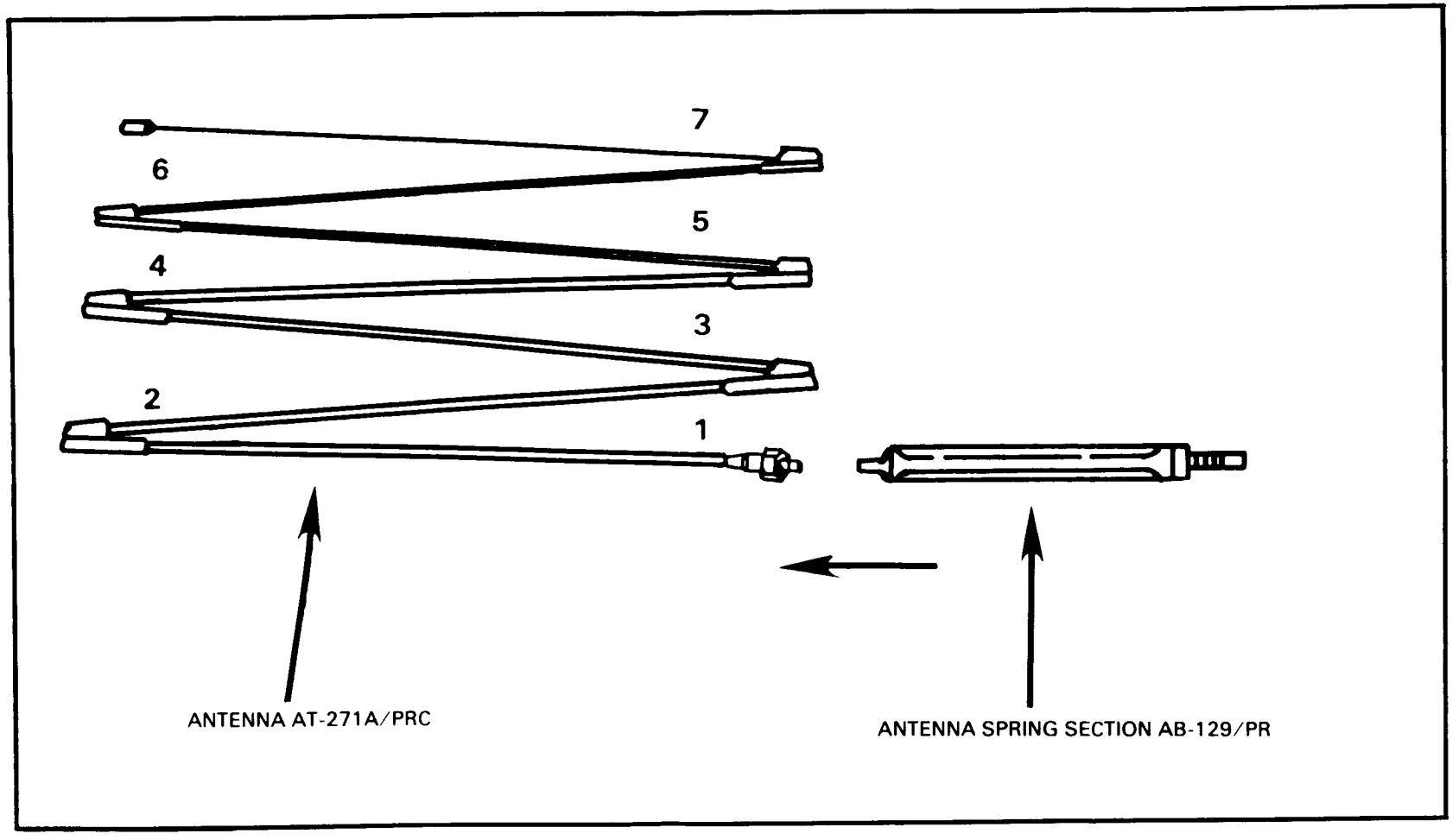

Figure 1-17. Installation of Whip Antenna AT-271A/PRC in Radio Set AN/PRC-104A.

Radio Set AN/PRC-104A

Preoperational Checks

STEP	UNIT	CONTROL OR SWITCH	POSITION OR ACTION
1	Receiver/ Transmitter RT-1209/ URC	OFF/MAX/VOLUME switch	OFF
2	AN/PRC-104A	Assemble receiver/ transmitter and amplifier/coupler	
		Attach a battery pack to bottom of radio set	Secure all latches
		Assemble and mount whip antenna	

NOTE: Take care not to cross thread the antenna base when inserting it into the radio antenna socket.

Radio Set AN/PRC-104A

Presets

STEP	UNIT	CONTROL OR SWITCH	POSITION OR ACTION
1	Receiver/ Transmitter RT-1209/ URC	Handset H-250/189	Connect to UPPER AUDIO connector on receiver/ transmitter

STEP	UNIT	CONTROL OR SWITCH	POSITION OR ACTION
		SB SELECTOR switch sideband	To desired
		MODE SELECTOR switch	V-TR
2	Amplifier/ Coupler AM-6874/ PRC-104	ANT SEL switch	WHIP connector

Radio Set AN/PRC-104A

Energizing Procedures

STEP	UNIT	CONTROL OR SWITCH	POSITION OR ACTION
1	Receiver Transmitter RT-1209/ URC	FREQ SELECT push buttons	Set to desired frequency
		OFF/MAX/VOLUME switch	Comfortable listening level

Radio Set AN/PRC-104A

Tuning Procedures

STEP	UNIT	CONTROL OR SWITCH	POSITION OR ACTION
1	Receiver/ Transmitter RT-1209/ URC	Handset PTT switch	Press momentarily and release
	NOTE: When tuning tone is heard in handset, release PTT switch. The radio set will tune automatically. This will take about three seconds. The radio set is ready to operate.		

Radio Set AN/PRC-104A

Test Procedures

When the radio has concluded its tuning procedure, perform an operational test on the radio. The test procedures are as follows:

- Change frequency by at least 1 kHz; then momentarily press the handset PTT switch.
- Listen for a l-kHz tune tone. (Tuning is brief. It maybe 3 to 12 seconds.)

NOTE: Tune tone should terminate within 12 seconds. This indicates the automatic antenna tuner is operating normally. A continuous, rapid beeping sound in the handset indicates the radio has failed to tune properly (a tuning fault exists).

- Transmit using the handset. Press the PTT switch, and communicate with another radio set on the test frequency. A sidetone in the handset earpiece indicates transmission is satisfactory. (For fault tone, refer to the radio troubleshooting procedure.)

- Repeat the above procedures for test frequencies spaced through the 2 to 30 MHz part of the radio spectrum to test the auto tune feature. Your frequency manager has these frequencies.
- Select a frequency for the time standard broadcast (multiples of 5 MHz; for example, 5, 10, 15, 20 MHz). For this test, one frequency may be better than another, depending on the time of day and station. You may not hear these stations outside the United States.
- Monitor the time standard broadcast and switch sidebands. Verify no change in the pitch of the audible signals. This indicates the frequency accuracy of the radio set is within specifications.
- Turn the radio off. The test is complete. The radio set is good.

Radio Set AN/PRC-104A

Operating Procedures

- Turn MODE switch to V-TR.
- Turn SIDEBAND switch to USB or LSB (see SOI).
- Set frequency to your net operating frequency (see SOI).
- Turn ANT SEL switch to WHIP ANTENNA.
- Turn VOLUME control to desired listening level. Power is applied at this time through the VOLUME control.

  NOTE: If a clicking sound is heard, the battery is a weak (20 volts or less) and needs to be replaced.
- Momentarily press and release the handset PTT switch.

- Listen for l-kHz tune tone. Tuning is brief (3 to 12 seconds).

NOTE: Tune tone should terminate within 12 seconds. This indicates the radio is tuned and ready for operation. A continuous, rapid beeping in the handset indicates the radio has failed to tune properly (a tune fault exists). Refer to the troubleshooting procedures or to organization maintenance.

To communicate with the AN/PRC-104A, use the handset as follows:

- Press the PTT switch, transmit to another station, and release the PTT switch to hear (receive) the other station.
- Press to transmit, and release to listen.
- Listen for sidetone in the handset earpiece. Sidetone indicates you are transmitting.

Radio Set AN/PRC-104A

Modes of Operation

a. Voice.

- Turn MODE SELECTOR switch to V-TR.
- Adjust OFF/MAX/VOLUME switch to comfortable listening level.
- Press handset PTT switch and talk, release it to receive.

b. CW.

- Turn MODE SELECTOR switch to V-TR.
- Adjust OFF/MAX/VOLUME switch to comfortable listening level.
- Connect Leg Key KY-872 to upper AUDIO connector.

- Press leg key to send and release it to receive.

c. Radio silence (voice or CW).

- Turn MODE SELECTOR switch to V-RCV.

d. Remote operation (Figure 1-18).

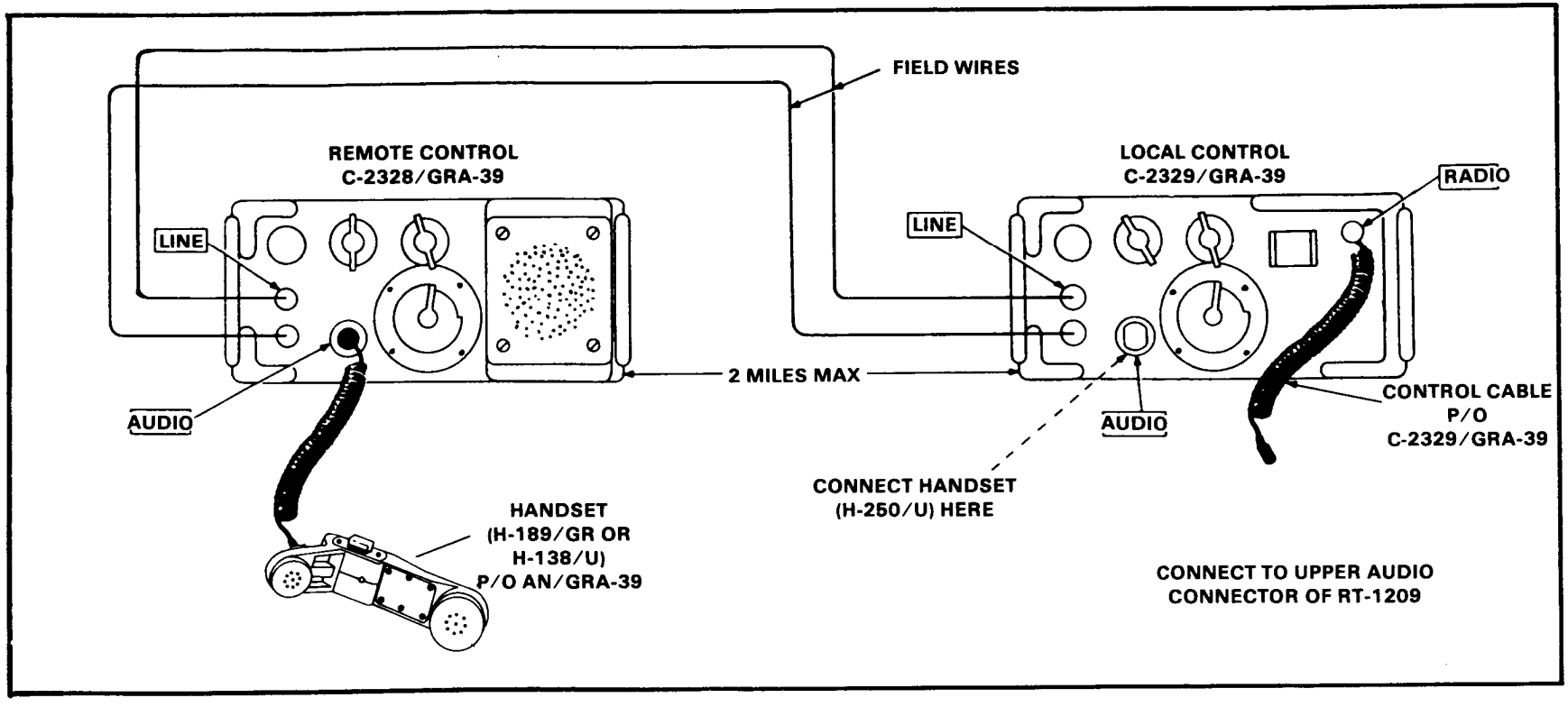

Figure 1-18. Remote Control Unit AN/GRA-39.

e. The Radio Set Control Group AN/GRA-39 controls the remote operation of the tactical radio set. It includes the Remote Control Unit C-2328/GRA-39, the Local Control Unit C-2329/GRA-39, Handset H-189/GR, and carrying Bag CW-598/GRA-39 (a bag and a carrying sling).

NOTE: The AN/GRA-39 is not issued with the AN/PRC-104A.

- Disconnect the H-250/U handset control cable from the upper AUDIO connector on the receiver/transmitter.
- Connect the control cable of the local unit, the C-2329/GRA-39, to the upper AUDIO connector of the receiver/transmitter.
- Connect the H-250/U control cable to the AUDIO connector on Local Control Unit C-2329/GRA-39.
- The remote unit C-2328/GRA-39 may be up to two miles from the radio set. It is connected to the line terminals of the local unit by 600 ohm wire that is connected to the line terminals of the remote unit.

  NOTE: Any wire may be connected to any line terminal on the local and remote control units.
- Connect the control cable of the Handset H-189/GR, supplied with the AN/GRA-39, to the audio jack of the Remote Control Unit C-2328/GRA-39.

f. Voice communications can be received and transmitted through the radio set and can be controlled either locally or at the option of the operators.

g. The remote unit has a loudspeaker to monitor all received radio signals. The volume is controlled by the VOLUME control knob on the receiver/transmitter.

Radio Set AN/PRC-104A

Stopping Procedures

- Turn the OFF/MAX/VOLUME switch to OFF.

Radio Set AN/PRC-104A

Disassemble and Transport Procedures

To disassemble and transport the radio set—

- Turn power off.
- Remove the antenna and antenna shock mount (base) from the radio set.
- Remove the antenna shock mount (base) from the antenna and place the base in the space provided in the transit case.
- Start at the tip (top end), fold the seven-section antenna, and place it in the transit case.
- Remove the handset and place it in the transit case.
- Remove the battery pack from the receiver/transmitter-amplifier/coupler. Put the battery pack in the transit case. Remove batteries from the battery case and transport them separately.

WARNING

Only battery packs that are not activatad may be placed in the transit casa. An activated battery pack must be transported and stored separately.

- Place the receiver/transmitter-amplifier/coupler combination into the transit case.
- Replace the transit case cover, and fasten the four latches.

NOTE: The radio set is now ready for transport or storage.

Radio Set AN/PRC-104A

Operator Daily and Weekly PMCS

a. The operator must perform daily and weekly PMCS. Although it is not specifically a part of daily or weekly PMCS, the radio set must be cleaned. PMCS keeps the radio set operational; keeping the radio set clean is just as important.

b. Clean the radio set when needed by—

- Removing dirt, dust, grease, or other debris from external surfaces using a cloth or brush moistened in clear water. Dry the equipment with a soft, lint-free cloth.
- Cleaning any dust or dirt from the connectors and pins with a soft-bristled brush.

c. Check for corrosion or fungus on the radio set when preparing it for operation or when you are operating it. During PMCS, separate the three units if they are installed. Also, check the exterior surface controls and connectors for signs of corrosion or fungus. Remove corrosion or fungus with a cloth and/or brush moistened in cleaning solvent. Repaint any surfaces that need painting.

d. The following pages discuss the daily and weekly PMCS. The operator performs daily PMCS when the equipment is operated. The operator performs weekly PMCS when the equipment is not operated daily. However, daily PMCS also is performed whenever weekly PMCS is performed. When performing PMCS, report items that are broken or damaged beyond repair to the next higher maintenance level. Any deficiencies you cannot correct must be reported on DA Form 2404.

WHEN PERFORMED	ITEMS TO BE CHECKED	PROCEDURE
Daily	Completeness	Check to ensure the radio set is complete and all hardware is present and properly fastened.
Daily	Exterior surface	Remove dirt, dust, or other debris.
Daily	Controls	Check all controls for proper mechanical action. Refer to higher level maintenance as required.
Daily	Battery	Check battery pack for leakage or corrosion. Clean or replace as required.
Daily	Operation	Perform initial checkout.
Weekly	Battery condition	Remove battery pack cover, and check for corrosion or leakage. Clean or replace as required.
Weekly	Connectors	Check all connectors for debris, damage, and corrosion. Clean or refer to higher level maintenance as required.
Weekly	Antennas	Check for broken or damaged elements. Check for corrosion, dirt, or other debris. Clean, repair, or replace as required.

NOTE: Perform operator PMCS before, during, and after operations as appropriate with the checks or services to be performed. (See Figure 1-19.)

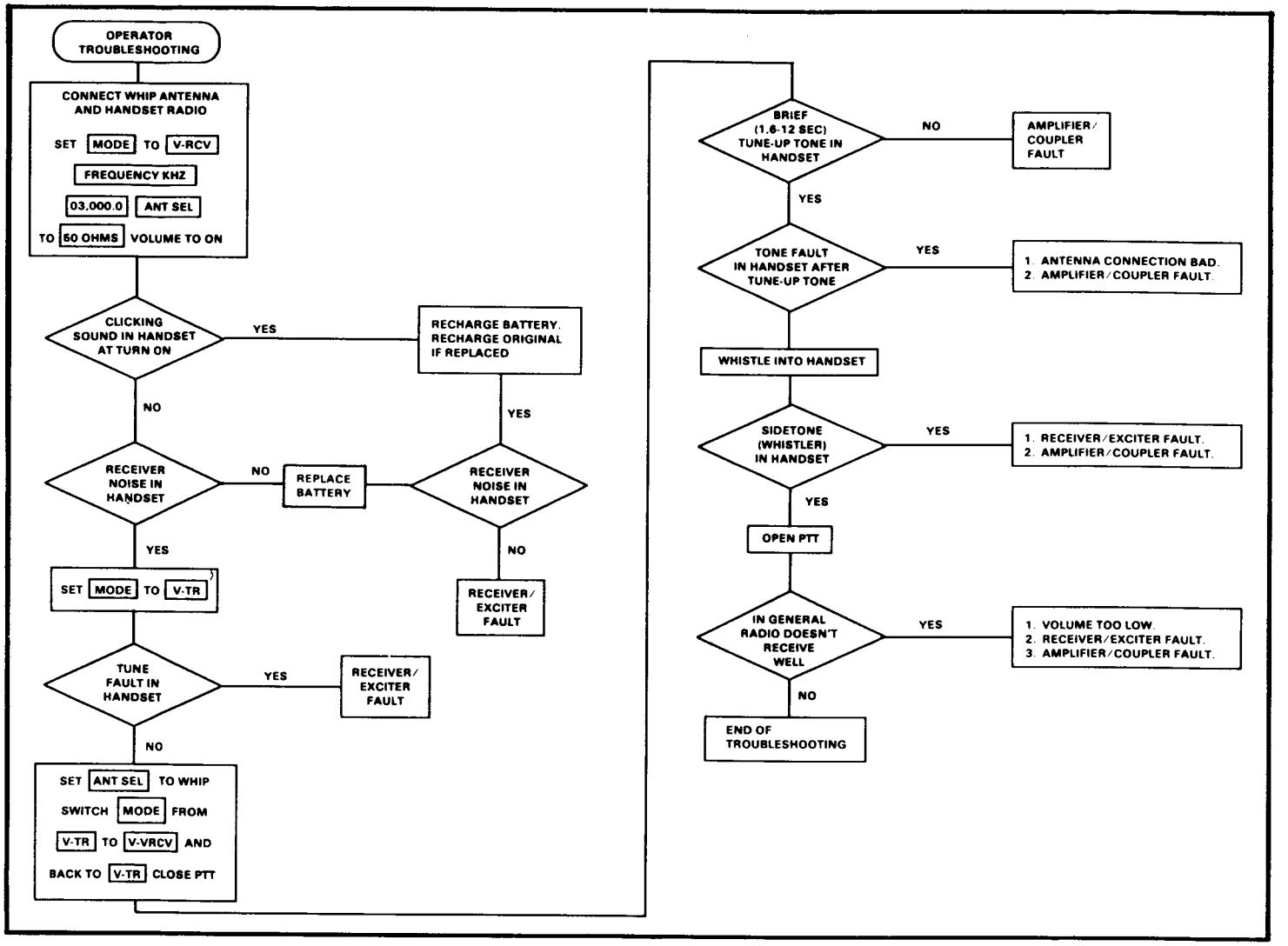

Figure 1-19. Operator troubleshooting flowchart for Radio Set AN/VRC-104A.

Section XV. Radio Set AN/GRC-213

Description

a. The AN/GRC-213 is a lightweight (50 pounds), low power (20-watt) output, HF radio set capable of short- to long-range communications. It uses the same receiver-transmitter (RT-1209/URC) as the AN/PRC-104A, but has no battery pack. It operates from the vehicle power supply using amplifier/power supply AM-7152/GRC-213 to filter and condition the vehicle power for the radio set. The amplifier/power supply also amplifies and squelches (cut out the rushing noise) the audio output to drive an external speaker and provides connection for an AIN/VIC-l.

b. The radio set can be mounted in a wheeled or tracked vehicle, or installed in a fixed location, such as a building or tent. When installed in a fixed location, a power supply capable of providing 24 to 32 volts DC (26.5 VDC nominal) must be used (for example, Generator Set 3 kW, 29 VDC, or Battery Charger PP-1451/G or similar power supply). In vehicles equipped with the Intercommunications Set (Intercom) AN/VIC-1, automatic retransmission is possible from any single sideband radio, such as the AN/GRC-213, to any FM radio, such as the AN/VRC-12 series (Figure 1-20).

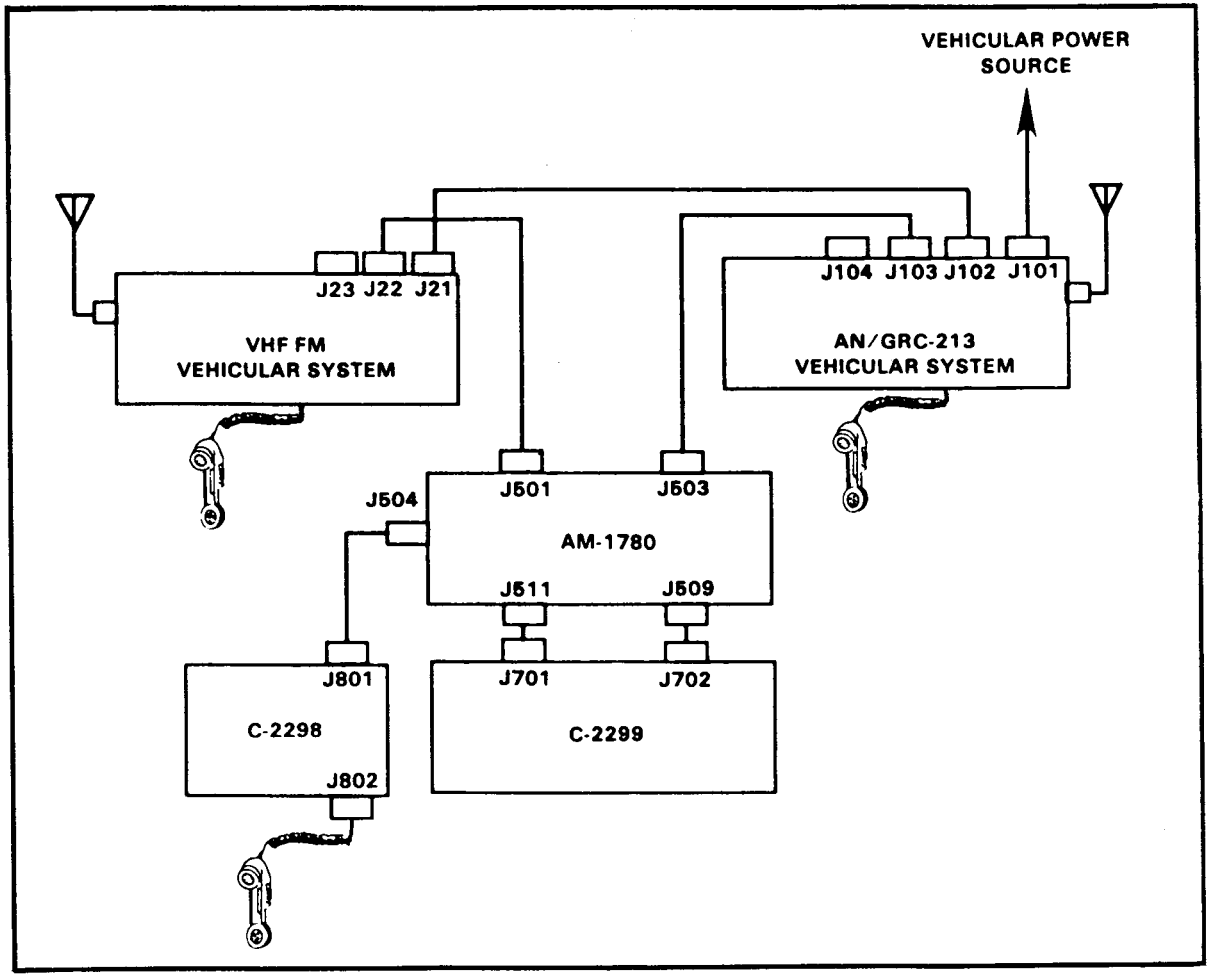

Figure 1-20. Cabling diagram for retransmission operation.

Radio Set AN/GRC-213

Installation Procedures

a. Before operating Radio Set AN/GRC-213, check to make sure it is properly installed in the mount. Ensure it is grounded and has an antenna connected to it.

b. Connections for grounding the radio set to the mount are at the rear of the radio set. Quick connect ground straps connect the components together and ground the radio set to the mount. Make sure the ground straps are connected properly to provide a proper ground. Do not depend on the metal to metal contact between the components to ground the radio set. When operating from a stationary position, connect a ground strap between the vehicle and a ground rod that has been driven into the ground. This will prevent electrical shock when touching the vehicle. (Refer to TC 11-6 for proper grounding techniques.)

c. The AN/GRC-213 uses any antenna designed for HF communications. The most common are the 15-foot whip antenna, the half-wave (doublet) antenna, the quarter-wave antenna and the NVIS antenna. Refer to Chapter 3 for a list of the characteristics of these antennas.

d. Before operating your radio, ensure an antenna is installed and connected to the radio set. Operating a radio with no antenna may cause serious damage to the equipment. When using the whip antenna, be sure the correct number of sections are installed (normally five each, three-foot sections).

Radio Set AN/GRC-213

Operating Procedures

- Turn MODE switch to V-TR.
- Turn SIDEBAND switch to USB or LSB (see SOI).
- Set FREQUENCY to your net operating frequency (see SOI).
- Turn ANT SEL switch to MIDDLE (BNC connector) position.
- Turn VOLUME control to desired listening level. Power is applied at this time through the VOLUME control.

NOTE: A clicking sound indicates low vehicle battery voltage (20 volts or less). The vehicle should be running during operation of the AN/GRC-213 to prevent draining the vehicle's battery. Before starting the vehicle, be sure the radio is off to prevent damage to the radio.

- Momentarily press and release the handset PTT switch.
- Listen for a 1-kHz tune tone. Tuning is brief. It may be 3 to 12 seconds.

NOTE: Tune tone should terminate within 12 seconds. This indicates the radio is tuned and ready for operation. A continuous, rapid beeping in the handset indicates the radio has failed to tune properly (a tune fault exists). Refer to the troubleshooting procedures or to organization maintenance.

To communicate with the AN/GRC-213–

- Press the handset PTT switch, and speak into the mouthpiece of the handset. Release the PTT switch to listen (receive) to the other station.
- Press to transmit, and release to listen.
- Listen for sidetone in the handset earpiece. Sidetone indicates you are transmitting.

- Adjust the SQUELCH control on the amplifier/power supply to allow the distant stations to be heard when they transmit and to eliminate the background noise.

CAUTION

Always listen before pressing the PTT switch to prevent interfering with another station that may be transmitting.

Radio Set AN/GRC-213

Preoperational Checks

STEP	UNIT	CONTROL OR SWITCH	POSITION OR ACTION
1	Power Source	Vehicle, generator or power supply	OFF
2	AN/GRC-213	Grounding	Inspect for adequate ground
		DANGER **To prevent electrical shock when operating the radio set while the vehicle is stationary, the vehicle and radio set must be grounded IAW procedures in TC 11-6.**	
		Antenna system	Inspect
		Cabling	Inspect to ensure cables are installed correctly

Radio Set AN/GRC-213

Presets

STEP	UNIT	CONTROL OR SWITCH	POSITION OR ACTION
1	Receiver/ Transmitter RT-1209/ URC	OFF/MAX/VOLUME switch	OFF
		MODE SELECTOR switch	V-TR
		SB SELECTOR switch	To USB or LSB
		FREQ SELECTOR push buttons	Set operating frequency
2	Amplifier/ Coupler AM-6874/ PRC-104	ANT SEL switch	To MIDDLE (BNC connector for vehicle whip antenna) position
3	Power Amplifier Supply AM-7152/ GRC-213	PWR ON/OFF switch	OFF
4	Antenna Switching Unit SA-2356	ANT LOADING switch	Appropriate position depending on antenna being used

Radio Set AN/GRC-213

Energizing Procedures

STEP	UNIT	CONTROL OR SWITCH	POSITION OR ACTION
1	Power Supply or Generator	Circuit breakers	ON (adjust for 26.5 VDC)
	Vehicle	IGNITION switch	Start engine and adjust throttle
2	Power Amplifier Supply AM-7152/ GRC-213	PWR ON/OFF switch	ON (POWER INDICATOR lamp lights)
		SQUELCH OFF/MAX switch	MIDWAY
		SPEAKER ON/OFF switch	ON (if using speaker)
3	Receiver/ Transmitter RT-1092/ URC	OFF/MAX VOLUME switch	ON (adjust to a comfortable listening level)

Radio Set AN/GRC-213

Tuning Procedures

STEP	UNIT	CONTROL OR SWITCH	POSITION OR ACTION
1	Receiver/ Transmitter RT-1209/ URC	Handset PTT switch	Press and release

NOTE: Tuning tone will be heard in handset. The radio set will tune automatically. This will take about 3 seconds. The radio set is then ready for operation.

Radio Set AN/GRC-213

Stopping Procedures

STEP	UNIT	CONTROL OR SWITCH	POSITION OR ACTION
1	Receiver/ Transmitter RT-1209/ URC	OFF/MAX VOLUME switch	OFF
		FREQ SELECTOR push buttons	ZEROIZE
2	Power Amplifier Supply	PWR ON/OFF switch	OFF

STEP	UNIT	CONTROL OR SWITCH	POSITION OR ACTION
	AM-7152/ GRC-213		
3	Power Supply or Generator	Circuit breaker	OFF
	Vehicle	Throttle	PUSH IN
		IGNITION switch	OFF

NOTE: When stopping procedures are implemented and the radio is to be left unattended, the frequency should be removed from the radio dial to avoid compromising the frequency.

Radio Set AN/GRC-213

Modes of Operation

STEP	UNIT	CONTROL OR SWITCH	POSITION OR ACTION
VOICE			
1	Receiver/ Transmitter RT-1209/ URC	MODE SELECTOR switch	V-TR
		OFF/MAX/VOLUME switch	Adjust to comfortable listening level

STEP	UNIT	CONTROL OR SWITCH	POSITION OR ACTION
2	Power Amplifier Supply AM-7152/ GRC-213	SQUELCH CONTROL switch	Adjust for elimination of background noise
3	Handset H-250/189	PUSH-TO-TALK switch	Press to send release to receive
CONTINUOUS WAVE (CW)			
1	Receiver/ Transmitter RT-1209/ URC	MODE SELECTOR switch	V-TR
		OFF/MAX/VOLUME switch	Adjust for comfortable listening level
2	Telegraph Key KY-872	KEY CONTROL lever	Operate by alternately pressing and releasing

REMOTE OPERATION

NOTE: The procedures for remote operation of Radio Set AN/GRC-213 are the same as for Radio Set AN/PRC-104A. See section on remote operation for Radio Set AN/PRC-104A in this manual.

Radio Set AN/GRC-213

Operator Daily and Weekly PMCS

a. The operator must perform daily and weekly PMCS. Although it is not specifically a part of daily or weekly PMCS, the radio set must be cleaned. PMCS keeps the radio set operational; keeping the radio set clean is just as important.

b. Clean the radio set when needed by—

- Removing dirt, dust, grease, or other debris from external surfaces using a cloth or brush moistened in clear water. Dry the equipment with a soft, lint-free cloth.
- Cleaning any dust or dirt from the connectors and pins with a soft-bristled brush.

c. Check for corrosion or fungus on the radio set when preparing it for operation or when you are operating it. During PMCS, separate the three units if they are installed. Also, check the exterior surface controls and connectors for signs of corrosion or fungus. Remove corrosion or fungus with a cloth and/or brush moistened in cleaning solvent. Repaint any surfaces that need painting.

d. The following pages discuss the daily and weekly PMCS. The operator performs daily PMCS when the equipment is operated. The operator performs weekly PMCS when the equipment is not operated daily. However, daily PMCS also is performed whenever weekly PMCS is performed. When performing PMCS, report items that are broken or damaged beyond repair to the next higher maintenance level. Any deficiencies you cannot correct must be reported on DA Form 2404.

Radio Set AN/GRC-213

Operator Daily and Weekly PMCS (continued)

WHEN PERFORMED	ITEMS TO BE CHECKED	PROCEDURE
Daily	Completeness	Check to ensure the radio set is complete and all hardware is present and properly fastened.
Daily	Exterior surface	Remove dirt, dust, or other debris.
Daily	Controls	Check all controls for proper mechanical action. Refer to higher level maintenance as required.
Daily	Battery	Check battery pack for leakage or corrosion. Clean or replace as required.
Daily	Operation	Perform initial checkout.
Weekly	Battery condition	Remove battery pack cover, and check for corrosion or leakage. Clean or replace as required.
Weekly	Connectors	Check all connectors for debris, damage, and corrosion. Clean or refer to higher level maintenance as required.
Weekly	Antennas	Check for broken or damaged elements. Check for corrosion, dirt, or other debris. Clean, repair, or replace as required.

NOTE: Operator PMCS should be performed before, during, and after operations as appropriate with the checks or services to be performed.

Radio Set AN/GRC-213

Operetor Troubleshooting

Operator troubleshooting of the radio set is limited to fault isolation to a replaceable unit or accessory. Use the operational indicators and audible tones in the handset to isolate faults. The following table is an equipment performance check (EPC). If a component is not performing as indicated in the performance test, a higher level of maintenance is required. Use this performance test as a troubleshooting guide.

Radio Set AN/GRC-213

Equipment Performance Check (EPC)

Presets

1. FREQUENCY kHz switches to 05,000.0 kHz or multiple.
2. MODE switch to V-RCV.
3. SB switch to USB.
4. VOLUME control to OFF.
5. ANT SEL switch to middle position for vehicle whip, or bottom position for dipole or NVIS.
6. SPEAKER switch to OFF.
7. SQUELCH control to OFF.

STEP	FUNCTION	ACTION	NORMAL INDICATION
1	Power	Turn PWR switch on, turn lens on power lamp counterclockwise.	Power lamp lights.

STE.	FUNCTION	ACTION	NORMAL INDICATION
2	Power	Press LIGHT switch.	FREQUENCY kHz windows light.
3	Power	Turn VOLUME control to MID-RANGE.	Receive noise is heard.
4	Receive	Adjust volume, set SPEAKER switch ON.	Receive noise is heard. Signal is heard in loudspeaker and handset.
5	Volume	Adjust VOLUME control.	Signal level changes.
6	SQUELCH control	Adjust SQUELCH control until receive noise is quieted, but station is heard.	Receive noise is quieted, but station is heard.
7	Sideband	Set SB switch to LSB, and monitor the station for clarity. Return switch to USB.	Received signal is clear.
8	Keying	Set MODE switch to V-TR, and change frequency to net or test frequency authorized. Momentarily press PTT and release.	Steady 1-kHz tune tone is heard for 3 to 12 seconds. Receive noise returns.

STEP	FUNCTION	ACTION	NORMAL INDICATION
9	Transmit signal	Press and hold PTT while speaking into microphone.	Sidetone is heard in handset. Nothing is heard in speaker.
10	RT transmit	Press PTT and talk to net or distant test station.	Establish communication with distant station.
11	Shutdown	Turn PWR switch OFF.	Power is removed.

NOTE: Except for steps 1 and 6, this EPC applies to AN/PRC-104.

Section XVI. Radio Set AN/GRC-193A

Description

a. The AN/GRC-193A is a rugged, tactical, vehicular/base station, HF radio set. The set's high power (100 to 400 watts) makes it capable of long-range communications. It uses the same Receiver/Transmitter RT-1209/URC as the AN/PRC-104A and the AN/GRC-213. It operates from the vehicle power supply. The Amplifier/Converter AM-6879 squelches the audio output to drive an external speaker. The radio set can be mourited in a wheeled or tracked vehicle; it can also be installed in a fixed location, such as a building or tent. When installed in a fixed location, a power supply capable of providing 24 to 32 volts DC (26.5 VDC nominal) must be used (for example, generator set 3 kW, 28 VDC, or battery charger PP-1451/G or similar power supply).

b. For the most part, the technical characteristics of the radio set are the same as the AN/PRC-104A and the AN/GRC-213. However, the AN/GRC-193A has an additional component, Amplifier/Converter AM-6879/GRC-193A. This component makes it capable of radio teletypewriter operations. Additional equipment not issued with the AN/GRC-193A (for example, AN/UGC-74(*) and TSEC/KG-84A) is needed for radio teletypewriter operations. A tactical antenna remoting kit enhances the operational flexibility of the AN/GRC-193A. The kit allows remoting of the Antenna Coupler CU-2064/193A and the antenna 200 feet from the radio set. For more information, see TM 11-5820-924-13.

Radio Set AN/GRC-193A

Installation Procedures

a. Before operating Radio Set AN/GRC-193A, ensure it is properly installed in the mount. Make sure it is grounded and has an antenna connected to the radio.

b. Attach the ground strap to one of the ground terminals on front of the antenna coupler. The other end is connected to the mount. Install a ground rod and attach one end of a ground strap to the remaining terminal on the antenna coupler and the other end to the ground rod. This will prevent electrical shock when touching the vehicle. (See TC 11-6 for proper grounding techniques.)

c. Before operating the AN/GRC-193A, be sure an antenna has been connected to the radio set. The AN/GRC-193Ais issued with a 15-foot whip antenna and two 50 ohm antenna kits (Doublet Antenna AN/GRA-50 and NVIS AS-2259/GR Antenna).

DANGER

There are 10,000 volts at the antanna tarminal J4 when ueing tha whip antenna or J3 terminal when using the 50 ohm antenna. Do not remove during operation. Extreme caution must be taken to ensure thase terminals are at least 6 inches from nearby objects such as cables, guy wires, brackets or ground leads.

Radio Set AN/GRC-193A

Operating Procedures

- Make preoperational checks.
- Make control presets.
- Turn VOLUME control to desired listening level. Power is applied at this time through the VOLUME control.

  NOTE: A clicking sound indicates low vehicle battery voltage (20 volts or less). Start the vehicle before powering up the radio set. Leave it running while operating the AN/GRC-193A to prevent draining the vehicle's battery power.
- Connect a handset to the UPPER audio receptacle of the RT-1209/URC or the AM-6545/GRC-193A.
- Momentarily press and release the handset PTT switch.
- Listen for a 1-kHz tune tone. Tuning is brief. It may be 3 to 12 seconds.

  NOTE: Tune tone should terminate within 12 seconds. This indicates the radio is tuned and ready for operation. A continuous, rapid beeping in the handset indicates failure of the radio to properly tune (a tune fault exists). Refer to the troubleshooting procedures or to organization maintenance.

To communicate with the AN/GRC-193A–

- Press the handset PTT switch, and speak into the mouthpiece of the handset. Release the PTT switch to listen (receive) the other station.
- Press to transmit, and release to listen.
- Listen for sidetone in the handset earpiece. Sidetone indicates you are transmitting.

- Adjust the SQUELCH control on the amplifier/converter to allow the distant stations to be heard when they transmit and to eliminate the background noise.

CAUTION

Always listen before pressing the PTT switch to prevent interfering with another station that may be transmitting.

Radio Set AN/GRC-193A

Preoperational Checks

STEP	UNIT	CONTROL OR SWITCH	POSITION OR ACTION
1	Power Source	Vehicle, generator or power supply	OFF
2	AN/GRC-193A	Grounding	Inspect for adequate ground

DANGER

To prevent electrical shock when operating the radio set while the vehicle is stationary, ground the vehicle and radio set IAW procedures in TC 11-6.

		Antenna system	Inspect
		Cabling	Inspect to ensure cables are installed correctly

STEP	UNIT	CONTROL OR SWITCH	POSITION OR ACTION
3	Antenna Coupler CU-2064/ GRC-193A and Power Amplifier AM-6545/ GRC-193A	Air intake and exhaust	Inspect to ensure air intake and exhaust vents are clear

Radio Set AN/GRC-193A

Presets

STEP	UNIT	CONTROL OR SWITCH	POSITION OR ACTION
1	Receiver/ Transmitter RT-1209/ URC	OFF/MAX/VOLUME switch	OFF
		MODE SELECTOR switch	V-TR
		SB SELECTOR switch	To USB or LSB
		FREQ SELECTOR push buttons	Set operating frequency
2	Amplifier/ Converter AM-6870/ URC	20/60 MA SELECT switch	20 or 60 MA (not used with VOICE or CW)

STEP	UNIT	CONTROL OR SWITCH	POSITION OR ACTION
		TTY/SPEAKER ON/OFF switch	OFF
		SQUELCH control switch	MID-RANGE
3	Power Amplifier AM-6545/ GRC-193A	ANT CPLR CB	Push to reset, if tripped
		PA CB	Push to reset, if tripped
		400W/100W selector	400 watts
4	Antenna Coupler CU-2064/ GRC-193A	No presets necessary	

Radio Set AN/GRC-193A

Energizing Procedures

STEP	UNIT	CONTROL OR SWITCH	POSITION OR ACTION
1	Vehicle Power Supply or Generator	IGNITION switch	Start engine and adjust throttle
		Circuit breaker	ON (adjust for 26.5 VDC)

STEP	UNIT	CONTROL OR SWITCH	POSITION OR ACTION
2	Receiver/ Transmitter RT-1209/ URC	OFF/MAX/VOLUME switch	Turn to right 1/2 turn
	NOTE: Allow 60 seconds for power amplifier warm-up. Beeping sound will be heard in earpiece of the handset or loudspeaker at this time.		
3	Power Amplifier AM-6545/	Blower Motor Orange TUN light Green RDY light	Will come ON Will come ON Will come ON

NOTE: Green RDY light and Orange TUN light indicate the radio set is ready to be fine tuned.

Radio Set AN/GRC-193A

Tuning Procedures

STEP	UNIT	CONTROL OR SWITCH	POSITION OR ACTION
1	Receiver/ Transmitter RT-1209/ URC	HANDSET PTT switch	Press momentarily
		HANDSET EARPIECE	Tuning tone will sound

STEP	UNIT	CONTROL OR SWITCH	POSITION OR ACTION
2	Power Amplifier	Green XMIT light	Comes ON and stays ON about 6 seconds
		400W/100W selector	400 watts
	Generator		26.5 (VDC)

NOTE 1: After 6 seconds, Green XMIT light goes out, Orange TUN light goes out, and Green RDY light stays ON. Radio is ready for VOICE or CW modes of operation.

NOTE 2: Set power amplifier SELECTOR switch to 400W when tuning with Antenna Coupler CU-2064/193A.

Radio Set AN/GRC-193A

Stopping Procedures

STEP	UNIT	CONTROL OR SWITCH	POSITION OR ACTION
1	Receiver/ Transmitter	FREQ SELECTOR push buttons	ZEROIZE
		OFF/MAX/VOLUME switch	OFF
2	Power Amplifier AM-6545/ GRC-193A	Blower motor Orange TUN light Green RDY light	GOES OFF

STEP	UNIT	CONTROL OR SWITCH	POSITION OR ACTION
3	Power Supply or Generator	Circuit breakers	OFF
	Vehicle	Throttle	PUSH IN
		IGNITION switch	OFF

Radio Set AN/GRC-193A

Modes of Operation

STEP	UNIT	CONTROL OR SWITCH	POSITION OR ACTION
VOICE			
1	Receiver/ Transmitter RT-1209/ URC	MODE SELECTOR switch	V-TR
		OFF/MAX/VOLUME switch	Adjust to comfortable listening level
2	Amplifier/ Converter AM-6545/ GRC-193A	SQUELCH CONTROL switch	Adjust to eliminate background noise

STEP	UNIT	CONTROL OR SWITCH	POSITION OR ACTION
		TTY/SPKR switch	ON for speaker, otherwise OFF
3	Handset H-250/U or H-189/U	PUSH-TO-TALK switch	Press to send release to receive
CONTINUOUS WAVE (CW)			
1	Receiver/ Transmitter RT-1209/ URC	MODE SELECTOR switch	V-TR
		OFF/MAX/VOLUME switch	Adjust for comfortable listening level
2	Telegraph Key KY-872	KEY CONTROL lever	Operate by alternately pressing and releasing
(RADIO TELETYPEWRITER OPERATION)			
1	Receiver/ Transmitter RT-1209/ URC	MODE SELECTOR switch	V-TR
		OFF/MAX/VOLUME switch	MID-RANGE
2	Amplifier/ Converter AM-6545/ GRC-193A	SQUELCH CONTROL switch	Adjust to reduce noise

STEP	UNIT	CONTROL OR SWITCH	POSITION OR ACTION
		TTY SPKR switch	TTY
		SELECT switch	60 MA or 20 MA as required

(REMOTE OPERATIONS)

NOTE: The procedures for remote operation of Radio Set AN/GRC-l 93Aarethe same as for RadioSetsAN/PRC-104A and AN/GRC-213.

(RADIO SILENCE)

NOTE: The procedures for radio silence are the same for all the radios. The MODE switch on the receiver/transmitter is placed in the RCV position. Do not break radio silence without proper authority.

Radio Set AN/GRC-193A

Preventive Maintanance Checks and Sarvices (PMCS)

a. PMCS of the AN/GRC-193A are required to keep the equipment in good operating condition. They include before operation, during operation and after operation checks. If the equipment is operated daily, perform maintenance each day. If the equipment is

maintained in a STANDBY condition (not used), perform PMCS weekly.

DANGER

Before you operate, always keep in mind the cautions and warnings. This equipment can seriously injure or kill if it is not operated safely and properly.

b. The PMCS charts do not list routine checks, such as equipment inventory, cleaning components, checking for frayed and damaged cables, replacing items not in use, checking for loose hardware and safety wires, and corrosion or receptacles and connectors. Do these things any time they need to be done. This is a matter of good preventive maintenance.

B - Before D - During

Item No	Interval B	Interval D	Items to be inspected	Procedure	For readiness reporting equipment is not ready/ available if:
1	*		Exterior surfaces	**WARNING** Do not clean the equipment if the power is on. Clean the exterior surface of the units comprising the AN/GRC-193A.	
2	*		Interca-bling and connec-tors	Check all interconnecting cables and connectors for	Cables have been cut, have cracks and breaks, or the bonding jumper is missing.

B - Before D - During

Item No	Interval B	Interval D	Items to be inspected	Procedure	For readiness reporting equipment is not ready/ available if:
				cracks and breaks. Check to see that the bonding jumper grounds the equipment. Replace cables that have cuts, cracks or broken connectors.	
3	*		Meter face (glass)	Check to see that the meter faces (glass) are not loose or broken.	Glass on AM-6545 or RT-1209 are loose or broken.
4	*		Fuses	Check fuses on AM-6879 for correct value. Check spare for quantity and proper value.	Fuses are not the correct value.
5	*		CU-2064 and AM-6545 fan intake louver.	Ensure there are no items in front and back of the CU-2064 and AM-6545 that will obstruct air flow through the intake louver.	Air is not moving through the intake louver.

B - Before D - During

Item No	Interval B	Interval D	Items to be inspected	Procedure	For readiness reporting equipment is not ready/ available if:
6	*		Rubber seals on AM-6545 circuit breakers.	Check to ensure that the rubber seals on the AM-6545 circuit breakers are not damaged or missing.	Rubber seals are broken or missing.
7		*	Knobs, controls, and switches.	While making the operational checks (item 8), observe that the mechanical action of each knob, switch, and control is smooth and free of external or internal binding.	

WARNING

The following procedure requires the breaking of radio silence. This manual does not authorize the breaking of radio silence imposed by any command. Unauthorized violation of radio silence could result in court martial or possible death from hostile action.

B - Before D - During

Item No	Interval B	Interval D	Items to be inspected	Procedure	For readiness reporting equipment is not ready/ available if:
8		*	Operational check.	Operate the equipment on an authorized frequency to verify its capabilities.	Signals transmitted or received are not clear, or the AN/ GRC-193A will not transmit or receive.

NOTE: If your equipment fails to operate, troubleshoot equipment using the troubleshooting chart that follows in this section. Report any deficiencies using DA Form 2404.

Cleaning

Inspect the exterior of the radio set components. The exterior surfaces should be free of dust, dirt, grease, moisture, fungus, rust, and corrosion. Remove dust, moisture, and loose dirt with a clean soft cloth.

DANGER

Trichloroethane fumes are toxic. Provide thorough ventilation when it ia used. Avoid prolonged or rapeatad breathing of vapor. Do not uae near an open flama or hot surface. Trichloroethane is nonflammable, but heat converts tha fumaa to a highly toxic phoagene gaa. Inhaling tha gaa could result in serious injury or death. Prolongad or repeated akin contact with trichloroethana can causa skin inflammation. When neceaaary, uaa glovas, sleeves, and aprons the solvent cannot penatrata.

Remove grease, fungus, and ground-in dirt from the equipment covers. Use a dampened cloth (but not wet) with trichloroethane.

Remove dust or dirt from plugs and jacks with a brush.

CAUTION

Do not press the glass of the meter on the AM-6545 or the RT-1209 when cleaning.

Clean the meter, front panels, and control knobs. Use a soft clean cloth. If dirt is difficult to remove, dampen the cloth with water. Mild soap may be used for more effective cleaning.

Radio Set AN/GRC-193A

Operator Troubleshooting

Troubleshooting of this equipment is based upon the operational check in the daily operator PMCS. To troubleshoot the equipment, perform an operational check. Proceed through this check until an abnormal condition or result is observed. When an abnormal condition or result is observed, turn to the troubleshooting procedure on the following pages and determine if there is a similar condition in the symptom column. If the corrective measures indicated do not correct the trouble, a higher category of maintenance is required. It is assumed the Amplifier/Converter AM-6879 front panel fuse has been checked by the operator, and the vehicular generating system or external power source is in working order. These items are not listed in the check and corrective measure column of the troubleshooting chart.

Radio Set AN/GRC-193A

Operator Troubleshooting

NOTE: Refer to troubleshooting flowchart in Figure 1-21. HCM means higher category of maintenance.

ITEM NO	SYMPTOM	PROBABLE TROUBLE	CHECK AND CORRECTIVE MEASURE
1	Noise of bandswitching is not heard in the Power Amplifier (AM-6545).	No code from receiver/transmitter (RT-1209). Faulty power amplifier (AM-6545).	Change frequency by 10,000 kHz (do not go outside 2 to 30 MHz). If symptom persists, HCM is required.
2	No noise from handset earpiece.	Handset faulty.	Change handset.
3	No noise from speaker (AM-6879).	Speaker turned off. Squelch set to high (clockwise). Amplifier/ Converter faulty.	Turn speaker on. Turn squelch counterclockwise. HCM required.
4	Clicking sound in handset earpiece.	Low input voltage to radio set.	Adjust input voltage to 26.5 V DC.
5	Fault tone at turn on.	Normal during 1 minute warm-up. Amplifier/ Converter or	HCM required.

ITEM NO	SYMPTOM	PROBABLE TROUBLE	CHECK AND CORRECTIVE MEASURE
		Antenna-Coupler faulty.	
6	No Yellow tune light on AM-6545.	High input voltage to radio set (over 32 VDC).	Adjust input voltage to 26.5 VDC.
		Low input voltage to radio set (below 20 VDC).	Adjust input voltage to 26.5 VDC. Press fan/lamp test push button on the power amplifier. All six lamps should light and the fans in the coupler and power amplifier should be audible.
7	No Green RDY light after 1 minute warm-up.	Faulty power amplifier.	HCM is required.
8	No steady tune signal in the handset or speaker when handset PTT switch is pressed.	Handset inoperative. Speaker turned off. Faulty speaker or AM-6879.	Replace handset. Turn speaker on. HCM required.
9	No Green XMIT lamp	Handset inoperative. Defective	Replace handset. HCM required.

ITEM NO	SYMPTOM	PROBABLE TROUBLE	CHECK AND CORRECTIVE MEASURE
	on AM-6545 when hand-set PTT switch is pressed.	power and control. Defective AM-6545 or AM-6879.	
10	Red FIL FAULT lamp on AM-6545 lights.	Power amplifier tube in the power amplifier is defective.	HCM required.
	NOTE: Operation at reduced power is still possible, but the unit should be turned in to HCM for repair at the first opportunity.		
11	Red PA FAULT lamp on AM-6545 lights.	Faulty power amplifier (AM-6545) or faulty antenna coupler.	HCM required.
		Faulty RF coaxial cable W5.	Check for breaks, cracks, and proper connections.
		Faulty power and control cable W6.	Check for breaks, cracks, and proper connections.
		Faulty HV RF cable (antenna lead-in).	Check for breaks, cracks, and proper connections.
		Antenna not installed	Install antenna. If problem persists HCM is required.

ITEM NO	SYMPTOM	PROBABLE TROUBLE	CHECK AND CORRECTIVE MEASURE
12	RED CPLR FAULT light on AM-6545 lights.	Same as step 11 above.	Same as step 11.
13	AM-6545 internal bandswitch rotates continuously and will not stop.	Faulty power amplifier (AM-6545).	Remove power from radio set. HCM required.
14	Radio set shuts down during operation.	Over temperature condition exists. Radio shuts down if internal temperature reaches 55°C (131°F).	Check to ensure the air intake louvers at front and back of both power amplifier and coupler are not blocked. Remove any obstacles.
	NOTE: When normal tempatures are reached, the units will automatically reset. It will be necessary to go through warm-up and tuning again.		
15	Meter on AM-6545 does not deflect when speaking into handset.	Faulty handset. Faulty power control cable W2. Faulty meter on AM-6545.	Replace handset. Check for proper connections, cracks, or breaks. HCM required.

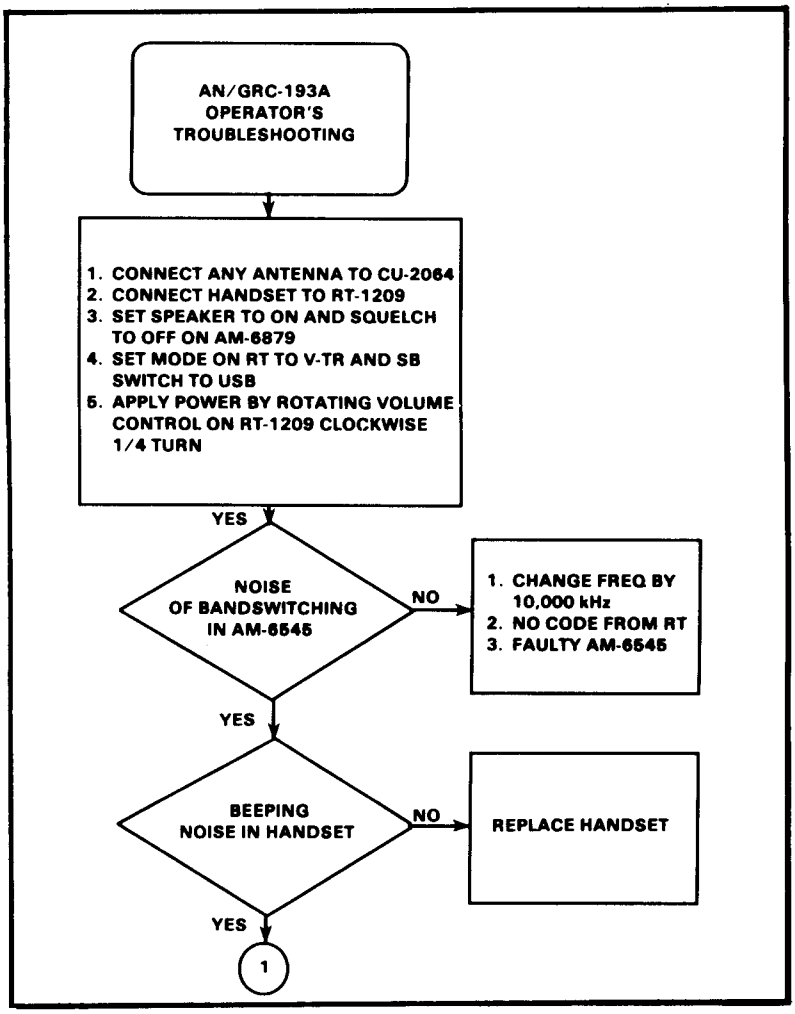

Figure 1-21. Troubleshooting flowchart for Radio Set AN/GRC-193A.

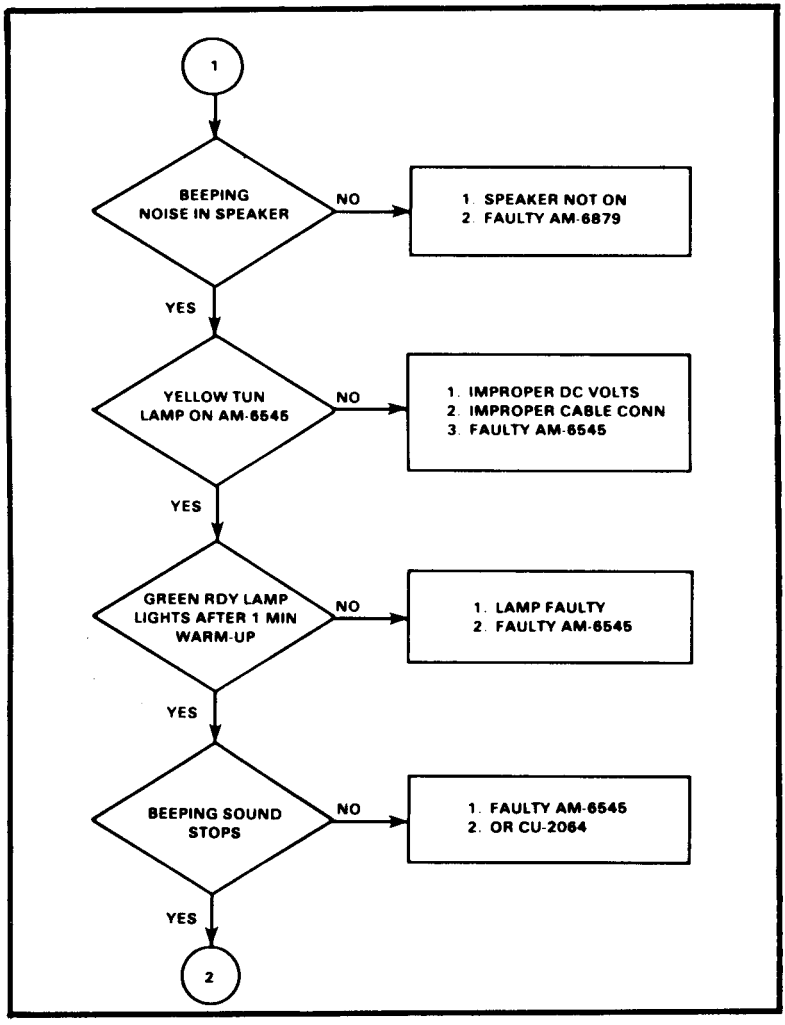

Figure 1-21. Troubleshooting flowchart for Radio Set AN/GRC-193A

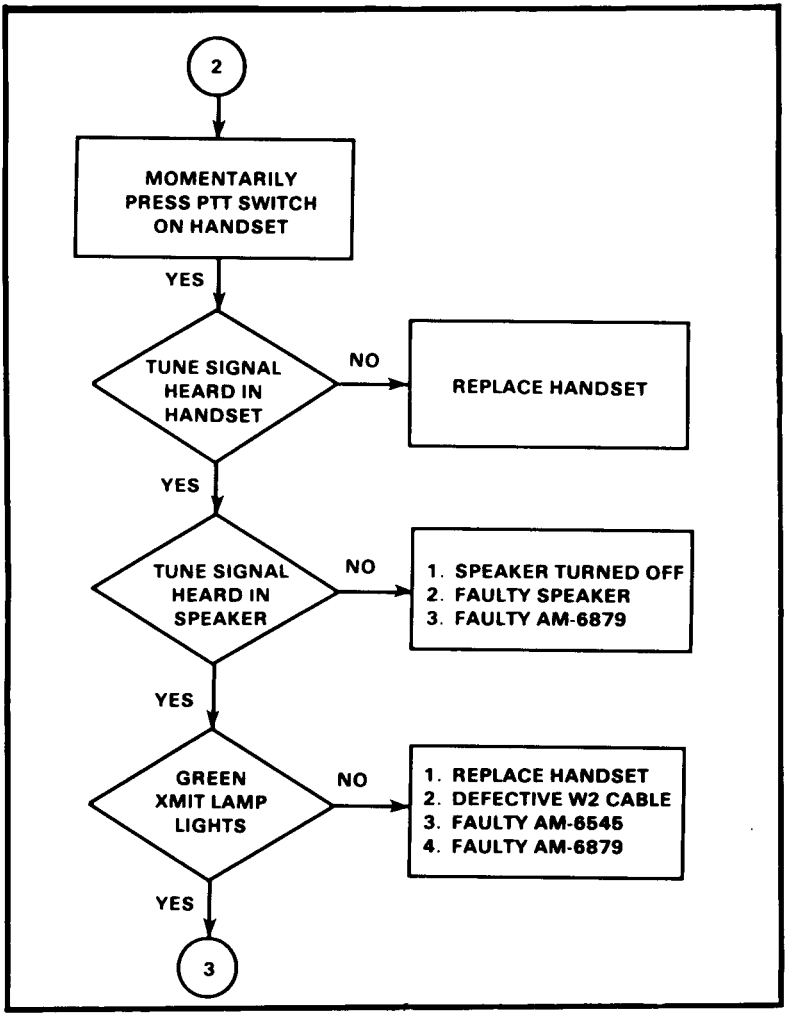

Figure 1-21. Troubleshooting flowchart for Radio Set AN/GRC-193A (continued).

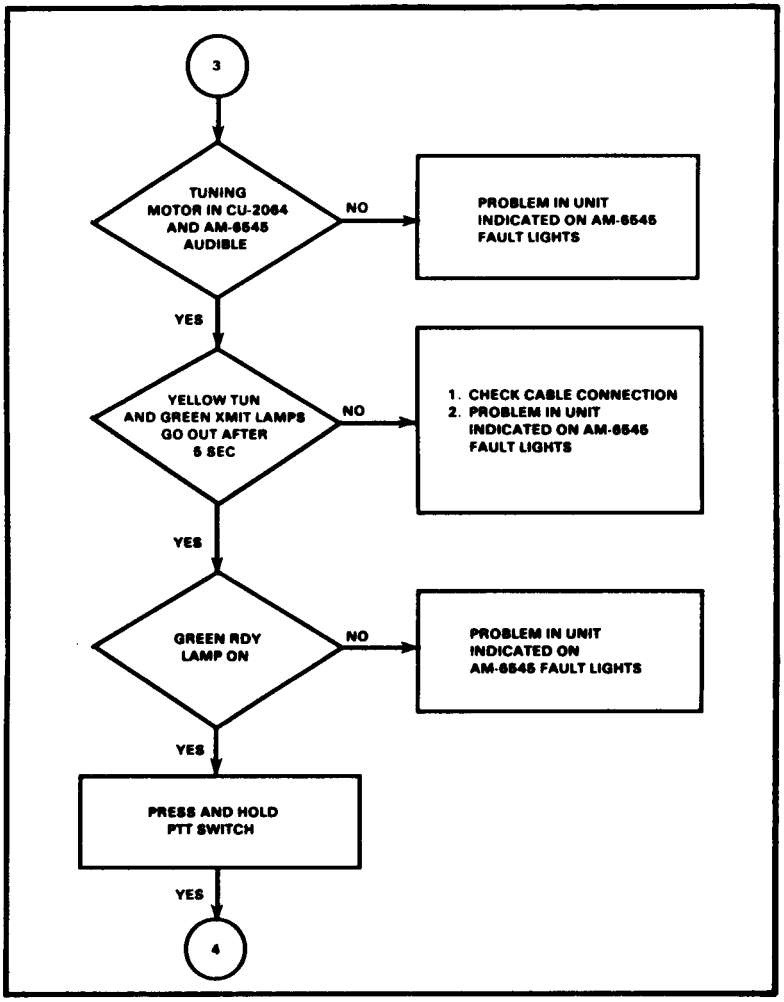
3
TUNING MOTOR IN CU-2064 AND AM-6545 AUDIBLE
NO
PROBLEM IN UNIT INDICATED ON AM-6545 FAULT LIGHTS
YES
YELLOW TUN AND GREEN XMIT LAMPS GO OUT AFTER 5 SEC
NO
1. CHECK CABLE CONNECTION
2. PROBLEM IN UNIT INDICATED ON AM-6545 FAULT LIGHTS
YES
GREEN RDY LAMP ON
NO
PROBLEM IN UNIT INDICATED ON AM-6545 FAULT LIGHTS
YES
PRESS AND HOLD PTT SWITCH
YES
4

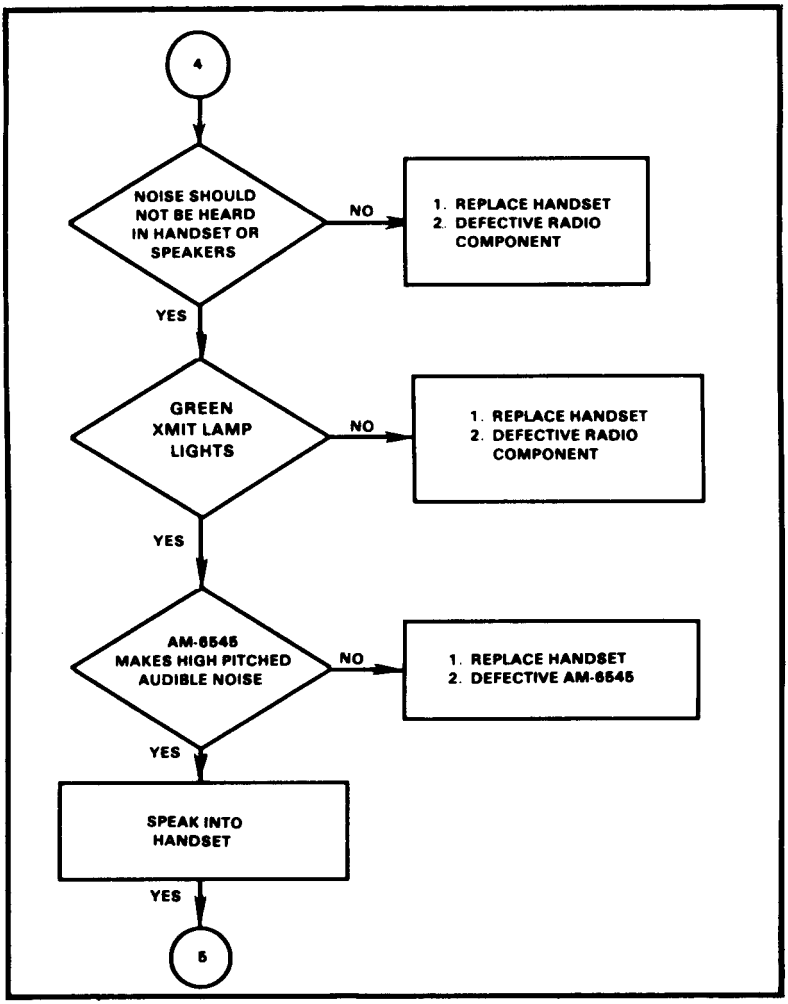

Figure 1-21. Troubleshooting flowchart for Radio Set AN/GRC-193A (continued).

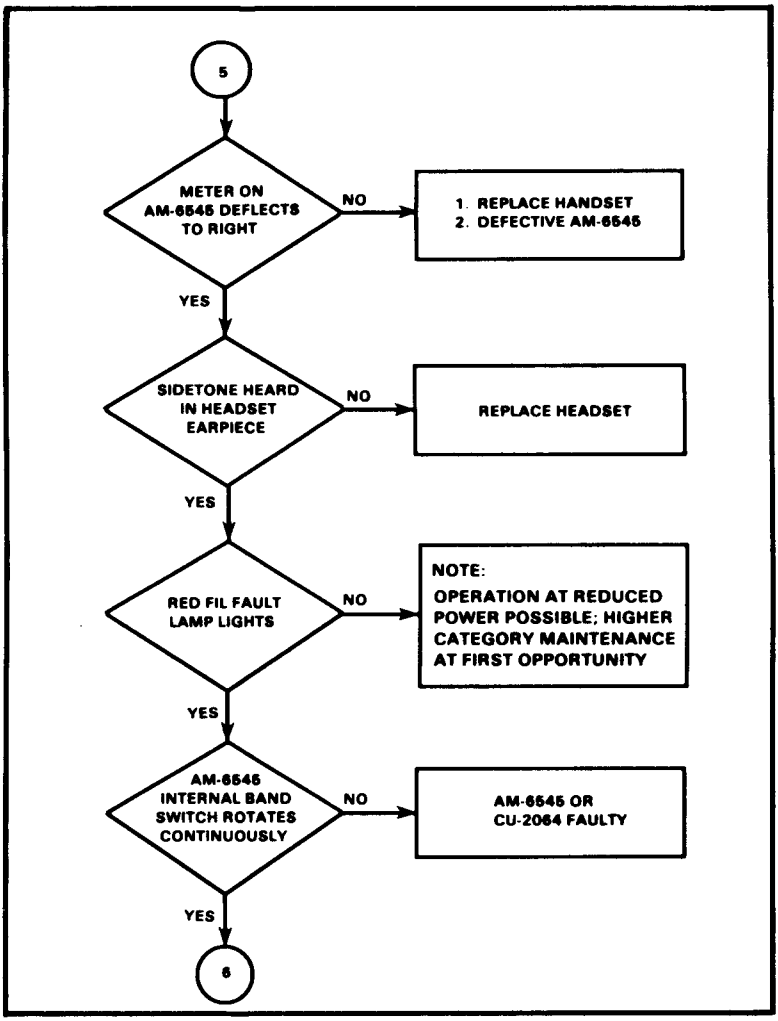

Figure 1-21. Troubleshooting flowchart for Radio Set AN/GRC-193A (continued).

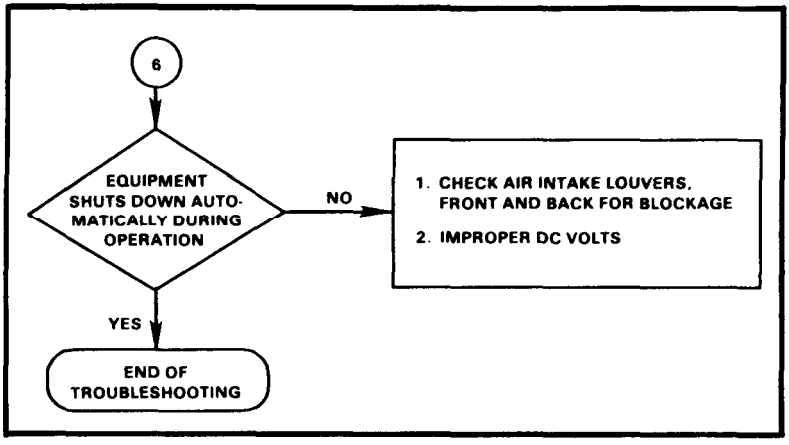

Figure 1-21. Troubleshooting flowchart for Radio Set AN/GRC-193A (continued).

Section XVII. Single-Channel Ground and Airborne Radio System (SINCGARS) and AN/TSC-124 (SCOTT)

SINCGARS

SINCGARS is a new family of VHF-FM combat net radios. SINCGARS is designed to provide the primary means of command and control (voice and digital data up to 16 kb/s) for combat, combat support, and combat service support units. To help the communications system survive, SINCGARS provides a resistance to jam (ECCM) capability using single-channel offset or frequency hopping. SINCGARS also has a built in data adapter to allow transmission of a wide range of analog and digital data signals. Figure 1-22 shows a SINCGARS.

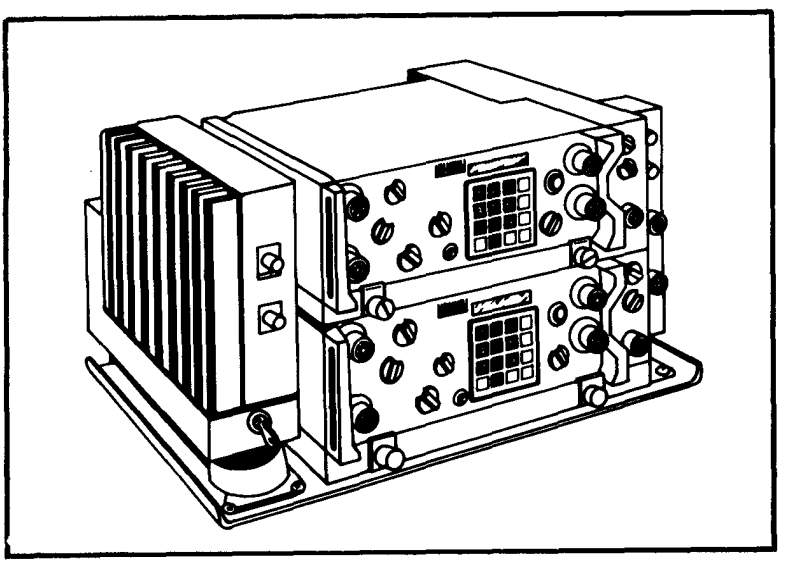

Figure 1-22. SINCGARS radio.

AN/TSC-124 (SCOTT)

a. The AN/TSC-124 is a single-channel, tactical satellite communications terminal. It provides highly survivable, antijam and high altitude electromagnetic pulse-protected (HAEMP) satellite communications for nonstrategic forces, contingency units, special operations units, and theater forces. It will provide critical command and control communications and replace existing terrestrial communications nets. The AN/TSC-124 will survive when the enemy has degraded or destroyed other communications, although voice communications will be possible. (See Figure 1-23.)

b. The AN/TSC-124–

- Consists of the terminal mounted in S-250 shelter, prime mover, and trailer-mounted power generator. Backup power is provided by the prime mover.
- Accepts up to four datdvoice inputs from UCID 2500 feet away from the terminal.
- Operates in both DAMA and TMDA modes.
- Provides electronic ECCM capability.
- Can accept over-the-air rekeying of TRANSEC devices.

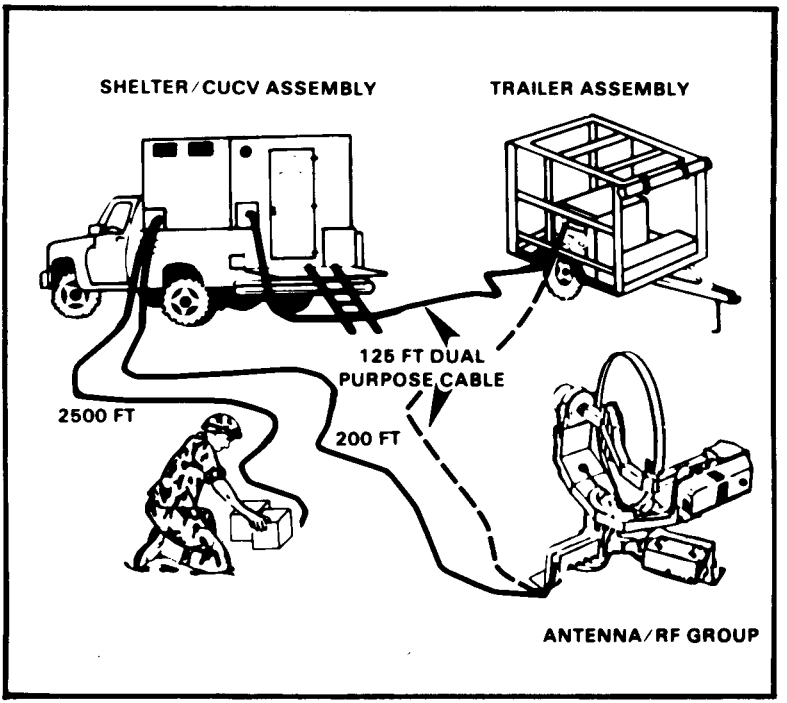

Figure 1-23. SCOTT Terminal AN/TSC-124 (deployed configuration).

Regency Net System

a. The Regency Net System provides survivable HF radio command, control, and communications which pass messages accurately and rapidly for US Commander-in-Chief, Europe and Pacific and internal unit communications within their major subordinate commands. The Regency Net System includes the force terminal which is a multichannel terminal housed in a S-280 shelter and a team terminal which is a single-channel terminal mounted in a ¼-ton vehicle. For the purpose of this manual, only team terminal (Figures 1-24 through 1-26) will be discussed.

b. The AN/GRC-215 team terminal—

- Consists of a single channel 100-watt HF transceiver which is vehicular mountable or manportable.
- Provides secure data and voice communications to assigned force terminals.
- Is compatible with force terminals in all modes except radioteletype.
- Utilizes three microprocessors at data receipt ports to control regency net connectivity, provides radio control, processes messages, and isolates faults.
- Has printer port for intirface with either a force terminal thermal printer or the AN/UGC-144 control terminal.
- Operates on the move or at halt utilizing 12/24 V DC vehicle power.
- Possesses active ECCM.
- Is interoperable with currently fielded single-channel HF radios.

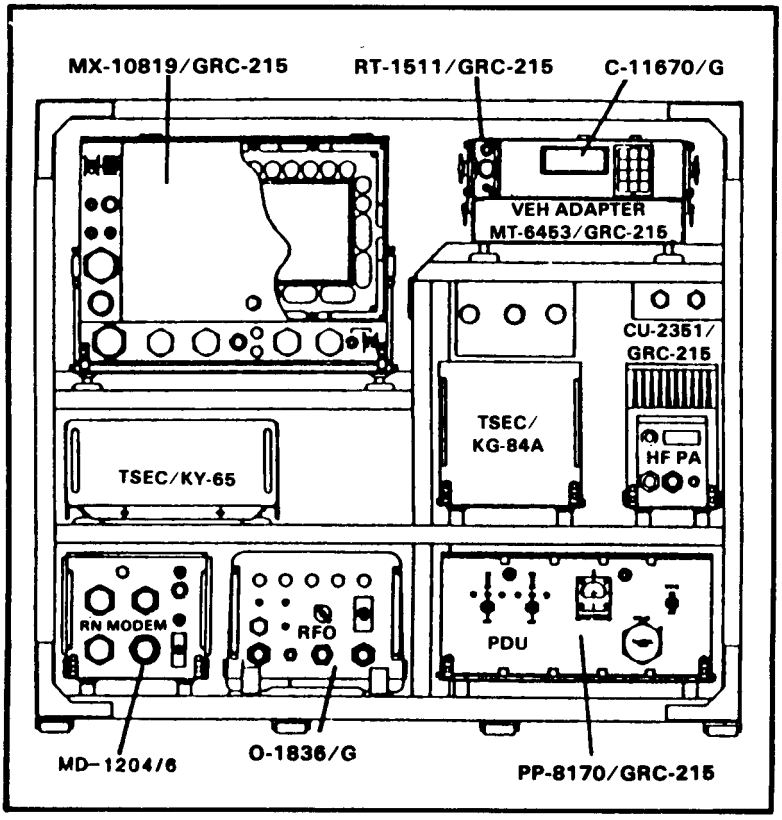

Figure 1-24. AN/GRC-215 team terminal.

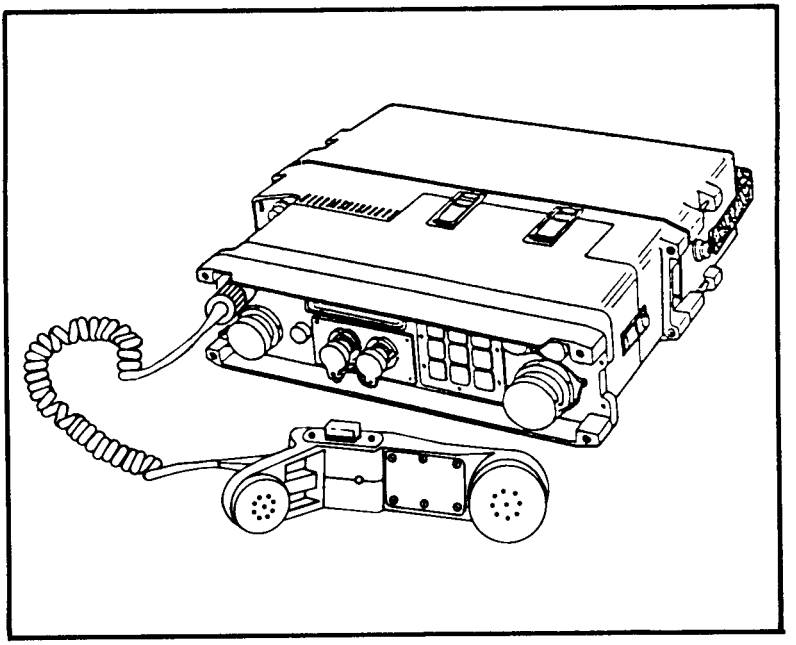

Figure 1-25. AN/GRC-215 manpack.

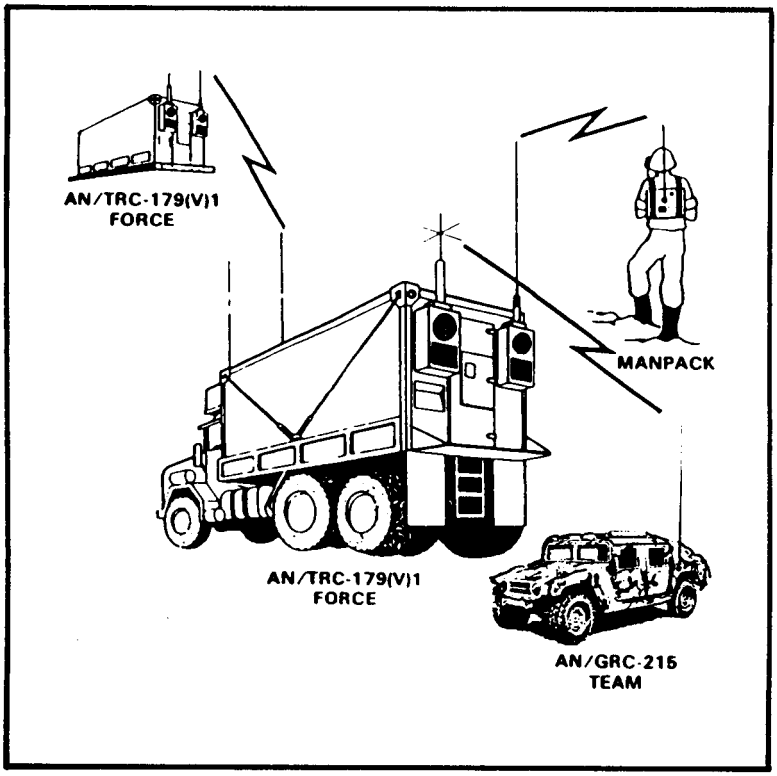

Figure 1-26. AN/GRC-215 and net configuration.

Chapter 2
Generator Sets

Section I. Generator Set 10 kW (PU-619)

Installation Procedures

STEP	ACTION
1	Disconnect trailer from vehicle and position the trailer on the most level surface as possible. For operating efficiency, do not exceed a 15-degree angle.
2	Set brakes and block wheels securely to prevent any movement.
3	Pull rear leg prop down and adjust length for firm contact with ground and lock in place.
	WARNING
	Wheels must be blocked, brakes set, and rear lag prop down in support position before attempting to roll up the tarpaulin and before starting to set up or assemble the equipment for operation.
4	Roll up tarpaulin and remove splash shield.
5	Remove all loose auxiliary items (gas cans, fire extinguishers) or anything that might block the free air circulation through the trailer and around the generator sets.
	CAUTION
	It is extremely important to have free air circulation around the generator sets at all times. Inadequate ventilation is a major cause of damage to the equipment.

6 Ground the set before operation. Drive the ground rod at least 8 feet straight into the ground. Bolt ground wire lead to ground rod and bolt other end to generator ground terminal stud.

DANGER

Do not operate the generator set without a suitable ground connection. Electrical defects in the unit, load lines, or load equipment can cause death by electrocution when contact is made with an ungrounded system.

7 Connect AC power cable for 120-volt, 1-phase, 2-wire to generator set load terminals L2 and L3.

WARNING 1

Ensure circuit breaker is off before connecting cable.

WARNING 2

The 5- and 10-kW generators are not grounded internally. They need a jumper between the frame's grounding lug and the neutral load terminal. Your generator set TM or TB 43-0125 points out the neutral terminal.

This jumper should be at least 6-AWG wire. Order some NSN 6145-00-652-9058. Without it, the power unit is not grounded and you risk equipment damage and noisy circuits.

Figure 2-1 shows the proper hookup for an AN/GRC-122/142 radio teletypewriter set.

If you have a different rig, the hookup should be shown in your operator's manual. If it is not, see TB 43-0125 for instructions to connect primary power to your gear.

Remember, L0 is not a ground. You need the jumper wire to complete the job.

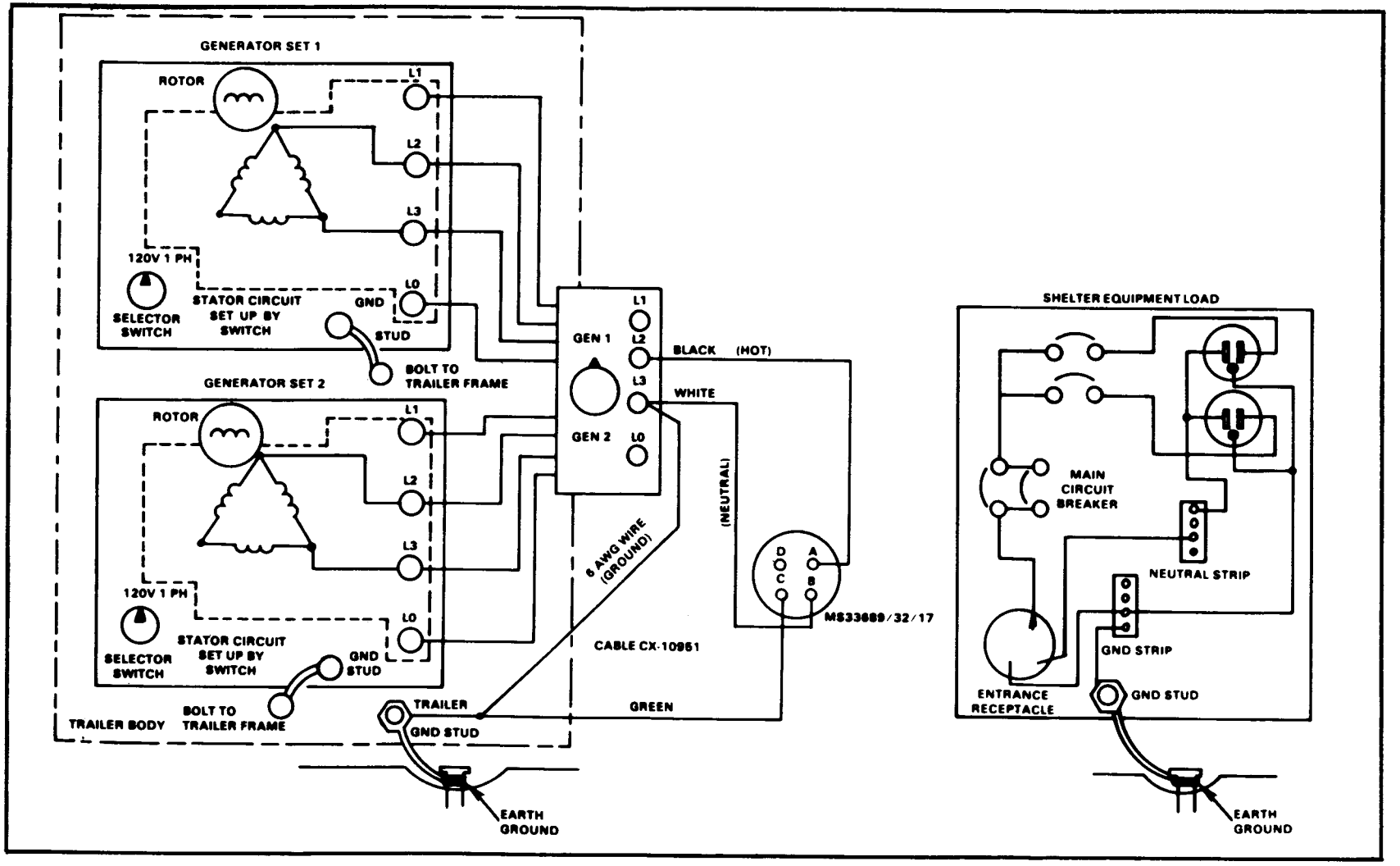

Figure 2-1. Generator hookup for AN/GRC-122/142.

Generator Set 10 kW (PU-619)

Prestart Procedures

STEP	ACTION
1	Ensure generator is grounded and ground connections are secure.
2	Place circuit in OFF position (down).
3	Check oil for proper level and cleanliness. Add oil as indicated by level gauge. Check oil filter for leaks.
4	Check air filter for cleanliness and set air intake shutter as needed. If dirty, replace or clean with air hose. **NOTE:** For operation below 0°F, refer to the engine TM to properly set the air intake shutter and oil pan baffle rod position.
5	Check fuel level. Add fuel as required.
6	Check fuel filter for leaks and sediment in bottom of bowl. Clean bowl if dirty.
7	Check battery cables and mounts for loose connections. Add water, if needed.
8	Check all controls and instruments for defects.
9	Place the THREE-WAY FUEL valve in the SET position.
10	Check tightness and proper connections of the load line on terminals L2 and L3. **NOTE:** Ensure PHASE SELECTOR knob is in the 120-colt, 1-phase position.
11	Turn GENERATOR TRANSFER switch to OFF position.
12	Place LOCAL-REMOTE switch to LOCAL.
13	Set EMERGENCY STOP-RUN switch to NORMAL.
14	Turn VOLTAGE ADJUST knob fully counterclockwise.

15 Set VOLTAGE SELECTOR switch to V2-V3.

16 Set CURRENT SELECTOR switch to I-3.

Generator Set 10 kW (PU-619)

Starting Procedures

STEP	ACTION
1	Place the GOVERNOR control to the GOVERN position.
2	Pull out the CHOKE control.
3	Hold START-STOP switch in START position for a maximum of 15 seconds. If engine does not start, allow a cooling off period of 1 minute before restarting.
4	Check OIL PRESSURE gauge for reading of 20 to 60 psi.
	NOTE: Engine should be placed at ¼-speed for approximately 5 minutes to allow engine to reach operating temperature.
5	Slowly return CHOKE control to its normal position.
6	Check the BATTERY CHARGE indicator for reading on plus side of scale.
7	Adjust GOVERNOR control to obtain 59 to 61 Hz on frequency meter.
8	Turn VOLTAGE INCREASE knob clockwise and observe the voltmeter for a reading of 120 volts.
9	Check CURRENT indicator. Normal reading must not exceed 100 percent.
10	Place circuit breaker in ON position (up).
11	Set the GENERATOR TRANSFER switch to the running generator.
12	Apply power to radio equipment.

Generator Set 10 kW (PU-619)

Stopping Procedures

STEP	ACTION
1	Turn equipment to OFF position.
2	Place TRANSFER switch to OFF position.
3	Place circuit breaker in OFF position (down).
4	Allow engine to run 3 to 5 minutes with no load.
5	Hold STOP-START switch to STOP and release.
6	Close FUEL SELECTOR valve.
7	Place EMERGENCY STOP-RUN switch to EMERGENCY STOP position. **NOTE:** For emergency stopping, immediately place EMERGENCY STOP-RUN switch in EMERGENCY STOP position.
8	Secure the power cable.
9	Perform after-operation checks: a. Fill fuel containers. b. Check oil level. c. Check water level in batteries. d. Make visual inspection of equipment for defects. e. Return fire extinguisher and gas cans to trailer. Secure exhaust pipe, splash guard, ground stake, and tarpaulin.

Section II. Generator Set 5 kW (PU-620)

Prestart Procedures

STEP	ACTION
	NOTE: Follow installation procedures for Generator Set 10 kW (PU-619).
1	Ensure generator is grounded and ground connections are secure.
2	Place circuit breaker in OFF position (down).
3	Check oil for proper level and cleanliness. Add oil as indicated by level gauge. Check oil filter for leaks.
4	Check air filter for cleanliness and set air intake shutter as needed. If dirty, replace or clean with air hose.
	NOTE: For operation below 0°F, refer to the engine TM to properly set the air intake shutter and oil pan baffle rod position.
5	Check fuel level. Add fuel as required.
6	Check fuel filter for leaks and sediment in bottom of bowl. Clean bowl if dirty.
7	Check battery cables and mounts for loose connections. Add water, if needed.
8	Check all controls and instruments for defects.
9	Place the THREE-WAY FUEL valve in the SET position.
10	Check tightness and proper connections of the load line on terminals L2 and L3.
	NOTE: Ensure PHASE SELECTOR knob is in the 120-volt, 1 -phase position.
11	Turn GENERATOR TRANSFER switch to OFF position.
12	Place LOCAL-REMOTE switch to LOCAL.
13	Set EMERGENCY STOP-RUN switch to NORMAL.

Generator Set 5 kW (PU-620)

Prestart Procedures (continued)

STEP	ACTION
14	Turn VOLTAGE ADJUST knob fully counterclockwise.
15	Set VOLTAGE SELECTOR switch to V2-V3.
16	Set CURRENT SELECTOR switch to I-3.

Generator Set 5 kW (PU-620)

Starting Procedures

STEP	ACTION
1	Place the GOVERNOR control to the GOVERN position.
2	Pull out the CHOKE control.
3	Hold START-STOP switch in START position for a maximum of 15 seconds. If engine does not start, allow a cooling off period of 1 minute before restarting.
4	Check OIL PRESSURE gauge for reading of 20 to 60 psi. **NOTE:** Engine should be placed at M-speed for approximately 5 minutes to allow engine to reach operating temperature.
5	Slowly return CHOKE control to its normal position.
6	Check the BATTERY CHARGE indicator for reading on plus side of scale.
7	Adjust GOVERNOR control to obtain 60 Hz on frequency meter.
8	Turn VOLTAGE INCREASE knob clockwise and observe the voltmeter for a reading of 120 volts.

STEP	ACTION
9	Check CURRENT indicator. Normal reading must not exceed 100 percent.
10	Place circuit breaker in ON position (up).
11	Set the GENERATOR TRANSFER switch to the running generator.
12	Apply power to radio equipment.

Generator Set 5 kW (PU-620)

Stopping Procedures

STEP	ACTION
1	Turn equipment to OFF position.
2	Place TRANSFER switch to OFF position.
3	Place circuit breaker in OFF position (down).
4	Allow engine to run 3 to 5 minutes with no load.
5	Hold START-STOP switch to STOP and release.
6	Close FUEL SELECTOR valve.
7	Place EMERGENCY STOP-RUN switch to EMERGENCY STOP position. **NOTE:** For emergency stopping, immediately place EMERGENCY STOP-RUN switch in EMERGENCY STOP position.
8	Secure the power cable.
9	Perform after-operation checks: a. Fill fuel containers. b. Check oil level.

STEP	UNIT	ACTION
		c. Check water level in batteries.
		d. Make visual inspection of equipment for defects.
		e. Return fire extinguisher and gas cans to trailer. Secure exhaust pipe, splash guard, ground stake, and tarpaulin.

Section III. Generator Set 3 kW (MEP-026A)

Installation Procedures

STEP	ACTION
1	Disconnect trailer from vehicle and position trailer on the most level surface as possible. For operating efficiency, do not exceed a 15-degree angle.
2	Set brakes and block wheels securely to prevent any movement.
3	Pull rear leg prop down and adjust length for firm contact with ground and lock in place.
	WARNING
	Wheels must be blocked, brakes set, and rear leg prop down in support position before attempting to roll up the tarpaulin and before starting to set up or assemble the equipment for operation.
4	Roll up tarpaulin and remove splash shield.

STEP	UNIT	ACTION
5		Remove all loose auxiliary items (gas cans, fire extinguishers) or anything that might block the free air circulation through the trailer and around the generator sets.
		CAUTION
		It is extremely important to have free air circulation around the generator sets at all times. Inadequate ventilation is a major cause of damage to the equipment.
6		Ground the set before operation. Drive the ground rod at least 8 feet straight into the ground. Bolt ground wire lead to ground rod and bolt other end to generator ground terminal stud.
		DANGER
		Do not operate the generator set without a suitable ground connection. Electrical defects in the unit, load lines, or load equipment can cause death by electrocution when contact is made with an ungrounded system.
7		Connect load cables between radio equipment and generator. Be sure to observe polarity of load terminals when interconnecting.

Generator Set 3 kW (MEP-026A)

Prestart Procedures

STEP	ACTION
1	Ensure generator is grounded and ground connections are secure.
2	Place the circuit in OFF position (down).

STEP	ACTION
3	Check oil for proper level and cleanliness. Add oil as indicated by level gauge. Check oil filter for leaks.
4	Check air filter for cleanliness and set air intake shutter as needed.
5	Check fuel level. Add fuel as required.
6	Check fuel filter for leaks and sediment in bottom of bowl. Clean bowl if dirty.
7	Check battery cables and mounts for loose connections. Add water if needed.
8	Check all controls and instruments for defects.
9	Set FUEL SELECTOR valve to OFF.
10	Check the load connections for tightness and proper connection.
11	Place OFF-RUN switch to OFF position.
12	Turn VARIABLE RESISTOR knob (increase voltage) all the way to the left (fully counterclockwise).

Generator Set 3 kW (MEP-026A)

Electrical Starting Procedures

STEP	ACTION
1	Connect 24/28-volt external power source to receptacle.
2	Turn VOLTAGE INCREASE knob fully counterclockwise.
3	Place circuit breaker in OFF position (down).
4	Place FUEL SELECTOR valve to SET TANK or AUX TANK, depending on fuel source.

STEP	ACTION
5	Place AIR INTAKE shutter in the SUMMER position for temperatures above 32°F (0°C) and WINTER position for temperatures below 32°F (0°C).
6	Place GOVERNOR control in START AND IDLE position.
7	Close choke with CHOKE control.
8	Place IGNITION switch to RUN position.
9	Hold START-STOP switch in START position for a maximum of 15 seconds. If engine does not start, allow a cooling off period of 1 minute before restarting.
10	Place GOVERNOR control in GOVERN position.
11	Gradually open choke with CHOKE control as engine attains operating temperature.
12	Once engine attains operating temperature, switch circuit breaker to the ON position.

Generator Set 3 kW (MEP-026A)

Manual Starting Procedures

STEP	ACTION
1	Place the FUEL SELECTOR valve to SET TANK.
2	Place GOVERNOR control to CENTER position of travel movement.
3	Place CARBURETOR CHOKE lever to CHOKE position.
4	Set IGNITION switch to RUN position.
5	Start generator with starter rope.
6	Adjust CHOKE lever until engine is running smoothly.

STEP	UNIT	ACTION
7		Set GOVERNOR control to the FULLY OPEN position.
8		Check tachometer for red line reading indicating the desired 3600 RPM.
9		Adjust VOLTAGE INCREASE knob to 28-volts maximum on the DC voltmeter. If no voltage reading, actuate FIELD FLASH switch momentarily.
10		Place circuit breaker in ON position (up).
11		Check voltmeter; adjust as necessary.
12		Check load meter. Load meter must not exceed 100 percent.

Generator Set 3 kW (MEP-026A)

Stopping Procedures

STEP	ACTION
1	Turn equipment to OFF position.
2	Place circuit breaker in OFF position (down).
3	Turn the VOLTAGE INCREASE knob fully counterclockwise (to left).
4	Set GOVERNOR control all the way forward and allow engine to run for 2 minutes.
5	Place IGNITION switch in OFF position (to the right).
6	Place FUEL SELECTOR valve left or down to OFF position.
7	Perform after-operation checks: a. Fill fuel containers. b. Check oil level.

STEP	UNIT	ACTION
		c. Check water level in batteries.
		d. Make visual inspection of equipment for defects.
		e. Secure fire extinguisher. Keep extra fuel containers and replace tarpaulin.

Chapter 3

Antennas

One of the most important considerations when operating a radio is the type of antenna to be used. For good communications with a radio operating in the HF range (2.000 kHz to 29.999 MHz), you must consider the—

- Type of antenna.
- Operating frequency.
- Terrain around the radio site.
- Time of day.
- Location of and distance between radios.
- Atmospheric conditions.

The operator can sometimes control the first four or five factors. The antenna and frequency are the most important considerations under his control. Both should be selected to suit the distance between the radios and the propagation characteristics. The operator will most likely have two or three different frequencies assigned for the operation or exercise. These will be found in the SOI under the net in which he is operating.

Section I. Antenna Selection

a. The field environment, tactical situation, and distance between radio sites determine the type of antenna used. If the radio set is used while on the move, the whip antenna supplied with the equipment is normally used. The whip antenna, using the ground wave, is satisfactory for most short-range missions.

b. If the tactical situation permits, a simple half-wave dipole antenna (doublet) or the NVIS antenna is used to extend the range of the radio by using the skip phenomenon. Skip means the radio waves are bounced off the ionosphere and back to earth giving coverage of 300 miles or more. Figure 3-1 shows the ground wave and sky wave using the skip phenomenon. The NVIS can be used at frequencies above 12 MHz but automatic tuning of the radio (AN/PRC-104A and/or AN/GRC-213) may not be possible at all frequencies.

c. When using an antenna with directional characteristics, orient the antenna so that it is most sensitive in the direction of the other station(s). Figure 3-2 shows the radiation pattern of the antennas.

d. Standard and optional antennas that can be used with IHFRs are listed below.

• WHIP ANTENNA	Omnidirectional (360-degree radiation pattern). Easily and quickly assembled and erected. Lightweight and easy to carry. Limited range (10 miles or less) over land.
• AS-2259/GR (NVIS)	Omnidirectional. Requires large clear area (80 feet square) for proper erection. Long range (0 to 300 miles).

• HALF-WAVE DIPOLE DOUBLET	Bidirectional (broadside to wire). Good portability. Quickly assembled and erected. Requires two or more vertical supports (trees, poles). Extended range (to 300 miles and beyond).
• QUARTER-WAVE SLANT WIRE	Bidirectional (broadside to wire). Good portability. Quickly assembled and erected. Requires only one vertical support (tree or pole). Range up to 1,000 miles.

NOTE: These are a few of the antennas that can be used.

Section II. Whip Antenna

a. When using a quarter-wave or whip antenna, ground the antenna to increase its effectiveness. Using this characteristic of the ground, an antenna a quarter-wavelength long can be made into the equivalent of a half-wave antenna. If such an antenna is erected vertically and its lower end is grounded, the ground takes the place of the missing quarter-wavelength, and the reflections supply that part of the radiated energy normally supplied by the lower half of an ungrounded half-wave antenna.

b. The antenna is grounded by grounding the vehicle itself. Use a ground stake at least 4 feet long, a hammer, and a ground strap.

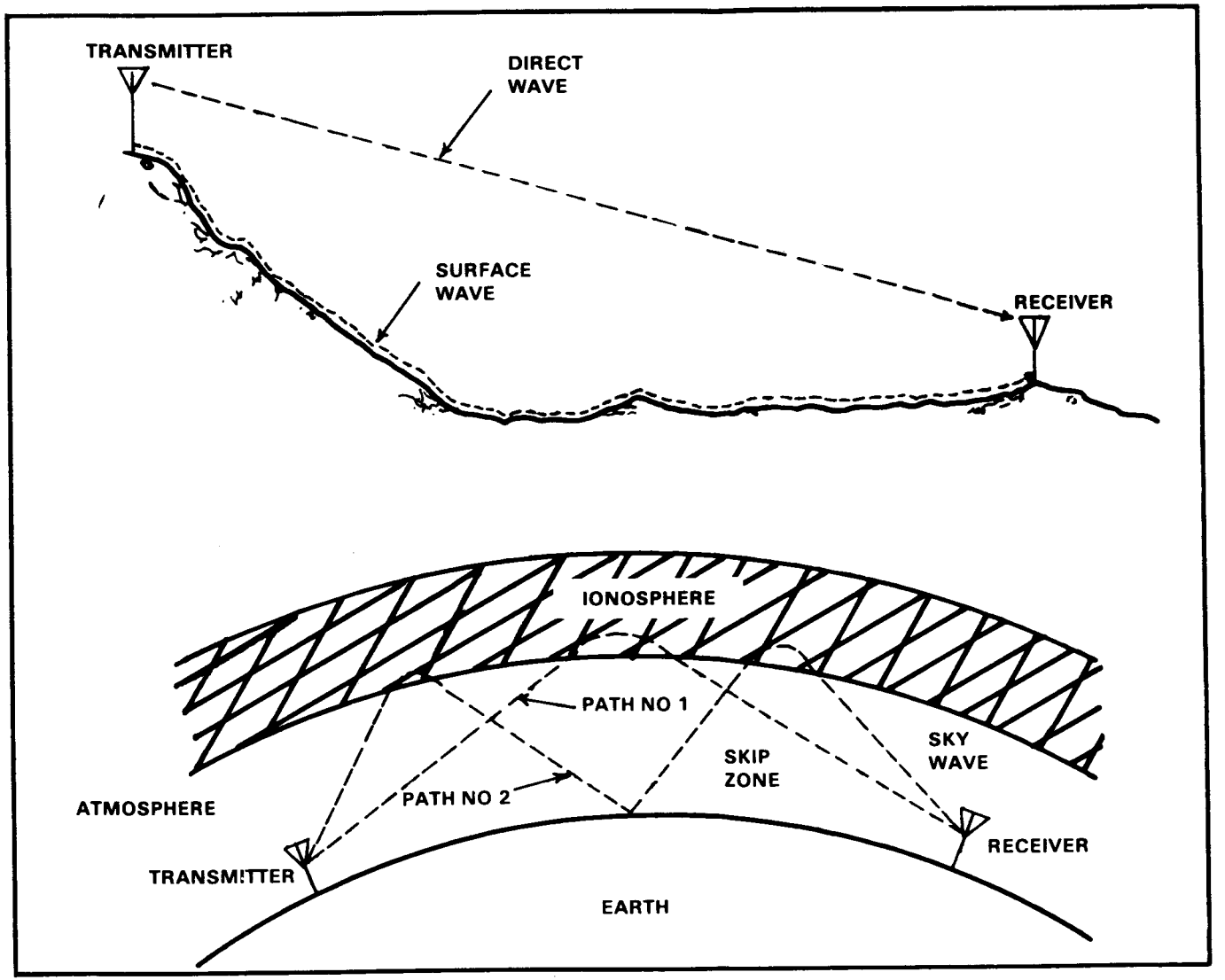

Figure 3-1. Sky-wave and ground-wave propagation.

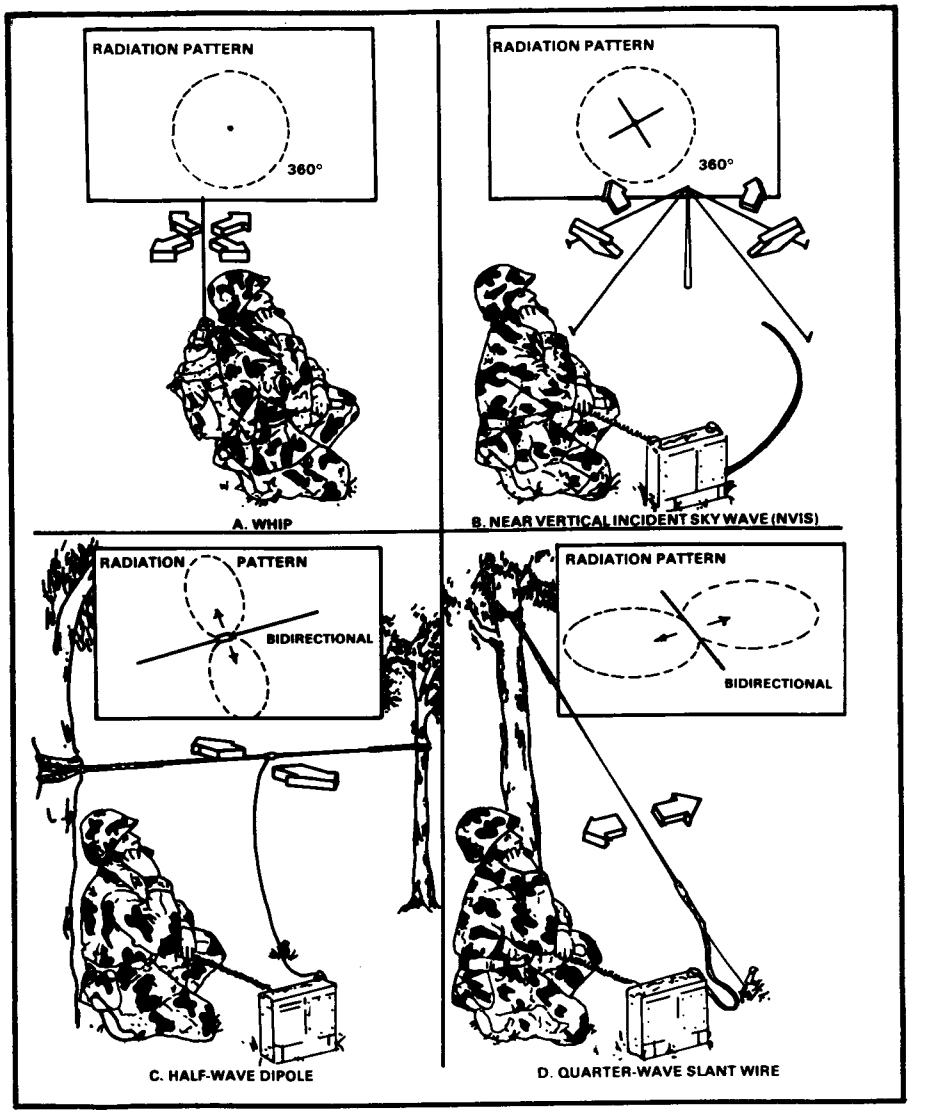

Figure 3-2. Antenna radiation patterns.

You may substitute a steel reinforcing rod, a steel fence poet, or a metal water or gas pipe cut to the right length for the ground stake. Ensure paint and rust are removed from such items. Substitutes for the ground strap include battery cables or any heavy gauge wire. Do not use Field Wire WD-1 because it does not provide a suitable ground. Drive the ground stake into the ground until the top of the stake is 2 to 4 inches above the ground. Attach one end of the ground strap to the stake and the other end to the vehicle body. Ensure all paint and rust are removed from connecting point of the vehicle body to allow a good metal-to-metal contact.

c. When a whip antenna is mounted on a vehicle, the metal of the vehicle will affect the operation of the antenna. As a result, the direction in which the vehicle is facing may also affect transmission and reception, particularly of distant or weak signals. A vehicle with a whip antenna mounted on its left rear side transmits its strongest signal in a line running diagonally from the antenna through the right front side of the vehicle. Similarly, an antenna mounted on the right rear side of the vehicle radiates its strongest signal in a direction diagonally toward the left front side. In some cases, the best direction can be determined by driving the vehicle in a small circle until the best reception is obtained.

Section III. Antenna RC-292

Antenna RC-292 is used to extend the distance range of the old and new generation of FM field radio sets. The antenna consists of one vertical radiating element and three ground plane elements. The lengths of these elements are determined by the operating frequency of the radio set. Refer to the antenna element selection chart at Table 3-1. The antenna is elevated on a 30-foot sectional mast which in turn is held erect by guy ropes and stakes. When the operating frequency is changed, check the antenna element selection chart. If the new frequency requires a change in element length, lower the antenna and add or subtract the required number of elements.

Radio Set or Receiver-Transmitter	Operating Frequency (MHz)	VERTICAL					GROUND PLANE				
		Total Number of Antenna Sections Required	Type of Sections Used				Total Number of Ground Plane Sections Required	Type of Sections Used			
			AB-21/GR	AB-22/GR	AB-23/GR	AB-24/GR		AB-21/GR	AB-22/GR	AB-23/GR	AB-24/GR
RT-246/VRC RT-524/VRC RT-505/PRC-25 RT-841/PRC-77	30 to 36.5 36.5 to 50.5 50.5 to 75.95	4 3 2	2 1 0	1 1 1	1 1 1	1 1 1	15 12 9	2 1 0	1 1 1	1 1 1	1 1 1

Table 3-1. Antenna element selection chart.

Section IV. Antenna Group OE-254/GRC

Description

Antenna Group OE-254/GRC is used to extend the range of the old and new generation of FM field radio sets. The antenna consists of three upward and three downward extended radials. These radials remain the same length for all frequencies from 30 to 88 MHz. The antenna is elevated on a 30-foot sectional mast held erect with guy ropes and stakes.

NOTE: No change needs to be made in the number of radials when a change of frequency is necessary.

Installation

STEP	ACTION
1	Site layout.

a. Position the base plate, with the ribs up, where the antenna is to be erected.

b. Drive the stake of the mast and base assembly (Figures 3-3 and 3-4) through the center hole of the base plate with the hammer.

CAUTION

Use extreme care in driving the stake with the hammer. The space between the ears of the stake is barely enough to clear the hammer. Hitting one of the ears with the hammer will break it.

c. Drive the two pin stakes through opposite corner holes of the base plate.

d. Assemble the five lower mast sections on the mast and base assembly.

e. Slide the lower guy plate (color coded blue) onto the male end of the lower adapter assembly and join it to the mast.

f. Assemble three upper mast sections on the lower adapter assembly.

g. Walk the assembled mast around the mast and base assembly. Drive the guy stakes as shown in Figures 3-3 and 3-4.

NOTE: Make sure the area for the anchors is firm. If the ground is marshy or sandy, get specific instructions from your supervisor on how to reinforce the anchors.

h. Return the mast and base assembly to the alignment shown in Figure 3-3.

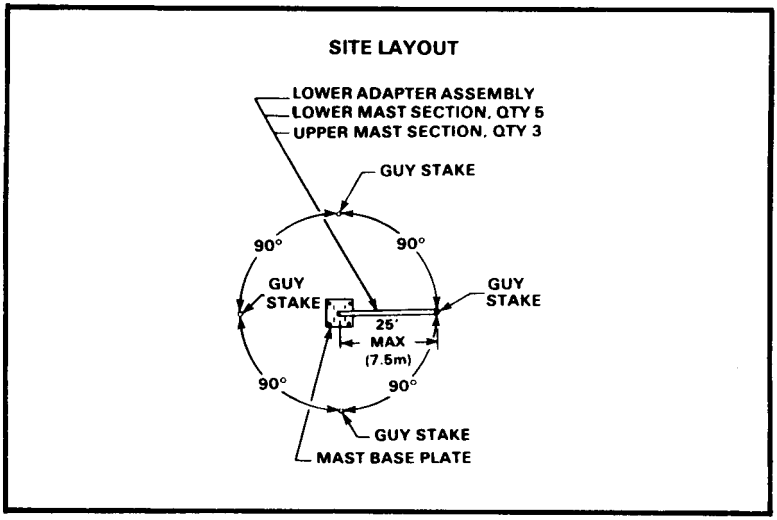

Figure 3-3. Positioning guy stakes.

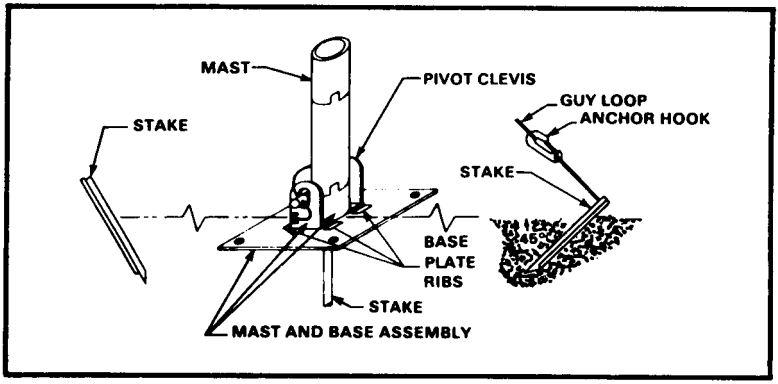

Figure 3-4. Ground anchor/pivot clevis alignment.

STEP	ACTION
2	Assemble the mast.
	a. Assemble the two remaining upper mast sections on the nine previously assembled.
	NOTE: If the antenna is not to be raised to its full height, reduce the number of mast sections. Eliminate the upper mast sections first. The lower and upper adapter assemblies and the insulating extension must be used.
	b. Slide the upper guy plate (color coded red) onto the male end of the upper adapter assembly and join it to the mast.
	c. Turn the guy plates so that one hole of each is uppermost.
3	Connect the guys.
	a. Attach the hooks of the lower guy assemblies (color coded blue) to the lower guy plate (Figure 3-5).
	b. Extend the guy assemblies to the side and back anchor hooks and attach the guy loops (Figure 3-6).
	c. Attach the hooks of the upper guy assemblies (color coded red) to the upper guy plate (Figure 3-5).
	d. Extend the upper guy assemblies to the side and back anchor hooks and attach the guy loops (Figure 3-6).
	e. Make sure that the mast assembly is laid out straight and crosses beside one guy stake (the back guy stake, Figure 3-14).
	f. Pull the upper and lower guys on each side tight (Figure 3-7) and secure them (Figure 3-8). Make sure the mast assembly is not pulled out of line.
	g. Lay the two bottom (upper and lower) guys along one of the tightened side guys and adjust them to the same length. Attach the bottom guy ropes to the back guy stake (Figure 3-14).

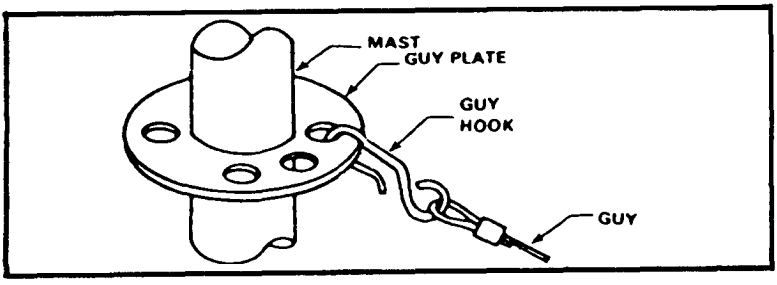

Figure 3-5. Attaching guy hooks to guy plate.

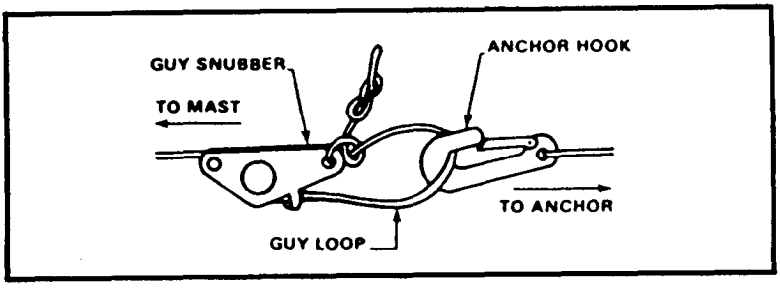

Figure 3-6. Attaching guy loops to ground anchor.

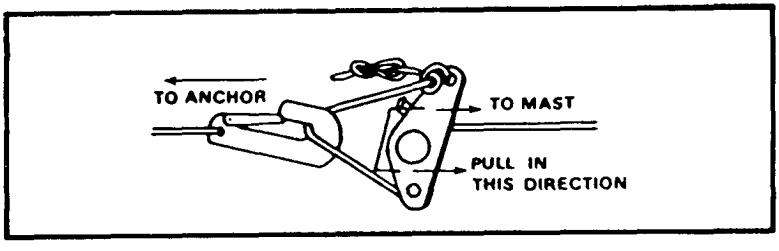

Figure 3-7. Pulling guy rope taut.

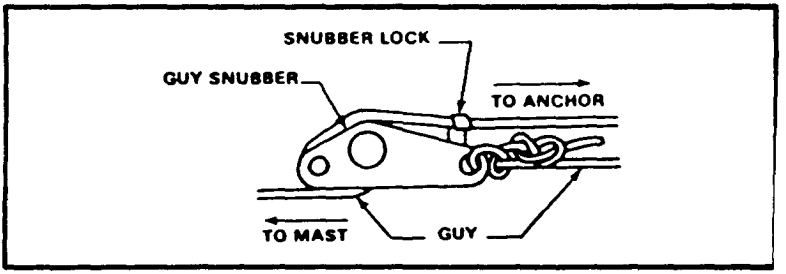

Figure 3-8. Securing guy with snubber lock.

STEP	ACTION
4	Assemble antenna elements.

a. Coat the threaded portion of the insulating extension with silicone compound (Figure 3-9).

b. Screw the insulating extension into the feed cone assembly and assemble it to the mast.

c. Coat the screw threads of 18 antenna elements (six each: MS-116A, MS-117A, and AB-24) with silicone compound.

d. Assemble six sets of antenna sections (one each: MS-116A, MS-117A, and AB-24 in each section) (Figure 3-10).

e. Assemble each antenna section to one of the sockets on the feed cone assembly.

NOTE: Additional weatherproofing of the antenna assembly may be made at this time by wiping the excess silicone compound from the antenna assembly and wrapping each joint with electrical tape.

STEP	UNIT	ACTION
5		Connect RF Cable Assembly CG-1889B/U.

a. Unscrew the connector cap of the feed cone assembly connector and secure the cap to the connector protective bracket (Figure 3-11).

b. Connect the RF Cable CG-1889B/U to the feed cone assembly connector (Figure 3-12).

c. Compress and open the strain relief clamp. Pass the cable of the clamp through the fifth hole of the upper guy plate (Figure 3-13). Secure the cable in the clips of the clamp.

d. Attach the strain relief clamp to the RF cable. Close and release the clamp.

e. Tape the RF cable connection (Figure 3-12) and tape the cable to the insulating extension just below the feed cone assembly. Tape the cable to the mast every 5 feet all the way to the bottom of the mast.

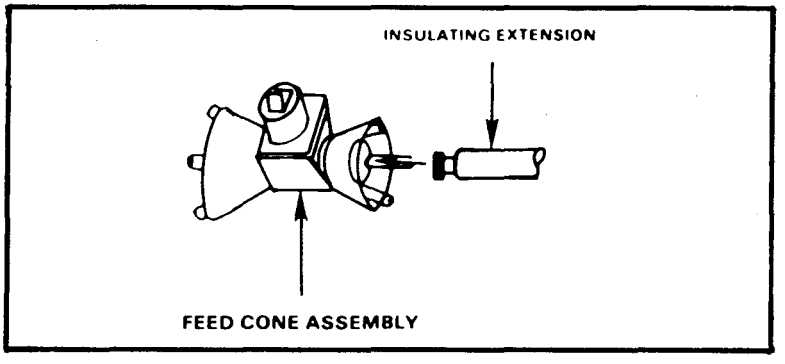

Figure 3-9. Connecting insulating extension to feed cone assembly.

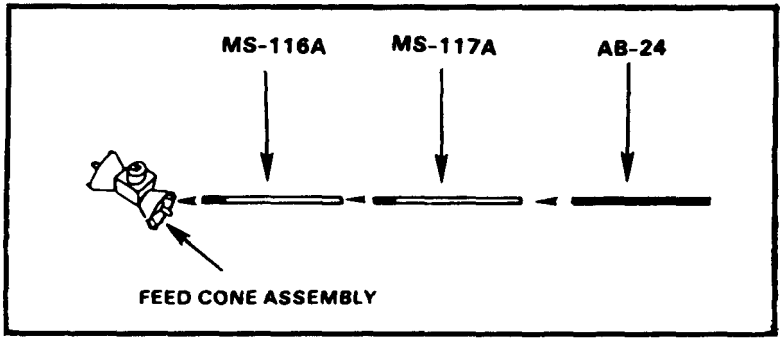

Figure 3-10. Assembling antenna elements.

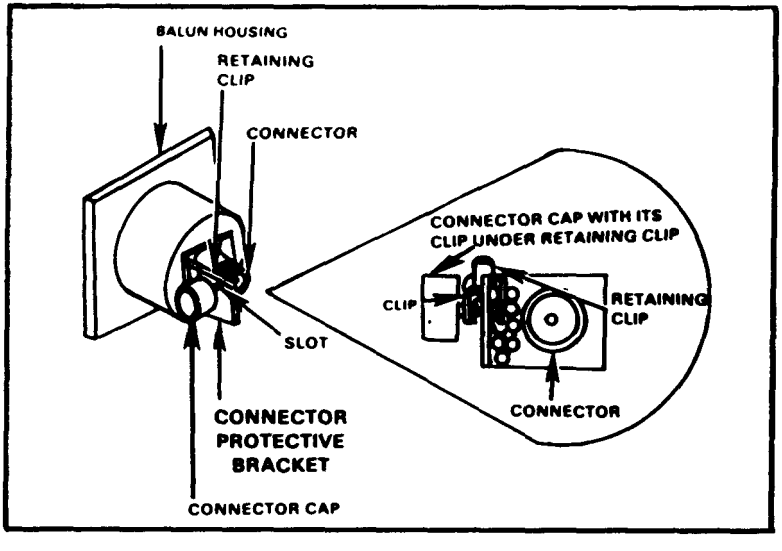

Figure 3-11. Captivating feed cone assembly connector cap.

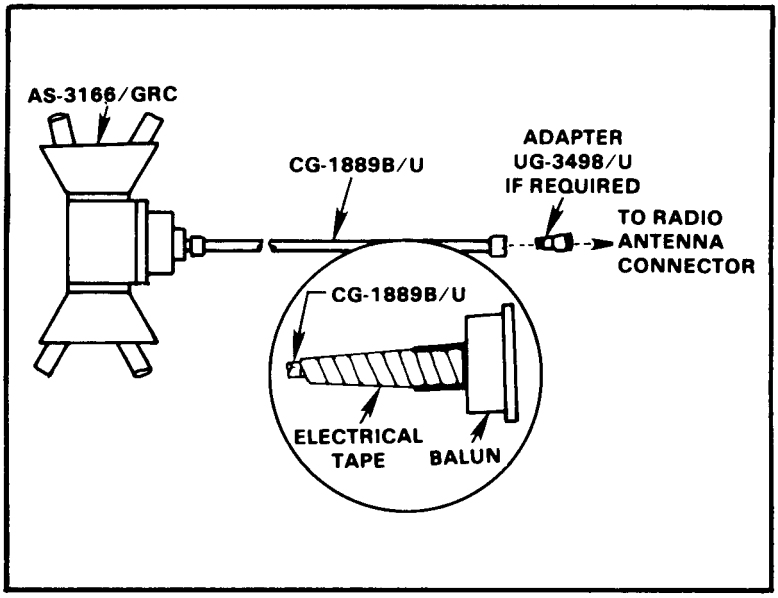

Figure 3-12. Connections of CG-1889B/U to AS-3166/GRC and radio.

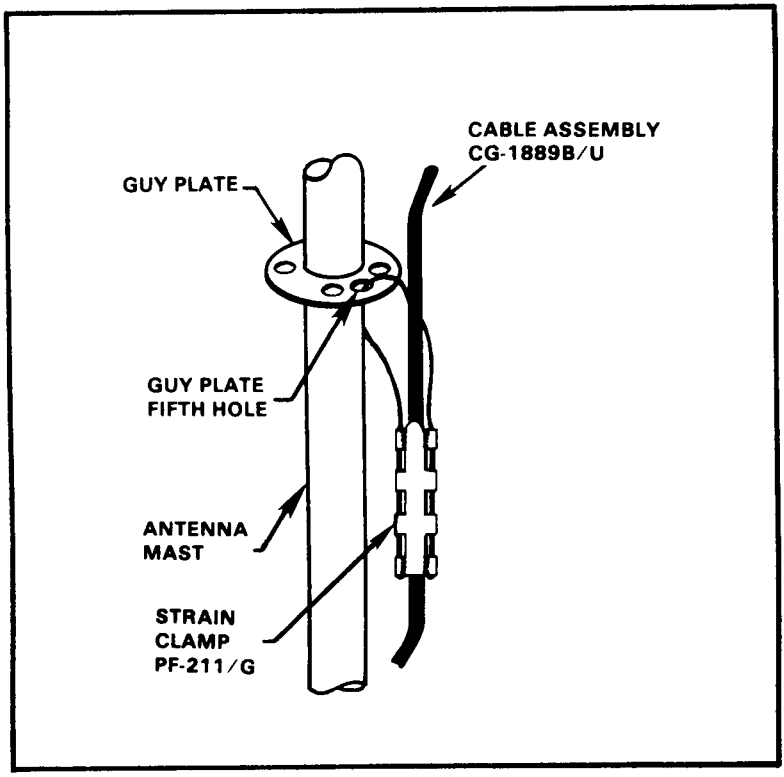

Figure 3-13. Strain clamp closed.

STEP	ACTION
6	Erect the antenna.

WARNING 1

When erecting the antenna, allow only team personnel in the erecting area.

WARNING 2

Clearly mark all guys with warning flags or signs (supplied by your unit). In an emergency, use strips of white cloth as warning streamers.

a. Preparation.

(1) Installer—near the baseplate assembly in line with the far guy stake holding the free guys (Figure 3-14).

(2) Assistant—at the top holding the antenna at shoulder height.

b. Raising.

(1) Installer—bow the top end by pulling the guys tight and walk backward pulling the mast slowly and firmly erect.

(2) Assistant—walk toward the base pushing the mast upward.

c. Adjusting.

(1) Connect the free guys to the remaining guy stake assembly (Figure 3-6) and tighten the guys.

(2) Adjust all the guy ropes evenly. Check for vertical position by comparing the mast with a building, pole, or other vertical object.

NOTE: Leave a slight slack in each guy to allow for expansion and contraction of the mast and guys. Check the tension in the morning and during the day. Experience with temperature conditions in the area will determine how tight the guys should be.

STEP	ACTION
	WARNING **If the weather in your area can cause ice to form on the antenna and guys, add extra guys to support the system. Rope off the area and post it with warning signs, such as beware of falling ice. Keep a sharp aye on the anchors and guys. Check them daily and immediately before and after bad weather.**
7	Connect the antenna. (Refer to TM 11-5985-357-13.) **NOTE:** For AN/VRC-12 family FM radios with BNC type antenna connectors, use the UG-349B/U adapter on the end of the CG-1886B/U RF cable (Figure 3-12).

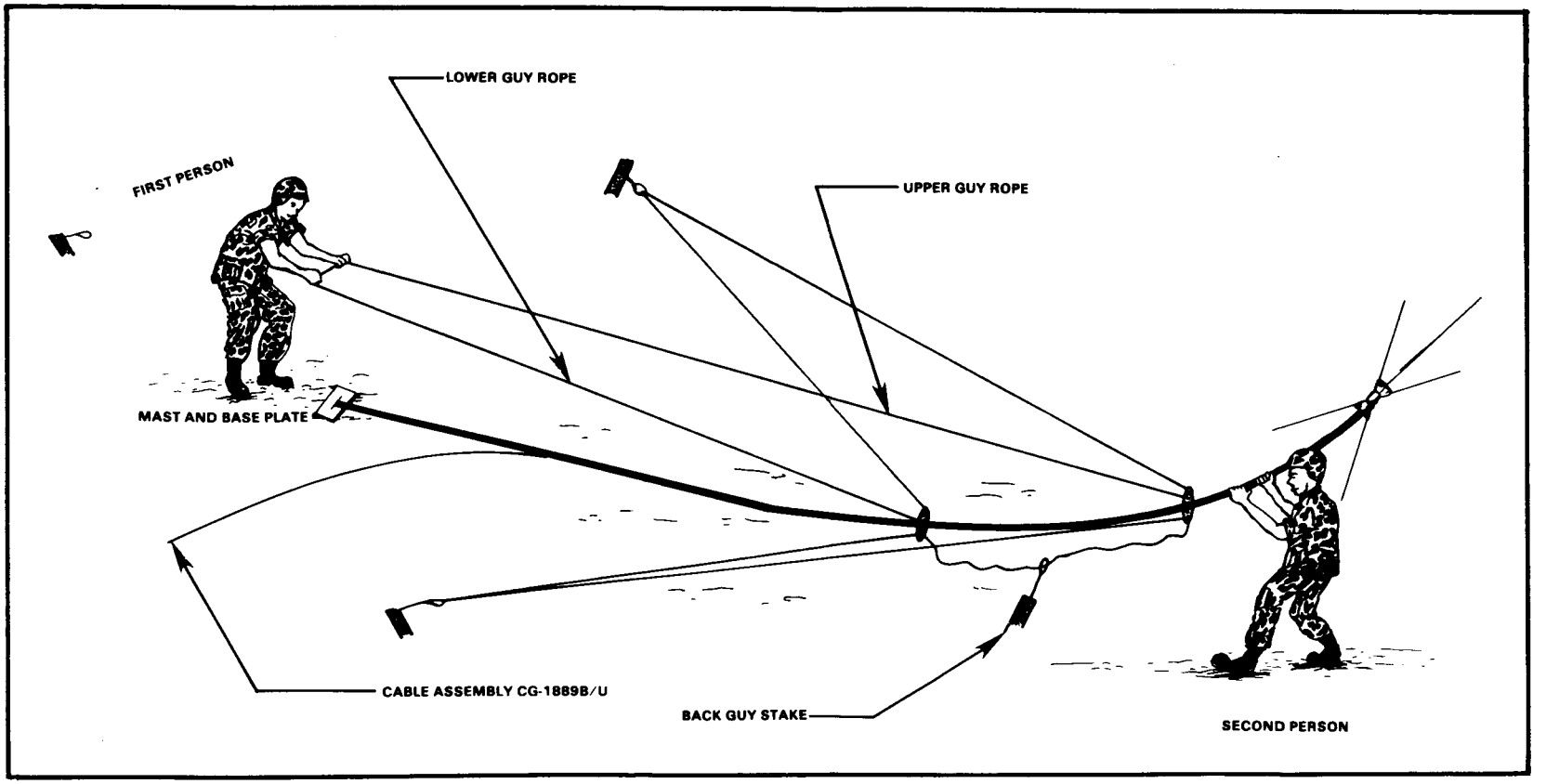

Figure 3-14. Erecting antenna group OE-254/GRC.

Section V. Doublet Antenna

Determining Doublet Antenna Length

STEP	ACTION
1	Determine frequencies to be used.
2	Compute the lengths desired.

Use formula:

$$L = \frac{468}{F}$$

L - means length of antenna in feet and tenths of feet.

F - means frequency in MHz

Example:

$$L = \frac{468}{8.641 \text{ MHz (frequency)}}$$

$$8.641 \overline{)468.000} \quad 54.1$$

NOTE: This formula does not apply to antennas longer than half-wave.

Section V. Doublet Antenna

Determining Doublet Antenna Height

STEP	ACTION
1	Determine frequency to be used.
2	Use formula for quarter-wave.

$$F \overline{\big/ \frac{H}{246}}$$

F - means frequency in MHz.
H - height of antenna in feet.

EXAMPLE

$$5.7 \overline{\big/ \frac{43}{2460}}$$ (or 8 AB-155 40 feet)

3	Use formula for tenth of a wave.

$$F \overline{\big/ \frac{H}{98.4}}$$

F - means frequency in MHz.
H - height of antenna in feet.

EXAMPLE

$$5.7 \overline{\big/ \frac{17}{98.4}}$$ (or 3 AB-155 15 feet)

The height of the doublet antenna above the ground determines the radiation pattern, or take-off angle. The radiation pattern for a distance of 0 to 250 miles should be straight up. To determine the height of your doublet antenna, use OTF. For daytime uses of 4.8 to 9.7 MHz for a distance of 100 miles, use the formula for a quarter-wave. For nighttime uses of the same frequency of 4.8 to 9.7 MHz, use the formula for a tenth of a wave.

Doublet Antenna

Orientation

STEP	ACTION
	WARNING **When making adjustmants to an antenna, the transmitter on the radio set must be off.**
1	The radiation pattern of the doublet antenna will be broadside when the fundamental half-wavelength is used. (Use a compass for accurate determination of the antenna orientation.)
2	Stretch the antenna wire along the ground broadside to the weakest distant station.
3	Place the end masts several feet beyond the end insulators.
4	The center mast should be at the coaxial connector and offset 3 feet from the line between the two end masts. a. This allows the antenna to clear the center mast. b. A center mast is not required if the antenna is less than 120 feet.
5	Guy plates are installed on mast sections number 3, 5, and 8.

Doublet Antenna

Installation Using AB-155A/U

Figure 3-15 shows correct installation of a doublet antenna using mast assembly AB-155A/U. Pay particular attention to mast height. For maximum effectiveness, erect a doublet antenna at least a quarter-wavelength off the ground. Forty-foot masts provide adequate height in most instances.

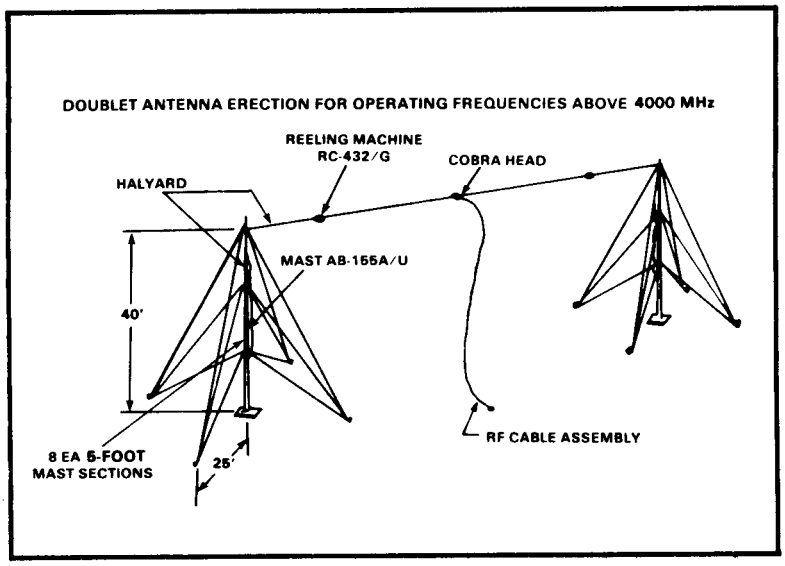

Figure 3-15. Doublet antenna installation using AB-155A/U.

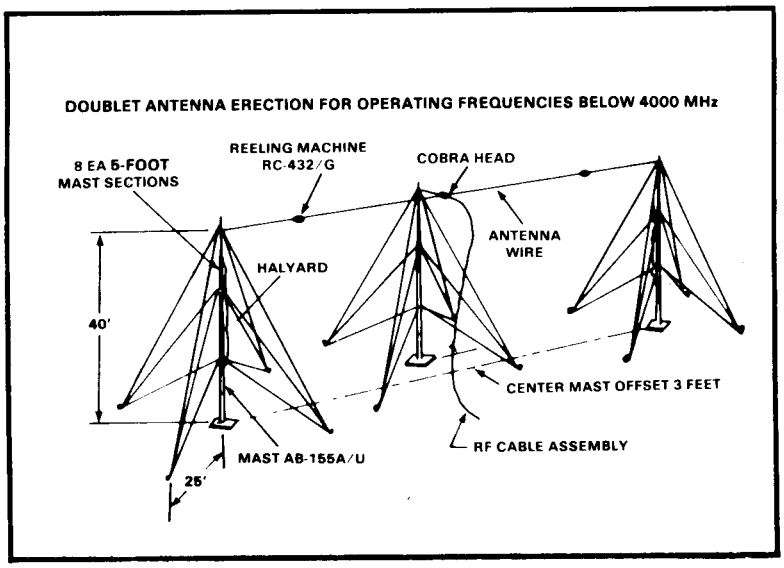

Figure 3-15. Doublet antenna installation using AB-155A/U. (continued)

Section VI. NVIS Antenna AS-2259/GR

Description

a. The NVIS Antenna AS-2259/GR is a lightweight, sloping dipole, omnidirectional antenna. It is designed to be used with an AM radio operating in the HF range of 2 to 30 MHz. It provides high angle radiation (near vertical incidence) to permit short-range sky wave propagation over communications circuits varying from 0 to 300 miles. It can be used with tactical HF radio communications equipment that tunes a 15-foot whip antenna. Examples of such equipment are the AN/GRC-106 and the IHFRs (AN/PRC-104A and AN/GRC-213/193A). Figure 3-16 shows an operational AS-2259/GR NVIS.

b. An adapter MX-10618/GRC-193A is used to interface the vehicle's whip antenna base with the AS-2259/GR. Do not use the adapter MX-9313/GR provided with some of the earlier antenna kits with the AN/PRC-104A or AN/GRC-213/193A. It is used to interface radios with greater output power (AN/MRC83/87). The antenna weighs about 14.7 pounds and can be erected by two men in about 5 minutes. The antenna is polarized horizontally and vertically at the same time, radiating RF energy in all directions at the same time. It consists of eight lightweight mast sections that function as the antenna coax feed line and four radiating elements that also serve as guys supporting the mast.

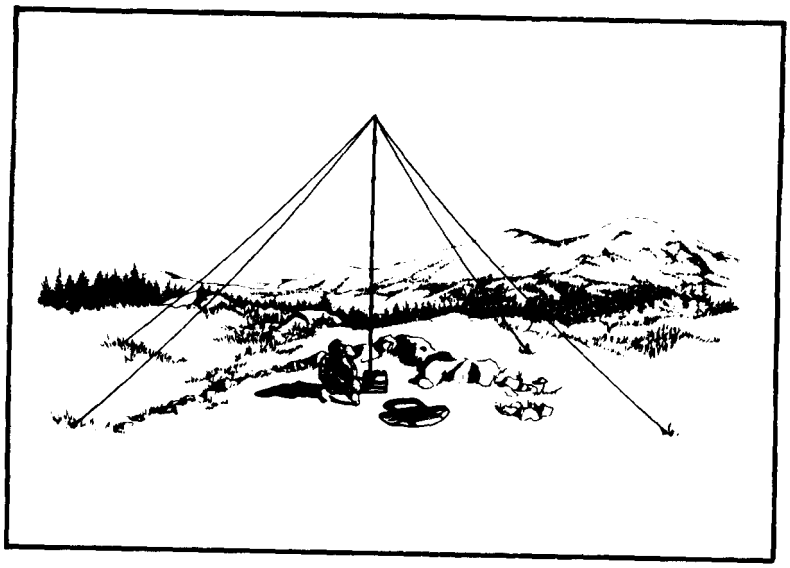

Figure 3-16. AS-2259/GR (NVIS).

NVIS Antenna AS-2259/GR

Installation

STEP	ACTION
1	Site selection.

An 84- by 84-foot clear area is required for installation of the AS-2259/GR antenna. Figure 3-17 shows an antenna site with inadequate distance between power lines and antenna mast.

DANGER

Antennas must be separated from power lines by a distance equal to twice the height of the antenna. Antenna contact with power lines may cause serious injury or even death to the operator. Be sure transmittal power is off. Contacting the antenna when the transmittal is keyed will cause electrical burns.

Ground installation.

a. Open antenna pack. Remove antenna base (Figure 3-19) and place it on the ground.

b. Remove top mast assembly (Figure 3-19) and install it on the antenna base.

c. Uncoil the antenna elements and stretch them in the direction in which they leave the top housing. Ensure the elements are not shorted to each other or to the housing. If necessary, adjust the direction of the elements.

d. Measure anchor positions using the sleeve cable markers as guides and install guy stakes as shown in Figure 3-20. Leave slack in the elements lying on the ground.

NOTE: Before assembling mast sections, wipe unpainted surfaces clean of mud or dirt to ensure good electrical contact.

e. Assemble mast by raising the top mast assembly vertical to the ground and by inserting each of the seven 22-inch sections into the bottom of the previous section. Continue to lift upward on the mast as each section is installed. Insert the bottom section of the mast onto the mast base (Figure 3-18) by lowering it into place.

f. Adjust tension on all elements until mast is vertical and straight. Elements need not be excessively taut (3 to 5 pounds of tension).

3 Vehicular installation.

Install the AS-2259/GR antenna on vehicular mounts the same as above, except use the vehicular whip mount. Use the Adapter MX-10618 instead of the base assembly. Use only the number of mast sections needed to raise the top of the antenna to about 16 feet.

NOTE: Do not use the Adapter MX-9313/GR that may be in earlier models of the AS-2259/GR with any of the IHFR systems. Use the MX-10618 with IHFR sets.

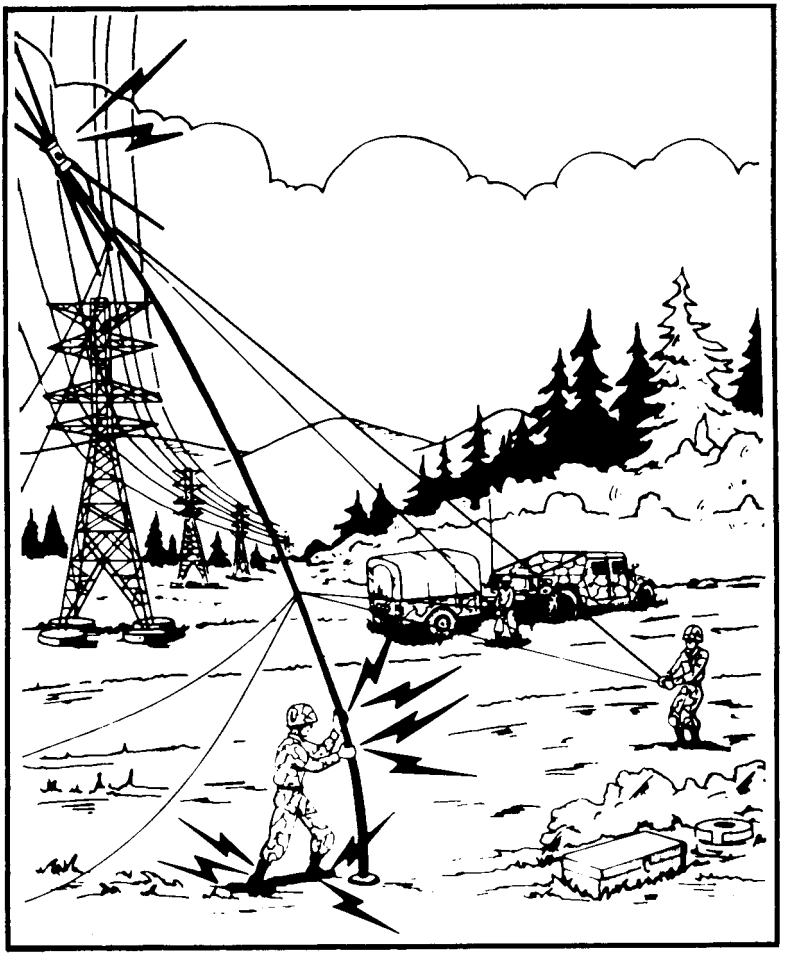

Figure 3-17. Antenna site with inadequate distance between power lines and antenna mast.

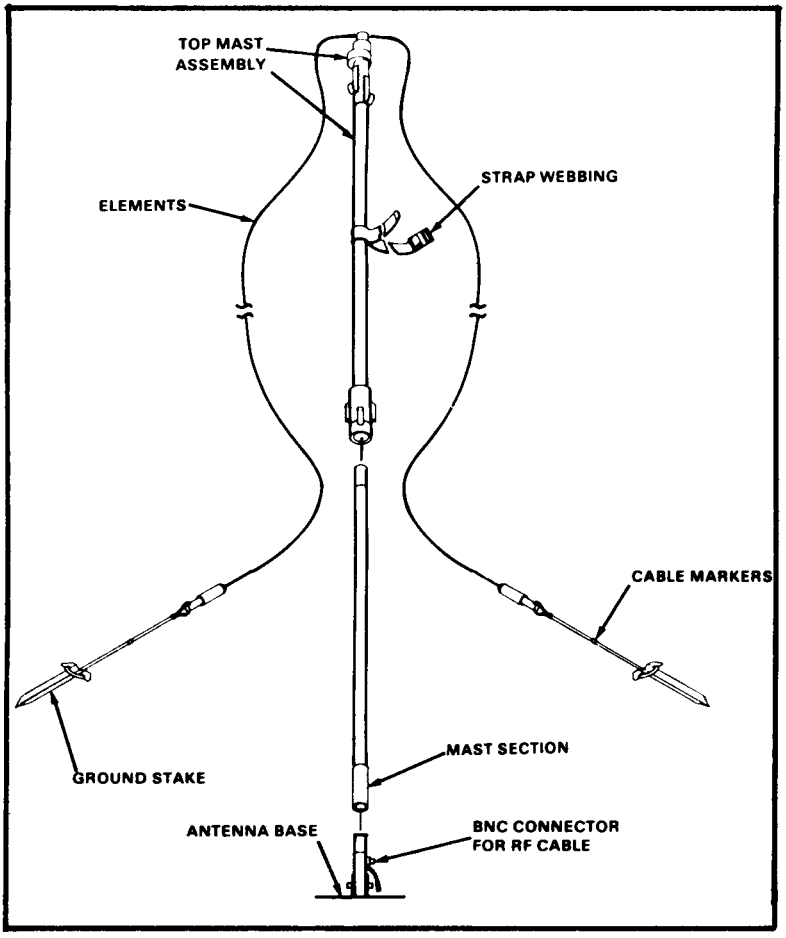

Figure 3-18. AS-2259/GR antenna base.

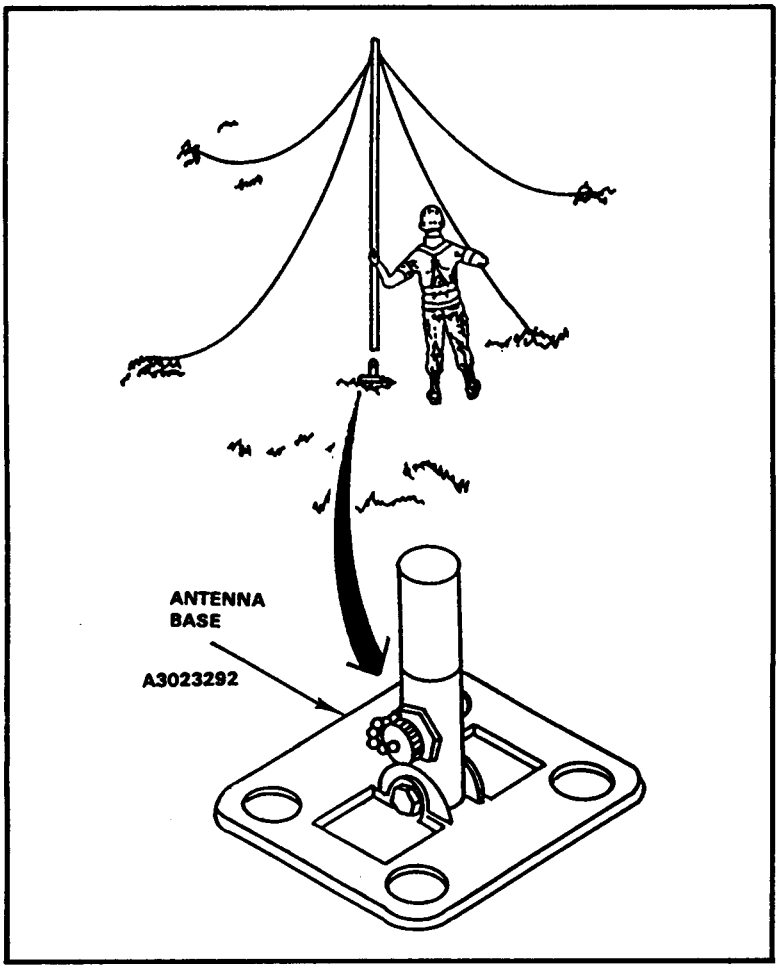

Figure 3-19. AS-2259/GR antenna top mast assembly installation.

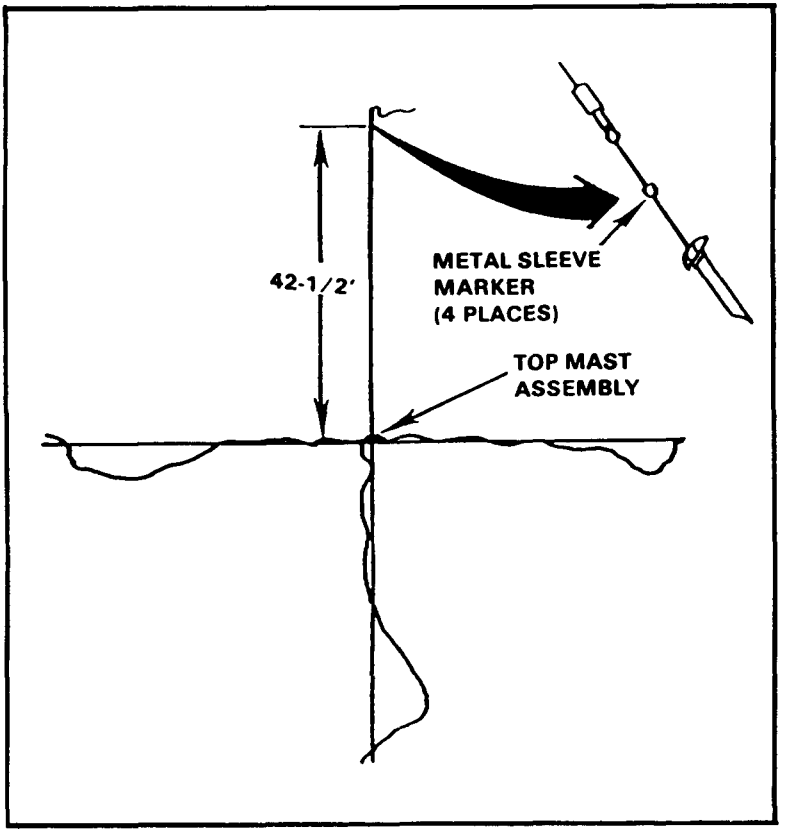

Figure 3-20. Guy stake installation.

Section VII. Field Expedients for Antennas

a. Antennas are sometimes broken or damaged resulting in failed or poor communications. If a spare is available, replace the damaged antenna. When there is no spare, fabricate an emergency antenna. For more information on how to repair and fabricate antennas refer to FM 24-18. The following suggest ways to construct an emergency antenna.

(1) The best wire for antennas is copper or aluminum. In an emergency, however, use any wire available. WD-1/TT is suitable for this purpose.

(2) The exact length of many antennas is critical. Therefore, the length of the emergency antenna should be the same as the length of the antenna it replaces.

(3) Antennas supported by trees can usually survive heavy windstorms if the trunk of a tree or a stout limb is used for support. To keep the antenna taut and to prevent it from breaking or stretching, attach a spring or a strip of old inner tube to one end of the antenna, or pass a rope through a pulley or eye hook, attach the rope to the end of the antenna, and load the rope with a heavy weight to keep the antenna taut.

(4) Guys used to hold antenna supports are made of rope or wire. To ensure that wire guys will not affect the operation of the antenna, cut the wire into several short lengths and connect the pieces with insulators. Small pieces of dry wood, bottles, or even suitably shaped stones may be used.

b. An improvised antenna may change the performance of a radio set. Use either of the two following expedient methods to determine whether the improvised antenna is operating properly.

(1) The distant receiver may be used to test the antenna. If the signal received from a station is strong, the antenna is operating satisfactorily. If the signal is weak, adjust the height and length of the antenna and transmission line to receive the strongest signal at

a given setting of the volume control of the receiver. If your set is equipped with a power or SWR meter, use this device to adjust your antenna.

(2) In some radio sets, the transmitter is used to adjust the antenna. First, set the controls of the transmitter in the proper position for normal operation; then, tune the system by adjusting the antenna height, length, and the transmission line length to obtain the best transmission output.

c. When a whip antenna is broken into two sections, the portion of the antenna that is broken off can be connected to the portion attached to the base fitting by joining the sections together. When both parts of the broken whip are available and usable, connect the two broken ends together and wrap with wire, ensuring that wrapping is clean and tight. Lash pole or branch to antenna until antenna will stand alone. When the portion of whip that is broken is missing or unusable, add a piece of wire that is nearly the same length as the broken section. Then, lash a pole the length of the antenna securely to the base section of the antenna and tie wire to the top of pole. If possible, solder the connections.

d. Emergency repair of wire antennas can be grouped into two categories: repair or replacement of the wire used as an antenna or transmission line; and repair or replacement of the assembly used to support the antenna wires.

(1) When one or more wires on an antenna are broken, the antenna can be repaired by reconnecting the broken wires. To do this, lower the antenna to the ground, clean the surface of the wire, and twist the wires together. Whenever possible, solder the connections.

(2) If the antenna is damaged beyond repair, substitute another antenna. If antenna sections are not available, WD-1 (field wire) can be used as a substitute. Ensure the length of the wire is the same length as the original antenna and you have a good wire to antenna contact.

e. Building a good field-expedient vertical half-rhombic antenna calls for a good resistor, not a dead BA-30 battery or a C-rat can full of sand and oil. Plan ahead. If you can, lay in a supply of the 600-ohm 2-watt resistors. Since 600-ohms is not a standard resistor value, you have a choice. Get a 620-ohm, 2-watter with NSN 5905-00-407-6167, or wire 2 1200-ohm, l-watt resistors in parallel. Get them with NSN 5905-00-369-6916. Then, follow the directions on how to fabricate antennas. Put the resistor on the end nearest your receiving station. Remember, resistor wattage must beat least half of the radio's output wattage. (See Figure 3-21.)

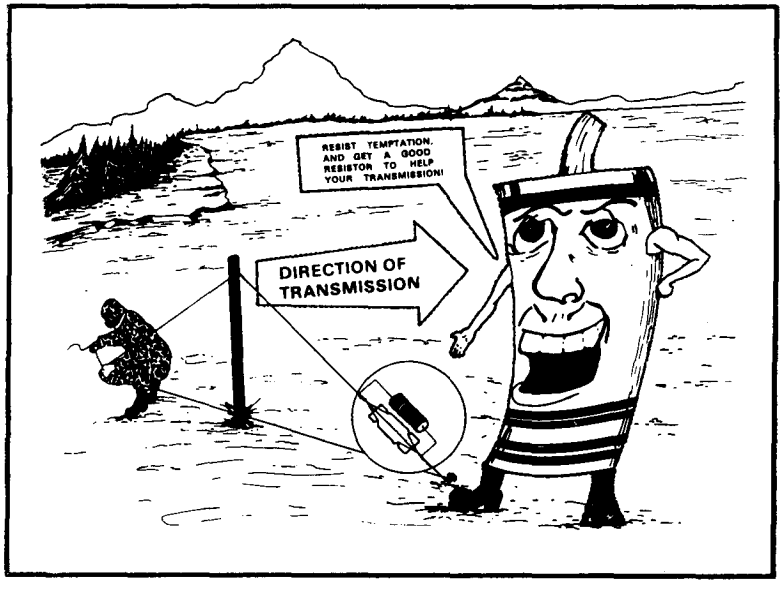

Figure 3-21. Proper resistor.

Section VIII. Grounding Systems

STEP	ACTION
1	Ground Rods.
	a. Dig a hole 6 to 8 inches deep and 18 inches wide.
	b. Drive ground rod until rod is about 3 inches above bottom of hole.
	c. Connect ground strap to clamp or terminal (see note).
	d. Fill hole with water (salt water, if possible).
	e. After water soaks in, fill hole with dirt.
2	Underground Objects.
	WARNING **If underground pipes or tanks are used, ensure they do not contain gasoline, oil, or other flammable liquids or gas.**
	a. Buried pipes, steel building frames, metal poles, storage tanks, and other similar underground objects may be used for grounding system.
	b. Connect ground strap. If no bolt or screw is available, use clamp to connect ground strap (see note).
	c. Ensure underground object is metal not plastic.
3	Ground Plates.
	a. Use a 3- by 3-foot or larger metal plate. Heavy mesh such as a section of chain link fence may also be used.
	b. Drill a hole in center of plate and fasten ground strap with bolt or screw.

c. Dig pit at least 4 feet deep and lay plate inside.

d. Fill hole with dirt and soak with water.

NOTE: Use the "wrap method" if a terminal screw or a ground clamp is not available. Bind the ground strap to the rod by using strong, flexible bare wire. Wrap about 24 turns of the wire around the strap and the rod, then solder the wire and strap to the rod. If solder is not available, twist the ends of the wire as tight as you can, then tape the connection to keep out moisture.

Chapter 4

Communications Security Equipment

Section I. TSEC/KY-8

Programming Instructions

STEP	ACTION
1	Open TSEC/KYK-12.
2	Locate setting number 1 on key list and TSEC/KYK-12.
3	Position slider on TSEC/KYK-12 according to letters on key list.
4	Follow the key list, place each slider in the proper position for all 34 settings. Ensure all sliders are locked into position.
5	Close TSEC/KYK-12.
6	Secure key list.

TSEC/KY-8

Operating Instructions (with Remote Control Unit)

STEP	ACTION
1	Connect all cables.
2	Switch radio power off.
3	Switch RCU power off.
4	Switch RCU to CIPHER.
5	Switch KY-8 to REMOTE.
6	Key KY-8. (Insert programmed KYK-12.)
7	Switch RCU power on.

STEP	ACTION
8	Switch radio power on.
9	Perform KY-8 alarm test. (Pause at each position. Red light should blink. Beeps should be heard.)
10	Press PUSH-TO-TALK switch. Get single beep.
11	Begin secure transmission.
12	Follow only steps 10 and 11 above for subsequent transmissions.

NOTE: If constant beeps sound or red light flashes during any cipher transmission, repeat all steps. If problem repeats, switch to plain voice and seek maintenance help.

EMERGENCY

Eliminate key according to local zeroize procedure.

TSEC/KY-8

Operating Instructions (without Remote Control Unit)

STEP	ACTION
1	Connect all cables.
2	Switch radio power off.
3	Switch KY-8 power off.
4	Switch KY-8 to CIPHER.
5	Switch KY-8 to LOCAL.
6	Key the KY-8.
7	Turn KY-8 power on.
8	Switch radio power on.

STEP	ACTION
9	Perform KY-8 alarm test. (Pause at each position. Red light should blink. Beeps should be heard.)
10	Press PUSH-TO-TALK switch. Get single beep.
11	Begin secure transmission.
12	Follow only steps 10 and 11 above for subsequent transmissions.

NOTE: If constant series of beeps are heard, or flashing red light occurs during any cipher transmission, repeat all steps. If problem repeats, switch to plain voice and seek maintenance help.

EMERGENCY

Eliminate key according to local zeroize procedure.

Section II. TSEC/KY-38

Programming Instructions

STEP	ACTION
1	Hold TSEC/KYK-28 with hinge downward and handle toward you, press latch with right thumb.
2	Open TSEC/KYK-28 and release brakes.
3	Locate setting number 1 on key list and TSEC/KYK-28.
4	Position slider on TSEC/KYK-28 according to letters on key list.
5	Follow the key list, place each slider in the proper position for all settings. Ensure all sliders are locked into place.
6	Lock brakes. (If brakes do not lock, recheck sliders.)
7	Close TSEC/KYK-28 and press latch.
8	Secure key list.

TSEC/KY-38

Operating Instructions

STEP	ACTION
1	Connect cable from power plug on radio to radio plug on KY-38.
2	Connect handset cable to KY-38 audio plug.
3	Key the KY-38.
4	Turn radio on.
5	Switch KY-38 to CIPHER.
6	Switch KY-38 delay to IN.
7	Press handset PUSH-TO-TALK switch. a. Get three rapid beeps. b. Then one lower-pitched beep.
8	Following transmissions: a. Switch delay to out unless using retransmission HYL-3/TSEC. b. Press handset PUSH-TO-TALK switch. Get one beep. c. Begin secure transmissions.

NOTE: If constant series of beeps are heard during any cipher transmission, repeat entire first start.

EMERGENCY

Turn ZEROIZE switch clockwise (toward direction of arrow).

Local Remedy for Minor Problems

STEP	INDICATIONS	ACTION
1	First indication of trouble	Clean cable connections with pencil eraser - repeat operating instructions.
2	No beep(s) No steady tone	Rotate batteries and repeat operating instructions.
3	Still dead headset	Replace batteries and repeat operating instructions.
4	Steady tone heard	Verify correct key setting; key equipment again; repeat operating instructions.
5	Constant series of beeps	Release PUSH-TO-TALK switch and try again.
6	Still beeps	Verify correct key settings; key equipment again; repeat operating instructions.

NOTE: If problem cannot be solved by above remedies, switch to plain voice.

Section III. HYL-3/TSEC

Prestart Operating Procedures (all Modes)

STEP	ACTION
1	Connect radio sets to HYL-3/TSEC connectors RT/1 and RT/2.
2	Preset RT number 1 frequency the same as RT number 3 and RT number 2 frequency the same as RT number 4.
3	AN/PRC-77: Place radio FUNCTION switches to RETRANS.
4	AN/VRC-12: Place SQUELCH switches to NEW SQUELCH OFF.
5	Set radio VOLUME controls to MID-RANGE. (Do not adjust during operation.)
6	Set radio, X-mode equipment, and HYL-3/TSEC POWER switches to ON.

HYL-3/TSEC

Retransmission Procedures

STEP	ACTION
1	Set HYL-3/TSEC FUNCTION switch to RETRANS.
2	Connect handset to HYL-3/TSEC HANDSET connector and adjust listening level using HYL-3/TSEC VOLUME control (for monitoring transmission only).
3	If X-mode monitoring is required, connect X-mode equipment to the HYL-3/TSEC X-MODE connector and connect handset to the X-mode equipment. Adjust listening level using the X-mode VOLUME control.

Section IV. TSEC/KY-57

Installation in Manpack Operations

STEP	ACTION
1	TSEC/KY-57 Battery Pack Installation:
	a. Place the TSEC/KY-57 on a flat surface with the POWER connector on the rear panel facing upwards.
	b. Open rear latches on the TSEC/KY-57.
	c. Place battery BA-5590/U over POWER connector and seat firmly.
	CAUTION Check the safety relief valve on the side of the battery case to assure proper venting capability.
	d. Slide the battery case over the battery.
	e. Close latches securing battery case to the TSEC/KY-57.
2	TSEC/KY-57 Fill Battery Installation:
	a. Loosen the captive screws on the fill battery cover located on the bottom of the TSEC/KY-57 and remove cover.
	b. Install a BA-1372/U battery in the battery compartment.
	c. Reinstall the fill battery cover and tighten the captive screws.
	NOTE: The batteries should be removed if the TSEC/KY-57 is to be put in long-term storage.
	DANGER **Under excessive heat, mercury batteries BA-1372/U will explode and spread mercury contamination. Sufficient heat to cause explosion may be generated by accidental shorting or by incineration. Exercise caution when using mercury batteries to prevent accidental shorting. Dispose of mercury batteries by burying them in nonconductive container.**

STEP	ACTION
3	Connect cable CX-12991/U from POWER connector on RT-841/PRC-77 to RADIO connector on TSEC/KY-57.
4	Connect handset cable to TSEC/KY-57 AUDIO connector.

NOTE: Installation procedures of communications security equipment TSEC/KY-57 for wheeled and tracked operations are too numerous to be included in this handbook.

TSEC/KY-57

Loading Procedures

STEP	ACTION
	Using VINSON Fill Device KOI-18/TSEC:
1	Set TSEC/KY-57 MODE switch to C and POWER switch to ON. Alarm should be heard on handset (or CVC helmet in tracked vehicles).
2	Press and release handset PTT to clear alarm. (In tracked vehicle operation, place the switch on the audio accessory of the CVC helmet in the forward position and release.)
3	Connect KOI-18/TSEC (tape reader) to TSEC/KY-57 with fill cable.
4	Set the TSEC/KY-57 MODE switch to LD. (Constant tone indicates slot is empty; beep indicates variable in slot.)
5	Set TSEC/KY-57 FILL SELECTOR switch to slot to be filled.
6	Insert tape into KOI-18/TSEC feed slot; line up tape feed holes with white dots on KOI-18/TSEC.
7	Press and release handset PTT. (When using CVC helmet, place AUDIO ACCESSORY switch to the FORWARD position and release.)

STEP	ACTION
8	Pull tape slowly through KOI-18/TSEC. Beep over handset indicates good parity.
9	Identify the variable loaded on the TSEC/KY-57 writing surface.
10	Repeat steps 4 through 9 until all desired variables are loaded.
11	Set TSEC/KY-57 MODE switch to C and disconnect fill cable.

Using VINSON Fill Device KYK-13/TSEC:

1 Perform steps 1 and 2 above.

2 Connect KYK-13/TSEC to TSEC/KY-57 directly or with fill cable.

CAUTION

When connecting the KYK-13/TSEC to the TSEC/KY-57, the MODE switch of the KYK-13/TSEC should be in the OFF/CK position.

3 Set TSEC/KY-57 MODE switch to LD.

4 Set TSEC/KY-57 FILL SELECTOR switch to slot to be filled. (Constant tone indicates slot is empty; beep indicates variable in slot.)

5 Set KYK-13/TSEC MODE switch to ON and FILL SELECTOR switch to slot containing variable to be transferred.

6 Press and release handset PTT. One beep can be heard in handset on the press and one on the release. The KYK-13/TSEC indicator will flash. (When using the CVC helmet, place the AUDIO ACCESSORY switch to the FORWARD position and release.)

CAUTION

Do not press the KYK-13/TSEC INITIATE button.

STEP	ACTION
7	Identify loaded variable on TSEC/KY-57 writing surface.
8	Repeat steps 3 through 7 until all desired variables are loaded.
9	Set the KYK-13/TSEC MODE switch to OFF/CK position.
10	Set the TSEC/KY-57 MODE switch to C position and disconnect KYK-13/TSEC from TSEC/KY-57.

TSEC/KY-57

Operating in the SECURE Mode

STEP	ACTION
1	Turn radio set on, set volume to desired level, and select frequency controls operating frequency.
2	Set TSEC/KY-57 MODE switch to C position, FILL SELECTOR switch to slot containing desired cryptonet variable traffic encrypting key (CNV/TEC), POWER switch to ON, and VOLUME control fully clockwise. Alarm should be heard on headset or handset.
3	Clear alarm by pressing and releasing PTT switch. (When using CVC helmet, switch the AUDIO ACCESSORY switch to the FORWARD position and release.)
4	Radio and TSEC/KY-57 are now ready for secure voice operation.

Zeroizing Procedures:

1	To zeroize storage positions 1 through 5 on TSEC/KY-57, pull the FILL SELECTOR switch out and turn to Z 1-5 position.
2	To zeroize all storage positions, pull FILL SELECTOR switch out and turn to Z ALL position.

STEP	ACTION
3	To zeroize KYK-13/TSEC, turn FILL SELECTOR switch to Z ALL position or appropriate slot; hold MODE switch at Z position and press and release KYK-13 initiate button; turn MODE switch to OFF/CHECK position and check parity. **NOTE:** You will be instructed by either your net controller or commander when to zeroize your equipment.

Section V. TSEC/KY-65

Installation in Manpack Operations

STEP	ACTION
1	TSEC/KY-65 Battery Pack (Z-AKG) Installation: a. Check fuse F1 and spare. Replace if necessary. **CAUTION** Check the safety relief valve on the side of the battery pack assembly to ensure proper venting capability. b. Place the TSEC/KY-65 on a flat surface with the POWER connectors on rear panel facing upward. c. Open the compression spring latches at the rear of the TSEC/KY-65. d. Place two BA-4386 batteries into the battery pack ensuring batteries mate with the two three-pronged connectors inside the assembly. e. Place the battery pack on the TSEC/KY-65 making sure both POWER connectors mate. f. Close latches securing the battery pack to the TSEC/KY-65.

STEP	ACTION
2	TSEC/KY-65 Fill Battery Installation:

a. Loosen the four captive screws on the fill battery cover and remove the cover.

WARNING

Under excessive heat, mercury batteries BA-1372/U will explode and spread mercury contamination. Sufficient heat to cause explosion maybe generated by accidental shorting or by incineration. Exercise care when using mercury batteries to prevent accidental shorting. Dispose of mercury batteries by burying them in nonconductive containers.

b. Insert two new BA-1372/U batteries into the battery compartment.

NOTE: Make sure the battery polarities (as marked on the battery) are properly matched with the polarity markings on the battery compartment (+ to +, - to -).

c. Replace the battery cover and tighten the four captive screws.

d. Record on a piece of gummed tape, the date new batteries were inserted. Attach the tape to the TSEC/KY-65 directly to the rear of the standby battery cover plate.

e. Connect cable CX-13168 from RADIO connector of the KY-65 to top AUDIO connector of RT-1209/URC.

f. Connect a handset to the HANDSET connector on lower left front of the KY-65.

TSEC/KY-65

Installation in Vehicle Operations (AN/GRC-193A)

STEP	ACTION
1	Slide the AC/DC power supply Z-AKE onto the back of the TSEC/KY-65 making sure that the power supply and KY-65 connectors mate. Secure the power supply to the KY-65 using the spring clips on the sides of the KY-65.
2	Slide TSEC/KY-65 onto mount and secure it to the mount.
3	Connect the AC/DC power cable to power receptacle (J1) on the rear of the power supply.
4	Connect cable CX-13211/U between the AUDIO handset connector (KY-65) and the AUDIO connector on the Amplifier/Converter AM-6879/URC.
5	Connect the cable CX-13168/U between the UPPER AUDIO connector on the Receiver/Transmitter RT-1209/URC and the RADIO connector on the KY-65.
6	Connect the handset to the HANDSET connector on the front side of the TSEC/KY-65.

TSEC/KY-65

Installation in Vehicle Operations (AN/GRC-213)

STEP	ACTION
1	Disconnect audio cable from receiver/transmitter to amplifier/power supply.
2	Connect cable CX-13168/U to the UPPER AUDIO connector of the receiver/transmitter and to the RADIO connector of the TSEC/KY-65A.

STEP	ACTION
3	Connect cable CX-13211/U to the RADIO connector of the amplifier/power supply and to the HANDSET connector on the TSEC/KY-65.
4	Connect speaker cable on the J-4885/GRC to the SPEAKER connector on the amplifier/power supply.
5	Connect handset H-250/189 to the HANDSET connector on the J-4885/GRC.
6	Connect the loudspeaker LS-454 cable to the SPEAKER connector on the J-4885/GRC.

TSEC/KY-65

Loading Procedures

STEP	ACTION
1	Initial Turn-on of TSEC/KY-65: a. Connect a handset, such as H-250/U and H-189/U, to TSEC/KY-65 HANDSET connector, or to a RADIO AUDIO connector. b. Set TSEC/KY-65 INT BAT/AUDIO/EXT BAT switch to EXT BAT. The meter on the TSEC/KY-65 will register between 12 VDC and 13.5 VDC on the scale. Output voltage below 10.2 volts will cause the TSEC/KY-65 processor to output a battery fail alarm tone. c. Set TSEC/KY-65 OFF/ZEROIZE/STANDBY/ON switch to ON. d. Set TSEC/KY-65 PLAIN/CIPHER switch to CIPHER. e. Turn VOLUME switch to MID-RANGE.

STEP	ACTION
	f. Turn TSEC/KY-65 FILL SELECTOR switch to each fill register position. Unless the fill position has already been filled, a steady alarm tone will be heard.

NOTE: Prior to FILL operations, the local operator should set the DELAY OUT/DELAY IN/SIG CLR switch to the SIG CLR position, transmit to distant station and request that operator to set his DELAY OUT/DELAY IN/SIG CLR switch to the SIG CLR position and, using the VOLUME CONTROL, adjust the volume of the incoming audio signal to obtain a center scale reading on the meter. Request the distant operator transmit to local operator and perform the same procedures as above. This procedure will greatly improve the voice quality of the system.

2 Fill TSEC/KY-65 Using KYK-13/TSEC:

a. Verify KYK-13/TSEC contains the variables in the registers identified on the writing surface as follows:

(1) Set MODE switch to OFF/CK. Set KYK-13/TSEC FILL to REGISTER to be verified.

(2) Press and release KYK-13/TSEC initiate button: indicator light on KYK-13/TSEC will flash if register contains a variable.

Repeat first two steps for each register to be verified.

NOTE: Ensure the rubber grommet is in the KYK-13/TSEC PI connector and the TSEC/KY-65 is in the CIPHER mode.

b. Connect KYK-13/TSEC to TSEC/KY-65 FILL connector, either directly or with a fill cable.

c. Set KYK-13/TSEC FILL SELECTOR switch to REGISTER containing variable to be transferred: Set TSEC/KY-65 FILL SELECTOR switch to REGISTER to be filled.

STEP	ACTION
	d. Set KYK-13/TSEC MODE switch to ON.
	e. Turn TSEC/KY-65 DEL OUT/DEL IN/SIG CLR switch to SIG CLR and release it. Indicator light on KYK-13/TSEC should flash indicating successful transfer of variable. Steady alarm tone from handset should cease.
	f. Repeat (3) through (5) for each of the three TSEC/KY-65 registers to be filled.
	g. Set KYK-13/TSEC MODE switch to OFF/CK and disconnect from TSEC/KY-65.
	h. Replace dust cover on the FILL connector.
3	Fill TSEC/KY-65 Using KOI-18/TSEC:
	a. Connect KOI-18/TSEC to TSEC/KY-65 FILL connector with a fill cable.
	b. Set TSEC/KY-65 FILL SELECTOR switch to register to be filled.
	c. Insert paper tape leader into KOI-18/TSEC IN slot; line up tape feed holes with white dots on KOI-18/TSEC.
	d. Turn TSEC/KY-65 DEL OUT/DEL IN/SIG CLR switch to SIG CLR and release.
	e. Pull paper tape through KOI-18/TSEC at a moderate rate. The cryptoalarm tone in the handset should stop, indicating a successful fill.
	f. Repeat steps (2) through (5) for each TSEC/KY-65 register to be filled.
	g. Disconnect the KOI-18/TSEC from the TSEC/KY-65.
	h. Replace the dust cover on the TSEC/KY-65 FILL connector.

TSEC/KY-65

Operations

STEP	ACTION
1	TSEC/KY-65 Secure Voice Operations:
	a. Set TSEC/KY-65 PLAIN/CIPHER switch to CIPHER. Set FILL SELECTOR switch to desired register.
	b. Set TSEC/KY-65 HF/NON-HF switch to either HF or NON-HF depending upon type of radio set or communications system used.
	c. Press PTT on handset; wait for preamble to stop; talk into handset.
	d. Release PTT on handset; wait for postamble to stop.
	NOTE: Amber light on front of TSEC/KY-65 will flash continuously during receipt of secure voice communications. Meter on the front of the TSEC/KY-65 will indicate the receiving and transmitting audio level. After receiving a cipher test communication, wait until postamble stops before initiating a transmission.
2	TSEC/KY-65 Clear Voice Operations:
	a. Set TSEC/KY-65 PLAIN/CIPHER switch to PLAIN.
	b. The HF/NON-HF switch should have been set by the installer of the TSEC/KY-65. If not, set the switch to HF or NON-HF to correspond with the type of radio set or communications system used.
	c. Press PTT on handset; talk into handset.
	d. Release PTT.

STEP	ACTION
3	**TSEC/KY-65 Standby Operations: Set TSEC/KY-65 OFF/ ZEROIZE STANDBY/ON switch to STANDBY.** **NOTE:** Standby setting is used to enable the TSEC/KY-65 to retain its fill when power to the TSEC/KY-65 from the primary power source (battery pack or vehicle power supply) has been disconnected or interrupted. The TSEC/KY-65 must contain batteries to hold its fill.
4	**TSEC/KY-65 Zeroizing Operations: Pull out and set TSEC/KY-65 POWER switch to OFF Z.**

Section VI. TSEC/KG-84A

Description

The TSEC/KG-84A is a dedicated loop encryption device (DLED). It is used to encrypt/decrypt teletypewriter and digital data traffic on dedicated links. It can be used for local or remote operations and will operate in the DUPLEX and the HALF-DUPLEX modes. Unlike the TSEC\KW-7, which it replaces, the KG-84A will operate in the DUPLEX mode without an additional device. It can operate in the TRANSMIT and RECEIVE modes at the same time.

When used with Radio Teletypewriter Sets AN/GRC-122, AN/GRC-142, AN/VSC-2, and AN/VSC-3, the Installation Kit MK-2488/G must first be installed. Interconnecting Box J-4024/U interfaces the KG-84A with Teletypewriter Sets TT-98/FG, TT-76/GGC, TT-122/TG, and TT-4/TG. For complete wiring details of the KG-84A in radio teletypewriter sets, see appropriate technical manual. Do not attempt to use the KG-84A without Installation Kit MK-2488/GR.

Chapter 5

Operating Procedures
Section I - Radiotelephone Procedures

Phonetic Alphabet

Letter	Word	Pronunciation
A	ALFA	AL FAH
B	BRAVO	BRAH VOH
C	CHARLIE	CHAR LEE OR SHAR LEE
D	DELTA	DELL TAH
E	ECHO	ECK OH
F	FOXTROT	FOKS TROT
G	GOLF	GOLF
H	HOTEL	HOH TELL
I	INDIA	IN DEE AH
J	JULIETT	JEW LEE ETT
K	KILO	KEY LOH
L	LIMA	LEE MAH
M	MIKE	MIKE
N	NOVEMBER	NO VEM BER
O	OSCAR	OSS CAH

Letter	Word	Pronunciation
P	PAPA	PAH PAH
Q	QUEBEC	KEH BECK
R	ROMEO	ROW ME OH
S	SIERRA	SEE AIR RAH
T	TANGO	TANG GO
U	UNIFORM	YOU NEE FORM OR
		OO NEE FORM
V	VICTOR	VIK TAH
W	WHISKEY	WISS KEY
X	XRAY	ECKS RAY
Y	YANKEE	YANG KEY
Z	ZULU	ZOO LOO

Numerical Pronunciation

1. To distinguish numerals from words similarly pronounced, the proword "FIGURES" may be used preceding such numbers.

2. When numerals are transmitted by radiotelephone, the following rules for their pronunciation will be observed:

Numeral	Spoken As
Ø	ZE-RO
1	WUN

2 .....TOO

3 .....TREE

4 .....FOW-ER

5 .....FIFE

6 .....SIX

7 .....SEV-EN

8 .....AIT

9 .....NIN-ER

3. Numbers will be transmitted digit by digit except that exact multiples of thousands may be spoken as such. However, there are special cases, such as anti-air warfare reporting procedures, when the normal pronunciation of numerals is prescribed for example, 17 would then be "seventeen."

Numeral	Spoken As
44	FOW-ER FOW-ER
90	NIN-ER ZE-RO
136	WUN TREE SIX
TIME 1200	WUN TOO ZE-RO ZE-RO
1478	WUN FOW-ER SEV-EN AIT
7000	SEV-EN TOU-SAND
16000	WUN SIX TOU-SAND
812681	AIT WUN TOO SIX AIT WUN

4. The figure "ZERO" is to be written "0," the figure "ONE" is to be written "1" and the letter "ZULU" is to be written "Z."

5. Difficult words may be spelled phonetically using the four-step method. Abbreviations and isolated letters should be phonetisized without the proword "I SPELL."

Radiotelephone Procedures

Prowords Listed Alphabetically

Proword	Meaning
ALL AFTER	The portion of the message to which I have reference is all that which follows _____.
ALL BEFORE	The portion of the message to which I have reference is all that which precedes _____.
AUTHENTICATE	The station called is to reply to the challenge which follows _____.
AUTHENTICATION IS	The transmission authentication of this message is _____.
BREAK	I hereby indicate the separation of the text from other portions of the message.
CORRECT	You are correct, or what you have transmitted is correct.
CORRECTION	An error has been made in this transmission. Transmission will continue with the last word correctly transmitted. An error has been made in this transmission (or message indicated). The correct version is _____. That which follows is a corrected version in answer to your request for verification.
DISREGARD THIS TRANSMISSION-OUT	This transmission is in error. Disregard it. (This proword shall not be used to cancel any message that has been

Proword	Meaning
	completely transmitted and for which receipt or acknowledgement has been received.)
DO NOT ANSWER	Stations called are not to answer this call, receipt for this message, or otherwise to transmit in connection with this transmission. When this proword is employed, the transmission shall be ended with the proword "OUT."
EXEMPT	The addressees immediately following are exempted from the collective call.
FIGURES	Numerals or numbers follow. (Optional)
FLASH	Precedence FLASH. Reserved for initial enemy contact reports on special emergency operational combat traffic originated by specifically designated high commanders of units directly affected. This traffic is to be SHORT reports of emergency situations of vital proportion. Handling is as fast as is humanly possible with an objective time of 10 minutes or less.
FROM	The originator of this message is indicated by the address designation immediately following.
GROUPS	This message contains the number of groups indicated.
IMMEDIATE	Precedence immediate. The precedence reserved for messages relating to situations which gravely affect the security

Proword	Meaning
	of national/allied forces or populace, and which require immediate delivery.
INFO	The addressees immediately following are addressed for information.
I AUTHENTICATE	The group that follows it is the reply to your challenge to authenticate.
I READ BACK	The following is my response to your instructions to read back.
I SAY AGAIN	I am repeating transmission or portion indicated.
I SPELL	I shall spell the next word phonetically.
I VERIFY	That which follows has been verified at your request and is repeated. (To be used as a reply to verify.)
MESSAGE	A message which requires recording is about to follow. (Transmitted immediately after the call.)
MORE TO FOLLOW	Transmitting station has additional traffic for the receiving station.
OUT	This is the end of my transmission to you and no answer is required or expected. (Since OVER and OUT have opposite meanings, they are never used together.)
OVER	This is the end of my transmission to you and a response is necessary. Go ahead; transmit.
PRIORITY	Precedence PRIORITY. Reserved for important messages which must have precedence over routine traffic. This is

Proword	Meaning
	the highest precedence which normally may be assigned to a message of administrative nature.
READ BACK	Repeat this entire transmission back to me exactly as received.
RELAY (TO)	Transmit this message to all addresses (or addresses immediately following this proword). The address component is mandatory when this proword is used.
ROGER	I have received your last transmission satisfactorily.
ROUTINE	Precedence ROUTINE. Reserved for all types of messages which are not of sufficient urgency to justify a higher precedence, but must be delivered to the addressee without delay.
SAY AGAIN	Repeat all of your last transmission. (Followed by identification data means "Repeat _____ (portion indication).")
SERVICE	The message that follows is a service message.
SILENCE	"Cease Transmission Immediately." Silence will be maintained until lifted. (Transmissions imposing silence must be authenticated.)
SILENCE LIFTED	Silence is lifted. (When an authentication system is in force the transmission lifting silence is to be authenticated.)

Proword	Meaning
SPEAK SLOWER	Your transmission is at too fast a speed. Reduce speed of transmission.
THIS IS	This transmission is from the station whose designator immediately follows.
TIME	That which immediately follows is the time or date/time group of the message.
TO	The addressee(s) immediately following is (are) addressed for action.
UNKNOWN STATION	The identity of the station with whom I am attempting to establish communications is unknown.
VERIFY	Verify entire message (or portion indicated) with the originator and send correct version. (To be used only at the discretion of the addressee to which the questioned message was directed.)
WAIT	I must pause for a few seconds.
WAIT OUT	I must pause for longer than a few seconds.
WILCO	I have received your signal, understand it, and will comply. (To be used only by the addressee. Since the meaning of ROGER is included in that of WILCO, the two prowords are never used together.)
WORD AFTER	The word of the message to which I have reference is that which follows _____.

Proword	Meaning
WORD BEFORE	The word of the message to which I have reference is that which precedes _____ .
WORDS TWICE	Communication is difficult. Transmit (ring) each phrase (or each code group) twice. This proword may be used as an order, request, or as information.
WRONG	Your last transmission was incorrect. The correct version is_____ .

Radiotelephone Procedures

Opening a Net (Nonsecure Voice)

NET THIS IS NCS AUTHENTICATE _____
_____ OVER

NCS THIS IS 1ST SUB I AUTHENTICATE _____
AUTHENTICATE _____ _____ OVER

NET THIS IS NCS I AUTHENTICATE _____
AUTHENTICATE _____ _____ OVER

NET THIS IS 2D SUB I AUTHENTICATE _____
AUTHENTICATE _____ _____ OVER

NET THIS IS 3D SUB I AUTHENTICATE _____ OVER

NET THIS IS NCS OUT

Radiotelephone Procedures

Opening a Net (Secure Voice)

NET THIS IS NCS OVER

NCS THIS IS 1ST SUB OVER

NCS THIS IS 2D SUB OVER

NCS THIS IS 3D SUB OVER

NET THIS IS NCS OUT (IF NCS HAS NO TRAFFIC)

or

NET THIS IS NCS THIS IS A DIRECTED NET - OF WHAT PRECEDENCE AND FOR WHOM ARE YOUR MESSAGES OVER (NCS DESIRES CONTROL OF TRAFFIC BEING PASSED).

NOTE: The last letter of the call sign determines the answering order. The stations in a net respond alphabetically, for example, A3D will answer before A2E and A2E will answer before BIF. If two stations in a net have the same last letter, for instance, A1D and A2D, the answering order will be determined by numerical sequence, with the lower number A1D answering first.

Radiotelephone Procedures

Radio Checks

To minimize transmission time, use radio checks sparingly. Transmit only when you have message traffic.

NET THIS IS NCS RADIO CHECK OVER

NCS THIS IS 1ST SUB ROGER OUT

NCS THIS IS 2D SUB WEAK READABLE OVER (2D SUB receives NCS weak)

NCS THIS IS 3D SUB ROGER OUT

NET THIS IS NCS ROGER OUT

Radio Telephone Procedures

Passing Message Traffic

1. A preliminary call will be transmitted when the sending station wishes to know if the receiving station is ready to receive a message.
   1ST SUB THIS IS 2D SUB - (precedence) - OVER
   2D SUB THIS IS 1ST SUB - OVER
   1ST SUB THIS IS 2D SUB - MESSAGE - NUMBER ONE
   PRIORITY TIME 14Ø5ØØZ MAR 87
   FROM COMMANDER'S FULL CALL SIGN 2D SUB TO COMMANDER'S FULL CALL SIGN 1ST SUB
   BREAK TEXT OF MESSAGE BREAK OVER
   2D SUB THIS IS 1ST SUB ROGER OUT
   or
   3D SUB THIS IS 1ST SUB - MESSAGE - OVER
   1ST SUB THIS 3D SUB - OVER
   3D SUB THIS IS 1ST SUB (Sends Message) - OVER
   1ST SUB THIS IS 3RD SUB - ROGER - OUT
2. When communications reception is good and contact has been continuous, a preliminary call is optional.

Radiotelephone Procedures

Station Entering Net

1. The 3d substation was unable to answer when the net was opened and now wishes to report into the net.
   NCS THIS IS 3D SUB - REPORTING INTO NET - OVER
   3D SUB THIS IS NCS AUTHENTICATE ____ ____ OVER
   NCS THIS IS 3D SUB I AUTHENTICATE ____ AUTHENTICATE ____ ____ OVER
   3D SUB THIS IS NCS I AUTHENTICATE ____ OVER
   NCS THIS IS 3D SUB ROGER OUT
2. The 3d substation finds it necessary to enter a net in which it does not normally operate.
   NCS THIS IS 3D SUB REQUEST PERMISSION TO ENTER NET - OVER
   3D SUB THIS IS NCS IDENTIFY YOUR STATION -OVER
   NCS THIS IS 3D SUB REFER TO ____ ____ I AM PREPARED TO AUTHENTICATE - OVER
   3D SUB THIS IS NCS AUTHENTICATE ____ ____ OVER
   NCS THIS IS 3D SUB I AUTHENTICATE ____ OVER
   3D SUB THIS IS NCS PERMISSION TO ENTER NET -OUT

Radiotelephone Procedures

Station Leaving Net

1. When leaving a net in which your station is a substation:
   NCS THIS IS 3D SUB REQUEST PERMISSION TO CLOSE DOWN (Until ____) OVER
   3D SUB THIS IS NCS ROGER OUT
2. When leaving a net in which you have entered, but do not normally operate:
   NCS THIS IS 3D SUB REQUEST PERMISSION TO LEAVE NET - OVER
   3D SUB THIS IS NCS ROGER OUT

Radiotelephone Procedures

Closing a Net (Nonsecure Voice)

NET THIS IS NCS CLOSE DOWN OVER
NCS THIS IS 1ST SUB AUTHENTICATE ___ ___ OVER
NET THIS IS NCS I AUTHENTICATE ___ OVER
NCS THIS IS 1ST SUB ROGER OUT
NCS THIS IS 2D SUB ROGER OUT
NCS THIS IS 3D SUB ROGER OUT

Radiotelephone Procedures

Closing a Net (Secure Voice)

NET THIS IS NCS CLOSE DOWN OVER
NCS THIS IS 1ST SUB ROGER OUT
NCS THIS IS 2D SUB ROGER OUT
NCS THIS IS 3D SUB ROGER OUT

Radiotelephone Procedures

Radiotelephone Message Format

A radiotelephone message consists of three main parts:

1. Heading.
2. Text.
3. Ending.

Components	Elements	Format Line	Format Contents
Heading:			
Procedure		1	Not used.
	a. Call	2 & 3	Stations called - Proword EXEMPT, exempted calls, proword THIS IS -STATION CALLING
	b. Message follows		Proword MESSAGE.

Components	Elements	Format Line	Contents
	c. Transmission identification		Proword NUMBER and station serial number.
	d. Transmission instruction	4	Prowords RELAY TO, READ BACK; DO NOT ANSWER; WORDS TWICE; operating signals; address groups; call signs; plain language designators.
Preamble	a. Precedence; date-time group message instructions.	5	Precedence designation; proword TIME; date and time expressed in digits and one zone suffix; operating signals and proword EXECUTE TO FOLLOW.
Address	a. Originator's sign; originator.	6	Proword FROM originator's address designator.
	b. Action addressee sign.	7	Proword TO action addressee designator.
	c. Information addressee sign; Information addressee.	8	Proword INFO. Information addressees designators.
	d. Exempted addressee sign; exempted addressee.	9	Proword EXEMPT. Exempted addressee designator.
Prefix	Accounting information group count.	10	Accounting symbol; group count; proword GROUPS (GROUP NO COUNT).

SEPARATION		**11**	**Proword BREAK**
Text:			
Text	Subject matter	12	Clear, unclassified, proword SERVICE, and/or internal instructions as appropriate; thoughts or ideas as expressed by originator.
SEPARATION		**13**	**Proword BREAK**
Ending:			
Procedure	a. Time Group	14	Proword TIME. Hours and minutes expressed in digits and zone suffix, when appropriate.
	b. Final Instructions	15	Prowords WAIT, CORRECTION, AUTHENTICATION IS, MORE TO FOLLOW, STATION DESIGNATORS.
	c. Ending Sign	16	Prowords OVER or OUT.

Format Line	**Message**
1	(Not used in radiotelephone procedures).
2	ECHO SIX JULIETT EXEMPT ECHO FIVE ONE ALPHA
3	THIS IS - ECHO SIX JULIETT ONE FOUR - MESSAGE - NUMBER ONE
4	READ BACK -
5	PRIORITY - TIME ONE EIGHT ONE ZERO ONE FIVE ZULU
6	FROM ECHO SIX JULIETT ONE FOUR

Format Line	Message
7	TO SIERRA EIGHT XRAY FOUR FIVE
8	INFO TANGO THREE FOXTROT NINER TWO
9	EXEMPT CHARLIE TWO ECHO FIVE ONE
10	GROUP EIGHT
11	BREAK
12	MOVE YOUR HQ TO HILL ONE FIVE FOUR
13	BREAK
14	NOT USED (See note at end of example).
15	AUTHENTICATION IS BRAVO DELTA
16	OVER

NOTE 1: Any abbreviated words used in the message must be transmitted phonetically, for example, 1st is sent as ONE SIERRA TANGO, or HQ as HOTEL QUEBEC.

NOTE 2: When authorized by proper authority, a classified message, not to include TOP SECRET, may be sent in the clear on a nonsecure circuit. The word CLEAR will appear as the first word of the text. The receiving opera-l mark the message RECEIVED IN THE CLEAR. On secure circuits the word UNCLASSIFIED, CONFIDENTIAL, or SECRET will be transmitted at the first word of the text. The operator uses Format Line 14 to record a time group (4 digits + zone suffix), when no date-time group appears on Format Line 5. The time group represents the time the operator accepted the message for transmission, and is used as a reference in future references to the message.

Section II. Radio Teletypewriter Procedures

Prosigns

Prosign	Meaning	Description
AA	All After	Used to identify a portion of a message either in requesting repetition or in reply to a request for repetition.
AA*	Unknown Station	Used in lieu of a call sign in establishing communications with a station whose call sign is not known or is not recognized.
AB	All Before	Used to identify a portion of a message either in requesting repetition or in reply to a request for repetition.
AR*	End of Transmission	Terminating prosign. End of my transmission. A response is not necessary.
AS*	Wait	When used without a terminating prosign, indicates a short pause. If followed by a terminating prosign, indicates that he is obliged to wait.
B	More to Follow	Used in final instructions; more traffic to follow; if used during a transmission and followed by numeral(s), indicates that total groups indicated is the number sent and more groups are to follow.
BT*	Break	Used to separate the heading and ending from the text.
C	Correction or Correct	Used in format line 15 to correct portions of the message sent incorrectly. When used in procedure or service, message may indicate the transmission is correct or the correct version follows.
CFN	Confirmation	Used to indicate the portion(s) of a message that must be confirmed. Used on format line 14.
DE	This Is	Used only in the call to denote the calling station.
EEEEEEEE	Error	Used to correct errors during transmission only.
E E E E E E E E AR*	Disregard this transmission	Used to cancel a transmission. Can only be used prior to the termination of the transmission.

Prosign	Meaning	Description
F	Do not Answer	Used in transmission instructions; station called will not answer, receipt, or transmit in connection with this transmission.
FM	Originator's Sign	Used to indicate the originator. First prosign used in the address component.
G	Repeat Back	Used in transmission instructions; station indicated is to repeat message exactly as received.
GR	Group Count	Followed by numeral(s) indicates the number of groups in the message.
GRNC	Groups Not Counted	Indicates that the words or groups of the message were not counted.
HM* (3 times)	Emergency Silence	Used to silence station(s). Silence will be maintained until directed to resume.
II	Separative Sign	Separation sign used in CW. Written as a dash.
IMI*	Repeat or I Repeat	May be used to request repetition of portions missed, to indicate the repetition of a difficult portion (CW) or between the transmission of a message being sent twice.
INT*	Interrogatory	Used to give an interrogatory meaning to operating signals or prosigns; precedes a portion of a message when requesting if indicated portion is correct.
INFO	Information Addressee's Sign	Used to indicate addressees that are intended for information only.
IX*	Execute (5 sec Dash)	Signal of execution. (To indicate order of execution in RATT, the word "EXECUTE" is used.)
IX*	Execute to Follow	Used in messages requiring execution.
J	Verify with Originator and Repeat	Used by addressee to request verification of a message or portions of message(s).
K	Invitation to Transmit	Terminating prosign. "End of my transmission." A response is necessary.
NR	Number	Followed by numeral(s) to indicate station serial number.
R	Receipt	Indicates that the transmission was received.

Prosign	Meaning	Description
T	Transmit to	When used, appears in the transmission instructions. a. Used alone; station called transmits to all addressees. b. Followed by call sign(s); station called transmits to call signs following. c. Preceded and followed by call sign(s); station preceding prosign transmits to those following prosigns.
TO	Action Addressee's Sign	Precedes addressee(s) that are to take action on the message.
WA	Word After	Used to identify a portion of a message either in requesting repetition, or in reply to a request for repetition.
WB	Word Before	Used to identify a portion of a message either in requesting repetition or in reply to a request for repetition.
XMT	Exempt	Used to exempt station(s) or addressee(s) from a collective call sign or address.

***These prosigns are overscored and will be sent as one character when used with CW.**

Radio Teletypewriter Procedures

Precedence Prosigns (Interservice Use)

Prosign	Meaning	Description
R	Routine	The precedence to be used for all types of messages which justify transmission by rapid means unless of sufficient urgency to require a higher precedence.
P	Priority	The precedence reserved for messages requiring expeditious action by the addressee(s) and/or furnish essential information for the conduct of operations in progress when ROUTINE will not suffice.

Prosign	Meaning	Description
O	Immediate	The precedence reserved for messages relating to situations that gravely affect the security of national/allied forces or populace, and that require immediate delivery.
Ƶ	Flash	The precedence reserved for initial enemy contact messages or operational combat messages or operational combat messages of extreme urgency. Brevity is mandatory.

NOTE: For more detailed information on precedence prosigns, precedence assignments, and handling instructions, see ACP 121.

Radio Teletypewriter Procedures

Frequently Used Operating Signals

Signal	Question	Answer, Advice, or Order
QRK	What is the intelligibility of my signals (or those of ....)?	The intelligibility of your signals (or those of ...) is .... 1. Bad 4. Good 2. Poor 5. Excellent 3. Fair
QRN	Are you troubled by static?	I am troubled by static... 1. Nil 4. Severely 2. Slightly 5. Extremely 3. Moderately
QRQ	Shall I send faster?	Send faster (... words per minute)
QRS	Shall I send more slowly?	Send more slowly (... words per minute)

Signal	Question	Answer, Advice, or Order
QRT	Shall I stop sending?	Stop sending.
QRU	Have you anything for me?	I have nothing for you.
QRV	Are you ready?	I am ready.
QRX	When will you call me again?	I will call you again at ... hours (on ... kHz (or MHz)).
QSA	What is the strength of my signals (or those of ...)?	The strength of your signals (or those of ...) is ... (1 to 5)
QSL	Can you acknowledge receipt?	I am acknowledging receipt.
QSV	Shall I send a series of V's on this frequency (or on ... kHz (or MHz))?	Send a series of V's on this frequency (or on ... kHz (or MHz)).
QSY	Shall I change to transmission on another frequency?	Change to transmission on another frequency (or on ... kHz (or MHz)).
QSZ	Shall I send each word or group more than once?	Send each word or group twice (or ... times).
QTR	What is the correct time?	The correct time is ... hours.
ZAA		You are not observing proper circuit discipline.
ZAL		I am closing down (until ...) due to ...

Signal	Question	Answer, Advice, or Order
ŻAN		Transmit only messages of ... and above precedence ...
ŻAX		You are ... 1. Causing interference. Listen before sending. 2. Causing interference by inattention to order to wait. 3. Sending at the same time as ... (call sign). 4. Causing delay by slowness in answering. 5. Causing delay by slowness in answering my service or procedure messages. 6. Answering out of turn.
ŻBH		Make preliminary call before transmitting traffic.
ŻBK	Are you receiving my traffic clear?	I am receiving your traffic ... 1. Clear 2. Garbled.
ŻBO	Of what precedence(s)?	I have (or ... has) ... (numeral followed by precedence prosign for each precedence) message(s) for you (or for ...).
ŻBP		Your ... 1. Characters are indistinct. 2. Spacing is bad.
ŻBZ	What is the printing accuracy of my signals (or those of ...)?	The printing accuracy of your signals (or those of ...) is ... 1. Totally corrupt. 2. Very corrupt. 3. Partly corrupt. 4. Occasionally corrupt but acceptable. 5. Perfect - no corruption.
ŻDL		Confirmation ... 1. Was omitted. 2. Differs from text.

Signal	Question	Answer, Advice, or Order
ZEN		This message has been delivered by a separate transmission or by other means. 1. Messenger/courier. 2. Mail.
ZES		Your message ... has been received ... 1. Incomplete. 2. Garbled. Request retransmission immediately following this operating signal.
ZEV	Request you acknowledge message ...	Message (or msg ...) is acknowledged.
ZEX		This is a book message and may be delivered as a single-address message to addressees for whom you are responsible.
ZFD		This message is a suspected duplicate.
ZFG		This message is an exact duplicate of a message previously transmitted.
ZFH		This message is being passed to you for ... 1. Action. 2. Info. 3. Comment.
ZFR		Cancel transmission ... (made under channel or station serial number ...).
ZGE		Send your call sign(s) once (or ... times) on this frequency.
ZGF		Make call signs more distinctly.
ZKA	Who is controlling station (NCS) on this frequency (or kHz (or MHz))?	I am (or ... is) controlling station (NCS) on this frequency (or on ... kHz (or MHz)).
ZKB	Is it necessary to obtain the permission of NCS before transmitting messages?	It is necessary to obtain the permission of the NCS before transmitting messages.
ZKD	Shall I take control of net?	Take control of net.
ZKE		I (or ...) report(s) into circuit (net).

Signal	Question	Answer, Advice, or Order
ŻKJ	May I close down (until...)?	1. Close down (until ...). 2. I am closing down (until ...).
ŻNB	What is authentication of ... 1. Message ... 2. Last transmission. 3. ...?	Authentication (of ...) is ... 1. Message ... 2. Last transmission 3. ...
ŻNC		All transmissions will be authenticated ... 1. On all circuits. 2. On this circuit. 3. On ... frequency.
ŻND		You are using authenticator incorrectly ... 1. Verify authenticator system key. 2. Check authentication of your last transmission.
ŻNE		I am prepared to authenticate.
ŻNR		This message may be forwarded without change by radio or nonapproved circuit.
ŻNY		Do not forward this message unencrypted by radio or nonapproved circuit.
ŻOE	Can you accept message for ...?	Give me your message. I will dispose of it.
ŻRA	How does my frequency check?	Your frequency is ... 1. Correct. 2. Slightly or ... hertz high. 3. Slightly or ... hertz low. 4. Stable on steady mark. 5. Stable on steady space. 6. Unstable. 7. Erratic.

Signal	Question	Answer, Advice, or Order
ZRC	Shall I tune transmitter to ...	Tune your transmitter to ...
	1. Proper frequency.	1. Proper frequency.
	2. Zero beat with your (or ...) transmitter?	2. Zero beat with my (or ...) transmitter.
ZRF	Will you send tuning signal on your present frequency (or on ... kHz (or MHz)) for 1 minute, or until as given?	I am about to send tuning signal on my present frequency (or on ... kHz (or MHz)).
ZUB		At.
ZUE		Affirmative (yes).
ZUG		Negative (no).
ZUI		Your attention is invited to ...
ZUJ		Stand by.
ZWL		No forwarding action to the designation(s) immediately following is required.
ZWN		Correct version of the part of the last message (or message ...) which was sent incorrectly is ... (or will be found in ...).

Radio Teletypewriter Procedures

Machine Functions

Call Signs

NET - A7W

NCS - B6F - CDR 52D INF DIV

SUB - F3D - CDR 1ST BDE 52D INF DIV

SUB - N5J - CDR 2D BDE 52D INF DIV

SUB - E6T - CDR 3D BDE 52D INF DIV

Radio Teletypewriter Procedures

Establishing Radio Teletypewriter Communications (Continuous Tuning Sets) Radio Set AN/GRC-26D & RATT Set AN/GRC-46

(5SP-2CR-1LF) A7W DE B6F ZRC2 INT ZBK K (2CR-1LF)

(5SP-2CR-1LF) B6F DE F3D ZBK1 INT ZBK K (2CR-1LF)

(5SP-2CR-1LF) F3D DE B6F ZBK1 ZUJ AR (2CR-1LF)

(5SP-2CR-1LF) B6F DE N5J ZBK1 INT ZBK K (2CR-1LF)

(5SP-2CR-1LF) N5J DE B6F ZBK1 ZUJ AR (2CR-1LF)

Radio Teletypewriter Procedures

Garbled Transmission Received from E6T

(5SP-2CR-1LF) E6T DE B6F ZBK2 ZRC 2 K (2CR-1LF)

(5SP-2CR-1LF) B6F DE E6T ZBK1 INT ZBK K (2CR-1LF)

(5SP-2CR-1LF) E6T DE B6F ZBK1 ZUJ AR (2CR-1LF)

Radio Teletypewriter Procedures

Establishing Radio Teletypewriter Communications (Digital Tuning Sets)

(5SP-2CR-1LF) A7W DE B6F INT ZBK K (2CR-1LF)

(5SP-2CR-1LF) B6F DE F3D ZBK1 INT ZBK K (2CR-1LF)

(5SP-2CR-1LF) F3D DE B6F ZBK1 ZUJ AR (2CR-1LF)

(5SP-2CR-1LF) B6F DE N5J ZBK1 INT ZBK K (2CR-1LF)

(5SP-2CR-1LF) N5J DE B6F ZBK1 ZUJ AR (2CR-1LF)

(5SP-2CR-1LF) B6F DE E6T ZBK1 INT ZBK K (2CR-1LF)

(5SP-2CR-1LF) E6T DE B6F ZBK1 ZUJ AR (2CR-1LF)

NOTE: ZKB is used in radio teletypewriter communications when the NCS has not been designatedin the SOI or when alternate NCS has assumed command of the net. EKB is used in radio teletype writer communications when the NCS wants to control the net. The NCS may want to control the net when the net has high message traffic. Also, if the net has numerous subs, the NCS may control the net to avoid confusion.

Radio Teletypewriter Procedures

Opening a Net

(5SP-2CR-1LF) A7W DE B6F K (2CR-1LF)

(5SP-2CR-1LF) B6F DE F3D K (2CR-1LF)

(5SP-2CR-1LF) B6F DE N5J K (2CR-1LF)

(5SP-2CR-1LF) B6F DE E6T K (2CR-1LF)

(5SP-2CR-1LF) A7W DE B6F R AR (2CR-1LF)

Radio Teletypewriter Procedures

Opening a Directed Net

(5SP-2CR-1LF) A7W DE B6F ZKB K (2CR-1LF)

(5SP-2CR-1LF) B6F DE F3D K (2CR-1LF)

(5SP-2CR-1LF) B6F DE N5J K (2CR-1LF)

(5SP-2CR-1LF) B6F DE E6T K (2CR-1LF)

(5SP-2CR-1LF) A7W DE B6F R AR (2CR-1LF)

Radio Teletypewriter Procedures

Sequence of Answering

1. Station will answer a net or collective call in alphabetical order.
2. If any station fails to answer in order, the next station waits 5 seconds then answers. we station which failed to answer will wait until all other stations have answered, then answer.
3. If after all other stations have answered, the station missing its turn still does not answer, the NCS waita 5 seconds then initiates a call to that station.

(5SP-2CR-1LF) A7W DE B6F K (2CR-1LF)

Station F3D is supposed to answer, but does not. The next station N5J answers.

(5SP-2CR-1LF) B6F DE N5J K (2CR-1LF)

(5SP-2CR-1LF) B6F DE E6T K (2CR-1LF)

F3D now answers

(5SP-2CR-1LF) B6F DE E6T K (2CR-1LF)

(5SP-2CR-1LF) A7W DE B6F R AR (2CR-1LF)

F3D fails to answer within 5 seconds after the last station answers.

(5SP-2CR-1LF) F3D DE B6F K (2CR-1LF)

4. If the station still fails to answer, the NCS will permit other stations to transmit their traffic.

(5SP-2CR-lLF) A7W XMT F3D DE B6F R AR (2CR-lLF)

Radio Teletypewriter Procedures

Station Entering Opened Net

(5SP-2CR-1LF) B6F DE F3D ZKE K (2CR-1LF)

(5SP-2CR-1LF) F3D DE B6F ZKB QTR 090Z-K (2CR-1LF)

(5SP-2CR-1LF) B6F DE F3D R AR (2CR-1LF)

QTR - Used to allow substation to synchronize time with NCS.

Radio Teletypewriter Procedures

Closing a Net

(5SP-2CR-1LF) A7W DE B6F ZKJ1 K (2CR-1LF)

(5SP-2CR-1LF) B6F DE F3D R AR (2CR-1LF)

(5SP-2CR-1LF) B6F DE N5J R AR (2CR-1LF)

(5SP-2CR-1LF) B6F DE E6T R AR (2CR-1LF)

Teletypewriter Message Format

Parts	Components		Line	Elements
HEADING		PROCEDURE	1	Reserved for tape relay
			2	Call sign of station being called
			3	Station calling & station serial no.
			4	Transmission instructions (T, F, or G)
	Preamble		5	Precedence, date-time group & message instructions
		ADDRESS	6	Originator's prosign (FM), designation & office symbol
			7	Action Addressee's prosign (TO) & designation
			8	Information addressee's prosign info & designation
			9	Exempted addressee's prosign (XMT) & designation
	Prefix		10	Accounting symbol (DA) & group count (GR 23 or GRNC)
Separation			11	BT
Text	Textual		12	Internal instructions & subject matter
Separation			13	BT
ENDING		PROCEDURE	14	Confirmation (CFN) & time group when appropriate
			15	Operating signals (ZNB), filing time, & final instructions (B, AS, or C (IMI USE) with prosign F)
			16	Terminating prosign (K or AR)

Radio Teletypewriter Procedures

Teletypewriter Repetition Procedures

1. Operators must use the following rules to request repetition in the heading of a message:

a. Rule 1.

(1) When one element is garbled, request repetition of prosign before to prosign after the garbled element.

Example:

If the originator's designation is garbled request:

C9L DE A0K IMI FM TO TO K

(2) To respond to a request for a repetition, the operator must always call the station requesting the IMI, identify what he is giving, and then give the portion requested.

Example:

A0K DE C9L

FM TO TO

FM CDR FT LEE//ATCP-A//

TO K

b. Rule 2.

(1) When more than one element from a single component is garbled, request the entire component. (Example assumes two or more errors in the address component.)

Request:

A0K DE C9L IMI FM TO GRNC K

(2) Response:

C9L DE A0K

FM TO GRNC

FM A0K

TO B9V06

INFO M2N03

DA GRNC K

c. Rule 3.

(1) When elements from more than one component are garbled in the heading, request the entire heading, all before break.

Request:

A0K DE C9L IMI AB BT K

(2) Response.

C9L DE A0K

AB BT

C9L

DE AOK NR1

R 2413002 Nov 83

FM A0K23

TO C9L06

BT K

2 Repetition(s) in the text.

a. If the entire text is garbled, request repetition of all after the BT.

(1) Request:

B9V DE M2N IMI AA BT K

(2) Response:

M2N DE B9V

AA BT

TEXT

BT

13/1030Z

K

b. When one single word in a plain language text is garbled, request repetition using the prosign WB or WA using the shortest word as reference point.

(1) Request:

M2N DE B9V IMI WB TO K

(2) Response:

B9V DE M2N WB TO MEN K

c. When two or more consecutive words are garbled in the text, request repetition from the correct word before the garbled portion to the first correct word after the last part of the garbled portion.

(1) Request:

M2N DE B9V IMI SEND TO HILL K

(2) Response:

B9V DE M2N SEND TO HILL SEND 15 MEN TO HILL K

d. When one single group in a coded text message is garbled, request repetition using the numerical number which identifies that particular group.

(1) Request

B9V DE M2N IMI 3 K

(2) Response:

M2N DE B9V 3 DCXEY K

e. When three or more consecutive groups in a coded text message are garbled, request repetition from the first garbled group to the last garbled group.

(1) Request:

B9V DE M2N IMI 7 TO 9 K

(2) Response:

M2N DE B9V 7 TO 9 ZBHVE IAKNM GPRMN K

f. When the ending of a message is garbled, request repetition of everything after the last word or coded group in the text.

(1) Request

(Plain language text)

M2N DE B9V IMI AA AN/FGC-25 K

(2) Response:

(Plain language text)

B9V DE M2N

AA AN/FGC-25

B T

CFN AN/FGC-25

13/1630Z

K

(3) Request:

(Coded group text)

M2N DE B9V IMI AA 6 K

(4) Response:

(Coded group text)

B9V DE M2N

AA6

B T

13/1745Z

K

Radio Teletypewriter Procedures

Teletypewriter Interrogation Procedures

1. There are five portions of a message in which the receiving operator will normally interrogate. Use the prosign INT followed by the item to be questioned. Interrogate on the basis of what you believe to be correct.

Examples:

(1) Questioning the date-time group.

B9V DE M2N INT 212205Z K

(2) Questioning the group count.

B9V DE M2N INT GR7 K

(3) Questioning words or groups in the text.

B9V DE M2N INT WA HILL CHARLIE K (Plain language text)

B9V DE M2N INT 9 XYZCP K (Coded text)

(4) Questioning the filing time.

B9V DE M2N INT 21/2220Z K

2. When the item questioned is correct, the simple response is _____ DE _____ C K.

3. When the item questioned was interrogated incorrectly, the response must be _____ DE _____ C (with the correct version) K.

Example:

B9V DE M2N INT 9 XYZCP K (Group 9 interrogated incorrectly)

M2N DE B9V C 9 XYICB K

4. Interrogating the group count of a coded text message, the following separate steps must be taken if the group count is questioned incorrectly. Use sample message:

Sample Message

M2N

DE B9V NR1

GR6

BT

ASDFG UIOPL ERNBV ZASKQ HGKWE JIQOK

BT

K

Example:

B9V DE M2N INT GR6 K

M2N DE B9V C K

(Group count question correctly)

B9V DE M2N INT GR5 K

M2N DE B9V GR6 BT A U EZH J BT K

Group count was questioned incorrectly. The automatic transmission reply discloses the correct groups are six (GR6) and requests the receiving operator to check each group received with the six letter in the automatic transmission to see which group was missed in receiving coded message. Finding out what group was missed, the receiving operator must request a repetition (IMI) for that group before receipting for message. (See Figure 5-l.)

ALFA (AL-FAH)	BRAVO (BRAH-VOH)	CHARLIE (CHAR-LEE)	DELTA (DELL-TAH)	ECHO (ECK-OH)
FOXTROT (FOKS-TROT)	GOLF (GOLF)	HOTEL (HOH-TELL)	INDIA (IN-DEE-AH)	JULIETT (JEW-LEE-ETT)
KILO (KEY-LOH)	LIMA (LEE-MAH)	MIKE (MIKE)	NOVEMBER (NO-VEM-BER)	OSCAR (OSS-CAH)
PAPA (PAH-PAH)	QUEBEC (KEH-BECK)	ROMEO (ROW-ME-OH)	SIERRA (SEE-AIR-RAH)	TANGO (TANG-GO)
UNIFORM (YOU-NEE-FORM)	VICTOR (VIK-TAH)	WHISKEY (WISS-KEY)	XRAY (ECKS-RAY)	YANKEE (YANG-KEY)
ZULU (ZOO-LOO)	WUN	TOO	TREE	FOW-ER
FIFE	SIX	SEV-EN	AIT	NIN-ER
		ZE-RO		

Figure 5-1. Hand printing and phonetic alphabet.

Section III. Radiotelegraph Procedures

Code Characters

Letter	Phonetic Name	Vocal Imitation
A	ALFA	di DAH
B	BRAVO	DAH di di dit
C	CHARLIE	DAH di DAH dit
D	DELTA	DAH di dit
E	ECHO	dit
F	FOXTROT	di di DAH dit
G	GOLF	DAH DAH dit
H	HOTEL	di di di dit
I	INDIA	di dit
J	JULIETT	di DAH DAH DAH
K	KILO	DAH di DAH
L	LIMA	di DAH di dit
M	MIKE	DAH DAH
N	NOVEMBER	DAH dit
0	OSCAR	DAH DAH DAH
P	PAPA	di DAH DAH dit
Q	QUEBEC	DAH DAH di DAH
R	ROMEO	di DAH dit
S	SIERRA	di di dit
T	TANGO	DAH
U	UNIFORM	di di DAH
V	VICTOR	di di di DAH
W	WHISKEY	di DAH DAH
X	XRAY	DAH di di DAH
Y	YANKEE	DAH di DAH DAH
Z	ZULU	DAH DAH di dit
1	WUN	di DAH DAH DAH DAH
2	TOO	di di DAH DAH DAH
3	TREE	di di di DAH DAH
4	FOW-er	di di di di DAH
5	FIFE	di di di di dit

6	SIX	DAH di di di dit
7	SEV-en	DAH DAH di di dit
8	AIT	DAH DAH DAH di dit
9	NIN-er	DAH DAH DAH DAH dit
Ø	ZE-RO	DAH DAH DAH DAH DAH

Radiotelegraph Procedures

Prosigns

a. Prosigns are one or more letters, characters, or combination thereof, used to facilitate communications by conveying, in a condensed standard form, certain frequently used orders, instructions, requests, and information relating to communications.

b. The following is a complete list of prosigns authorized for military use on radiotelegraph circuits. An overscore (a line over two or more letters) means the overscored letters are transmitted as a single character; that is, without a pause between letters.

Prosign	Meaning
$\overline{AA}$	Unknown station
AA	All after
AB	All before
$\overline{AR}$	End of transmission
$\overline{AS}$	Wait
B	More to follow
$\overline{BT}$	Break
C	Correct (or correction)
DE	From
EEEEEEEE	Error
F	Do not answer
FM	Originator's designator follows
G	Repeat back
GR	Group count

Prosign	Meaning
GRNC	Group not counted
HM (3 times)	Emergency silence
II	Separative sign
IMI	Repeat
INFO	Information addressee(s), designators follow
INT	Interrogative
IX	Execute to follow
IX (5 sec dash)	Executive signal
J	Verify with originator and repeat
K	Invitation to transmit
NR	Number
O	Immediate
P	Priority
PT	Call sign follows
R	Receipt or Routine
T	Transmit to
TO	Action addressee(s), designators follow
WA	Word after
WB	Word before
XMT	Exempted addressee(s), designators follow
Z	Flash

Radiotelegraph Procedures

Operating Signals

a. Operating signale are three-letter eignale used to expedite communications. They start with the letter Q or the letter Z and convey frequently used ordera, requests, and information relating to communications. Examples are QSA, QSY, ZEV, and ZKJ.

(1) When preceded by the prosign INT, they form a request or ask a queetion; for example, INT QSA means what is the strength of my signal?

(2) When used alone, they convey an order or make a positive statement. When giving an answer, advice, or order, an operating signal may convey a different meaning by changing the suffix (using QSA); for example, the strength of your signal is–

QSA1 - scarcely perceptible
QSA2 - weak
QSA3 - fairly good
QSA4 - good
QSA5 - very good

b. More commonly used operating signals:

(1) QSY - Change to transmission on another frequency (or _____ frequency).

(2) QTR - Correct time is _____ hours.

(3) ZDK - Following repetition of _____ is made in accordance with your request.

(4) ZEV - Message _____ is acknowledged.

(5) ZGE - Send your call sign(s) once (or _____ times) on this frequency.

(6) ZKA - I am the NCS on this frequency.

(7) ZKB - It is necessary to obtain the permission of the controlling station before transmitting messages.

(8) ZKD - Take control of net.

(9) ZKE - I report into circuit.

(10) ZKJ1 - Close down _____ 2. I am closing down.

(11) ZNB - Authentication is _____ .

(12) ZUE - Affirmative (yes).

(13) ZUG - Negative (no).

(14) ZUJ - Stand by.

Radiotelegraph Procedures

Opening a CW Net Using Authentication (For digital tuning radio sets such as the AN/GRC-106 and AN/PRC-70/74)

NET DE NCS ZKB $\overline{\text{INT}}$ ZNB ____ ____ K

NCS DE 1ST SUB ZNB ____ ____ $\overline{\text{INT}}$ ZNB ____ ____ K

NET DE NCS ZNB ____ ____ $\overline{\text{INT}}$ ZNB ____ ____ K

NET DE 2D SUB ZNB ____ ____ $\overline{\text{INT}}$ ZNB ____ ____ K

NET DE 3D SUB ZNB ____ ____ K

NET DE NCS R $\overline{\text{AR}}$

NOTE: If circuit conditions warrant it (for example, weak or poor reception), the NCS may have call signs repeated twice. The operating signal ZGE2 will be used for this purpose.

Radiotelegraph Procedures

Tuning Station on a Net (For continuous tuning radio sets such as the AN/GRC-19, AN/GRC-46, and AN/GRC-26D)

NET DE NCS ZRF ZRC2... (Call sign repeated for 20 seconds then depress key for 10 seconds $\overline{\text{AR}}$)

(After a pause to allow stations to tune their equipment)

NET DE NCS ZGE2 __ Send your call sign ____ times)
Stations answer

NCS DE CALL SIGN CALL SIGN K (1ST SUB)

NCS DE CALL SIGN CALL SIGN K (2D SUB)

NCS DE CALL SIGN CALL SIGN K (3D SUB)

All stations on frequency except 3D SUB who is 4 kHz low, NCS transmits:

1ST SUB, 2D SUB DE NCS ZRA1 K

NCS DE 1ST SUB R $\overline{\text{AR}}$

NCS DE 2D SUB R $\overline{\text{AR}}$

NCS transmits:

3D SUB DE NCS ZRA3, 4 K NCS DE 3D SUB R $\overline{\text{AR}}$

(3D SUB readjusts his transmitter and asks NCS how his frequency checks)

NCS DE 3D SUB $\overline{\text{INT}}$ ZRA K

(NCS replies giving further tuning instructions if necessary, or states your frequency is correct)

3D SUB DE NCS ZRA1 $\overline{\text{AR}}$

NOTE: After tuning is complete, NCS opens the net using authentication.

Radiotelegraph Procedures

Making a Free Net a Directed Net

NET DE NCS ZKB K

NCS DE 1ST SUB R $\overline{\text{AR}}$

NCS DE 2D SUB R $\overline{\text{AR}}$

NCS DE 3D SUB R $\overline{\text{AR}}$

Radiotelegraph Procedures

Making a Directed Net a Free Net

NET DE NCS ZUG ZKB K

NCS DE 1ST SUB R $\overline{\text{AR}}$

NCS DE 2D SUB R $\overline{\text{AR}}$

NCS DE 3D SUB R $\overline{\text{AR}}$

Radiotelegraph Procedures

Closing a CW Net Using Authentication

NET DE NCS ZKJ1 K

NCS DE 1ST SUB $\overline{\text{INT}}$ ZNB ____ ____ K

NET DE NCS ZNB ____ ____ K

NCS DE 1ST SUB R $\overline{\text{AR}}$

NCS DE 2D SUB R $\overline{\text{AR}}$

NCS DE 3D SUB R $\overline{\text{AR}}$

Radiotelegraph Procedures

Closing a CW Net Using Authentication (When closing for a certain period of time)

NET DE NCS ZKJ1 1500Z K

NCS DE 1ST SUB $\overline{\text{INT}}$ ZNB ____ ____ K

NET DE NCS ZNB ____ ____ K

NCS DE 1ST SUB R $\overline{\text{AR}}$

NCS DE 2D SUB R $\overline{\text{AR}}$

NCS DE 3D SUB R $\overline{\text{AR}}$

NOTE: In CW operation, the response for authentication is repeated twice, as in ZNB ___ ___ .

Radiotelegraph Procedures

Radiotelegraph Message Format

All message PARTS and a majority of the COMPONENTS and ELEMENTS have a standard arrangement or sequential order of appearance. All format lines do not necessarily appear in every message, however, when used, they will be in the order shown.

PARTS COMPONENTS	ELEMENTS	FORMAT LINE	CONTENTS
		1	Not used.
	Called Station(s)	2	Station(s), called, prosign XMT and exempted call signs.
	Calling Station	3	Prosign DE and call sign of station calling: Serial number (transmission identification).
PROCEDURE			Prosign NR followed by a number or a combination of letters and numbers.
	Transmission Instructions	4	Prosigns F, G, T; operating signals; call signs, address groups, plain language address designators, AIGS, routing indicators.
	Precedence	5	Precedence Prosign.

PARTS COMPONENTS	ELEMENTS	FORMAT LINE	CONTENTS
	Date-time group		Date and time expressed in digits, and zone suffix followed by month indicated by first 3 letters, and if required by National Instructions, the year indicated by the last 2 digits.
HEADING PREAMBLE	Message Instructions		Operating signals and prosign IX.
	Originator's Prosign	6	Prosign FM _____.
	Originator		Originator's designator (call sign, address group, plain language address designator).
	Action addressees prosign	7	Prosign TO.
ADDRESS	Action addressees		Action addressees designators (call signs, address groups, plain language address designators, AIGs, routing indicators.)
	Information addressees prosign	8	Prosign INFO.

PARTS COMPONENTS	ELEMENTS	FORMAT LINE	CONTENTS
	Information addressees		Information addresses designators (call signs, address groups, plain language address designators, AIGs, routing indicators.)
	Exempted addressees prosign	9	Prosign XMT.
	Exempted addressees		Exempted addressees designators (call signs, address groups, plain language address designators.)
PREFIX HEAD-ING	Accounting information group count	10	Accounting symbol, prosign GR (No. of groups). GRNC.
SEPARATION		**11**	**Prosign BT**

PARTS COMPONENTS	ELEMENTS	FORMAT LINE	CONTENTS
	Subject matter	12	UNCLASS, or appropriate classification, SVC, internal instructions and appropriate textual manner.
TEXT TEXT			

SEPARATION		**13**	**Prosign BT**
	Time Group	14	Hours and minutes expressed in digits and zone suffix.
PROCEDURE	Final Instructions	15	Prosigns $\overline{AS}$, B, C, $\overline{IMI}$, $\overline{IX}$. 5 sec dash Operating signals, station designators.
ENDING	Ending sign	16	Prosign K, $\overline{AR}$.

FORMAT LINE	MESSAGE
2	A2D
3	DE B9V NR1
5	P 1Ø1215Z JAN 79
6	FM B9VØ6
7	TO A2DØ6
11	BT
12	REQUEST LOGISTIC SUPPORT ASAP
13	BT
15	1Ø/122ØZ
16	K

Radiotelegraph Procedures

Radiotelegraph Message Repetition Procedures (Identification of Parts or Portions of Messages)

The following rules for identifying the parts or portions of messages are to be followed:

a. The heading. Identify by—

- All before prosign.
- All after prosign.
- Prosign to prosign.

b. Plain language text. Identify by–

- BT to word.
- Word to word.
- Prosign WA and/or WB.
- Prosign AA and/or AB.

NOTE: When a word appears more than once, that word used as an identity applies to the first appearance. Reference to subsequent appearance of the word must be further identified by means of adjacent words.

c. Coded groups. Identify by—

- Group number individually.
- Group number to group number.
- All after group number.

Radiotelegraph Procedures

Repetition After Receipt

After receipt for a message has been obtained, all requests for repetition must be in the form of a new message.

REQUEST:

C7V DE H2D INT ZDK 231427Z AUG 78 K

RESPONSE:

H2D DE C7V ZDK 231427Z AUG 78 -

(Send entire message)

Radiotelegraph Procedures

Verification

a. Requests for verifications are initiated by addressee.

REQUEST

W6C DE B6F J 241255ZNOV 83 K

b. After verifying with originator.

RESPONSE:

B6F DE W6C C 241255Z NOV 83 -
B6F DE W6C NR1
R 241255Z NOV 83.
BT
SEND TROOPS TO POINT BRAVO
BT
K

Radiotelegraph Procedures

Acknowledgements

a. Request for acknowledgement is initiated by originator addressee.

Example:

C2S DE M9V $\overline{\text{INT}}$ ZEV 121340Z AUG 78 K

C2S transmits:

M9V DE C2S $\overline{\text{AS}}$ $\overline{\text{AR}}$

b. C2S receiving permission from the addressee to acknowledge the message transmits:

M9V DE C2S ZEV 121230Z AUG 78 K

M9V transmits:

C2S DE M9V R $\overline{\text{AR}}$

Section IV. NRI Calls

a. Calls originating from a telephone subscriber.

Example:

Station	Swbd Name	Radio Call Sign
16th Bn	SHAMROCK	
NRI Op	SHAMROCK 134	W6T81
16th Bn S1	SHAMROCK 114	W6T71
16th Bn Cdr	SHAMROCK 106	W6T46

(1) Telephone subscriber rings switchboard.

(2) Switchboard operator connects operator jack to callers drop and answers with “SHAMROCK, may I help you?”

(3) TS --- “Give me SHAMROCK 134 please.”

(4) SBO --- SHAMROCK connects plug from callers line pack to line jack marked 134 and rings.

(5) NRI OP --- On handset. “SHAMROCK 134 may I help you?”

(6) TS --- “This is SHAMROCK 114 I would like to speak to SHAMROCK 106.”

(7) NRI OP --- “SHAMROCK 114 I will call you back.” Determines call sign and frequency of requested party from SOI and switches to that frequency.

(8) NRI OP --- “W6T46 this is W6T81 over.”

(9) DS --- “W6T81 this is W6T46 over.”

(10) NRI OP --- “W6T46 this is W6T81 call me on my frequency.”

(11) DS --- “W6T81 this W6T46 roger out.”

(DISTANT STATION AND NRI OPERATOR CHANGE TO THE NRI FREQUENCY.)

(12) DS -- “W6T81 this is W6T46 over.”

(13) NRI OP --- “W6T46 this is W6T81 stand by for a call from W6T71 over.”

(14) DS --- “W6T81 this is W6T46 roger out.”

(NRI OPERATOR SWITCHES FUNCTION SWITCH TO TELEPHONE R POSITION MOMENTARILY TO RING SWITCHBOARD.)

(15) SBO --- “SHAMROCK, may I help you?”

(16) NRI OP --- “Give me SHAMROCK 114 please.”

(17) SBO --- SHAMROCK connects plug from 134 to 114 and rings.

(18) TS --- “SHAMROCK 114 may I help you?”

(19) NRI OP --- “This is SHAMROCK 134. I have your call completed. Your call sign is W6T71. You will be speaking to W6T46. Use strict radiotelephone procedure at all times. Do you have any questions?’

(20) TS --- (yes or no. If any questions ask.)

(21) NRI OP --- (If there are questions answer them and ask “are there any other questions?” When the TS answers “no,” continue call.)

(22) NRI OP --- “Wait 5 seconds then go ahead with your call.” (Switch FUNCTION switch to radio T.)

(23) TS --- “W6T46 this is W6T71 over.”

(24) DS --- “W6T71 this is W6T46 over.”

(25) TS --- “W6T46 this is W6T71 roger out.”

(WHEN CALL IS COMPLETED, NRI OPERATOR RINGS OFF SWITCHBOARD.)

b. Calls originating from a radio station.

(1) DS --- “W6T81 this is W6T46 over.”

(2) NRI OP --- “W6T46 this is W6T81 over.”

(3) DS --- “W6T81 this is W6T46 I would like to speak with W6T71 over”.

(4) NRI --- “W6T46 this is W6T81 stand by out.”

(5) NRI OP switches FUNCTION switch to TELEPHONE R and rings switchboard.

(6) SBO --- “SHAMROCK, may I help you?”

(7) NRI OP -- “Give me SHAMROCK 114 please.”

(8) SBO --- Connects plug from 134 to 114 and rings.

(9) TS --- “SHAMROCK 114 may I help you?”

(10) NRI OP --- “This is SHAMROCK 134. Standby for an NRI call from SHAMROCK 106. Your call sign is W6T71. You will be speaking to W6T46. Use strict radiotelephone procedure at all times. Do you have any questions? Standby please.”

(11) NRI OP --- If no questions switch FUNCTION switch to RADIO T.

(12) NRI OP --- “W6T46 this is W6T81 over.”

(13) DS --- “W6T81 this is W6T46 over.”

(14) NRI OP --- “W6T46 this is W6T81 I have your call completed. Go ahead with your call.”

(15) DS --- “W6T71 this is W6T46 over.”

(16) TS --- “W6T46 this is W6T71 over.”

(17) DS --- “W6T71 this is W6T46 out.”

(WHEN CALL IS COMPLETED, NRI OPERATOR RINGS OFF SWITCHBOARD.)

Section V. Operator Number Sheet and Circuit Log

Operator Number Sheet

Step	Action (All log entries will be in ink or indelible pencil)
1	Fill out heading to include:
	a. Station call.
	b. Net call.
	c. Date.
	d. Other station calls.
2	Record messages sent:
	a. Assign next unused number in column(s) of stations to whom message is being sent.
	b. Draw diagonal line through number.
	c. Enter message date-time group and operator's initials.
3	Record messages received:
	a. Draw diagonal line through the number which corresponds with the station serial number of the message received. Messages transmitted under multiple or collective calls will have station serial numbers for each station intended to receive the message. When a collective call is used, the station serial numbers will be arranged in the same order as the call is to be answered. When a multiple call is used, the station serial numbers will be arranged in the order called.
	b. Enter message date-time group and operator's initials in appropriately numbered space.

Step	Action (All log entries will be in ink or indelible pencil)

NOTE: A mistake will not be erased. A horizontal line will be drawn through the incorrect entry and the number that precedes the corresponding number in the next series of numbers. A vertical line will then be drawn down the center of the column between the horizontal lines and the operator will initial through it. The corrected entry will be entered on the line that corresponds to the number on which the incorrect entry was made. (See Figure 5-2.)

OPERATOR'S NUMBER SHEET

For use of this form, see FM 24-18; proponent agency is US Army Training and Doctrine Command.

Check off both sent and received numbers immediately and enter Date-Time Group and personal sign. Strike out word not applicable in heading "Sent/Received." "Other Stations Call" may be entered in "Sent/Received" block if only one column is required.

STATION CALL	NET CALL	DATE
86F	C4T	15 JAN 84
OTHER STATIONS CALL		
B9V	L2N	N5J

SENT ~~REC'D~~	~~SENT~~ REC'D	SENT ~~REC'D~~	~~SENT~~ REC'D	SENT ~~REC'D~~	~~SENT~~ REC'D
1 1508357cm	1 1508152cm	1 1509202cm	1 1509502cm	1	1 1508152cm
2 1509002cm	2	2	2 1511002cm	2	2
3 1509152cm	3	3	3	3	3
4 1509202cm	4	4	4	4	4
5 1508352cm	5 cm	5	5	5	5
6	6	6	6	6	6
7	7	7	7	7	7
8	8	8	8	8	8
9 cm	9	9	9	9	9
0	0	0	0	0	0
1	1 1507152cm	1	1	1	1
2	2 1508102cm	2	2	2	2
3	3	3	3	3	3
4	4	4	4	4	4
5 1509352cm	5	5	5	5	5
6	6	6	6	6	6
7	7	7	7	7	7
8	8	8	8	8	8
9	9	9	9	9	9
0	0	0	0	0	0

SAMPLE

DA FORM 1 OCT 73 4158 Replaces DA Form 11-53, 1 JUN 58, which will be used.

Figure 5-2. Operator number sheet.

Operator Number Sheet and Circuit Log

Circuit Log

Step	Action
1	Fill out the heading to include: a. Station, channel and/or net call. b. Date.
2	First entry should include: a. Time in local or Z time to include zone suffix. b. Operator's initials. c. Rank, name, and words ON DUTY. PRINTED (ALL ENTRIES MUST BE LEGIBLE!)
3	Log time of opening and closing net, causes of delays on circuit, frequency adjustment and changes, and unusual occurrences such as procedure and security violations.
4	Operator will enter his signature when he is relieved followed by the words OFF DUTY. (See Figure 5-3.) NOTE: Mistakes will not be erased. A single line will be drawn through incorrect entry, and the operator will initial above it. Then enter the correct entry adjacent to it.

LOG

Enter opening and closing time, frequencies, frequency checks and frequency changes, traffic delays and any incidents or conditions affecting circuit efficiency. Remarks need not be confined to one line.

STATION—(CHANNEL)—NET *(Strike out words not applicable.)* DATE

B6F YOUR STATION'S CALL SIGN C4T NET CALL SIGN 15 JAN 84

TIME	OPERATOR'S SIGN	REMARKS
0700Z	CM	PFC CHARLES A. MILLER ON DUTY
0702Z	CM	C4T DE B6F INT ZBK K
		B6F DE N5J ZBK1 INT ZBK K
		N5J DE B6F ZBK1 ZUJ AR
		B6F DE L2N ZBK1 INT ZBK K
		L2N DE B6F ZBK1 ZUJ AR
		B6F DE B9V ZBK1 INT ZBK K
0709Z	CM	B9V DE B6F ZBK1 ZUJ AR
0710Z	CM	C4T DE B6F K
		B6F DE N5J K
		B6F DE L2N K
		B6F DE B9V K
0712Z	CM	C4T DE B6F R AR
0730Z	CM	B6F DE B9V P K
		B9V DE B6F K
		B6F DE B9V NR[illegible]
0745Z	CM	B9V DE B6F R AR
0925Z	CM	B6F DE N5J P K
		N5J DE B6F K
		B6F DE N5J NR1 P 150815Z JAN84
		N5J DE B6F 1M1 K
0900Z	CM	N5J DE B6F R AR
0901Z	CM	B6F DE B9V R K
		B9V DE B6F K
		B6F DE B9V NR2 R 150800Z JAN84
0922Z	CM	B9V DE B6F R AR
0930Z	CM	L2N DE B6F O K
		B6F DE L2N K
		L2N DE B6F NR1 O ~~150930Z~~ CM 150920Z JAN84
0940Z	CM	~~L2N~~ CM B6F DE L2N R AR

RANK, FIRST NAME, MIDDLE INITIAL, LAST NAME AND ON DUTY TO BE PRINTED.

SAMPLE

ESTABLISHING COMMUNICATION AND NET OPENING PROCEDURE WILL BE ENTERED IN THEIR ENTIRETY.

REPETITIONS ARE NOT NORMALLY RECORDED IN THE CIRCUIT LOG, BUT AN ENTRY MAY BE NECESSARY TO SHOW CAUSE OF DELAY.

MESSAGES ARE NOT NORMALLY ENTERED IN THEIR ENTIRETY. ENTER CALL SIGNS, MSG NUMBER, PRECEDENCE, AND DTG.

MISTAKES ON THE LOG WILL BE LINED THROUGH ONCE AND INITIALED. LINES WILL NOT BE SKIPPED.

Figure 5-3. Circuit log (reverse side of operator number sheet).

LOG

Enter opening and closing time, frequencies, frequency checks and frequency changes, traffic delays and any incidents or conditions affecting circuit efficiency. Remarks need not be confined to one line.

STATION ~~CHANNEL~~ NET (Strike out words not applicable.) B6F C4T

DATE 15 JAN 84

TIME	OPERATOR'S SIGN	REMARKS
		ANY UNUSUAL CIRCUIT CONDITIONS WILL BE ENTERED IN THE LOG.
0945Z	CM	POWER FAILURE AT B9V
0956Z	CM	POWER RESTORED AT B9V GEN. MALFUNCTION
		WHEN THE NCS LEAVES THE NET, HE MUST PASS CONTROL TO THE ALTERNATE, WHO MUST THEN NOTIFY THE NET.
1010Z	CM	N5J DE B6F ZKJ2 ZKD K
		B6F DE N5J R AR
1011Z	CM	C4T DE N5J Z KAK
		N5J DE L2N R AR
		THE NCS RESUMES CONTROL OF THE NET.
1013Z	CM	N5J DE B9V R AR
1030Z	CM	C4T DE B6F ZKAK
		B6F DE N5J R AR
		B6F DE L2N R AR SAMPLE
1032Z	CM	B6F DE B9V R AR
1033Z	CM	B9V DE B6F R K
		B6F DE B9V K
		B9V DE B6F NR1 R 150825Z JAN84
1050Z	CM	B6F DE B9V R AR
		TIME WILL BE ENTERED IN ZULU OR LOCAL TIME TO INCLUDE ZONE SUFFIX.
		THE MESSAGE DTG WILL BE ENTERED IN THE APPROPRIATE COLUMN ON THE OPERATOR'S NUMBER SHEET ON THE REVERSE SIDE.
1100Z	CM	C4T DE B6F ZKJ1 K
		B6F DE N5J R AR
		B6F DE L2N R AR
1103Z	CM	B6F DE B9V R AR
1104Z	CM	Charles A. Miller - OFF DUTY
		THE OPERATOR WILL ENTER SIGNATURE AND WORDS OFF DUTY.

Figure 5-3. Circuit log (reverse side of operator number sheet (continued)).

Section VI. Electronic Warfare

Jamming

a. Spark jamming. Simplest and most easily produced of all jamming signals. To the operator, it sounds like a loud burst of noise of short duration and high intensity, usually repeated at a rapid rate. Because of the rapid repetition and time required for the receiver, earphones, and human ear to recover from the loud burst of noise, the spark jamming signal is very efficient.

b. Random noise jamming. Most effective and dangerous type of communications jamming, because the operator may mistake it for receiver or atmospheric noise and fail to report it. This jamming sounds like normal interference that is heard when the gain of the receiver is turned up high and the receiver is not tuned to a signal.

c. Sweep-through jamming. A signal that is swept back and forth across a frequency band at a relatively rapid rate. At low speeds, sweep-through jqvming sounds like an outboard motor, and at high speeds it sounds like a piston aircraft engine.

d. Stepped tones jamming. Produced by three to five audio tones transmitted in a repeated increasing and a decreasing pitch. These tones sound like a Scottish bagpipe.

e. Random-keyed CW jamming. An unmodulated carrier used against radio facsimile and C W circuits. Automated equipment cannot distinguish the random dote and dashes from the desired message, and CW operators may even find it difficult or impossible to read.

f. Keyed CW jamming. Actual Morse code characters used primarily against radiotelegraph receiver which cannot distinguish between the jammed and the desired signal.

g. Beat tones jamming. Notes with continuous or varying pitch producing a howling sound. A loud, continuous, high-pitched CW tone is very disruptive on voice circuits and can also be very irritating to a radio operator.

h. Babbled-voice jamming. One form, called cocktail party, sounds like a crowd of people all talking at the same time. If the jamming signal's strength is greater than the desired message, it makes reception very difficult.

i. Recorded music jamming. May also be used to jam voice signals. This type of jamming may appear to be an ordinary broadcast being received on a harmonic to conceal the fact that it is deliberate.

Electronic Warfare

Implementing ECCM Procedures

1. Disconnect the receiving antenna to ensure the interference is coming from an external source. Electrical generators, overhead power lines and friendly equipment located nearby should be studied as possible causes of interference.

2. Follow antijamming (ECCM) measures:

a. Notify your immediate supervisor of suspected jamming. DO NOT INDICATE THAT YOU ARE BEING JAMMED OVER THE RADIO.

b. Reduce transmission speed (CW).

c. Remain calm and continue to operate.

d. Observe radio/net discipline.

e. Adjust fine tuning, gain (or volume) control, bandwidth selector, crystal filter and/or other controls peculiar to the equipment being used.

f. Increase transmitter power.

g. Reorient or resite your antenna or change antenna polarization.

h. Impose obstacles between your station antenna and the source of the jamming signals.

Electronic Warfare

MIJI Reporting

The radio operator must report all interference, whether jamming or natural interference, immediately to his communications supervisor. Any attempted or successful enemy deception should be reported immediately. The communications supervisor will send the report to higher headquarters for action. Jamming information should be recorded on the circuit log sheet to facilitate reporting. Information on jamming should be reported in the following format:

a. Initial MIJIFEEDER report. This is an abbreviated report containing only those items of information necessary to inform headquarters of the incident. The MIJIFEEDER report is submitted using the USMTF (JINTACCS) voice template (Figures 5-4 and 5-5). The MIJI report should be forwarded using the most secure means available. When transmitted over a nonsecure net, the report must be encrypted before transmittal.

(1) Line 1- Unit Identification.

(2) Line 2- Type of Interference.

(3) Line 3- Location (Latitude/Longitude or UTM (Grid Coordinates)).

(4) Line 4- Start Day-Time-Zone.

(5) Line 5- End Day-Time-Zone.

(6) Line 6- Operations/Equipment Affected.

(7) Line 7- Frequency/Frequency Range.

(8) Line 8- Narrative.

(9) Line 9- Message Hour-Minute-Zone (When Required).

(10) Line 10- Message Authentication IAW JTF Procedures.

b. The MIJIFEEDER record message report (MFRMR). This is a complete report of all the details of the incident. Due to the number of items that must be encrypted when the report is transmitted over a nonsecure circuit, the report should be delivered by messenger whenever possible. Either the operations officer, intelligence officer, or the electronic warfare officer is responsible for ensuring that a complete message report of the incident is submitted to the Joint Electronic Warfare Center (JEWC) as soon as possible following the incident.

c. Reference material. Refer to AR 105-3, FM 24-33, and FM 24-35-1 for a more detailed treatment of MIJIFEEDER and MIJIFEEDER record message reports.

MIJIFEEDER VOICE TEMPLATE

THIS IS _____ MIJIFEEDER _____ OVER
addressee originator

addressee answers then originator responds THIS IS _____
addressee originator

FLASH IMMEDIATE PRIORITY ROUTINE (Underline and transmit the precedence of this message.)

TOP SECRET SECRET CONFIDENTIAL UNCLASSIFIED (Underline and transmit the security classification of this message.)

MIJIFEEDER

LINE 1 (or) UNIT _____ (Unit Identification)

LINE 2 (or) TYPE _____ (Type of Interference)

LINE 3 (or) LOCATION _____ (Location - LAT/LONG or UTM)

LINE 4 (or) ONTIME _____ (Start Day-Time-Zone)

LINE 5 (or) OFFTIME _____ (End Day-Time-Zone)

LINE 6 (or) EFFECTS _____ (Operations/Equipment Affected)

LINE 7 (or) FREQUENCY _____ (Frequency/Frequency Range)

LINE 8 (or) NARRATIVE _____

_____

_____

LINE 9 (or) TIME _____ (Message Hour-Minute-Zone when required)

LINE 10 (or) AUTHENTICATION IS _____ (Message Authentication IAW JTF Procedures)
OVER

Figure 5-4. MIJIFEEDER voice template.

MIJIFEEDER VOICE TEMPLATE

A2D THIS IS BF6 MIJIFEEDER OVER
addressee originator

addressee answers then originator responds
A2D THIS IS BF6
addressee originator

FLASH IMMEDIATE PRIORITY ROUTINE (Underline and transmit the precedence of this message.)

TOP SECRET SECRET CONFIDENTIAL UNCLASSIFIED (Underline and transmit the security classification of this message.)

MIJIFEEDER

LINE 1 (or) UNIT 52D INF DIV (Unit Identification)

LINE 2 (or) TYPE JAMMING (Type of Interference)

LINE 3 (or) LOCATION 32TMV123123 (Location - LAT/LONG or UTM)

LINE 4 (or) ONTIME 252330Z (Start Day-Time-Zone)

LINE 5 (or) OFFTIME 260230Z (End Day-Time-Zone)

LINE 6 (or) EFFECTS RADIO (Operations/Equipment Affected)

LINE 7 (or) FREQUENCY 4.35 MHz (Frequency/Frequency Range)

LINE 8 (or) NARRATIVE INTERFERENCE INTERMITTENT

SAMPLE

LINE 9 (or) TIME 0235Z (Message Hour-Minute-Zone when required)

LINE 10 (or) AUTHENTICATION IS VA (Message Authentication IAW JTF Procedures)
OVER

Figure 5-5. Example of completed MIJIFEEDER voice template.

Section VII. Using the SOI

Encode and Decode Messages Using KTC-600 Tactical Operations Code

1. Encode messages (refer to SOI and KTC-600).

   a. Write messages in plain text.

   b. Turn to set page and locate set number for effective day.

   c. Turn to encode page for effective set.

   d. Locate word or phrase to be encoded.

NOTE: Words and phrases located alphabetically.

   e. Identify the three letter code group located to left of word or phrase.

   f. Write code group under applicable word or phrase until message is encoded.

2. Decode messages (refer to SOI and KTC-600).

   a. Write down encoded messages.

   b. Turn to decode page in effect for that day.

   c. Locate code groups and write the word or phrase beneath applicable group.

Using the SOI

Encrypt/Decrypt Numbers and Grid Zones

For detailed instructions on encrypting/decrypting, see SOI KAV 1600 Supplement 2.

Using the SOI

Authentication Using KTC-1400D

Step	Action
1	Select any two letters (except Z) for challenge.
2	Find first letter in first column of KTC-1400D.
3	Read across line indicated by first letter until second letter is located, correct reply to challenge is letter directly below second letter.

NOTE: If first letter of the challenge is Y indicating last line of table, the reply is taken from the same column of the A line.

Section VIII. World Time Zone Conversion Chart

a. A time conversion chart is used to convert local time in one zone to local time in any other zone. To construct your own time conversion chart, print the letter Z (Zulu), in the center of the next page in the space provided. However, any blank sheet of paper may be used for constructing your time conversion chart. To the right of the letter Z (Zulu), print the letters A (Alpha) through M (Mike), leaving out the letter J (Juliett). To the left of the letter Z (ZUIU), print the letters N (November) through Y (Yankee). You now have the 25 time zone suffix letters in the order in which they represent the 25 world time zones. An easy rule to follow in constructing your own time conversion chart is: NZA (the three letters that appear in the center of your paper) and leave out the J (the letter of the alphabet that is not used). Just remember this simple rule: NZA AND LEAVE OUT THE J.

b. When using your time conversion chart, there are two easy rules to follow: First, you NEVER count the time zone in which you are located. Second, you add 1 hour for each time zone crossed when moving to your right, and you subtract 1 hour for each time zone crossed when moving to your left. In more simple terms, ADD when going to the RIGHT and SUBTRACT when going to the LEFT. For example, if you were stationed in C (Charlie) time zone and needed to convert to Z (Zulu) time, you would start with the letter C. Do not count the C for this is the zone in which you are stationed. Then count the B, A and Z zones to your left (three) and subtract 3 hours from your local time, and the result will be GCT or Z (ZUIU) time. (See Figure 5-6.)

Section IX. United States Message Text Format

a. The USMTF (JINTACCS) Program provides a series of standard message formats for six discrete mission area segments. These segments are operations control, fire support air operations, intelligence, maritime operations, and combat service support. The major USMTF (JINTACCS) product line consists of the following:

- Standardized voice message text formats.
- Standardized record MTFs.
- Standardized tactical digital information link message formats.
- Standardized interface operating procedures.
- Central data base system.

b. Voice messages are designed for ease of preparation and transmission. Operators fill in the appropriate blanks on the appropriate message template and then read the message over the radio or telephone. The receiver, knowing the format, can easily record the information. Voice messages are normally used when record traffic devices are inoperative or not available, or when the tactical situation does not allow adequate time for operators to format a record message.

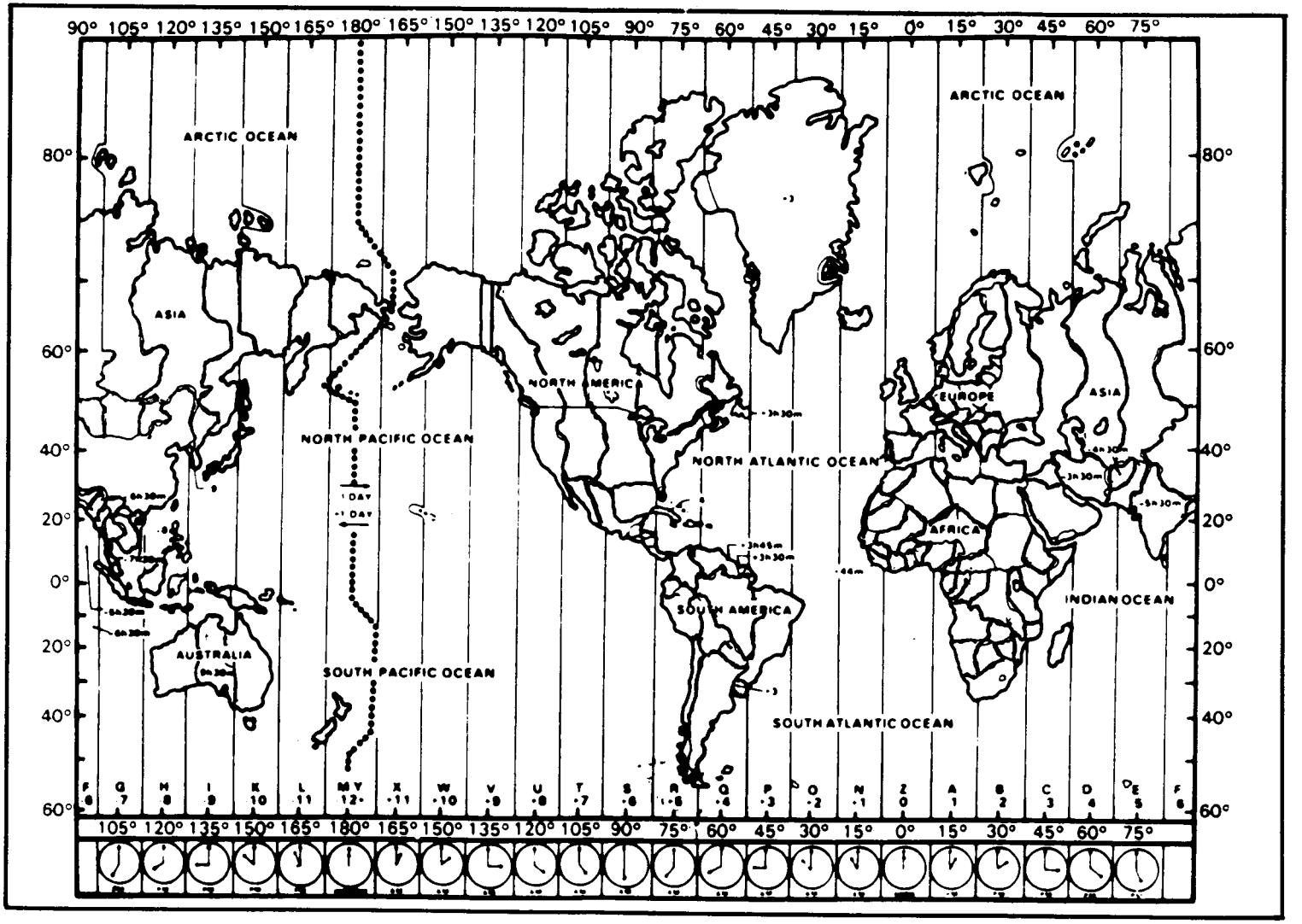

Figure 5-6. World time zone map.

JOINT MESSAGE FORM

PAGE	DTG/RELEASER TIME			PRECEDENCE		CLASS	SPECAT	LMF	CIC	ORIG/MSG IDENT
	DATE TIME	MONTH	YR	ACT	INFO					
01 OF 01	240611Z	SEP	89	ZZ	ZZ	UUU				267060Z

SECURITY CLASSIFICATION

BOOK | MESSAGE HANDLING INSTRUCTIONS

FM CDR 2-89TH ELD ABN (PERSH)
TO NMCC WASH DC
COMUSEUCOM MAD IA
INFO CDR XXIII CORPS
CG 7TH MAF
COMCIG87.3
CDR 4TH TAE

SAMPLE

UNCLAS
OPER/RAMROD//
MSGID/OPREP-3PNE/2-89TH FA BN/240900L/SEP/PERSH//
REF/A/OPREP-3PNE/2-89TH FA BN/240608Z SEP89//
ELAGWORD/PINNACLE/NUCLEAR//
TIMELOC/240605Z/36BTS8764592//
NUCTM/ETOT:240613Z/CBTRY 2-89 FA(PERSH)//
NUCTYP/WPNSS:PERSH/NUCSTAT/MARK:MARK//
NUCCRS/-/ATMPT:38DR WA53796/COURCE:BSDSM/-/ESTIME:0500
/ETOT:240613Z//

DRAFTER NAME, TITLE, OFFICE SYMBOL, PHONE	SPECIAL INSTRUCTIONS	DISTR
DK. HERTZ, SSG, NCOIC, BOC, X216		
RELEASER: NAME, TITLE, OFFICE SYMBOL AND PHONE: I.M. HOLDEN, MAJ, SHIFT LDR, X221		
SIGNATURE: J.M. Holden	SECURITY CLASSIFICATION / DATE TIME GROUP	JRF 1.0002 01 12 MAY 84

DD Form 173/4, MAR 79

Exception to DD Form 173, MAR 79, approved by USMCEM Apr 86

Figure 5-7. DD Form 173/4, Joint Message Form.

c. Record messages are designed to be processed and transmitted by teletype, subscriber terminals, or computer terminals devices. Figure 5-7 shows a sample joint message form. They can be read manually and are machine (computer) processed. Machine processibility is an important characteristic of the USMTF (JINTACCS) record message because it minimizes human intervention.

Requirement: Transmit the voice (JINTACCS) (RRII) message.

RRII VOICE TEMPLATE

E64	THIS IS T46R	INTEL RESPONSE OVER
Addressee	Originator	
Addressee answers, then originator responds	E64 addressee	THIS IS T46R originator

FLASH IMMEDIATE PRIORITY ROUTINE (Underline and transmit the precedence of this message.)

TOP SECRET SECRET CONFIDENTIAL UNCLASSIFIED (Underline and transmit the security classification of this message.)

INTEL RESPONSE

LINE 1 (or) REFERENCE YOUR (Originator's Call Sign, or YOUR if appropriate)

LINE 2 (or) REQUEST 2009046 (Request Number of Originator)

LINE 3 (or) DATE-TIME GROUP 202130Z (Day-Time-Zone of Originator's Request)

LINE 4 (or) NARRATIVE THERE ARE SA-9S WITHIN CIRCLE: RT10467963, RT01152343, RT28748877
SA-9S OUTSIDE CIRCLE: RT34790795
ZSUs WITHIN CIRCLE: RT03057247, RT01658023
ZSUs OUTSIDE CIRCLE: RT22348326

LINE 5 (or) TIME 2330Z (Message Hour-Minute-Zone when required)

LINE 6 (or) AUTHENTICATION IS (Message authentication IAW JTF procedures)

OVER

NOTE: You are the RTO for the Commander, 52D INF DIVARTY. Transmit the above message to Commander, 52d Inf Div. Use item 4, period 4 for call signs and frequency.

COMSPOT VOICE TEMPLATE

E64	THIS IS T46R	COMSPOT OVER
Addressee	Originator	
Addressee answers, then originator responds	E64 addressee	THIS IS T46R originator

FLASH IMMEDIATE PRIORITY ROUTINE (Underline and transmit the precedence of this message.)

TOP SECRET SECRET CONFIDENTIAL UNCLASSIFIED (Underline and transmit the security classification of this message.)

COMSPOT

LINE 1 (or) EVENT AIRBORNE RADAR (Communications event being reported)

LINE 2 (or) FROM 210730Z (Event-date-time ZULU)

LINE 3 (or) UNTIL 231530Z (Estimated ZULU day-time event will end)

LINE 4 (or) LINK SINGLE-CHANNEL RADIO (System, circuit, link or facility name)

LINE 5 (or) LOCATION _____ (Activity location in LAT/LONG, UTM, or place name)

LINE 6 (or) RELOCATION _____ (Relocation in LAT/LONG, UTM, or place name)

LINE 7 (or) NARRATIVE 30TH SF GROUP TESTING EQUIPMENT FOR AIR GROUND USE

LINE 8 (or) TIME 070630Z

LINE 9 (or) AUTHENTICATION _____ (Authentication IAW JTF procedures)

OVER

Glossary

Acronyms and Abbreviations

AC	alternating current
adj	adjust
AF	audio frequency
AFC	automatic frequency control
AGC	automatic gain control
ALC	automatic level control
AM	amplitude modulated
amp	ampere
ant	antenna
ASAP	as soon as possible
aud	audio
auto	automatic
aux	auxiliary
bal	balance
bat	battery
bde	brigade
BFO	beat frequency oscillator
bkr	breaker
blo/blwr	blower
bn	battalion
BNC	British National Council (connector)

c	celsius
cal	calibrate/calibration
car	carriage
ck	check
cdr	commander
clr	clear
CNV	cryptonet variable
C O	carry operated
COMSEC	communications security
conn	connection
conv	converter
cplr	coupler
cur	current
CVC	combat vehicle crewman
CW	continuous wave
DAMA	demand-assigned multiple access
D C	direct current
del	delete
div	division
DIVARTY	division artillery
DLED	dedicated loop encryption device
D S	distant radio station
d x	direct exchange
e a	each

ECCM	electronic counter-countermeasures
EPC	equipment performance check
ext	external
F	Fahrenheit
fil	filter
FM	frequency modulated
freq	frequency
FSK	frequency shift keying
ft	feet
fwd	forward
gen	generator
gnd	ground
HAEMP	high altitude electromagnetic pulse-protected
HCM	higher category of maintenance
HF	high frequency
HV	high voltage
Hz	hertz
IAW	in accordance with
ICT	intelligence communications terminal
IF	intermediate frequency
IHFR	improved high frequency radio
inf	infantry
info	information
int	internal

inv	inverter
JEWC	Joint Electronic Warfare Center
JINTACCAS	Joint Interoperability of Tactical Command and Control System
JTF	joint task force
kb/s	kilobits per second
kHz	kilohertz
kc	kilocycle
kW	kilowatt
lat	latitude
LB	lower band
ld	load
LO	low level operation
long	longitude
LSB	lower sideband
ltrs	letters
m	mile
MA	milliampere
max	maximum
MFRMR	MIJIFEEDER record message report
MHz	megahertz
mic	microphone
MIJI	meaconing, intrusion, jamming, and interference
min	minute
mon	monitor

MTF	message text format
norm	normal
NCS	net control station
NRI	net radio interface
NRZ	nonreturn to zero
NSK	narrow shift keying
NVIS	near vertical incidence sky wave (Antenna AS-2259)
op	operator
OWR	one way reversible
PA	power amplifier
ph	phase
PMCS	preventive maintenance checks and services
prim	primary
prosign	procedure sign
proword	procedure word
psi	per square inch
PTT	push-to-talk
pwr	power
qty	quantity
rad	radio
RATT	radio teletypewriter
RCU	remote control unit
rdy	ready
rec/rcv	receive

recp	receptacle
rcvr	receiver
rem	remote
ret	return
retrans	retransmission
RF	radio frequency
RPM	revolutions per minute
RT	receiver/transmitter
RTO	radiotelephone operator
SB	sideband
SBO	switchboard operator
SCOTT	single-channel objective tactical terminal
sec	seconds
sel	selector
sens	sensitivity
sig	signal
SINCGARS	Single-Channel Ground and Airborne Radio System
SOI	signal operation instructions (S0I is synonymous with CEOI)
SOP	standing operating procedure
spkr	speaker
SSB	single sideband
sub	subscriber/substation
sup	support

sw	switch
swbd	switchboard
SWR	standing wave ratio
TD	transmitter distributor
tel	telephone
TM	technical manual
TDMA	time-division multiple access
TRANSEC	transmission security
TS	telephone subscriber
TTY	teletypewriter
tun	tune
UCID	user controlled interface device
unclas	unclassified
USB	upper sideband
UTM	Universal Transverse Mercator
USMTF	United States Message Text Format

v	volt
VFO	voice frequency oscillator
VHF	very high frequency
vis	visual
VOX	voice operated keying
VSWR	voltage standing wave ratio
WPM	words per minute
xmt/xmit/tr	transmit
xtal	crystal
ZRO	zero

References

Related Publications

Related publications are sources of additional information. They are not required in order to understand this publication.

Allied Communications Publications (ACP)

121(F)

US SUPP-1

(C) Communication Instructions - General (U)

124(D)

Communication Instructions - Radiotelegraph Procedures

125(D)

Communication Instructions - Radiotelephone Procedures

126(C)

Communication Instructions - Teletypewriter (Teleprinter) Procedures

131(D)

Communication Instructions - Operating Signals

Army Regulations (AR)

105-3

Reporting Meaconing, Intrusion, Jamming and Interference of Electromagnetic Systems

Department of Army Pamphlets (DA PAM)

25-7

Joint User Handbook for Message Text Formats (JUH-MTF)

Field Manuals (FM)

24-18

Tactical Single-Channel Radio Communications Techniques

24-33

Communications Techniques: Electronic Counter-Countermeasures

24-35-1
Signal Supplemental Instructions

Forms

DA Form
2404
Equipment Inspection and Maintenance Worksheet

DD Form
173/4
Joint Message Form

Technical Bulletins (TB)

43-0125
Installation of Communications-Electronic Equipment Hook-up of Electrical Cables to Mobile Generator Sets on Fielded Equipment to Meet Electrical Safety Standards

Training Circulars (TC)

11-6
Grounding Techniques

Technical Manuals (TM)

11-5805-201-12
Operator's and Organizational Maintenance Manual for Telephone Set, TA-312/PT and TA-312A/PT

11-5805-387-15-1
Operator's, Organizational, Direct Support, General Support, and Depot Maintenance Manual: Modem, Radio Teletypewriter MD-522\GRC

11-5805-387-15-2
Operator's, Organizational, Direct Support, General Support, and Depot Maintenance Manual: Radio Teletypewriter Modem, MD-522A/GRC

11-5815-200-12
Operator's and Organizational Maintenance Manual: Teletypewriter Sets, AN/FGC-20, AN/FGC-20X, AN/FGC-21, AN/FGC-66, AN/FGC-159 and AN/FGC-159X, AN/FGC-160, AN/FGC-177, AN/UGC-4, AN/UGC-29, AN/UGC-29X and Teleprinter, TT-259/FG

11-5815-204-10
Operator's Manual: Radio Teletypewriter Sets, AN/GRC-46 and AN/GRC-46A, AN/GRC-46B, AN/GRC-46C and AN/VRC-29

11-5815-238-10
Operator's Manual for Teletypewriter Sets, AN/GGC-3, AN/GGC-3A, AN/GGC-53, AN/GGC-53A, and Teletypewriter Reperforator-Transmitters, TT-76/GGC, TT-76A/GGC, TT-76B/GGC and TT-76C/GGC, TT-699/GGC, TT-699A/GGC, TT-699B/GGC and TT-699C/GGC

11-5815-331-14
Operator's, Organizational, Direct Support, and General Support Maintenance Manual: Radio Teletypewriter Set AN/VSC-2 and AN/VSC-2A

11-5815-332-15
Operator's, Organizational, Direct Support, General Support, and Depot Maintenance Manual: Radio Teletypewriter Set, AN/VSC-3

11-5815-334-10
Operator's Manual for Radio Teletypewriter Sets, AN/GRC-122, AN/GRC-122A, AN/GRC-122B, AN/GRC-122C, AN/GRC-122D, AN/GRC-122E, AN/GRC-142, AN/GRC-142A, AN/GRC-142B, AN/GRC-142C, AN/GRC-142D and AN/GRC-142E

11-5815-602-10
Operator's Manual for Terminal, Communications, AN/UGC-74A(V)3

11-5815-616-13
Operator's Organizational and Direct Support Maintenance Manual Installation Kit, Electronics Equipment MK-2488/G

11-5820-489-10
Operator's Manual for Control Group, AN/GRA-6

11-5820-489-34
Direct Support and General Support Maintenance Manual, Control Group AN/GRA-6

11-5820-520-10
Operator's Manual for Radio Sets, AN/GRC-106 and AN/GRC-106A

11-5820-520-20
Organizational Maintenance Manual for Radio Sets, AN/GRC-106 and AN/GRC-106A

11-5820-919-12
Operator's and Organizational Maintenance Manual for Radio Set, AN/PRC-104A

11-5820-923-12
Operator's and Organizational Maintenance Manual for Radio Set, AN/GRC-213

11-5820-924-13
Operator's, Organizational and Direct Support Maintenance Manual for Radio Set, AN/GRC-193A

11-5985-357-13
Operator's, Organizational, and Direct Support Maintenance Manual for Antenna Group, OE-254/GRC

FM 24-19
24 MAY 1991

By Order of the Secretary of the Army:

CARL E. VUONO
General, United States Army
Chief of Staff

Official:

PATRICIA P. HICKERSON
Colonel, United States Army
The Adjutant General

DISTRIBUTION:

Active Army, USAR, and ARNG: To be distributed in accordance with DA Form 12-11E, requirements for FM 24-19, Radio Operator's Handbook (Qty rqr block no. 1343).

☆ U.S. GOVERNMENT PRINTING OFFICE : 1994 0 - 300-421 (82875)