FM 1-508

MAINTAINING AVIATION LIFE SUPPORT EQUIPMENT

HEADQUARTERS, DEPARTMENT OF THE ARMY

DISTRIBUTION RESTRICTION: Approved for public release; distribution is unlimited.

*FM 1-508

Field Manual
No. 1-508

Headquarters
Department of the Army
Washington, DC, 1 March 2000

Maintaining Aviation Life Support Equipment

Contents

Page

PREFACE iv

Chapter 1 THREAT

Threat Characteristics 1-1
General Threats to Aviation Maintenance Units 1-2
Specific Threats to Aviation Life Support Equipment 1-2

Chapter 2 AVIATION LIFE SUPPORT EQUIPMENT CONCEPT OF OPERATIONS FOR CONDUCTING DECISIVE OPERATIONS

Maintenance Management 2-1
Maintenance Responsibilities 2-3
Aviation Life Support Equipment Budget 2-4
Aviation Life Support Equipment Source Agencies 2-5
Maintenance Inspections 2-5
Maintenance Scheduling 2-6
Aviation Life Support Equipment Status Board 2-9
Life Support Equipment Inspection Calendar 2-9
Maintenance Management Files 2-10
Maintenance Library Update 2-11
Equipment Accountability and Control 2-11
Equipment and Component Storage 2-13

DISTRIBUTION RESTRICTION: Approved for public release; distribution is unlimited.

*This publication supersedes FM 1-508, 12 January 1990.

Page

Chapter 3 AVIATION LIFE SUPPORT EQUIPMENT SHOP

Design 3-0
Location 3-0
Work Area 3-0
Storage Area 3-1
Fitting Area 3-1
Office Space 3-1
Shop Equipment 3-1
Environmental Control Standards 3-1
Personal Hygiene 3-1
Shop Safety 3-2

Chapter 4 PUBLICATIONS MANAGEMENT

Section I – Army Publications

Procurement 4-1
Forms 4-1
Publications Library 4-1
Publications Disposal 4-1
Excess Publications 4-2

Section II – Interservice Publications

Air Force and Navy Publications 4-2
Air Force Accounts 4-5
Navy Accounts 4-7

Chapter 5 EQUIPMENT RECORDS

Forms and Records 5-0
Record Types 5-0
Record Replacement 5-0
Blank Forms 5-1

Chapter 6 SUPPLY

Publications 6-0
Aviation Life Support Equipment Requests 6-1
Forms 6-2
Documentation 6-9
Standard Form 364 (Report of Discrepancy [ROD]) 6-10
Prescribed Load List 6-10
Expendable Supplies and Repair Parts 6-11

Page

Chapter 7 **AVIATION LIFE SUPPORT EQUIPMENT SURVIVAL TRAINING PROGRAM**
Survival Training Requirements 7-0
Survival Training Courses 7-1

Appendix A **SAMPLE STANDING OPERATING PROCEDURE FOR AVIATION LIFE SUPPORT EQUIPMENT SHOP** A-0
Appendix B **SHOP ILLUSTRATIONS AND SUGGESTIONS** B-0
Appendix C **SHOP EQUIPMENT** C-0
Appendix D **EQUIPMENT FORMS AND RECORDS** D-1
GLOSSARY Glossary-0
BIBLIOGRAPHY Bibliography-1
INDEX Index-0

Preface

Aviation life support equipment (ALSE) is designed to sustain aircrews and passengers throughout the flight environment. It does this by increasing their mission effectiveness and providing a means of safe and reliable escape, descent, survival, and recovery in emergency or combat situations.

FM 1-508 is written for peacetime and all dimensions of battlespace environments. It applies to commanders and aviation unit maintenance, aviation intermediate maintenance, depot, and operations personnel.

The ultimate goal of this manual is to establish a standardized ALSE maintenance program and support the need for an adequate shop. Appendixes A through D provide supplemental material, an SOP for ALSE shops, shop illustrations and suggestions, shop equipment, and equipment forms and records.

The proponent for this publication is Headquarters, US Army Training and Doctrine Command. Submit changes for improving this publication on DA Form 2028 (Recommended Changes to Publications and Blank Forms) and forward it to Commandant, US Army Aviation Center, Aviation Life Support Equipment Course, ATTN: ATZQ-BDE-EH, Fort Rucker, Alabama 36362.

Unless otherwise stated, whenever the masculine gender is used, both men and women are included.

This publication has been reviewed for operations security considerations.

Chapter 1

Threat

A multipolar threat from many sources has replaced the bipolar threat that dictated our military posture for many years. The United States retains global strategic interests, including obligations to friends and allies who may face significant threats from within their own regions. While the threat of a worldwide, high-intensity conflict has dramatically diminished, the threat of increasingly lethal regional conflicts has increased.

THREAT CHARACTERISTICS

1-1. Army aviation systems may be deployed worldwide to counter forces with various mixes of weaponry, ranging from outdated and obsolete to modern and increasingly sophisticated. The modern-day battlefield, regardless of location, will be characterized by unprecedented lethality.

1-2. Many of the major military powers are moving towards smaller, better equipped, and better trained forces. Less-developed nations also can improve military capabilities through greater access to military system technologies and increased availability of advanced military equipment on the international market. The proliferation of complete new weapons systems is tempered by a larger force capability perspective. Countries will modernize the portion of the force that provides the greatest leverage against opponents.

1-3. The fact that many countries do not acquire corresponding maintenance and resupply capabilities with new weapons and sustainment is questionable. What may result is a belligerent power with a predominantly low-technology force with high-technology “niches” that increase the overall lethality of his force. This is accomplished in many cases to establish regional dominance over another regional power. This low-technology/limited high-technology environment does not translate into a low-threat environment for Army aviation.

1-4. Many possible hostile forces, especially paramilitary, militias, rogue militaries, bandits, terrorists, narco-criminals, and other nonstate threats, usually will maintain low-technology weapons systems; however, in some cases they may possess limited high-technology weapons equaling or surpassing US capabilities. This possibly may create the most challenging threat. Army aviation forces must be prepared continually to face a variety of threat forces, many with credible military capabilities.

GENERAL THREATS TO AVIATION MAINTENANCE UNITS

1-5. General threats to aviation maintenance units include—

- Conventional and improved conventional munitions (blast, fragmentation, incendiary) delivered by air, artillery, missile, or special forces.
- Nuclear munitions and side effects (electromagnetic pulse).
- Chemical and biological agents delivered by the enemy or brought in on contaminated equipment.
- Radio-electronic weapons that include lasers, microwave direction finders, and other high-technologic systems.
- Indirect threats that affect operations of aviation maintenance to include—
  - Disruption of command, control, and communications, including destroying them.
  - Disruption or destruction of lines of communication and halting the flow of supplies, fuel, parts, and so forth.
  - Contamination of supplies, food, water, and so forth, by chemical, biological, nuclear, or radio-electronic means.

1-6. FM 1-500 covers the threat to aviation maintenance units in general.

SPECIFIC THREATS TO AVIATION LIFE SUPPORT EQUIPMENT

1-7. The threats specifically to the ALSE shop include the ground and air threat to the unit site plus the threat brought to the site on ALSE to be repaired. The latter threat is primarily from nuclear, chemical, or biological residue but could include unexploded munitions and sabotaged equipment.

1-8. Residue from nuclear, chemical, or biological munitions arriving at the ALSE shop by nature will be persistent agents. Detection of this residue may not be possible with equipment available. Debriefing of pilots or other maintenance personnel will assist in determining whether the equipment is contaminated. Persistent agents are primarily blister or nerve agents. Personnel absorb these agents through the skin. Blister agents will cause temporary injury or disability. Nerve agents are extremely toxic and a small drop could kill within 20 minutes. Awareness of this threat is essential to maintenance survival.

1-9. Equipment recovered from downed aircraft could conceal live ammunition or boobytraps. Shop personnel could become casualties from this type of combat residue. Awareness of the possible dangers that could enter the ALSE shop is half the battle in preventing maintenance casualties. Proper protective gear and detectors, or inspection of damaged equipment, should keep Army maintenance components functioning and contributing to all decisive operations.

Chapter 2

Aviation Life Support Equipment Concept of Operations for Conducting Decisive Operations

Operating in all dimensions of the battlespace may require the unit to readjust its ALSE maintenance functions. The concepts and practices discussed in the following chapters should be used as guidelines for managing the unit ALSE program. Some areas may require modification, however, to meet the unit's mission. Army aviation battlespace doctrine has a significant effect on AVUM and AVIM ALSE operations. ALSE technicians should review FM 1-500 for information on tactics, techniques, and procedures for Army aircraft maintenance. Specifically, they should review chapters 2 and 3 for additional information on Army aviation's structure, relationships, and command, control, and communications concepts.

MAINTENANCE MANAGEMENT

AVIATION LIFE SUPPORT EQUIPMENT MAINTENANCE, A CRITICAL FACTOR

2-1. Proper ALSE assets are critical factors in the aircrew member's ability to maintain battlefield mobility and survivability. Especially important are the maintenance and repair of ALSE systems and components.

2-2. Working in any type of aviation environment is challenging. However, it is even more critical for the unit ALSE program to remain functional in the battlespace environment where there is an extricable linkage between maneuver and fires. Also, attaining the maintenance objective becomes more challenging as the unit realizes personnel resource limitations.

2-3. The unit's primary maintenance objective is to maintain available aircraft to accomplish its mission. ALSE maintenance becomes a secondary objective as the ALSE technician's primary MOS, or job, is maintaining aircraft or performing other aviation-related tasks. With personnel and financial resource limitations, the unit faces critical decisions on how to obtain required ALSE, who should perform ALSE maintenance, and how they should perform it. The critical factor is that, even though ALSE maintenance is a secondary objective, it must not be completely forgotten or disregarded. Once commanders understand that ALSE maintenance is critical for the survivability of their crew members, and possibly their aircraft, this decision will become clearer: ALSE maintenance is an integral function for accomplishing the mission along with other unit maintenance.

MAINTENANCE CONCEPTS AND POLICIES

2-4. The following maintenance concepts and policies should be observed:

- Each commander is responsible for maintaining ALSE issued to his unit.
- Inspection, maintenance, and repair of ALSE will be accomplished according to the applicable technical manual, technical order, or Naval Air publication for the equipment involved. These functions will be performed consistent with the tactical situation, skill, time, repair parts and special tools, and test equipment authorized and available.
- Unserviceable ALSE beyond the maintenance authority or capability will be reported or delivered to the next higher maintenance level promptly.
- Quality maintenance depends on preventive maintenance services and inspections.
- Operator (crew member) maintenance will be the first priority; it will be emphasized constantly throughout the chain of command because it is the key factor in the operational readiness of ALSE.
- Specific ALSE policies on use, maintenance, and responsibilities are AR 95-1 and DA Pam 738-751. Aviation commanders at all levels should know and understand these policies.

AVIATION LIFE SUPPORT EQUIPMENT MAINTENANCE TASKS

2-5. The ALSE technicians and shop elements of AVUM and AVIM units are responsible for ALSE maintenance that is beyond the capability or responsibility of the crew member. To effectively perform their mission, ALSE personnel must perform the following maintenance tasks:

- Make scheduled periodic maintenance inspections and repair of ALSE.
- Make unscheduled maintenance inspections of ALSE that has failed a preflight inspection or of problems identified during operator (crew member) maintenance of ALSE.

THE AVIATION LIFE SUPPORT EQUIPMENT SHOP

2-6. The organization of the ALSE field shop depends on many factors: the size of the unit and the density and type of equipment, and so forth. The basic shop must provide ALSE personnel with enough space to perform all required procedures for maintenance, inspections, and storage of spare parts and equipment. The area will be protected as well as possible from pilferage, dampness, fire, dust, insects, rodents, and direct sunlight.

2-7. The unit must provide mobility for the ALSE shop and its related equipment. This could be accomplished with a 3/4-ton or 2 1/2-ton truck, depending on the amount of equipment to be moved.

2-8. The location of the ALSE shop must be determined based on the unit assets. The ALSE shop could be located in a general-purpose small tent or a maintenance CONEX/van. It could be collocated with another maintenance activity's CONEX/van. The location will depend on the size of the ALSE operation and available assets.

2-9. The work area should contain a workbench that is free from rough or abrasive materials and splinters. The work area should have lighting available and a power source for lights and small electrical appliances.

2-10. Because most ALSE is issued to crew members or located in the aircraft, the requirement for a storage area should be limited to repair parts and tools. The shop location should have shelves, cabinets, or storage areas to accommodate the specific equipment involved. Storage cabinets with locks should be provided for securing the test equipment, tools, and supplies that are required based on the type of equipment in the unit. A desk or workbench area must be available for administrative requirements. Charts, records, publications, and administrative supplies should be located in the ALSE shop area for easy recordkeeping and equipment maintenance.

2-11. The ALSE shop personnel must be capable of performing the following maintenance tasks:

- Remove, replace, service, prepare, preserve, clean, and store ALSE assemblies and components.
- Disassemble, repair, functionally test, and diagnostically test, adjust, and reassemble ALSE systems, subsystems, and components according to directives, technical manuals, and procedures.
- Use, prepare, submit, and maintain ALSE forms and records identified in DA Pam 738-751.
- Maintain an up-to-date ALSE publications library consistent with equipment and mission requirements.

2-12. Submit request for and maintain supplies and repair parts according to the current Unit Supply Handbook. Request should be submitted to the aviation technical supply, unit supply, or the supply support activity according to unit procedures. These tasks may be restricted by time and personnel limitations and mission performance.

PROPER FUNCTIONING AND INTEGRATION OF AVIATION LIFE SUPPORT EQUIPMENT

2-13. ALSE must be maintained in a highly serviceable condition. This will ensure proper integration between the aircrews and their weapons systems and proper functioning in the environment. The equipment must sustain aircrews and passengers in an emergency or survival situation. Commanders must make sure that only trained, qualified personnel, either military or civilian, perform maintenance on ALSE according to AR 95-1. Minor faults must be found and corrected before they become major problems. Damage to ALSE can be prevented through prompt, detailed inspections.

MAINTENANCE RESPONSIBILITIES

COMMANDERS

2-14. Commanders at all levels of command are responsible for proper ALSE maintenance. Besides performing those duties in AR 95-1, they will—

- Maintain material in a serviceable, mission-ready condition.

- Comply with prescribed procedures for obtaining authorized maintenance resources; for example, technically qualified personnel, facilities, technical publications, repair parts, tools, test equipment, and maintenance supplies.
- Replace unserviceable end item equipment components.
- Prevent abuse of equipment under their control, and investigate and take action on evidence of abuse.
- Record the receipt, operation, maintenance, calibration, modification, and transfer of equipment.
- Conduct periodic inspections to determine that maintenance operations are adequate and take necessary follow-up actions to ensure that faults are corrected. Appoint ALSOs on orders to assist, advise, and represent commanders in all matters pertaining to ALSE according to AR 95-1.

AVIATION LIFE SUPPORT OFFICERS

2-15. Besides those responsibilities in AR 95-1, ALSOs will—

- Ensure authorized repair parts and maintenance supplies are on hand or on valid requisition.
- Ensure outstanding supply requests are followed up promptly.
- Schedule ALSE maintenance, and plan, supervise, and manage the unit ALSE maintenance program.
- Keep an up-to-date ALSE maintenance SOP (Appendix A), and ensure conformance to Department of the Army maintenance doctrine.

TECHNICIANS

2-16. ALSE technicians will be appointed to assist, advise, and represent the ALSO in all matters pertaining to ALSE according to AR 95-1.

AIRCREWS

2-17. Aircrew members will—

- Use equipment properly.
- Keep equipment clean, presentable, safe, and operable.
- Report any malfunction that may develop that is beyond their capability or authorization to correct.
- Perform before-, during-, and after-operation maintenance/inspections according to the applicable equipment TM and the unit SOP.

AVIATION LIFE SUPPORT EQUIPMENT BUDGET

2-18. Commanders must include ALSE in their budget. Funding for equipment, supplies, and repair parts must be properly managed to ensure a well-maintained and continuous ALSE program. When preparing the budget, review AR 95-1; CTAs 8-100, 50-900, 50-909, and 50-970; and applicable MTOEs and TDAs. Also complete steps 1-7. (See paragraph entitled "Maintenance Scheduling.") This will provide the initial ALSE cost or identify equipment shortages for determining a "get well" budget. To obtain repair parts and maintenance supplies costs, use the proper maintenance shop stock

or PLL procedures discussed in chapter 6. Other factors that you need to consider when determining your maintenance budget include the unit mission, training requirements, and unscheduled maintenance possibilities.

2-19. An annual ALSE budget can be obtained by adding the initial or "get well" budgets with the maintenance budget. The annual budget can further be broken down into quarterly dollar figures. ALSE personnel should maintain records regarding the steps and equipment authorizations they used for obtaining their budget request.

AVIATION LIFE SUPPORT EQUIPMENT SOURCE AGENCIES

2-20. Source agencies from which general and specific ALSE materials can be obtained include the US Army Aviation and Missile Command, US Army Safety Center, and US Army Aviation Logistics School.

MAINTENANCE INSPECTIONS

2-21. Types of inspections conducted and maintenance procedures performed are as follows:

- **Preflight inspections** are conducted by individual crew members before actual flight. No special technical skills are required. Crew members look for broken seals, missing components, and obvious damage.
- **Postflight inspections** are conducted by individual crew members to alert ALSE personnel of any discrepancies.
- **Preventative maintenance checks and services** are performed by ALSE personnel. The particular component technical manual establishes inspections at prescribed intervals.
- **Special inspections** are performed by ALSE personnel whenever conditions warrant. The inspector or the directive will determine the extent of these inspections.
- **Initial acceptance inspections** are performed by ALSE personnel on newly acquired equipment such as helmets, rafts, and survival kits. They inspect to make sure equipment is serviceable, all components are received, and serial-numbered items are validated.
- **Turn–in inspections** are conducted by ALSE personnel on equipment before it is turned in to the CIF or supply. ALSE personnel will properly identify equipment serviceability and tag the equipment with the appropriate materiel condition tags.
- **Serviceable parts inspections** are conducted by ALSE personnel. They determine whether parts removed from unserviceable equipment (such as helmets, life preservers, and oxygen parts) are serviceable.
- **Commander's inspections** are conducted by a commander or his staff personnel to determine equipment reliability and performance and maintenance program effectiveness. These are both formal and informal inspections. Commanders and ALSE personnel may use the US Army Forces Command or local inspection checklist.

- **Operator maintenance** is performed by individual crew members. This maintenance procedure covers operator PMCS and proper care and cleaning of equipment such as flight clothing and helmets.

MAINTENANCE SCHEDULING

COORDINATION

2-22. Scheduled ALSE maintenance is necessary to maintain high maintenance standards. Constant coordination between the operations officer and the ALSO is required; it is necessary to provide the amount of ALSE needed to meet the mission requirements and to simultaneously permit adequate time for maintenance.

2-23. To properly schedule ALSE maintenance, the ALSO or ALSE technician must know, and have documentation on, vital information relating to the unit mission, aircraft, personnel, and equipment authorizations. Completing the several steps and actions listed below will help ALSE personnel provide this needed information. Once completed, it can be used for budgeting purposes as well as for maintenance scheduling. Figure 2-1 is a sample of these completed steps.

STEPS IN THE MAINTENANCE SCHEDULING PROCESS

2-24. The following steps outline the maintenance scheduling process:

- Step 1—Determine personnel authorizations. Some unit ALSE

  authorizations (such as helmets, vests, survival radios, survival kits, and oxygen masks) are based on the authorized number of crew members and noncrew members. CTA 50-900, AR 95-1, TDAs, and MTOEs define equipment authorizations. Refer to unit TDA/MTOE to determine crew member authorizations, and to unit orders for noncrew member authorizations.
- **Step 2**—Determine aircraft authorizations. Some ALSE (such as life preservers, first aid kits, and overwater survival kits) is also based on type of aircraft, seat availability, and unit mission. CTA 8-100, CTA 50-900, AR 95-1, and the aircraft operator's manual define equipment authorizations. Refer to unit TDA/MTOE to determine unit mission statement, number and type of aircraft authorizations, and proper operator's manual for seat availability.
- **Step 3**—Determine equipment authorizations. Various ARs, CTAs, SBs, MTOEs, and TDAs authorize unit ALSE. List (Figure 2-1) all the equipment your unit is required and authorized to have based on the proper publications and unit mission.
- **Step 4**—Determine on-hand quantities. To complete this step, simply conduct a 100-percent inventory of your unit ALSE; list it beside your authorized column. If the numbers are equal, you have all your authorized equipment. If your on-hand quantity is greater than that authorized, note the overage in the remarks column. If the on-hand quantity is less than that authorized, subtract the on-hand figures from the authorized and note your shortages in the remarks column. Then

use this shortage list to determine your initial or "get well" budget by using the proper supply publications for obtaining cost and equipment data.

- **Step 5**—Determine daily inspection requirements. After completing steps 3 and 4, total your equipment authorizations and your on-hand quantities. Use these figures to determine your daily inspection requirements. There are three 120-day inspection cycles per year and, on average, we have estimated that there are about 84 working days in a 120-day cycle. With this information, you can use the following formulas to determine your daily inspection requirements:
  - Total Equipment Authorized divided by 84 = Daily Inspection Requirement (Authorization).
  - Total Equipment On Hand divided by 84 = Daily Inspection Requirement (Real World).
- **Step 6**—Establish realistic inspection item criteria. How long does it take to perform a periodic inspection on ALSE? This is a very important question that must be addressed to establish a maintenance scheduling program. The maintenance allocation chart listed in the equipment maintenance manual will provide a guide for the appropriate inspection times. However, these times are only for the conduct of the inspection itself and do not include the time for performing any repairs or maintenance, completing forms and records, or ordering parts, and so forth. For proper scheduling, ALSE personnel and supervisors must consider, and compensate for, these tasks along with other factors such as working hours/conditions, physical training programs, formations, duty rosters, maintenance of shop equipment, and unscheduled ALSE maintenance.
- **Step 7**—Schedule/manage equipment inspections. ALSE personnel must first appraise their work load before they can properly schedule and manage their unit equipment inspections. By working through steps 1-6, you have completed this task, but now you must regulate the inspection intervals to prevent crisis management. Your goal is to have a smooth flow of ALSE maintenance by spreading your ALSE inspections throughout the cycle and not bunching equipment into one or two months. Close coordination with operations is a must to ensure that ALSE is available to meet all mission requirements, including temporary duties or field exercises.

1. PERSONNEL AUTHORIZATIONS (TDAs AND MTOES):

	CUMULATIVE		
	OFFICERS	ENLISTED	TOTAL
CREW MEMBERS	30	15	45
NONCREW MEMBERS	0	3	3
TOTAL	30	18	48

2. AIRCRAFT AUTHORIZATIONS (TDAs AND MTOES):

TOTAL NUMBER: 15
TYPE AIRCRAFT: UH-60
SEAT AVAILABILITY: 14 PER AIRCRAFT x 15 AIRCRAFT = 210

3. DETERMINE EQUIPMENT AUTHORIZATIONS:

4. EQUIPMENT AUTHORIZATIONS (ARs, CTAs, SCs, TDAs, MTOEs) AND ON HAND QUANTITIES (INVENTORY)

	AUTHORIZED	ON-HAND	REMARKS
HELMET, SPH-4	48	48	SHORT 48
LIFE PRESERVER, LRU/10P	258	210	SHORT 6
LIFE RAFT, 7-MAN	30	24	
MASK, OXYGEN	45	45	SHORT 10
RADIO SURVIVAL, PRC-90	45	35	
SURVIVAL KIT,			
INDIVIDUAL			
COLD CLIMATE	45	42	SHORT 3
HOT CLIMATE	45	42	SHORT 3
OVERWATER	45	42	SHORT 3
VEST, BODY ARMOR	48	48	
VEST, SURVIVAL, SRU-21/P	48	48	
TOTAL	657	584	SHORTAGE 73 (GET WELL BUDGET)

5. DAILY INSPECTION REQUIREMENTS:
AUTHORIZED: 657 DIVIDED BY 84=7.8 OR 8
ON-HAND: 584 DIVIDED BY 84=6.9 OR 7

6. ESTABLISH REALISTIC INSPECTION TEAM CRITERIA:

7. SCHEDULE/MANAGE EQUIPMENT INSPECTION:

NOTE: These are sample figures only; do not use these numbers for your unit. Refer to the appropriate publications for obtaining your unit authorization figures.

Figure 2-1. Sample Equipment Scheduling Reference Guide

AVIATION LIFE SUPPORT EQUIPMENT STATUS BOARD

2-25. One method of controlling or managing a maintenance inspection program is using an ALSE status board (Figure 2-2). A status board is only as good as the information it contains; it must be current, up-to-date, and accurate to be effective useful. There are several methods of marking or identifying your ALSE; for example, color coding, numbering, using tags or labels, and so forth. However, what suits one unit may not be useful for another.

ALSE STATUS BOARD

NAME	0	HELMET	VEST SRU-21	02 MASK	0	PRC-90	COLD KIT	HOT KIT	OVER WATER KIT	ANTI-EXP. SUITS	FIRST AID KITS	7 MAN LIFE RAFT	LIFE PRES. LPU-10P	
MAJ Frank	1	FEB	FEB	FEB	1	MAR	STORAGE	APR	MAR	FEB	MAR	STORAGE	JAN	
CPT Jack	2	JAN	JAN	JAN	2	FEB	MAR	JAN	MAR	APR	FEB	MAR	APR	
CW4 Oldie	3	APR	APR	APR	3	MAR	MAR	MAR	FEB	JAN	MAR	MAR	FEB	
CW2 Goodbody	4	MAR	MAR	MAR	4	APR	FEB	MAR	JAN	APR	FEB	MAR	JAN	
SFC Riteon	5	FEB	FEB	FEB	5	JAN	APR	FEB	APR	APR	MAR	MAR	APR	
SGT Topside	6	JAN	JAN	JAN	6	FEB	JAN	STORAGE	APR	FEB	JAN	FEB	APR	
PFC Howhard	7	APT	APR	APR	7	JAN	APR	MAR	FEB	APR	MAR	STORAGE	JAN	

Figure 2-2. Sample Equipment Status Board

LIFE SUPPORT EQUIPMENT INSPECTION CALENDAR

2-26. Figure 2-3 is an inspection calendar that provides a quick reference for inspections and inspection due dates. A copy of this calendar should be located near the ALSE status board for easy access. The calendar has a 120-day inspection interval. To use this calendar, locate the month that the last inspection was performed, read across for the month the next inspection is due, then add or subtract, if any, the number of days from the due date to determine the actual day of the month the inspection will be due. For instance, if a 120-day inspection was performed on 4 January, it would be due again on 4 May with no days lost. If performed on 4 May, an inspection would be due again on 1 September, 3 days lost/subtracted from 4 September. Note that the inspection cycle, for this sample, is January, May, and September. However, if the inspection is completed on 1 September, it would be due again on 30 December (1 January with 2 days lost or subtracted). Note that this would automatically change the inspection cycle from January, May, and September to December, April, and August. ALSE personnel may want to perform periodic inspections early or late to spread equipment inspections

throughout the three cycles or to meet mission requirements. However, if you have ALSE that is overdue inspections for whatever reason or purpose, it must be properly tagged and identified as inspection due. Use the appropriate materiel condition tags.

LIFE SUPPORT EQUIPMENT INSPECTION CALENDAR

90 DAY

INSP	DUE	DAYS LOST
JAN	APR	0
FEB	MAY	+ 1
MAR	JUN	- 2
APR	JUL	- 1
MAY	AUG	- 2
JUN	SEP	- 2
JUL	OCT	- 2
AUG	NOV	- 2
SEP	DEC	- 1
OCT	JAN	- 2
NOV	FEB	- 2
DEC	MAR	0

120 DAY

INSP	DUE	DAYS LOST
JAN	MAY	0
FEB	JUN	0
MAR	JUL	- 2
APR	AUG	- 2
MAY	SEP	- 3
JUN	OCT	- 2
JUL	NOV	- 3
AUG	DEC	- 2
SEP	JAN	- 2
OCT	FEB	- 3
NOV	MAR	0
DEC	APR	- 1

Figure 2-3. Life Support Equipment Inspection Calendar

MAINTENANCE MANAGEMENT FILES

2-27. As with any maintenance function, certain files must be maintained according to AR 25-400-2 and local command policies. Files should consist of, but are not limited to, the following:

- Equipment improvement recommendations.
- Quality deficiency reports.
- Command directives.
- Inspections/surveys.
- Correspondence.
- Council meetings.
- Orders.
- Bulletins.
- Suspense files.
- Facsimile files.
- Maintenance records (per DA Pam 738-751).
- DA Forms 2028.

MAINTENANCE LIBRARY UPDATE

2-28. Periodically, but not less than quarterly, the publication files will be inspected to ensure that complete, current publications are in use. The library will consist of required publications, including the following: Army regulations, technical manuals, field manuals, common tables of allowances, supply bulletins, technical orders, Naval Air publications, technical bulletins, and supply catalogs. These publications will be used to manage the unit ALSE program. Related publications that should be included in the ALSE library include the following:

- Available ALSE/safety publications from other services.
- PB-1 series, The United States Army Aviation Digest (1955-1995)
- TB 43-PS-557, The Preventive Maintenance Monthly.
- Flightfax.
- Available ALSE pamphlets and bulletins.

2-29. To ensure that your publications are current, including any changes, you must know how to use DA Pam 25-30. This publication lists the following information:

- Blank forms.
- New forms and publications.
- Revised forms and publications.
- Changed forms and publications.
- Superseded forms and publications.
- Rescinded forms and publications.
- Obsolete forms and publications.
- Administrative publications.
- Doctrinal manuals.
- Training manuals.
- Technical manuals.
- Alphabetic cross-references.
- National stock number cross-references.
- Line item number cross-references.
- Publication control officers.
- Installation PCOs.
- Forms management officers for major commands.

EQUIPMENT ACCOUNTABILITY AND CONTROL

2-30. ALSE accountability and control procedures must be as intense and accurate as those for any other piece of equipment in the Army. Not all commands will use the same procedures. However, DA Forms 2062 (Hand Receipt/Annex Number) normally are used to identify the ALSE shop-assigned property such as vests, radios, and test equipment. ALSE personnel should also use DA Form 2062 to subhand receipt equipment (such as

helmets, vests, and flight clothing) to each individual crew member. DA Form 3749 (Equipment Receipt) with locally produced sign-in/sign-out sheets may be used to control ALSE issued for brief, recurring periods. This includes items such as radios, life preservers, or equipment that is maintained in the ALSE shop and issued or signed out for a specific mission. Local policies and procedures will determine accountability/control requirements, including inventorying ALSE.

2-31. ALSE personnel should have and use the following publications to complete these forms and records and to become familiar with property accountability and security policies and procedures:

- **DA Pam 710-2-1 and DA Pam 710-2-2.** ALSE personnel should become very familiar with these publications. They provide detailed information on conducting inspection and inventory procedures. Receipt and issue of property inventory, change of responsible officer inventory, and annual responsible officer or cyclic inventory methods are also included. They have samples and tell how to complete the following:
- **DA Form 2062 (Hand Receipt/Annex Number)** for hand-and-subhand-receipt procedures.
- **DA Form 3161 (Request for Issue or Turn-In)** and **DD Form 1150 (Request for Issue or Turn-In)** as temporary hand receipts or change documents (issue or turn-in transactions).
- **DA Form 3749 (Equipment Receipt)** for equipment receipt procedures.
- **AR 735-5.** This publication provides ALSE personnel with vital information on accountability and responsibility. Accountability is the obligation of a person to keep accurate records and is concerned primarily with maintaining formal records. Responsibility involves the basic obligation for proper custody, care, use, and safekeeping of government property. The four types of interrelated responsibility are command, supervisory, direct, and personal. It also provides definitions of the three types of property (nonexpendable, expendable, and durable) and covers accounting procedures for each. If ALSE personnel experience losses or property damage, AR 735-5 has information on methods of obtaining relief from responsibility for property through several systems. Among these are DA Form 4697 (Report of Survey), DD Form 362 (Statement of Charges), DA Form 444 (Inventory Adjustment Report), and DD Form 1131 (Cash Collection Voucher). Samples, guidelines, and limitations for each of these methods are provided. It also says that as a last resort legal advice is available along with appeal methods. While this information is not mandatory to know, well-prepared ALSE personnel will be familiar with this information and know where to locate it.
- **AR 190-51.** This publication provides information on marking Army property and securing storage structures, including the use of keys, locks, and chains.

2-32. No matter what methods he uses, the ALSE technician should always have positive control of all ALSE for inspection purposes. Local CIFs or

supply facilities may issue, exchange, or control certain ALSE items. However, there should always be a closed-loop system between these facilities and the ALSE shop. This will ensure that equipment remains fully functional and its condition is accurately identified. The ALSE supervisor may need to discuss policies and procedures with these facilities to make sure equipment that should be condemned is not reissued as serviceable. These facilities should not accept ALSE for turn-in or exchange unless it is appropriately tagged and signed by the ALSE technician according to DA Pam 738-751. In addition, exchanged or issued ALSE must be taken to the ALSE shop for proper inspection before the crew member uses it. Your unit ALSE SOP should contain specific policies and procedures.

EQUIPMENT AND COMPONENT STORAGE

2-33. Equipment and components will be stored according to the appropriate technical publication for the item and AR 95-1. Storage and inventory of pyrotechnics will follow guidance in ammunition and explosive standards and local policies. Flammables will be stored according to existing command policies and installation fire regulations. All cabinets, bins, and storage facilities will be marked to identify the equipment, components, and supplies stored in them.

Chapter 3

Aviation Life Support Equipment Shop

Organizing an ALSE shop is based on many factors such as the size of the unit and the density and type of equipment. Therefore, it is relatively impossible to standardize an ALSE shop layout. The basic layout must provide ALSE personnel with enough space to perform all required procedures for maintenance, inspections, and storage of assigned equipment. Appendix B has shop layout illustrations, including workbenches and storage areas. Information in the following paragraphs and TM 1-1500-204-23-1, chapter 11, may be used for planning purposes.

DESIGN

3-1. Normally, the shop will require at least 1,000 square feet of usable space. It should be laid out to allow the best possible use of personnel and equipment to be supported. The area will be protected from pilferage, dampness, fire, dust, insects, rodents, and direct sunlight. Shops without oxygen may have floors constructed of organic or nonorganic materials, such as concrete, which may be painted or covered with floor tile. To reduce the amount of combustible materials, shops with oxygen should have floors constructed of nonorganic materials (concrete or ceramic tile) and should not be painted. This would reduce the possibility of a fire in the event of an oxygen leak.

LOCATION

3-2. The shop should be located in an area that is not subject to excessive vibrations and noise that could disturb equipment or dust. Entrance to the shop should be limited to prevent its use as a thoroughfare or an entry from other shops. Controlling access to the shop helps prevent pilferage and unsafe shop operations. (See Appendix B [Figures B-17 through B-19] for illustrations of methods for controlling shop entrances.)

WORK AREA

3-3. Workbenches should be free from rough or abrasive materials and splinters. Tops should be made of nonporous material that will not chip or peel. Benches should contain drawers for storing tools and small parts. Areas should be well-lighted with accessible electrical outlets. Benches in oxygen-equipped ALSE shops should be equipped with individual (explosion-proof) lighting besides the normal lighting.

3-4. Areas should have access to hot and cold running water for cleaning equipment. A stainless steel basin should be located in ALSE shops equipped

with oxygen. The basin should have hot and cold water for cleaning breathing equipment.

STORAGE AREA

3-5. Storage racks, cabinets, shelves, and so forth, should be fabricated to accommodate the specific equipment involved. Storage shelves should be free from rough or abrasive materials and splinters. Wood or metal shelves may be covered with rubber matting or tile and hangers should be wood or heavy plastic material. Area should be well ventilated, out of direct sunlight, and well lighted. Storage cabinets with locks should be provided for securing test equipment, tools, equipment, and supplies. (See Appendix B.)

FITTING AREA

3-6. The fitting area should be well lighted and have enough space so that personnel can be fitted with equipment such as vests, helmets, and harnesses. A 50-square-foot area will allow for fitting two people at a time. The fitting area should be located in the work area.

OFFICE SPACE

3-7. A desk and other administrative equipment should be provided and located near the shop entrance. This will help control access to the shop. Charts, status boards, graphs, records, and administrative supplies should be within reach of the desk for easy record keeping.

SHOP EQUIPMENT

3-8. Support equipment needed to maintain ALSE varies throughout the Army because of geographical areas and mission requirements. Basic equipment (such as tools, test sets, and refrigerators) are common among all units. Specialized equipment used for maintaining flotation and oxygen equipment will be identified in the appropriate TM and located as required based on the unit mission and the operations area. See Appendix C for a consolidated list of shop equipment. The appropriate equipment manuals will also provide a list of necessary common tools required to perform maintenance in the MAC.

Note: At present, there are no standard or authorized ALSE tool kits in the Army inventory. Refer to Appendix C for a list of recommended tools.

ENVIRONMENTAL CONTROL STANDARDS

3-9. An air-conditioning system should be installed in the ALSE shop to prevent damage to the equipment from mildew and contamination caused by dust, dirt, and foreign material. A temperature between 60°F and 75°F, 60-percent relative humidity, and filtered air are preferred.

PERSONAL HYGIENE

3-10. ALSE personnel should be neat and clean at all times. Smoking, eating, or drinking will not be permitted on or around workbenches. A designated

smoking/break area should be available. Personnel with skin diseases, or contagious viral infections will not be allowed to work in the ALSE shop. Cleanliness is of the utmost importance when working with equipment. Representatives of the flight surgeon's office will periodically inspect the shop.

SHOP SAFETY

3-11. Safety practices and procedures will be followed as specified in the US Army Safety Program and unit SOPs. Specific safety precautions pertaining to personal flotation, survival, medical, and oxygen equipment are discussed in the appropriate reference publications for that piece of equipment. Some safety precautions are discussed in Appendix A.

Chapter 4

Publications Management

Army publications describe the policies and procedures used to maintain ALSE and accomplish maintenance management. Many different types of publications are required to be on hand in the ALSE shop. Some of these are interservice publications. The ALSO and ALSE technician must make sure that publications are current and that all changes are posted. To meet this requirement, ALSE personnel need a basic understanding of the Army publications system. For information on the Army publications system, refer to DA Pams 25-30, 25-33, 25-40, and AR 25-400-2.

SECTION I – ARMY PUBLICATIONS

PROCUREMENT

4-1. Procedures differ throughout the Army on how personnel request publications and blank forms for their shops. DA Pam 25-33 explains the correct procedures for obtaining publications and blank forms. ALSE personnel must work with their unit publications representatives or post Directorate of Information Management publications section.

FORMS

4-2. ALSE personnel who are required to complete the following forms or order publications through the World Wide Web should obtain assistance from publications personnel:

- DA Form 12-R (Request for Establishment of a Publications Account).
- DA Form 17 (Requisition for Publications and Blank Forms [Local Use]).
- DA Form 4569 (USAPC Requisition Code Sheet).

PUBLICATIONS LIBRARY

4-3. The importance of a current library cannot be overstressed. (See Chapter 2, "Maintenance Library Update," paragraphs 2-28 and 2-29, for more information.) ALSE personnel must follow the instructions in DA Pam 25-40 to set up and maintain a library and post changes to publications.

PUBLICATIONS DISPOSAL

4-4. Publications are disposed of when they have been rescinded, replaced, or superseded. However, old publications should not be disposed of until new publications are received.

EXCESS PUBLICATIONS

4-5. If excess publications are received in the unit, other ALSE shops should be contacted to see if they need them. If they do not, the post DOIM publications section should be contacted for disposal instructions. DA Form 12-R series should be reviewed with the unit representative and corrective action taken, if required.

SECTION II – INTERSERVICE PUBLICATIONS

AIR FORCE AND NAVY PUBLICATIONS

INTERSERVICE PUBLICATIONS ACCOUNTS

4-6. Equipment and many components of survival kits obtained through Air Force and Navy supply systems are integrated in the Army ALSE program. The ALSE technician needs the publications associated with interservice items while performing his duties. The USAPA Distribution Operations Facility should establish interservice publication accounts for the command/installation according to AR 25-36. The following paragraphs outline procedures for submitting one-time requirements and continuing/follow-on requirements according to this regulation.

SUBMITTING ONE-TIME REQUIREMENTS

4-7. **Air Force Technical Orders or Naval Publications.** To establish a one-time requirement for up to 10 copies of Air Force TOs or Naval publications, use the procedures below. AR 25-50 has instructions for preparing and managing correspondence.

4-8. **Ordering Air Force Publications.** Submit your requests for Air Force publications (Figure 4-1), preferably on letterhead stationery, with full justification, technical order numbers, quantity, POC, and DSN/commercial phone numbers to Commander, Oklahoma City Air Logistics Center, ATTN: OC-ALC/TILUB, 7851 Arnold Street, Suite 201, Tinker AFB, OK 73145-9147

4-9. **Follow-on Changes.** Periodically, after receipt of the requested Air Force publication(s), follow-on changes may be verified and requested either by writing or calling Tinker AFB Logistics Center, DSN 336-3604/3868 or commercial (405) 736-3604/3868.

4-10. **Ordering Naval Air Publications.** Submit your requests for NAVAIR publications (Figure 4-2), preferably on letterhead stationery, with full justification, publication number(s), quantity, POC, and DSN/commercial telephone numbers. Submit your requests to Commander, Naval Air Technical Data and Engineering Service Command, Naval Air Station, North Island (Distribution: Building 90), P.O. Box 357031, San Diego, CA 92135-7031

4-11. **Follow-on Changes.** Periodically, after receipt of the requested Naval publications, follow-on changes may be verified and requested by writing to the address above.

HEADING

OFFICE SYMBOL (MARKS NUMBER) DATE

MEMORANDUM FOR: Commander, Oklahoma City Air Logistics Center, ATTN: OC-ALC/TILUB, 7851 Arnold Street, Suite 201, Tinker AFB, OK 73145-9147

SUBJECT: Request for Publications

1. This unit's Aviation Life Support Systems Program requires technical publications from the Air Force to ensure proper equipment maintenance.

2. Request the following publications:

TO	QTY
14P3-1-131	3
14S1-4-2-4	3
15X-1-1	3
15X3-3-4-3	3

3. POC for this request is CW3 Doe or SFC Jones, DSN 327-1566 or commercial (527) 397-1566.

AUTHORITY LINE: (if applicable)

JOHN E. DOE
CW3, U.S. Army
Publications Control Officer

Figure 4-1. Sample Request for Air Force Publications (One-Time Requirement)

HEADING

OFFICE SYMBOL (MARKS NUMBER) **DATE**

MEMORANDUM FOR:

Commander, Naval Air Technical Data and Engineering Service Command, Naval Air Station, North Island (Bldg 90, Code 3.3), P.O. Box 357031, San Diego, CA 92135-7031

SUBJECT: Request for Publications

1. This unit's Aviation Life Support Systems Program requires technical publications from the Navy to ensure proper equipment maintenance.

2. Request the following publications:

NAVAIR	QTY
13-1-6.1	3
13-1-6.4	3
13-1-6.7	3

3. POC for this request is CW3 Doe or SFC Jones, DSN 327-1566 or commercial, (527) 397-1566.

AUTHORITY LINE: (if applicable)

JOHN E. DOE
CW3, U.S. Army
Publications Control Officer

Figure 4-2. Sample Request for Naval Publications (One-Time Requirement)

SUBMITTING CONTINUING/FOLLOW-ON REQUIREMENTS

4-12. **Air Force or Navy Publications Account/Follow-on Changes**. To establish an Air Force or Navy publications account (Figure 4-3) and to ensure follow-on changes, submit a request for an account to HQDA, USAPA, ATTN: JDHQSV-PAL, 2461 Eisenhower Avenue, Alexandria, VA 22331-0302.

4-13. **Ordering Publications.** Include full justification and identify the publication number, quantity, and POC with DSN and commercial telephone numbers. Route letter through and check format with PCO.

HEADING

OFFICE SYMBOL (MARKS NUMBER) DATE

MEMORANDUM THRU: Installation PCO

MEMORANDUM FOR; HQDA, USAPA, ATTN: JDHQSV-PAL, 2461 Eisenhower Avenue, Alexandria, VA 22331-0302

SUBJECT: Request for Publications Account

1. This unit's Aviation Life Support Systems Program requires technical publications from the Air Force to ensure proper equipment maintenance. Request a publication's account be established for this unit.

2. Publication requirements:

TO/NAVAIR	QTY
(List all TOs/NAVAIRs required)	(List quantity required)

3. Request all necessary forms and information to order publications. Account must be established for initial an follow-on changes.

4. POC for this request is CW3 Doe or SFC Jones, DSN 327-1566 or commercial (527) 397-1566.

AUTHORITY LINE: (if applicable)

JOHN E. DOE
CW3, U.S. Army
Publications Control Officer

Figure 4-3. Sample Request for Air Force/Navy Publications Account

AIR FORCE ACCOUNTS

4-14. **Requests for Air Force Forms.** Request copies of AFTO Form 43 (Request for USAF Technical Order Distribution Office Code Assignment or Change) (Figure 4-4) and TO 00-5-2. The ATOMS replaced some AFTO forms required earlier. AFTO Form 187 (Technical Order Publications Request), not automated, is still used.

]

REQUEST FOR USAF TECHNICAL ORDER DISTRIBUTION OFFICE CODE ASSIGNMENT OR CHANGE
(See T.O. 00-5-2 FOR USE OF THIS FORM)

TYPE OF REQUEST
[X] INITIAL
[ ] REVISED
[ ] CANCELLATION

T.O. DISTRIBUTION OFFICE CODE

DATE 1 Oct 1998

1. FROM
23 FTF/DOL
Bldg 6620 Andrews Ave.
Ft. Rucker AIN, AL 36362-5358

2. TO *(Place in envelope and mail to)*
OC-ALC/TILUB
7851 Arnold St, Ste 201
Tinker AFB OK 73145-9147

3. T.O. MAILING ADDRESS AND 9 DIGIT-ZIP CODE
23 FTF/DOL
Bldg 6620 Andrews Ave.
Ft. Rucker AIN, AL 36362-5358
ATTN: SRA Alarie

4. TODO TYPE

	a. BASE TODO *(T.O. 00-5-2, Para 1-4.1.)*		e. ORGANIZATION IS A CONTRACTOR WITH A UNITED STATES GOVERNMENT CONTRACT *(Indicate Contract Number and Issuing U.S. Government Agency) (Use reverse side if necessary)*
X	b. UNIT/ACTIVITY TODO *(T.O. 00-5-2, Para 1-4.3.)*		
X	c. ORGANIZATION IS AN ELEMENT OF THE UNITED STATES AIR FORCE *(Indicate Major Command)* AETC		f. CANCELLATION DATE *(Date on which code and all requirements are to be cancelled unless otherwise advised by revised AFTO Form 43).*
	d. ORGANIZATION IS AN ELEMENT OF THE UNITED STATES GOVERNMENT BUT NOT AIR FORCE *(Indicate Department or Agency)*		g. OTHER *(Describe organization in detail. Use reverse side if necessary)*

5. SECURITY LEVEL AUTHORIZED *(The organization listed above has adequate facilities, equipment, and properly cleared personnel to receive and safeguard classified Technical Orders up to and including (reflect Security Clearance).*
SECRET

6. TODO PERSONNEL *(The following personnel are authorized to sign and approve T.O. requirements as TODO IAW T.O. 00-5-2. Personnel listed below are conversant with the provisions of T.O. 00-5-2 and will assure compliance therewith.)*

NAME, GRADE, TITLE AND SIGNATURE *(Include phone and E-Mail address)*	NAME, GRADE, TITLE AND SIGNATURE *(Include phone and E-Mail address)*	NAME, GRADE, TITLE AND SIGNATURE *(Include phone and E-Mail address)*
Michael R. Alarie Michael R. Alarie,SRA, USAF NCOIC, 23d Life Support DSN: 558-1108 AlarieM@Rucker.AF.Mil		

7. GOVERNMENT APPROVING AGENCY *(The following United States Government Personnel are authorized to sign and approve technical order requirements as USAF approving agent IAW T.O. 00-5-2).*

NAME, GRADE, TITLE AND SIGNATURE *(Include phone)*	NAME, GRADE, TITLE AND SIGNATURE *(Include phone)*	NAME, GRADE, TITLE AND SIGNATURE *(Include phone)*

8. COMMAND/CONTRACTING OFFICER APPROVAL *(The above request is verified and approved by this office. Approval of this request is considered in the best interests of the United States Government.)*

APPROVING OFFICE *(Address, Phone, USAF Major Command/U.S. Government Office Approval)*	NAME, GRADE, TITLE, SIGNATURE *(Major Staff Officer or authorized Contracting Officer)*
23 FTF/CC, DSN:558-0290, MAJCOM: AETC Bldg 6620 Andrews Ave. Ft. Rucker AIN, AL 36362-5358	Richard A. Kianka, Lt Col, USAF Commander, 23 FTF

9. FOR AFMC TODO CODE MANAGEMENT ACTIVITY USE ONLY

[ ] APPROVED [ ] DISAPPROVED	REMARKS OR SPECIAL INSTRUCTIONS *(Continue on reverse)*

AFTO FORM 43, JUN 98 *(EF-V3)* PREVIOUS EDITION IS OBSOLETE

Figure 4-4. Sample Air Force Technical Order Form 43

4-15. **Ordering Publications.** Upon receipt of forms, identify required publications and complete two copies of AFTO Form 43 and mail the copies to Commander, Oklahoma City Air Logistics Center (see paragraph 4-8).

NAVY ACCOUNTS

4-16. **Requests for Naval Supply Information.** Request the following supply material:

- NAVSUP 2002.
- NAVAIR 00-25-100 (Web Site: www.nll.navsup.navy.mil).

4-17. **Identifying and Ordering Publications/Forms**. Upon receipt of the above material, identify required publications and forms—

- Submit DD Form 1348/1348m (Single Line Item Requisition System Document [Manual]/Single Line Item Requisition System Document [Mechanical]) (Figures 4-5a and b) to initiate a one-time issue of basic publications and forms. Forward the form to Publications and Forms Branch, Naval Inventory Control Point, ATTN: Customer Service, Building 1, Room 3401, 700 Robbins Avenue, Philadelphia, PA 19111-5098.
- Submit automatic distribution ordering blank (Figure 4-6) to initiate the follow-on changes. Complete and mail two copies to Naval Air Technical Data and Engineering Services Command, Naval Air Station, North Island, P.O. Box 357031, San Diego, CA 92135-7031 or use the Streamline Automatic Logistics Transmission System (SALTS) and send changes to adrl@natec.navy.mil.

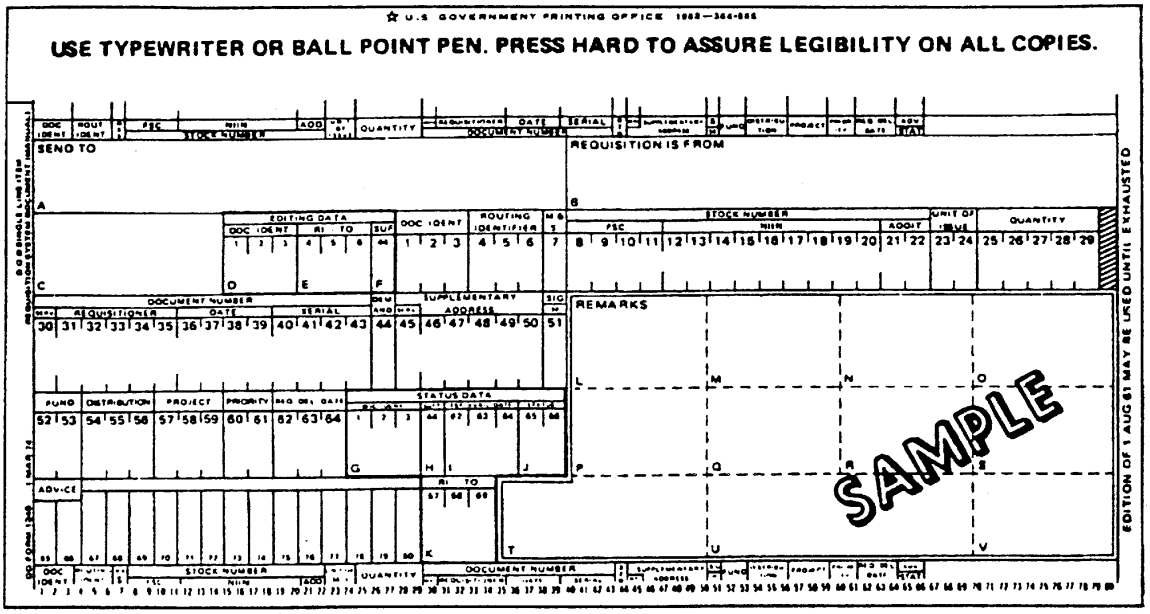

Figure 4-5a. Sample DD Form 1348

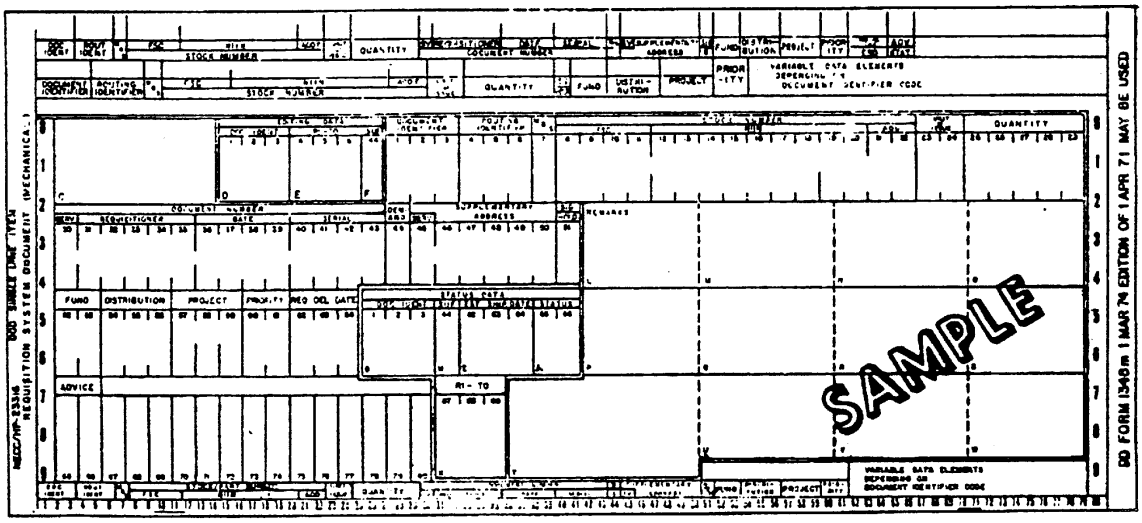

Figure 4-5b. Sample DD Form 1348m

ACTIVITY NAME	DATE	ACTIVITY ADDRESS CODE									
2797 AVN. Co	1 SEP 89	1	2	3	4	5	6	7	8	9	10
		W	K	A	2	6					

TECHNICAL MANUALS (Cont)	CODE	QTY
11-85-5 ACFT ROCKET OPERATION	GP200	
11-100-1 ACFT/ EQT CRTG ACTUATED DEVICES	GP205	
13-1-6.1 INFLATABLE SURVIVAL EQT	GP210	/
13-1-6.2 PERSONNEL PARACHUTES	GP212	
13-1-6.3 SURVIVAL KITS/ITEMS	GP214	/
13-1-6.4 OXYGEN EQT	GP216	/
13-1-6.5 HLCPR RESCUE/SURVIVAL	GP218	/
13-1-6.7 PERSONNEL PROTECTING EQT	GP219	/
15-01-500 AIRCRAFT PRESERVATION	GP240	
15-02-1 ENGINE PRESERVATION, DESERT STORAGE	GP250	
15-02-500 ENGINE PRESERVATION	GP260	
16-1-520 STD FLT INSPECTION	GP267	
16-1-540 AVIONIC CORROSION CONTROL	GP270	
17-1-106 PORTABLE LATHE GRINDERS	GP274	
17-1-108 TORQUE TOOLS USE	GP276	
17-1-114 LIFTING SLINGS	GP278	
17-1-118 EXT PWR PLUGS REPAIR	GP280	
17-1-119 RAY CHEM ELECTRONIC EQUIP MAINT	GP283	
17-1-123 TIRE INFLATOR KIT	GP286	
17-1-124 MINIATURE COMPONENT REPAIR	GP287	
17-1-125 CLEANING/CORROSION	GP288	
17-1-126 STD CONFIG ELEC CABLES	GP289	

TECHNICAL MANUALS (Cont)	CODE	QTY
17-1-524 WIRE CABLE SPLICING	GP292	
17-1-528 TORQUE PROBLEM	GP294	
17-1-537 AIRCRAFT SECURING	GP296	
17-5AB-35 ULTRASONIC CLEANING	GP297	
17-5AB-40 FILTER CLEANER, ULTRASONIC	GP299	
17-15-50 OIL ANAYLSIS LAB MANUAL	GP300	
17-15BAD-1 BATTERIES CARE/USE	GP320	
17-15E-52 HYD FLUID ANAYSIS KIT	GP328	
17-40AR-163-1 PORT MICROFILM VWR OPER MAINT	GP350	
17-40MIARS-1 AR-150A INTMD MAINT W/IPB	GP353	
17-40MIARS-2 AR 151A OPER MAINT W/IPB	GP354	
17-40MIARS-3 AR-150A OPER/ORG MAINT W/IPB	GP355	
19-1-127 GSE PREFERRED LIST	GP365	
19-200-1 JET ENGINE CORROSION CONTROL CART	GP375	
19-70-46 ACFT JACKS INDEX/APPL	GP398	
19-100-1 WPNS/EXPLOSIVES HNDLG EQT	GP400	
19-100-1-2 WPNS/EXPLOSIVE EQT CATALOG	GP405	
19-100-2 SHPBD WPNS HNDLG EQT	GP410	
28-SSQ-500 SONOBUOY REF GUIDE O/I/D MAINT	GP500	
28-SSQ-500-1 SONOBUOY INST O/I MAINT	GP505	

SAMPLE

Figure 4-6. Sample Automatic Distribution Ordering Blank

Chapter 5

Equipment Records

ALSE personnel must be familiar with DA Pam 738-750 and DA Pam 738-751. These pamphlets tell the equipment records required to control, manage, and maintain ALSE. For a consolidated list of these forms and their use, see Appendix D.

FORMS AND RECORDS

5-1. DA Pam 738-750 and DA Pam 738-751 describe the proper use, preparation, and disposition of forms and records used to—

- Record the maintenance and services performed or needed on ALSE.
- Prepare equipment improvement recommendations and quality deficiency reports.
- Record and report all modification work orders.
- Record needed information to be used for evaluating materiel condition.
- Record and report data for use in designing new equipment, redesigning standard equipment, and improving products.
- Collect inventory, operational, and maintenance data on special, onetime studies.

RECORD TYPES

5-2. ALSE personnel use the following types of records:

- **Operational records**. To control equipment operation and use and for operational planning.
- **Maintenance records**. To control maintenance scheduling, inspections, and repair work loads. They provide a standard method for recording repairs.
- **Materiel condition tags and labels**. To show the identity and condition of ALSE. These tags and labels are used besides the other forms, records, and tags.
- **ALSE records**. To record inventories, inspections, and maintenance requirements.

RECORD REPLACEMENT

5-3. Replacement records will be prepared only when the original forms are completed, lost, or damaged to the extent that they cannot be read. When lost or damaged forms need to be replaced, make an entry in the remarks section or the top or bottom margin of the new form. Enter "New Form Initiated," with the date and signature of the qualified supervisor. All forms and records

will transfer with the equipment (such as transfer of helmet with crew member according to CTA 50-900 for permanent change of station).

BLANK FORMS

5-4. An adequate supply of blank forms must be on hand at all times. Specific quantities depend on such things as density of equipment and type of operations. However, enough should be on hand to support operations for 30 days.

Chapter 6

Supply

The Army's present ALSE inventory includes items from the Army, Air Force, and Navy. To assist supply personnel in procuring equipment, ALSE personnel must know basic supply procedures. Most of the information needed for procuring ALSE is on CD-ROM. ALSE personnel must have on hand, or have direct access to, a computer with CD-ROM to verify information.

PUBLICATIONS

6-1. The following publications should be available to make sure that ALSE personnel provide supply personnel with correct and updated information:

- **Federal Logistics (FEDLOG)**—
  - Lists national stock numbers, reference numbers, part numbers, and commercial and government entity codes cross-referenced to each other.
  - Lists reference numbers in alphanumeric sequence.
  - Lists NSNs in national item identification number sequence.
  - Lists CAGE codes in alphanumeric sequence.
  - Contains the Army Master Data File—the official source of current supply management data for items managed or used by the Department of the Army—published monthly.
  - Is published quarterly on CD-ROM.
- **Universal Data Repository (UDR)**—
  - Identifies those medical and dental items that are essential for wartime medical issues of the military services.
  - Aids the medical and dental industry in satisfying war surge and sustainment of medical material requirements.

6-2. These other publications provide data and guidance needed. Request them through normal channels.

- **Supply catalogs**—provide data needed to identify and manage items used by the Army.
- **Common tables of allowances**—prescribe allowances for clothing and equipment (CTA 50-900), field and garrison furnishings and equipment (CTA 50-909), and medical items (CTA 8-100).
- **SB 708-48**—has two sections used for cross-referencing CAGE codes and manufacturers' names and addresses. Section A is name to code and Section B is code to name. SB 708-48 is published bimonthly on microfiche.

- **DA Pam 710-2-1**—provides guidance on establishing and maintaining a PLL.
- **DA Pam 710-2-2**—provides guidance on establishing and maintaining shop stock procedures.
- **AR 702-18**—prescribes uniform policies and procedures, responsibilities, guidance for the development, preparation, publication, and maintenance of storage standards for Department of Defense, Government Service Agencies, and Coast Guard managed materials.

AVIATION LIFE SUPPORT EQUIPMENT REQUESTS

6-3. Local procedures differ throughout the Army as to how unit personnel request equipment and repair parts from the supply sections. Commanders may require requests to be made on memorandums, locally produced "want slips" (see Figure 6-1), or official supply forms. Regardless of the procedures, ALSE personnel must be able to provide the following information to supply personnel, if requested:

- National stock number.
- Part number.
- Nomenclature.
- Source of supply.
- Acquisition advice code.
- Material category structure code.
- Publication information obtained from (ARMYLOG, FEDLOG, or MEDCAT as applicable).
- Publication, page, paragraph, figure, and/or item number.
- Unit of issue.
- Quantity.

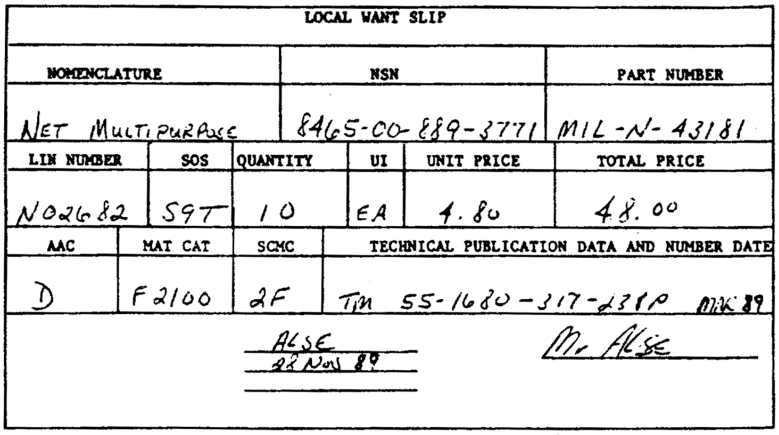

LOCAL WANT SLIP					
NOMENCLATURE		NSN			PART NUMBER
NET MULTIPURPOSE		8465-00-889-3771			MIL-N-43181
LIN NUMBER	SOS	QUANTITY	UI	UNIT PRICE	TOTAL PRICE
N02682	S9T	10	EA	4.80	48.00
AAC	MAT CAT	SCMC	TECHNICAL PUBLICATION DATA AND NUMBER DATE		
D	F2100	2F	TM 55-1680-317-23P MAY 89		
ALSE 22 Nov 89			Mr ALSE		

Figure 6-1. Sample Want Slip (Local Form)

FORMS

6-4. ALSE personnel must coordinate with supply if required to complete the following forms. (See DA Pam 710-2-1 for their use, preparation, and disposition.)

- **DA Form 581 (Request for Issue or Turn-In of Ammunition) and DA Form 581-1 (Request for Issue and Turn-In of Ammunition (Continuation Sheet)**. (See Figures 6-2 and 6-3a and 6-3b.) These forms have been revised eliminating the requirement for a serial number. Now authorized for use as electronic forms, these forms are available on the Electronic Forms page of www.usapa.army.mil. Use this form to—
  - Request ammunition and explosives.
  - Issue ammunition and explosives.
  - Turn in unserviceable and serviceable ammunition, used ammunition, and used ammunition packing material.
- **DA Form 2765-1 (Request for Issue or Turn-In)**. (See Figures 6-4 and 6-5.) Use this form to—
  - Request expendable, durable, or nonexpendable single-line item with NSN listed in the AMDF.
  - Turn in all other property not covered by DA Form 581or DD Form 1348-1 (DOD Single Line Item Release/Receipt Document), excess serviceable self-service supply center items, and property found on the installation.
- **DA Form 3161 (Request for Issue or Turn-In).** (See Figures 6-6 and 6-7.) Use this form for issue and turn-in transactions between the PBO, the hand receipt holder, and the subhand receipt holder. DD Form 1150 (Request for Issue or Turn-In), DD Form 1348-1, and DD Form 1348-1A may be used instead of DA Form 3161 as a change document. Check local procedures.
- **DD Form 1348-6 (DOD's Single Line Item Requisition System Document [Manual Long Form]).** (See Figures 6-8 and 6-9.) Use this form to request non-NSN single-Line item, an NSN single-line item when the NSN is not listed in the AMDF, MWO and modification kits, classified items, and all exceptional data requests. Most Air Force and Navy items require DD Form 1348-6 (non-AMDF and exceptional data).
- **DD Form 448 (Military Interdepartmental Purchase Request [MIPR]).** (See Figure 6-10.) Installation/command supply uses this form in support of DA Form 2765-1 or DD Form 1348-6. Some items (such as life rafts and oxygen testers obtained from the Air Force and Navy) may require this form.

REQUEST FOR ISSUE AND TURN-IN OF AMMUNITION

For use of this form, see AR 710-2; the proponent agency is DCSLOG

1. Issue	X	3. DOCUMENT NO. WOU9Y0-9119-5000	4.	5. PAGE 1 OF 1	6. DOCUMENT SERIAL NO. AA581
2. Turn-In					

7. SEND TO AMMO SUPPLY POINT FT RUCKER, AL WOU94B W31BMZ	8. REQUEST FROM 1/14TH AVN REGT FT RUCKER, AL UIC: WOU912 WOU9Y0	9. DATE MATERIEL REQUIRED 29 APRIL 99 1300HRS	10. PRIORITY	11. ALLOCATION PERIOD 3RD QTR	12. DODACC WOU9Y0
		13a. REQUESTED BY JOHN SMITH, MAJ,AV	13b. DATE 9119	13c. SIGNATURE	
		14a. APPROVED BY JANE DOE, AM, RTMD	14b. DATE 9119	14c. SIGNATURE	

15. ITEM	16. DOCIC	17. NSN	18. NOMENCLATURE	19. UI	20. QTY. REQUESTED/ TURNED IN	21. TEC	22. ACTION CODE	23. QTY. ISSUED/ RECEIVED	24. LOT/SERIAL NO.	25. CC	26. POSTED BY	27. DATE
1	A576	1305-00-028-6603	CTG .50 CAL BALL	EA	200	AQS	TIS					
------	------	----------	LAST ITEM	------	----------	------	----------	----------	----------	------	----------	----------

SAMPLE

28. REMARKS

QUANTITIES REQUESTED ARE WITHIN AUTHORIZED TRAINING ALLOCATION
TRAINING DATES ARE 29 APR 99 - 5 MAY 99

FOR USE AT FT. RUCKER TRAINING AREA

29. RELATED DOCUMENT SERIAL NOS.

30a. ISSUED BY	30c. DATE	31a. RECEIVED BY	31c. DATE	32. TAMIS CONTROL NO.
30b. SIGNATURE		31b. SIGNATURE		

DA FORM 581, AUG 89 EDITION OF MAY 64 IS OBSOLETE

Figure 6-2. Sample DA Form 581 as a Request for Issue

REQUEST FOR ISSUE AND TURN-IN OF AMMUNITION
For use of this form, see AR 710-2; the proponent agency is DCSLOG

1. Issue: 2. Turn-In: X
3. DOCUMENT NO.: WOU9Y0-9119-5001
4.
5. PAGE: 1 OF 1
6. DOCUMENT SERIAL NO.: AA581

7. SEND TO: AMMO SUPPLY POINT, FT RUCKER, AL — WOU94B W31BMZ
8. REQUEST FROM: 1/14TH AVN REGT, FT RUCKER, AL — UIC: WOU912 WOU9Y0
9. DATE MATERIEL REQUIRED: 10 MAY 99 1300HRS
10. PRIORITY:
11. ALLOCATION PERIOD: 3RD QTR
12. DODACC: WOU9Y0
13a. REQUESTED BY: JOE SMITHY, SFC,AV
13b. DATE: 9130
13c. SIGNATURE:
14a. APPROVED BY: JANET DOE, AM, RTMD
14b. DATE: 9130
14c. SIGNATURE:

15. ITEM	16. DOCIC	17. NSN	18. NOMENCLATURE	19. UI	20. QTY. REQUESTED/ TURNED IN	21. TEC	22. ACTION CODE	23. QTY. ISSUED/ RECEIVED	24. LOT/SERIAL NO.	25. CC	26. POSTED BY	27. DATE
1	A576	1305-00-028-6603	CTG .50 CAL BALL	EA	100	AQS	TAR					
-------	-------	----------	LAST ITEM	-------	----------	------	--------	----------	----------	-------	----------	----------

SAMPLE

28. REMARKS
THE ABOVE ITEMS DRAWN ON DOCUMENT NUMBER WOU9Y0-9119-5000 WERE NOT EXPENDED.
ALL OTHER ITEMS DRAWN ON THAT DOCUMENT NUMBER WERE PROPERLY EXPENDED.
RESIDUE TURN-IN IS UNDER DOCUMENT NUMBER WOU9Y0-9119-5002

FOR USE AT FT. RUCKER TRAINING AREA

29. RELATED DOCUMENT SERIAL NOS.

30a. ISSUED BY
30b. SIGNATURE
30c. DATE
31a. RECEIVED BY
31b. SIGNATURE
31c. DATE
32. TAMIS CONTROL NO.

DA FORM 581, AUG 89 — EDITION OF MAY 64 IS OBSOLETE

Figure 6-3a. Sample DA Form 581 as a Request for Turn-In

REQUEST FOR ISSUE AND TURN-IN OF AMMUNITION
For use of this form, see AR 710-2; the proponent agency is DCSLOG

1. Issue: 2. Turn-In: X
3. DOCUMENT NO.: WOU9Y0-9119-5002
4.
5. PAGE: 1 OF 1
6. DOCUMENT SERIAL NO.: AA581

7. SEND TO: AMMO SUPPLY POINT, FT RUCKER, AL — WOU94B W31BMZ
8. REQUEST FROM: 1/14TH AVN REGT, FT RUCKER, AL — UIC: WOU912 WOU9Y0
9. DATE MATERIEL REQUIRED: 10 MAY 99 1300HRS
10. PRIORITY:
11. ALLOCATION PERIOD: 3RD QTR
12. DODACC: WOU9Y0
13a. REQUESTED BY: JOE SMITHY, SFC,AV
13b. DATE: 9130
13c. SIGNATURE:
14a. APPROVED BY: JANET DOE, AM, RTMD
14b. DATE: 9130
14c. SIGNATURE:

15. ITEM	16. DOCIC	17. NSN	18. NOMENCLATURE	19. UI	20. QTY. REQUESTED/ TURNED IN	21. TEC	22. ACTION CODE	23. QTY. ISSUED/ RECEIVED	24. LOT/SERIAL NO.	25. CC	26. POSTED BY	27. DATE
1	A576	NSN	CASE CTG, FIRED BRASS	LB	12	AQS	TAR					
		NSN	LINKS .50 CAL	LB	5	AQS	TAR					
		8140-00-960-1699	BOX METAL M2A1	EA	1	AQS	TAR					
------	------	----------	LAST ITEM	------	----------	------	--------	----------	----------	------	----------	----------

SAMPLE

28. REMARKS
THE ABOVE ITEMS WERE DRAWN ON DOCUMENT NUMBER WOU9Y0-9119-5000 AND WERE PROPERLY EXPENDED.
ALL OTHER ITEMS DRAWN ON THAT DOCUMENT NUMBER ARE BEING RETURNED UNDER DOCUMENT NUMBER WOU9Y0-9119-5001.

CONTENTS HAVE BEEN INSPECTED. CONTENTS DO NOT CONTAIN ANY LIVE ROUNDS, UNFIRED PRIMERS, EXPLOSIVES, OR OTHER DANGEROUS MATERIALS. S IGNED_____

29. RELATED DOCUMENT SERIAL NOS.

30a. ISSUED BY
30b. SIGNATURE
30c. DATE
31a. RECEIVED BY
31b. SIGNATURE
31c. DATE
32. TAMIS CONTROL NO.

DA FORM 581, AUG 89 — EDITION OF MAY 64 IS OBSOLETE

Figure 6-3b. Sample DA Form 581 as a Request for Turn-In of Residue

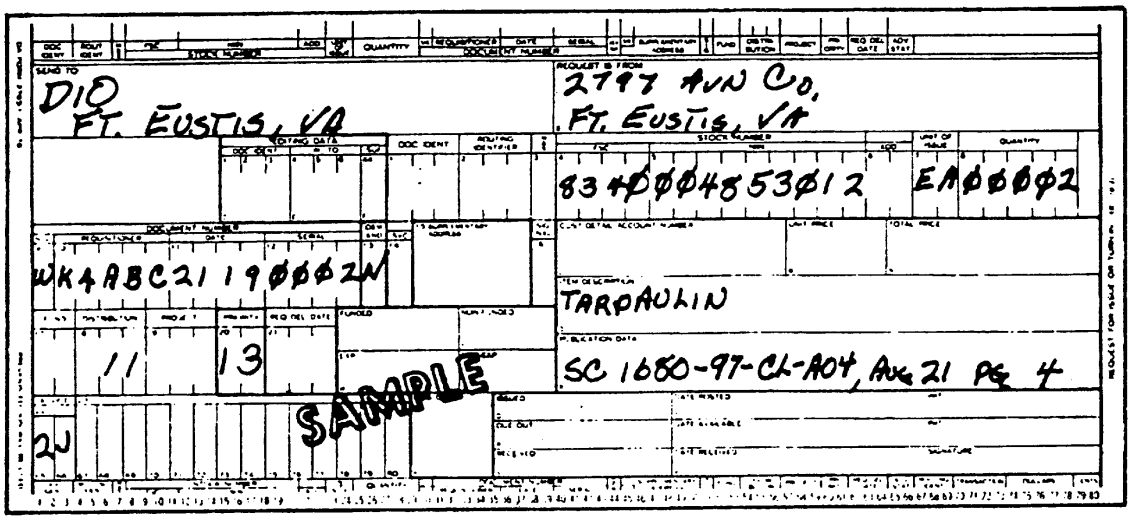

Figure 6-4. Sample DA Form 2765-1 as a Request for Issue

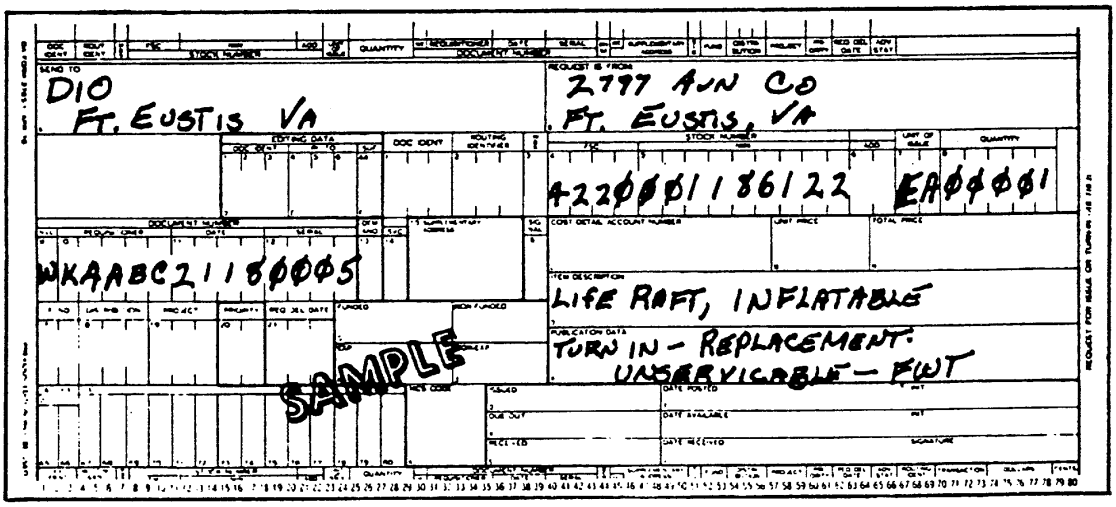

Figure 6-5. Sample DA Form 2765-1 as a Turn-In

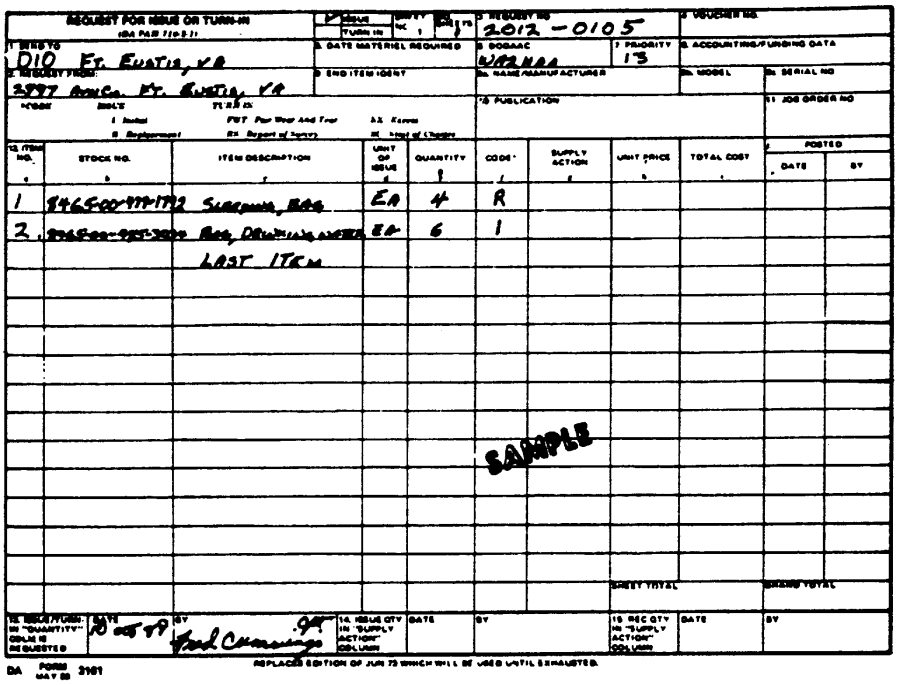

REQUEST FOR ISSUE OR TURN-IN (DA PAM 710-2-1)

ISSUE / TURN-IN — SHEET NO 1 OF 1 — 3. REQUEST NO 2012-0105 — 4. VOUCHER NO.

1. SHIP TO: DIO Ft. Eustis, VA — 5. DATE MATERIEL REQUIRED — 6. DODAAC: W22NAA — 7. PRIORITY: 13 — 8. ACCOUNTING/FUNDING DATA

2. REQUEST FROM: 2797 AMCo. Ft. Eustis, VA — 9. END ITEM IDENT — 9a. NAME/MANUFACTURER — 9b. MODEL — 9c. SERIAL NO

*CODE — ISSUE: 1 Initial, 2 Replacement — TURN IN: FOT Fair Wear And Tear, 3X Excess, 2X Report of Survey, 3X Stop of Charges — 10. PUBLICATION — 11. JOB ORDER NO

12. ITEM NO.	STOCK NO.	ITEM DESCRIPTION	UNIT OF ISSUE	QUANTITY	CODE*	SUPPLY ACTION	UNIT PRICE	TOTAL COST	POSTED DATE	POSTED BY
1	8465-00-999-1772	Suspender, Bag	EA	4	R					
2	8465-00-997-3000	Bag, Drawstring, Water	EA	6	1					
		LAST ITEM								
							SHEET TOTAL		SHEET TOTAL	

13. ISSUE/TURN-IN QUANTITY COLUMN IS REQUESTED — DATE 10 OCT 99 — BY Fred Cummings — 14. ISSUE QTY IN "SUPPLY ACTION" COLUMN — DATE — BY — 15. REC QTY IN "SUPPLY ACTION" COLUMN — DATE — BY

SAMPLE

DA FORM MAY 85 3161 — REPLACES EDITION OF JUN 72 WHICH WILL BE USED UNTIL EXHAUSTED.

Figure 6-6. Sample DA Form 3161 as a Request for Issue

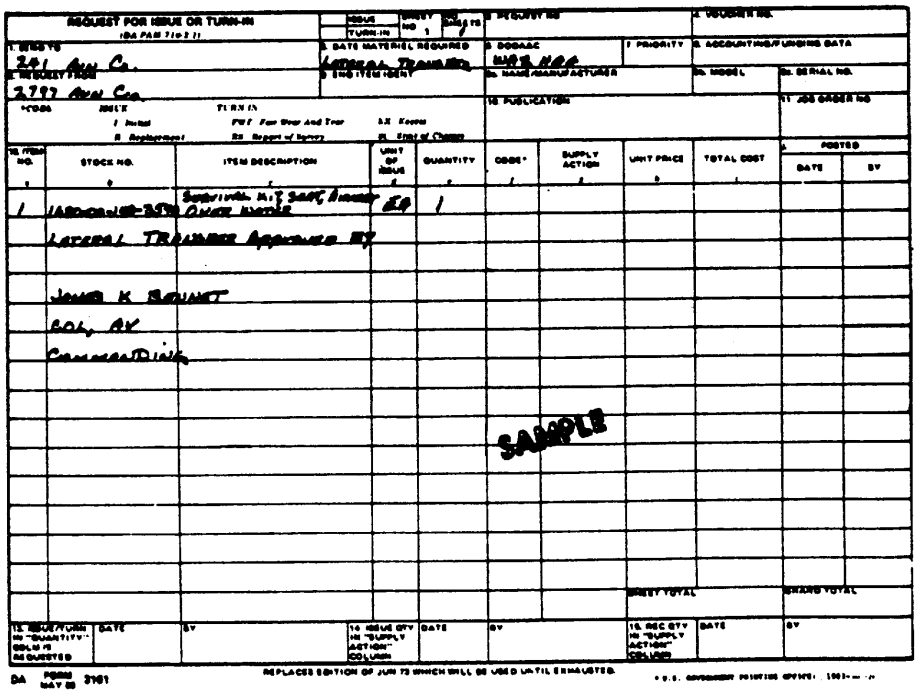

REQUEST FOR ISSUE OR TURN-IN (DA PAM 710-2-1)

ISSUE / TURN-IN — SHEET NO 1 OF 1 — 3. REQUEST NO — 4. VOUCHER NO.

1. SHIP TO: 281 Aun Co. — 5. DATE MATERIEL REQUIRED: LATERAL TRANSFER — 6. DODAAC: W22NAA — 7. PRIORITY — 8. ACCOUNTING/FUNDING DATA

2. REQUEST FROM: 2797 Aun Co. — 9. END ITEM IDENT — 9a. NAME/MANUFACTURER — 9b. MODEL — 9c. SERIAL NO.

*CODE — ISSUE: 1 Initial, 2 Replacement — TURN IN: FOT Fair Wear And Tear, 3X Excess, 2X Report of Survey, 3X Stop of Charges — 10. PUBLICATION — 11. JOB ORDER NO

12. ITEM NO.	STOCK NO.	ITEM DESCRIPTION	UNIT OF ISSUE	QUANTITY	CODE*	SUPPLY ACTION	UNIT PRICE	TOTAL COST	POSTED DATE	POSTED BY
1	1680-00-180-3590	Survival Kit, Sea, Aircraft Over Water	EA	1						
	LATERAL TRANSFER APPROVED BY									
	JAMES K BARNETT									
	COL, AV									
	COMMANDING									
							SHEET TOTAL		SHEET TOTAL	

13. ISSUE/TURN-IN QUANTITY COLUMN IS REQUESTED — DATE — BY — 14. ISSUE QTY IN "SUPPLY ACTION" COLUMN — DATE — BY — 15. REC QTY IN "SUPPLY ACTION" COLUMN — DATE — BY

SAMPLE

DA FORM MAY 85 3161 — REPLACES EDITION OF JUN 72 WHICH WILL BE USED UNTIL EXHAUSTED.

Figure 6-7. Sample DA Form 3161 as a Lateral Transfer

DOCUMENT IDENTIFIER	ROUTING IDENTIFIER	M & S	ITEM IDENTIFICATION* (NSN, FSCM/Part No., Other) FSCM	PART NUMBER	UNIT OF ISSUE	QUANTITY	DOCUMENT NUMBER SERV	REQUISITIONER
1 2 3	4 5 6	7	8 9 10 11 12	13 14 15 16 17 18 19 20 21 22	23 24	25 26 27 28 29	30	31 32 33 34 35
			18560	T5-23	EA	ØØØØ1	W	K4ABC

DOCUMENT NO. (Cont.) DATE	SERIAL	DEMAND	SERV	SUPPLEMENTARY ADDRESS	SIGNAL	FUND CODE	DISTRIBUTION CODE	PROJECT CODE	PRIORITY	REQUIRED DELIVERY DAY OF YEAR	ADVICE CODE	BLANK
36 37 38	39 40 41 42	43 44	45	46 47 48 49 50	51	52 53	54 55 56	57 58 59	60 61	62 63 64	65 66	67 68 69
211	8ØØ1	3N							13			

70 71 72 73 74 75 76 77 78 79 80	REJECT CODE (FOR USE BY SUPPLY SOURCE ONLY) 65 66	IDENTIFICATION DATA
		*1. MANUFACTURER'S CODE AND PART NO. (When they exceed card columns 8 thru 22)
		2. MANUFACTURER'S NAME

3. MANUFACTURER'S CATALOG IDENTIFICATION	4. DATE (YYMMDD)	5. TECHNICAL ORDER NUMBER
6. TECHNICAL MANUAL NUMBER PG 3 TO 14S10-2-2 AUG 84	7. NAME OF ITEM REQUESTED TEST SET, DISTRESS MARKER	
8. DESCRIPTION OF ITEM REQUESTED		8a. COLOR 8b. SIZE
9. END ITEM APPLICATION		9a. SOURCE OF SUPPLY
9b. MAKE	9c. MODEL NUMBER / 9d. SERIES	9e. SERIAL NUMBER
10. REQUISITIONER (Clear text name and address)	11. REMARKS SAMPLE	

FOLD HERE

DD Form 1348-6, FEB 85 *Edition of Apr 77 may be used until exhausted.*

*U.S. GPO: 1985-485-306

DOD SINGLE LINE ITEM REQUISITION SYSTEM DOCUMENT *(MANUAL - LONG FORM)*

Figure 6-8. Sample DD Form 1348-6 as a Request for Issue on Non-NSN Items

DOCUMENT IDENTIFIER	ROUTING IDENTIFIER	M & S	ITEM IDENTIFICATION* (NSN, FSCM/Part No., Other) FSCM	PART NUMBER	UNIT OF ISSUE	QUANTITY	DOCUMENT NUMBER SERV	REQUISITIONER
1 2 3	4 5 6	7	8 9 10 11 12	13 14 15 16 17 18 19 20 21 22	23 24	25 26 27 28 29	30	31 32 33 34 35
			1856	OTS-23	EA	ØØØØ1	W	K4ABC

DOCUMENT NO. (Cont.) DATE	SERIAL	DEMAND	SERV	SUPPLEMENTARY ADDRESS	SIGNAL	FUND CODE	DISTRIBUTION CODE	PROJECT CODE	PRIORITY	REQUIRED DELIVERY DAY OF YEAR	ADVICE CODE	BLANK
36 37 38 39	40 41 42	43	44 45 46	47 48 49 50	51	52 53	54 55 56	57 58 59	60 61	62 63 64	65 66	67 68 69
2118	Ø Ø 13	R							13		2B	

	REJECT CODE (FOR USE BY SUPPLY SOURCE ONLY)	IDENTIFICATION DATA
70 71 72 73 74 75 76 77 78 79 80	65 66	*1. MANUFACTURER'S CODE AND PART NO. (When they exceed card columns 8 thru 22)
		2. MANUFACTURER'S NAME

3. MANUFACTURER'S CATALOG IDENTIFICATION

4. DATE (YYMMDD)

5. TECHNICAL ORDER NUMBER

6. TECHNICAL MANUAL NUMBER PG 17-29
TM5-4220-202-14 JUNE 72

7. NAME OF ITEM REQUESTED
PUMP, JET

8. DESCRIPTION OF ITEM REQUESTED
AIR DRIVEN PUMP FOR INFLATING
25-MAN LIFE RAFT.

8a. COLOR

8b. SIZE

9. END ITEM APPLICATION

9a. SOURCE OF SUPPLY

9b. MAKE

9c. MODEL NUMBER

9d. SERIES

9e. SERIAL NUMBER

10. REQUISITIONER (Clear text name and address)

11. REMARKS
SAMPLE

FOLD HERE

FOLD HERE

DD Form 1348-6, FEB 85 *Edition of Apr 77 may be used until exhausted.*

*U.S. GPO: 1985-485-306

DOD SINGLE LINE ITEM REQUISITION SYSTEM DOCUMENT *(MANUAL - LONG FORM)*

Figure 6-9. Sample DD Form 1348-6 as a Request for Issue on NSN, Not on AMDF, Items

MILITARY INTERDEPARTMENTAL PURCHASE REQUEST

1. PAGE 1 OF 1 PAGES

2. TYPE: 4220
3. CONTROL SYMBOL NO.: W80PP5X0007105
4. DATE PREPARED: 1 SEP 84
5. MIPR NUMBER: SF-B-82-0002
6. AMEND NO.: ORIG

7. TO: DIRECTOR, MATERIAL MGT.
KELLY AIR FORCE BASE
ATTN: 6A-ALC/NMMSC

8. FROM: Property Control Branch
Supply/Services Division
DIO
FT EUSTIS, VA 23604-1234

9. ITEMS [X] ARE [ ] ARE NOT INCLUDED IN THE INTERSERVICE SUPPLY SUPPORT PROGRAM AND REQUIRED INTERSERVICE SCREENING [X] HAS [ ] HAS NOT BEEN ACCOMPLISHED.

ITEM NO.	DESCRIPTION (Federal stock number, nomenclature, specification and/or drawing No., etc.)	QTY	UNIT	ESTIMATED UNIT PRICE	ESTIMATED TOTAL PRICE
1	NSN: 4220-01-056-8667 LS NOMEN: LIFE RAFT 1 MAN REF: Rqn WX3RBQ-1328-0503 Priority 03 SAMPLE SHIP TO: Property Control Branch Supply Services Div Ft. Eustis, VA 23604-1234 Auto: 927-1234	15	EA	323.10	$4,846.50

10. SEE ATTACHED PAGES FOR DELIVERY SCHEDULES, PRESERVATION AND PACKAGING INSTRUCTIONS, SHIPPING INSTRUCTIONS AND INSTRUCTIONS FOR DISTRIBUTION OF CONTRACTS AND RELATED DOCUMENTS.

11. GRAND TOTAL $4,846.50

12. TRANSPORTATION ALLOTMENT (Based if FOB Consignor's plant)

13. MAIL INVOICES TO (Payment will be made by)
CDR, DIO
ABBA-DDD 23604-1234
FT EUSTIS, VA
DAY OFFICE SYMBOL WX3TQ1B

14. FUNDS FOR PROCUREMENT ARE PROPERLY CHARGEABLE TO THE ALLOTMENTS SET FORTH BELOW, THE AVAILABLE BALANCES OF WHICH ARE SUFFICIENT TO COVER THE ESTIMATED TOTAL PRICE.

ACTION	APPROPRIATION	SUBHEAD	SUPPLEMENTAL ACCOUNTING CLASSIFICATION	DEBIT VAL SYMBOL	AMOUNT
	21X4991	0482	84	5A4619 US	$4,846.50

15. AUTHORIZING OFFICER (Type name and title) A. Smith Acct. Off A-555
16. SIGNATURE A. Smith
17. DATE 1 Sep 84

DD FORM 448 PREVIOUS EDITION IS OBSOLETE.

Figure 6-10. Sample DD Form 448

DOCUMENTATION

6-5. All requests for equipment should be documented. ALSE personnel should use DA Form 2064 (Document Register for Supply Actions) (Figure 6-11) as an unofficial record of request. Supply can provide document numbers, due-in status, and supply status.

6-6. All turn-ins from the ALSE shop should be documented. When supply forms are used, retain a file copy. If supply forms are not used, maintain a turn-in log with appropriate information.

UNOFFICIAL RECORD

DOCUMENT REGISTER FOR SUPPLY ACTIONS
For use of this form, see DA PAM 710-2-1
The proponent agency is ODCSLOG

416TH MAINT CO (DS)								WK4ABL		WA2ZAA			20
DOCUMENT NUMBER DATE a	DOCUMENT NUMBER SERIAL b	DOCUMENT SENT TO c	STOCK NUMBER d	NOUN e	REQUEST FOR f	PD g	INITIALS h	QUANTITY REQUEST i	QUANTITY REC OR FILLED IN j	QUANTITY DUE IN k	DATE FOLLOW UP DUE l	DATE COMPLETED m	REMARKS n
2253	6028	LEA	2520001163109	CLUTCH DRV		02		1	1			2256	308/02279
2253	6029	LEA	5340001781377	INSUL. BUMPER		02		1	1			2256	402279
2254	1001	LEA	3110001931502	BEARING BALL		12		1	1			2260	403312
2254	1002	LEA	2920001016875	SOLENOID		12		2	1	1			403312
2254	1003	LEA	2520001267611	CLUTCH, FRIC		13		1					
2256	1001	LEA	3110001981502	BEARING					10				

SAMPLE

DA FORM 2064 EDITION OF SEP 68 IS OBSOLETE.

Figure 6-11. Sample DA Form 2064

> **Note:** DA Pam 710-2-1 and DA Pam 710-2-2 provide manual procedures. Units operating under, or supported by, an approved automated supply system will use the appropriate automated procedural publication for the system.

STANDARD FORM 364 (REPORT OF DISCREPANCY [ROD])

6-7. ALSE personnel should ensure that SF 364 is completed when supplies are received damaged because of shipment or packing. AR 735-11-2 covers the preparation, use, and disposition of SF 364.

PRESCRIBED LOAD LIST

6-8. The PLL is a list of repair parts required to be on hand (or on order) at all times for the performance of unit maintenance on assigned equipment. Commanders should incorporate ALSE repair parts on the unit PLL.

Note: There is no official PLL for ALSE repair parts.

AUTHORIZED PRESCRIBED LOAD LIST STOCK

6-9. DA Pam 710-2-1 gives a detailed list of items that may be placed on a unit PLL and provides stock qualification guidance. ALSE personnel are normally concerned with demand-supported items.

PRESCRIBED LOAD LIST STORAGE

6-10. ALSE PLL should be maintained in the ALSE shop because of storage requirements. The ALSE technician must inform the technical supply clerk of parts used so that supply records can be updated and requisitions can be submitted as required.

DA FORM 2063-R (PRESCRIBED LOAD LIST)

6-11. An ALSE shop establishing a PLL must prepare a separate DA Form 2063-R (Figure 6-12) for each type of life support equipment on hand in the unit for which repair parts are to be stocked. The repair parts from these lists are then combined on another DA Form 2063-R (Figure 6-13). DA Pam 710-2-1 outlines the preparation, processing, and updating procedures for DA Form 2063-R.

Note: Coordination with technical supply personnel is required.

EXPENDABLE SUPPLIES AND REPAIR PARTS

6-12. Commanders may authorize an ALSE shop a limited amount of expendable supplies and repair parts required for efficient shop operations. Such supplies should be used only for internal shop support. Two types of maintenance-related supplies are authorized for shop stock: *bench stock* and *shop stock* (demand-supported stock). Bench stock and shop stock procedures may be used by support-level ALSE maintenance activities or consolidated ALSE shops. To determine other unit authorizations refer to AR 710-2.

BENCH STOCK

6-13. Bench stocks are low-cost consumable items that the ALSE technician uses at an unpredictable rate. This stock includes items such as common hardware, thread, webbing, adhesives, and patching material. These items should be in the ALSE shop to give the technician direct access to the supplies.

6-14. The shop supervisor or technician will select this stockage based on mission needs. DA Pam 710-2-2 contains the proper procedures for determining and maintaining bench stock levels, resupply, and required records.

SHOP STOCK

6-15. Shop stocks are items selected for stockage based on three demands in a control period. This stock could include such items as flotation cells, actuators, visors, microphone booms, and casualty blankets. These items should be stored in the ALSE shop to give the technician direct access to the supplies.

6-16. DA Pam 710-2-2 contains the proper procedures for determining and maintaining shop stock levels, control periods, required records, reviews, and inventories. ALSE personnel need to coordinate with their unit/technical supply personnel in establishing and maintaining ALSE stockage.

PRESCRIBED LOAD LIST

For use of this form, see DA PAM 710-2-1. The proponent agency is ODCSLOG

1 DATE: 28 MAR 89

2 UNIT ORGANIZATION: 163 AVN CO, FT CAMPBELL, KY

3 UNIT IDENTIFICATION CODE: W48ATC

4 ITEM OF EQUIPMENT: LIFE PRESERVER, LPU-10/P

5 PUBLICATION DATA:

STOCK NUMBER	ITEM DESCRIPTION	UNIT OF ISSUE	AUTHORIZED QUANTITY BASIC	AUTHORIZED QUANTITY OPERATIONAL	REMARKS
4220-00-062-6202	CONTAINER CELL, LH	EA			
4220-00-062-6206	CONTAINER CELL, RH	EA			
4220-00-645-6989	CELL FLOTATION, R	EA			
4220-00-645-6995	CELL FLOTATION, L	EA			
4220-00-255-7945	VALVE, PNEUMATIC	EA			
5330-00-018-0793	GASKET UP	EA			
5330-00-018-0790	GASKET L	EA			
4220-01-077-8773	CYLINDER TYPE II	EA			
4220-00-725-8517	CLIP, BREATHER	EA			
5355-00-668-6005	KNOB	EA			
4220-00-561-0094	VALVE PNEUMATIC	EA			
8315-00-132-5007	STRIP COATED	RL			

SAMPLE

DA FORM 2063-R, JAN 82 — EDITION OF APR 68 IS OBSOLETE — NOTE: Blocks 4 and 5 will not be used on Consolidated Prescribed Load List

Figure 6-12. Sample DA Form 2063-R

PRESCRIBED LOAD LIST

For use of this form, see DA PAM 710-2-1. The proponent agency is ODCSLOG

DATE: 28 MAR 89

2 UNIT ORGANIZATION: 163 AVN CO FT CAMPBELL KY

3 UNIT IDENTIFICATION CODE: W48ATC

4 ITEM OF EQUIPMENT:

5 PUBLICATION DATA:

STOCK NUMBER	ITEM DESCRIPTION	UNIT OF ISSUE	AUTHORIZED QUANTITY BASIC	AUTHORIZED QUANTITY OPERATIONAL	REMARKS
8815-00-132-5007	STRIP CORTED		1		
5355-00-668-6005	KNOB	EA	2		
4220-01-077-8773	CYLINDER	EA	1		
4220-00-255-7949	VALVE, PNEUMATIC	EA	2		

Figure 6-13. Consolidated Prescribed Load List

Chapter 7

Aviation Life Support Equipment

Survival Training Program

ALSE personnel must be familiar with the appropriate publications for the equipment they maintain. These publications provide detailed information on the description and application of ALSE. They tell how to inspect, test, maintain, repair, disassemble, assemble, fit, don, pack, and store the equipment and components. Forms and records play a large role in any maintenance program; therefore, ALSE personnel must be familiar with appropriate equipment records. (See Chapter 5.) ALSE personnel must be familiar with AR 95-1, DA Pam 385-40, and the ALSE Retrieval Program. These publications provide guidance on the Army Aviation Life Support System Program. They cover responsibilities, equipment authorizations and requirements, personnel and training requirements, and maintenance requirements. They provide information and associated publications on the ALSE survival training program.

SURVIVAL TRAINING REQUIREMENTS

7-1. Commanders will ensure that all aircrew personnel are adequately trained in ALSE according to AR 95-1 to include: operation, use, and operator maintenance. This task depends on the unit commander's support and policy on ALSE and survival training. It also depends on the safety officer, standardization personnel, the ALSO, technicians, and, basically, all aircrew members.

7-2. Survival training should begin with training on the basic equipment for the climatic area of the world in which your unit is located and where your unit is likely to go. Aircrew members should be properly trained on how to perform preflight inspections and on operator maintenance on all their personal ALSE. They should also be trained on how to properly and safely use all the components of survival and medical kits along with their personal ALSE. This can be accomplished in a classroom environment with the various equipment and applicable maintenance and operator manuals.

7-3. Once the basics are understood, your unit can advance to actual survival training. The information in the publications listed in this chapter will help you accomplish this task. You can begin the survival training in the classroom and then progress to more interesting, realistic training. Flotation training can be accomplished in a pool, lake, or bay; overnight survival training programs can be arranged or conducted in conjunction with field exercises. Remember that equipment used for training purposes must be marked "For Training Only"; it cannot be used as mission equipment.

SURVIVAL TRAINING COURSES

7-4. If your unit is interested in a formal survival school with college credits, the WRASS may be your answer. WRASS provides survival training for aircrew and nonaircrew personnel through a privatized school, the UTS. UTS is chartered as a nonprofit training institution. It specializes in unique training programs for the military, law enforcement agencies, and the petroleum industry. The training includes procedures and techniques in the use of ALSE and the practical techniques for on-the-ground and water survival in any environment.

7-5. For more information you may write to: Universal Training Systems, ATTN: WRASS, 15200 SW Twin Fir Road, Lake Oswego, Oregon 97035 or telephone (commercial): 503-636-6254. Whoever provides the training should develop a survival training program that will enable your unit personnel to meet any survival situations they may face. It can make the difference between life and death.

7-6. Along with this chapter, use the following publications. They have information and describe basic techniques that will enable you to cope and survive in a survival situation.

- FM 21-76.
- FM 25-100.
- AF REG 64-4.
- NAVAIR 00-80T-101.

7-7. A basic survival training program should progress throughout the unit training program. Aviators should be trained using the assigned equipment of the unit beginning with familiarization and leading into sustainment training. The following areas should be considered:

- Basic land survival.
- Hot climate survival.
- Cold climate survival.
- Overwater survival.
- Destruction of equipment to prevent enemy use.
- Combat escape and evasion techniques.
- Prisoner of war resistance.
- Unit aircrew recovery procedures and policies.

Appendix A

Sample Standing Operating Procedure for Aviation Life Support Equipment Shop

Figure A-1 is a sample format for an SOP for the ALSE shop.

1. PURPOSE

To establish responsibilities, policies, and procedures to ensure maximum reliability from all ALSE used by flight crew members assigned to (as applicable).

2. SCOPE

All personnel using aircraft at (as applicable) will adhere to the requirements established in this SOP. Applicable portions from Army, Air Force, and Navy regulations, technical manuals, technical orders, and NAVAIR regulations will be used to devise policies, procedures, and directives for flight crew members and life support personnel to follow.

3. MISSION

The mission of the life support shop is to provide an operational facility for the inspection, maintenance, cleaning, and repair or replacement of ALSE assigned to (location) and support units (if applicable).

4. DUTIES AND RESPONSIBILITIES

a. Aviation safety officers will monitor all aviation activities for commands to ensure the proper use of protective clothing and ALSE. Lack or misuse of protective clothing and ALSE constitutes grounds for an operational hazard report. OHRs will be submitted on DA Form 2696-R (Operational Hazard Report) under AR 95-1 and AR 385-95.

b. ALSOs will be appointed on orders to assist, advise, and represent commanders in all matters pertaining to the aviation life support shop. ALSOs will—

(1) Review, analyze, and develop procedures for planning, budgeting, and maintaining an ALSS.

(2) Ensure that aircrew personnel are trained in the proper operation, use, and maintenance of survival equipment and the techniques of survival.

Figure A-1. Sample Format for an SOP for the ALSE Shop

(3) Supervise the life support section and ensure that qualified personnel are available for conducting life support and survival training and maintaining organizational-level ALSE.

(4) Keep a current file of regulations, procedures, and TMs pertaining to inspection, maintenance, and use of assigned life support equipment.

(5) Ensure that units have adequate information and training before using new equipment or system changes.

(6) Ensure that units encourage life support suggestions and OHRs.

(7) Ensure that materiel deficiency reports are submitted on life support equipment failing to operate as designed.

(8) Participate as an ALSE member on the unit Aviation Safety Council.

(9) Assist higher headquarters in standardizing the ALSS program.

c. Aviation life support equipment technicians will be appointed to assist, advise, and represent the ALSO in all matters pertaining to ALSE. Specifically, they will—

(1) Establish a library of ALSE publications, and ensure that the unit's pinpoint distribution account is updated to include ALSE publications and necessary forms.

(2) Ensure that all ALSE is maintained in a high state of readiness through inspecting, cleaning, fitting, testing, adjusting, and repairing.

(3) Maintain files on inspection, maintenance, expiration dates, and supply pertaining to ALSE.

(4) Participate as enlisted representatives at aviation safety meetings and conferences.

(5) Participate in local ALSE steering council meetings.

(6) Inspect all controlled drugs used in survival kits and vests.

d. Pilots in command will ensure that ALSE commensurate with the mission and the operational environment is available on the aircraft and that aircrew members and passengers are briefed on its location and use.

5. SHOP OPERATIONS

a. A life support locker (if applicable) is located in the life support shop and maintained by the life support technician. All inspecting, testing, cleaning, and repairing of ALSE will be done in this shop.

Figure A-1. Sample Format for an SOP for the ALSE Shop (Continued)

b. Only the minimum number of each item of life support equipment necessary to support operational requirements will be kept in the life support locker. All other items will be stored in the ALSE shop.

c. All items of equipment, except earplugs, will be issued on a short-term basis to authorized personnel only and must be returned immediately upon completion of the flight.

(1) Supported unit will consolidate all survival radios at the (location). Radios will then be issued using (local form, if used) (see Figure 1).

(2) All remaining equipment will be issued using (equipment sign-out card/sheets) (may be locally designed).

(3) Personnel who want to keep equipment for a longer time; for example, during AT or on a long-range flight, will be issued that equipment using DA Form 3161 or DD Form 1150 (Request for Issue or Turn-In) as a temporary hand receipt.

(4) Personnel requiring the use of equipment when the operations center is closed will make arrangements beforehand with the life support technician for the issuing of that equipment.

d. Only the life support technician is authorized to issue and receive equipment kept in the life support locker.

(1) All life support items will be inspected or tested at required intervals according to appropriate Army technical manuals, Air Force technical orders, and Navy NAVAIR publications.

(a) **Survival Radios.** AN/PRC-90 radios will be tested monthly and after each period of operational use, using the AN/PRM-32 test set, according to TM 11-5820-800-13&P. Test results will be recorded on DA Form 2408-23 (Survival Radio/Emergency Location Transmitter Inspection Record). Batteries for the AN/PRC-90 radios will be tested IAW applicable manuals, using the TS-1230/UR (with adapter MX-8801/PRC-90) or TS-2530A/UR test sets, according to applicable manuals. AN/PRC-90-2 will be tested with the TS-24(B), according to TO 31R2-2PRC90-1, TO 31R2-2PRC90-2, and TO 33D7-71-42-1.

(b) **Life Preservers.** These will be subjected to periodic and functional inspections every 120 days per applicable manuals. Inspections will be annotated on DA Form 2408-26 (Life Preserver Inspection Record) and DA Form 2408-27 (Life Preserver Data). DA Form 2408-27 will accompany the individual life preserver unit at all times.

(c) **Survival Kits.** Over water survival kits will be inspected before issue and every 120 days per applicable manuals. Inspection results will be recorded on DA Form 2408-24 (Survival Kit Inspection and Maintenance Record). In addition, the LR-1 life raft will be functionally inspected as indicated and results will be recorded on DA Form 2408-21 (Life Raft Inspection Record). Hot climate and cold climate survival kits will also be inspected before issue and every 120 days according to applicable manuals. Inspection results will be recorded on DA Form 2408-24.

Figure A-1. Sample Format for an SOP for the ALSE Shop (Continued)

TYPE EQUIP	SERIAL NO	QTY	DATE OUT	PRINTED NAME	SIGNATURE	DATE IN	RCVD BY
PRC-90	56789	1	3 Jan 89	Doe, John	John Doe	3 Jan 89	RGJ

SAMPLE

Figure 1. Sample Equipment Sign-Out Sheet (Local Form)

(d) **Survival Vests**. Vests will be inspected before issue and every 120 days according to applicable manuals. Results will be recorded on DA Form 2408-25 (Mesh Net Survival Vest Inspection Record).

(e) **Flight Helmets**. Helmets will be inspected every 120 days according applicable manuals. Inspection results will be recorded on DA Form 2408-22 (Helmet and Oxygen Mask/Connector Inspection Record).

(2) Any ALSE items failing to pass required inspections or tests will be immediately tagged with the appropriate DD Form 1577 (Unserviceable [Condemned] Tag - Materiel) or 1577-2 (Unserviceable [Repairable] Tag - Materiel). Those items which can be repaired locally will be stored separately from serviceable items until repairs can be made. All other items will be processed for repair, turn-in, or replacement through appropriate maintenance or supply channels.

Figure A-1. Sample Format for an SOP for the ALSE Shop (Continued)

e. ALSE will be cleaned or repaired according to the strict guidelines and limitations in the appropriate Army technical manual, Air Force technical order, or NAVAIR publication.

Note: Testing and servicing the circuitry of the AN/PRC-90 radio are not authorized. Defective radios must be submitted for repair to Transportation Officer, Sacramento Army Depot, Sacramento, CA 94801.

f. All ALSE not necessary to support immediate operational requirements will be stored in the life support shop.

(1) ALSE will be stored according to instructions in the appropriate Army technical manual, Air Force technical order, or NAVAIR publication.

(2) All serviceable items stored in the shop will be tagged with DD Form 1574 (Serviceable Tag - Materiel).

g. All files and records pertaining to life support, the life support library, and all spare parts for ALSE will be maintained in the life support shop.

(1) All files and records pertaining to ALSE will be maintained according to AR 25-400-2.

(2) A complete and current library of all publications pertaining to life support will be maintained.

(3) Those spare parts necessary for repair of ALSE will be kept in stock as appropriate according to supply regulations.

h. All aviation personnel will use the crew lockers in the life support shop (specify location) for storing their ALSE. Storing them in the shop will make all items readily available to the life support technician for inspection/repair. As a minimum, crew members are required to keep the following items of equipment in their assigned locker at all times except when flying:

(1) SPH-4 helmet (or appropriate helmet).

(2) Survival vest (with all components and radio).

(3) Life preserver (if applicable).

(4) Any other ALSE requiring scheduled inspections or testing according to applicable Army technical manuals, Air Force technical orders, and NAVAIR publications.

(5) Any other life support items which the crew member wants tested, inspected, repaired, cleaned, or replaced.

Figure A-1. Sample Format for an SOP for the ALSE Shop (Continued)

6. PREFLIGHT PROCEDURES

Crew members should use the following ALSE inspection procedures before each flight. Where possible, procedures have been reprinted or condensed from the appropriate Army technical manual and/or Air Force technical order pertaining to that piece of equipment.

a. **AN/PRC-90 Survival Radios.**

(1) **Exposed metal surfaces.** Inspect metal surfaces for signs of rust and corrosion.

(2) **Backplate pressure equalization vent.** Inspect vent for damage.

(3) **Wrist strap.** Inspect strap for mildew, fungus, dry rot, or insect damage.

(4) **Battery cap and retainer.** Check for proper removal and re-assembly, broken retainer, and internal corrosion.

(5) **Antenna.** Check condition for corrosion, cross threading, or bent connector parts. Check for antenna cover material breakdown.

Note: Also ensure that the antenna sealing washer is present and not deteriorated.

(6) **Battery.** Remove battery and check it and both battery contacts for signs of corrosion or alkaline leakage.

(7) **Electrical headset.** (Optional check) Remove earphone from its case and check for signs of corrosion or insulation breakdown. Clean ear piece.

(8) **Headset case.** Check for loose snap or material breakdown.

(9) **Controls.** With battery removed, operate switches and check for chipped paint, faded identification symbols, or evidence of damage.

(10) **Hermetic switch seals.** Check for cracks in the modulated continuous wave [button] and push-to-talk switch covers.

(11) **Replacement.** If radio appears unsatisfactory, notify the life support technician.

b. **Life Preservers.**

Note: Do not open any sealed or safety-tied portions of preserver for preflight check.

(1) **Exposed metal parts.** Inspect for corrosion and damage.

Figure A-1. Sample Format for an SOP for the ALSE Shop (Continued)

(2) **Seams and harness.** Inspect for wear, snags, tears, and abrasion.

(3) **Container fabric.** Inspect for cuts, tears, abrasions, security of stitching, or other damage.

(4) **Safety ties.** Inspect safety ties on release pins and on lanyards on carrying case.

Note: Do not pull lanyards, as this will cause the life preserver unit to inflate.

(5) **Overall assembly.** Inspect for stains, dirt, and general cleanliness.

(6) **Replacement.** If life preserver appears unsatisfactory, notify the life support technician.

c. **OV-1 Rigid Seat Survival Kits.**

(1) **Overwater, Hot Climate, and Cold Climate Survival Kits.**

Note: Do not open the survival kit containers for preflight check.

(a) **Exposed metal parts.** Inspect for corrosion and damage.

(b) **Seams.** Inspect for wear, snags, tears, and abrasion.

(c) **Container fabric.** Inspect for cuts, tears, abrasions, security of stitching, or other damage.

(d) **Slide fasteners.** Inspect for damage and ensure that fasteners are securely closed so that kit cannot inadvertently open.

(e) **Overall assembly.** Inspect for stains, dirt, and general cleanliness.

(f) **Replacement.** If survival kit appears unsatisfactory, notify the life support technician.

(2) **OV-1 Aircraft Survival Vest.**

(a) **Vest fabric**. Inspect the fabric, including the pockets, for cuts, tears, seam separation, loose stitching, and snaps.

(b) **Snap fasteners and slide fasteners.** Inspect for proper operation.

(c) **Components.** Inspect to ensure that all mandatory components are installed.

(d) **Replacements.** If survival vest appears unsatisfactory, notify the life support technician.

Figure A-1. Sample Format for an SOP for the ALSE Shop (Continued)

d. **SPH-4 Helmet.**

(1) **Visor and housing.** Lower and raise visor to ensure it moves freely in its tracks. Inspect visor lock to ensure it locks visor in the retracted position. Inspect visor for dust, grease, and other defects.

(2) **Chin strap.** Inspect for defects and cleanliness.

(3) **Retention assembly.** Inspect for defects and cleanliness.

(4) **Ear cup tension, cross straps, and space pads.** Inspect for defects and cleanliness.

(5) **Headband and suspension assembly.** Inspect for defects and cleanliness.

(6) **Ear cups and wiring harness.** Inspect for obvious damage.

(7) **Microphone, boom, and cord.** Inspect for obvious damage.

(8) **Beading.** Inspect for damage.

(9) **Thermal plastic liner.** Inspect for defects, velcro tab security, and cleanliness.

(10**)** **Screws.** Inspect for tightness and proper length. Screw tips cannot extend beyond screw post inside the helmet.

(11) **Liner.** Inspect for defects.

(12**)** **Shell.** Inspect for cracks, missing parts, dirt, damaged paint, or markings.

(13**)** **Replacement.** If helmet appears unsatisfactory, notify the life support technician.

Important: If any item of ALSE appears unsatisfactory, DO NOT USE IT. Screws protruding inside the helmet could be fatal on impact in the event of an accident. Any dirty, bacterial laden fabric next to the skin constitutes a health hazard.

Figure A-1. Sample Format for an SOP for the ALSE Shop (Concluded)

Appendix B

Shop Illustrations and Suggestions

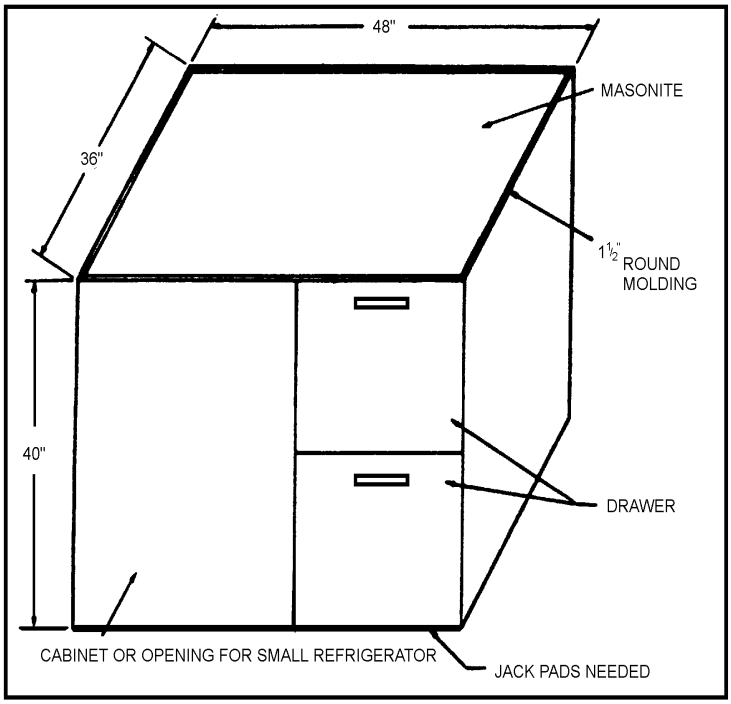

Figure B-1. Scale Table

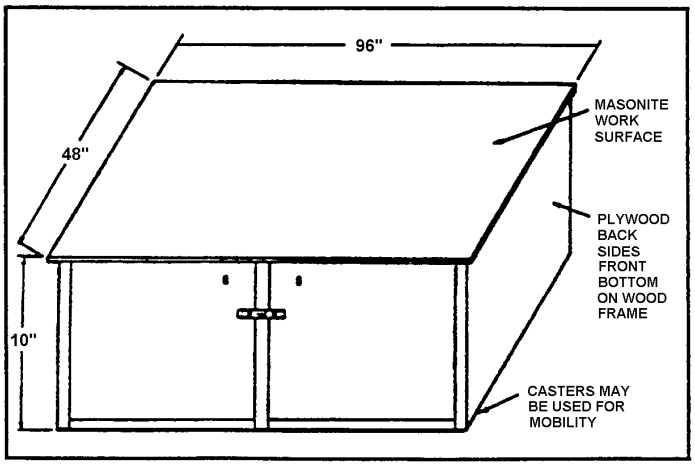

Figure B-2. Large Workbench with Storage

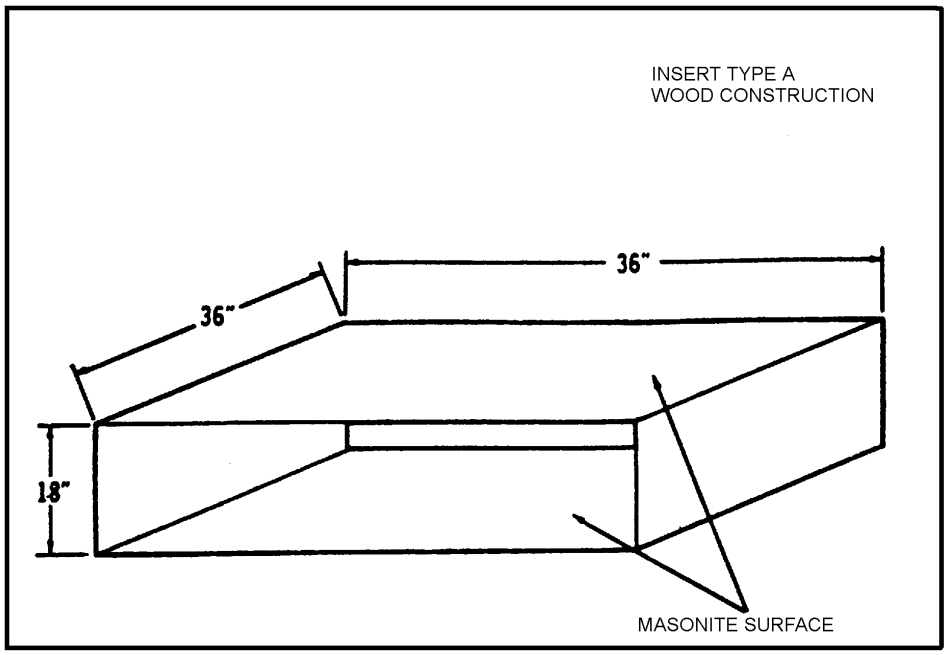

Figure B-3. Shelf Insert for Workbench

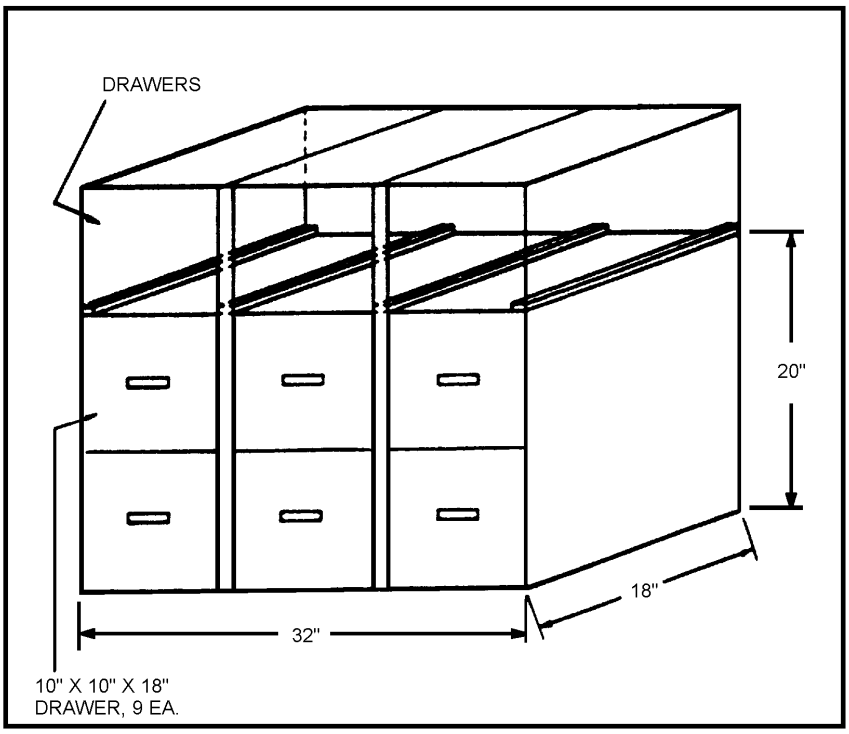

Figure B-4. Drawer Insert for Workbench

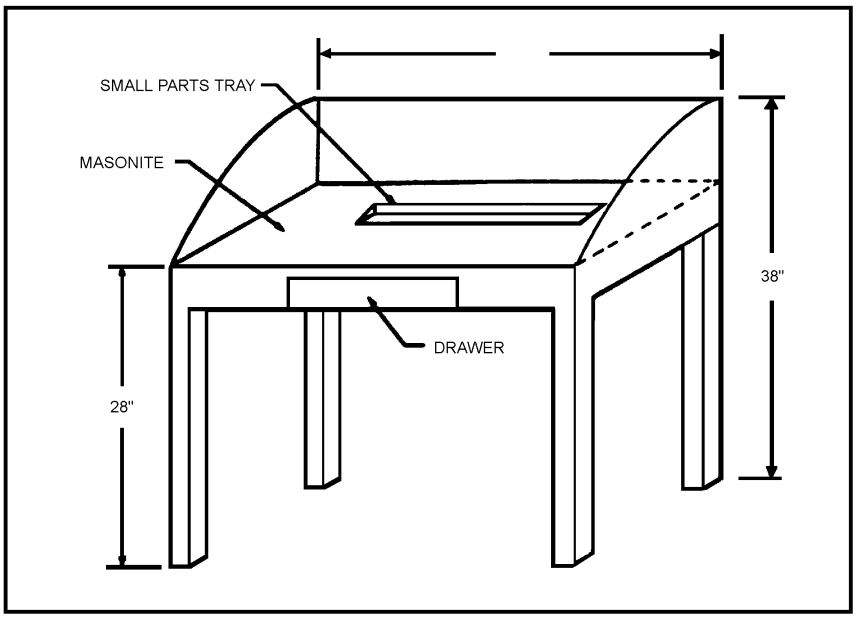

Figure B-5. One-Person Work Station

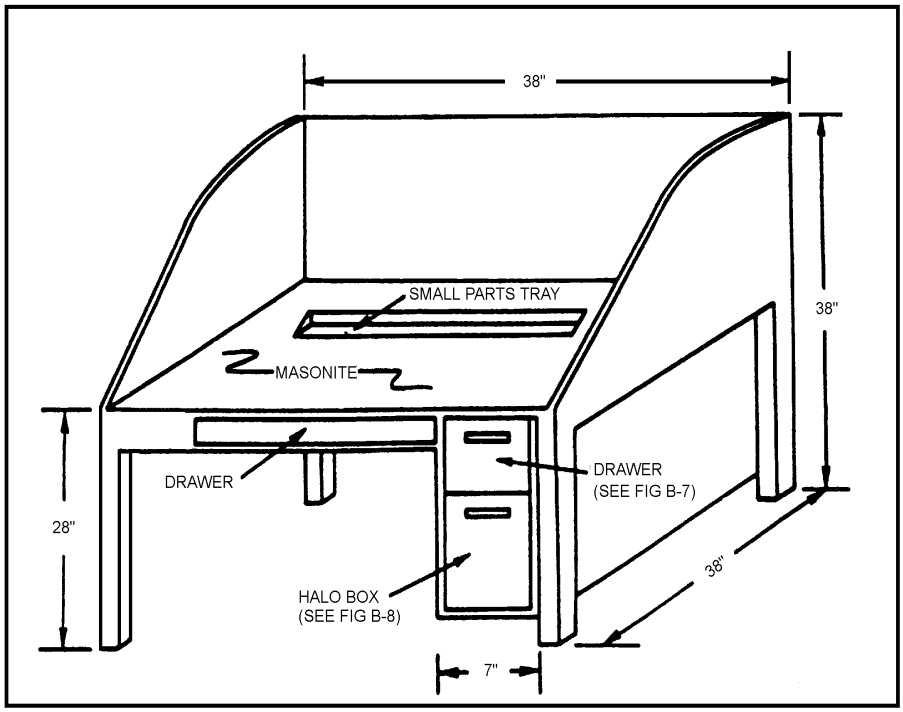

Figure B-6. One-Person Work Station with Storage Drawers

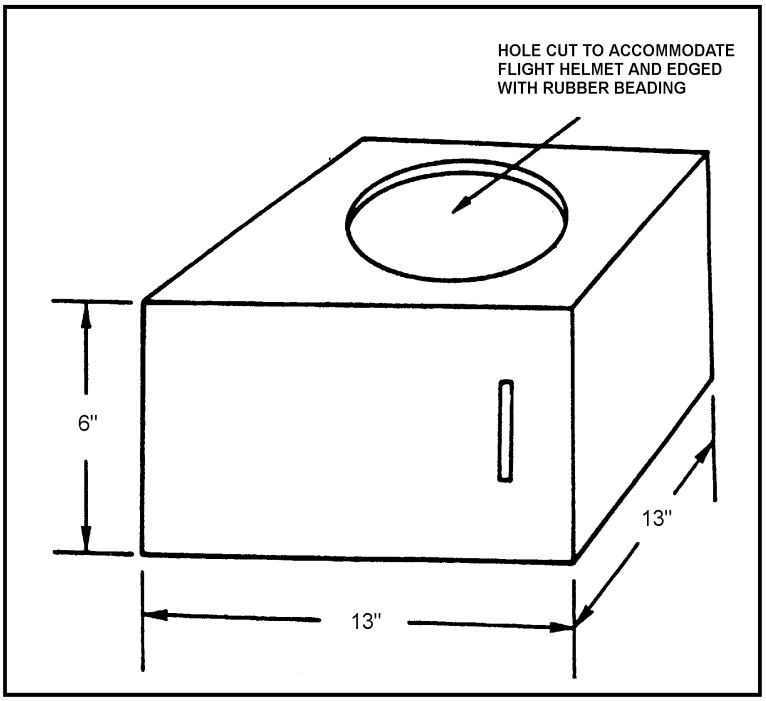

Figure B-7. Halo Box (Helmet Rebuild Station)

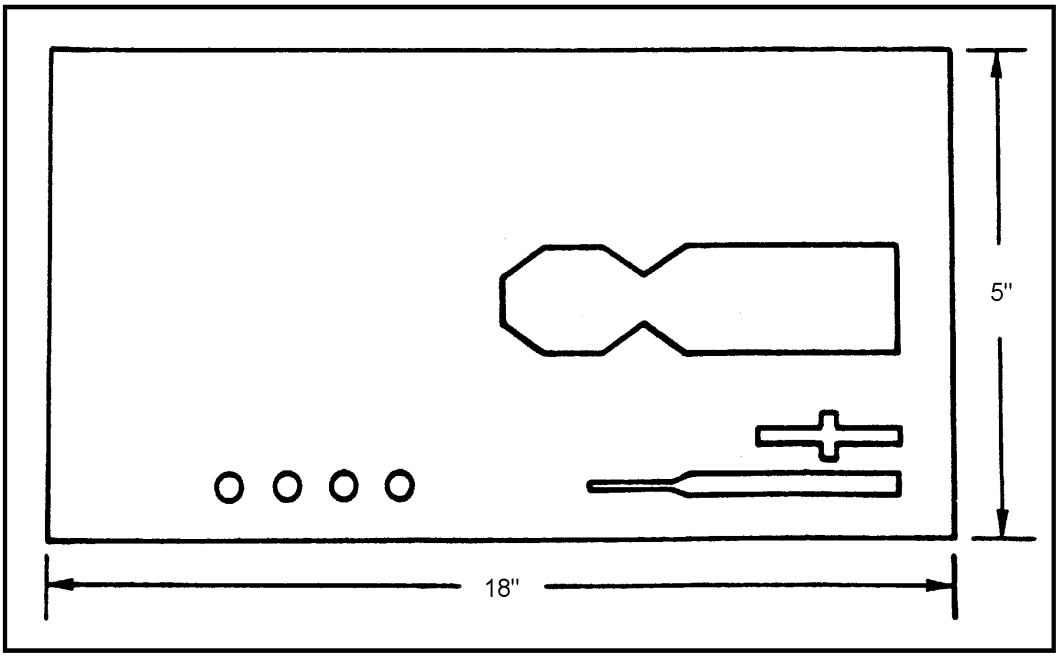

Figure B-8. Insert for Drawer (Oxygen Mask Tools)

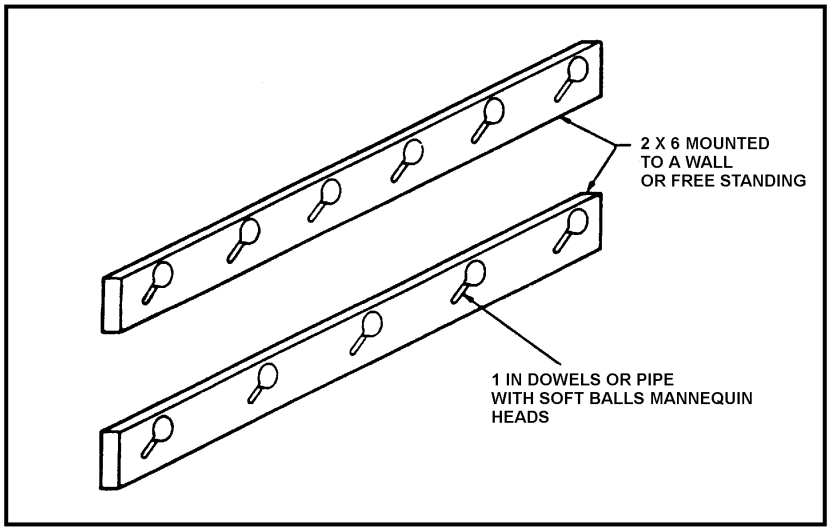

Figure B-9. Helmet Rack (with Dowels)

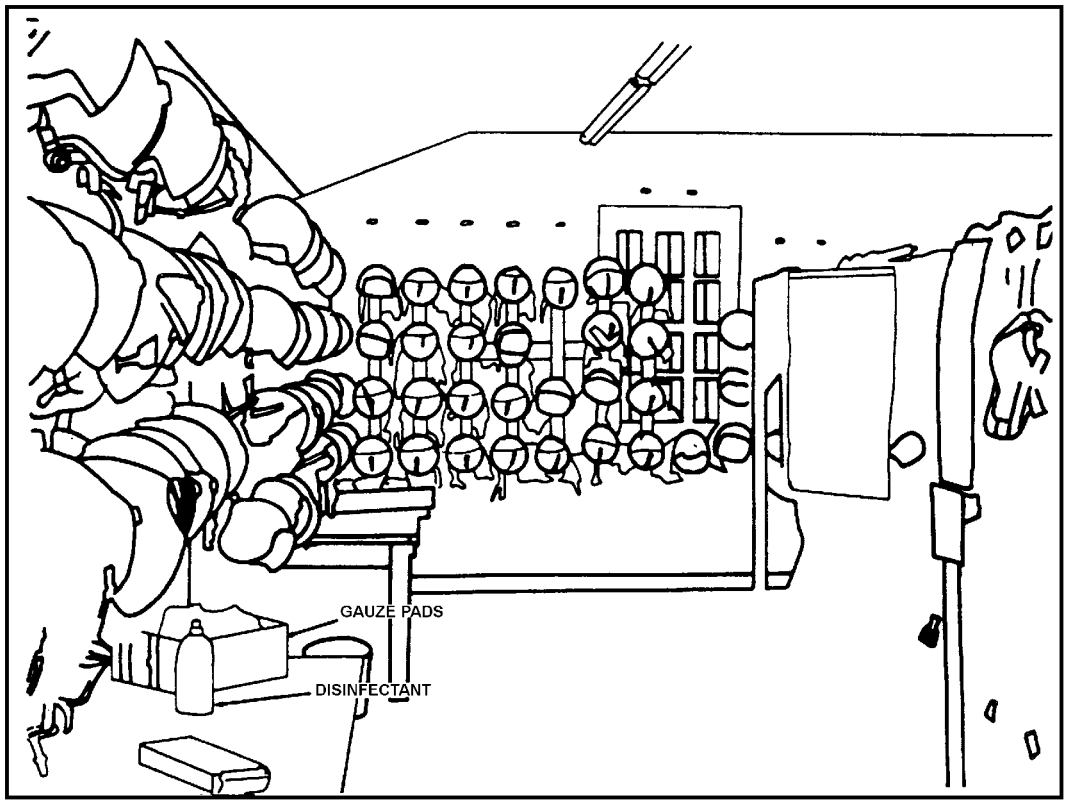

Figure B-10. Helmet Storage (Rack-Type)

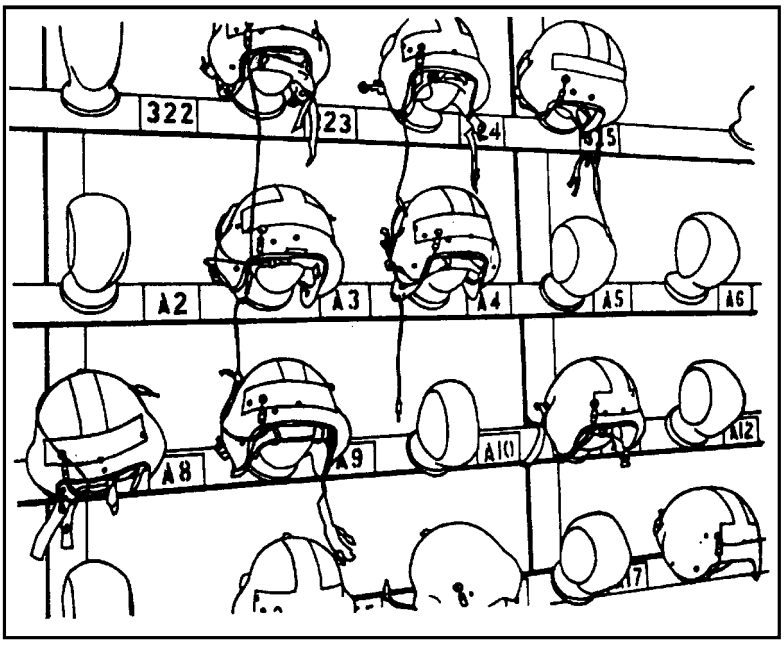

Figure B-11. Helmet Rack (With Mannequins)

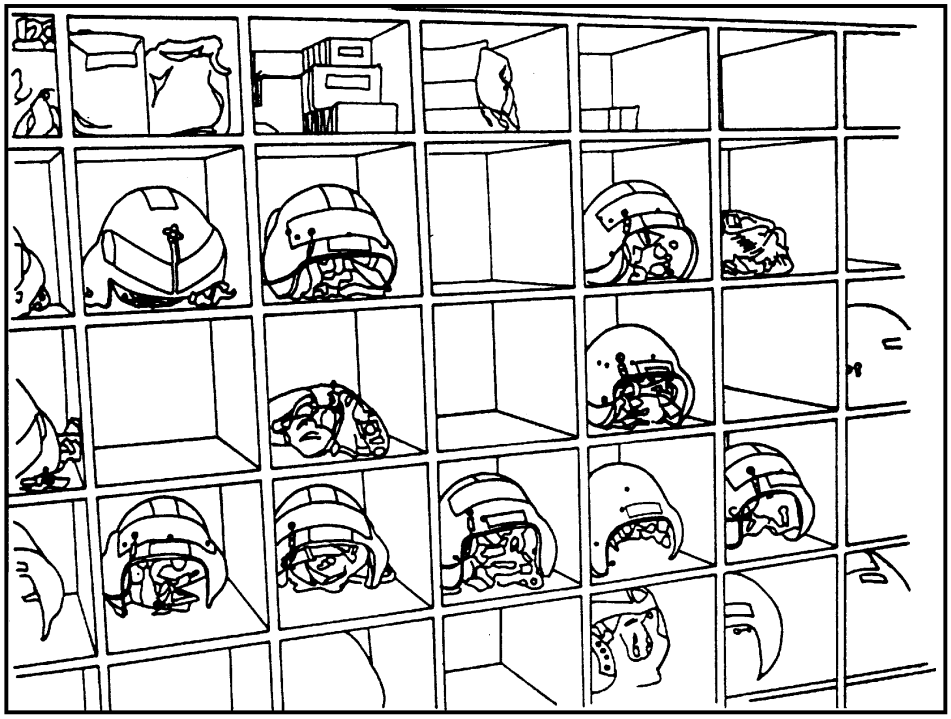

Figure B-12. Helmet Storage (Cabinet-Type)

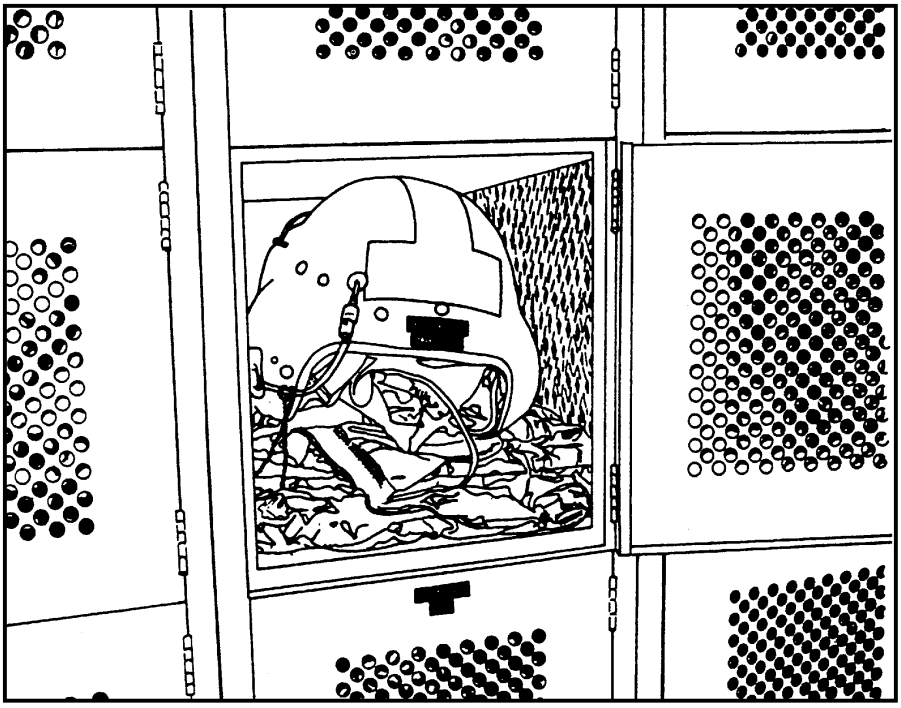

Figure B-13. ALSE Locker (Vest and Helmet)

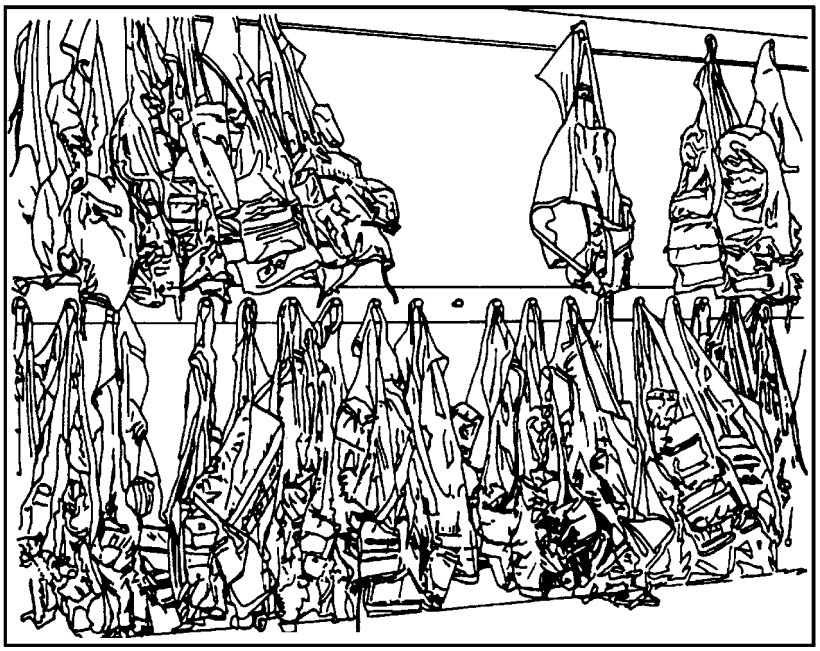

Figure B-14. Vest Storage (Use wood dowels, double, if possible.)

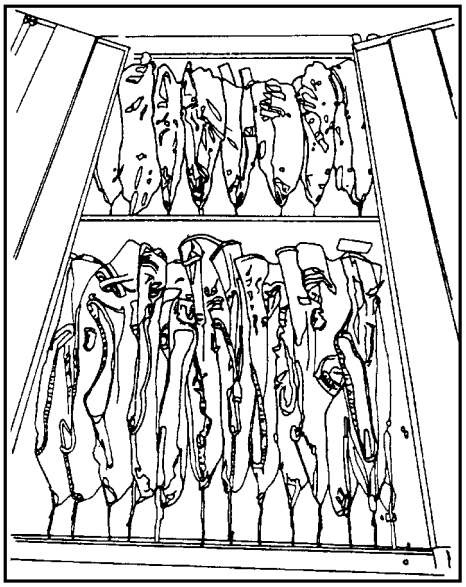

Figure B-15. Vest Storage, Wall Locker (Use wood or plastic hangers, if possible.)

Note: Wall lockers should have ventilation capability/openings on the doors, if locked.

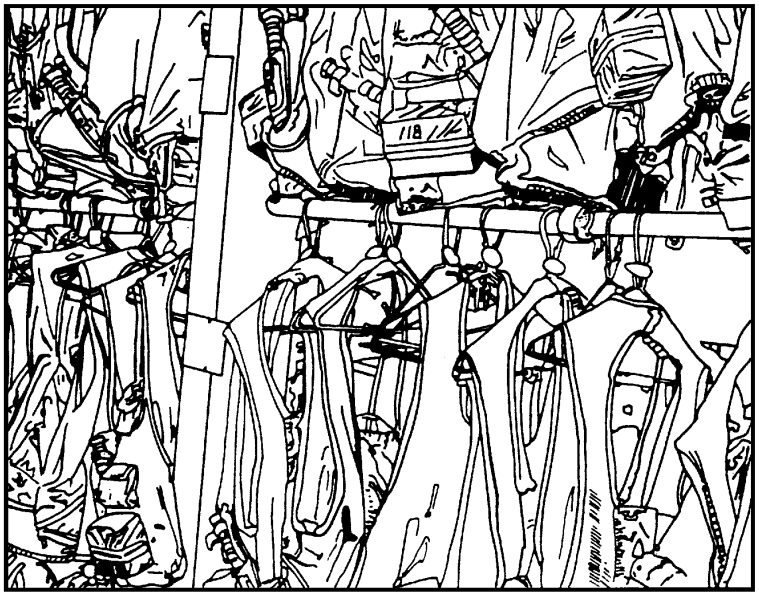

Figure B-16. Vest Storage, Hangers (Use wood or plastic, if possible.)

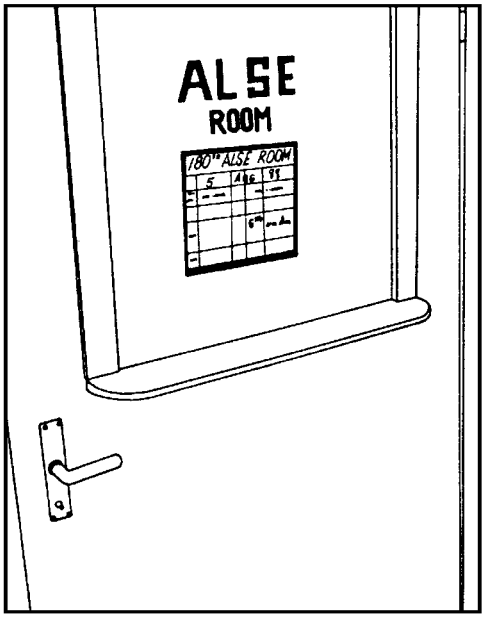

Figure B-17. Controlled Entry (Window in door)

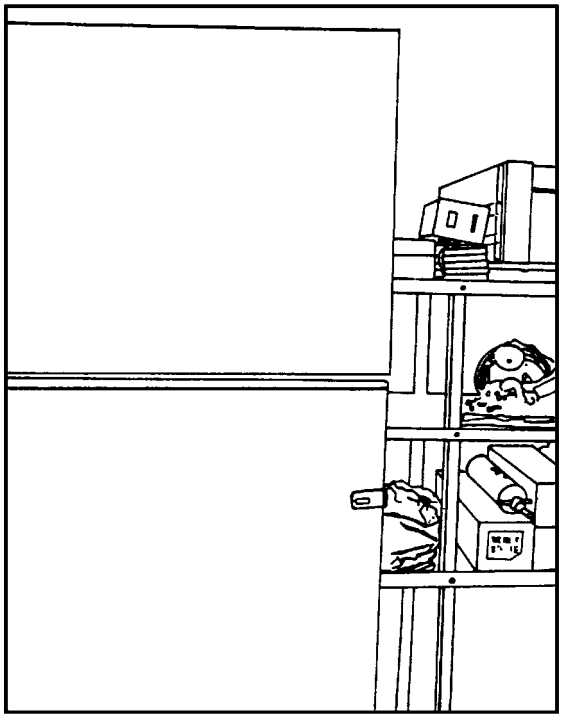

Figure B-18. Controlled Entry (French Door)

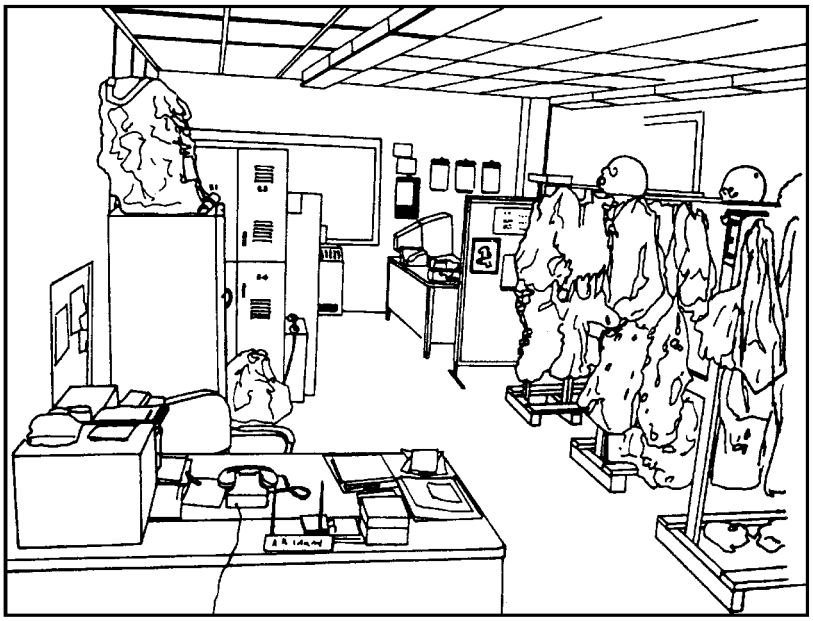

Figure B-19. Controlled Entry (Counter and Desk at Front)

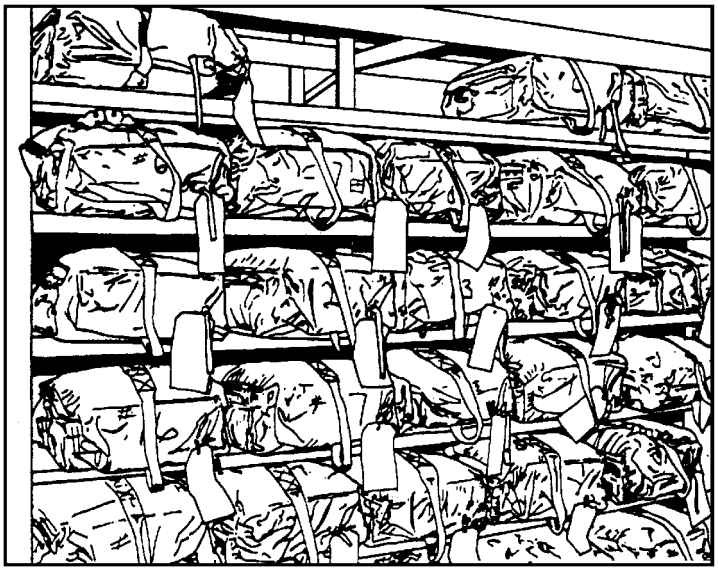

Figure B-20. Survival Kit Storage (Wood Shelves)

Note: Rubber matting or tile should be placed on wood surfaces to prevent splinters and on metal surfaces to prevent metal-to-metal contact.

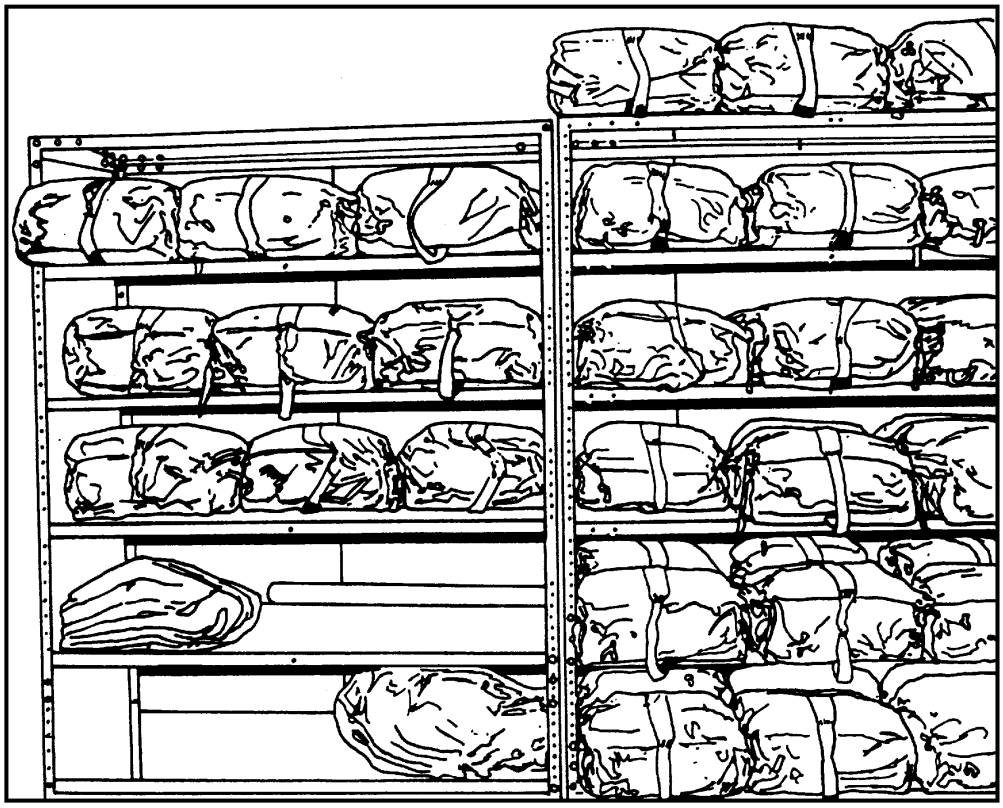

Figure B-21. Survival Kit Storage (Lockers)

SUGGESTION A

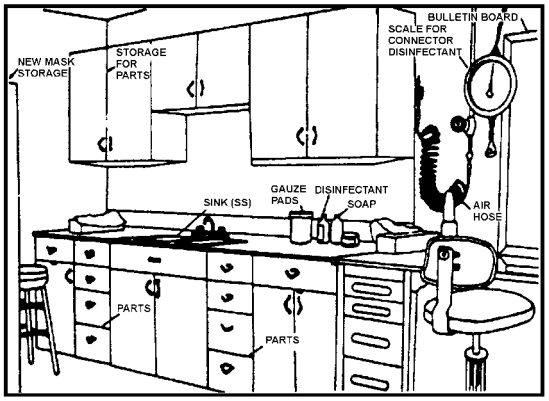

SUGGESTION B

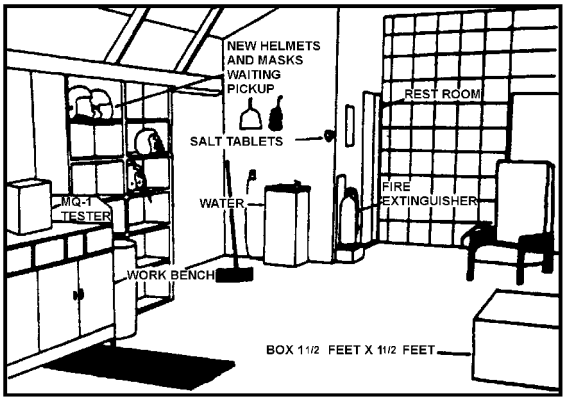

Figure B-22. Aircrew Life Support Shop

RECOMMENDED BUILDING MATERIALS FOR FIGURES B-1 THROUGH B-10

B-1. Materials may be substituted as deemed necessary by the local unit as long as the strength of the completed project has not been compromised. No information is available at this time for the building materials needed for those items to be constructed in Figures B-11 through B-22.

- **Scale Table (Figure B-1).**
  - 3/4-inch plywood
  - 1/4-inch Masonite (top of work table)
  - 1-inch molding, half-round
  - Drawer glides
  - Drawer pulls (handles)
  - 2- by 2-inch stock (framing)
  - Jack pads (for feet)
  - Glue
  - Nails
  - Screws
  - Paint
- **Workbench (Flotation Gear) (Figure B-2).**
  - 3/4-inch plywood
  - 1/4-inch Masonite (top of workbench)
  - Hinges
  - Drawer pulls (handles)
  - Hasps with padlocks
  - 2- by 4-inch stock (framing)
  - Casters (optional)
  - Glue
  - Nails
  - Screws
  - Paint
- **Shelf Insert (Workbench-Flotation Gear) (Figure B-3).**
  - 3/4-inch plywood
  - 1/4-inch Masonite
  - Glue
  - Nails
- **Drawer Insert (Flotation Gear)(Figure B-4).** This drawer insert can also be used in the standard wall locker for additional storage space.

- 3/4-inch plywood
- 1-by-inch stock
- Drawer pulls (handles)
- Glue
- Nails

- **One-Person Work Station (Figure B-5).**
  - 3/4-inch plywood
  - 1/4-inch Masonite
  - 2-by-4-inch stock (framing)
  - Drawer glides
  - Drawer pulls (handles)
  - Nails
  - Glue
  - Screws
  - Paint
- **One-Person Work Station With Storage Drawers (Figure B-6).**
  - 3/4-inch plywood
  - 1/4-inch Masonite
  - 2-by-4-inch stock (framing)
  - Drawer glides
  - Drawer pulls (handles)
  - Nails
  - Glue
  - Screws
  - Paint
- **Halo Box (Helmet Rebuild Station) (Figure B-7).**
  - 2-by-4-inch stock
  - Glue
  - Nails
  - Rubber beading
  - Black paint (optional)
- **Insert For Drawer (Oxygen Mask Tools) (Figure B-8).**
  - 3/4-inch plywood
  - Black paint (optional)
- **Helmet Rack (Figure B-9)**
  - 2-by 6-inch planking
  - 1-inch dowel or 1-inch pipe

- Mannequin heads or soft balls
- Screws or nails
- Glue
- Paint

- **Aircrew Helmet Storage (Figure B-10).**
  - 2-by 6-inch planking
  - 1-inch dowels
  - Soft balls

Appendix C

Shop Equipment

At this time, the Army does not have a standardized tool kit for the ALSE technician. This shortfall has been addressed and steps are being taken to provide a kit. The following lists of tools were compiled from technical publications and TOOLS field experience.

COMMON TOOLS

C-1. This list gives your unit the *common* tools that may it may require. You may want to substitute because of personnel or unit preference.

- Parts kit, Mask
- Spatula.
- Files.
- Pocket knife.
- Exacto knife.
- Pliers, Diagonal-cutting.
- Punch, Leather.
- Heat sink (Hemostat).
- Hammer, Hand.
- Crowfoot, Attachment.
- Screwdriver, 4”, Flat-tip.
- Pliers, Slip-joint.
- Awl saddlers.
- Adapter, Socket.
- Tweezers, Craftsman.
- Adapter, Socket.
- Tweezers, Craftsman.
- Screwdriver, 4”, Phillips.
- Screwdriver, 3”, Flat-tip.
- Pliers, Long-nose, Offset.
- Wrench, Adjustable.
- Pliers, Long-nose.
- Wrench, Pliers (Vise-grip).
- Screw starter.
- Screwdriver set, Jeweler's.
- Extractor, Electron-tube.
- Mallet, Rawhide.

- Wrench, Torque, ¼-inch.
- Allen key set.
- Inspection mirror.
- Punch, Drive-pin.
- Rule, 6-inch, Machinist.
- Toolbox, Portable.
- Magnifier.
- Brush, Stencil.
- Brush, Dusting.
- Tape measure cloth.
- Combination square.
- Drill electric.

SPECIAL TOOLS

C-2. This list contains the *special* tools your unit may require. You may want to substitute because of personnel or unit preference.

- Sets and dies for snaps and grommets.
- Parts kit, Oxygen-mask repair.
- Oxygen-servicing unit.
- Sewing machine, Industrial.
- CO2 transfer unit.
- Work station, Bench, 72-inch, Steel, MOD 36, WKHGT.
- Refrigerator.
- File set, Hand.
- Knife, Craftsman.
- Punch, Leather.
- Crowfoot Attachment.
- Tweezers, Craftsman.
- Vise, Heavy-duty, Machinist, 4 ½-inch.
- Screwdriver set, Jeweler's.
- Wrench, Torque, ¼inch.
- Wrench, Torque, 3/8-inch.
- Punch, Drive-Pin.
- Toolbox, Portable OR.
- Toolbox, 7-Drawer.
- Test set AN/PRM-32A.
- Tester, Strobe-light.
- Test set, Radio, ACR/TS-24(B).
- Battery tester TS-530A/UR.

- Adapter, Battery-tester, MX-8801/PRC-90.
- Multimeter ME-26/U.
- 0-50 pound scale, Dial-indicating.
- Scale, Dial and beam.
- Tester, Oxygen-mask, MQ-1A.
- Computer with CD ROM.
- Vacuum cleaner, Shop type.
- Oxygen charging assembly.
- Wrench, torque screwdriver.
- Tool rotary cutting.
- Respirator, air filter.
- Oven convection.
- Thermometer, oven.
- Goggles eye protection.
- Screwdriver modified.
- Apron rubber.

Appendix D

Equipment Forms and Records

This appendix lists all equipment forms and records that ALSE personnel use to control, manage, and maintain ALSE items. **Note:** ALSE personnel should review DA Pam 738-750 and DA Pam 738-751 on a regular basis to ensure that proper procedures are followed.

ARMYWIDE FORMS

D-1. The following forms are for Armywide use:

- DA Form 2402 (Exchange Tag). Identifies items for exchange, warranty claims, and equipment improvement recommendations/quality deficiency report exhibits.
- DA Form 2404 (Equipment Inspection and Maintenance Worksheet). Provides a record of faults found and corrective actions taken for inspections and repairs.
- DA Form 2405 (Maintenance Request Register). Provides a consolidated record of job orders initiated, received, and processed by maintenance activities.
- DA Form 2407 (Maintenance Request) and DA Form 2407-1 (Continuation Sheet). Provide a maintenance, modification work order, and warranty submittal system.
- DD Form 173/1 (Joint Message Form). Used for transmission of Category I EIRs, QDRs, and messages.
- DD Form 314 (Preventive Maintenance Schedule and Record). Used for record of chemical mask inspections.
- SF 368 (Product Quality Deficiency Report). Used for Category II EIRs, QDRs for defects in equipment due to faults in design, operation, failure, or manufacturing.

Note: Materiel condition tags and labels (DD Form 1570-series forms) are used to show the identity and condition of ALSE. These tags are used in addition to the other forms, records, and tags.

- DD Form 1574 (Serviceable Tag - Materiel) and DD Form 1574-1 (Serviceable Label - Materiel) (YELLOW). Identify conditions of serviceable materiel.
- DD Form 1575 (Suspended Tag - Materiel) and DD Form 1575-1 (Suspended Label - Materiel) (BROWN). Identify conditions of suspended materiel.
- DD Form 1576 (Test/Modification Tag - Materiel) and DD Form 1576-1 (Test/Modification Label - Materiel) (BLUE). Identify serviceable

materiel requiring testing, modification, alteration, conversion, or disassembly.

- DD Form 1577 (Unserviceable [Condemned] Tag - Materiel) and DD Form 1577-1 (Unserviceable (Condemned) Label - Materiel) (RED). Identify conditions of unserviceable (condemned) materiel.
- DD Form 1577-2 (Unserviceable [Repairable] Tag - Materiel) and DD Form 1577-3 (Unserviceable [Repairable] Label - Materiel) (GREEN). Identify conditions of unserviceable (repairable) materiel.
- DA Form 2408-21 (Life Raft Inspection Record). Provides a record of life raft inspection, inventory, and maintenance actions.
- DA Form 2408-22 (Helmet and Oxygen Mask/Connector Inspection Record). Provides a record of inspections, sizing, assignment, and maintenance actions.
- DA Form 2408-23 (Survival Radio/Emergency Location Transmitter Inspection Record). Provides a record of all inspection and maintenance requirements.
- DA Form 2408-24 (Survival Kit Inspection and Maintenance Record). Provides a record of inventory, inspections, and maintenance requirements.
- DA Form 2408-25 (Mesh Net Survival Vest Inspection Record). Provides a record of inventory, inspections, and maintenance requirements.
- DA Form 2408-26 (Life Preserver Inspection Record). Provides a record of inspections, service, and maintenance requirements.

Note: DA Form 2408-26 is not required if DA Form 2408-27 is maintained.

- DA Form 2408-27 (Life Preserver Data). Provides a record of inspections and service.
- DA Form 2408-28 (Oxygen Console Service Record). Provides a record of inspections, service, inventory, and maintenance requirements.
- DA Form 2408-29 (Anti-exposure Coveralls Inspection Record). Provides a record of inspections and maintenance requirements.

LOCAL FORMS

D-2. The following forms are for local use:

- First Aid Kit Inspection Record (see Figure D-1). Provides a record of inspections, inventory, expiration dates, and lot numbers.
- AFTO Form 104 (First Aid Kit/Survival Kit Inspection Certificate). Is recommended for use on first aid kits packed in survival kits and vests.

1 TYPE First Aid Kit Gen Purpose Panel Mounted	2 SERIAL NO.	3 LOCATION 82-6379	4 NEXT INSPECTION DUE May 1987

5 NSN	6 IDENTIFICATION	7 LOT=	8 QTY	9 SHELF LIFE MONTHS	10 INSPECTION CODES	11 MFD	12 EXPIRATION DATE
6545-00-912-9860	Case, Medical Inst.	DSA 120 74-C-2984	EA 1	Cond.	C1, B3, G1, G3 H3	—	Cond.
6505-00-106-0875	Ammonia Inhalant Sol.	1268	PG 1	Cond.	A1, C2, E3, M1	9/84	Cond.
POCKET 6510-00-200-3075	Compress & Bandage	FS1823	PG 1	Cond.	B3	A 1/85	Cond.
6510-00-201-1755	Bandage, Muslin, Compress	04	EA 1	Cond.	B3	7/85	Cond.
6510-01-112-6414	Gauze, Petrolatum	DIN-073725 3360	PG 1	Cond.	A4, E4, M5, B4	—	Cond.
6515-00-754-0426	Blade, Surgical prep.	DLA 120-87 C-4410	PG 1	Cond.	C1,C2	5/87	Cond.
POCKET 6510-01-060-1639	Adhesive Tape, Surgical	6701	PG 3	36 Months.	A4, B3, G2	5/84	Reinspect/Test Date 5/87
6510-00-159-6883	Dressing, First Aid	1955	EA 3	Cond.	A1, B3, G1, A4 M5	3/87	Cond.
6545-00-853-6309	First Aid Kit, Eye Dressing	7G-1092	EA 1	36 Months.	A3, G1, H3, L5 M5	3/87	3/90
6510-01-010-0307	Proydone-iodine, Pads	6R31	PK 10	36 Months.	A6, D3	4/87	4-90
6510-00-200-3185	Bandage, Gauze Compressed	F5370	EA 2	Cond.	B3	A 11/78	Cond.
6510-00-913-7909	Bandage, Adhesive	5T1864	EA 18	36 Months.	G2, A4	9/85	Reinspect/Test Date 9/88
	Instruction Sheet First Aid						
	Artifical resperation instruction card						
	Components List sheet						

Figure D-1. Sample Format for a First Aid Kit Inspection Record

Glossary

AAC	acquisition advice code
AF	Air Force
AFB	Air Force Base
AFTO	Air Force technical order
ALSE	aviation life support equipment
ALSO	aviation life support officer
ALSS	aviation life support shop
AMDF	Army Master Data File
AR	Army regulation
ASO	aviation safety officer
ATOMS	Automated Technical Order Management System
AVIM	aviation intermediate maintenance
AVUM	aviation unit maintenance
C&RS	calibration and repair support
CAGE	commercial and government entity (code)
CD-ROM	compact disk – read only memory
CIF	central issue facility
CONEX	container express
CTA	common table of allowances
DA	Department of the Army
DLAR	Defense Logistics Agency Regulation
DOD	Department of Defense
DOIM	Directorate of Information Management
DSN	Defense Switching Network
EIR	equipment improvement recommendation
ELT	emergency locator transmitter
equip	equipment
F	Fahrenheit
FAX	facsimile
FM	field manual

FMO	forms management officer
HQ	headquarters
IAR	inventory adjustment report
LIN	line item number
LPU	life preserver unit
MAC	maintenance allocation chart
MARC	manpower and resource capability
MARKS	Modern Army Recordkeeping System
MATCAT	material category
MCW	modulated continuous wave
MFR	memorandum for record
MIPR	Military Interdepartmental Purchase Request
MOS	military occupational specialty
MTOE	modification table(s) of organization and equipment
MWO	modification work order
NAVAIR	Naval Air
NAVSUP	Naval Supply
NIIN	national item identification number
no	number
NSN	national stock number
OHR	operational hazard report
OPSEC	operations security
pam	pamphlet
PB	professional bulletin
PBO	property book officer
PC	pilot(s) in command
PCO	publication control officer
PLL	prescribed load list
PMCS	preventive maintenance checks and services
PN	part number
POC	point of contact
QDR	quality deficiency report
qty	quantity
ROD	report of discrepancy

RSSK	rigid seat survival kit
SALTS	Streamline Automatic Logistics Transmission System
SAR	search and rescue
SB	supply bulletin
SC	supply catalog
SOP	standing operating procedure
SOS	source of supply
SSSC	self-service supply center
TAMMS	The Army Maintenance Management System
TAMMS-A	The Army Maintenance Management System-Aviation
TB	technical bulletin
TDA	tables of distribution and allowances
TDY	temporary duty
TM	technical manual
TMDE	test, measurement, and diagnostic equipment
TO	technical order
TODO	technical office distribution order
TOE	table(s) of organization and equipment
TPL	thermal plastic liner
TRADOC	US Army Training and Doctrine Command
UDR	universal data repository
US	United States
USAF	United States Air Force
USAPA	US Army Publishing Agency
UTS	Universal Training Systems
WRASS	Western Region Aviation Survival School

Bibliography

Air Force Technical Order (AFTO) Form 43. *Request for US Air Force Technical Order Distribution Code Assignment or Change*. May 1998.

AFTO Form 104. *First Aid/Survival Kit Inspection* Certificate. 1 April 1971.

AFTO Form 187. *Technical Order Publications Request*. August 1983.

Air Force Form 1784. *Traveling Requisition*. September 1984.

Air Force Pamphlet 64-15. *Survival and Emergency Uses of the Parachute.* June 1983.

Air Force Regulation 64-4. *Survival Training (Vol 1 through 4).* July 1985.

AR 25-36. *Interservicing of Technical Manuals and Related Technology.* 12 May 1989.

AR 25-50. *Preparing and Managing Correspondence.* 21 November 1988.

AR 25-400-2. *The Modern Army Recordkeeping System (MARKS).* 26 February 1993.

AR 40-61. *Medical Logistics Policies and Procedures.* 25 January 1995.

AR 71-32. *Force Development and Documentation – Consolidated Policies.* 3 March 1997.

AR 95-1. *Flight Regulations.* 1 September 1997.

AR 190-11. *Physical Security of Arms, Ammunition, and Explosives.* 30 September 1993. Change No. 1. 12 February 1998.

AR 190-51. *Security of Unclassified Army Property (Sensitive and Nonsensitive).* 30 September 1993.

AR 310-25. *Dictionary of United States Army Terms.* 15 October 1983.

AR 310-50. *Authorized Abbreviations and Brevity Codes.* 15 November 1985.

AR 385-64. *US Army Explosives Safety Program*. 28 November 1997.

AR 385-95. *Army Aviation Accident Prevention*. 20 May 1991.

AR 500-2. *Search and Rescue (SAR) Operations.* 15 January 1980.

AR 700-84. *Issue and Sale of Personal Clothing.* 15 May 1983.

AR 702-18. *Materiel Quality Control Storage Standards:* (DLAR 4155.37) (AFR 69-10). 24 February 1993.

AR 710-2. *Inventory Management Supply Policy Below the Wholesale Level.* 31 October 1997.

AR 735-5. *Policies and Procedures for Property Accountability.* 31 January 1998.

AR 735-11-2. *Reporting of Item and Packaging Discrepancies (*DLAR 4140.55). 6 December 1991.

AR 750-32. *Airdrop, Parachute Recovery, and Aircraft Personnel Escape Systems.* 26 September 1997.

Aviation Subcourses: AV0661 - AV0664. *Aviation Survival (Parts I, II, III, IV).*

Common Table of Allowances (CTA) 8-100. *Army Medical Department Expendable/Durable Items.* 31 August 1994.

CTA 50-900. *Clothing and Individual Equipment.* 1 September 1994.

CTA 50-909. *Field and Garrison Furnishings and Equipment.* 1 August 1993.

CTA 50-970. *Expendable/Durable Items (Except: Medical, Class V, Repair Parts, and Heraldic Items).* 21 September 1990.

DA Form 12-R. *Request for Establishment of a Publications Account.* April 1996.

DA Form 17. *Requisition for Publications and Blank Forms.* (For Local Use Only). 1 October 1979.

DA Form 444. *Inventory Adjustment Report (IAR*). January 1982.

DA Form 581. *Request for Issue and Turn-In of Ammunition.* August 1989.

DA Form 2028. *Recommended Changes to Publications and Blank Forms.* 1 February 1974.

DA Form 2062. *Hand Receipt/Annex Number.* January 1982.

DA Form 2063-R. *Prescribed Load List.* January 1982.

DA Form 2064. *Document Register for Supply Actions.* January 1982.

DA Form 2402. *Exchange Tag.* December 1985.

DA Form 2404. *Equipment Inspection and Maintenance Worksheet.* 1 April 1979.

DA Form 2405. *Maintenance Request Register.* 1 April 1962.

DA Form 2407. *Maintenance Request.* July 1994.

DA Form 2407-1. *Maintenance Request-Continuation Sheet.* July 1994.

DA Form 2408-21. *Life Raft Inspection Record.* December 1991.

DA Form 2408-22. *Helmet and Oxygen Mask/Connector Inspection Record.* December 1991.

DA Form 2408-23. *Survival Radio/Emergency Location Transmitter Inspection Record*. December 1991.

DA Form 2408-24. *Survival Kit Inspection and Maintenance Record*. December 1991.

DA Form 2408-25. *Mesh Net Survival Vest Inspection Record*. October 1997.

DA Form 2408-26. *Life Preserver Inspection Record*. December 1991.

DA Form 2408-27. *Life Preserver Data*. December 1991.

DA Form 2408-28. *Oxygen Console Service Record*. December 1991.

DA Form 2408-29. *Antiexposure Coveralls Inspection Record*. January 1992.

DA Form 2696-R. *Operational Hazard Report*. March 1991.

DA Form 2765-1. *Request for Issue or Turn-In*. April 1976.

DA Form 3161. *Request for Issue or Turn-In*. May 1983.

DA Form 3749. *Equipment Receipt*. January 1982.

DA Form 4569. *Requisition Code Sheet*. July 1996.

DA Form 4697. *Department of the Army Report of Survey*. September 1981.

DA Pam 25-30. *Consolidated Index of Army Publications and Blank Forms*. 1 July 1999.

DA Pam 25-33. *User's Guide for Army Publications and Forms*. 15 September 1996.

DA Pam 25-40. *Administrative Publications: Action Officers Guide*. 1 October 1997.

DA Pam 385-40. *Army Accident Investigation and Reporting*. 1 November 1994.

DA Pam 710-2-1. *Using Unit Supply System (Manual Procedures)* (Standalone Pub). 31 December 1997.

DA Pam 710-2-2. *Supply Support Activity Supply System : Manual Procedures*. 30 September 1998.

DA Pam 738-750. *The Army Maintenance Management System (TAMMS)*. 1 August 1994.

DA Pam 738-751. *Functional Users Manual for the Army Maintenance Management System - Aviation (TAMMS—A)*. 15 March 1999.

DDAY DOD medical review catalog.

DD Form 173/1. *Joint Message Form*. March 1979.

DD Form 314. *Preventive Maintenance Schedule and Record*. December 1953.

DD Form 362. *Statement of Charges/Cash Collection Voucher.* July 1993.

DD Form 448. *Military Interdepartmental Purchase Request (MIPR).* June 1972.

DD Form 1131. *Cash Collection Voucher.* 1 April 1957.

DD Form 1150. *Request for Issue or Turn-In.* 1 October 1957.

DD Form 1348. *DOD Single Line Item Requisition System Document (Manual).* July 1991.

DD Form 1348-1A. *Issue Release/Receipt Document.* July 1991.

DD Form 1348m. *DOD Single Line Item Requisition System Document (Mechanical).* March 1974.

DD Form 1348-6. *DOD Single Line Item Requisition System Document (Manual Long-Form).* February 1985.

DD Form 1574. *Serviceable Tag - Materiel.* 1 October 1966.

DD Form 1574-1. *Serviceable Label - Materiel.* 1 October 1966.

DD Form 1575. *Suspended Tag - Materiel.* October 1966.

DD Form 1575-1. *Suspended Label - Materiel.* 1 October 1966.

DD Form 1576. *Test/Modification Tag - Materiel.* October 1966.

DD Form 1577. *Unserviceable (Condemned) Tag - Materiel.* October 1966.

DD Form 1577-1. *Unserviceable (Condemned) Label - Materiel.* 1 October 1966.

DD Form 1577-2. *Unserviceable (Repairable) Tag - Materiel.* 1 October 1966.

DD Form 1577-3. *Unserviceable (Repairable) Label - Materiel.* 1 October 1966.

FEDLOG Index of Federal Catalog System Publications, FEDLOG Management Data List (CD-ROM).

FEDLOG Master Cross-Reference List (CD-ROM)(Manufacturers' Part Numbers to National Stock Numbers), (NSNs to Manufacturers' Part Numbers), (Manufacturers' Code Sequence).

Flightfax.

FM 1-500. *Army Aviation Maintenance.* 27 January 1995.

FM 10-16. *General Fabric Repair.* 13 June 1984.

FM 21-76. *Survival.* 5 June 1992.

FM 25-100. *Training the Force.* 15 November 1988.

Maintenance Management Handbook (formerly Update 3-14). No longer in standalone; on CD-ROM in EM.0001; must be downloaded.

MEDCAT DOD medical catalog.

PB 1-series. *US Army Aviation Digest* (1955-1995).

Physical Security Handbook (formerly Update 10-3). No longer in standalone; on CD-ROM in EM.0001; must be downloaded.

SB 3-30-2. *Chemical-Biological Canisters and Filter Elements: Serviceability Lists (TO 14P4-1-151).* 21 November 1984.

SB 708-48. *Cataloging Handbook H4/H8, Commercial and Government Entity (CAGE) Sections A and B (48X Microfiche).* 1 October 1989.

SF 364. *Report of Discrepancy (ROD).* February 1980.

SF 368. *Product Quality Deficiency Report.* October 1985.

TB 9-1300-385. *Munitions: Restricted or Suspended.* 1 April 1999.

TB 43-PS-series. *The Preventive Maintenance Monthly (formerly PS Magazine).*

TB 43-180. *Calibration and Repair Requirements for the Maintenance of Army Materiel.* 1 November 1998.

TB 750-25. *Maintenance of Supplies and Equipment: Army Test, Measurement, and Diagnostic Equipment (TMDE) Calibration and Repair Support (C&RS) Program.* 1 March 1997.

TM 1-1500-204-23-1. *Aviation Unit Maintenance (AVUM) and Aviation Intermediate Maintenance (AVIM) Manual for General Aircraft Maintenance (General Maintenance and Practices) Volume 1.* 31 July 1992.

TM 3-4230-216-10. *Operator's Manual for Decontaminating Kit, Skin M258A1 and Training Aid, Skin Decontaminating: M58A1.* 17 May 1985.

TM 3-4240-312-12&P. *Unit Maintenance Manual for Mask, Chemical-Biological: Aircraft, M43, Type I Small, Medium, Large, Extra Large; Type II Small, Medium, Large, and Extra Large.* 30 June 1988.

TM 3-4240-334-20&P. *Unit Maintenance Manual Including Repair Parts and Special Tools List for Mask, Chemical-Biological: Aircraft, M43A1 Type I Small, Medium, Large, ExtraLarge: Type II Small, Medium, Large, Extra Large.* 15 May 1982.

TM 5-4220-202-14. *Maintenance Instructions with Parts Breakdown: USAF Flotation Equipment (TO 14S-1-102).* 1 April 1986.

TM 9-1270-212-14&P. *Operator's, Organizational, Direct Support, and General Support Maintenance Manual for Fire Control Subsystem, Helmet-Directed: XM128 and XM136.* 10 July 1981.

TM 9-1270-221-23. *Aviation Unit and Intermediate Maintenance Manual for Fire Control Subsystem, Helmet Directed: M142.* 11 April 1991.

TM 9-1270-221-23P. *Aviation Unit and Intermediate Maintenance Repair Parts and Special Tools List (Including Depot Maintenance Repair Parts) for Fire Control Subsystem, Helmet Directed: M142.* 17 August 1992.

TM 9-1270-233-23&P. *Aviation Unit and Intermediate Maintenance Manual (Including Repair Parts and Special Tools List) for Helmet Directed: Unit Integrated, Medium, Large, and Extra Large).* 15 December 1988.

TM 10-8400-201-23. *Unit and Direct Support Maintenance Manual: General Repair Procedures for Clothing.* 7 May 1990.

TM 10-8400-202-13. *Maintenance Instructions for Nomex Flight Gear Coveralls, Types, CWU-27/P and CWU-28/P; Gloves, Type GS/FRP-2; Jacket, Flyer's, Summer, Type CWU-36/P, and Winter, Type CWU-45/P; Hood, Winter, Flyer's, (CWU-17/P Jacket); Trousers, Flyer's, Extreme Cold Weather, CWU-18/P (TO 14P3-1-112).* 15 October 1972.

TM 10-8415-206-12&P. *Operator's and Organizational Maintenance Manual Including Repair Parts and Special Tools List for Helmet, Flyer's, Protective, Model SPH-4, Regular, (NSN 8415-00-144-4981); and Extra Large, (NSN 8415-00-144-4985).* 5 May 1986.

TM 10-8470-202-13. *Operation and Service Instructions for Ground and Aircrew Body Armor (TO 14P3-1-102).* 16 January 1984.

TM 10-8475-200-13. *Use, Inspection, Fitting, and Maintenance Instructions for Anti-Exposure Assembly, Type CWU-21/P or 21A/P (TO14P3-5-81).* 1 May 1969.

TM 10-8475-202-13. *Operation, Service, and Maintenance Instructions for Quick Donning Anti-Exposure Flying Coverall, Type CWU-16/P (TO 14P3-5-61).* 6 February 1984.

TM 11-5820-800-13&P. *Operator's, Aviation Unit, and Intermediate Maintenance Manual (Including Repair Parts and Special Tools List) for Radio Set, AN/PRC-90.* 5 March 1985.

TM 11-6625-2631-14. *Operator's, Organizational, Direct Support and General Support Maintenance Manual Including Repair Parts and Special Tools Lists for Test Sets Battery TS-2530/UR and TS-2530A/UR.* 30 October 1973.

TM 11-6625-2632-14. *Operator's, Organizational, Direct Support, and General Support Maintenance Manual (Including Depot Maintenance Repair Parts and Special Tools List) for Radio Set, AN/PRM-32.* 11 December 1973.

TM 38-230-2. *Packaging of Materiel: Packing (Volume II) (DLAM 4145.2 Volume II; NAVSUP Pub 503 Volume II; AFP 71-16 Volume II; MCO P4030.21C.* 15 June 1977.

TM 55-1660-245-13. *Maintenance Instructions: Oxygen Equipment F34601-76-D-1782 (TO 15X-1-1; NAVAIR 03-50-1*). 1 August 1981.

TM 55-1660-247-12. *Operation, Fitting, Inspection, and Maintenance Instructions with Illustrated Parts Breakdown for MBU-12/P Pressure-Demand Oxygen Mask (TO 15X5-3-6-1).* 1 April 1981.

TM 55-1680-317-23&P. *Aviation Unit and Aviation Intermediate Maintenance Manual with Repair Parts and Special Tools List for Army Aircraft Survival Kits.* 26 March 1987.

TM 55-1680-322-12. *Operation and Service: Distress Marker Light, Part No. SDU-5/E (TO 14S10-2-2).* 15 June 1987.

TM 55-1730-226-13. *Operator's, Aviation Unit, and Intermediate Maintenance Manual for Oxygen Servicing Unit, Part No. AA1730-1315 (NSN 1730-00-435-7817).* 28 April 1980.

TM 55-6695-217-13. *Operation and Maintenance Instructions with Illustrated Parts Breakdown for Tester, Oxygen Mask, Headset, Breakdown Microphone, and Flash Goggles, Type MQ-1A, PN 1854 (TO 33D2-10-10-41).* 27 August 1986.

TM 55-6695-217-23P. *Aviation Unit and Aviation Intermediate Maintenance Repair Parts and Special Tools List, Tester, Oxygen Mask, Headset, Microphone and Goggles, Type MQ-1A, PN 1854 (NSN 6695-01-097-0441).* 5 September 1986.

TM 743-200-1. *Storage and Materials Handling.* 15 January 1958.

TM 750-244-1-2. *Procedures for the Destruction of Life Support Equipment to Prevent Enemy Use.* 22 October 1971.

TM 750-244-1-5. *Procedures for the Destruction of Aircraft and Associated Life Support Equipment to Prevent Enemy Use.* 12 November 1971.

*TO 0-1-01. *Numerical Index.*

*TO 0-1-02. *Numerical Index.*

*TO 00-5-1. *Technical Order System.*

*TO 00-5-2. *Technical Order Distribution System.*

TO 11A-1-1. *Ammunition Restricted or Suspended.*

TO 14S1-4-1. *Distillation Kit.* (***Note:*** Army TM 5-813-8, 15 September 1986, on water desalination, is more current.)

TO 14S1-4-22. *Desalter Kit.*

TO 15X5-4-1-101. *Oxygen Mask Connector (CRU-60/P).*

TO 15X5-4-4-12. *Intermediate Maintenance Instructions: Pressure Demand Breathing Oxygen Mask, USAF Type MBU-5/P.*

TO 15X5-4-4-13. *Overhaul Instructions with Illustrated Parts Breakdown for MBU-5/P Oxygen Mask.*

TO 31R2-2PRC90-1. *Operation and Maintenance Instructions for Radio Set AN/PRC90-1 and Radio Set AN/PRC90-2. (**Note:*** For AN/PRC90, refer to Army TM 11-5820-800-13&P; for AN/PRC90-2, refer to Army TM 22-5820-1949-P.)

TO 31R2-2PRC90-2. *Intermediate Maintenance Instructions for Radio Set AN/PRC90-1 and Radio Set AN/PRC90-2.*

TO 31R2-2PRC90-4. *Illustrated Parts Breakdown for Radio Set AN/PRC90-1 and Radio Set AN/PRC90-2.*

TO 33D7-71-42-1. *Operation and Maintenance Instructions with Illustrated Parts Breakdown for Radio Test Set Model ARC/TS-24(B), NSN 6625-01-128-8588LS.*

TO 33K3-4-196-1. *Calibration Procedures for Radio Test Set TS-24(B).*

(**Notes**:*TOs with TM numbers do not appear here. They are collocated with the TM numbers. Refer to Chapter 4 for TO requisitioning procedures. TO is not needed to support the ALSE Program; it is needed only if unit has an Air Force TODO.)

Unit Supply Handbook (formerly Update 2-14). No longer in standalone; on CD-ROM in EM.0001 and must be downloaded.

00-25-100. *Naval Air Systems Command Technical Manual Program*. (Naval Air Publication).

00-25DRT-1. *Automatic Distribution Ordering Blanks.* (Naval Air Publication).

00-80T-101. *NATOPS Survival Manual. (*Naval Air Publication).

13-1-6.1. *Aviation - Crew Systems Inflatable Survival Equipment. (*Naval Air Publication).

13-1-6.4. *Diluter Demand Torso Mounted Regulator Used with Helicopter Oxygen System*. (Naval Air Publication).

13-1-6.7. *Aviation - Crew Systems Aircrew Personal Protective Equipment.* (Naval Air Publication).

2002. *Navy Index of Publications.(* (Navy Supply Publication).

(**Note:** The following addresses are provided to order publications: **Air Force Publications**–Commander, Oklahoma City Air Logistics Center, ATTN: ALC/TILUB, 7851 Arnold Street, Suite 201, Tinker AFB, OK 73145-9147. **Air**

Force Forms–Commander, Air Force Publication Distribution Center, 2800 Eastern Boulevard, Baltimore, MD 21220-2898. **Navy Publications and Forms**–Commander, Naval Air Technical Data and Engineering Service Command, Naval Air Station, North Island, P.O. Box 357031, San Diego, CA 92135-7031. Publications and Forms Branch, National Inventory Control Point, ATTN: Customer Service, Bldg 1, Rm 3401, 700 Robbins Avenue,Philadelphia, PA 19111-5098. **Aviation Life Support Course,** Bldg 6005, Fort Rucker AL 36362.)

Index

References are to paragraph numbers except for illustrations, which are listed by figure numbers.

A

aircrew. *See* personnel, ALSE, aircrew, responsibilities of

ALSE

accountability of, 2-30 thru 2-32

authorization of, 2-24

aircraft, 2-24

cleaning of, 2-21, 3-1 thru 3-4, 3-9

control procedures, 2-30 and 2-32

identification (marking of), 2-30 thru 2-32

inspections. *See* maintenance inspection

maintenance. *See* maintenance, ALSE

on-hand, 2-24

records. *See* records, equipment

request procedures, 6-3 and 6-4

responsibility for, 2-30 thru 2-32

security, 2-30 thru 2-32, 3-1 thru 3-8

shop, 2-6 thru 2-12

design, 3-1

floors, 3-1

environmental control standards,

3-9

equipment, support, 3-8

list of, C-1, C-2

lighting, 2-9, 3-5, 3-6

location, 2-10, 3-2

layout, Fig B-1 thru B-22

mobility, 2-7

organization, 2-6, 3-1 thru 3-9

oxygen, with and without, 3-1

personnel, 2-6

fitting area, 3-6

maintenance tasks, 2-5

office space 3-7

safety of, 3-11

standing operating procedures (SOP),

See Sample SOP, Fig A-1

storage area,

2-10, 3-5

storage cabinets, 2-10

work area, 2-9,

3-3, 3-4

work benches, 3-3

source agencies, 2-20

storage of, 2-33

flammables,

2-33

pyrotechnics,

2-33

tagging of, 2-21,

2-25, 2-26, 2-32, 5-2, D-1

unserviceable, 2-4

Army publications system 4-1 thru 4-5

Aviation intermediate maintenance (AVIM)

ALSE operations, summary para (Chap 2), para 2-5, units, 2-5 thru 2-8

aviation life support officer (ALSO). See personnel, ALSE, aviation life support officer, (ALSO)

aviation unit maintenance (AVUM)

ALSE operations, summary para (Chap 2) units, 2-1 thru 2-8

AVIM. *See* aviation intermediate maintenance (AVIM)

AVUM. *See* aviation unit maintenance (AVUM)

B

budget, ALSE, 2-18, 2-19

annual, 2-19

management of, 2-18

C

commander

inspections. *See* maintenance inspections,

commander

responsibilities of, 2-14

unit commander

responsibilities of,

2-4

D

documentation procedures.

automated. See note, Fig 6-11

manual, 6-5, 6-6

E

equipment. *See* ALSE equipment improvement

recommendations (EIRs),

2-27, 5-1

F

files

maintenance of, 2-27
forms, 5-1, 6-4
list of, D-1, D-2
on hand, 5-2
report of discrepancy (ROD), 6-7
supply, list of, 6-4
use of, 5-1, 5-2
antiexposure overalls inspection record (DA Form 2408-29), D-1
equipment inspection and maintenance worksheet (DA Form 2404), D-1
exchange tag (DA Form 2402), D-1
first aid kit/ inspection record (local form) D-2, Fig D-1
first aid kit/survival kit inspection certificate (AFTO Form 104), D-2
helmet and oxygen mask/connector inspection record (DA Form 2408-22), D-1
joint messageform (DD Form 173/1), D-1
life preserver data (DA Form 2408-27), D-1
life preserver inspection (DA Form 2408-26), D-1
life raft inspection record (DA Form 2408-21), D-1
maintenance request (DA Form 2407 and continuation sheet (DA Form 2407-1), D-1
maintenance request register (DA Form 2405),D-1
mesh net survival vest inspection record (DA Form 2408-25), D-1
oxygen console service record (DA Form 2408-28), D-1
product quality deficiency report (SF 368), D-1
serviceable tag – materiel (DD Form 1574) and
serviceable label – materiel (DD Form 1574-1) (yellow), D-1
survival kit inspection and maintenance record (DA Form 2408-24), D-1
survival radio/ emergency location transmitter (ELT) inspection record (DA Form 2408-23), D-1
suspended tag – materiel (DD Form 1575) and
suspended label – materiel (DD Form 1575-1) (brown), D-1
test/modification tag – materiel (DD Form 1576) and test/modification label (DD Form 1576-1) (blue), D-1
unserviceable (condemned) tag – materiel (DD Form 1577-2) and unserviceable (repairable) label – materiel (DD Form 1577-3) (green), D-1
want slip, Fig 6-1

H

hygiene, personal, 3-10

M

maintenance,
aircraft , 2-3
ALSE, 2-1
commanders, 2-14
concept of operations, 2-1 thru 2-13
daily requirements, 2-24
120-day, 2-24
initial acceptance, 2-21
inspections, 2-21
life support equipment inspection calendar, 2-26, Fig 2-3
management of, 2-24
equipment status board sample, 2-25, Fig 2-2
postflight, 2-21
preflight, 2-21
scheduling of, 2-24
management, 2-1 thru 2-13
aircrew, 2-1 thru 2-4
objectives, 2-1 thru 2-3
primary, 2-3
secondary, 2-3
policies, 2-4
preventative maintenance checks and services (PMCS), 2-21
quality, 2-4
repair, 2-4

scheduling, 2-22 thru 2-24
equipment scheduling reference guide, Fig 2-1
serviceable parts, 2-21
special, 2-21
systems and procedures, 2-14 thru 2-17, 2-21
time criteria, 2-24
turn-in, 2-21

P

parts, repair
on hand, 6-8
request procedures, 6-4
storage of, 2-6, 3-5
personnel, ALSE, 2-11
aircrew, responsibilities of, 2-17. See also maintenance management, aircrew
aviation life support officer (ALSO), 2-15
appointment of, 2-14
responsibilities of, 2-15, summary para (Chap 2)
technician, 2-16
appointment of, 2-14
military occupational specialty (MOS), 2-3
responsibilities of, 2-5, 2-16, 6-10
preflight inspection. *See* maintenance inspections, preflight
prescribed load list (PLL), 6-8 thru 6-11
authorized stockage, 6-9
consolidated, Fig 6-13
definition, 6-8
procedures, 2-18
storage of, 6-10
publications
accounts, establishing of
air force, 4-6 thru 4-9, Fig, 4-1, Fig 4-3
navy, 4-10 and 4-11, Fig 4-2, Fig 4-3
army system, 4-1 thru 4-5
library, 2-28, 2-29, 4-3
accounts, establishing of, 4-1, 4-2, 4-6 thru 4-10, 4-14, 4-16, 4-17
disposal of, 4-4
excess, 4-5
interservice, 4-6 thru 4-17
continuing requirements, submitting of, Air Force and Navy, 4-12 thru and 4-17
one-time requirement, submitting of, 4-7 thru 4-11
Air Force, 4-8 and 4-9, Fig 4-1
Navy, 4-10 and 4-11, Fig 4-2
maintaining, 2-28 and 2-29
DA Pam 25-30, use of, 2-29
setting up 4-3,
management of, summary para (Chap 4), 4-1 thru 4-5, 4-6 thru 4-17
procurement of, 4-1
section, DOIM, 4-1
supply, list of, 6-1 and 6-2
Army Master Data File (AMDF), 6-1
common tables of allowances (CTA), 6-2

Q

quality deficiency reports (QDRs), 2-27, 5-1

R

records, equipment, 5-2
replacement of, 5-3
types of, 5-2
use of, 5-2, app D

S

standing operating procedures (SOP) ALSE, 2-17, 2-30, 2-31, 3-11 sample, Fig A-1 (1 thru 7)
supply
administration of, 6-1 thru 6-11
Air Force, 4-6 thru 4-9, 4-12 thru 4-15, Fig 4-1, Fig 4-3
facilities, 2-32
central issue (CIF), 2-21, 2-32,
forms. *See* forms issue,
request for, 6-4
general services administration, 6-4
maintenance of, 2-11
Navy, 4-6, 4-7, 4-10, 4-11, Fig 4-2, Fig 4-3
publications. See publications, supply
purchase request, military interdepartmental (MIPR), Fig 6-2, 6-4
request for, 6-3
transfer, lateral, Fig 6-7
turn-in, request for, Fig 6-5
types of, 6-12
durable, 6-4
expendable, 2-31, 6-4, 6-12
bench stock, 6-13
shop stock, 6-15, 6-16
nonexpendable, 2-31, 6-4

T

training, aircrew

Universal Training systems (UTS), 7-4
Western Region Aviation Survival School (WRASS), 7-4, 7-5
threats, 1-1 thru 1-9
characteristics of, 1-1 thru 1-4
general, to aviation maintenance units, 1-5, 1-6
indirect, 1-5
in high- or low-technology conflict, 1-3 and 1-4
specific to ALSE, 1-7 thru 1-9
ground and air, 1-7
nuclear, chemical, or biological, 1-7, 1-8
blister agents, 1-8
nerve agents, 1-8
residue, 1-7, 1-9
sabotaged equipment, 1-7
unexploded munitions, 1-7
tool kit, ALSE, summary para (App C)
tools,
common list of, C-1
special list of, C

W

Western region aviation survival school (WRASS). *See* Training, aircrew, 7-1

FM 1-508
1 MARCH 2000

By Order of the Secretary of the Army:

ERIC K. SHINSEKI
General, United States Army
Chief of Staff

Official:

JOEL B. HUDSON
Administrative Assistant to the
Secretary of the Army
0000603

DISTRIBUTION:

Active Army, Army National Guard, and U.S. Army Reserve: To be distributed in accordance with the initial distribution number 110730, requirements for FM 1-508.