FM 1-303

AIR TRAFFIC CONTROL FACILITY OPERATIONS AND TRAINING

HEADQUARTERS, DEPARTMENT OF THE ARMY

DISTRIBUTION RESTRICTION: Approved for public release;
distribution is unlimited.

FIELD MANUAL 1-303

HEADQUARTERS
DEPARTMENT OF THE ARMY
Washington, DC, 5 April 1993

AIR TRAFFIC CONTROL FACILITY OPERATIONS AND TRAINING

CONTENTS

		Page
PREFACE		v
CHAPTER 1	**INTRODUCTION**	
1-1.	Waivers	1-1
1-2.	Air Traffic Control Certification and Rating	1-1
1-3.	Facility Classification and Appearance	1-2
1-4.	Air Traffic Control Awards	1-2
1-5.	Appendixes, Terms, Symbols, and Word Meanings	1-2
CHAPTER 2	**FACILITY ADMINISTRATION**	
	Section I. Responsibilities and Procedures	
2-1.	Supervisory Positions and Responsibilities	2-1
2-2.	Control Positions and Responsibilities	2-5
2-3.	Operating Initials	2-7
2-4.	Facility Currency	2-7
2-5.	Non-ATC Duty Performance	2-7
2-6.	Noncontroller Personnel in ATC Facilities	2-7
2-7.	Special Medical Considerations	2-7
2-8.	Time Standards	2-8
2-9.	Hours of Operation	2-8
2-10.	Maximum Hours of Duty	2-8
2-11.	Minimum Shift Requirements for Fixed Facilities	2-9
2-12.	Position Consolidation	2-9
2-13.	Position Assignments	2-10
2-14.	Position Responsibility Transfer	2-10

DISTRIBUTION RESTRICTION: Approved for public release; distribution is unlimited.

---

* This publication supersedes TC 95-93, 22 March 1989.

Page

2-15. Duty Releases 2-11
2-16. Emergency Manning Levels 2-11
2-17. Control and Coordination of Airfield/Heliport Areas 2-13
2-18. Airport Advisory Service 2-13
2-19. Maintenance Personnel 2-13
2-20. Counterdrug Operations 2-14

Section II. Weather and Emergency Requirements

2-21. Cooperative Weather Watch 2-14
2-22. Tower Visibility Observations 2-15
2-23. Density Altitude Advisory Broadcast 2-16
2-24. Weather Observation Relay 2-16
2-25. Weather Data Retention 2-16
2-26. Visibility Checkpoint Charts 2-17
2-27. Airfield Weather Status 2-17
2-28. Aircraft Accidents and Incidents 2-17
2-29. Accidents or Incidents Involving Radar Facilities 2-19
2-30. Information Release 2-19
2-31. Notices to Airmen 2-19
2-32. Communications Procedures 2-19

CHAPTER 3 FACILITY EQUIPMENT

3-1. Equipment Layouts 3-1
3-2. Equipment Checks 3-1
3-3. Facility Maintenance 3-2
3-4. Facility Ground Inspection, Certification, and Recertification Procedures 3-2
3-5. Automatic Terminal Information Service 3-3
3-6. Clocks 3-4
3-7. Light Guns 3-4
3-8. Crash Alarm System 3-4
3-9. Radar/NAVAID Emergency Warning and Evacuation System 3-4
3-10. Digital Bright Radar Indicator Tower Equipment 3-4
3-11. Telephone Lines 3-6
3-12. Radio Equipment 3-7
3-13. Search and Rescue Satellite 3-7
3-14. Recorders 3-8
3-15. Navigational Aids 3-14
3-16. Wind Indicator Equipment 3-15
3-17. Altimeters 3-16
3-18. Egress Systems 3-17
3-19. Night Vision Goggles 3-17

Page

CHAPTER 4 REFERENCE MATERIAL

Section I. Reference Files, Charts, Diagrams, and Maps

4-1. Facility Reference File 4-1
4-2. Controller Reference File 4-1
4-3. Recent Information File 4-2
4-4. Operating Position Files 4-2
4-5. Charts, Diagrams, and Maps 4-3

Section II. Administrative Correspondence

4-6. Letters of Agreement 4-4
4-7. Operations Letters 4-7
4-8. Memorandums 4-10

Section III. Operating Records and Forms

4-9. GCA Operations Log 4-10
4-10. Daily Report of Air Traffic Control Facility. . 4-11
4-11. Air Traffic Control Position Log 4-13
4-12. ATC Facility and Personnel Status Report . . . 4-13
4-13. Training and Proficiency Record - Air Traffic Controller and Trainee/Controller Evaluation 4-19
4-14. Flight Progress Strips 4-19
4-15. Aeronautical Facility - SCATANA Actions and SCATANA Test Report Card 4-19
4-16. Operational Hazard Report 4-20
4-17. Equipment Checklist 4-20

CHAPTER 5 RADAR FACILITIES

5-1. Radar Service 5-1
5-2. Daily Performance Checks 5-1
5-3. Display Indicators 5-2
5-4. Automation Program Changes 5-3
5-5. Automatic Acquisition and Termination Areas . . 5-3
5-6. TPX-42 System 5-4
5-7. Radar Mapping 5-4
5-8. Airport Surveillance Radar 5-6
5-9. Minimum Vectoring Altitude Charts 5-6
5-10. Minimum Safe Altitude Warning and Conflict Alert 5-9
5-11. Magnetic Variation of Video, Geographical, and MSAW Digital Terrain Maps 5-9
5-12. Digital Map Verification 5-10
5-13. Radar Beacons 5-10

Page

CHAPTER 6 FLIGHT FOLLOWING

6-1. Purpose 6-1
6-2. Responsibilities 6-1
6-3. Procedures. 6-3
6-4. Records 6-5

CHAPTER 7 FACILITY TRAINING PROGRAM

7-1. Program of Instruction 7-1
7-2. Types of Training 7-1
7-3. Training Phases 7-1
7-4. Administration and Management Training 7-3
7-5. Facility Training Manual 7-4
7-6. Facility Training Schedule 7-4
7-7. Training and Proficiency Record - Air Traffic Controller 7-5
7-8. Trainee/Controller Evaluation 7-9

CHAPTER 8 TACTICAL AIR TRAFFIC SERVICES

8-1. Planning 8-1
8-2. Responsibilities 8-2
8-3. Procedures 8-4
8-4. Tactical Air Traffic Controllers' Qualification and Rating Program 8-5
8-5. Equipment Checks 8-7
8-6. Tower, Radar, NAVAID, and FOC/FCC Services . . 8-7
8-7. Deployment and Employment 8-7
8-8. Reference Material 8-8
8-9. Tactical Approach Publications System 8-8

APPENDIX A. FACILITY TRAINING MANUALS A-1

APPENDIX B. PUBLICATION REFERENCE FILES B-1

APPENDIX C. AIR TRAFFIC CONTROL AWARDS PROGRAM C-1

APPENDIX D. THEODOLITE OPERATIONS D-1

APPENDIX E. GROUND INSPECTION E-1

APPENDIX F. ATC MAINTENANCE CERTIFICATION PROGRAM F-1

GLOSSARY Glossary-1

REFERENCES References-1

INDEX Index-1

PREFACE

This publication provides instructions, standards, and guidance for operating and managing US Army air traffic control facilities and units. It is intended for use by all active Army, Army National Guard, US Army Reserve, Department of the Army civilians, and contract personnel who perform ATC duties for the US Army. All standards, policies, and procedures in this manual are mandatory per AR 95-2.

This field manual supplements FAA Handbook 7110.65, which prescribes separation minima and procedures to be used in providing ATC services. When the US Army is providing ATC services for or in overseas areas, deviations from these standards may be necessary to conform to foreign government regulations. Deviations shall be outlined in an agreement between the theater commander and the host government concerned or between the host government's military commanders or ATC authorities and the US Army's commanders or ATC authorities. Combat support ATC services performed to support aviation mission requirements also may dictate deviations from established standards. Such deviations shall be approved in writing by the senior aviation commander.

The proponent of this publication is HQ TRADOC. Send comments and recommendations on DA Form 2028 directly to Commander, US Army Aviation Center, ATTN: ATZQ-ATC-MO, Fort Rucker, AL 36362-5265.

This publication has been reviewed for operations security considerations.

Unless this publication states otherwise, masculine nouns and pronouns do not refer exclusively to men.

CHAPTER 1

INTRODUCTION

The policies and procedures in this manual standardize US Army ATC training, facilities, operations, and management. Procedures dealing with currency, operational requirements, and position responsibilities and duties are the minimum standard unless stated otherwise. The ATC chief/ATC facility chief is responsible for facility operations, quality assurance, training, and rating standards. At his discretion, he may increase any or all of the minimum requirements established by this manual.

1-1. WAIVERS

a. Requests for waivers to policies or procedures shall be sent through channels to Commander, US Army Aviation Center, ATTN: ATZQ-ATC-MO, Fort Rucker, AL 36362-5265. When a waiver must be expedited, an organization may get interim approval by phone, through channels, from the US Army Air Traffic Control Activity (DSN 558-2060/4022).

b. The organization initiating the requests shall be responsible for the requests for renewal or extension of waivers. Subordinate and intermediate commands will ensure that all requests are endorsed or commented on appropriately and then sent to USAATCA. All approved waivers will contain a cancellation date or condition in the final paragraph. USAATCA will conduct a periodic review of all waivers.

1-2. AIR TRAFFIC CONTROL CERTIFICATION AND RATING

Military, DAC, and contract personnel performing ATC duties in ATC facilities shall become qualified and facility-rated per AR 95-2. They shall remain current as specified in this manual. All controllers and supervisors, both military and civilian, must meet and maintain the physical standards of AR 40-501, the OPM Handbook X-118, or their official job descriptions. Foreign nationals performing ATC duties in US Army facilities shall comply with the ATC physical requirements of the host nation.

1-3. FACILITY CLASSIFICATION AND APPEARANCE

a. Classification.

(1) Fixed ATC facilities are grouped into five major classifications. These classifications are--

- Airfield/heliport ATC tower.
- Ground-controlled approach.
- Army flight-following service.
- Army approach control (nonradar).
- Army radar approach control.

(2) Tactical ATC facilities are grouped into four major classifications. These classifications are--

- Tower.
- Ground-controlled approach.
- Flight operations center.
- Flight coordination center.

b. Appearance. The facility chief shall be responsible for the appearance of the ATC facility and assigned personnel. Their appearance shall always reflect the high standards of the US Army.

1-4. AIR TRAFFIC CONTROL AWARDS

Appendix C provides guidance and policy on the Army ATC Awards Program. It gives the format and other criteria for nominating Army military and civilian personnel for the awards.

1-5. APPENDIXES, TERMS, SYMBOLS, AND WORD MEANINGS

a. Appendixes. The appendixes in this manual provide additional information and guidance. Appendixes A, B, and C contain the facility training manual outlines, required references lists for the facilities/elements, and the ATC Awards Program, respectively. Appendixes D, E, and F explain theodolite operations, ground inspection, and the ATC Maintenance Certification Program, respectively.

b. Terms. To understand this publication, the reader must be familiar with the terms used. The Glossary explains the terms, as well as the acronyms and abbreviations, used in this field manual.

c. Symbols. The diagonal (/) indicates or or and. For example, orders/handbooks may mean orders or handbooks or may mean orders and handbooks.

d. Word Meanings.

(1) Shall or an action verb in the imperative mood means a procedure is mandatory.

(2) Should means a procedure is recommended.

(3) May or need not means a procedure is optional.

(4) Will means futurity; it is not a requirement for the application of a procedure.

(5) Aircraft means the airframe or crew members or both.

(6) ATC-certified means the person graduated from a formal ATC school and possesses an ATCS certificate.

(7) Position-qualified means a controller passed all phases of training for a particular operating position (LC, GC, PAR) and received a satisfactory evaluation on DA Form 3479-l-R.

(8) Facility-rated means a controller completed all phases of training, received a satisfactory evaluation on DA Form 3479-l-R, and possesses the appropriate certification for a particular facility.

CHAPTER 2

FACILITY ADMINISTRATION

Section I. Responsibilities and Procedures

The supervisory and control positions and responsibilities outlined in AR 95-2 and listed in this section are mandatory requirements. Operating positions shall be manned and functions performed only by ATC personnel who are qualified to perform the duties. Also explained are the requirements and procedures for day-to-day facility operations. ATC facilities shall use local SOPS to supplement these requirements when necessary.

2-1. SUPERVISORY POSITIONS AND RESPONSIBILITIES

a. **ATC Chief.** The ATC chief supervises and manages all ATC facilities located at an airfield or a heliport. He also--

- Provides liaison on matters of ATC and airspace with the AT&A; DARR; FAA: MACOMs; local post, camp, or station commander; and representatives of other units, agencies, or commands.
- Ensures that ATC systems are operationally acceptable.
- Ensures that facilities collect and safeguard data on aircraft mishaps, emergencies, or violations.
- Ensures that assigned ATC personnel maintain currency.
- Ensures that facilities set up and conduct training and rating programs according to prescribed regulations.

b. **ATC Facility Chief.** The ATC facility chief manages the applicable ATC facility and personnel. He also--

- Ensures that the facility operates according to military and FAA rules and regulations that apply to ATC.
- Develops and maintains a facility training program.
- Develops TERPS.
- Ensures that all controllers meet the physical standards of AR 40-501.

- Ensures the operational readiness of facility equipment and associated NAVAIDs.
- Maintains a current file of pertinent regulations, manuals, charts, maps, and training material.
- Ensures that assigned personnel maintain currency.
- Maintains custodial control of all facility forms, records, and publications and ensures their accuracy, completeness, and distribution.
- Initiates and maintains a facility duty schedule.

c. ATC Training Supervisor. The ATC training supervisor is a facility-rated ATC specialist designated by the facility chief. The training supervisor--

- Plans, schedules, directs, and supervises the facility training of assigned ATC personnel.
- Supervises and conducts classroom and self-study training.
- Develops local course material, training aids, and control scenarios to supplement DA, USAAVNC, and FAA training programs.
- Evaluates and analyzes the capabilities and progress of the ATC personnel assigned to that facility.
- Maintains training records.
- Ensures the position qualification of trainees.
- Recommends trainees for a facility rating.
- Recommends to the ATC facility chief those controllers who require proficiency or remedial training. The training supervisor bases his recommendations on both personal observations and SS comments.

d. Data Systems Officer. The DSO is responsible to the facility chief for integrating, operating, and modifying ATC automation systems. A DSO should be appointed when the complexity of the automation system requires three or more full-time data system specialists. The DSO also--

- Maintains familiarity with all control scenarios.

- Develops computer programs for the facility.
- Represents the ATC chief/ATC facility chief during meetings or negotiations concerning automation.
- Prepares the automation status reports, notices, and correspondence necessary for managing and operating the automation system.
- Prepares recommendations, justifications, and estimates for automation system upgrades.
- Maintains liaison with other DSOs (FAA and military).
- Analyzes procedures; traffic flow; and data processing, transfer, and display information.
- Supervises the data system specialists.

e. Data Systems Specialist. The DSS ensures that the facility computer and related equipment function properly. He also--

- Performs systems analyses.
- Develops and modifies the program.
- Ensures program accuracy.
- Coordinates with adjacent automated facilities.
- Identifies the operational or procedural impact of program patches and changes.

f. Shift Supervisor. During the SS's tour of duty, he is responsible to the facility chief for the efficiency of facility operations. The SS--

- Assigns and directs all phases of the subordinates' work.
- Makes sure personnel receive on-the-job training.
- Assists and advises controllers during emergency situations.
- Maintains facility records.
- Makes sure personnel are current and proficient.

- Notifies search and rescue facilities of aircraft in distress and provides assistance and advice.
- Delegates responsibility to subordinates and assists the training supervisor.
- Evaluates the operational effectiveness of facility systems, subsystems, and equipment.
- Records and reports outages and takes action to correct discrepancies.

g. Controller-in-charge.

(1) When supervisory personnel leave the facility or are off duty, the ATC facility chief or SS shall designate a CIC for the period the supervisor is absent. Assigning a CIC assures that coordination and cooperation will continue when the SS is not available.

(2) The CIC shall assume all duties and responsibilities of the SS. He may also be required to perform his normal ATC duties in addition to those of the SS.

(3) The ATC facility chief or SS should rotate the CIC assignment among the facility's potential supervisors. The purpose of this procedure is to expose them to the duties and responsibilities of the SS. It is not an attempt to preempt the military rank structure.

(4) The CIC shall sign as the SS on DA Form 3502-R. A reproducible copy of this form is at the back of this manual.

h. Control Tower Operator and ATC Specialist Examiners.

(1) Military or civilian CTO and ATCS examiners shall be designated per AR 95-2, FAA Order 7220.1, and this manual. AR 95-2 explains how to request examiner designations. The facility-rated controllers meeting the requirements of AR 95-2 may be designated as examiners.

(2) Examiners shall administer CTO and ATCS facility rating tests per FAR, Part 65; FAA Orders 7220.1 and 8080.1; and this manual. They conduct the tests properly and complete, maintain, and submit the related forms and records per procedures in FAA Orders 7220.1 and 8080.1. CTO and ATCS examiners--

- Maintain test security.
- Develop and maintain the facility rating tests.

- Make sure applicants meet eligibility requirements.
- Issue temporary CTO certificates and sign ATCS certificates.
- Administer all prescribed written and practical tests for a facility rating.
- Maintain a record of ratings issued (by name, date, and type) and retain this record in facility files.
- Complete and submit the necessary certification of forms per FAA Orders 7220.1 and 8080.1 and AR 95-2.
- Report any testing or certification irregularities or problems, as appropriate, to the ATC facility chief, regional FAA office, or examiner.

i. ATC Maintenance Chief. The ATC maintenance chief is responsible for all ATC equipment maintenance. His duties include, but are not limited to, the following:

- Coordinates maintenance-related issues, such as LOA, on-call rosters, and NAVAID scheduled maintenance with the ATC chief or platoon sergeant.
- Ensures that maintenance facilities are maintained per applicable military and FAA publications and standards.
- Ensures the qualifications of maintenance personnel.
- Coordinates ATC equipment maintenance with support and supported units.
- Establishes a maintenance training program and an on-the-job training program for the local facility.
- Coordinates facility configuration changes with the ATC chief or platoon sergeant and higher headquarters.
- Maintains “as built" diagrams and drawings for ATC facilities and equipment.

2-2. CONTROL POSITIONS AND RESPONSIBILITIES

a. Shift Supervisor. The SS is responsible for efficiently operating the ATC facility during his tour of duty.

b. Local Control. The LC issues information and clearance for properly separating and sequencing aircraft under his control.

c. Ground Control. The GC issues information and instructions for the orderly movement of traffic (aircraft, vehicles, pedestrians) on the movement area.

d. Flight Data. The FD receives, posts, and relays flight data clearances and messages and assists in facility operations as directed.

e. Coordinator. The CI coordinates the flow of air traffic between other positions or facilities as required.

f. Clearance Delivery. The CD delivers clearances to departing aircraft. The function of the CD is separate from that of the GC or FD.

g. Flight Following. The FF issues information and advisories to arriving, departing, and en route aircraft and monitors the flight progress of aircraft. The FF also receives, posts, and relays progress reports and posts information to flight data strips, boards, charts, and tactical situation maps.

h. Departure Control. Applying radar or nonradar standards, the DC expedites the movement of departing aircraft. The DC provides separation between successive departures and between departing and arriving aircraft.

i. Arrival Control. Applying radar or nonradar standards, the AC expedites the movement of arriving aircraft. The AC provides separation between successive arrivals and between arriving and departing aircraft.

j. Approach Control. Applying radar or nonradar standards, the AP provides for the separation and sequencing of IFR aircraft operating within a designated area of jurisdiction.

k. Airport Surveillance Radar. The ASR provides for the radar sequencing and separation of aircraft being vectored to intercept the final approach courses for handoff to PAR or for the conduct of a surveillance approach.

l. Precision Approach Radar. The PAR issues instructions to the pilot based on the position of the aircraft relative to the final approach course, glide path, and distance from touchdown. The PAR also monitors certain nonradar instrument approaches.

NOTE: The ATC chief/ATC facility chief may add positions based on local requirements.

2-3. OPERATING INITIALS

The ATC chief/ATC facility chief shall assign the controllers individual, two-letter operating initials. The chief shall maintain a list of operating initials for all assigned controllers. Except where signatures are required, controllers shall use the assigned operating initials on all interphone systems and facility forms and records.

2-4. FACILITY CURRENCY

Air traffic controllers shall remain current per AR 95-2.

2-5. NON-ATC DUTY PERFORMANCE

a. When planning normal work periods and shift schedules, supervisors must consider the time that air traffic controllers devote to other military duties. Temporarily assigning controllers to duties outside their MOS can adversely affect both flight safety and professional development. Supervisors must retain the expertise necessary for safe control of air traffic. Therefore, supervisors shall restrict the use of ATC personnel outside their MOS to essential military duties.

b. When working outside their MOS, ATC personnel shall make an entry in the Remarks section of DA Form 3479-6-R. A reproducible copy of this form is at the back of this manual.

2-6. NONCONTROLLER PERSONNEL IN ATC FACILITIES

The ATC chief/ATC facility chief shall keep to a minimum the number of noncontrolled personnel in an ATC facility. The chief shall be the final authority on the admittance of noncontrolled personnel to the facility and the number permitted at any one time. (In the chief's absence, the SS or CIC will assume this responsibility).

2-7. SPECIAL MEDICAL CONSIDERATIONS

If a controller is receiving a substance or medical procedure that is likely to provoke an adverse systemic reaction, the supervisor shall restrict the individual from ATC duties. The controller will not resume ATC duties until a flight surgeon declares him fit. If a supervisor determines that a controller's physical or mental health is questionable, he shall relieve the controller of ATC duties. The supervisor shall refer the controller to a military flight surgeon for an evaluation and a ruling. AR 40-8 addresses the factors to consider and the appropriate medical restrictions to ATC duty.

2-8. TIME STANDARDS

All ATC facilities shall use Coordinated Universal Time in all operational activities. Local time shall be used for facility duty schedules, daily traffic counts, and other administrative forms and correspondence.

2-9. HOURS OF OPERATION

a. The installation commander establishes an ATC facility's hours of operation. Facilities that operate less than 24 hours per day, 7 days per week shall establish procedures for opening and closing. They shall coordinate these procedures with airfield operations or the ATC facility having IFR jurisdiction. These procedures shall also be included in an LOA or operations letter. When part-time facilities open or close, they shall broadcast the service they are resuming or terminating.

b. If airfield operations continues to function when the ATC facility is closed, these organizations shall exchange pertinent flight data before the facility opens or closes. The facility shall publish its hours of operation in the appropriate FLIPs.

2-10. MAXIMUM HOURS OF DUTY

a. Fixed Facilities. Except in an emergency, the shift, workweek, and rest periods are as stated below.

(1) Shift.

(a) An 8-hour shift is standard.

(b) A controller will not serve or be required to serve more than 10 consecutive hours.

(2) Workweek.

(a) A 40-hour workweek is standard.

(b) An up-to-50-hour workweek may be authorized for a period not to exceed 60 days.

(3) Rest periods.

(a) A 15-minute rest period is required after every 4 hours of continuous work if the traffic density and facility operations permit.

(b) An 8-hour rest period is required between shifts.

(c) A 24-consecutive-hour rest period shall be provided during each 7-consecutive-day period.

NOTE: Controllers shall not be scheduled for any other military duties, other than normal housekeeping duties, during these rest periods.

b. Tactical Facilities. Except in an emergency, the shift and rest periods are as stated below.

(1) Shift.

(a) A 12-hour shift is standard.

(b) A 16-hour shift is maximum.

(2) Rest periods. An 8-consecutive-hour rest period shall be provided before each shift.

2-11. MINIMUM SHIFT REQUIREMENTS FOR FIXED FACILITIES

a. Shift duty and actual shift manning will normally provide a qualified controller for each operating position in the facility. This does not preclude reducing the actual shift manning to the minimum stated in b below when flying activities are less than normal such as on holidays and weekends. The minimum manning level for tactical ATC facilities shall be established by the ATC battalion commander.

b. The ATC chief/ATC facility chief may permit consolidation of operating positions and approve the performance of more than one function by a rated or PQ controller. No less than two controllers shall be present for duty in the control tower, approach control tower (nonradar), GCA, FOC/FCC, AFFS, and ARAC. One of them shall be facility-rated and the other one position-qualified in at least one position.

c. Jointly operated facilities, such as an AFFS and ARAC, need not meet the shift requirements of both facilities. However, the controllers must be cross-trained and, as a minimum, position-qualified in an operational position of the other facility; for example, when the AFFS is located within the ARAC. Only two controllers are required to be on duty. The AFFS facility-rated controller must be position-qualified at an ARAC position, and the ARAC facility-rated controller must be position-qualified at an AFFS position.

2-12. POSITION CONSOLIDATION

Personnel are assigned to positions according to the functions of the activity, equipment, and facility. Positions may be combined based on the activity and personnel qualifications. A facility memorandum must identify those positions that must not be combined with another.

2-13. POSITION ASSIGNMENTS

Only ATC personnel who are qualified to perform the duties as outlined in this manual shall man the positions. Controllers shall be assigned to positions as required by traffic, equipment, and individual qualifications.

a. Without direct supervision, PQ controllers shall not be assigned to positions in which they are not qualified. In addition, PQ controllers shall not be assigned to more than one position at a time unless they are qualified at both positions.

b. Facility-rated controllers providing direct one-on-one supervision of a trainee or noncurrent rated controller are directly responsible for operating the position. During the facility-rating examinations, the examiner may assume position responsibility if he is facility-rated and current at the facility. Noncurrent, facility-rated controllers shall not be assigned to a position unless given direct one-on-one supervision.

c. At the discretion of the SS, non-PQ trainees may conduct precision or surveillance approaches during IFR conditions under certain circumstances. They may conduct these approaches if--

- Direct one-on-one supervision is maintained.
- Direct communications override is available at the position of operation.
- Weather conditions are acceptable (not less than a 500-foot ceiling or l-mile visibility).

2-14. POSITION RESPONSIBILITY TRANSFER

a. Position responsibility shall be transferred according to FAA Handbook 7110.65 and appropriate facility directives. All controllers, including supervisors, shall know how to perform the

duties of any position to which they may be assigned before they assume the responsibility. Each controller shall also--

- Read the recent information file, DA Form 3502-R, and any other operational data that the ATC chief/ATC facility chief, SS, or CIC may specify.
- Obtain a briefing on communications, traffic and airfield conditions, equipment outages, and current and forecast weather.
- Accept responsibility for the position only after ensuring that the briefing is complete and that all questions about the operation of the position have been resolved.

b. The relieving controller and the controller being relieved shall share equal responsibility for the completeness and accuracy of the position-relief briefing. The ATC chief/ATC facility chief shall provide a tailored checklist of the equipment and conditions that will likely be a factor at each position during relief periods.

2-15. DUTY RELEASES

A facility memorandum must outline the procedures for releasing controllers from scheduled duty. DA Form 3502-R is used to document absences that are not explained on the duty schedule.

2-16. EMERGENCY MANNING LEVELS

a. Fixed-base ATC facility chiefs shall formulate proposed EMLs for ATC facilities. After validation by the MACOM, EMLs shall be forwarded through channels to Commander, USAAVNC, ATTN: ATZQ-ATC-MO, Fort Rucker, AL 36362-5265.

b. EMLs shall be based on the minimum number of qualified personnel required to provide services for the hours of operation necessary to support the primary mission. It is also based on--

- A 48-hour workweek per controller.
- The exclusion of nonqualified controllers.
- Combined positions of operation wherever practicable.

c. The following formula is used to determine EMLs: Daily hours operational X number of operational positions X number of days operational each week divided by maximum hours a controller can work in one week (48 hours) = EML. For example, 16 X 2 X 5 = 160 divided by 48 = 3.3. (For EML purposes, the value is rounded up to the next whole number.) In this case, the EML is 4.

d. After the EML of the ATC facility has been validated, the post, camp, or station commander will be advised in writing of the EML of his facilities. Every effort will be made to anticipate emergency manning levels. The USAAVNC Commander (address in a above) and the post, camp, or station commander will be advised through channels as far in advance as possible that a facility is anticipated to be at or below the EML.

e. ATC facilities may be operated at EMLs for a period not to exceed 60 days. If assigned and attached rated and PQ controller strength does not increase during this period, services or hours of operation must be reduced. Anytime the rated and qualified controller strength falls below the EML, services or hours of operation shall be curtailed immediately. The reduction in services or hours of operation shall remain in effect until the EML is attained.

f. Notification that services or hours of operation have been curtailed is sent by an electrically transmitted message through command channels to Commander, USAAVNC, ATTN: ATZQ-ATC-MO, Fort Rucker, AL 36362-5265. Figure 2-1 shows the format for an EML report.

Title: EML Report.

Facility and location:

Services and hours of operation to be curtailed if the EML extends beyond the 60-day period:

Expected implementation date of the curtailment:

Specific reasons for the proposed curtailment:

Services remaining and the proposed hours of operation:

Estimated date that normal services and hours of operation should resume:

Action implemented or planned:

Figure 2-1. Message format for an EML report

g. If corrective action cannot be taken in time to avoid the curtailment, the post, camp, or station commander shall be notified of the anticipated reduction in ATC hours of operation or services. On the date the curtailment is effective and again on

the date normal operations resume, a supplemental report shall be submitted through channels to Commander, USAAVNC, ATTN: ATZQ-ATC-MO, Fort Rucker, AL 36362-5265.

2-17. CONTROL AND COORDINATION *OF* AIRFIELD/HELIPORT AREAS

The ATC chief/ATC facility chief shall coordinate closely with airfield management to establish procedures for ensuring the most efficient use of runways. They also must ensure positive control and coordination of personnel, ground vehicles, and aircraft on or near taxiways, runways, and landing areas. Personnel in or near these areas shall maintain two-way radio communications with the control tower to the maximum extent possible and shall be familiar with tower light gun signals.

2-18. AIRPORT ADVISORY SERVICE

An airport advisory service is sometimes provided at locations without an operational control tower. At such locations providing this service, a common traffic advisory frequency shall be designated for carrying out airport advisories. This service does not require an air traffic controller. FAA Handbook 7110.10 contains additional information about the airport advisory service.

2-19. MAINTENANCE PERSONNEL

a. Qualified ATC maintenance personnel shall be scheduled for duty during normal duty hours, Monday through Friday. However, such factors as equipment outages, maintenance schedules, and the number of assigned personnel may require the scheduling of maintenance personnel at times other than during normal duty hours.

b. The ATC chief/ATC facility chief shall coordinate with maintenance personnel to develop written procedures for recalling ATC maintenance personnel if ATC or NAVAID equipment fails. These procedures shall outline who (by name) must respond, what types of failures require a recall, and who (for example, facility chief or SS) is responsible for initiating the recall.

NOTE: ATC equipment with backup systems or NAVAIDS that do not provide the only means of an IFR approach to the active runway normally would not require a recall of maintenance personnel. However, factors to consider are the amount of time before maintenance personnel arrive for scheduled duty, current and forecast weather conditions, and aircraft traffic.

c. The facility or unit SOP shall include the procedures outlined in a and b above. Rosters of on-call personnel shall be readily available to controllers and maintenance personnel.

2-20. COUNTERDRUG OPERATIONS

Air traffic control elements may be employed as part of the counterdrug task force to increase the safety of all aviation operations. They can enhance command and control through flight-following and search and rescue support. They can also deploy navigational beacons in remote areas and provide reliable IMC services. In addition, ATC units can cooperate with other federal agencies and military components involved in counterdrug activity. They can intercept suspected drug trafficking flights and provide terminal guidance for friendly counterdrug agency air assets. ATC responsibilities in the areas of airspace management and communications during counterdrug operations are given below.

a. Airspace Management. Aircraft involved in counterdrug operations must comply with FAA regulations to ensure the safety and protection of life and property. Facilities must request an exemption for any variation from FAA regulations. Planning cells should establish liaisons with other DOD agencies, law enforcement aviation, and the FAA.

b. Communications. Secure communications are essential to operational security. When contacting ATC elements, counterdrug aviation will use FAA-established coded call signs which can be obtained through the joint task force. Before operations begin, communication procedures should be outlined in an LOA to ensure that military, ATC, and law enforcement agencies can communicate clearly without compromising the mission.

Section II. Weather and Emergency Requirements

Regardless of the value of the latest official weather observation, controllers must advise arriving and departing aircraft of current weather information and visual observations. They also must inform local weather personnel of each in-flight emergency or aircraft mishap. This section explains the requirements and procedures for providing these services.

2-21. COOPERATIVE WEATHER WATCH

The cooperative weather watch is an observation program in which air traffic controllers and other nonweather personnel assist in monitoring weather conditions. The LOA between ATC agencies and the appropriate AWS must include local watch requirements and procedures. Tower controllers shall maintain a cooperative weather watch at all times per AWSR 50-10.

2-22. TOWER VISIBILITY OBSERVATIONS

a. Although TVOs are "limited," they are no less important than the record, record-special, special, and local observations that weather personnel take. The accuracy and timeliness of TVOS are critical to the safety and efficiency of aircraft operations and to the protection of military resources.

(1) TVOs are advisories unless weather station personnel verify them or unless the individuals taking the observations have been certified to make official weather reports. This information may include thunderstorm location and movement and rapidly deteriorating visibility. Tower controllers must also advise terminal radar facilities of any observed phenomena not in the current weather report.

(2) Tower controllers must relay TVOs to weather station personnel to support the cooperative weather watch program. This requirement is particularly important during severe weather and when conditions observed by nonweather personnel (ATC) and those reported in the current weather observation are different. The local situation and weather observation site location influence how the weather station reports or relays information. The station will issue a new observation or include reports of differing conditions, such as RVR and prevailing visibility, in an official weather observation (R, RS, S, or L). The local weather unit and the organizations to which certified nonweather personnel are assigned will establish the criteria and procedures for weather reporting. ATC facility chiefs should contact the nearest weather station to review AWSR 50-10 and other regulations concerning weather observation and reporting and personnel training.

b. Tower facilities shall perform TVOS at the request of the local weather station or airfield commander. Facilities that perform TVOs shall develop an LOA between the ATC facility and the weather station. The LOA shall state the weather elements to be reported, responsibilities, and coordination procedures unless this information is in an existing regulation. Air Force weather stations, for example, normally publish these requirements in regulations or supplements.

c. All tower controllers are required to become certified before they start position qualification training. They shall renew their certification annually at each facility. The results of initial and annual certification shall be entered on DA Form 3479-R. A reproducible copy of this form is at the back of this manual.

d. Local weather service authorities will provide a practical training program to certify air traffic controllers as limited weather observers. If no servicing weather station exists, the requesting agency shall make sure LWO training is provided. Controllers shall perform weather observations as a secondary function; their primary function is ATC.

2-23. DENSITY ALTITUDE ADVISORY BROADCAST

When the temperature reaches a certain level, ATC facilities at Army airfields and heliports with field elevations of 2,000 feet MSL or above shall broadcast a density altitude advisory to departing and arriving aircraft. Table 2-1 shows the temperatures and elevations at which the advisory will be broadcast.

Table 2-1. Data relative to density altitude advisory broadcast

Field Elevation (ft MSL)	Temperature (°F)
2,000 to 2,999	85 and higher
3,000 to 3,999	80 and higher
4,000 to 4,999	75 and higher
5,000 to 5,999	70 and higher
6,000 to 6,999	65 and higher
7,000 to 7,999	60 and higher

2-24. WEATHER OBSERVATION RELAY

Observers shall relay weather observations to the tower via television, autowriters, teletypewriters, or other similar systems. Controllers shall post observations received by telephone on notepads or on the reverse side of flight strips. Observers and controllers will use the standard weather symbols and abbreviations.

2-25. WEATHER DATA RETENTION

Controllers do not need to retain weather data received over recorded voice lines, television, teletypewriters, and teleautograph. However, they shall retain, with the DA Form 3502-R, weather data received over unrecorded voice lines and data copied on notepaper. Both the observer and the controller shall record their initials on each observation they receive.

2-26. VISIBILITY CHECKPOINT CHARTS

All control tower facility chiefs shall prepare visibility checkpoint charts as outlined in Chapter 4. They will use these charts to report tower visibility and to observe changes in the reported visibility. When the official report and the tower observation differ, the tower shall report the tower visibility to the weather station and the terminal radar facility. Tower visibility may include the entire airport traffic area or any portion of the area. For example, "Tower visibility is 2 1/2 miles" or "Tower visibility to the south is 1/2 mile." When tower visibility is less than 4 miles and differs from the reported values, it should be included in the Remarks section of an official weather observation. Tower visibility shall also be transmitted to all arriving and departing aircraft if it is not included in a current ATIS broadcast.

2-27. AIRFIELD WEATHER STATUS

The airfield weather status (IFR or VFR) shall be posted to DA Form 3502-R when daily operations begin. As it changes during the day, the status is again posted to the form.

2-28. AIRCRAFT ACCIDENTS AND INCIDENTS

Components of the Army ATC system become involved in an aircraft accident or incident in various ways. The involvement may result from--

- Irregularities or deviations from established procedures by pilots. These situations require special handling by controllers and result in the delay or resequencing of other aircraft.

- Operational errors involving equipment failure, personnel, procedures, or system components. These errors, either individually or in combination, result in deviations from established ATC standards.

- Near collisions reported by the pilot of an aircraft involved in the incident.

When a facility, service, or NAVAID is suspected to have been involved in an aircraft accident or incident, ATS must act immediately. ATC shall provide continuing safe, orderly, and expeditious movement of all air traffic operating under the jurisdiction of the ATC facility. In addition, ATC shall obtain accurate and complete information on which to base a detailed

investigation. The responsibilities following an aircraft accident or incident are outlined below.

a. The SS shall--

(1) Notify the ATC/facility chief and other designated personnel of the accident or incident.

(2) Request a local weather observation unless there has been an intervening record or record-special observation.

(3) Record all appropriate details, including the local weather observation, on DA Form 3502-R.

(4) Mark and safeguard the recording tapes that are or may be pertinent to the accident and handle them according to Chapter 3 of this publication. In case of an incident, such as an emergency or a complaint about ATC services that does not result in an accident, removal of recorder tapes before the normal rotation time is unnecessary.

NOTE: It is extremely important that ATC personnel immediately inform the local weather personnel of each in-flight emergency or aircraft mishap. When notified of an in-flight emergency, the weather station is required to intensify the weather watch to ensure that the aircraft in distress receives the maximum weather support. ATC personnel must notify the weather station of an aircraft mishap immediately. Thus they can take the official weather observation and annotate the recording instruments as closely as possible to the actual time of the accident.

b. As soon as possible after notification of an accident or incident, the ATC chief/ATC facility chief, training supervisor, SS, or CIC shall--

(1) Relieve the controller for physical and psychological evaluation by the local medical officer or flight surgeon if there is any indication that the controller contributed to the accident or incident. The controller shall obtain a clearance from the local medical officer or flight surgeon before returning to duty.

(2) Obtain a written statement about the incident or accident from all controllers and supervisory personnel involved. Written or taped records pertaining to an aircraft accident shall be retained for a minimum of six months. Written or taped records pertaining to an aircraft incident shall be retained for a minimum of 30 days.

(3) Examine the condition of the equipment, along with technically qualified maintenance personnel, to determine whether it could have contributed to the accident or incident.

2-29. ACCIDENTS OR INCIDENTS INVOLVING RADAR FACILITIES

When an accident or incident involves or is suspected to have involved radar equipment, the facility shall discontinue radar service until a flight check is performed. An exception to this policy would be during IFR conditions when aircraft can neither land using other NAVAIDs nor proceed to an alternate landing area. In this situation, the facility shall not terminate radar service if the pilot has been informed about the radar equipment and concurs in its use.

2-30. INFORMATION RELEASE

Information pertaining to an aircraft accident, incident, or violation of any kind shall be made available only to official DOD personnel. The airfield commander and ATC chief/ATC facility chief are responsible for compiling and releasing this information. The names of personnel involved will be treated as restricted information. Their names will not be released to the public or any agency outside of DOD except by proper authority. Requesters of this information should be referred to Director, US Army Aeronautical Services Agency, ATTN: MOAS-ZA, Cameron Station, VA 22304-5050. No controller shall give interviews, make statements, or release any written or recorded information to news agencies or unauthorized personnel or organizations without consulting the ATC chief/ATC facility chief.

2-31. NOTICES TO AIRMEN

ATC facilities are responsible for notifying the designated facility or office of any equipment outage, service curtailment, or airfield activity that may require a NOTAM.

2-32. COMMUNICATIONS PROCEDURES

The SS on duty is responsible for all communications emanating from the facility. The ATC chief/ATC facility chief shall ensure that periodic checks are made to detect and prevent superfluous or unauthorized transmissions.

a. The SS takes action to detect and prevent radio or telephone transmission of false or deceptive communications and obscene, indecent, or profane language. The SS is also responsible for detecting unauthorized or unassigned identifications and preventing willful or malicious interference with other communications.

b. In addition to normal ATC transmissions, the facility may need to transmit third-party messages about the safety of aircraft operations or the preservation of life or property. Such transmissions are authorized on ATC radio communications channels; however, they shall be recorded on DA Form 3502-R. Controller personnel or persons concerned with the emergency may handle these transmissions. Noncontrolled personnel may be given access to ATC facilities if control instructions are not issued and their transmissions can be interrupted to continue ATC services.

c. ATC facilities may relay non-ATC instructions only when no other source of communication is available and the transmissions will not interfere with ATC instructions. When it appears that such broadcasts may affect the control of air traffic, ATC personnel shall immediately notify the ATC chief/ATC facility chief.

CHAPTER 3

FACILITY EQUIPMENT

The equipment requirements for an Army ATC facility will depend on whether the facility is fixed or tactical. TB 95-1 contains the basic operating equipment and suggested equipment layouts for fixed facilities. Equipment and equipment layouts for tactical facilities are described in the appropriate technical manuals.

3-1. EQUIPMENT LAYOUTS

The ATC chief/ATC facility chief may recommend changes to the equipment layout of his facility. However, the chief must submit the request for approval of a change, a modification, or an alteration to ATC equipment through command channels to the USAATCA, ATTN: ATZQ-ATC-DR (Configuration Management Officer), Fort Rucker, AL 36362-5265. TB 95-1 contains the procedures for submitting recommendations for changes to the ATC equipment layout.

3-2. EQUIPMENT CHECKS

a. The ATC chief/ATC facility chief shall establish a list of equipment checks to be completed at the beginning of each day; for example, FSC-92, radio, light gun, TRI, and ATIS checks. DA Form 3502-R shall be used to record the results of equipment checks. Tape recorders may be included in the equipment checklist. However, they also require additional checks, as shown in paragraph 3-14d. If all equipment is operational, the entry on the form may be limited to "Checklist complete." If outages occur, the entry must identify them; for example, "Checklist complete; TRI and 126.2R OTS." The checklist may be a separate form, or it may be printed on the back of DA Form 3502-R. A DA Form 2404 will be filled out daily; outages will be recorded per DA Pamphlet 738-750, paragraph 3-4. A COPY of DA Form 2404 will be forwarded to the maintenance supervisor; the original copy will stay with the equipment until the equipment is restored to operational status.

b. If an operational check of the primary crash alarm system or emergency frequencies cannot be conducted when a facility begins operation, these systems shall not be included as items on the equipment checklist. However, they shall be checked at least once a day and the results entered on DA Form 3502-R. Chapter 5 describes the additional equipment checks and requirements.

c. On DA Form 3502-R, a capital E shall be placed in the TIME (UTC) column to the left of entries showing equipment out-of-service time and return-to-service time. Examples of these entries are "E 0800, checklist complete, 126.2T OTS-JO" and "E 0810, 126.2T RTS-JO."

3-3. FACILITY MAINTENANCE

a. The maintenance supervisor at each facility or unit shall ensure that personnel schedule services, inspections and repairs of ATC equipment per DA Pamphlet 738-750 and AR 750-1. They shall coordinate the scheduling with the ATC chief/ATC facility chief.

b. Maintenance on a NAVAID that services two or more airfields or is part of the NAS must be coordinated with the ARTCC and other facilities affected. The maintenance chief/ATC chief shall ensure that qualified maintenance personnel are available to perform any phase of the cursor alignment or adjustment requiring the use of test, measurement, and diagnostic equipment.

c. The ATC chief/ATC facility chief shall ensure that every controller is trained to perform operator-level and crew-level unit maintenance on each equipment system or subsystem. Controllers shall use the appropriate technical or commercial manual to perform this maintenance.

d. Maintenance supervisors at each facility or unit shall ensure that newly assigned maintenance personnel are certified as ATC maintenance technicians. The technicians must be certified according to the maintenance certification program, which is explained in Appendix F.

NOTE: Facilities using the AN/FSC-92(V) console shall develop and implement a program to train ATC operators to reboot the system. This procedure shall be incorporated into the facility training program and annotated on the controllers' DA Forms 3479-R.

3-4. FACILITY GROUND INSPECTION, CERTIFICATION, AND RECERTIFICATION PROCEDURES

a. **Ground Inspection.** A facility ground inspection is conducted to determine if the facility is operating within, and can be expected to continue operating within, performance tolerances. It consists of collecting and recording performance data, inspecting the physical condition of the facility, and reviewing the quality of maintenance procedures. (See Appendix E.)

b. Certification. When a facility is initially commissioned for use in the National Airspace System, the maintenance chief shall complete a formal certificate for facility certification. He will forward the certificate (Figure 3-1) to the appropriate FAA office.

c. Recertification. Facility recertification is conducted the same as initial certification except that the maintenance chief does not need to send a formal certificate to the FAA. Recertification shall be accomplished at the intervals specified in TM 95-225.

ATC FACILITY CERTIFICATION

The undersigned hereby attests that _(name of ATC facility)_ meets the applicable performance standards and tolerances in the pertinent technical manuals. Should this facility subsequently fail to meet applicable ground or flight inspection criteria, the maintenance chief agrees to issue a NOTAM through _(name of FAA facility)_. In the latter event and if conflict with other IFR traffic could result, it is understood that continued use of the facility for military IFR operations will be disapproved by the FAA.

Signature_____

Name_____

Title_____

Date_____

Figure 3-1. Certificate for initial facility certification

3-5. AUTOMATIC TERMINAL INFORMATION SERVICE

ATIS provides advance operational and meteorological information for terminal areas and noncontrol airports using a controller-prepared tape recording. This information is repetitively broadcast on a voice outlet for aircraft arriving or departing an airport or operating within the terminal area. FAA Handbooks 7110.65 and 7210.3 contain further guidance on ATIS.

3-6. CLOCKS

A reliable clock shall be visible from each operating position in all ATC facilities. Clocks shall be checked at the beginning of each day, and the results of time checks shall be logged on DA Form 3502-R. Clocks in approach-control facilities are set to agree with those of the servicing en route facility. All other facility clocks are set to agree with the servicing approach control. Some ATC facilities are not serviced by an en route or approach control facility. When time checks with such facilities are not practical, clock settings shall agree with the time signals received by radio from a US government or friendly foreign government source. In a tactical environment, ATC facilities shall obtain a time check from the next higher control facility.

3-7. LIGHT GUNS

ATC light gun color codes and meanings shall be attached to the back or side of the light guns. Except when they are in actual use, ATC light guns shall be adjusted to provide a red light when the switch is activated.

3-8. CRASH ALARM SYSTEM

a. Crash telephone and radio receiver/transmitter keys should be centrally located so that they are readily available to all control positions. AR 385-95 prescribes the policies, procedures, and guidelines regarding the primary crash alarm system, secondary crash alarm circuit, and local crash grid maps.

b. Because of the many types of facilities and equipment, a facility chief cannot mandate fixed procedures that would suit every facility. Therefore, he establishes procedures that define the responsibility of each position during an emergency. These procedures shall be published in the FTM.

3-9. RADAR/NAVAID EMERGENCY WARNING AND EVACUATION SYSTEM

Radar/NAVAID facilities close to runways shall be equipped with an emergency warning and evacuation system to alert personnel working around or in these facilities to emergency situations. This system should consist of an aural or a visual alarm or a combination of the two. One or more of the ATC facilities shall be able to activate the alarm at all times. The ATC chief and maintenance chief shall establish evacuation procedures.

3-10. DIGITAL BRIGHT RADAR INDICATOR TOWER EQUIPMENT

a. Some towers are combined with full radar approach control facilities, and the controllers rotate between the tower and

approach control. Under these conditions, local controllers may use certified DBRITE displays for the terminal radar function if they can satisfy the FAA air traffic requirements regarding aircraft operating on runways or in the ATA. The conditions and limitations for DBRITE usage shall be specified in an LOA or operations letter.

b. Other towers are combined with full radar approach control facilities, but the controllers do not rotate between the approach control and the tower. Under these conditions, local controllers may use certified DBRITE displays to--

- Identify aircraft and their exact location or spatial relationship to other aircraft. (This authority does not alter the visual separation procedures outlined in FAA Handbook 7110.65.)
- Provide radar traffic advisories to aircraft.
- Provide directions or suggested headings to VFR aircraft as a radar identification method or as an advisory navigational aid.
- Provide information and instructions to aircraft operating in the ATA.

c. When the conditions in b above and those listed below are present, local controllers may also use certified DBRITE displays to ensure separation between successive departures, arrivals, and overflights within the ATA. The additional conditions are if--

- The tower has no delegated airspace.
- Radar separation procedures do not require the tower to provide radar vectors.
- Local controllers have radar training and certification or qualification commensurate with their radar duties.
- An LOA with the IFR facility was submitted to the DARR and approved by the FAA Regional Air Traffic Division.

  NOTE: The LOA must authorize the specific function and prescribe the procedures to be used. It must also prescribe the process for a transition to nonradar procedures or the suspension of separation authority in the event of a radar outage.

- The procedures for giving and receiving radar handoffs or pointouts do not impair the local controller's ability to satisfy FAA and Army ATC requirements regarding aircraft operation on runways or within the ATA.

d. When the tower facility is delegated the responsibility for providing the services outlined in a through c above, the facility currently providing the approach control services shall prepare a staff study. This study shall outline operational improvements, savings (or additional costs), and the number of additional personnel required. The study shall be forwarded through channels to the DARR for coordination with and approval by the FAA. An information copy of the study will be forwarded through channels to Commander, USAAVNC, ATTN: ATZQ-ATC-MO, Fort Rucker, AL 36362-5265.

e. In flight-following facilities, DBRITE will provide traffic advisories and VFR radar services.

f. The DBRITE is IFR-certifiable; at select GCA locations, it will serve as the surveillance radar.

3-11. TELEPHONE LINES

a. Where possible, all noncommercial telephone lines to fixed-base ATC facilities shall terminate in the communications console key system installed in the facility. Commercial telephones should be provided on separate instruments. Where this is not possible and commercial telephones are recorded, a beeper tone is required.

b. Direct telephone lines are authorized between ATC facilities and command posts. Their use shall be restricted to the relay of essential command and control instructions and advisories. Calls on direct telephone lines are handled secondarily to the primary function of ATC services. The lines should not be used to relay information, such as departure or arrival times and load messages, that can be handled by other means. If either a command post or an ATC facility requires immediate priority over the other, it shall on initial contact state, "Stand by for emergency instructions." These occurrences shall be entered on DA Form 3502-R.

c. Direct telephone lines are authorized between adjacent ATC facilities and area ATC centers. Such elements as the fire station, crash and rescue team, flight operations, weather station, military police, and hospital are also authorized direct telephone lines.

3-12. RADIO EQUIPMENT

a. ATC facilities are authorized radio transmitters and receivers per TB 95-1. ATC facilities are also authorized to join radio nets with the crash and rescue team, airfield services, weather station, fire station, ambulance service, and security agency. To the extent possible, these radios will terminate within the communications console.

b. During the hours of operation, ATC facilities shall continuously monitor all assigned radio frequencies. Facilities that share radios shall establish procedures to ensure that one of the facilities continuously monitors these frequencies.

c. All ATC facilities should have a transmit-receive capability on emergency frequencies 121.5 MHz and 243.0 MHz. When ATC facilities are close, they shall share transmitters and receivers if services will not be degraded. If transmitters and receivers are shared, geographical area coverage shall not be reduced. In addition, transmitters will be equipped with lockout devices to avoid inadvertent interference between facilities.

d. The two emergency channels shall not be terminated on the same transmit-receive key selector of any other frequency. Where a remote communications console is provided to a non-ATC facility at an airfield that has an ATC facility, only the emergency receiver shall be provided. ATC facilities without an emergency frequency capability shall have appropriate telephone lines for relaying emergency information.

e. As a minimum, two-way transmitter and receiver checks shall be conducted daily on all radio frequencies. These checks shall also be conducted following tape recorder and other equipment repairs and normal preventive maintenance.

3-13. SEARCH AND RESCUE SATELLITE

The search and rescue satellite is a system of international satellites used for monitoring emergency frequencies 121.5 MHz and 243.0 MHz. Any transmission over 30 seconds long on these frequencies causes an international search and rescue satellite to activate the SARSAT ground-processing center. This puts rescue operations into action. Unintentional keying of these frequencies has caused a number of false alarms. Maintenance checks of these frequencies shall be keyed into dummy loads. The operational checks shall not exceed 20 seconds.

3-14. RECORDERS

Fixed-base ATC facilities are required to have recorders and shall record all ATC communications by position. In addition, the facilities shall share recorders when feasible. Each recorder shall be provided a time source, and a separate channel shall be assigned for that time source. When a facility cannot comply with these requirements, the facility chief shall send notification through channels to Commander, USAAVNC, ATTN: ATZQ-ATC-MO, Fort Rucker, AL 36362-5265.

a. Position-Recording Channels. Except as shown in b below, the facility shall record relative to position rather than frequency. Recording channels shall be assigned to positions in the following order:

(1) Precision approach radar.

(2) Arrival control.

(3) Approach control.

(4) Departure control.

(5) Local control.

(6) Flight data (tower).

(7) Flight-following control.

(8) Clearance delivery.

(9) Ground control.

(10) Flight data (radar).

(11) Flight-following data.

(12) Coordinator.

(13) Supervisor.

(14) ATIS.

NOTE: When a channel is not available to record on the ATIS, the message will be recorded once at an operating position.

b. Radio Transmit-Receive Frequencies. After requirements in a above are met, the remaining spare channels may be used for channel clearing and for recording the primary radio transmit-receive frequencies. The frequencies are recorded in the following order:

(1) VHF and UHF emergency.

(2) Primary crash net.

(3) Approach control (radar or nonradar).

(4) Departure control.

(5) Local control.

(6) Ground control.

(7) Pilot to metro service.

c. Newly Established Positions. When a facility implements additional operating positions, recorder channels assigned to functions in b above shall be released in reverse priority to record these new positions. The desirability of recording individual frequencies shall not justify acquiring additional recorders to record by frequency. Instead, unused recorder channels should be assigned to the applicable functions. When a facility is equipped with more than one recorder, the ATC chief/ATC facility chief shall determine which one to use in recording the above listed frequencies, positions, and services. The chief also determines the priority in which they are recorded or released.

d. Recorder Checks and Tape Changes. The ATC personnel shall check the recorders and change the tapes if the recorders are convenient to operating areas. If the recorders are not convenient to operating areas, the ATC chief/ATC facility chief and the responsible maintenance chief shall develop an agreement assigning this responsibility. The ATC chief/ATC facility chief shall ensure that controllers are properly trained to check the recorders and change the tapes.

(1) The controllers monitor the quality of recordings. At the beginning of each shift, the SS or CIC shall ensure that all recording channels are operating properly and producing clear, audible recordings.

(2) The ATC chief/ATC facility chief and the maintenance chief shall establish procedures to ensure that the audio level and recording quality are checked after all radio, recorder, or

telephone equipment maintenance. These checks shall be noted on DA Form 3502-R. At dual facilities, the ATC chief may appoint one facility to make all tape changes and recorder checks. However, the results of tape changes and recorder checks shall be noted on each facility's DA Form 3502-R.

e. Tape Recorder Labels. An identification number shall be attached to each tape reel and its container. At the beginning of each day, the numbers of the tape and deck being used will be entered on DA Form 3502-R; for example, Tape 3, B Deck. If a tape change is needed during the shift, the reason for the change, the number of the tape removed, and the number of the tape started shall be entered on DA Form 3502-R; for example, "Accident R12345, Tape 3 removed; Tape 4, A Deck started." (The number of the tape being started does not necessarily need to be noted.) The person changing the tape shall place the recorder transport position, date and time (UTC), and his initials on the tape reel before storing it. The tape number need not correspond with the day of the month. However, this could be done by having four or five spare tapes (for example, numbered Spare 1, Spare 2, and so on) to use in place of Tape 4.

f. Tape Recording Accountability. The ATC chief/ATC facility chief has custodial responsibility for tape recordings made on equipment furnished or maintained by the Army. When another service or agency has custodial responsibility for the recorder tapes, an LOA shall be initiated to specify access and retention policies and procedures.

g. Tape Recording Maintenance

(1) Tapes containing normal day-to-day traffic information shall be retained for a minimum of 15 days. The information is then erased, if possible, and the tapes are returned to service. Any tape may be used for training after it has been retained for the required amount of time. Cleaning the tapes and splicing the nicks increase the quality and life of the tapes. Normally, the post audiovisual branch or a similar facility has equipment to erase information and clean and splice tapes. When possible, ATC facilities should use these services.

(2) Tapes containing information on emergencies or alleged violations shall be retained for 30 days. They shall be identified and certified as outlined in Figure 3-2. At the end of 30 days, if no verbal or written request for these tapes has been received, they may be returned to service. If a request is received concerning an emergency or an alleged violation, tape recordings of the emergency or violation shall be handled the same as a tape concerning an accident, as explained in (3) below.

(3) Tapes containing accident information shall be retained for a minimum of 6 months. They will be removed from the recorder as soon as possible and identified and certified using the statement in Figure 3-2.

(4) If transcripts or re-recordings are not requested within 6 months, those tapes will be returned to service. An exception to that policy would be all tapes containing hijacking information, which are retained for 3 years.

(5) Original recorded tapes are sometimes made part of an accident or incident investigation file. The only parts of the tape that must be retained are those that contain the conversation during the time of the accident or incident and the initial and terminal overrun of 5 minutes of the running time of the tape. After the pertinent portions of the tape have been removed, the remaining information will be erased and the tape will be cleaned, spliced, and returned to service.

I certify that this is the original recording made in

_____(facility)_____

containing all conversation on __(position)__ at __(channel)__

pertaining to __(accident or emergency)__ __(aircraft ID)__

on ____(date)____.

Signature_____

Name_____

Grade_____

Title_____

Date_____

Figure 3-2. Certification of tapes containing accident data

(6) Transcripts, re-recordings, or copies of tapes are often requested. All data pertinent to the incident from at least 5 minutes before the initial contact to at least 5 minutes

after the last contact will be included on the tape. To re-record, personnel will use a direct electronic connection between the playback and recording equipment when possible. Those personnel supervising the reproduction shall preface the copy with a statement containing the information furnished at the beginning of written transcriptions as shown in (8) through (13) below. If several channels are recorded, separate portions of the copy will also be prefaced by this statement. The statement shall include the date and time of reproduction, the name of the person supervising the reproduction, and a certification that the reproduction is a true copy of the original recording. Handling and playing back the original recording must be kept to an absolute minimum.

(7) When re-recorded transcripts are certified, they become official records and shall be retained per AR 25-400-2 and this manual. They are treated the same as original tapes or records. If written authorization is received from the airfield commander or investigating team, re-recorded or transcribed tapes may be returned to service immediately. If written authorization is not received, the tape will be retained for 6 months.

(8) The first page of each transcript will be DA letterhead. This page will include the following information:

- Subject.
- Identity of the recording facility.
- List of facilities making transmissions and, as used in the body of the transcript, abbreviations for each.
- Frequency, land line, or position being recorded.
- Date of and time covered by the transcript.
- Certification.

(9) The completed transcript will be marked "FOR OFFICIAL USE ONLY (SPECIAL HANDLING REQUIRED)." AR 25-55 contains more information on releasing records from Army files.

(10) ATC facilities included in the transcription shall be abbreviated by using the appropriate location designator followed by ARTCC, TWR, ARAC, GCA, FOC, FCC, or AFFS. Aircraft may be identified by an abbreviated call sign when confusion will not result.

(11) A typed transcription will have the following format:

- Precede each transcription with the identity of the transmitting station. When the station is unknown, use UNK.
- Single-space the body of the transcription.
- Double-space between contacts to separate them.
- Show breaks in continuity of contact, such as garble, by using a series of asterisks; otherwise, the transcription shall be verbatim.
- Make time entries to the nearest second preceding each transmission when time-code generator systems are installed. These entries will be at approximately one-minute intervals in the body of the transcript.

(12) The transcription shall be certified as shown in Figure 3-3.

As custodian of the original recording, I hereby certify this to be a true and exact _(copy/transcript)_ thereof.

Signature_____

Name_____

Grade_____

Title_____

Date_____

Figure 3-3. Certification of transcription

(13) When copies of written records are required, each copy shall be certified as shown in Figure 3-4 (page 3-14).

I hereby certify this to be a true and exact copy of the original record on file at this office.

Signature_____

Name_____

Grade_____

Title_____

Date_____

Figure 3-4. Certification of copies of written records

3-15. NAVIGATIONAL AIDS

The approach control facility is normally designated the primary NAVAID monitoring facility. At locations without an approach control, the tower is designated the primary NAVAID monitoring facility.

a. Monitors.

(1) Some ATC facilities do not operate continuously. If the NAVAID is to remain on the air continuously, another facility or agency shall be assigned monitoring responsibility. This facility or agency shall also provide continuous manning and respond quickly to the call for maintenance personnel. In addition, it shall establish procedures in an LOA or operations letter concerning equipment outages and submission of notices to airmen.

(2) Monitors that do not provide an automatic visual or aural alarm shall be checked at least once an hour. When an ATC facility is responsible for monitoring NAVAIDs, the facility chief shall include monitoring instructions in the FTM. If a NAVAID monitor alarm is received, the identification feature shall be checked aurally and the responsible maintenance authority notified immediately. If the alarm cannot be silenced and the identification feature cannot be heard, the NAVAID is considered inoperative.

(3) If personnel suspect that an alarm is caused by a control line or monitor failure rather than a malfunction of the NAVAID, they must take the appropriate action per FAA Handbook 7110.65. If a malfunction is confirmed, use of the NAVAID shall be discontinued. A NOTAM shall be published showing NAVAIDs with inoperative monitors as unmonitored. A DOD FLIP, En Route Supplement, and IFR Supplement will also show those NAVAIDs without installed monitors as unmonitored.

b. Interruptions and Malfunctions.

(1) The ATC chief/ATC facility chief establishes procedures for reporting interruptions to NAVAIDs and malfunctions in communications and radar equipment. He ensures the timely response of maintenance personnel to a report of an interruption or a malfunction.

(2) The on-duty SS or CIC shall report any known or reported malfunction in equipment or interruption to a NAVAID to the appropriate office; for example, maintenance personnel, ARTCC, approach control facility, and any other facility that may be affected. He then reports the malfunction or interruption to the airfield commander.

3-16. WIND INDICATOR EQUIPMENT

a. Wind Indicators. Normally, each AAF or AHP has only one wind-sensing unit and all ATC facilities use the same unit. These wind indicators should be located at the landing and takeoff area. Because of terrain, distance, local operational requirements, equipment and facility upgrades, and mobile facilities, wind equipment may be located at various sites on the airfield. Readout values derived from transmitters not located at the landing and takeoff area shall be used as an aid in determining estimated wind conditions. Controllers can determine estimated wind after comparing readout values from transmitters and wind socks and from visual observations of the landing and takeoff area. Estimated wind values transmitted to other facilities and to pilots shall be reported as wind estimated; for example, "Wind estimated two one zero at five."

b. Wind Indicator Cross-Check.

(1) ATC facilities that have an associated NWS or a military weather station that uses the same sensing equipment shall compare wind direction and speed indicator readings at the beginning of each workday with those of the weather station. These facilities must keep in mind that the NWS wind-direction equipment is oriented to true north; therefore, magnetic variation must be applied. The time of the cross-check and

associated procedures shall be coordinated with the meteorologist-in-charge or other appropriate personnel.

(2) If a wind-direction indicator is out of tolerance with other indicators on the same sensor by 5 degrees or if the wind-speed indicator reveals a disparity of ±5 knots, meteorological personnel shall be notified immediately. If the indicators show an error of over 10 degrees or 10 knots, the equipment will be considered inoperative and meteorological personnel shall be notified immediately. In the latter case, further wind information shall be obtained from other properly functioning wind instruments.

3-17. ALTIMETERS

a. Setting Comparisons.

(1) At the beginning of each shift, an ATC facility providing air traffic service shall compare the official altimeter setting with its instrument setting. Any difference shall be posted next to the face of the instrument and recorded on DA Form 3502-R. The correction factor shall be applied to the reading obtained from the facility instrument before the altimeter setting is transmitted to a pilot or another facility. Use of the facility instrument shall be discontinued--

- At nonprecision approach locations when the correction factor exceeds ±0.05-inch of mercury.

- At precision approach locations when the correction factor exceeds ±0.02-inch of mercury.

(2) Altimeter-setting indicators that are inspected and calibrated according to AWS guidance may be used to obtain the official altimeter setting at locations that have no local weather service support. At facilities with no weather reporting station and only one altimeter device, the altimeter setting may be compared with values obtained from adjacent weather stations if--

- At locations where precision ILS or PAR approaches are conducted, the distance to the weather station is not more than 10 nautical miles and the wind speed is 25 knots or less.

- At locations where nonprecision approaches are conducted, the distance to the weather station is not more than 25 nautical miles and the wind speed is 30 knots or less.

(3) Altimeter settings are not compared when weather conditions indicate the probability of a steep pressure gradient between the two locations or the elevation difference exceeds 1,000 feet. At locations that do not meet the 10- and 25-nautical-mile limitations, a mercurial barometer or altimeter-setting indicator is required to make comparisons.

(4) Tactical ATC facilities not equipped with altimeter-setting indicators shall obtain settings from supporting Air Force weather teams.

b. Estimated Settings. Air traffic controllers shall not issue an altimeter setting as estimated to pilots. They shall issue the setting as missing if it is not available. Controllers responsible for taking weather observations must comply with paragraph 3.6 of the Federal Meteorological Handbook No. 9, Aviation Weather Observations. This paragraph illustrates the correct method of indicating missing information on the Federal Meteorological Form MF1-10C. The altimeter setting is indicated as missing by entering M in the appropriate column. All other elements can be estimated, but the temperature, dew point, or altimeter setting must be the actual setting or be indicated as missing.

3-18. EGRESS SYSTEMS

a. All control towers shall comply with the egress requirements of the Life Safety Code in National Fire Safety Code 101. Compliance with the code shall be evaluated by local or host-nation safety and fire professionals. Documentation of evaluations shall be maintained as a permanent facility record. If host-nation requirements apply, they must be met even if they are more stringent.

b. Some towers are required to have an egress system in addition to the normal means of entering and exiting. These towers shall obtain and install a system that safety and fire professionals determine is satisfactory. The preferred alternate egress system is an exterior ladder that complies with the safety requirements for fixed ladders published in the American National Standards Institute Regulation A14.3.

3-19. NIGHT VISION GOGGLES

a. At locations where NVG are required, controllers shall be trained in the operational use of NVG. Until NVG are available to TDA/TOE ATC personnel, they should be obtained through coordination with the aviation unit requiring the training. All NVG training will be entered on DA Form 3479-R, Section III. The NVG shall not be worn by controllers but will

be used as binoculars during night vision operations. ATC facilities or units using NVG shall establish a training program that includes, as a minimum, the instruction given below.

(1) Orientation and briefing on HVG operation and care. This consists of a class on the characteristics, function, and maintenance of NVG, to include the--

- Removal of NVG from the receptacle, ensuring pressure is released.
- Removal of the front lens covers.
- Insertion of the battery.
- Focus for adjustment of flight data for short gauge and adjustment of local control for infinite.

(2) Preparation of the control tower. This instruction includes--

- Use of minimum lighting.
- Covering of the console to prevent reflection.
- Enforcement of the no-smoking policy.
- Use of NVG for no more than two hours without a break.
- Limit on the number of personnel in the tower.

(3) Hands-on training. This consists of an orientation after dark, to include--

- Instruction to distinguish prominent terrain and other objects in the area.
- Unimpaired vision of traffic areas.
- Adjustment of goggles, as required.
- Distinguishing of an aircraft with minimum lighting.
- Difference between participating and nonparticipating aircraft.
- Strict observation of aircraft at all times.
- Control of airfield and landing area lighting.

(4) Visual contact loss. To reestablish contact, the controller must--

- Know the altitude of the aircraft.
- Request aircraft position reports.
- Use known landmarks.
- Have the observation confirmed by another controller.

b. To establish local NVG procedures, the ATC chief/ATC facility chief shall coordinate with the airfield commander or the senior field aviation commander being supported. These procedures should include--

- NVG routes.
- Traffic density.
- Airfield lighting.
- Hours of operation.
- Traffic restrictions.
- Emergency procedures.
- Weather requirements.
- Nonparticipating traffic.
- Aircraft lighting (lights out or dim mode).
- Publication of a NOTAM, if required.

c. In addition to the above procedures, the ATC chief/ATC facility chief shall ensure that both lighted and unlighted aircraft do not use the same traffic pattern or runway or landing area. The chief shall also ensure that a NOTAM is published if the rotating beacon is to be turned off. If the glare from facility windows or other lights makes it difficult for the controllers to see and separate NVG traffic, the airfield commander or aviation commander shall be advised that positive control cannot be provided. Provisions for advising the commander shall be included in an LOA with the user.

NOTE: During aircraft NVG training when aircraft and airfield lighting systems are turned off, controllers are required to use NVG.

CHAPTER 4

REFERENCE MATERIAL

Section I. Reference Files, Charts, Diagrams, and Maps

The ATC chief/ATC facility chief shall maintain a current set of facility directives, LOAs, FAA handbooks and orders, Army regulations, field manuals, technical manuals, and facility training manuals. All references shall be immediately available to facility personnel for operations, reference, training, and study. Appendix B lists the publications that are basic to ATC facility operations and training. The ATC chief/ATC facility chief shall determine if additional publications are required to support operational or training needs. Reference material shall be arranged in loose-leaf binders, labeled, and kept in a bookcase or rack. The ATC chief/ATC facility chief also shall recommend that the local library, MOS library, and education center maintain an adequate supply of training documents for skill development testing.

4-1. FACILITY REFERENCE FILE

a. The ATC chief/ATC facility chief is responsible for establishing and maintaining a complete reference file of the written material required for facility operations. This file shall be maintained in the ATC chief's/ATC facility chief's office or in platoon headquarters.

b. As a minimum, the facility reference file shall include the publications listed in Appendix B. This file also should contain copies of FTMs, SOPs, operating manuals, and other materials of value to controllers and facility operations. At dual ATC facilities (TWR and GCA), one facility reference file may be used by both facilities. However, separate files may be justified because of the geographic separation of the facilities or the large number of controllers.

4-2. CONTROLLER REFERENCE FILE

The publications listed in Appendix B are required to support daily operations and shall be readily available to controllers in facility operating positions. Dual ATC facilities shall maintain separate controller reference files. The facility reference file may also serve as the controller reference file when the ATC chief's/ATC facility chief's office and facility operations are located in the same room.

4-3. RECENT INFORMATION FILE

The ATC chief/ATC facility chief shall maintain an information file in a folder or notebook or on a clipboard. The file shall be used to post shift schedules and new information about facility operations. It shall be readily available to controllers in facility operating positions. Each controller shall read and initial new directives, changes, or other materials before assuming a control position. Items may be removed from the file when all controllers have initialed them.

4-4. OPERATING POSITION FILES

a. Each facility will maintain operating position files in a loose-leaf binder or some other suitable display file. These files shall be available for each operating position so that all controllers have an immediate source for confirming data or obtaining information. To determine what to include in the files, the ATC chief/ATC facility chief must decide what material applies to each position. Information applying to all positions may be combined into one operating position file if each position has ready access to it.

b. All local procedures and instruction handbook materials pertaining to a certain operating position will be identified, defined, and maintained. For example, an arrival control position file should include LOA, operations letters, memorandums, and other documents pertaining to arrival control procedures.

c. Mandatory items for operating position files include--

(1) Instructions dealing with airfield emergencies such as in-flight emergencies, hijacking, and bomb threats.

(2) A list of suitable airports, as determined by the facility chief, showing runways, type of surface lighting, and distance and bearing from the facility.

d. Suggested items for operating position files include--

(1) Standard instrument departure diagrams.

(2) Photographs of a radar scope adjusted to optimum.

(3) Extracts from memorandums of agreement, operations memorandums, and facility memorandums.

(4) A photograph of a video map superimposed over radar-ground returns to aid in determining the accuracy of the scope alignment.

4-5. CHARTS, DIAGRAMS, AND MAPS

Each ATC facility, control tower, radar facility, and flight-following facility shall maintain certain charts, diagrams, and maps for reference. The requirements for these materials are given below.

a. ATC Facility. Each ATC facility shall maintain current crash grid maps, sunrise and sunset tables, and flight information publications.

b. Control Tower. Each control tower shall develop and maintain the following diagrams and charts:

(1) Airfield diagram. The airfield diagram shall depict runways, ramps, blind spots, ILS-critical areas, helipads, wind equipment, and RT groups. The actual magnetic heading of the extended runway centerline shall be updated annually and posted on the airfield diagram chart. The date of this update also shall be posted to the chart.

(2) Intersection-takeoff diagram. The intersection-takeoff diagram shall depict distances remaining rounded up to the nearest 50 feet; for example, 4,075 would be rounded up to 5,000 and 10,045, to 10,050.

(3) Visibility charts. The ATC chief/ATC facility chief and weather support personnel shall prepare a chart or list of day and night visibility markers. They may use panoramic photographs marked with distances and cardinal compass points. Each marker shall be identified and its distance from the tower noted. The height of the marker also shall be noted if used for estimating heights of clouds and obscuring phenomena. The ATC chief/ATC facility chief and weather personnel will review these charts annually; the person conducting the review will annotate his name and the date on the chart.

NOTE: Additional drawings, charts, or maps will be prepared as required.

c. Radar Facility. Each radar facility shall keep a runway diagram of each airfield it services and a map of the facility's jurisdiction area. The map shall depict airfields, NAVAIDs, control zones, area and section boundaries, MOA, restricted and prohibited areas, airways, and prominent objects. The facility shall also maintain a video map or map overlay and an MVA chart. Chapter 5 contains details about video maps, map overlays, and MVA charts.

d. **Flight-Following Facility.** Each flight-following facility shall keep an up-to-date map of the its area of responsibility. Chapter 6 contains additional information about flight-following procedures.

Section II. Administrative Correspondence

The ATC facility shall maintain a file of administrative correspondence. This correspondence should include the letters of agreement, operations letters, and memorandums.

4-6. LETTERS OF AGREEMENT

a. Letters of agreement may apply to a specific facility, a group of facilities, or all facilities within a designated geographical area. LOA are prepared between the US Army and a host nation or other services. They are also prepared between centers and towers, centers and terminal radar facilities, or ATC facilities located on the same or different airfields. The ATC chief/ATC facility chief shall prepare LOA--

(1) To delegate the areas of control jurisdiction and the conditions of use.

(2) To define special operating conditions or specific ATC procedures.

(3) To define interfacility or interagency responsibilities and coordination requirements.

(4) To describe procedures or minima that deviate from or are not contained in FAA Handbook 7110.65, this manual, or other pertinent directives.

b. The ATC chief/ATC facility chief responsible for developing an LOA shall--

(1) Confine the material in each LOA to a single subject or purpose.

(2) Ensure that the LOA is properly prepared.

(3) Describe the responsibilities and procedures that apply to each facility and organization involved.

(4) Attach charts or other visual presentations, as appropriate, to depict the conditions of the agreement.

(5) Delegate responsibility for air traffic control. He shall describe the area in which the responsibility is delegated and define the conditions governing the use of that area. He also shall specify and explain the control, communications, and coordination procedures.

(6) Coordinate the LOA with the appropriate facilities, agencies, and authorities.

(7) Coordinate the letter with the USAASD-E/EUSA/DARR before an LOA with a host country is signed.

(8) Forward all proposed LOA to the appropriate DARR. The DARR shall review and coordinate them and then return them to the originator with comments.

(9) Establish the effective date of the LOA at 30 days after its distribution. This will qive the participants time to familiarize their personnel with the agreement and to revise directives and flight charts.

(10) Prepare the letter in final form.

(11) Obtain the required signatures.

(12) Distribute copies of the signed LOA according to the distribution stated in the letter.

c. A change in the requirements of any party signing the agreement will create the need to rewrite or amend the letter. Revisions, attachments, or supplements to LOA shall be processed as page replacements. They shall be coordinated the same as the original letter. Revisions shall be marked as follows:

(1) Place an asterisk to the left of each new or revised paragraph or section to signify that it is new material.

(2) Identify page revisions by the REV number; for example, REV 1. Enter the effective date in the lower right corner of each revised page.

d. To ensure timeliness and conformance to current policies and directives, the ATC chief/ATC facility chief shall review all facility LOA annually on their anniversary. He will also sign and date the annual reviews. Figure 4-1 (page 4-6) shows a sample format for an FAA or a US Army LOA.

(Name) Air Route Traffic Control Center and (Name) FAA

(Name) Approach Control and (Name)

LETTER OF AGREEMENT

EFFECTIVE: (Date)

SUBJECT: Special VFR Operations Within (Name) Airfield Control Zone

1. PURPOSE: (List responsibilities, and describe necessary coordination.)

2. CANCELLATION: (Use as required.)

3. SCOPE: (Specify areas having ATC responsibility and names and types of facilities.)

4. RESPONSIBILITIES: (Specify responsibilities.)

5. PROCEDURES:

a. ATC-assigned airspace. (List the procedures for requesting and authorizing airspace, handling aircraft to and from airspace, and notifying ATC when the airspace is no longer required.)

b. Transfer of control. (Specify transfer procedures.)

c. Departures. (Specify the required advance time for filing flight plans, and outline additional items required in the flight plan. For example, list the type of departure and the control transfer points.)

d. En route. (Include in this information that ATC is responsible for effecting separation in assigned airspace when nonparticipating aircraft are cleared to operate within that airspace.)

Figure 4-1. Sample format for an FAA or a US Army LOA

e. Arrivals. (Outline handoff procedures and special instructions.)

f. General. (Include, if appropriate, missed-approach procedures, special VFR operations, and provisions for handling movement of national-defense aircraft in emergencies.)

6. ATTACHMENTS: (List, as required, such items as a chart of ATC-assigned airspace areas and common reference or handoff points.)

Airfield Commander, (Name) AAF Chief, (Name) ARTCC

Chief, (Name) ATC Facility Director, (Name) Region

(Name and title of appropriate authority)

Figure 4-1. Sample format for an FAA or a US Army LOA (continued)

4-7. OPERATIONS LETTERS

a. Operations letters apply between ATC facilities and other agencies, elements, or units located on the same airfield or heliport. The ATC chief/ATC facility chief shall prepare operations letters--

(1) To supplement established operational or procedural instructions.

(2) To establish or standardize operating methods.

(3) To establish responsibilities for--

(a) Operating airport equipment.

(b) Providing emergency services.

(c) Exchanging braking action reports with the airport management. (As a minimum, procedures shall cover the prompt exchange of reports indicating runway braking conditions have deteriorated to "poor" or "nil" or have improved to "good.")

(d) Reporting operating limitations and hazards.

(4) To define the responsibilities of the tower and the airport management or other authority for movement and nonmovement areas.

b. Appropriate subjects of operations letters between the tower and airport management/aircraft operator include--

(1) Airport emergency service.

(2) Airport lighting operation.

(3) Airport condition reporting.

(4) Vehicular traffic control on airport movement areas.

c. The ATC chief/ATC facility chief responsible for developing an operations letter shall--

(1) Confine the material in each letter to a single subject or purpose.

(2) Ensure that the operations letter is properly prepared.

(3) Describe the responsibilities and procedures that apply to the facility and organization involved.

(4) Attach charts or other visual presentations to depict the conditions or circumstances stated in the letter.

(5) Coordinate the letter with the airfield commander before initiating any other coordination.

(6) Coordinate the letter with the appropriate facilities, agencies, or authorities.

(7) Obtain approval of the operations letter.

(8) Establish an effective date that allows time for participating facilities and agencies to familiarize their personnel with the contents of the letter and to complete other preimplementation actions.

(9) Prepare the letter in final form.

(10) Sign the letter and obtain the other required signatures.

(11) Distribute copies of the signed letter to the appropriate facilities or agencies.

d. All parties concerned shall retain a copy of the operations letter and shall review it annually on the anniversary of the letter. The ATC chief/ATC facility chief shall date and sign the annual review. Figure 4-2 shows a sample format for a control tower or an airfield operations letter.

e. A change in the requirements of any party signing the operations letter will create the need to rewrite or revise the letter. However, a change in key personnel does not require a rewrite or revision. Rewrites or revisions shall be processed as page replacements and be coordinated the same as the original letter. Revisions shall be marked as follows:

(1) Place an asterisk to the left of each new or revised paragraph or section to signify that it is new material.

(2) Identify page revisions by the REV number; for example, REV 1. Enter the effective date in the lower right corner of each revised page.

Operations Letter Between_____(Name)_____Airfield Operations

and_____(Name)_____Control Tower

_____(Name)_____Airfield Operations Letter No_____

_____(Name)_____Control Tower Letter No_____

SUBJECT: (Write a short statement to describe the contents of the letter.)

EFFECTIVE: (Enter the effective date of the letter and the number of cancelled letters.)

(Write a paragraph to outline the text of the letter. Give enough detail to preclude a misunderstanding of the intended procedures and responsibilities and required coordination.)

_____(Signature)_____	_____(Signature)_____
Airfield Operations Officer	ATC Chief/ATC Facility Chief, Tower Airfield

DISTRIBUTION: (as appropriate)

Figure 4-2. Sample format for a control tower or an airfield operations letter

4-8. MEMORANDUMS

a. The ATC chief\ATC facility chief shall issue memorandums when internal facility operations must be regulated and standardized. Facility memorandums will contain instructions pertaining to the administrative or operational practices and procedures within the facility. The chief may issue a memorandum as a joint document when it applies to two or more ATC facilities under his jurisdiction.

b. Facility memorandums will follow the standard Army memorandum format and be numbered in sequence (92-1, 92-2, and so on). They will be limited to one subject, operation, or procedure; enclosures and attachments may be included. Facility memorandums shall be reviewed for currency annually on their anniversary.

Section III. Operating Records and Forms

Facility records shall be managed according to the procedures in AR 25-400-2 and as directed by the servicing Adjutant General. They are a part of the facility's permanent records and are subject to review by authorized personnel or agencies. No records, recorded or written, shall be released without permission from the ATC chief/ATC facility chief and then only after coordination with the airfield commander. Entries on all facility operating forms shall be neat and accurate. Whenever practical, entries should be typewritten (computer forms may be used); however, entries may be printed in ink. Incorrect entries will not be erased or struck over. When an entry must be corrected, a line will be typed or drawn through the incorrect portion and the correct entry made. The controller correcting the error shall initial the correction. Blank copies of the reproducible forms referenced in this manual (except DA Form 2696-R) are at the back in numerical order. These forms are to be locally reproduced on 8 1/2- by 11-inch paper. Instructions for completing facility operating forms are given below.

4-9. GCA OPERATIONS LOG

a. DA Form 3501-R is used to record air traffic in GCA facilities. It should be initiated at the beginning of each calendar day (2400 local time or whenever the facility begins operations for the day). Time entries shall be in UTC. The ATC chief/ATC facility chief shall review each completed DA Form 3501-R and sign the authentication (block 2). If more than one form is required to log daily activities, the pages shall be numbered consecutively and stapled together. Daily totals shall be entered on the final form.

b. DA Form 3501-R shall be completed as follows:

(1) Items 1 through 3. Self-explanatory.

(2) Column A. Insert a check mark (✔) in the applicable column.

(3) Columns B through D. Self-explanatory.

(4) Column E. Enter LA, FS, TG, or other type of approach.

(5) Column F. Enter the operating initials of the controller conducting the surveillance portion of the approach.

(6) Column G. Enter the operating initials of the controller conducting the final portion of the surveillance approach.

(7) Column H. Enter the operating initials of the controller conducting the final portion of the precision approach.

(8) Column I. Enter the operating initials of the controller monitoring the approach.

(9) Column J. Enter the operating initials of the controller monitoring the departure.

(10) Column K. Enter the operating initials of the controller conducting the simulated approach.

(11) Column L. Self-explanatory.

(12) Column M. Enter remarks such as MA or other control instructions.

c. DA Form 3501-R shall be filed daily with DA Form 3502-R and retained for a minimum of one calendar month. ARAC facilities shall use flight progress strips to record traffic movements in lieu of DA Form 3501-R.

NOTE: FAA Form 7230-7 may be used in lieu of DA Form 3501-R.

4-10. DAILY REPORT OF AIR TRAFFIC CONTROL FACILITY

a. All Army ATC facilities shall use DA Form 3502-R to record daily activities. This form shall be initiated at the beginning of each calendar day (0000 local time or when facility operations begin for the day). Entries shall be in UTC.

Midnight local time or facility closing time will be considered as the close of the day.

b. Only authorized Army, FAA, and ICAO abbreviations and phrase contractions shall be used for entries. The entries will describe all abnormal conditions, unusual occurrences, or items of interest. Examples of entries are equipment checks, outages, or restorations; emergencies; accidents; and unsafe conditions. All entries in the Remarks section of the form shall be followed by the operating initials of the individual making the entry.

c. The controller responsible for the shift shall sign the appropriate signature block of the form in ink whenever he departs the facility. Two controllers on the same shift may be assigned supervisory responsibility at different times. When this occurs, they both shall sign in the appropriate block. They will divide the block and include the UTC for the period they were assigned supervisory responsibility; for example, Chet Spangler, 0600-0930/Frank Dennis, 0930-1400.

NOTE: If the SS is temporarily absent, the CIC shall be indicated in the Remarks section of the DA Form 3502-R.

d. The facility chief shall review each DA Form 3502-R for accuracy and sign in the authentication block. This form shall be filed daily and retained for a minimum of one calendar month.

e. The following entries shall be made on the DA Form 3502-R

(1) Equipment checklist completed.

(2) Weather status of the field (Enter IFR or VFR).

(3) Equipment outages or returns to service. (Enter a capital E to the left of the time entry.)

(4) Tape being recorded; for example, Tape 3 in use.

(5) Prevailing or tower visibility if it is different from that reported by the weather service.

(6) Initials of the person and the facility notified of events; for example, CS/WX, JD/OPS, or RH/ARAC.

(7) Shift change completion; for example, Shift completed WR.

(8) Facility or log opening and closing. (Around-the-clock facilities should show when the log was opened and closed. Part-time facilities should show when the facility opened and closed.)

4-11. AIR TRAFFIC CONTROL POSITION LOG

a. DA Form 3503-R provides a record of personnel assigned to each operating position within an ATC facility. It does not, however, provide a record of the SSs. Controllers assigned responsibility for an operating position initiate the DA Form 3503-R at the beginning of each calendar day. (This would be 0000 local time or whenever facility operations begin for the day). Entries shall be in UTC. Pages shall be added as necessary to complete the day. (This would be 2400 local time or whenever facility operations terminate for the day). Positions shall be identified by entering the appropriate control-position initials.

b. Controllers requiring direct supervision shall use their operating initials followed by a slant mark (/) and the facility-rated controller's initials. Those under direct supervision include--

- Controller trainees who are not positioned-qualified.
- Rated controllers who are not current.
- Rated controllers who are receiving remedial training.

c. DA Form 3503-R is filed daily with DA Form 3502-R and retained for a minimum of one calendar month.

4-12. ATC FACILITY AND PERSONNEL STATUS REPORT

All units authorized or assigned US Army and DAC air traffic controllers and ATC maintenance personnel shall prepare and submit DA Form 3479-6-R within the first 15 workdays of the succeeding calendar month. The units shall forward this completed unclassified form to the MACOM headquarters through the normal chain of command. They also shall send a copy directly to Commander, USAAVNC, ATTN: ATZQ-ATC-MO, Fort Rucker, AL 36362-5265. All fixed-base ATC facilities shall provide the local airfield commander with a copy of the monthly traffic record (block 11 of the form). The responsible commander or his

designated representative will verify the accuracy of the report. Instructions for completing DA Form 3479-6-R are given below.

a. Block 1, Unit. Enter the agency, battalion, company, platoon, or detachment having command of the ATC facility, branch, division, element, or section identified in the report. The mailing address of the city, post, or station shall be included.

b. Block 2. Facility/Branch/Division/Element/Section. Enter the name, title, or number of the section to which ATC personnel being reported are assigned; for example, Forney Army Airfield, Hanchey AHP, 1st Platoon, or 3d platoon.

c. Block 3, Date. Enter the month and year the report covers.

d. Block 4 Hours of Operation. Enter the number of hours, per day and days per week that each facility or staff element operates. More than one entry may be required to indicate different hours of operation; for example, Monday through Friday/16 hours (M-F/16) or Saturday, Sunday, and Holidays/ 8 hours (S-S-H/8).

e. Block 5, Manned Positions. Enter an X under each position that is manned by an individual dedicated to that position during each shift. If an individual is responsible for more than one position during a given shift, show position responsibility by entering Cl under each position. For example, show the combined positions of SS and LC by placing Cl under each position for that shift. If additional positions are combined and assigned to a second individual, enter C2 under these positions. Shift A shall be the first shift of the day; for example, 0600-1400 or 0700-1500. Shift B shall be the second shift of the day, and Shift C shall be the third shift of the day. The facilities that normally do not operate on weekends and holidays shall use Shift D for those periods.

NOTE: The appropriate acronyms shall be used for position titles. If the appropriate acronyms are not listed in the Glossary of this publication, local acronyms shall be used in block 5 and defined in block 9, Remarks.

f. Block 6, TDA Authorizations (by MOS). Enter both controller and maintenance ATC personnel by MOS (or job series for civilians); follow with the authorized total and on-hand total; for example, 93C-5/4, 2152-2/2, 93D-2/1, or 0856-1/2. Do not indicate skill levels.

g. Block 7, TOE Authorizations (by MOS). Enter totals the same way as in f above.

h. Block 8, Aircraft Activity (by Shift). Enter the total aircraft activity for each shift. Using the fixed-base criteria, report the aircraft activity for tactical ATC exercises by shift only.

i. Block 9, Remarks. Use this block to explain any entry any entry in blocks 1 through 8.

j. Block 10, Personnel. Enter alphabetically by facility or section all assigned military and civilian ATC warrant officer, controller, and maintenance personnel. Complete block 10 as shown below.

(1) Name. Enter the individual's last name, first name, and middle initial.

(2) Rank. Enter the pay grade of each individual; for example, E6, GS11, or WG10.

(3) MOS. Enter the individual's primary MOS. If the DMOS is different from the PMOS, make the appropriate entry in the Remarks column.

(4) ETS. Enter the individual's current ETS (military only) .

(5) ATCS No. Enter the individual's assigned ATCS certificate number.

(6) Date Assigned. Enter the date that the individual is assigned to a facility for training. Enter a new assigned date each time an individual is moved geographically or is moved from one facility to another within the same facility complex; for example, Heidelberg to Wiesbaden or tower to GCA.

(7) Date Rated. Enter the letter T for trainee. Enter the date the individual is issued a facility rating for that facility. This date shall correspond to the date entered on the back of the ATCS certificate. If, for example, an individual is rated in tower and working in GCA, make no entry in this column until he becomes rated in GCA. Annotate the tower rating, however, in the Remarks column.

(8) **Remarks.** Enter the following information, as applicable:

(a) The gaining unit shall list TDY or SD personnel and indicate the primary unit. The primary unit shall list TDY or SD personnel and indicate the location of the TDY or SD.

(b) List ETS or PCS losses in the Remarks column. After the individual's name, indicate whether this is a 90-, 60-, or 30-day ETS or PCS loss. Also show the ETS and PCS moves on the form for the month following the ETS or PCS. Enter the date of departure and the location of the move. For PCS losses, indicate the estimated time of arrival at the new location. Attach the ATCS certificates for ETS personnel to the DA Form 3479-6-R submitted for that month.

(c) Enter REQ if making an initial request for reissuance of an ATCS certificate. State the reason for the request, such as lost, worn, or name change; indicate the date the individual completed ATC school. These entries shall remain in the Remarks column until the individual receives a new ATCS certificate.

NOTE: An ATCS certificate is issued to each military controller upon graduation from AIT at Fort Rucker, Alabama.

(d) Enter primary and additional ATC duty assignments.

(e) Enter the training status and cumulative downtime; for example, PQ FD/GC, 10 days CDT.

(f) Enter the training extensions and the number of days the training time is extended. Include the reason the individual did not become rated, qualified, or certified in the prescribed time.

(g) Enter grounding, and include the estimated date for return to duty. List the reason for grounding using one of the following terms: positive urinalysis, medical, administrative, or disciplinary.

(h) Enter reclassification actions and suspensions. (When an individual is being reclassified, he remains on report and has no ATCS number until reclassified.) State the reason for suspension; for example, apathy, lack of ability, or pending medical evaluation.

(i) Enter the reason why an individual is not working in the facility or unit or the reason why training is not being conducted; for example, emergency leave, field exercise, unit training NCO, or ETS.

(j) Enter the social security number of individuals arriving or departing the unit (PCS or ETS).

(k) Enter the dual rating; for example, TWR/GCA.

(l) Enter any other data; for example, radar-qualified (for maintenance personnel), pathfinder, tactical certification, or Q8-qualified.

(m) Above the signature block, list the last AIG message received.

NOTE: The following abbreviations and acronyms shall be used to complete the form: cumulative downtime (CDT), date training starts (DTS), emergency leave (emg lv), estimated date of return (EDR), estimated date of arrival (EDA), field training exercise (FTX), medical grounding (med gd), reclassification (reclas), training time extended (TTE), training time resumed (TTR), and training time stopped (TTS).

(9) Date. Enter the date the form was completed.

(10) Prepared by. Enter the name of the individual who completed the form and the telephone numbers (commercial, including the area code, and DSN). A signature is not required.

(11) Authentication officer. Enter the name, title, office symbol, and telephone numbers (commercial, including the area code, and DSN). A signature is required.

NOTE: All dates shall be entered numerically by month, day, and year; for example, August 21, 1992, will be entered as 08/21/92.

k. Block 11, Monthly Traffic Record.

(1) In addition to the data in block 8, fixed-base ATC facilities shall maintain a monthly traffic count in the following categories:

(a) Tower--IFR and VFR movement by local and transient aircraft.

(b) ARAC (not to include final)--IFR and VFR.

(c) GCA--radar vector (pattern).

(d) GCA/ARAC--final ASR and final PAR.

(e) AFFS/FOC/FCC flight following--total activity. Use the following criteria to count total AFFS/FOC/FCC activity:

Count the initial contact with an aircraft as one.

Count each position report made while the aircraft is en route as one. (To be counted, the position report must be posted to the flight progress strip.)

Count each aircraft entering or departing an unmanned area (restricted area, range and NOE, NVG route) as one. (To be counted, this data must be posted to the flight progress strip.)

(2) Maintain a separate count of activity for military aircraft, air carriers, and general aviation aircraft in fixed-base control towers, approach control facilities, and ground-controlled approach facilities.

(a) **Control tower.** Use the following criteria to count control tower activity:

- Count a single aircraft arrival, departure, or overflight as one.
- Count a single aircraft touch-and-go, stop-and-go, low approach, missed approach, or wave-off/go-around below the traffic pattern altitude as two.
- Count formation flights according to the number of aircraft in the formation. For example, count a flight of two aircraft flying a low approach as four and a flight of two aircraft making a full stop as two.
- Count helicopters that remain within the airport traffic area while on air taxi to or from working or alert areas the same as departures or arrivals. Enter the count in the tower VFR local column.

(b) **Approach control.** Use the following criteria to count approach control activity:

Count aircraft operations the same as tower operations. However, count formation flights as only one operation.

Count aircraft as instrument operations when they are provided separation regardless of existing weather conditions or type of flight plan.

- Count VFR operations, and enter them in the same format and category as instrument operations; for example, military, air carrier, and general aviation.

(c) GCA operations. Count each GCA pattern (vector), ASR final, and PAR final as one.

NOTE: All facilities shall maintain a list of the types of fixed-wing and rotary-wing aircraft using the AAF or AHP; for example, C-112, OV-1, and UH-1. They shall make these entries on the outside right margin of the monthly traffic record.

4-13. TRAINING AND PROFICIENCY RECORD - AIR TRAFFIC CONTROLLER AND TRAINEE/CONTROLLER EVALUATION

Chapter 7 of this publication covers the preparation, retention, and disposition of DA Forms 3479-R and 3479-l-R.

4-14. FLIGHT PROGRESS STRIPS

a. As outlined in FAA Handbook 7110.65, FAA Form 7230-7, 7230-7.2, or 7230-8 shall be used to record all instrument approaches. As explained in paragraph 6-4 of Chapter 6, FAA Form 7230-21 shall be used to record all flight-following movements.

b. If there is an advantage in doing so, tower facilities may use VFR logs or notepads instead of flight strips to record all VFR operations except flight-following movements. All other facilities, except GCA, shall record IFR and VFR operations on flight strips. The strips shall be filed daily and retained for a minimum of 15 days.

c. Flight progress strips and strip holders may be requisitioned from the US Army Aeronautical Services Agency, ATTN: MOAS-AI, Cameron Station, Alexandria, VA 22304-5050. TB 95-1 identifies the types of strips and strip holders and explains requisition procedures.

4-15. AERONAUTICAL FACILITY - SCATANA ACTIONS AND SCATANA TEST REPORT CARD

The basic unclassified plans for the security control of military and civil air traffic and control of certain federal and non-federal NAVAIDs are contained in AR 95-21. The ATC chief/ATC facility chief shall ensure that all ATC personnel are familiar with this regulation. FAA ARTCCs will prepare FAA Forms 7610-1 and 7610-3 and distribute them to participating ATC facilities.

4-16. OPERATIONAL HAZARD REPORT

a. Controllers that witness procedural or material operational hazards or unsafe ATC practices or procedures shall submit DA Form 2696-R to their supervisors. Procedures covering the completion and disposition of DA Form 2696-R are covered in ARs 95-3 and 385-95. The ATC chief/ATC facility chief shall ensure that blank copies of this form are available. He shall also ensure that completed forms are correct and submitted through the appropriate commander to the local aviation safety officer or airfield operations officer.

b. Information copies of DA Form 2696-R pertaining to Army ATC procedures shall be forwarded to USAAVNC, ATTN: ATZQ-MO-ATC, Fort Rucker, AL 36362-5265. Information copies of completed forms shall be retained at the facility until final action has been completed. The FTM shall include instructions for preparing and submitting DA Form 2696-R.

c. Operational hazard reports are not to be used to report alleged flight violations for punitive action. AR 95-3 provides guidance for processing alleged flight violations.

4-17. EQUIPMENT CHECKLIST

The equipment checklist shall be a locally produced form; the checklist may be a separate form, or it may be placed on the back of DA Form 3502-R. The equipment checklist shall be completed for each day of operation. Completed checklists shall be filed with and retained the same as the DA Form 3502-R. The ATC chief/ATC facility chief may require each shift to complete an equipment checklist.

CHAPTER 5

RADAR FACILITIES

Radar service shall be provided only when the controller has a suitable target and is satisfied that the presentation and the equipment performance are adequate for the service being provided. A target should normally be received on every scan from the final approach fix to the missed approach point.

5-1. RADAR SERVICE

The above criteria establish the minimum standards for maintaining radar identification. In some situations, the radar service being provided may not require a usable target on every scan. The controller shall apply judgment in those situations.

5-2. DAILY PERFORMANCE CHECKS

a. On a day-to-day basis, each radar controller determines if the quality of his radar display is satisfactory for ATC purposes. Radar performance quality is determined by comparing identified targets against data obtained during the commissioning flight check. The controller and maintenance personnel also may determine the quality jointly through minimum performance criteria. Radar controllers shall be familiar with the commissioning flight check and minimum performance data. The ATC chief/ATC facility chief shall make this information available to the controllers.

b. At the beginning of each facility workday or as soon as practicable thereafter, the SS shall ensure that each radar controller completes the necessary radar alignments and adjustments according to the appropriate manuals. As explained in Chapter 3, paragraph 3-2, the daily radar performance check shall be part of routine equipment checks. Controllers shall accomplish this check once each shift unless lack of traffic makes it impossible. For radar performance checks, airport surveillance radar systems shall conform to the tolerances given below.

(1) <u>Coverage.</u> A usable target return will be maintained along the entire airway/route or arrival or departure control route for which radar service is provided. A usable target return is defined as one that is not missed on more than two consecutive scans. Tracking accuracy along these routes will

be within the fix/map accuracy described in (2) below. Radar services for arrival or departure routes exist between the normal handoff point and a point 1/2 mile from the end of the runway. For secondary airports, radar services exist at the point where the aircraft leaves or enters the bottom fringe of the radar coverage pattern. The vertical coverage pattern will meet the operational requirements of the facility in both the horizontal (the distance from antenna to the outer fringe) and the vertical planes. No tolerance is assigned horizontally; however, a complete radar commissioning is required for a vertical acceptance check.

(2) Fix/map accuracy. Radar accuracy must be such that reporting aircraft are within a circular area about the fix. The radius of this area is 3 percent of the fix-to-station distance or 500 feet (1,000 feet for the ATCRBS), whichever is greater. Tolerances are not assigned for a fixed target identification or a moving target indicator.

(3) Surveillance approaches. The radar used for surveillance approaches shall present a usable target return through the final course. Surveillance approaches must meet tolerances in (a) and (b) below, or they will be canceled.

(a) Straight-in approach to runway. The surveillance approach course line will coincide with the runway centerline extended. Maximum error left or right of the runway edges shall not exceed 500 feet at the missed approach point.

(b) Circling approach to an airport. If it is more advantageous to do so, the approach course may be aligned to the center of the airport or to any portion of the usable landing area. For helicopters, the final approach may be established to a missed-approach point not farther than 2,600 feet from the center of the landing area. For a point-in-space approach, the final approach may be established to a point from which flight to the landing area must be accomplished by visual reference to a prescribed route along the surface. In each instance, approach guidelines will be provided to the prescribed missed-approach point. Guidance accuracy must be within 3 percent of the distance between the selected delivery point and the radar antenna.

5-3. DISPLAY INDICATORS

a. Radar approach, departure control, and VFR radar advisory functions will normally be conducted from a radar approach control. A direct-view or TRI display may be used. Radar approach

and departure control functions may be performed from the tower cab--

- If not more than two radar operating positions are required and TRI display indicators are used on a permanent basis.

- If more than two operating positions are required and TRI display indicators are installed on an interim basis pending the establishment of a radar approach control.

- Temporarily, if radar display indicators other than TRI display indicators are installed.

b. When a scan conversion TRI display is used, the standard installation will consist of one operational and one standby scan conversion unit. The range and center selected for the master TRI display will be the same on all slaved display indicators.

c. If the radar operating positions concerned require individual beacon decoding, each TRI display position will need a separate scan conversion unit. A TRI display installed in the tower cab for local control shall be positioned where it can be easily viewed from the local controller's normal sitting or standing position. At least one direct-view indicator must be retained if the surveillance-approach capability would be lost when only the scan conversion TRI display is used.

5-4. AUTOMATION PROGRAM CHANGES

Facility chiefs of automated facilities shall review each Site Program Bulletin (Terminal) issued by FAA Air Traffic Services or the US Air Force and local program patches to determine their impact on operations and procedures. When necessary, a facility directive will be issued to describe functional changes and resulting procedural changes. When a facility has a TRI that is hosted by an FAA or Air Force radar automation system, the facility chief shall coordinate with the host facility chief to determine the impact of a Site Program Bulletin.

5-5. AUTOMATIC ACQUISITION AND TERMINATION AREAS

a. The ATC chief/ATC facility chief shall--

- Establish automatic acquisition areas for arrivals and overflights at ranges that permit automatic acquisition of targets prior to the ARTCC/ARTS-to-ARTS automatic handoff area when the center is in the RDP mode.

- Coordinate with adjacent automated facilities to ensure that computer handoffs will be initiated only after the aircraft are within their facility's automatic acquisition area.

NOTE: Coordination may not be feasible because of airspace assignment. Therefore, a facility directive shall prescribe the use of an appropriate procedure per FAA Handbook 7110.65 to confirm the identity of all aircraft handed off before ARTS acquisition.

- Establish automatic acquisition areas for departing aircraft that are 1 mile or less from the end of the runway.

- Establish automatic termination areas for arriving aircraft that are 1 mile or less from the runway threshold or, at satellite airfields, for arriving aircraft that are at the minimum radar coverage range or altitude, whichever is greater.

- Prescribe, in a facility directive, the operating position responsibility for determining if an automatic acquisition of a departure track has occurred.

b. Distances greater than those specified above may be authorized when operational conditions dictate. FAA concurrence may be obtained through the DARR.

5-6. TPX-42 SYSTEM

The FTM shall specify the discrete codes assigned to each operating position from the code subsets allocated to the facility. The ATC chief/ATC facility chief shall develop local procedures, operating instructions, and training materials to standardize intrafacility operations of the TPX-42 system. Before the TPX-42 is used, its operational status shall be verified. When the system is released to maintenance technicians, TPX-42 data shall not be used and the affected facilities shall be informed of scheduled and unscheduled shutdowns.

5-7. RADAR MAPPING

a. The minimum radar-mapping capability for ATC services, if required, is a five-channel mapper (TB 95-l). Except as noted in paragraph 5-11, radar facilities shall not use grease pencil markings, plastic tape, compass rose grid lines, range marks, or other innovations to replace a video map or map overlay.

b. As necessary, facility chiefs shall coordinate with adjacent radar facilities and the responsible authority for flight checks to ensure the accuracy and adequacy of common reference points on radar maps when they are used to provide ATC services. To reduce scope clutter and increase operational efficiency, data on video maps should be limited to--

- Handoff points.
- Reporting points.
- Major obstructions.
- Range accuracy marks.
- Airfields and heliports.
- Airway/route centerlines.
- Map alignment indicators.
- Hospital emergency landing areas.
- Radio navigational and approach aids.
- Special-use tracks such as scramble, recovery, and SID.
- Runway centerline extensions to a minimum of 6 miles.
- Prominent geographic features such as islands and mountains.
- MVA in hundreds of feet; for example, 25 equals 2,500 feet.
- Boundaries such as controlled special-use areas, terminal buffer areas, or outer fix holding-pattern areas.
- Airports immediately outside the area of jurisdiction that are within the airspace used to receive radar hand-offs and depicted by the facility having jurisdiction over the airspace.

c. The guidance in (b) above is provided to assist controllers in making emergency airport recommendations when in-flight emergencies occur near facility boundaries. There is no intent to establish criteria for airfield depiction. Because facilities having jurisdiction depict airfields on their video maps, those same airfields shall be depicted on the adjacent

facility's video map. FAA Handbook 7110.65 provides additional information on airfield depiction.

5-8. AIRPORT SURVEILLANCE RADAR

To provide surveillance approaches, ASR indicators should be equipped with a video mapper or electronic cursor as a reference to the runway centerline extended. On radar systems that are not equipped to provide this service, a map overlay may be used. This centerline reference shall be extended to a minimum of 6 miles. Indicator grid lines may be used to provide an extended runway centerline by tactical radar systems or during temporary malfunctions of video mapping or electronic cursor equipment. The facility chief shall prepare a chart with recommended altitudes for surveillance approaches. This chart shall be maintained in the facility and made readily available to controllers.

5-9. MINIMUM VECTORING ALTITUDE CHARTS

a. To provide controllers with minimum IFR altitudes for radar vectoring, facilities shall prepare MVA charts for all ASR systems. The area covered by the MVA chart shall be to the maximum primary radar range. Facility chiefs shall determine where the MVA charts are to be displayed, and the appropriate DARR should be contacted if assistance is required. Figure 5-1 (page 5-8) shows a sample of an MVA chart.

b. The MVA chart will be drawn on two current sectional aeronautical charts. Carbon or other suitable duplication methods may be used if the information can be reproduced clearly. The chart will be centered on the location of the radar antenna site and segmented into areas as required by the different MVAs. Configuration of the areas and features shown on the chart will vary with local terrain and operational considerations. If the following methods apply, the preparer of the chart shall--

(1) Depict areas in relationship to magnetic bearings from the antenna site and radials from VORs, VORTACs, TACANs, NDBs, or radar display range marks.

(2) Make area boundaries compatible with map overlay or video map data to facilitate correlation between vectoring charts and radar displays.

(3) Make each area large enough to accommodate aircraft vectoring. In some cases, it may be desirable to combine adjoining smaller areas having different altitudes into a single large area with one altitude.

(4) Establish area boundaries at least 3 miles from the obstruction that determines the MVA. If the distance from the antenna is 40 miles or more, the area boundaries will be at least 5 miles from the obstruction.

(5) Enclose an isolated prominent obstruction with a buffer of at least 3 miles to avoid a large area with an excessively high MVA. If the distance from the antenna is 40 miles or more, the obstruction will be enclosed with a buffer of at least 5 miles. This facilitates vectoring around the obstruction.

c. The minimum IFR vectoring altitude in each area also shall be determined. Minimum vectoring altitudes are established regardless of the flight-checked radar coverage in the sector concerned. Altitudes are based on obstruction clearance criteria only, and the controller must determine if a target return is adequate for control purposes.

d. In a tactical environment, the platoon leader/sergeant may modify these procedures as they apply to the theater of operations; however, flight safety must not be compromised.

e. An MVA may be established outside of controlled airspace. If an MVA is established, this information will be noted on the chart. The minimum vectoring altitude on MVA charts must be compatible with vectoring altitudes established for associated radar instrument approach procedures. The minimum vectoring altitude in each area will be shown, and the controlling obstructions will be documented.

f. The name of the facility will be affixed to both sectional charts, and the edition and date will be printed on the obstruction documentation of each MVA chart. Charts will be sent to the appropriate DARR for review and approval. Following its review of the charts, the DARR will indicate approval by signing and dating the charts. The DARR will then return one set of charts to the originating facility.

g. The ATC chief/ATC facility chief shall ensure that MVA charts are reviewed and the necessary changes made at least once annually to maintain currency and simplicity. They shall obtain DARR certification of all reviews and revisions.

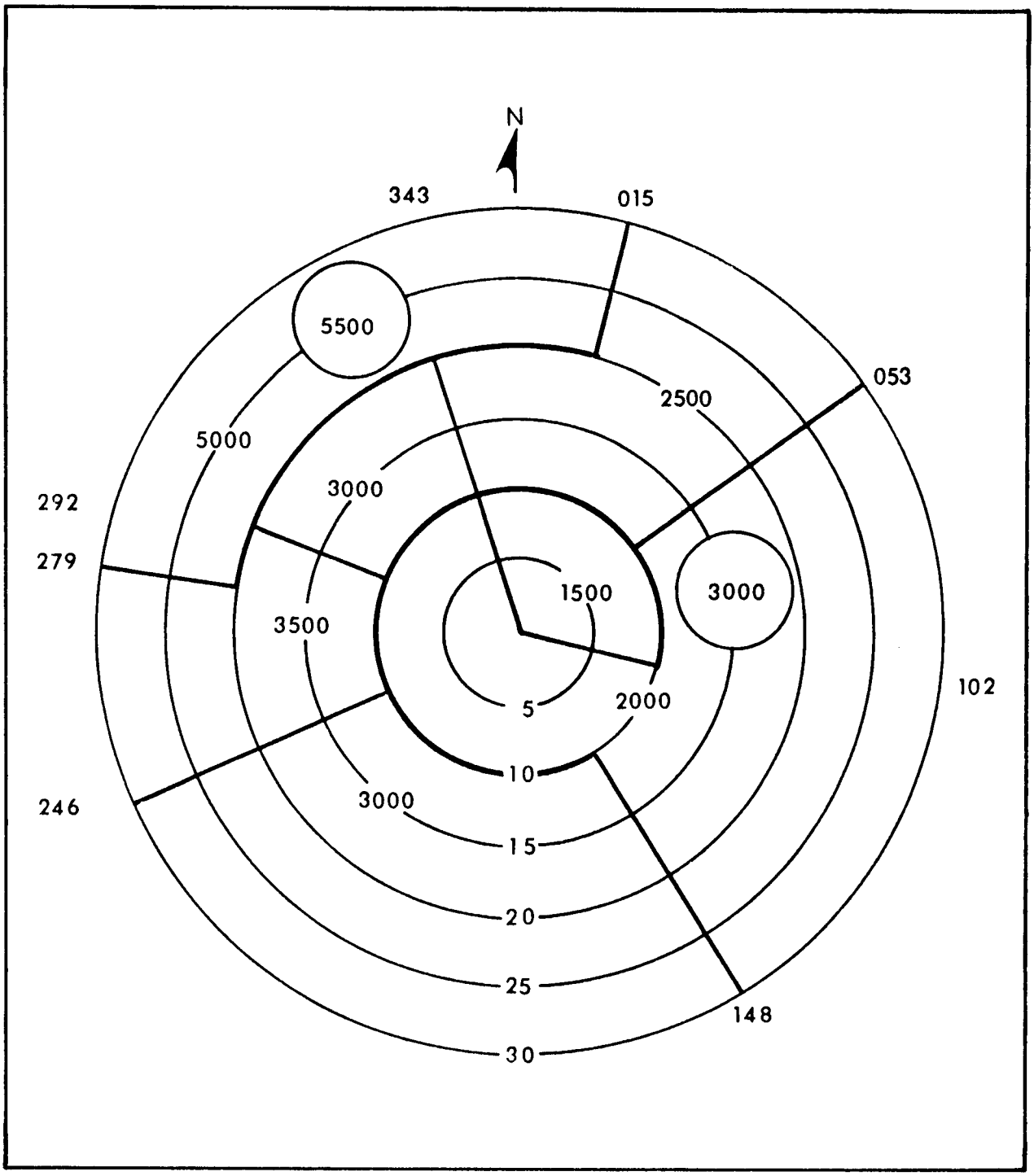

Figure 5-1. Sample of an MVA chart

5-10. MINIMUM SAFE ALTITUDE WARNING AND CONFLICT ALERT

a. The ATC chief/ATC facility chief may temporarily inhibit the MSAW, the approach path monitor portion of the MSAW, and CA functions if their continual use would impact adversely on operational priorities. He is authorized to inhibit CA at specific operating positions if advantageous to operations. When CA functions are inhibited, a brief written report shall be sent to the FAA Regional Air Traffic Division of the DARR. An information copy of the report shall also be sent to the FAA Air Traffic Services. When equipment or site adaptation problems preclude the use of CA functions, a written report is not required.

b. MSAW digital terrain maps shall be kept current. The DARR shall ensure that FAA regional airspace branches furnish all automated radar facilities copies of newly received FAA Forms 7460-2. The DARR also shall ensure that all automated radar facilities receive emergency notices of the erection of structures that are 200 feet or more above ground level and lie within 60 NM of the radar site. To keep DTMs current, automated radar facilities also require copies of any National Flight Data Digest that contains information about the DARR's area of jurisdiction.

c. The ATC chief/ATC facility chief shall ensure that FAA Forms 7460-2 are reviewed and the appropriate corrections made to the DTMs. He also shall ensure that the magnetic variation of the facility's DTMs coincides with the magnetic variation of the facility's radar video and geographical maps.

d. A DTM is constructed to align with the radar antenna, which has been offset for magnetic north. Therefore, any change in antenna offset will result in a corresponding change in the relative positions of the terrain points and obstacles used to determine DTM bin-altitude assignments. This will require not only generating and verifying a new DTM but also readapting the MSAW and CA data bases to coincide with the changed declination. These data bases would be, for example, airport areas, inhibit volume areas, and capture boxes.

5-11. MAGNETIC VARIATIONS OF VIDEO, GEOGRAPHICAL, AND MSAW DIGITAL TERRAIN MAPS

The video map is the primary reference for maintaining radar antenna alignment. The ATC chief/ATC facility chief shall ensure that the magnetic variations of radar video, geographical, and DTMs coincide.

5-12. DIGITAL MAP VERIFICATION

The accuracy of new or modified digital maps shall be verified by using targets of opportunity that fly over displayed fixes, navigational aids, and so forth. Discrepancies shall be documented showing the observed direction and displacement. If any discrepancy cannot be corrected or if the results obtained from targets of opportunity are not satisfactory, the facility may request a flight check through the DARR.

5-13. RADAR BEACONS

a. Radar beacon (IFF or SIF) decoders permit controllers to display responses from selected transponder reply codes in modes 1, 2, and 3. SIF mode 1 and 2 replies are defined by appropriate command instructions. Controllers shall not instruct an aviator to change to or turn off these modes without specific approval from a responsible authority.

b. When existing beacon equipment does not display emergency returns without specific actions by the controller, he shall not be required to monitor radar indicators for emergency display possibilities except--

- When advised by an aircraft that an emergency condition exists and that the airborne equipment is set to provide emergency returns.
- To support emergency situations at the request of an ATC facility or appropriate agency.

c. To obtain the desired display with currently installed equipment, controllers should--

- Select only the radar beacon codes necessary to display radar beacon replies that are associated with the controller's area of jurisdiction.
- Select the raw/test position to display aircraft equipped with an IFF radar beacon decoder only.

NOTE: Replies from beacon-equipped aircraft will appear as undecoded pulse trains when the equipment is operated in this configuration.

d. The double-code train displayed by the identification feature is designed to appear on the indicator for 30 seconds after the pilot releases the switch on the airborne equipment. A controller shall not instruct a pilot to turn off this component of the airborne equipment.

e. When primary radar is not usable and beacon alignment has been verified, beacon returns may be used to vector the aircraft to a point with PAR coverage. This is where the final approach begins. Only primary radar will be used to conduct PAR approaches. Beacon returns shall not be used to conduct ASR final approaches unless an emergency exists and the pilot concurs with their use.

f. When it is desirable to do so, beacon targets may be displaced at a slightly greater range than their respective primary returns. A facility will issue a directive specifying the standard relationship between primary returns and the beacon control slash of secondary returns. This directive is issued whether or not a beacon adjustment is done. The maximum allowable displacement is 1/2 mile applied in l/4-mile increments.

CHAPTER 6

FLIGHT FOLLOWING

The procedures in this chapter for flight following and airspace management are for use in and around cantonment areas, training areas, and ranges. However, this does not preclude their use in a tactical environment.

6-1. PURPOSE

Flight following is the observation of the progress of aircraft identified by radar or by reports at predetermined times or geographic points. The aviator provides the primary navigation information and the controller receives and correlates the aircraft identity with the appropriate geographic position. Flight following also is a service that may be used to provide pilot briefings and en route communications and to assist aircraft in emergency situations. In addition, it may be used to issue and relay ATC clearances and aviation weather information, monitor NAVAIDs, and provide a point-of-flight watch.

6-2. RESPONSIBILITIES

a. Installation commanders should review their local airspace management measures and determine if an Army flight-following service facility is required for flight safety in their cantonment areas, training areas, and ranges. When possible, the airspace management concept (A^2C^2) described in FM 100-103 should be incorporated at each installation system for airspace management. Commanders may need to establish an A^2C^2 cell that would be responsible for developing procedures for planning and scheduling airspace use to preclude conflict. Installations should take the following actions to evaluate existing methods of airspace management or to develop and implement additional airspace/aircraft procedures:

- Determine overall requirements for airspace management training based on the number of aircraft.

- Establish and coordinate an air route system with the installation Plans and Training Office, G3 Air, AT&A officer, and other key players in the airspace management arena.

- Establish routes to move aircraft to/from/through cantonment areas, training areas, or ranges.
- Ensure that routes of flight do not cross/join or have two-way traffic at the same altitude, or establish procedures to preclude conflict.
- Ensure the use of a common frequency for aircraft using the same routes of flight or training areas.
- Establish adequate reporting points that are easily identifiable and are not located in or near brightly lighted or populated areas.
- Establish training areas, and subdivide free-play areas for mission training based on the overall training/airspace requirements, number of aircraft, and type of training.
- Number, letter, or name subdivided areas, and depict them on the installation maps.
- Schedule free-play training areas in advance for specific unit training.
- Establish control procedures that preclude conflict on ingress/egress routes where choke points may exist.
- Establish separate routes of flight for NVG/NOE training and operations.
- Ensure that NVG/NOE routes have easily identifiable start and release points.
- Establish procedures to preclude the mixing of lighted and unlighted aircraft.
- Establish the maximum allowable density for aircraft in each free-play training area, and specify the data in the installation SOP.

b. Flight-following facilities, with a staff of qualified ATC personnel, shall provide communication and control of corridor feeder-route systems, choke points, crossing corridors, and transition areas in cantonment areas, training areas, and ranges. When required, these facilities provide altitude or other means of separation. In addition, they shall--

- Provide a common frequency.

- Issue advisories that allow pilots to separate their aircraft from other aircraft and activities or adverse weather that may endanger the aircraft.
- Monitor the flight progress of all participating aircraft within the facility's area of responsibility.
- Advise other area users of aircraft activity that may impact on or conflict with the mission or activity.
- Provide assistance during emergencies.
- Assist with search and rescue efforts as needed.

6-3. PROCEDURES

The procedures developed for conducting the day-to-day operation of a flight-following facility depend on a number of circumstances. Local requirements govern exact operational procedures. However, these procedures are influenced by the number and types of operating agencies and the activities in the facility area. Installations needing assistance in determining requirements for facility personnel and equipment shall submit a facility request through their MACOM to USAATCA. The procedures and requirements outlined below establish a minimum standard and shall apply to all Army flight-following facilities.

a. Each facility shall have an up-to-date map of its area of responsibility. Each map shall depict the following areas and routes:

- EOD/hazardous cargo route.
- Impact areas.
- Firing points.
- Navigational aids.
- ADIZ and no-fly areas.
- Prominent obstructions.
- NOE, NVG routes, and RPV routes.
- Mandatory reporting points.
- Radio and radar blind spots.
- IFR recovery airfields and landing areas.

- Restricted/prohibited areas.
- Aircraft entry and exit points.
- Changeover points.
- Corridors, transition areas, training areas, and ranges.
- The same grid system as other area ATC and search and rescue facilities.

b. The flight progress of participating aircraft shall be monitored, and the maximum time between position reports shall be 30 minutes. Less time may be required depending on the type, length, and area of some routes such as an NOE route.

c. The facility's area of responsibility shall be divided into as many subareas as necessary to simplify recognition and reporting. Each area shall be lettered, numbered, or named. The boundaries of these subareas, such as rivers, roads, and power lines, should be easily recognized from the air.

d. Procedures shall be developed to ensure the timely receipt and dissemination of area weather information. Each facility should be electronically connected to the same weather dissemination equipment as that in other area ATC facilities.

e. Procedures shall be developed between the flight-following facility and other area ATC facilities to ensure that timely control information is passed. Letters of agreement and operations letters shall establish procedures concerning hand-offs, control transfers, flight plans, and arrival and departure times.

f. The facility should have the capability of communicating with other ATC facilities and agencies that use or operate within the facility's area of responsibility. Standard ATC radio and interphone phraseology shall be used in all facility communications.

g. The facility's area and airspace is determined by local, host-nation, post, camp, or station requirements. The area and airspace may or may not contain a restricted or prohibited area, overlap, underlay or join another ATC facility's area or airspace. Whether a facility joins another ATC facility's area or airspace is determined by local requirements, equipment, and agreements. FAA Handbooks 7400.2 and 7610.4 contain additional information on the procedures for handling airspace matters and special military operations.

6-4. RECORDS

a. All Army flight-following facilities shall use FAA Form 7230-21 to record flight operations. Standard ATC control information symbols shall be used, and completed strips shall be maintained in the same manner as other ATC flight strips.

b. FAA Form 7230-21 (NSN 0052-00-628-7001) and the flight strip holder (NSN 6605-00-458-6649, Type 5) may be ordered from the Director, US Army Aeronautical Services Agency, ATTN: MOAS-AI, Cameron Station, Alexandria, VA 22304-5050.

c. Instructions for completing FAA Form 7230-21 are given below. The paragraph numbers correspond to the pertinent block numbers on the sample of a completed flight progress strip in Figure 6-1 (page 6-6).

(1) **Block 1.** Aircraft identification.

(2) **Block 2.** Type of aircraft and the equipment suffix used for any special equipment such as the DME transponder.

(3) **Block 3.** Altitude.

(4) **Block 4.** Beacon code.

(5) **Block 5.** Route or area of flight.

(6) **Block 6.** Radio or radar contact time in UTC.

(7) **Block 7.** Destination such as the training area or intended landing area.

(8) **Block 8.** ETA at the destination in UTC.

(9) **Block 9.** Coordination effected such as CRC, FCC, range control, and ADIZ.

(10) **Block 10.** Type mission; for example, NOE, NVG, and administrative.

(11) **Block 11.** Time of last radio contact and handoff information.

(12) **Block 12.** Time at reporting points.

(13) **Blocks 13 and 14.** Reporting points, amendments, clearances, and so forth that correspond to block 12. Blocks 13 and 14 can be changed or modified by the facility as necessary.

1. R 12345	2. UH1/T	3. 8	10. NOE	12.	13.	14.
4. 12ØØ	5. BLUE N		11. 1345	1315	B-1	
6. 13ØØ	7. R21Ø3	8. 1345	9. RANGE CONTROL	(214.Ø		
FAA FORM 7230-21 (4-75)						

Figure 6-1. Sample of a completed flight progress strip

CHAPTER 7

FACILITY TRAINING PROGRAM

The ATC Facility Training Program provides standardization and guidance in conducting facility training. The FTP guides newly assigned personnel through an established POI to become facility-rated and remain proficient.

7-1. PROGRAM OF INSTRUCTION

The FTP consists of three types of training, a facility training manual, four training phases, a test, and the appropriate evaluations. In addition to this training, the program shall include the knowledge and skill requirements in the FAR, Part 65.

7-2. TYPES OF TRAINING

a. Qualification. Newly assigned personnel receive qualification training before they can obtain a facility rating. This training also is given when new procedures are instituted or new ATC equipment is installed.

b. Proficiency. Facility-rated or PQ controllers are given proficiency training to remain current and proficient on ATC policies, procedures, and equipment. Although these controllers previously received this training, they need it on a recurring basis. The training includes weather certification and changes to Army regulations, field manuals, handbooks, and operational procedures.

c. Remedial. Remedial training shall be given only to personnel who have shown that they are no longer qualified to perform satisfactorily in a control position at which they previously qualified. This training, given to correct a demonstrated weakness, may consist of classroom instruction or additional time on the position under direct supervision or both. The ATC chief/ATC facility chief determines the time limits for the controllers' receiving the remedial training.

7-3. TRAINING PHASES

a. Indoctrination. All newly assigned personnel begin the FTP with this phase. The indoctrination training phase shall consist of--

- A briefing on what is expected of the trainee.

- An introduction to AR 95-2.
- A discussion of training time limits.
- Issuance of the FTM.
- A comprehensive review of Chapter 1 of the FTM and a general review of the remaining chapters.
- A review of the training schedule.
- A tour of the ATC facility and other airfield facilities and, if possible, a local orientation flight.
- A certificate of grades/ATCS verification.
- Current class II medical verification.
- A successful written or oral examination on Chapter 1 of the FTM. The trainee must complete the examination before entering the next phase.

b. Primary Knowledge.

(1) The trainee may take the primary knowledge phase in a classroom or at the facility while assigned to a shift. This phase teaches the general subjects that the trainee needs to begin training at each operating position. A written examination on Chapters 2, 3, and 4 of the FTM completes this phase.

(2) A current class IIA flight physical is required before the trainee enters the next phase.

c. Position Qualification.

(1) In this phase, the trainee receives hands-on training at each operating position and examinations on the FTM chapters that apply to the control procedures. The trainee is then evaluated on each operating position, and the results are recorded on DA Form 3479-l-R.

(2) Position qualification training should begin at the least complex control position and advance to the most complex. To become PQ at a control position, the trainee must complete all FTM chapters that apply to that position. He also must receive a satisfactory evaluation on DA Form 3479-l-R and, in the Remarks block, a recommendation from the SS that he become PQ. The ATC chief/ATC facility chief or training supervisor shall then evaluate the trainee to determine if he is qualified. In addition to the evaluation, the trainee may be given a written or an oral examination.

d. **Facility Rating.** After the trainee is PQ at all control positions, he shall be given a pre-FAA/ATCS facility rating examination. He shall be given a final FAA/ATCS facility rating examination and be evaluated on all operating positions pertaining to the rating. The results shall be recorded on DA Form 3479-l-R.

(1) Pre-FAA/ATCS examination. This examination should consist of 50 to 100 questions from the FTM, AIM, FAA Handbook 7110.65, LOA, operations letters, approach charts, FLIPs, SIDS, maps, and charts. The questions shall pertain only to those topics that the trainee must know to operate as a controller at the facility to which he is assigned. This examination presents the trainee with examples of the types of questions that are on the final FAA/ATCS written examination; it also may show him areas that he needs to review. If the trainee fails this examination, he shall return to classroom study and be rescheduled for the examination to be administered in approximately one week.

(2) Final FAA/ATCS facility rating examination. This examination shall consist of 50 to 100 questions on topics that the trainee must know to be a controller at the facility to which he is assigned.

(3) Facility rating evaluation. This evaluation, which is recorded on DA Form 3479-l-R, shall cover all operating positions pertaining to the rating. It should be conducted under normal traffic conditions.

7-4. ADMINISTRATION AND MANAGEMENT TRAINING

a. This training prepares personnel to progress from a controller to a facility chief. Management training is an ongoing program wherein supervisors continuously train subordinates to assume supervisory positions. Upon completion of the facility training, all personnel in grades E5 or GS-9 and controllers in other grades routinely performing duties as CIC shall receive training in facility administration and management. As a minimum, this training shall include those subjects listed in Chapter 13 of the FTM and a final examination.

b. Failure to satisfactorily complete this training shall not be used as a reason for reclassification action. The examination serves to point out weak areas so that the individual may improve his performance. The administrative management exam shall be administered within 30 days after an individual becomes facility-rated. If he receives an unsatisfactory score, he shall be administered the exam once every 30 days until he achieves a passing score. All test results shall be entered into the individual's training record.

7-5. FACILITY TRAINING MANUAL

a. The FTM is a locally prepared publication. The ATC chief/ATC facility chief is responsible for its preparation, content, and quality. The manual provides personnel with a logical step-by-step progression to becoming facility-rated. The quality of the FTM has a direct bearing on the effectiveness of a facility's training program.

b. The FTM is used for facility rating preparation and remedial and proficiency training. The manual also serves as a reference source. The charts, maps, photographs, and drawings in the FTM make the information more understandable.

c. At least three copies of the FTM shall be maintained at a facility. One copy is for the facility reference file; one, for the controller reference file; and one, for controllers to sign out. The facility may maintain any number of additional copies for controller use.

d. In Appendix A, Figure A-1 shows a detailed FTM subject outline for fixed-base facilities and Figure A-2 shows an abbreviated outline for tactical facilities. The chapters or portions of chapters in the FTM that do not apply to a particular facility may be marked "not applicable" or be used as determined by the ATC chief/ATC facility chief. The chief may choose to include those chapters that apply to a collocated or adjacent facility to familiarize controllers with that facility. However, trainees shall not be tested for record purposes on chapters that do not apply toward a facility rating.

7-6. FACILITY TRAINING SCHEDULE

a. Each ATC chief/ATC facility chief shall develop a facility training schedule for initial and subsequent ratings. The schedule gives the trainee, trainer, and SS a clear understanding of what the trainee is expected to learn and a reasonable amount of time in which to learn it. It also gives facility supervisors a means of effectively maintaining a trainee's progression through the FTP. The facility training schedule shall prescribe--

- A timetable for position qualification at each control position to include a recommended date for PQ.
- A time frame for each FTM chapter test.
- Those FTM chapter tests required before the trainee becomes PQ at each control position.

- The recommended date for position qualification.
- The recommended date of the pre-FAA/ATCS examination.
- The recommended date of the final FAA/ATCS examination.
- The recommended date of the facility rating.

b. Chapter tests do not have to be taken in sequence. However, trainees should begin training in the least complex control position. They may take chapter tests to become PQ as soon as their abilities indicate they are ready.

7-7. TRAINING AND PROFICIENCY RECORD - AIR TRAFFIC CONTROLLER

a. Each tactical and fixed-base ATC facility shall maintain a complete and current DA Form 3479-R for all military and civilian controllers. To accomplish this, one training folder shall be used with a divider separating the fixed-base records from the tactical. To avoid duplication, Sections I and II will be combined; the record will be maintained in the front of the folder. Tactical facilities are not required to take DA Forms 3479-R on short-term field exercises. Upon completion of the exercises, however, the facility must make the appropriate entries. DA Form 3479-R shall be used to document all ratings awarded and proficiency, qualification, and remedial training conducted during field exercises. A blank copy of this reproducible form is at the back of this manual.

b. DA Form 3479-R serves as a comprehensive record of training, certification, qualification, proficiency, ratings, and duty assignments. Figure 7-1 (page 7-6) explains the seven sections of this form.

SECTION	TITLE	ENTRIES
I	Personal Identifying Data	Assignments, certifications, and ratings.
II	Schools Attended	Names of ATC schools or courses (military and civilian) attended and dates of completion.
III	Qualification, Proficiency, and Remedial Training Record	The subject of the instruction presented, the appropriate code letter (Q - qualification, P - proficiency, R - remedial), the date training was completed, total hours of instruction, and remarks.
IV	Written/Oral/Practical Test Action	The subject tested, the date that the practical test was administered, the score received, the type of action (qualification or rating), and the remarks. (All written tests will be retained until a trainee is facility-rated. Thereafter, written tests shall be kept on file for one year from the date of the test.)
V	Proficiency Checks	The operating position in which the check is conducted, the date of the check, the score or rating received, the number of hours expended on the proficiency check, the sequenced number of the evaluation (for example, 92-4 indicates the fourth evaluation of 1992), the letters "PQ" when position-qualified, and comments in the Remarks column. (DA Form 3479-R will be used to record proficiency checks. All evaluations of a trainee shall be kept on file until the trainee is facility-rated. Thereafter, trainee/controller evaluations shall be kept on file for one year from the date of the evaluation.)
VI	Miscellaneous General Comments	Additional information pertaining to remarks in other sections, interview data, or comments that may affect the individual's career; for example, SAVES, training time extensions, awards, or letters of commendation.
VII	Individual Radar Record	The monthly record count of radar approaches conducted by the controller and, in the appropriate column, the type of approach and operation. This section shall be closed out the last day of each calendar year by entering the yearly total--the total to date (the total of all the previous year's approaches). This section applies only to radar facilities; however, it must be kept for all controllers once they start radar training. Whether approaches are simulated or monitored trainee approaches shall be noted in the Remarks section.

Figure 7-1. Explanation of DA Form 3479-R

(1) Preparation and maintenance.

(a) The ATC chief/ATC facility chief at all Army ATC facilities shall maintain DA Forms 3479-R on assigned or attached ATC specialists (military and civilian). A paper record on each controller shall be maintained in an area that is accessible only to authorized personnel.

(b) The record will be kept in a straight cut, 9 1/2- by 11 3/4-inch, heavy-duty kraft file folder (NSN 7530-00-222-3443). Each folder shall contain a label (per MARKS, AR 25-400-2) in the upper left corner with the controller's last name, first name, middle initial, and social security number. The folder shall be filed alphabetically by the controller's last name. The following information shall be entered on the front cover of the file folder: Air Traffic Controller Individual Training Records Folder, United States Army. If found, the folder shall be returned to the Commander, USAAVNC, ATTN: ATZQ-ATC-MO, Fort Rucker, AL 36362-5265. These folders will contain--

- DA Form 3479-l-R.
- Training received.
- Examination results.
- Current class IIA physical fitness examinations.
- Performance related to proficiency in ATC duties.
- Other correspondence related to training and ratings.
- DA Form 4186.
- Grades, ratings, and certifications obtained through training.

(c) When a controller is transferred, the ATC chief/ATC facility chief will close out Sections III through VI of the controller's DA Form 3479-R by signing and dating them. The individual will hand carry this record to the ATC chief/ATC facility chief or his designee at his next duty assignment.

(d) The left inside portion of the folder shall contain Sections I through VII of DA Form 3479-R. No other forms, records, or papers shall be retained on the left side of the folder. The right inside portion of the folder shall contain, from top to bottom, DA Forms 3479-l-R (latest on top); all written tests (latest on top) ; and DA Forms 4186. A DA Form 4186

used for grounding shall be placed on top of a DA Form 4186 issued by the flight surgeon to indicate a completed flight physical. The DA Form 4186 used for grounding shall be retained until the individual is returned to flight status; it is then removed from the training record.

(e) Only those forms and records listed in (d) above are to be retained with the DA Form 3479-R. Such information as training time extensions, reclassification, and counseling shall not be retained with DA Form 3479-R. However, remarks of these actions shall be entered in Section VI of the form.

(2) Availability. File folders are available to the individual controller upon request. They also will be made available to--

- USAATCA.
- Commanders.
- FAA authorities.
- Supervisors (training or shift).
- Aircraft accident and flight violation investigators.
- Systems managers and their authorized representatives.
- Military examiners who facility-rate the controller for duty.
- Other authorized individuals who request the folders in person from the record custodian or who submit written requests to system managers.

NOTE: Requests for files shall state the reason for the request; the intended use of the information; and the requester's name, military or civilian status, ATCS number, and duty location. Requests are approved by the ATC chief/ATC facility chief.

(3) Contests and appeals. Individuals may contest the contents of or appeal the entries to the DA Form 3479-R. The complaints shall be directed through channels to the Commander, USAAVNC, ATTN: ATZQ-ATC-MO, Fort Rucker, AL 36362-5265.

(4) Retention. These records are permanent and shall remain active while an individual is an air traffic controller. The records will be returned to the individual upon completion of reclassification actions, termination of service, and so forth.

7-8. TRAINEE/CONTROLLER EVALUATION

The DA Form 3479-l-R provides a written evaluation of an individual's training progress or job performance. It also provides a means for showing weak points that need to be corrected.

a. Preparation.

(1) The preparation of DA Form 3479-l-R is generally self-explanatory. Areas that require an explanation are detailed in the following paragraph. The form is used to record trainee/controller proficiency and qualification at all control positions. The evaluator shall make the appropriate entries and sign the form. These are important forms; therefore, they must be completed properly and on time.

(2) DA Form 3479-l-R shall be filled out as explained below. A blank copy of this reproducible form is at the back of this manual.

(a) NAME block. Self-explanatory.

(b) GRADE block. Self-explanatory.

(c) ATCS NUMBER block. Self-explanatory.

(d) EVALUATION NUMBER block. Leave blank. (The training supervisor assigns the number.)

(e) TYPE OF TRAINING block. Show the type of training/evaluation conducted.

(f) POSITION EVALUATED block. Self-explanatory.

(g) TRAINING MONTH block. Show the progressively numbered training month that the trainee/controller is on. (This block does not apply to proficiency evaluations.)

(h) SAT, NEEDS IMPROV, and UNSAT columns. Using evaluation factors A through H on the form, rate the trainee's/controller's performance according to the guidelines given below. Place a check mark in the appropriate column for items 1 through 29.

SAT. A check mark in this column indicates that the trainee/controller is performing at a level that is satisfactory for position qualification.

NEEDS IMPROVEMENT. A check mark in this column indicates that the trainee/controller is performing at a level that

is less than satisfactory for position qualification. However, he is at the level expected at this point in the training program. This column should be considered an extension of the SAT column. A check mark in this column indicates satisfactory training progress.

- **UNSAT.** A check mark in this column indicates that the trainee/controller is not performing at the level of competency expected at this point in the training program. Examples would be continued errors in the subject area with little or no improvement shown and failure to complete study assignments. Check marks in this column, though not extremely uncommon, should not be taken lightly nor considered normal. The instructor and the trainee should place additional emphasis on training in these areas.

(i) TRAFFIC CONDITION block. Self-explanatory.

(j) OVERALL RATING block. The overall rating is an indication of the trainee's progress in the training program. The instructor considers the amount of time the trainee has been on the position and where he would expect the trainee to have progressed at this point. Unlike items 1 through 29, which are rated against a PQ level of competency, the overall rating is the objective opinion of the instructor/evaluator. His opinion is based on such factors as past experience, training time limitations, and traffic and complexity levels. A trainee/controller who has areas marked SAT and NEEDS IMPROV but none marked UNSAT could receive a SAT overall rating. This would indicate that the trainee/controller is progressing satisfactorily but still needs additional training and experience to reach the PQ level of competency.

(k) EVALUATOR COMMENTS block. This block is probably the most important part of the evaluation form. The instructor should make detailed comments concerning the trainee's performance during the evaluation period, emphasizing those areas marked NEEDS IMPROV or UNSAT. The instructor should tailor his remarks specifically to the items so marked and provide examples of situations that led to the ratings. He should be specific and honest. The instructor's comments must substantiate the ratings given for items 1 through 29 and the overall rating. He should take the time to discuss each rating in depth with the trainee. Supervisors should allow sufficient time for the instructor and trainee to accomplish this in an undisturbed environment such as the breakroom or classroom. During the discussion, the instructor also should be sure to comment on the trainee's good points and accomplishments. Building a trainee's self-confidence is an integral part of the training program.

(l) **DATE, TYPED/PRINTED NAME AND GRADE, and SIGNATURE blocks.** All such blocks on the reverse side of the form are self-explanatory.

(m) **CONTROLLER/TRAINEE COMMENTS block.** Supervisors and instructors should encourage trainees to comment, for example, on their progress, the training program, and the instructor's technique. These comments are important, especially if the overall rating is UNSAT or the trainee disagrees with the evaluation.

(n) **REVIEWING AUTHORITY COMMENTS block.** The reviewing authority adds the appropriate comments.

b. **USE.**

(1) A single evaluation form may be used to evaluate the performance of a trainee/controller at more than one control position. However, an evaluation form shall not be used to show two different types of training. For example, a single form shall not be used to evaluate a trainee's proficiency at one position and qualification or remedial training at another.

(2) DA Form 3479-l-R provides a written evaluation of a rated PQ controller's ability to perform at a position. It also is used to evaluate a trainee's progress toward becoming PQ. If his proficiency or training progress is not satisfactory, the trainee/controller must be told why and what he must do to improve. This may include study assignments, oral or written tests, or extra time on a position. The ATC chief/ATC facility chief should use the results of trainee/controller evaluations to determine training trends, time extensions, and FTP modifications. DA Form 3479-l-R also is used to approve or disapprove reclassification requests.

c. **Frequency.** The supervisor determines when to conduct trainee/controller evaluations. As a minimum, these evaluations shall be conducted--

- Every 14 calendar days after a trainee begins position qualification training (Phase 3).
- Every 30 calendar days for each position at which a trainee is PQ.
- Every time a trainee is PQ.
- Before a trainee is recommended for a facility rating.
- To regain currency and proficiency.

d. Retention. Once signed by the reviewing authority, evaluations shall be placed on top of written tests and other evaluations and attached to the right inside portion of the DA Form 3479-R. The results of all evaluations shall be entered in Section V of the controller's training record. Evaluations shall be retained until the trainee is facility-rated; this includes the DA Form 3479-l-R for a facility rating. After the facility rating is completed, all evaluations shall be returned to the controller.

CHAPTER 8

TACTICAL AIR TRAFFIC SERVICES

This chapter provides administrative and operational standards, policies, and procedures peculiar to tactical ATS. It also establishes guidelines for US Army ATS units engaged in planning and conducting tactical/combat operations. However, this chapter does not waive the applicable requirements in other chapters of this manual. The influence of political, military, and geographical considerations is such that procedures must be tailored to each area and special situation. FMs 1-103, 100-28, 100-42, and 100-103; TMs 95-225 and 95-226; and FAA Handbook 7110.65 contain further guidance on tactical ATS.

8-1. PLANNING

a. When planning a tactical exercise, facilities must apply many host-nation rules and procedures. The DARR, USAASD-E commander, or Eighth Army ATC Office must be involved early to coordinate airspace requirements with the host nation's airspace planners. ATS personnel will assist in developing an effective A^2C^2 plan that will provide safe and effective use of airspace across the operational continuum.

b. The ATS unit must coordinate with the aviation unit responsible for aircraft participating in the operation. During the initial planning stage, these units must--

(1) Coordinate airspace use.

(2) Determine what LOA must be established.

(3) Select the equipment site.

(4) Perform initial TERPS of the airspace.

(5) Determine what additional services are available/required; for example, crash and POL.

c. During the exercise planning stage, a risk assessment must be conducted to accomplish risk management. This is a systematic process that helps leaders make informed decisions. The five major areas for risk assessment are fiscal, threat,

tactical doctrine, physical security, and safety. The leaders must complete the five steps given below to accomplish risk management.

(1) Identify risks.

(a) Make an operations analysis. This is simply a description, normally in time sequence, of the events that are expected to occur during the operation.

(b) Make a preliminary hazard analysis. This is a list of the various hazards that could occur and could result in accidents. It is developed using experience, the data base, and scenario thinking or similar techniques.

(c) If necessary, use a more in-depth hazard analysis. This analysis is normally used when time permits or when certain risks require more careful consideration to be fully understood.

(2) Assess risks. Assess the various risks to determine their relative probability and severity and their potential impact on the mission.

(3) Make decisions and develop controls.

(a) Develop risk control options, starting with the most serious risks.

(b) Complete a training realism assessment to assure the suitability of risk controls.

(c) Make risk decisions. Select risk controls that will reduce the risk to a practical minimum consistent with the mission objectives.

(4) Implement controls. Implement the risk control procedures. Implementation is best accomplished by integrating the procedures as standards in unit SOPs, orders, and training operations.

(5) Supervise. Maintain the effectiveness of risk controls by ensuring that risk control standards are as effective as expected and are kept at high levels.

8-2. RESPONSIBILITIES

a. Flight Operations Center. The FOC is responsible for en route control and coordination of Army and joint/combined air traffic operations. It also interfaces with USAF TACS on matters

concerning coordination of USAF flights below the coordinating altitude and Army flights above the coordinating altitude. The FOC is normally collocated with or electronically connected to the USAF CRC. The FOC responsibilities include--

(1) Search and rescue assistance to aircraft performing a SAR operation.

(2) Flight-following and navigational assistance.

(3) En route control on designated flight routes.

(4) Dissemination of critical A^2C^2 data.

(5) On-call or on-demand activation of en route NAVAIDS.

(6) Dissemination of current weather information.

(7) Dissemination of terminal airfield status.

b. Flight Coordination Center. The FCC is responsible for providing a communications extension for the FOC and for supporting the FOC in its coordination activities. The FCC receives and passes en route air traffic from the FOC or adjacent FCCS and issues weather reports.

c. Terminal Control Tower. The tower provides services similar to those in a fixed-base environment.

d. Ground-Controlled Approach. The GCA provides precision and nonprecision approaches. It also provides surveillance simultaneous vectoring and approach guidance for arrival and departure aircraft operating within the terminal area.

e. Tactical Aviation Control Team. The TACT is responsible for operations at forward support and austere landing locations. The TACT can be organized in several configurations, using from two to four soldiers equipped with a manpack data/secure voice communications package.

f. ATS A^2C^2 Liaison. Liaison personnel are responsible for assisting the ACA in establishing and maintaining the Army airspace command and control system. This A^2C^2 system is linked with the ACA by communications, standardized procedures, acquisition systems, and liaison. The A^2C^2 element in the area of operations--

(1) Coordinates and integrates airspace use.

(2) Coordinates airspace with other users.

(3) Maintains ATS overlays within the command post.

(4) Assists in developing and maintaining the airspace utilization map.

(5) Staffs requests for special-use airspace.

(6) Identifies and resolves conflicts between airspace users.

(7) Develops plans, procedures, and SOPs and disseminates them to appropriate agencies.

(8) Advises higher headquarters and subordinate units of significant airspace activities and the impact that airspace C^2 will have on operations.

(9) Disseminates information concerning enemy air defense.

(10) Coordinates selected identification requirements and IFF procedures for Army aircraft.

(11) Coordinates and disseminates information about and changes in coordinating altitude.

(12) Coordinates requirements for flight plans, air defense, and airspace control measures.

(13) Maintains and disseminates the location and status of airfields, NAVAIDs, LZs, and PZs in the area of operations.

(14) Coordinates requirements for airfield terminal control zones and other A^2C^2 elements.

(15) Coordinates and disseminates ATS and AD procedures to be used by aviation units.

(16) Maintains and disseminates ACM information.

8-3. PROCEDURES

a. <u>NAVAIDs.</u> The procedures contained in TM 95-226 shall be used to construct a precision or nonprecision approach that will service the terminal area. The en route criteria shall be as established by the ACA. Critical information about tactical approach procedures at instrumented heliports and airfields must be developed by the sector responsible for the approach. This information must then be disseminated to the aviation units, FCC/FOC, and appropriate A^2C^2 elements for inclusion in the ACO.

The Tactical Approach Publications System form, explained in paragraph 8-9c, is the primary method of accomplishing this.

b. Flight Check. All NAVAIDs must pass an FAA flight check inspection before IFR operations are conducted. The only personnel authorized to perform IFR certifications are graduates of the FAA Flight Inspection Course. The following actions are recommended to prepare for a flight check:

(1) Assign the best-qualified controller available.

(2) Complete a TERPS package and formulate dial divisions for the radar and provide them to flight check personnel.

(3) Establish communications on a single dedicated frequency.

(4) Note that the usable distance for radar cover capable of detecting an aircraft is a minimum of 7.5 NM from touchdown within the azimuth and elevation sector portrayed on the radar scope. Record only "on glide path" calls. Do not record calls taken inside of the decision height.

(5) For repeatability, have three approaches for each runway/landing area.

(6) Give the range at least every mile so that range mark accuracy can be evaluated.

(7) Develop an LOA concerning the airspace used for the approach procedure.

(8) Have personnel who are trained/experienced in theodolite operations (see Appendix D).

(9) Ensure that ground personnel are familiar with TM 95-225.

8-4. TACTICAL AIR TRAFFIC CONTROLLERS' QUALIFICATION AND RATING PROGRAM

The TATC qualification and rating program explains and standardizes the training of personnel for tactical qualification and certification as outlined in AR 95-2 and this manual. Tactical ATCS examiners will be appointed by USAATCA per AR 95-2. This training shall be in two phases--qualification training and rating.

a. <u>Phase 1 - Qualification Training.</u> This phase consists of individual and team training on the installation, operation, and maintenance of all equipment associated with the ATC system to which the controller will be assigned; for example, AN/TSW-7A or AN/TSQ-61B.

(1) Tasks, conditions, and standards for equipment training shall be taken from the battle drills for ATC teams in ARTEP l-227-10-Drill.

(2) The unit shall determine the amount and type of A^2C^2 training.

(3) Controllers will be trained in ATC procedures, rules, and standard phraseology.

(4) Controllers shall begin this training within 60 days of assignment or within 60 days of completion of a fixed-base program. Active-duty controllers shall complete the training within four calendar months from the date they enter the program and reserve component controllers, within two annual training periods. (A controller shall not be entered into a fixed-base training program and a tactical program at the same time).

b. <u>Phase II - Rating.</u> This phase covers the ability of trainees to control air traffic in a tactical environment.

(1) A tactical examiner shall give the rating in each facility. The examiner shall administer a written or an oral examination that covers the applicable chapters of the FTM.

(2) The examiner shall give an over-the-shoulder evaluation using DA Form 3479-l-R.

(3) The examiner shall annotate the initial rating of tactically certified on the back of the controller's air traffic controller specialist card and on page 1 of DA Form 3479-l-R.

(4) Each time the controller is deployed to provide air traffic services after the initial rating, he must be given a written or an oral proficiency check for the applicable portions of the tactical FTM. The rating shall be recorded in Section III of DA Form 3479-l-R. When reassigned to a new unit or a different type of facility, the controller must complete the rating program for that unit or facility.

8-5. EQUIPMENT CHECKS

The ATC chief/ATC facility chief will ensure that appropriate checks are performed per the applicable technical manuals and Chapter 3 of this manual.

8-6. TOWER, RADAR, NAVAID, AND FOC/FCC SERVICES

a. Tower. Tower services will be provided as required. Primary weather information will be provided by the USAF weather detachment serving that facility. USAF weather support is normally located at corps or division level. If no USAF weather detachment is available, direct readings from wind and altimeter instruments will be issued as "estimated."

b. Radar. Before authorizing the use of a tactical GCA to control traffic at a landing site or an area airfield, commanders shall establish specific procedures. The radar set must be operational, properly sited per the appropriate technical manual, and flight checked if used for IFR operations. Commanders also are responsible for flight checks when a particular procedure must be used during IMC. The required coordination and approval must be obtained from the appropriate authority for airspace usage.

c. Navigational Aids. The SS shall ensure that periodic checks of NAVAIDs are performed and the results are recorded on DA Form 3502-R.

d. FOC/FCC. FOC/FCC services are provided as required. At the beginning of each shift, the FOC/FCC shall obtain a time check from the appropriate CRC/CRP and each facility shall ensure that all means of communication are operational. If the FOC becomes inoperable, its functions and responsibilities shall be assumed by a designated FCC.

8-7. DEPLOYMENT AND EMPLOYMENT

Each ATS commander shall designate qualified movement control teams to plan and execute air and ground movements. Vehicle loading plans and convoy procedures must be developed for each deployable element. The appropriate ARTEP manual contains additional information on deployment.

8-8. REFERENCE MATERIAL

a. Charts and Maps. Each facility shall have an up-to-date map of its area of responsibility (as applicable). Each map shall depict the--

- Impact areas.
- Firing points.
- Navigational aids.
- ADIZ and no-fly areas.
- IFR recovery airfields.
- Prominent obstructions.
- NOE, NVS, and RPV routes.
- EOD/hazardous cargo route.
- Mandatory reporting points.
- Radio and radar blind spots.
- Restricted/prohibited areas.
- Aircraft entry, exit, and changeover points.
- Corridors, transition areas, training areas, and ranges.
- The same grid system as other area ATC and search and rescue facilities.

b. Reference File. The section chief/platoon sergeant is responsible for maintaining a facility/platoon reference file per Chapter 4 and Appendix B.

8-9. TACTICAL APPROACH PUBLICATIONS SYSTEM

a. Critical information about tactical approach procedures at instrumented heliports and airfields must be distributed to aviators. The ATS LO shall ensure that TERPS and any other critical information are included in the ACO as a complement to the ATO.

b. The platoon sergeant or designated ATC chief/ATC facility chief will develop T/SIPs and apply the TERPS in TM 95-226 to obstacle clearance criteria. He also is responsible for preparing TAPS messages and distributing them to the ATS battalion TOC. The messages must be prepared accurately and sent by the most expeditious means. Some information in the TAPS message may be classified and shall be transmitted and handled as such. A copy of each message shall be forwarded to the ATS LO of the airspace management element to be further disseminated to participating aviation units.

c. DA Form 3479-8-R shall be completed as explained below. A blank copy of this reproducible form is at the back of this manual.

(1) **Line 1.** Enter the airfield coordinates.

(2) **Line 2.** Self-explanatory.

(3) **Line 3.** Enter the SOI version or item number.

(4) **Line 4.** Self-explanatory.

(5) **Line 5.** Enter the final approach course to the NDB.

(6) **Line 6.** Self-explanatory.

(7) **Line 7.** See TM 95-226.

(8) **Lines 7A and 7B.** Self-explanatory.

(9) **Lines 8 and 9.** See TM 95-226.

(10) **Line 10.** Enter the height or MDA above the landing area (visibility requirement).

(11) **Line 11.** Enter the geographic location of the landing area; for example, north or southwest.

(12) **Line 12.** Enter the landing area distance from the NDB in feet. (If the distance is off the airport, use miles and fractions of miles.)

(13) **Line 13.** Enter the SOI version or item number.

(14) **Line 14.** Self-explanatory.

(15) **Line 15.** Enter the final approach no-wind heading.

(16) **Line 16.** Self-explanatory.

(17) **Line 17.** Enter the decision height above TDZE (visibility requirement).

(18) **Line 18.** Enter the type of airport lighting.

(19) **Line 19.** Enter the missed approach point (as needed). This line may be used--

- To prescribe factors for standard NDB approaches.
- To report the status of flight checks.
- To issue special warnings such as obstructions in the airport area.

(20) **Line 20.** Self-explanatory.

APPENDIX A

FACILITY TRAINING MANUALS

Figure A-1 shows a detailed subject outline for an FTM that each facility shall develop. Figure A-2 shows an abbreviated outline for a tactical facility FTM. The outlines cover indoctrination, equipment, responsibilities, and emergency equipment and notification procedures. They also cover local area information, reference material, coordination procedures, and facility administration and management. (A facility will use only those portions of the abbreviated outline that pertain to that facility.)

CHAPTER 1

FIXED-BASE FACILITY INDOCTRINATION

1-1. MISSION

1-2. ATC FACILITY

a. Operating Hours and Reporting Time.

b. Duty Schedule.

c. Preduty Requirements.

(1) Bulletin boards.

(2) Reading file.

(3) Equipment checks.

(4) Briefings.

d. Duty Requirements.

(1) Briefings.

(2) Facility cleanup.

Figure A-1. Detailed outline for a facility training manual

e. Training Program.

(1) Description.

(2) Type (classroom, hands-on, and so forth).

(3) Written, oral, and practical exams.

(4) Training time limitation (AR 95-2).

(5) Facility training schedule.

f. Controller Reference File.

(1) Contents.

(2) Location.

g. Facility Reference File.

(1) Contents.

(2) Location.

1-3. GENERAL DESCRIPTION OF ASSOCIATED FACILITIES

a. Weather.

b. Base Operations.

c. Dispatch.

d. Other ATC Facilities.

e. Range Control.

f. Fire Station.

g. Alert Sections.

1-4. TRAINING RECORDS

a. Use.

Figure A-1. Detailed outline for a facility training manual (continued)

b. Location.

c. Access.

1-5. ELECTRONIC WARFARE TRAINING

a. Threat Briefing.

b. Equipment Vulnerabilities.

c. Electronic Countermeasures.

d. Recognition of Electronic Countermeasures and Appropriate Electronic Counter-Countermeasures.

e. MIJI Reporting.

1-6. FACILITY FORMS

CHAPTER 2

AIR TRAFFIC CONTROL FACILITY EQUIPMENT

2-1. RADIO COMMUNICATIONS EQUIPMENT

a. Transmitters.

(1) Type.

(2) Location.

b. Receivers.

(1) Type.

(2) Location.

c. Frequencies.

d. Channelization.

e. Standby Communications Equipment.

Figure A-1. Detailed outline for a facility training manual (continued)

f. Secure Voice Operation.

g. Maintenance and Outage.

2-2. LAND-LINE COMMUNICATIONS EQUIPMENT

a. Interphone.

(1) Type.

(2) Location.

(3) Use.

(4) Circuit identification.

(5) Maintenance and outage.

b. Telephones.

c. Intercommunication Units.

(1) Type.

(2) Location.

(3) Use.

(4) Maintenance and outage.

d. Weather Dissemination.

(1) Type.

(2) Location.

(3) Use.

(4) Maintenance.

e. Automation Equipment.

(1) Type.

Figure A-1. Detailed outline for a facility training manual (continued)

(2) Location.

(3) Use.

(4) Maintenance and outage.

2-3. RECORDING EQUIPMENT

a. Type.

b. Location.

c. Positions/Frequencies Recorded.

d. Tape Change Procedures.

e. Marking and Storing Procedures.

f. Playback.

g. Maintenance and Outage.

2-4. BRIGHT RADAR INDICATOR TOWER EQUIPMENT

a. Operation and Use.

b. Automation Procedures.

2-5. AIRFIELD/HELIPORT LIGHTING

a. Control Panel.

b. Runway and Helipad.

c. Threshold.

d. Boundary.

e. Approach.

f. Taxiway.

g. Rotating Beacon.

Figure A-1. Detailed outline for a facility training manual (continued)

h. Obstruction.

i. Wind-Direction Indicator.

j. Runway Directional.

k. Spotlights.

l. Ramp.

m. Maintenance and Outage.

n. Other.

2-6. MONITORING EQUIPMENT

a. Equipment Monitored.

b. Operational Checks.

c. Maintenance Checks.

2-7. AUTOMATIC TERMINAL INFORMATION SERVICE

a. Use.

b. Operational Procedures.

c. Message Content and Sequence.

d. Maintenance and Outage.

2-8. MISCELLANEOUS EQUIPMENT

a. Light Guns.

b. Traffic Counters.

c. Binoculars.

d. Wind Instruments.

e. Altimeters.

Figure A-1. Detailed outline for a facility training manual (continued)

f. Clocks.

(1) Time check.

(2) Setting procedure.

g. First Aid Kits.

h. Fire Extinguisher.

i. Fuse Boxes.

j. Heating and Cooling Equipment.

k. Emergency Power.

l. Sky Genie.

m. Night Vision Goggles.

n. Maintenance and Outages.

2-9. OPERATOR MAINTENANCE OF FACILITY EQUIPMENT

2-10. NOTICE TO AIRMEN

a. Responsible Agency.

b. Equipment Outages Requiring a NOTAM.

c. Controller Action.

CHAPTER 3

RESPONSIBILITIES

3-1. OPERATING POSITIONS

a. Control Tower.

(1) Flight data.

(2) Ground control.

Figure A-1. Detailed outline for a facility training manual (continued)

(3) Local control.

(4) Clearance delivery.

(5) Approach control.

(6) Combined positions.

(7) Others.

b. GCA.

(1) Feeder.

(2) Flight data.

(3) Final.

c. ARAC.

(1) Flight data.

(2) Arrival.

(3) Departure.

(4) PAR.

(5) Other.

d. FOC/FCC.

(1) Flight data.

(2) Flight-following control.

(3) Other.

e. Army Flight-Following Service.

(1) Flight data.

(2) Flight-following control.

(3) Other.

Figure A-1. Detailed outline for a facility training manual (continued)

3-2. SUPERVISORS

a. Controller-in-Charge.

b. Shift Supervisor.

c. Training Supervisor.

d. Facility Chief.

e. ATC Chief.

CHAPTER 4

LOCAL AIRPORT/HELIPORT INFORMATION

4-1. AIRPORT/HELIPORT

a. Responsible Agency.

b. Layout.

(1) Runways.

(a) Width.

(b) Length.

(c) Weight restrictions.

(d) Preferential runway.

(2) Other landing areas.

(3) Taxiways.

(a) Width.

(b) Weight restrictions.

(4) Ramp area.

(a) Hangar locations.

Figure A-1. Detailed outline for a facility training manual (continued)

(b) Parking areas.

(c) Taxi restrictions.

(d) Servicing areas.

(5) Services available.

(6) Airport boundaries.

(7) Crash standby points.

4-2. TOWER VISIBILITY RESTRICTIONS

4-3. ILS-CRITICAL AREAS

4-4. RADIO BLIND SPOTS

4-5. COMPASS ROSE

4-6. VOR RECEIVER CHECKPOINTS

4-7. AIRPORT/HELIPORT OBSTRUCTIONS

a. Bearing.

b. Height.

c. Distance.

4-8. TRAFFIC PATTERNS

4-9. VFR REPORTING POINTS

a. Bearing.

b. Distance.

4-10. SPECIAL VISUAL FLIGHT RULES

a. Minimums.

b. Routes.

Figure A-1. Detailed outline for a facility training manual (continued)

c. Reporting Points.

4-11. LOCAL AIRPORT/HELIPORT RULES AND REGULATIONS

a. Taxi Regulations.

b. Terminal Procedures.

(1) Medical evacuation.

(2) NVG.

(3) VIPs.

(4) Hot refueling.

(5) Aircraft types and call signs.

c. Hazardous Cargo.

d. Emergency Equipment Location.

e. Restricted Aircraft Movement.

f. Airfield Security.

g. Noise Abatement.

h. Launch and Recovery Procedures.

i. Autorotation.

(1) Procedures.

(2) Areas.

4-12. AIRCRAFT OPERATIONS

a. Scheduled Air Carriers.

b. Nonscheduled Operations.

c. Military Operations.

Figure A-1. Detailed outline for a facility training manual (continued)

d. General Aviation Operations.

4-13. WEATHER REPORTING PROCEDURES

a. Responsible Agency.

b. Visibility Checkpoints.

(1) Day.

(a) Bearing.

(b) Distance.

(2) Night.

(a) Bearing.

(b) Distance.

c. Nearest Weather Reporting Facilities.

d. Pilot Reports.

e. Weather Warnings.

f. High-Wind Plan.

4-14. UNAUTHORIZED PERSONNEL AND VEHICLES

a. Reporting.

b. Recording Incidents.

CHAPTER 5

EMERGENCY EQUIPMENT AND NOTIFICATION PROCEDURES

5-1. AVAILABLE EQUIPMENT

a. Ambulance.

Figure A-1. Detailed outline for a facility training manual (continued)

b. Fire-Fighting Equipment.

c. Rescue Equipment.

(1) Helicopter.

(2) Other.

5-2. EMERGENCY NOTIFICATION PROCEDURES

a. Primary Crash Alarm.

b. Secondary Alarm System.

5-3. FACILITY ACTIONS

a. Controllers.

(1) Position responsibilities.

(2) Closing and opening the airfield.

(3) Foaming runways.

(4) Required reports.

b. Fire-Fighting Personnel and Equipment.

c. Medical Personnel and Equipment.

d. Military Police.

5-4. INCIDENTS AND ACCIDENTS

a. On the Airfield.

b. Off the Airfield.

c. Information Sources.

d. Primary Reporting Procedures.

e. Format and Recording of Reports.

Figure A-1. Detailed outline for a facility training manual (continued)

CHAPTER 6

LOCAL AREA INFORMATION

6-1. CONTROL AREA (RADAR)

a. Boundaries.

b. Altitudes.

c. Airways.

d. Adjacent Areas.

6-2. CONTROL ZONE

a. Dimensions and Descriptions.

b. Adjacent Control Zones.

6-3. AIRPORT TRAFFIC AREA

a. Boundaries.

b. Users.

6-4. NAVIGATIONAL AIDS

a. Type.

b. Location.

c. Identification.

d. Airways.

6-5. PROMINENT OBJECTS AND OBSTRUCTIONS

a. Bearing.

b. Height.

c. Distance.

Figure A-1. Detailed outline for a facility training manual (continued)

6-6. RESTRICTED AND PROHIBITED AREAS

a. Location.

(1) Boundaries.

(2) Altitudes.

(3) Controlling agency.

b. Use.

c. Remotely Piloted Vehicles.

(1) Area.

(2) Procedure.

d. Nap of the Earth.

(1) Area.

(2) Procedure.

e. Night Vision Goggles.

(1) Area.

(2) Procedure.

f. IFR/VFR Corridors.

g. Airstrips.

(1) Location.

(2) Use.

6-7. VFR TRAINING AREAS

6-8. ADJACENT AIRPORTS/HELIPORTS

6-9. PARACHUTE AREAS

Figure A-1. Detailed outline for a facility training manual (continued)

CHAPTER 7

LETTERS, MEMORANDA, REPORTS, AND FORMS

7-1. LETTERS OF AGREEMENT

a. Agencies.

b. General Contents.

7-2. OPERATIONS LETTERS

a. Agencies.

b. General Contents.

7-3. FACILITY MEMORANDA

7-4. OPERATIONAL HAZARD REPORTS

a. Preparation.

b. Submission.

7-5. SECURITY CONTROL OF AIR TRAFFIC/AIR NAVIGATIONAL AIDS

a. Purpose.

b. Receipt of Notice.

c. Implementation Procedures.

d. Records and Forms.

CHAPTER 8

FLIGHT PLANS, STRIPS, AND MARKINGS

8-1. FLIGHT PLANS

a. Types.

b. Requirements.

Figure A-1. Detailed outline for a facility training manual (continued)

c. Local Filing.

d. In-Flight Filing.

e. Action Upon Receipt.

(1) IFR.

(2) VFR.

(3) SVFR.

f. Procedures.

(1) Forwarding information.

(2) Flight plan changes (IFR to VFR).

8-2. FLIGHT STRIPS

a. Marking.

b. Storage and Retention.

CHAPTER 9

INSTRUMENT FLIGHT RULES AND COORDINATION PROCEDURES

9-1. APPROACH PROCEDURES

a. Initial Approach Altitudes.

b. Holding Patterns.

(1) Location.

(2) Description.

c. Procedure Turn.

d. Final Approach Altitude and Heading.

e. Release Points.

Figure A-1. Detailed outline for a facility training manual (continued)

f. Missed-Approach Procedures.

g. Weather Minimums.

9-2. DEPARTURE PROCEDURES

a. Routes.

(1) SIDs.

(2) Transitions.

b. Altitudes Between Fixes and Intersections.

(1) Normal assigned frequencies.

(2) Minimum en route altitudes.

9-3. COORDINATION PROCEDURES

a. Interposition.

b. Local Facilities.

c. ARTCC.

d. Adjacent Airports.

9-4. VERTICAL HELICOPTER IFR RECOVERY PROCEDURES

9-5. MULTIPLE EMERGENCIES HANDOFF PROCEDURES, FREQUENCY MANAGEMENT, COORDINATION PROCEDURES, ABBREVIATED (SHORT) APPROACHES, AND SEQUENCING AND SEPARATION STANDARDS

CHAPTER 10

SECONDARY RADAR

10-1. COMPONENTS

a. Interrogator.

b. Transponder.

Figure A-1. Detailed outline for a facility training manual (continued)

c. Decoder.

10-2. TYPE OF EQUIPMENT (AN/TPX-41 AND ATCBI-3)

10-3. PRESENTATIONS

a. Factors.

(1) Line of sight.

(2) Aircraft altitude.

(3) Reflections.

(4) Resolution.

(5) Ring-around.

(6) Slant range.

b. Interface.

c. Others.

10-4. CODE ASSIGNMENTS

a. Facility.

b. Adjacent Facility.

c. Emergency.

CHAPTER 11

RADAR

11-1. EQUIPMENT

a. Type.

b. Display.

c. Alignment and Adjustment.

Figure A-1. Detailed outline for a facility training manual (continued)

d. Characteristics.

e. Keyboard.

f. Computer.

g. Radar Coverage.

h. Simulators.

11-2. MINIMA

a. MVA.

b. MSA.

c. MRA.

d. SVFR.

11-3. USE

(This paragraph was left blank intentionally. The ATC chief/ ATC facility chief may use it to expound on or refer to radar use, services, separation, sequencing, and phraseology contained in FAA Handbook 7110.65. All Army radar controllers are required to know and use the applicable radar procedures in the handbook. For purposes of testing, training, proficiency, and record keeping, Chapter 5 of FAA Handbook 7110.65 shall be considered an extension of this manual.)

CHAPTER 12

FACILITY ADMINISTRATION

12-1. DAILY ADMINISTRATION

a. Compiling Traffic Count.

b. Recording Traffic Count.

c. Maintaining Facility Forms and Records.

d. Filing Facility Forms and Records.

Figure A-1. Detailed outline for a facility training manual (continued)

12-2. STORING OF RECORDS

a. Labels.

b. Storage Area.

c. Retention.

12-3. DISSEMINATION OF INFORMATION

a. Accidents and Incidents.

b. Numbers and Types of Aircraft.

c. Types and Capabilities of Equipment.

d. Personnel.

e. Operations.

f. Others.

CHAPTER 13

ATC MANAGEMENT TRAINING

13-1. ADMINISTRATION

13-2. FACILITY REPORTS

13-3. OPERATIONAL HAZARD REPORTS

13-4. ACCIDENTS OR INCIDENTS

13-5. FLIGHT INSPECTION PROCEDURES

13-6. TRAINING RECORDS AND TRAINING PROGRAMS

13-7. ADMINISTRATION OF FACILITY QUALIFICATION AND RATING PROGRAM

13-8. ARMY REGULATIONS

13-9. OPERATIONS LETTERS, LETTERS OF AGREEMENT, AND FACILITY MEMORANDA

Figure A-1. Detailed outline for a facility training manual (continued)

CHAPTER 1

TACTICAL FACILITY INDOCTRINATION

1-1. MISSION

1-2. ATC FACILITIES

1-3. GENERAL DESCRIPTION OF ASSOCIATED OR SUPPORTED UNITS

1-4. TRAINING RECORDS

1-5. ELECTRONIC WARFARE TRAINING

1-6. DA FORMS 3501-R, 3502-R, AND 3503-R

CHAPTER 2

AIR TRAFFIC CONTROL FACILITY EQUIPMENT

2-1. RADIO COMMUNICATIONS EQUIPMENT

2-2. LAND-LINE COMMUNICATIONS EQUIPMENT

2-3. POWER GENERATION EQUIPMENT

2-4. NAVIGATIONAL EQUIPMENT

2-5. AIRFIELD/HELIPORT LIGHTING

2-6. MISCELLANEOUS EQUIPMENT

2-7. EQUIPMENT MAINTENANCE

CHAPTER 3

RESPONSIBILITIES

3-1. CONTROL TOWER (7A OR 70A)

3-2. TACTICAL TOWER TEAM (TSQ-97)

Figure A-2. Abbreviated outline for a tactical facility training manual

3-3. GCA TEAM (71B)

3-4. FLIGHT FOLLOWING (61B)

3-5. SUPERVISOR

CHAPTER 4

LOCAL AIRFIELD/HELIPORT AND AREA INFORMATION

4-1. AIRFIELD/HELIPORT LOCATION

4-2. VISIBILITY RESTRICTIONS

4-3. RADIO RESTRICTIONS

4-4. AIRFIELD/HELIPORT OBSTRUCTIONS

4-5. TRAFFIC PATTERNS

4-6. VFR REPORTING POINTS

4-7. LOCAL RULES AND REGULATIONS

4-8. WEATHER REPORTING PROCEDURES

CHAPTER 5

EMERGENCY EQUIPMENT AND NOTIFICATION PROCEDURES

5-1. AVAILABLE EQUIPMENT

5-2. EMERGENCY NOTIFICATION PROCEDURES

5-3. FACILITY ACTIONS

5-4. INCIDENTS AND ACCIDENTS

Figure A-2. Abbreviated outline for a tactical facility training manual (continued)

CHAPTER 6

LOCAL AREA INFORMATION

6-1. CONTROL ZONE

6-2. AIRPORT TRAFFIC AREA

6-3. NAVIGATIONAL AIDS

6-4. PROMINENT OBSTRUCTIONS

6-5. RESTRICTED AND PROHIBITED AREAS

6-6. ADJACENT AIRFIELDS/HELIPORTS

CHAPTER 7

LETTERS, MEMORANDA, REPORTS, AND FORMS

7-1. LETTERS OF AGREEMENT

7-2. OPERATIONS LETTERS

7-3. FACILITY MEMORANDA

7-4. OPERATIONAL HAZARD REPORTS

CHAPTER 8

FLIGHT PLANS, STRIPS, AND MARKINGS

8-1. FLIGHT PLANS

8-2. FLIGHT STRIPS AND MARKINGS

CHAPTER 9

INSTRUMENT FLIGHT RULES AND COORDINATION PROCEDURES

9-1. APPROACH PROCEDURES

Figure A-2. Abbreviated outline for a tactical facility training manual (continued)

9-2. DEPARTURE PROCEDURES

9-3. COORDINATION PROCEDURES

9-4. VERTICAL HELICOPTER IFR RECOVERY PROCEDURES

9-5. MULTIPLE EMERGENCIES HANDOFF PROCEDURES, FREQUENCY MANAGEMENT, COORDINATION PROCEDURES, ABBREVIATED (SHORT) APPROACHES, AND SEQUENCING AND SEPARATION STANDARDS

CHAPTER 10

SECONDARY RADAR

10-1. COMPONENTS

10-2. TYPE OF EQUIPMENT

10-3. CODE ASSIGNMENTS

CHAPTER 11

RADAR

11-1. EQUIPMENT

11-2. MINIMA

11-3. USE

CHAPTER 12

FACILITY ADMINISTRATION

12-1. FACILITY OPERATING FORMS

12-2. STORING OF RECORDS

12-3. DISSEMINATION OF INFORMATION

Figure A-2. Abbreviated outline for a tactical facility training manual (continued)

CHAPTER 13

ATC MANAGEMENT TRAINING

13-1. ADMINISTRATION

13-2. FACILITY REPORTS

13-3. OPERATIONAL HAZARD REPORTS

13-4. ACCIDENTS AND INCIDENTS

13-5. FLIGHT INSPECTION PROCEDURES

13-6. TRAINING RECORDS AND TRAINING PROGRAMS

13-7. ADMINISTRATION OF FACILITY QUALIFICATION AND RATING PROGRAM

13-8. ARMY REGULATIONS

13-9. OPERATIONS LETTERS, LETTERS OF AGREEMENT, AND FACILITY MEMORANDA

13-10. TERPS

Figure A-2. Abbreviated outline for a tactical facility training manual (continued)

APPENDIX B

PUBLICATION REFERENCE FILES

Section I. Publications Required for ATC Facilities and A^2C^2 Elements

ATC facilities use two types of reference files to support training and daily operations. A facility reference file is maintained in the office of the ATC chief/ATC facility chief and in the company/platoon headquarters. (A single reference file may be used for dual facilities.) The controller reference file, which is maintained in the ATC facility, is readily available to the facility operating positions. The facility and controller reference files are explained in Chapter 4. Figures B-1 through B-5 list the publications that are required for both types of reference files. An X in the reference file columns indicates that the publication is required for that file. Figure B-6 lists the publications required for A^2C^2 elements.

VFR/IFR TOWERS AND FIXED-BASE STAGEFIELDS

PUBLICATION	FACILITY REFERENCE FILE	CONTROLLER REFERENCE FILE
Army Regulations		
AR 25-50	X	
AR 40-8	X	
AR 40-501	X	
AR 95-2	X	X
AR 95-3	X	
AR 95-21	X	
AR 385-95	X	
AR 420-90	X	

Figure B-1. Publications for VFR/IFR towers and fixed-base stagefields

PUBLICATION	FACILITY REFERENCE FILE	CONTROLLER REFERENCE FILE
DOD FLIPs (for applicable area of coverage)		
Low Altitude Instrument Approach Procedures	X	X
Charts	X	X
IFR Supplement	X	X
VFR Supplement	X	X
FAA Publications		
FAA Handbook 7110.65	X	X
FAA Handbook 7210.3	X	
FAA Order 7220.1	X	X
FAA Handbook 7340.1		X
FAA Handbook 7350.5		X
Federal Aviation Regulations (CONUS only)		
FAR, Part 65	X	
FAR, Part 105	X	
Field Manuals		
FM 1-103	X	X
FM 1-303	X	X

Figure B-1. Publications for VFR/IFR towers and fixed-base stagefields (continued)

PUBLICATION	FACILITY REFERENCE FILE	CONTROLLER REFERENCE FILE
ICAO Manual (OCONUS only)		
ICAO Manual 7910		X
Technical Bulletin		
TB 95-1	X	
Technical Manuals		
TM 95-225	X	
TM 95-226	X	

NOTE: Operator's manuals are required for the equipment authorized in each unit and shall be maintained in the controller reference file.

Figure B-1. Publications for VFR/IFR towers and fixed-base stagefields (continued)

RADAR FACILITIES

PUBLICATION	FACILITY REFERENCE FILE	CONTROLLER REFERENCE FILE
Army Regulations		
AR 25-50	X	X
AR 40-8	X	
AR 40-501	X	
AR 95-2	X	X
AR 95-3	X	
AR 95-21		X
AR 385-95	X	
DOD FLIPs (for applicable area of coverage)		
Low Altitude Instrument Approach Procedures	X	X
Charts	X	X
IFR Supplement	X	X
VFR Supplement	X	X
FAA Publications		
FAA Handbook 7110.65	X	
FAA Handbook 7210.3	X	
FAA Order 7220.1	X	
FAA Handbook 7340.1		X
FAA Handbook 7350.5		X

Figure B-2. Publications for radar facilities

PUBLICATION	FACILITY REFERENCE FILE	CONTROLLER REFERENCE FILE
Federal Aviation Regulations (CONUS only)		
FAR, Part 65	X	
FAR, Part 105	X	
Field Manuals		
FM 1-103	X	
FM 1-303	X	X
ICAO Manual (OCONUS only)		
ICAO Manual 7910	X	X
Technical Bulletin		
TB 95-1	X	
Technical Manuals		
TM 95-225	X	
TM 95-226	X	

NOTE: Operator's manuals are required for the equipment authorized in each unit and shall be maintained in the controller reference file.

Figure B-2. Publications for radar facilities (continued)

ARMY FLIGHT-FOLLOWING SERVICE FIXED-BASE FACILITIES

PUBLICATION	FACILITY REFERENCE FILE	CONTROLLER REFERENCE FILE
Army Regulations		
AR 25-50	X	X
AR 40-8	X	
AR 40-501	X	
AR 95-2	X	X
AR 95-3	X	
AR 95-21		X
AR 385-95	X	
AR 420-90	X	
DOD FLIPs (for applicable area of coverage)		
Low Altitude Instrument Approach Procedures	X	X
Charts	X	X
IFR Supplement	X	X
VFR Supplement	X	X
FAA Publications		
FAA Handbook 7110.65	X	
FAA Handbook 7210.3	X	
FAA Order 7220.1	X	

Figure B-3. Publications for Army flight-following service fixed-base facilities

PUBLICATION	FACILITY REFERENCE FILE	CONTROLLER REFERENCE FILE
FAA Publications (continued)		
FAA Handbook 7340.1		X
FAA Handbook 7350.5		X
Federal Aviation Regulations (CONUS only)		
FAR, Part 65	X	
FAR, Part 105	X	
Field Manuals		
FM 1-103	X	
FM 1-303	X	X
ICAO Manual (OCONUS only)		
ICAO Manual 7910	X	X
Technical Bulletin		
TB 95-1	X	
Technical Manuals		
TM 95-225	X	
TM 95-226	X	

NOTE: Operator's manuals are required for the equipment authorized in each unit and shall be maintained in the controller reference file.

Figure B-3. Publications for Army flight-following service service fixed-base facilities (continued)

TACTICAL ATC (TOWER, RADAR, FOC, FCC, TACT) FACILITIES

PUBLICATION	FACILITY REFERENCE FILE	CONTROLLER REFERENCE FILE
DOD FLIPs (for applicable area of coverage)		
Low Altitude Instrument Approach Procedures	X	X
Charts	X	X
IFR Supplement	X	X
VFR Supplement	X	X
FAA Publications		
FAA Handbook 7110.65	X	X
FAA Order 7220.1	X	
Federal Aviation Regulations (CONUS only)		
FAR, Part 65	X	
FAR, Part 105	X	
Field Manuals		
FM 1-103	X	
FM 1-303	X	X
FM 57-230	X	
FM 90-25	X	

Figure B-4. Publications for tactical ATC (tower, radar, FOC, FCC, TACT) facilities

PUBLICATION	FACILITY REFERENCE FILE	CONTROLLER REFERENCE FILE
ICAO Manual (OCONUS only)		
ICAO Manual 7910		X
Technical Bulletin		
TB 95-1	X	
Technical Manuals		
TM 95-225	X	X
TM 95-226	X	X

NOTE: Operator's manuals are required for the equipment authorized in each unit and shall be maintained in the controller reference file.

Figure B-4. Publications for tactical ATC (tower, radar, FOC, FCC, TACT) facilities (continued)

COMPANY AND PLATOON HEADQUARTERS

DOD FLIPs (for applicable area of coverage)

Low Altitude Instrument Approach Procedures

Charts

IFR Supplement

VFR Supplement

Figure B-5. Publications for company and platoon headquarters

FAA Publications

FAA Handbook 7110.65

FAA Order 7220.1

FAA Handbook 7340.1

FAA Handbook 7350.5

Federal Aviation Regulations (CONUS only)

FAR, Part 65

FAR, Part 105

Field Manuals

FM 1-103

FM 1-303

ICAO Manual (OCONUS only)

ICAO Manual 7910

Technical Bulletin

TB 95-1

Technical Manuals

TM 95-225

TM 95-226

NOTE: Operator's manuals are required for the equipment authorized in each unit.

Figure B-5. Publications for company and platoon headquarters (continued)

ARMY AIRSPACE COMMAND AND CONTROL ELEMENTS

Field Manuals

FM 1-100

FM 1-103

FM 100-103

Joint Publication

Joint Pub 3-52

Figure B-6. Publications for A^2C^2 elements

Section II. Publications Required for ATC Maintenance Fixed-Base Facilities and Tactical Sections

To properly conduct maintenance and maintenance management and to ensure safety, each ATC maintenance fixed-base facility and tactical section needs an up-to-date publications reference file. Publications files shall be maintained for all assigned equipment and for TMDE up to and including the level of maintenance authorized. Figure B-7 lists the required publications. In addition to those publications, these facilities and sections shall have maintenance and electronic safety SOPs.

ATC MAINTENANCE FIXED-BASE FACILITIES AND TACTICAL SECTIONS

PUBLICATION	FIXED-BASE FACILITY FILE	TACTICAL SECTION FILE
Army Regulations		
AR 25-400-2	X	X

Figure B-7. Publications for ATC maintenance fixed-base facilities and tactical sections

Army Regulations (continued)		
AR 70-37	X	
AR 95-1	X	X
AR 95-2	X	X
AR 95-21	X	
AR 385-10	X	X
AR 385-30	X	X
AR 700-138	X	X
AR 725-50	X	X
AR 750-1	X	X
AR 750-43	X	X
DA Pamphlets		
DA Pam 25-30	X	X
DA Pam 738-750	X	X
DA Pam 750-10	X	X
Field Manuals		
FM 10-14		X
FM 11-486-23	X	X
FM 11-487-4	X	X
FM 11-490-9	X	X
FM 20-31		X

Figure B-7. Publications for ATC maintenance fixed-base facilities and tactical sections (continued)

Field Manuals (continued)		
FM 21-11	X	X
FM 24-2	X	X
FM 43-5		X
FM 43-11		X
Supply Bulletin		
SB 11-573	X	X
Technical Bulletins		
TB 11-6625-3263-25	X	X
TB 43-0001-61-1	X	X
TB 43-0118	X	X
TB 43-0129	X	X
TB 43-0133	X	X
TB 43-0180	X	X
TB 43-0181		X
TB 95-1	X	X
TB 385-4	X	X
TB 750-25	X	X
TB MED 523	X	X
TB SIG 222	X	X
TB SIG 252	X	X

Figure B-7. Publications for ATC maintenance fixed-base facilities and tactical sections (continued)

Technical Manuals		
TM 5-811-3	X	X
TM 5-811-5	X	
TM 5-823-4	X	
TM 9-6140-200-14	X	X
TM 43-0139	X	X
TM 95-225	X	X

Figure B-7. Publications for ATC maintenance fixed-base facilities and tactical sections (continued)

APPENDIX C

AIR TRAFFIC CONTROL AWARDS PROGRAM

This appendix provides guidance and policy for nominating and selecting Army ATC military and civilian personnel for awards. It describes the Army's participation in the ATC, Safe Aviation Via Exceptional Service, and Air Traffic Control Association awards program.

C-1. PURPOSE

The awards program recognizes managers, controllers, maintenance technicians, facilities, and platoons that have made outstanding contributions in ATC during the past year. These contributions could be through services, ideas, developments, or accomplishments. The program also allows the Army to compete for SAVES and ATCA awards.

C-2. AIR TRAFFIC CONTROL AWARDS

a. ATC Award Nominations. Each MACOM is authorized to submit one nominee for each award. The procedures for nominating candidates are explained below and in Figure C-1 (page C-4). Nominations shall be prepared and placed in a one-piece flexible binder as explained in Figure C-2 (page C-5).

b. ATC Award Criteria.

(1) Manager of the year. This award is given to the ATC manager who has performed outstandingly in or contributed commendably to air traffic control within the past calendar year. One or more of the general areas below, with no priority of importance implied, may be considered.

(a) Excellence in all managerial situations.

(b) Development and implementation of ATC procedures that have improved ATC management.

(c) Performance of duty that commands the respect and recognition of others in ATC.

(d) Outstanding personal performance.

(e) Outstanding achievement in community relations.

(f) Authorship of a recognized technical or nontechnical paper on ATC.

(g) Dedication to the ATC system beyond the normal requirement or expectation.

(2) Controller of the year. This award is given to the air traffic controller who has performed outstandingly in or contributed commendably to ATC within the past calendar year. One or more of the general areas below, with no priority of importance implied, may be considered.

(a) Outstanding performance in unusually adverse/ emergency situations.

(b) Development, introduction, and acceptance of ATC procedures that have improved safety or efficiency.

(c) Continuous efficient performance of duty that commands the respect and recognition of others in ATC.

(d) Outstanding personal performance.

(e) Outstanding achievement in community relations.

(f) Authorship of a recognized technical or nontechnical paper on ATC.

(g) Dedication to the ATC system beyond the normal requirement or expectation.

(3) Facility of the year. This award is given to the fixed facility that has contributed greatly to safety or efficiency in ATC within the past calendar year. One or more of the general areas below, with no priority of importance implied, may be considered.

(a) Exceptionally high efficiency displayed in the control of air traffic or recognition of outstanding service by users of the service.

(b) Outstanding handling of an unusual traffic overload/emergency by a facility or group of controllers within a facility.

(c) A notable group contribution to safety, procedures, systems concept, or development.

(d) Outstanding community or activity support.

(4) **Platoon of the year.** This award is given to the platoon that has contributed greatly to safety or efficiency in tactical ATC within the past calendar year. One or more of the general areas below, with no priority of importance implied, may be considered.

(a) Exceptionally high efficiency displayed in the control of air traffic or recognition of outstanding service by users of the service.

(b) Outstanding handling of an unusual traffic overload/emergency by a platoon or group of controllers within a platoon.

(c) A notable group contribution to safety, procedures, systems concept, or development.

(d) Outstanding community or activity support.

(5) **Maintenance technician of the year.** This award is given to the technician who has contributed greatly to ground systems or displayed outstanding technical competence while maintaining ground systems within the past year. Ground systems include NAVAIDS, communications, and all other systems or equipment used in ATC. One or more of the general areas below, with no priority of importance implied, may be considered.

(a) Outstanding personal performance.

(b) Introduction and acceptance of procedures that have improved operations, maintenance, efficiency, and safety.

(c) Authorship of a recognized technical or nontechnical paper on ATC equipment maintenance.

(d) Demonstration of ability in and dedication to maintaining ATC equipment and facilities beyond the normal requirement or expectation.

c. **ATC Award Recipient Selection.** The Director, USAATCA, will convene a board to select the winners of annual ATC awards from the nominations received from major commanders. The CG, USAAVNC, will announce the selections and arrange for presentation of the awards. He also will nominate the selectees as candidates for the ATCA awards (see paragraph C-4).

d. **ATC Award Presentation.** The ATC awards will be presented at a time and place designated by the CG, USAAVNC.

AWARD	NOMINATIONS	ACTIONS
Manager of the Year	Commander having ATC personnel assigned, military or civilian.	Review nominations from their units; select the most outstanding one; and send the nomination to Commander, USAAVNC, ATTN: ATZQ-ATC-MO, Fort Rucker, AL 36362-5265 for further nomination. Nominations must arrive before 1 April of current year.
Controller of the Year	Same as above.	Same as above.
Maintenance Technician of the Year	Commander having ATC maintenance personnel assigned, military or civilian.	Same as above.
Facility of the Year	Commander having ATC facilities.	Same as above.
Platoon of the Year	Commander having tactical ATC platoons.	Same as above.

Figure C-1. Nomination for awards

AWARD	BINDER CONTENTS	DESCRIPTION
Manager of the Year	1. Cover.	
	a. Nominee's grade and name.	
	b. Award.	
	(1) AIR TRAFFIC CONTROL MANAGER OF THE YEAR	All capital letters.
	or	
Controller of the Year	(2) AIR TRAFFIC CONTROLLER OF THE YEAR	All capital letters.
	or	
Maintenance Technician of the Year	(3) AIR TRAFFIC CONTROL MAINTENANCE TECHNICIAN OF THE YEAR	All capital letters.
	c. Nominating unit's designation.	
	2. Inside.	
	a. Nominating memorandum.	a. One page, memorandum format.
	b. Substantiating data for the nomination.	b. No more than three single-spaced, typewritten pages.
	c. Personal data.	c. Single-spaced, typewritten, including name, position title, grade, date of birth, organization, residence, and marital status.

Figure C-2. Nomination format

AWARD	BINDER CONTENTS	DESCRIPTION
Facility of the Year	1. Cover.	
	a. Facility's name.	
	b. AIR TRAFFIC CONTROL FACILITY OF THE YEAR	All capital letters.
	c. Nominating unit's designation.	
	2. Inside.	
	a. Nominating memorandum.	a. One page, memorandum format.
	b. Substantiating data for the nomination.	b. No more than four single-spaced, typewritten pages.
	c. Optional photograph.	c. 8" x 10", black and white.
Platoon of the Year	1. Cover.	
	a. Nominated platoon's numerical designator and location.	
	b. TACTICAL AIR TRAFFIC CONTROL PLATOON OF THE YEAR.	All capital letters.
	c. Nominating unit's designation.	
	2. Inside.	
	a. Nominating memorandum.	a. One page, memorandum format.
	b. Substantiating data for the nomination.	b. No more than four single-spaced, typewritten pages.
	c. Optional photograph.	c. 8" x 10", black and white.

Figure C-2. Nomination format (continued)

C-3. SAFE AVIATION VIA EXCEPTIONAL SERVICE AWARDS

The SAVES award recognizes controllers for exceptional contributions to aviation safety through the saving of life or property. Commanders having military or civilian ATC personnel assigned may send nominations through channels to the Commander, USAAVNC, ATTN: ATZQ-ATC-MO, Fort Rucker, AL 36362-5265.

a. SAVES Award Nominations.

(1) Commanders must use their judgment in nominating individuals for awards under this program. Because of variables in the ATC profession, no definition or prerequisites may be given as to what specifically determines SAVE. Actions which saved lives or property should be considered first. Examples of actions to consider are given below.

(a) Helping an aircraft in distress.

(b) Effectively responding to an emergency.

(c) Identifying and averting a hazardous situation unknown to the pilot.

(d) Taking any other action that clearly shows the saving of lives or property.

(2) Using the standard Army memorandum format, the facility/unit submits nominations for the SAVES award. The nominations will include the name and grade of the nominee, the name of the nominating unit, and a detailed account of the event to support the nomination. The supporting data will include the items given below, if available.

(a) Statements by the controllers involved.

(b) Statements by the aviators involved.

(c) Statements by other personnel, as appropriate.

(d) Any other data that may support the nomination; for example, a written transcription of a tape recording.

b. SAVES Award Recipient Selection. The Director, USAATCA, will convene a selection board quarterly to review and evaluate nominations for the SAVES award. The selection board will determine the appropriate award and return it through channels for presentation.

c. SAVES Award Presentation. The SAVES awards will be presented at a time and place designated by the CG, USAAVNC.

C-4. AIR TRAFFIC CONTROL ASSOCIATION AWARDS

The ATCA is a nongovernmental, nonprofit, professional association of air traffic controllers. Candidates for this award are those individuals selected for ATC awards (see paragraph C-2c).

a. ATCA Award Nominations. The ATCA nominates individuals for the ATCA awards each year, generally before 1 July.

b. ATCA Award Recipient Selection and Award Presentation. A professional committee of ATCA members selects the recipients, and the awards are presented at the National ATCA Conference.

APPENDIX D

THEODOLITE OPERATIONS

The accuracy of theodolite measurements depends on the proper care, setup, and adjustment of the instrument. Personnel must be careful when removing the theodolite from its carrying case and when mounting it onto the tripod. This appendix explains the correct procedures for setting up, leveling, adjusting, positioning, and orienting the theodolite. It also includes flight check commissioning factors and preventive maintenance measures. Figure D-1 (page D-2) illustrates the components of the theodolite (model 20-8400).

D-1. SETUP

a. Removal From the Carrying Case. Follow the steps below to remove the theodolite from its carrying case. (Refer to paragraph D-8b (page D-27) for instructions on replacing the instrument in the case.)

(1) Place both hands under the base plate (the part containing the azimuth scale), and slide the instrument out of its case.

(2) With one hand (reaching from above), grasp the two adjacent leveling screws at the narrow part of the column and cradle the instrument carefully against your body with your forearm.

(3) With the other hand, unscrew the baseboard.

b. Mounting Onto the Tripod.

NOTE: When mounting the theodolite onto the tripod, do not turn the theodolite by the upper part when the azimuth tangent screw is engaged; this may cause damage to the threads.

(1) With both hands on the column, carefully screw the instrument onto the tripod head.

(2) Remove the dust cap, and install the sunshade onto the telescope.

(3) Screw the tripod cap onto the baseboard, replace the baseboard in the carrying case, and close the door.

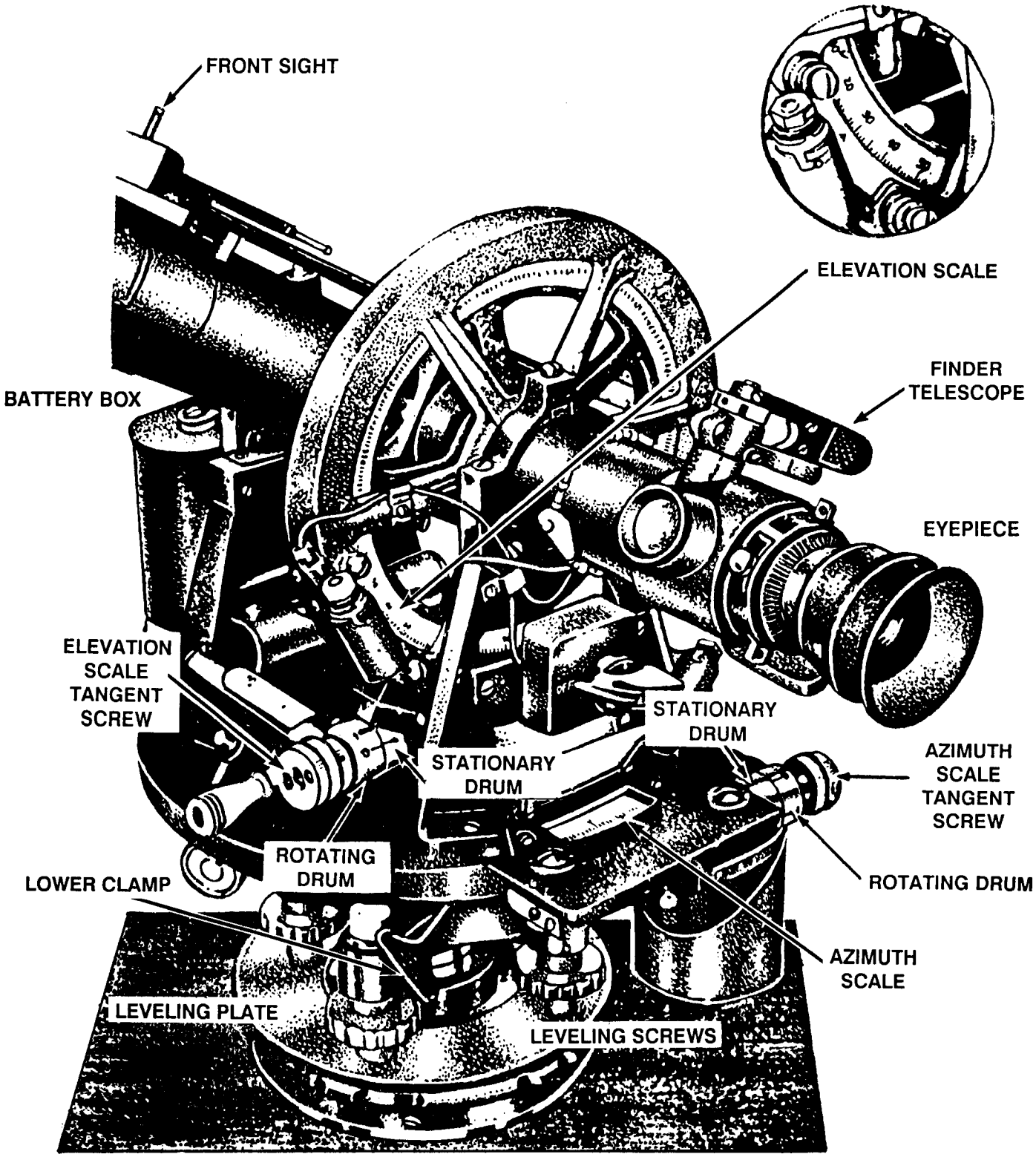

Figure D-1. Theodolite components

D-2. LEVELING

a. Preparation for Leveling.

NOTE: Steps (1) through (3) below may be omitted if the theodolite is not positioned over a point such as a marker stake or bench marker.

(1) If the theodolite is to be located over a point such as a marker stake, suspend the plumb bob by its string from the eye accessible through the hole in the bottom of the leveling plate.

(2) Keeping the theodolite approximately level (as gauged by the eye), center the plumb bob over the marker by moving the tripod legs.

(3) Accurately center the plumb bob over the marker by loosening the two adjacent leveling screws and shifting the instrument laterally by moving its shifting plate. If this moves the theodolite too near the edge of the base plate, reposition the tripod legs.

(4) Ensure that the theodolite is approximately level (as gauged by the eye).

(5) Disengage the elevation scale tangent screw by pushing it down.

(6) Point the telescope straight up.

(7) Reengage the elevation scale tangent screw by pushing it up.

(8) Lower the battery box to provide a better view of bubble levels.

(9) Disengage the azimuth scale tangent screw by pulling it out.

(10) Set the horizontal azimuth scale to 0°.

(11) Reengage the azimuth scale tangent screw by pushing it in.

(12) Loosen the lower clamp.

(13) Loosen the leveling screws slightly, and slide the instrument until it is centered or until the plumb bob (if used) is exactly over the marked observation point; then retighten the leveling screws.

(14) Rotate the instrument so that each bubble level is parallel to a diagonally opposite pair of leveling screws; then retighten the lower clamp.

b. Procedures for Leveling.

NOTE: The proper theodolite level is indicated when leveling bubbles are centered and their ends are an equal distance from the corresponding graduation marks.

(1) Using both hands, grasp one pair of diagonally opposite leveling screws between the thumbs and forefingers.

(2) With a smooth and steady motion, turn the screws simultaneously so that your thumbs move either toward or away from each other. This ensures that the screws are tightened or loosened an equal amount. The bubble will move in the same direction as your left thumb.

NOTE: Do not loosen any screw to a point that will allow the instrument to wobble on the mount.

(3) Using the technique in (1) and (2) above, bring one bubble near the center. Then move to the opposite pair of leveling screws and bring the other bubble near the center. The bubble levels should now be nearly centered, and all leveling screws should be fairly snug.

(4) To center the bubbles exactly, carefully adjust one screw of a pair at a time, alternating pairs until both bubbles are exactly centered. All leveling screws should be firm and both bubbles centered.

(5) Disengage the azimuth scale tangent screw, and rotate the instrument to exactly 180°. If the bubbles remain centered, the instrument is level.

(6) If the bubbles are slightly off center, center them again using the technique in (4) above.

(7) Rotate the instrument to 0°.

NOTE: If the bubbles are centered, the instrument is level. If the bubbles are off center, a vertical axis adjustment is required. Refer to paragraph D-4a (page D-7) for the procedure for this major adjustment.

D-3. MINOR ADJUSTMENTS

CAUTION

Never sight the theodolite on the sun without using the special sun filter. The concentration afforded by the telescope can easily cause damage to the eye.

---

a. Focusing. If those personnel who normally wear eyeglasses can remove them during theodolite operations, they will obtain a greater field of view. They should choose a distant, preferably indistinct, object to make focus comparisons with and without eyeglasses. They should completely refocus the instrument each-time. Figure D-2 (page D-6) shows a cutaway view of the theodolite optical system.

(1) Cross-hair focusing. Sight through the eyepiece with the telescope pointed toward the sky, and bring the cross hairs into focus by rotating the eyepiece by hand until the cross hairs are seen with maximum sharpness.

(2) Telescope focusing. Sight on an object at least 100 feet away, and focus on it by turning the knurled knob until the object is clear and distinct.

NOTE: If an aircraft is to be picked up at some distance inbound, focus on a distant object on the horizon. Check the focus by moving the head slightly from side to side or up and down while peering into the eyepiece. Focusing is correct when the cross hairs do not appear to move across the field of the telescope.

b. Checking for and Correcting Backlash.

(1) Checking for backlash. Sight the cross hairs on a target about 1,500 feet away or further. With the tangent screws engaged, rotate the tangent screws slowly back and forth, one at a time, while looking at the target through the telescope. If a tangent screw can be rotated without a corresponding movement of the cross hairs on the target, backlash is present.

(2) Correcting backlash. Turn the backlash screw counterclockwise just until there is no backlash. If backlash is not corrected by doing this, the problem may be end play. To correct end play, remove the end thrust spring and bend it slightly to put more pressure on the end of the tangent screw shaft.

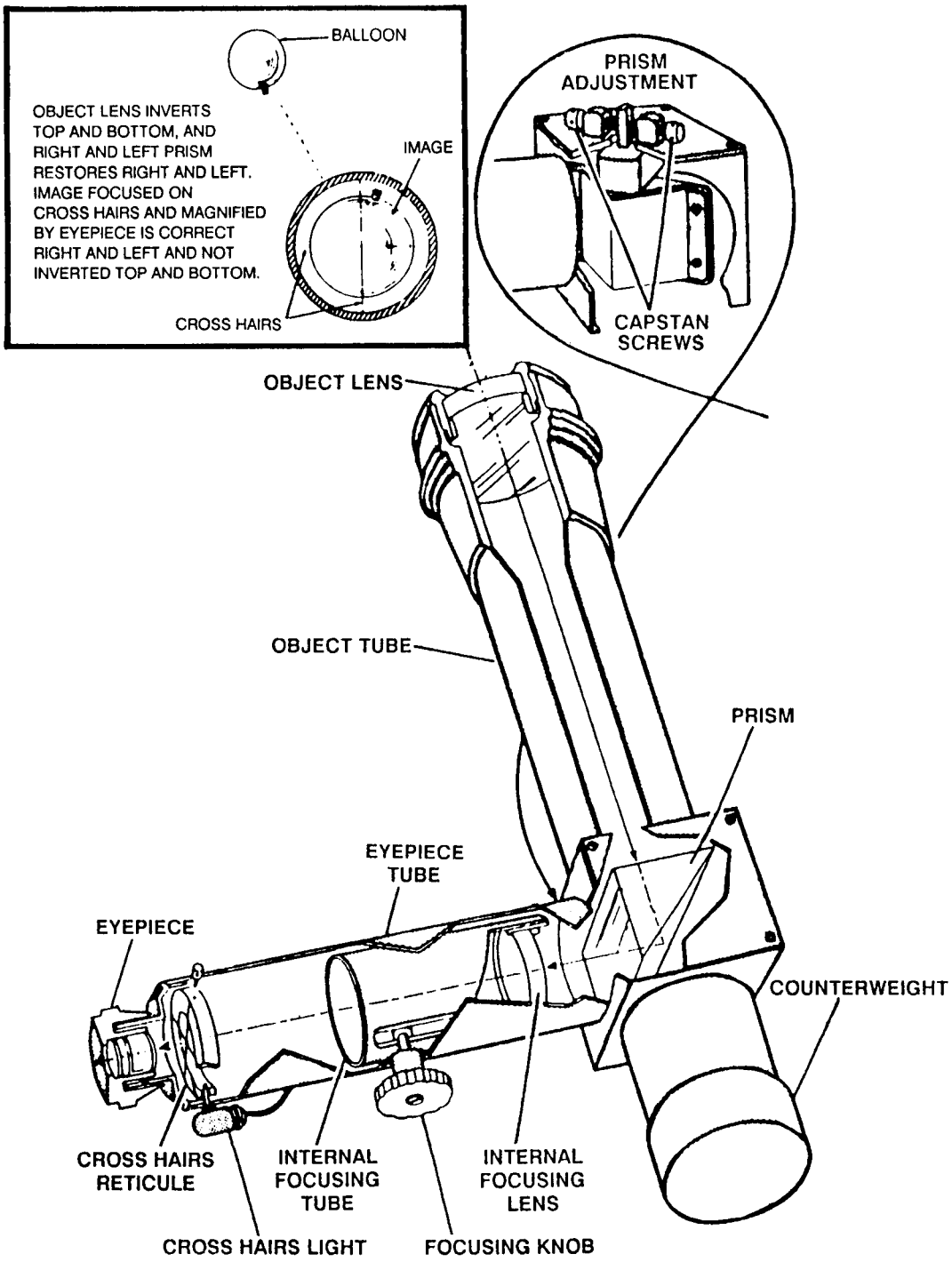

Figure D-2. Cutaway view of the theodolite optical system

c. Checking for and Correcting Mesh.

(1) Checking for proper mesh. While watching the elevation scale, lift the elevation tangent screw against the vertical scale ring gear. If mesh is proper, there should be no movement of the vertical scale. Improper mesh of the azimuth tangent screw will cause binding and undue wear.

(2) Correcting improper mesh. Turn the backlash screw clockwise; then recheck.

NOTE: The tangent screw fiducial marks on the stationary drum should be visible when your eye is at the eyepiece position. The spacing should be as close as possible without touching.

d. Adjusting Drums

(1) To adjust the stationary drums, loosen the set screws, position the drums (see NOTE above), and retighten the set screws.

(2) If the drums have been rotated, check the vertical scale alignment. The horizontal azimuth scale should be set so that when one of the degree marks is lined up with the fiducial mark, the tangent screw is on 0°. If the tangent screw is not on 0°, loosen the lock screw at the end of the tangent screw and slip the tangent screw until it is on 0°.

D-4. MAJOR ADJUSTMENTS

Theodolite accuracy depends on the proper adjustment of four points: the vertical axis, the line of collimation, the horizontal axis, and the elevation scale fiducial mark. The adjustment procedures are described below separately, but each adjustment relates to the others.

NOTE: Make the four adjustments in the sequence described. One adjustment must not be done without also doing the other three.

a. Vertical Axis Adjustment. The vertical axis is the axis of horizontal rotation of the base plate and consequently of the telescope. The purpose of this adjustment is to make the axis of each bubble level perpendicular to the vertical axis of the theodolite. In other words, it makes the axis of each level exactly parallel with the plane of the base plate. When the adjustment has been properly completed, the bubble in each level will remain centered during a complete horizontal rotation of the instrument and the axis of that rotation will be vertical. Each time the theodolite is set up, the vertical axis adjustment should be checked and, if necessary, the adjustment made. Figure D-3 (page D-9) shows the vertical axis adjustment.

CAUTION

The vertical axis adjustment is a complex procedure which should be performed only by operators who know how to correctly make the adjustment.

(1) Set the azimuth scale at 0°, and leave the tangent screw in mesh.

(2) Level the theodolite.

(3) When both bubbles indicate the instrument is level, disengage the azimuth scale tangent screw and rotate the azimuth scale exactly 180°. If the bubbles remain centered, the vertical axis adjustment is correct.

(4) If the bubbles are not centered, turn the adjusting screw at the back of the levels so that the bubbles return half-way to the center. If a bubble is displaced far enough to be against the end of the bubble case, turn the adjusting screw only until the bubble starts to move. Rotate the screw back to 0° azimuth, and center the bubble with diagonally opposite leveling screws. Continue this procedure until at 180° azimuth the bubble is away from the end of the bubble case.

(5) Return the azimuth scale to 0°, and adjust each pair of diagonally opposite leveling screws to center the bubbles.

(6) Rotate the azimuth scale to 180°. If the bubble in each level remains centered, the adjustment is satisfactory.

(7) If the bubbles again move off center, remove one-half the error by adjusting the bubble level screws. Return the azimuth scale to O°, and relevel the instrument. Continue the above procedure until the bubbles remain centered for all positions of the azimuth scale.

CAUTION

Before making a correction, always relevel the theodolite and rotate the azimuth scale 180°. To avoid confusion, always level at 0° and correct at 180°.

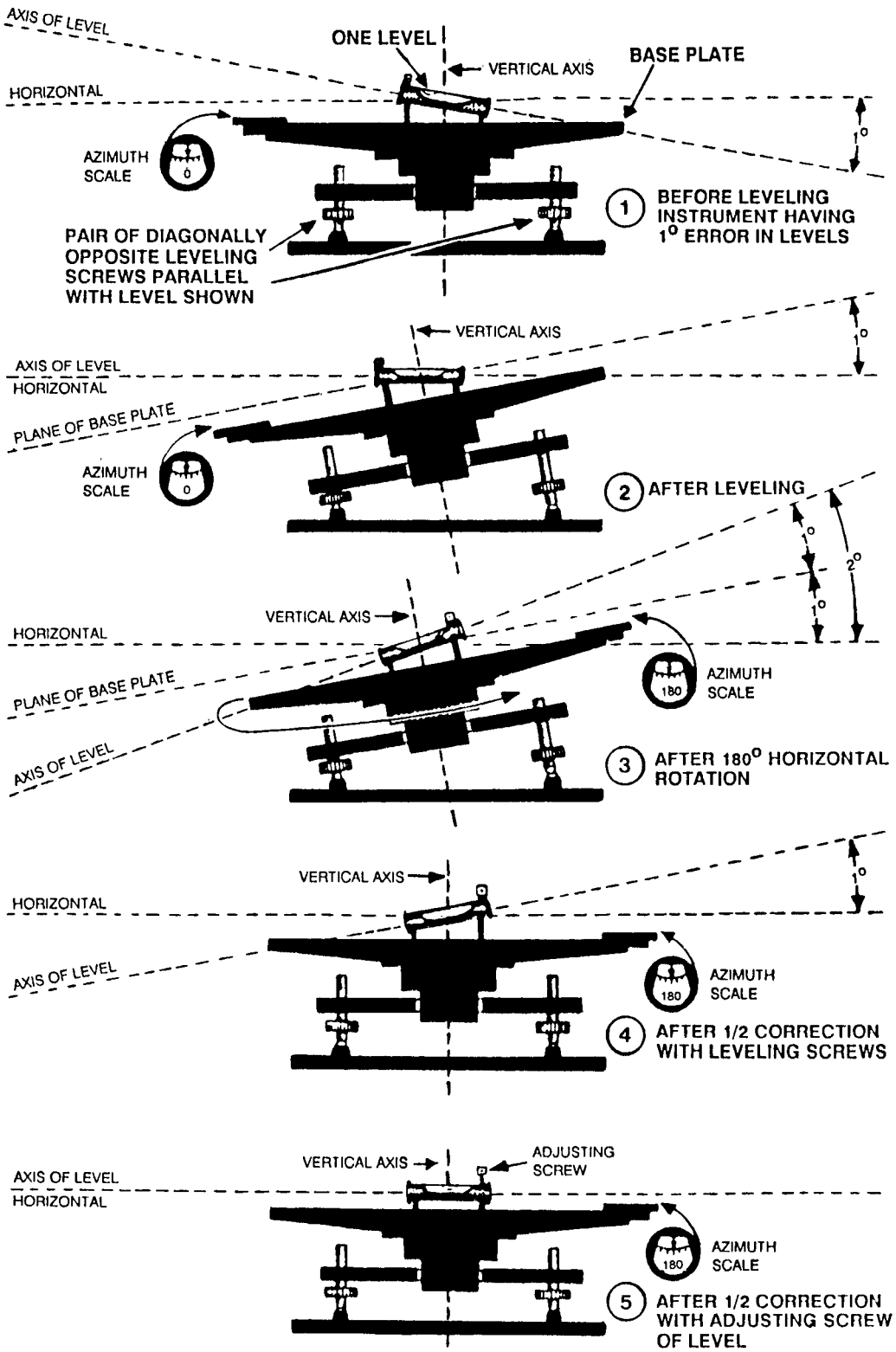

Figure D-3. Vertical axis adjustment

b. Line of Collimation Adjustment. The line of collimation is a line through the optical center of the object lens, the prism, and the cross-hairs intersection of the telescope. The line of collimation should make a 90° angle in the prism. The purpose of this adjustment is to make the line of sight through the telescope correspond to the line of collimation. If the vertical cross hair does not fall on the target after rotating the azimuth 180° and the apparent error exceeds 0.2°, a correction is required. Follow the procedures below to make the line of collimation adjustment shown in Figure D-4.

(1) Correct one half of the error by turning the azimuth scale tangent screw until the azimuth scale is set at exactly one half of the distance back to 180°.

(2) Correct the other half of the error by turning the two capstan screws of the prism adjustment until the vertical cross hair is lined up on the target.

(3) Use the two capstan pins, and turn both screws simultaneously.

(4) Again measure the error, repeating the above procedure until the apparent error is 0.2° or less. The procedure for measuring the error is described in paragraph d (page D-15).

CAUTION

Do not use excessive pressure on the screws or turn them too far. This could cause the prism or its mounts to break.

NOTE: The necessity for this adjustment is not as great in flight inspection work as is the elevation scale adjustment in paragraph d (page D-15). The line of collimation error is constant throughout azimuth as long as the elevation angle does not exceed 90°. This error is compensated for when the azimuth scale is aligned to a reference bearing.

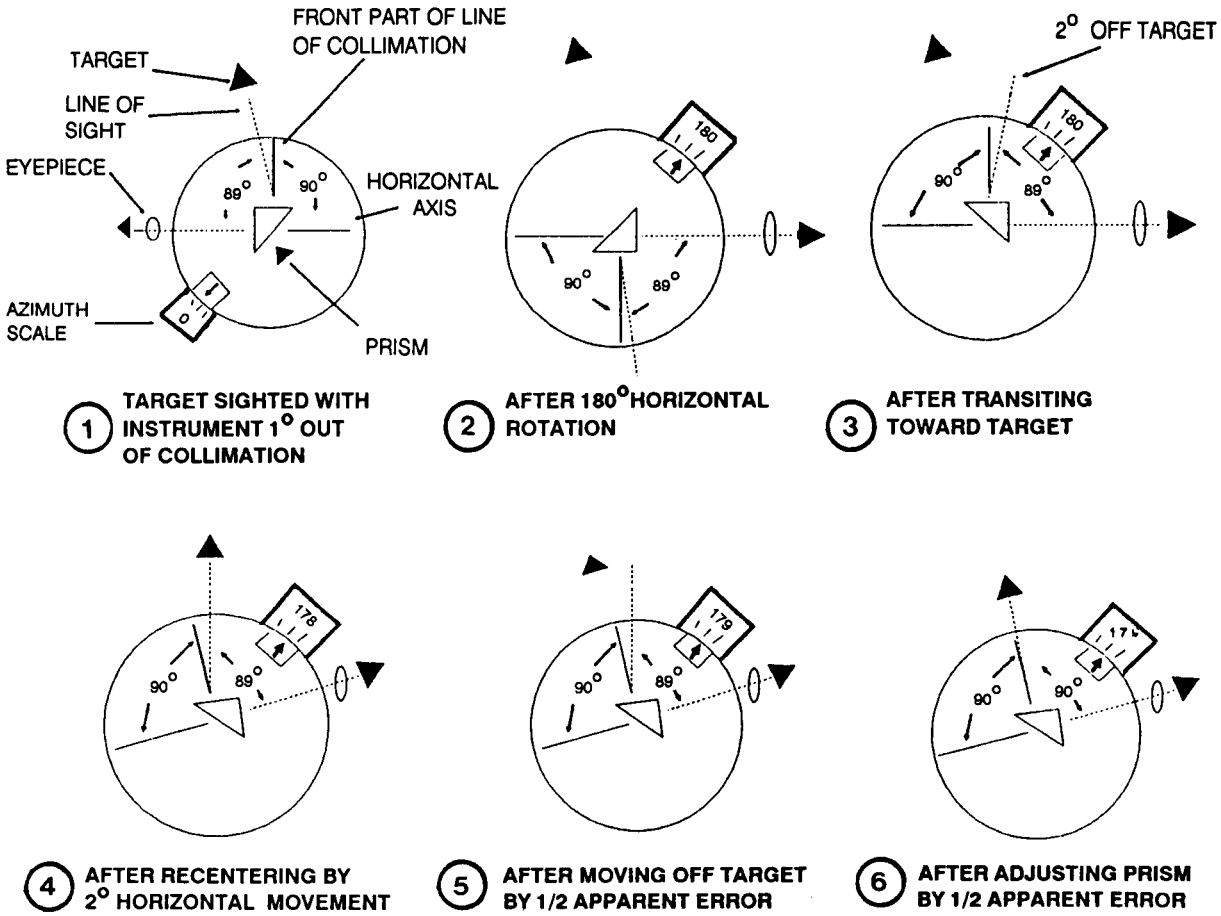

Figure D-4. Line of collimation adjustment

c. Horizontal Axis Adjustment. The horizontal axis is the axis of the vertical rotation of the telescope. The purpose of this adjustment is to make the horizontal axis of the telescope perpendicular to the vertical axis. After adjusting the vertical axis and the line of collimation, follow the steps below to adjust the horizontal axis. Figure D-5 (page D-14) shows the horizontal axis adjustment.

(1) Set up the theodolite about 20 feet from the end of a building or high wall.

(2) Level the theodolite by setting the azimuth scale at 0°, and leave the tangent screw in mesh.

(3) Loosen the lower clamp, and disengage the elevation scale tangent screw.

(4) Sight the telescope on a well-defined point as high as possible on the building or wall.

(5) Tighten the lower clamp, and engage the elevation scale tangent screw.

(6) Accurately set the cross-hairs intersection on the target by using the elevation scale tangent screw and slow-motion screw. Make the final setting of the slow-motion screw by turning it clockwise.

(7) Disengage the elevation scale tangent screw, and depress the object end of the telescope until the cross-hairs intersection falls at the base of the building.

(8) Place a mark on the building at this point; then disengage the azimuth scale tangent screw.

(9) Rotate the azimuth scale to exactly 180º, and engage the tangent screw.

(10) Swing the object end of the telescope up, and sight on the upper target again.

(11) If necessary, use the slow-motion screw to place the cross-hairs intersection at the proper adjustment.

(12) Depress the object end of the telescope to sight on the lower target. If the cross-hairs intersection again falls on the target, the horizontal axis of the instrument is properly adjusted.

(13) Turn the azimuth scale tangent screw to move the cross-hairs intersection back to the point of the original lower target.

(14) Record the reading of the azimuth scale. The deviation from 180° is the apparent error of the horizontal axis and is double the rear error.

(15) Turn the tangent screw to set the azimuth scale at exactly one half of the distance back to 180°, and raise the telescope to the level of the upper point.

(16) Turn the adjustment nuts on the adjustable standard. (The adjustable standard is located on the supporting pillar on the opposite side from the eyepiece.) If moving the cross-hairs intersection in the direction away from the adjustable standard toward the nonadjustable standard, loosen the bottom nut and turn the top nut until the intersection falls on the point. Then tighten the-top nut to lock the adjustment.

(17) Check the adjustment by repeating this entire procedure, as necessary, to get the points to coincide.

CAUTION

It is important that you adjust the adjustable standard while the telescope is pointing toward the top target. Only in this position will you be able to see how moving the horizontal axis affects the cross-hairs intersection. Also check the elevation tangent screw backlash adjustment during and after the horizontal axis adjustment.

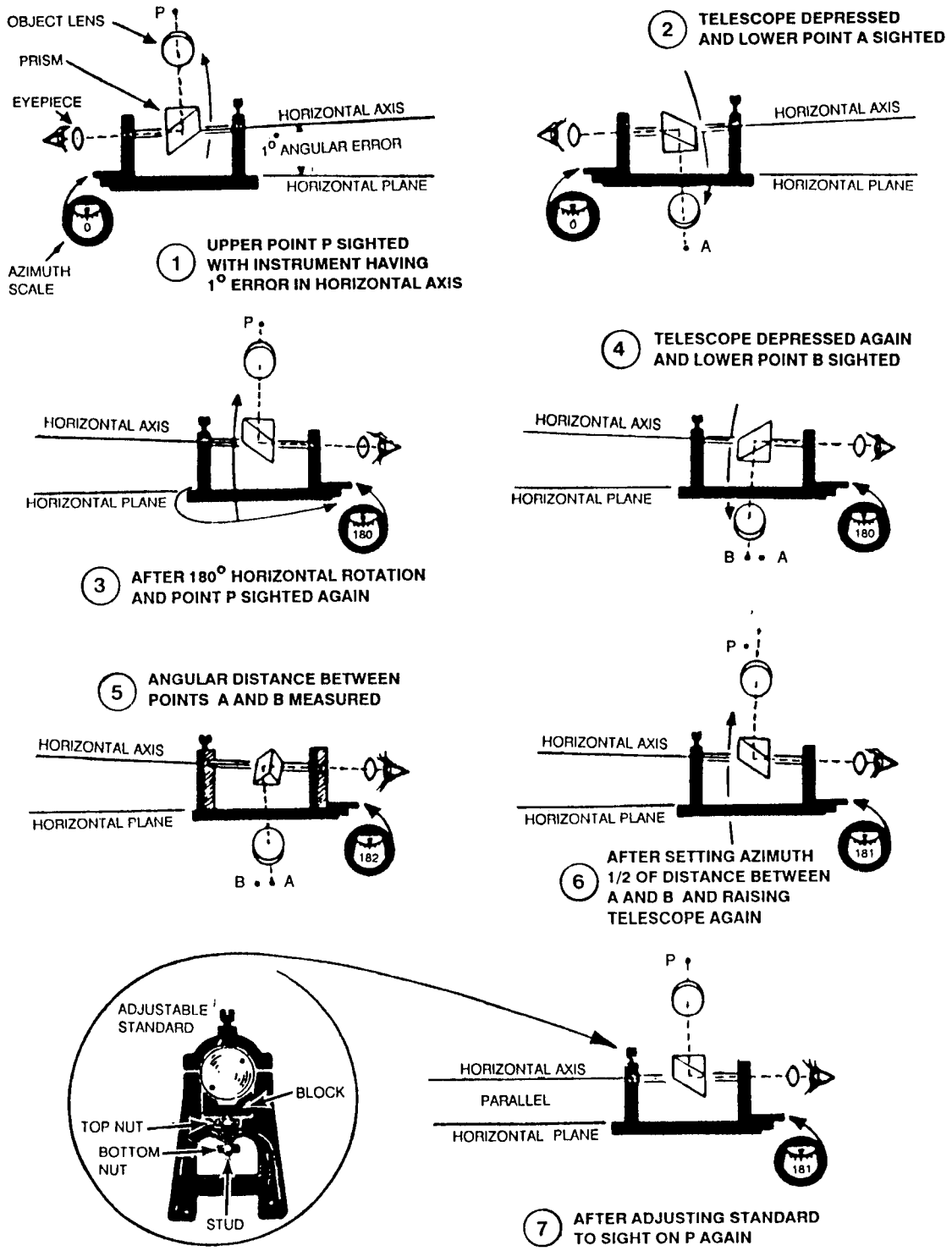

Figure D-5. Horizontal axis adjustment

d. Elevation Scale Fiducial Mark Adjustment. The purpose of this adjustment is to make the elevation scale indicate 0º when the horizontal axis of the theodolite lies in the horizontal plane. This adjustment, shown in Figure D-6 (page D-17), should be checked each time the theodolite is set up to measure vertical angles; for example, in glide slope flight checks. The adjustment should be made if the indicated error, described below, exceeds 0.2°. Follow the steps in (1) below to measure the error and the steps in (2) on page D-16 to make the adjustment.

(1) Measuring the error.

(a) Set up and level the theodolite.

(b) Set the azimuth scale and the elevation scale at exactly 0°, and leave the tangent screws in mesh.

(c) Loosen the lower clamp wing screw, and rotate the instrument horizontally while looking through the eyepiece until you select a target some distance away. (This target must lie on the horizontal cross hair, be well defined in the vertical plane, and permit reidentification.)

(d) Tighten the wing screw, and adjust the slow-motion screw until both cross hairs lie exactly on the target.

NOTE: Make the final adjustment of the slow-motion screw by turning the screw clockwise.

(e) Disengage the elevation scale tangent screw, and rotate the telescope 180°.

(f) Engage the tangent screw, and set it exactly to 180°.

(g) Disengage the azimuth scale tangent screw, and rotate the base plate to 180°.

(h) Engage the tangent screw, and set it exactly to 180°. If the cross hairs again fall exactly on the target, there is no error.

(i) If the horizontal cross hair does not fall exactly on the target, turn the elevation scale tangent screw until it does.

(j) Note the reading of the elevation scale. The deviation from 180° is the apparent error of the fiducial mark and is double the real error.

(k) If the vertical cross hair does not fall on the target, you must readjust the line of collimation and the horizontal axis.

(2) Adjusting the elevation scale fiducial mark.

(a) If the apparent error of the fiducial mark is excessive, correct one half of the error by turning the elevation scale tangent screw one half of the distance back to 180°. The next step depends on whether the remaining half of the error of the fiducial mark exceeds 1°.

CAUTION

Use the eccentrics to move the fiducial plate. Do not touch the fiducial plate with your fingers or tools.

(b) If the remaining error exceeds 1°, correct it by loosening the two fillister-head screws holding the fiducial plate and moving the fiducial plate to align the fiducial mark exactly with the 180° graduation.

(c) Tighten the fillister-head screws, ensuring that there is a minimum clearance between the fiducial plate and the elevation scale.

(d) Loosen the set screw in the end of the elevation scale tangent screw drum, and reset the tangent screw to 0°. Then retighten the set screw.

(e) Again measure the error using a new target.

(f) Repeat steps (a) through (e) above, as necessary, until the error is 1° or less.

(g) If the remaining error is 1° or less, correct the error by loosening the set screw in the end of the elevation scale tangent screw drum while holding the tangent screw stationary.

(h) With the set screw loose, turn the tangent screw to 0°; then retighten the set screw.

(i) Again measure the error using a new target.

(j) Repeat the procedure, as necessary, until the apparent error is 0.2° or less.

(k) Reposition the fiducial scale, as outlined in the preceding steps, until it is aligned with the 180° graduation when the tangent screw is set at 0°.

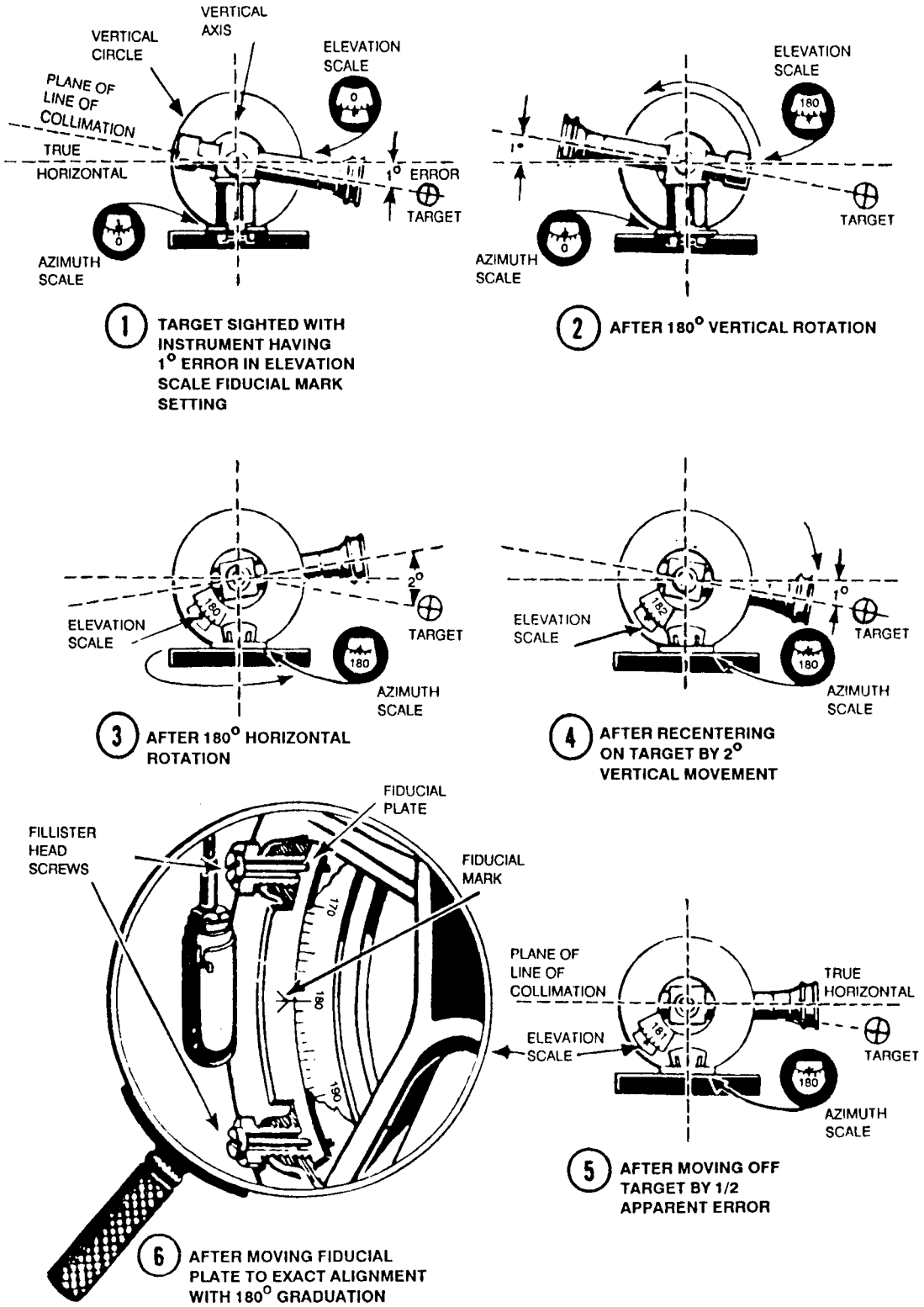

Figure D-6. Elevation scale fiducial mark adjustment

D-5. POSITIONING

The theodolite will be positioned according to the criteria for the precision approach radar. Figures D-7 through D-12 show how to position and reposition the theodolite. If an aircraft equipped with the Automatic Flight Inspection System is not used for the commissioning inspection, a theodolite shall be used to determine glide angles including lower safety limits. For a PAR facility performance evaluation, the theodolite is placed as close to the runway as possible. However, it must be placed forward of the RPI to minimize or eliminate the elevation difference between the RPI (touchdown) and the theodolite location; this difference includes the height of the theodolite eyepiece. The touchdown reflector is usually abeam the RPI, but not always. Aircraft operations will dictate how close to the runway the theodolite can be located.

NOTE: The elevation and azimuth scales are graduated in whole degrees, whereas the elevation and azimuth tangent screws are graduated in tenths of a degree. Therefore, angles may be read accurately in degrees and tenths of a degree.

D-6. ORIENTATION

The theodolite is oriented on the actual glide slope angle (for example, 2.5°) on the vertical scale when set up on the observation point and viewing the approach end of the runway. Follow the steps below to orient the theodolite properly.

a. With a lensatic compass, select a prominent object: record its bearing from the observation point.

b. Place the theodolite at the observation point.

c. Level the theodolite.

d. Set the azimuth scale and azimuth scale tangent screw to read the exact azimuth of the established reference point.

e. Loosen the lower clamp, and sight the reference point as close to the vertical cross hair as possible.

f. Retighten the lower clamp; then adjust the slow-motion screw until the vertical cross hair is exactly on the reference point. Make the final adjustment by turning the slow-motion screw clockwise.

NOTE: Because of the prism arrangement in the theodolite telescope, objects viewed through the proper plane will be presented to the operator upside down. When the aircraft appears in the bottom half of the scope, it is <u>high.</u> When it appears in the top half, it is <u>low.</u>

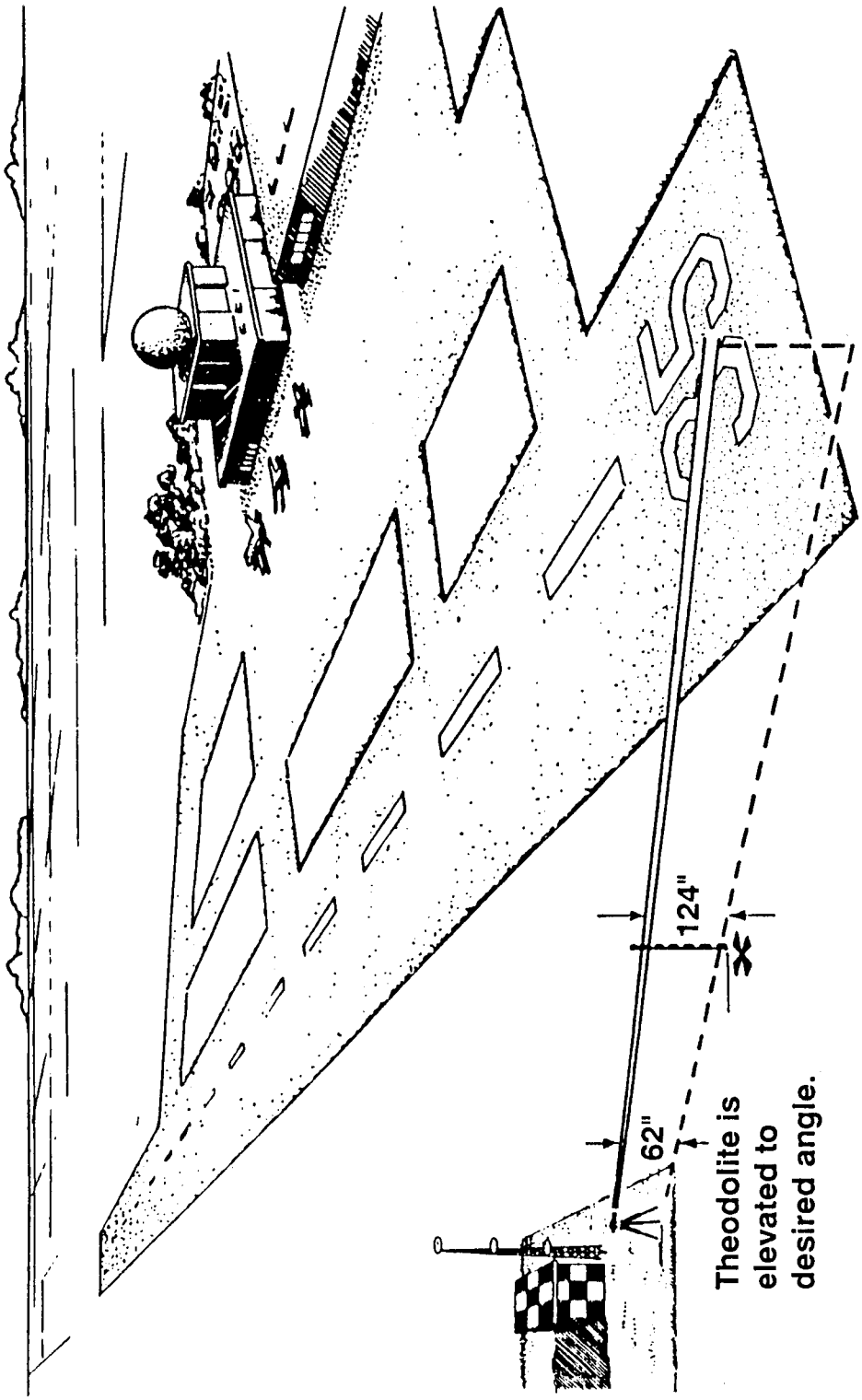

Figure D-7. Theodolite positioned

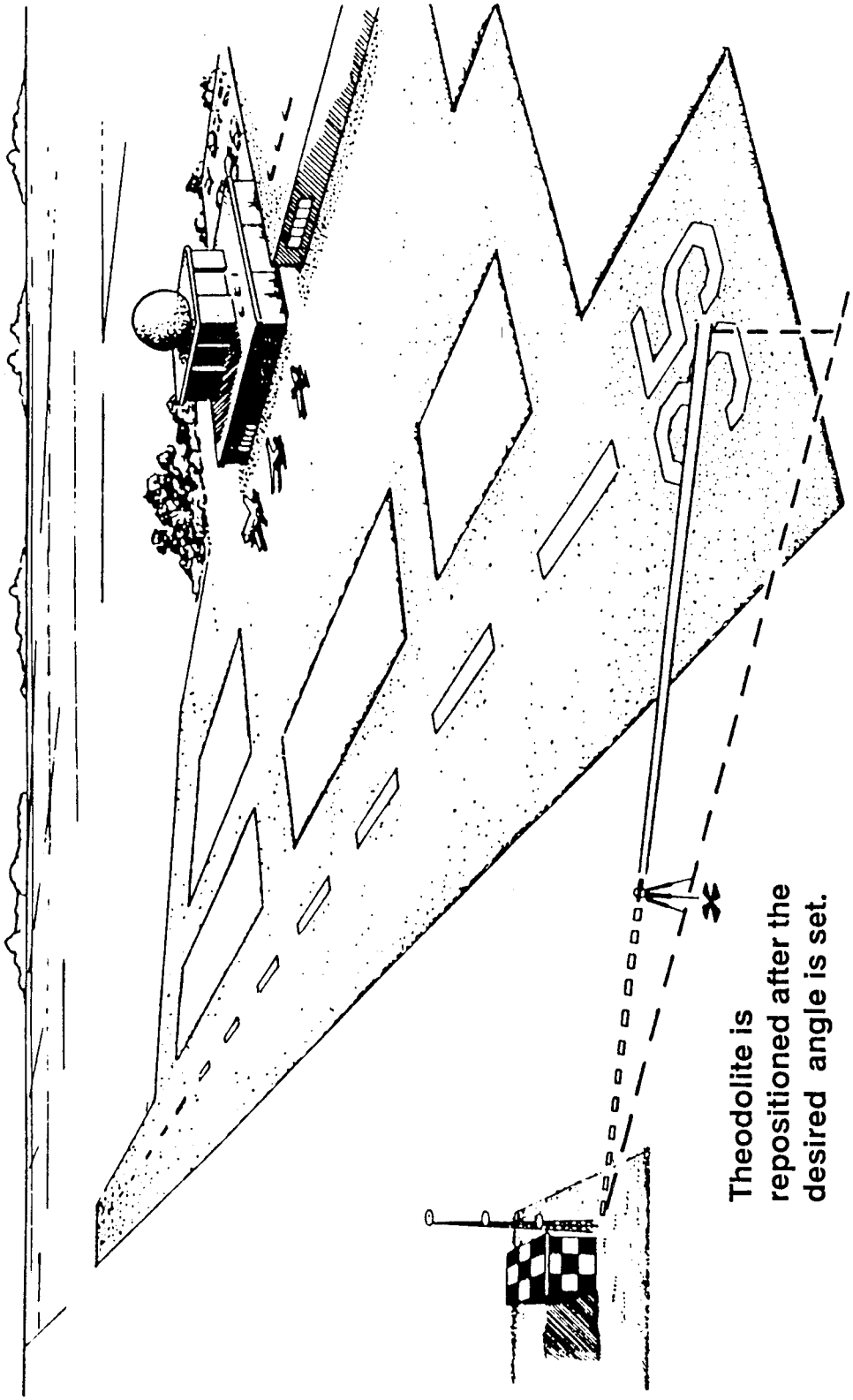

Figure D-8. Desired angle set and theodolite repositioned

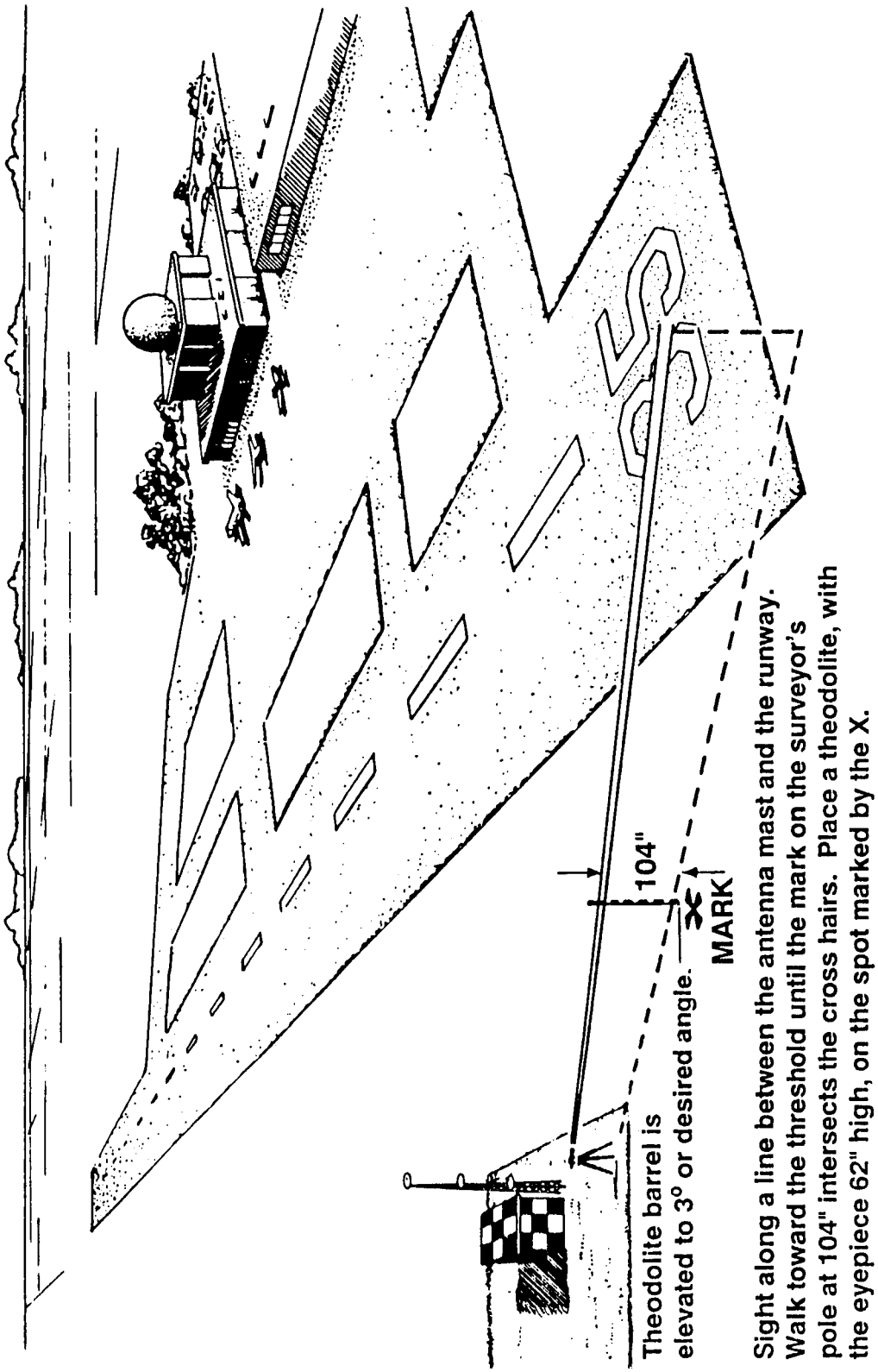

Figure D-9. Theodolite barrel elevated

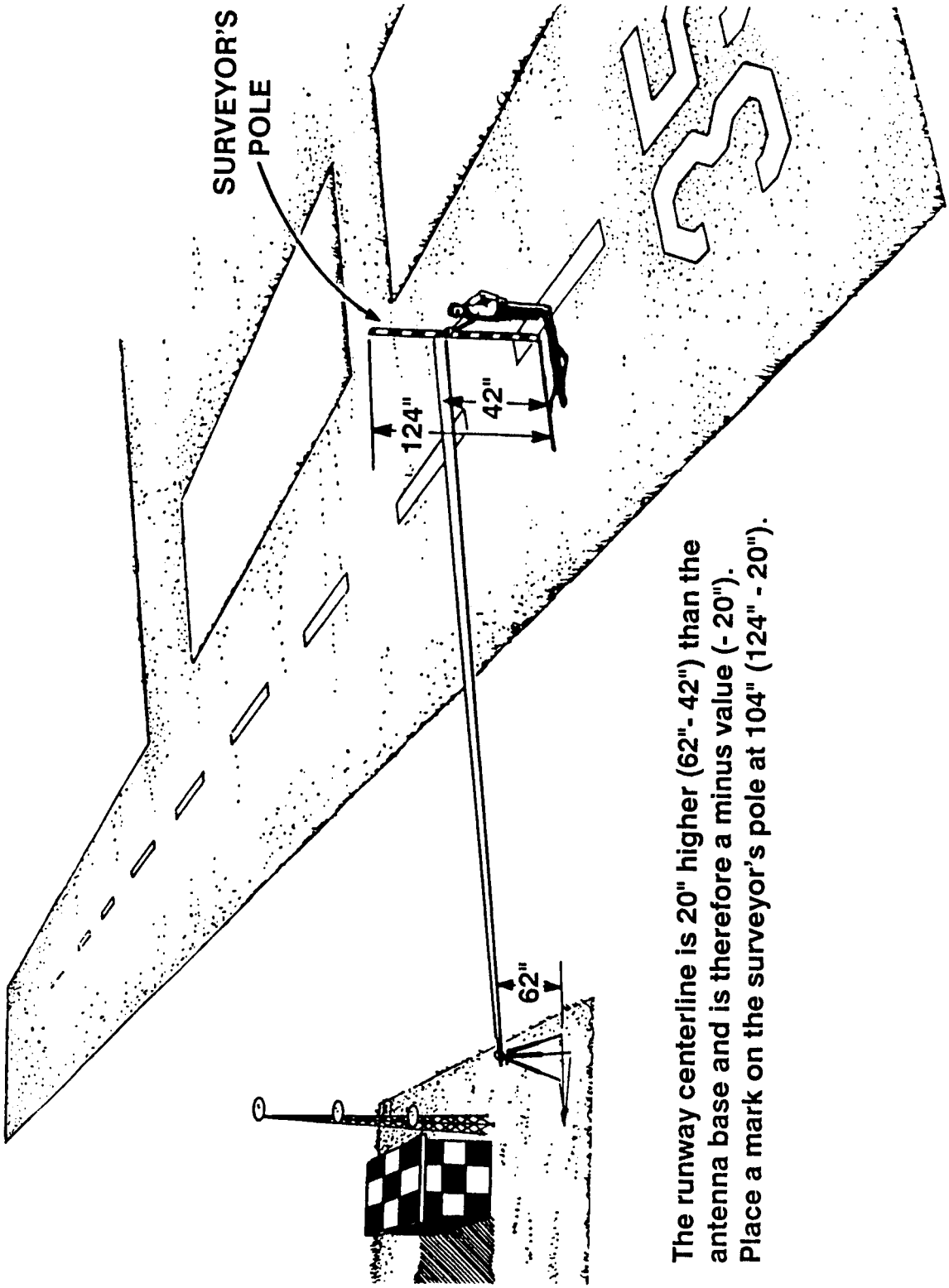

Figure D-10. Adjustment made for height differences

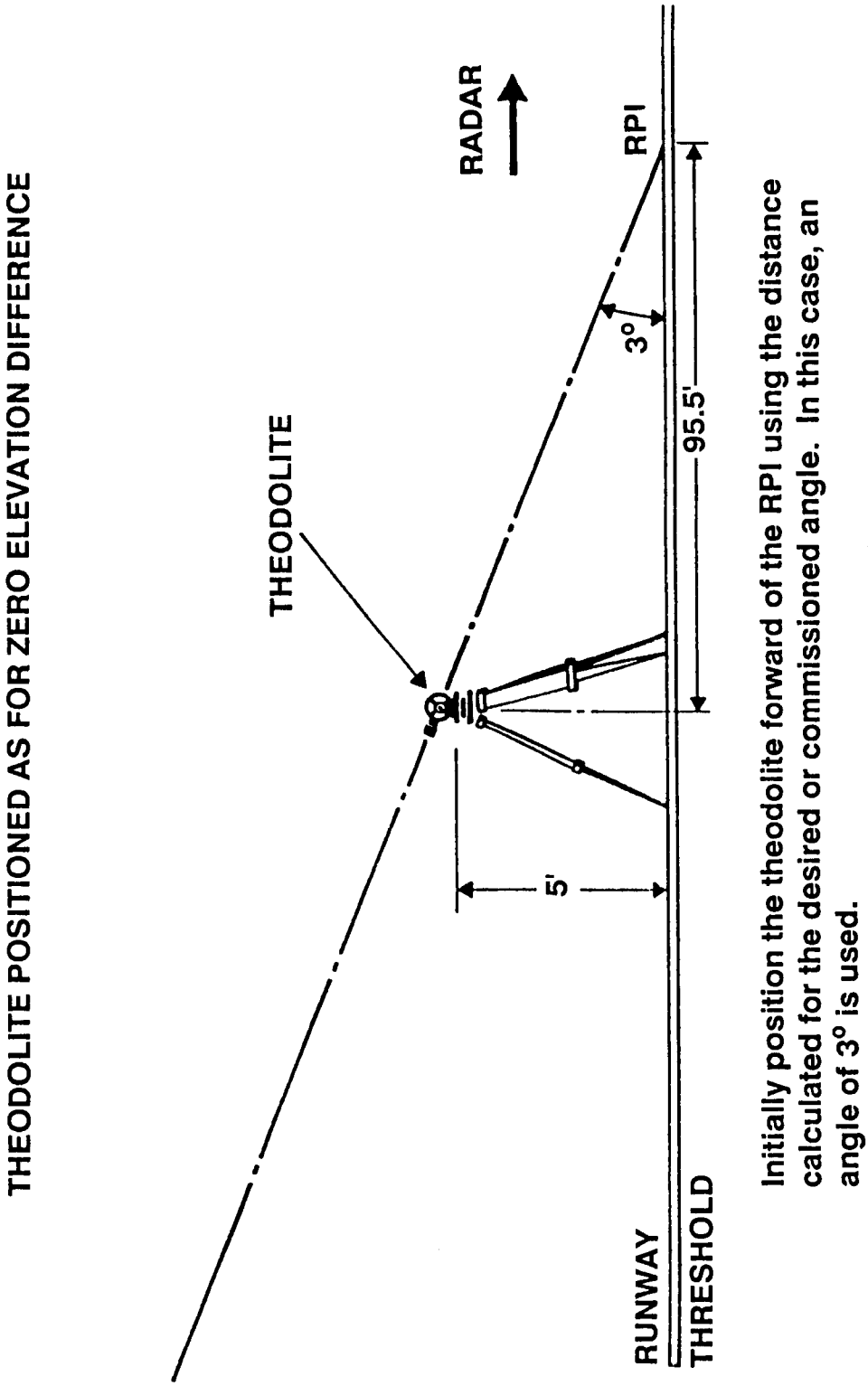

Figure D-11. Theodolite positioned for zero elevation difference

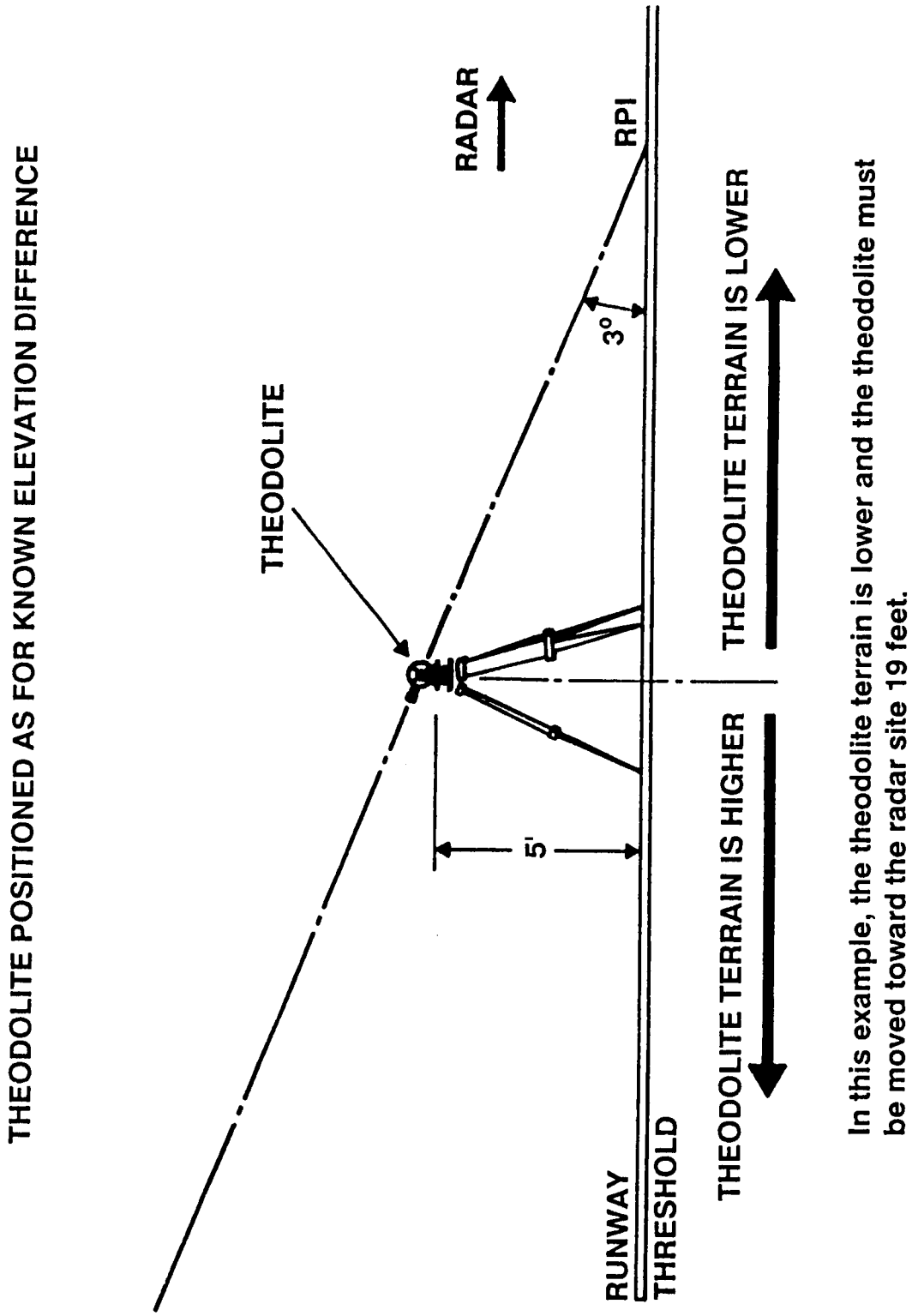

Figure D-12. Theodolite positioned for known elevation difference

D-7. FLIGHT CHECK COMMISSIONING FACTORS

a. Communications with GCA is essential during a PAR flight inspection. Only "on glide path" calls shall be recorded. Calls inside of decision height shall not be recorded. Radar shall be capable of detecting an aircraft a minimum of 7.5 NM from touch-down and within the azimuth and elevation sector portrayed on the radar scope.

b. The flight check is a team effort; therefore, good communications is vital. Aircrew members will continuously advise the theodolite operator of their intentions. The theodolite operator should ask questions if doubt exists and request assistance if problems arise.

NOTE: To correctly evaluate the equipment, it is important to record at least 15 to 20 "on glide path" calls.

c. Three approaches for each runway and one lower safe check are required for commissioning. The lower safe limit is normally 0.5° less than the glide path angle; however, obstacle clearance is all that is required.

d. To evaluate bends on the approach, range shall be given at least once per mile.

e. The theodolite is placed as close to the runway as possible and forward of the runway point of intercept. The locations of the marked reference points are calculated using the formulas shown below. Figure D-13 (page D-26) shows how to determine zero elevation differences.

(1) Formulas.

(a) OPPOSITE = ADJACENT X TANGENT; or O = A X T.

(b) ADJACENT = OPPOSITE/TANGENT; or A = O/T.

(c) TANGENT = OPPOSITE/ADJACENT; or T = O/A.

(2) Example. A 5 foot/3º tangent (.0524078) = 95.4 feet. Therefore, the theodolite would be placed 95.4 feet forward of RPI.

(3) Problems and solutions.

(a) With a 1,200-foot ceiling and a 3° angle, what is the distance? The solution is 1,200/3° (.0524078) = 22897.365/6076.1 = 3.76 NM. This is not acceptable.

(b) With a 2,000-foot ceiling and a 3° angle, what is the distance? The solution is 2,000/3° (.0524078) = 38162.275/6076.1 = 6.28 NM. This is acceptable.

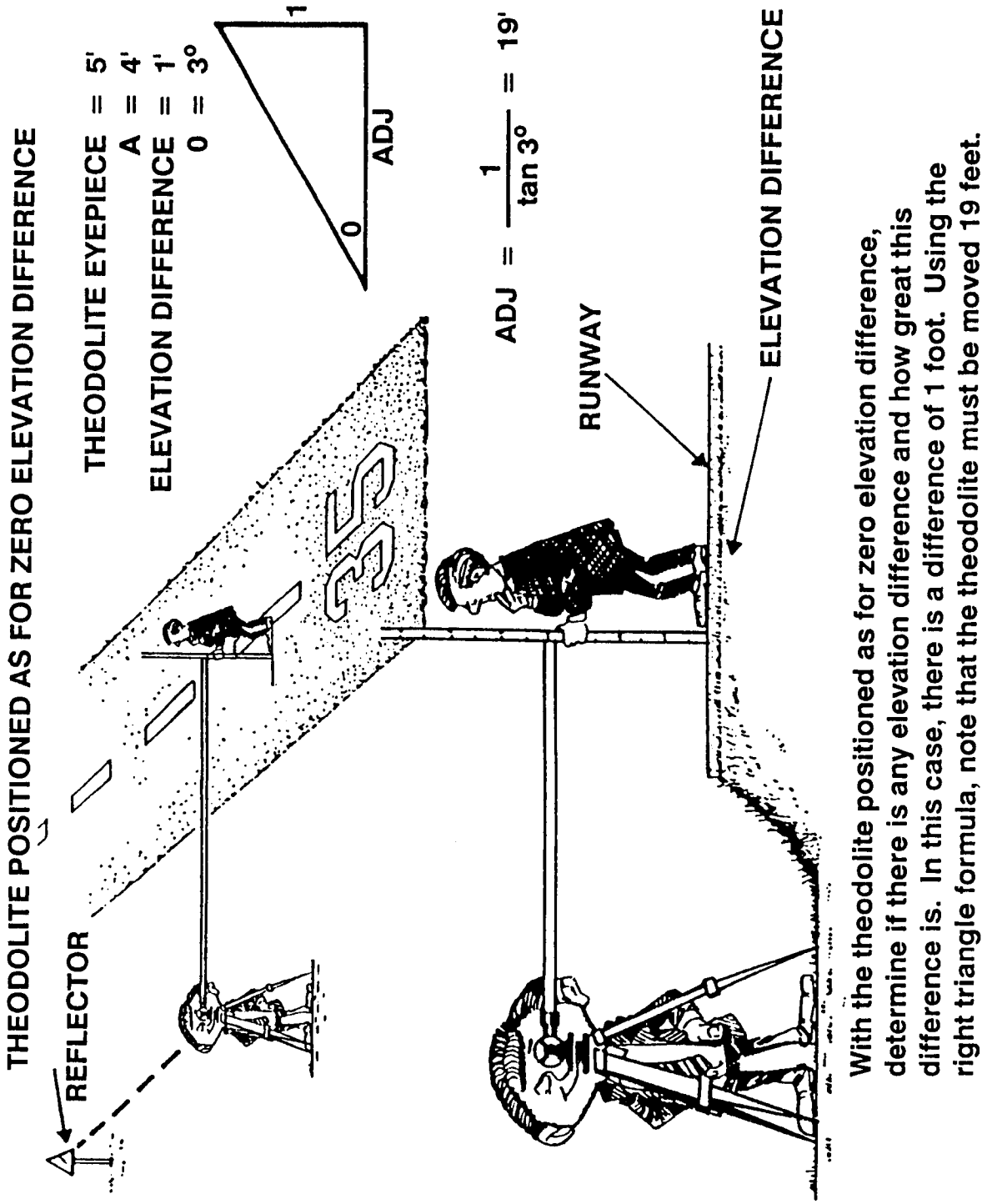

Figure D-13. Zero elevation difference calculated

D-8. PREVENTIVE MAINTENANCE

Theodolite operators must keep the instrument clean and protect it from becoming damaged through mishandling or neglect. Listed below are some of the measures operators should take to keep the theodolite in good condition.

a. Routine Care of the Instrument.

(1) Protect it from dust and foreign matter by covering it with the canvas hood while it is left standing unused or by packing it in its carrying case to transport it.

(2) Inspect it for loose or broken parts after it has been used.

(3) Take care to not twist off the brass screws when tightening them.

(4) Occasionally wipe off the instrument (except for the telescope lens) with a soft, clean cloth.

(5) Clean the telescope lens with a clean, soft-haired brush. Then wipe it clean with special lens tissue.

(6) If lens tissue is not available, use either a soft facial tissue or a linen handkerchief that has been washed several times. Be careful to not wipe hard because the lens surface is easily ruined by scratches.

(7) If it is necessary to clean the inside surface of the lens, unscrew the object lens barrel but do not remove the lens from the barrel.

(8) If it is necessary to clean the lens, unscrew the eyepiece but be careful to not touch the fragile cross hairs that are exposed.

(9) If the silvered surfaces of the tangent screw drum scales and the elevation scale become tarnished from contact with the operators' hands, remove the oxidation by rubbing the surfaces with bone black or by applying a few drops of clock oil. Leave the oil on the surfaces overnight, and then wipe the surfaces clean with a soft cloth. Leave a very thin film of oil on the surfaces to protect them. (The azimuth scale is covered and does not require routine cleaning.)

b. Replacement in Carrying Case.

(1) Remove the sunshade from the telescope, and place it on the baseboard with the long side away from the center of the baseboard. Place the dust cap over the object lens of the telescope. Fold the long sights down flat.

(2) Disengage the elevation tangent screw, and swing the telescope upside down so that the sights are on the bottom of the tube. Do this carefully so that the long rear right does not strike the transverse level. Point the object lens up at about a 30-degree angle. Leave the tangent screw disengaged.

(3) Disengage the azimuth tangent screw. Unscrew and remove the theodolite from the tripod head, keeping one hand on the instrument at all times. Cradle the instrument against the body with the forearm while replacing the baseboard on the theodolite by turning it clockwise.

(4) Rotate the theodolite until the rear end of the baseboard slides into the case and the wood blocks face outward. Reposition the telescope slightly, as necessary, to permit the baseboard to slide all the way in and the door on the carrying case to shut.

(5) Replace the screw cap protecting the treads of the tripod heads.

APPENDIX E

GROUND INSPECTION

TM 95-225 is the standard manual of flight inspection procedures. This appendix includes portions of that manual along with additional explanatory material. This guidance shall not relieve maintenance or supervisory personnel from executing procedures or emergency actions warranted by situations. Flight inspections are required for initially setting and commissioning the VOR, DME, or TACAN facility. Additional inspections are required to monitor the status of the facility from the users' point of view.

E-1. INSPECTION RESPONSIBILITY

Personnel responsible for ground inspection of Army ATC and NAVAID facilities can use the information in this appendix to establish criteria for determining the technical efficiency of these facilities. This guidance does not authorize agencies to assume ground inspection authority over facilities that are not now under their jurisdiction. The flight inspector in charge and the ATC chief or his representative are responsible for coordinating ground inspection activities. Flight inspection requirements for the various facilities are explained below according to--

- Circumstances not requiring a confirming flight inspection.
- Circumstances requiring a confirming flight inspection.

E-2. VOR FLIGHT INSPECTIONS

a. <u>Circumstances Not Requiring a Confirming Flight Inspection.</u>

(1) Replacement of any or all solid-state components.

(2) Replacement or repair of equipment components or units.

(3) Retuning of transmitter equipment.

(4) Measurement and adjustment of all modulation levels.

(5) Phasing adjustments.

(6) Installation or relocation of the DME mast, TACAN monitoring pole, or RCO antenna pole (if done according to current instructions).

(7) Replacement of the polarizer when reset to the previous setting; readjustment of the polarizer when a portable ground polariscope is used to optimize the facility for minimum vertical polarization.

(8) Installation or replacement of obstruction lights or painting of the antenna shelter.

(9) Replacement of the TBA-2 upper and lower bearings, spin motor, and radome.

(10) Accomplishment of other maintenance procedures if the conditions are restored to those existing at the time of the last flight inspection, as reflected in the facility records. These other procedures include the--

(a) Repair, adjustment, or replacement of the goniometer.

(b) Repair, replacement, modification, or repositioning of any fixed field detector used for facility monitoring.

(c) Replacement or modification of any signal evaluation element in the monitors.

(d) Adjustment or replacement of the RF transmission lines including feed lines, stubs, positioners, and coaxial or hybrid bridges.

(e) Adjustment or replacement of the VOR antennas or components including pedestals, loops, baluns, and supporting braces.

(f) Replacement, repair, or modification of test equipment. (If before and after measurements cannot be made on the VOR as specified, a confirming flight inspection will not be required if the tolerances for ground check are met.)

b. <u>Circumstances Requiring a Confirming Flight Inspection.</u>

(1) Major changes in local obstructions or buildings that may affect the signal strength, coverage, or courses.

(2) Replacement or installation of the TACAN/DME antenna or the antenna RF subassemblies (excluding transmission lines of the antenna).

(3) Major modernization of or corrective maintenance on the counterpoise.

(4) Changes in the facility operating frequency.

(5) Changes in the output level to increase or decrease the service area.

(6) Changes in the course alignment when done per FAA Order 8240.9.

(7) Tolerances for ground check cannot be met.

E-3. ILS FLIGHT INSPECTIONS OF THE LOCALIZER AND GLIDE SLOPE

a. Circumstances Not Requiring a Confirming Flight Inspection. The circumstances remain unchanged as stated in the appropriate manuals.

b. Circumstances Requiring a Confirming Flight Inspection.

(1) Changes in, for example, obstructions, buildings, and power lines that may affect the radiated signal.

(2) Construction or runway repairs in the general localizer or glide slope area if facility performance is doubtful.

(3) Replacement of critical ILS components, including RF bridges, electronic modulators, motor alternators, mechanical modulators, troughs or parts, and power dividers. (Transmitters should be replaced as complete units if they contain any of these critical components.)

(4) Replacement or repositioning of any of the antennas in the radiating array or antenna ground system.

(5) Change of the facility assigned the operating frequency.

E-4. TACAN FLIGHT INSPECTIONS

a. Circumstances Not Requiring a Confirming Flight Inspection.

(1) Replacement of any or all solid-state components.

(2) Replacement or repair of equipment components or units.

(3) Retuning of transmitter equipment.

(4) Measurement and adjustment of all modulation levels.

(5) Phasing adjustments.

(6) Installation or relocation of the DME mast, TACAN monitoring pole, or RCO antenna pole (if done according to current instructions).

(7) Replacement of the polarizer when reset to the previous setting; readjustment of the polarizer when a portable ground polariscope is used to optimize the facility for minimum vertical polarization.

(8) Installation or replacement of obstruction lights or painting of the antenna shelter.

(9) Replacement of the RTA-2 upper and lower bearings, spin motor, and radome.

(10) Accomplishment of other maintenance procedures if the conditions are restored to those existing at the time of the last flight inspection as reflected in the facility records. These other procedures include the--

(a) Replacement or modification of any signal evaluation element in the monitors.

(b) Adjustment or replacement of the RF transmission lines including feed lines, stubs, positioners, and coaxial or hybrid bridges.

(c) Replacement, repair, or modification of test equipment.

b. <u>Circumstances Requiring a Confirming Flight Inspection.</u>

(1) Major changes in local obstructions or buildings that may affect the signal strength, coverage, or courses.

(2) Replacement or installation of the TACAN/DME antenna or the antenna RF subassemblies (excluding transmission lines of the antenna).

(3) Major modernization of or corrective maintenance on the counterpoise.

(4) Changes in the facility operating frequency.

(5) Changes in the output level to increase or decrease the service area.

(6) Changes in the course alignment when done per FAA Order 8240.9.

(7) Tolerances for ground check cannot be met.

E-5. NDB FLIGHT INSPECTIONS

a. Circumstances Not Requiring a Confirming Flight Inspection. The circumstances remain unchanged as stated in the appropriate manuals.

b. Circumstances Requiring a Confirming Flight Inspection.

(1) Changes in the output level to increase or decrease the service area.

(2) Changes in the antenna or transmitter that may affect facility coverage.

E-6. MARKER BEACON FLIGHT INSPECTIONS

a. Circumstances Not Requiring a Confirming Flight Inspection. The circumstances remain unchanged as stated in the appropriate manuals.

b. Circumstances Requiring a Confirming Flight Inspection. Any changes or adjustments to transmitter equipment, transmission lines, and antenna array that may affect the shape or coverage of the radiated pattern require a confirming flight inspection.

E-7. RADAR FACILITY FLIGHT INSPECTIONS

NOTE: Special flight inspections will be accomplished per paragraph 1.04.4 in TM 95-225.

a. Circumstances Not Requiring a Confirming Flight Inspection. The circumstances remain unchanged as stated in the appropriate manuals.

b. Circumstances Requiring a Confirming Flight Inspection.

(1) When a reported deficiency is not susceptible to exact measurement or to verification by ground measurement.

(2) After an aircraft accident in which the radar facility may have been involved.

(3) After an antenna change or antenna tilt change (surveillance radar) or when engineering judgment indicates a probable change in the antenna radiation pattern. (On a terminal-type surveillance radar with a variable tilt antenna and remote tilt indicator, the normal tilt shall be that tilt established during a flight inspection. Anytime there is a deviation from that tilt, this type of radar shall not be considered certified for use in the NAS. The Army shall not use it until normal tilt is restored.)

(4) After a modification or other circumstance that, in the judgment of the individual in charge, requires facility performance to be recertified.

c. Periodic Operational Checks of the Radar System. In addition to the flight commissioning flight inspection, periodic operational checks of the radar system will be performed by the FAA, Army flight inspection aircraft, and air traffic controllers. These checks will supplement the performance assurance obtained from observing the system during daily operations. These checks consist of--

(1) Observing identified targets under control within the sector and comparing them against data obtained during the commissioning flight inspection or against minimum performance requirements developed at the facility. These targets may be flight inspection aircraft or targets of opportunity.

(2) Checking the technical performance of the facility against the established performance data base of the facility.

E-8. COMMUNICATIONS FACILITIES

En route and terminal area communications are provided by the various types of air/ground facilities; for example, FCCs, FSSs, and control towers. The facilities consist of air/ground transmitter and receiving equipment, recording equipment, and the necessary control equipment.

a. Communications facilities do not require a flight inspection. All maintenance procedures of the communications facility can be accomplished and the facility returned to unrestricted operation without recourse to a flight inspection.

b. All communications equipment must meet the standards and tolerances outlined in the applicable technical manual, instruction book, or handbook. This equipment and the related checks are given below.

(1) **Transmitter and associated antenna.**

(a) Power output at the transmitter.

(b) Power input at the antenna.

(c) Audio frequency response.

(d) VSWR at the transmitter.

(e) VSWR at the antenna.

(f) Modulation percentage.

(g) Audio limiting action.

(h) Output frequency.

(i) Intermodulation and cross modulation between transmitters capable of simultaneous operation.

(j) Audio distortion.

(2) **Receiver and associated antenna.**

(a) Sensitivity versus output level.

(b) Signal-to-noise ratio.

(c) Squelch action.

(d) AGC threshold.

(e) AGC regulation of the audio level.

(f) Power output capability.

(g) Selectivity at 0 dB and 30 dB points.

(h) Nonsymmetry at 6 dB and 60 dB points.

(i) Receiving frequency.

(j) Audio frequency response.

(k) Audio distortion.

(l) Insulation and resistance of antenna system.

(m) Continuity of antenna system.

(3) Recorders and reproducers.

(a) Frequency response.

(b) Signal-to-noise ratio.

(c) Cross talk.

(d) Mechanical tolerances, if appropriate.

(e) Bias oscillator level, if appropriate.

(f) Amplifier gain.

(g) Audio quality.

(h) Automatic changeover, if appropriate.

(4) Audio and switching system.

(a) Gain of each amplifier.

(b) Frequency response of each amplifier.

(c) Signal-to-noise ratio of each amplifier.

(d) Amplifier limiting action, if appropriate.

(e) Audio level at the input and output of each amplifier in the system and at other such points as appropriate.

(f) Interchannel cross talk.

(g) Noise level of each channel.

E-9. ADDITIONAL REQUIREMENTS

Facilities should be visited frequently enough to ensure accurate and reliable operation according to the criteria established in this guidance. Each time a facility is visited, the maintenance

technician responsible for the facility shall verify facility performance on the basis of one or more of the criteria given below.

a. Visual and Aural. On every visit, verify by visual and aural observation whether equipment is operating normally. This includes, but is not limited to, meter readings, pilot light indications, extraneous noises, and excessive heat.

b. Monitoring. On scheduled visits and as required, certify whether the facility operation is satisfactory by noting local monitoring information. Monitoring may include a control line check to determine that control and remote monitor functions are satisfactory.

c. Meter Readings. On scheduled visits, if applicable, record meter readings and compare them with those previously recorded on station records.

d. Performance Standards and Tolerances. On scheduled visits and as required, determine whether the facility meets the performance standards and tolerances established in this guidance, the technical manuals, or the handbooks.

e. System Ground Check. On scheduled visits and as required, perform a ground check and compare the results with the reference ground check error curve (VOR) and/or with data obtained at the time of the last flight inspection. Evaluate these data, and determine that facility performance has not departed appreciably (beyond tolerance) from the previous system ground check recordings.

f. Flight Inspection. On scheduled visits or as requested, determine whether facility performance is satisfactory based on the flight inspection evaluation. Ground check data shall be recorded immediately following any flight inspection.

NOTE: An accident inspector may request a flight inspection on any NAVAID suspected to have been a contributing factor in an accident or a mishap.

APPENDIX F

ATC MAINTENANCE CERTIFICATION PROGRAM

Section I. Program Objectives and Certification Responsibility, Authority, and Process

This section specifies the procedures for implementing and maintaining a uniform certification program for US Army ATC maintenance technicians. This guidance applies to DA civilians and military personnel (SPC and above, ATC systems and subsystems repair specialists in MOS 93D) who perform maintenance on Army-owned ATC equipment.

F-1. PROGRAM OBJECTIVES

The US Army ATC Maintenance Certification Program establishes the uniform minimum standards for measuring the technical proficiency of ATC maintenance technicians. It also ensures the technical competence of all maintenance personnel having direct responsibility for the safe operation of systems/subsystems/equipment critical to air navigation and ATC. The program establishes the procedures for documenting the technicians' proficiency, granting authority, and assigning certification responsibility.

F-2. CERTIFICATION RESPONSIBILITY AND AUTHORITY

The responsibility for the certification program is shared by the USAATCA, the certifiers (facility maintenance chiefs and battalion/company 93D personnel), and the various other maintenance chiefs and supervisors. Their responsibilities are listed below.

a. <u>US Army Air Traffic Control Activity.</u> Only examinations developed by USAATCA shall be used as a basis for issuing certification authority. This certification may be used only for the specified ATC system/subsystem/equipment. The USAATCA shall--

- Provide overall direction to and guidance on the program.
- Identify and specify the theory and performance requirements.
- Standardize and continually evaluate and update all phases of the program.

- Develop, validate, review, and revise theory and performance examinations.
- Determine the systems to be added or deleted from the program and inform the appropriate individuals/elements.
- Print and distribute the examinations and certificates.
- Resolve comments, questions, and disputes about the examinations.
- Maintain data base files containing complete verification records.
- Designate all examining officials (in writing).

b. Certifiers (Facility Maintenance Chiefs and Battalion/ Company 93D Personnel).

- Exercise control of the program for the facility/ battalion/company of assignment.
- Identify positions that require certification.
- Prescribe the extent of preparation needed for the theory and performance examinations.
- Schedule the theory and performance examinations. (This responsibility may be delegated.)
- Request the theory and performance examinations from USAATCA (in writing).
- Administer the theory and performance examinations. (This responsibility may be delegated.)
- Request the certificates for regular, temporary, and interim certification from USAATCA (in writing).
- Maintain files containing complete verification records. (This responsibility may be delegated.)
- Exercise the proper security precautions to avoid the compromise of theory examinations. (Security precautions are not required for the performance examinations.)
- Advise the commander on the status of ATS maintenance certification.

- Coordinate with the ATC facility chief for NOTAM if training is required on any in-use operational system/subsystem/equipment.

- Record the annual review on DA Form 3479-R. The following guideline shall be used in conducting the annual review of each technician's certification records: Receive input from the first-line supervisor affirming that the technician has maintained the certification proficiency level and is assigned only those certification responsibilities supported by valid certification authority. This input is mandatory and shall be documented.

  NOTE: All certification authority granted prior to the last review date shall be accepted as valid. The guideline above is solely for the purpose of reducing the work load and shall not be interpreted as negating any of the requirements established in the program.

c. <u>Site maintenance, Chiefs, Shift Maintenance Chiefs, and Company/Platoon Maintenance Supervisors.</u> These maintenance chiefs/supervisors shall--

- Maintain files containing complete technician certification and related training records on each technician.

- Provide the technician with the training materials needed to accomplish comprehensive training on the systems/subsystems/equipment.

- Request the theory and performance examinations from the facility/battalion/company maintenance chief.

- Coordinate with the certifier about administration of the examination.

- Request reexaminations and evaluations from the facility/battalion/company maintenance chief.

- Develop and document OJT on the site-specific systems/subsystems to support the certification program.

- Advise the commander on the status of ATS maintenance certification.

- Coordinate with the facility maintenance chief for NOTAM if training is required on any in-use operational system/subsystem/equipment.

F-3. MAINTENANCE TECHNICIAN CERTIFICATION

a. Certification Based on Previous Experience. For previous experience to be creditable, as a minimum, the technician must have received a satisfactory performance rating for a 12-month period prior to the mandatory certification date. During this period, the technician must have had full maintenance or other equivalent technical responsibility on the system/subsystem/equipment for which he is seeking certification. The time period during which he obtained this experience shall be entered on the technician's certification and related training record. The USAATCA shall review the information from the certifier (facility maintenance chief/battalion 93D personnel) and determine the certification authority. A written request for certification shall be sent through the certifier to USAATCA. Certification shall be granted for "Grandfather Clause" on an individual basis.

b. Certification Based on Program Completion. The certification program must be administered efficiently to provide qualified technicians that meet the stringent requirements for properly maintaining ATC equipment. The technician must satisfy the theory and performance requirements specified in this appendix to meet qualification requirements of the assigned position. After completing qualification requirements, the technician may be assigned the responsibility of certifying specific systems/subsystems/equipment. The flow chart in Figure F-1 (page F-7) depicts the ATS maintenance technician certification process, which consists of the eight steps given below.

(1) Step 1. The technician is a graduate of the MOS 93D maintenance school or is a newly hired DA civilian.

(2) Step 2. The technician is assigned to a tactical or fixed-base unit.

(3) Step 3. The technician enters the maintenance training program. This step involves the--

- Establishment of training records.
- Orientation on equipment.
- Orientation on facilities and their locations.
- Initial counseling on maintenance and shop operations.
- Statement of performance expectations.
- Orientation on safety.

- Overview of classes.
- SOP requirements.

(4) **Step 4.** The technician enters a phased training program on individual systems or equipment; for example, AN/TSQ-71B and AN/FPN-40. This step of the certification process consists of the three phases explained below.

(a) **Phase I.** The technician is trained on the theory of operation, system/subsystem/equipment operational characteristics, power requirements, frequency spectrum, and normal operating standards. Also covered in this phase are the required reference material, forms and records, and maintenance allocation charts; PMCS and TMDE procedures and requirements; and local SOP requirements.

(b) **Phase II.** The technician is trained on alignments on systems and subsystems, sequential and system interface alignment procedures, and TMDE requirements and settings. The training also includes reference material and local SOP requirements and forms and records completion.

(c) **Phase III.** The technician is trained on system and subsystem fault localization, schematic use, maintenance allocation charts, and major and minor component installation/removal procedures. The training also includes tool requirements and usage, safety and quality control requirements, supply procedures, and reference material and local SOP requirements.

(5) **Step 5.** When the technician has satisfactorily completed the three phases in (4) above, the certifier will request the examination from USAATCA (in writing).

(6) **Step 6.** The certifier administers the examination to the technician in two parts as explained below. All theory examinations are "closed book."

(a) **Part 1.** The technician completes the comprehensive written examination, which consists of questions on Phases I, II, and III.

(b) **Part 2.** The technician is given the hands-on performance examination on Phases II and III.

(7) **Step 7.** The certifier grades the examination and sends it with the answer sheet to Commander, USAAVNC, ATTN: ATZQ-ATC-MO, Fort Rucker, AL 36362-5265. If the technician passes the examination, the USAATCA Director issues the certification. If the technician fails the examination, the Director sends the certifier a letter specifying the areas in which the technician had problems.

(8) **Step 8.** The flow process shown in Figure F-1 is continued when the technician encounters a new system or new equipment or has a permanent change of station. The maintenance chief reviews the technician's training records, evaluates him, and then takes the appropriate steps.

F-4 . EXAMINER PREREQUISITES

The local commander is responsible for selecting examiners who will demonstrate qualities of objectivity and fairness in conducting an examination. The prerequisites for theory and performance examiners are given below.

a. Theory of Operation Examiners.

(1) The examiner shall be designated, in writing, by USAATCA.

(2) Because the duties of the examiner consist of monitoring only, he need not hold certification authority.

b. System Performance Examiners.

(1) The examiner shall be designated, in writing, by USAATCA.

(2) The examiner must possess certification authority for the entire system on which he examines another technician. To initially start the certification process for a particular system/subsystem/equipment, the performance examiner may be issued interim certification authority.

(3) The examiner must be an employee of the US Army.

(4) The examiner must not occupy a position under the supervision of the employee he examines.

(5) Performance examiners external to local maintenance operations are preferred; for example, training relief supervisors from another shift/crew/unit or designated personnel from another facility.

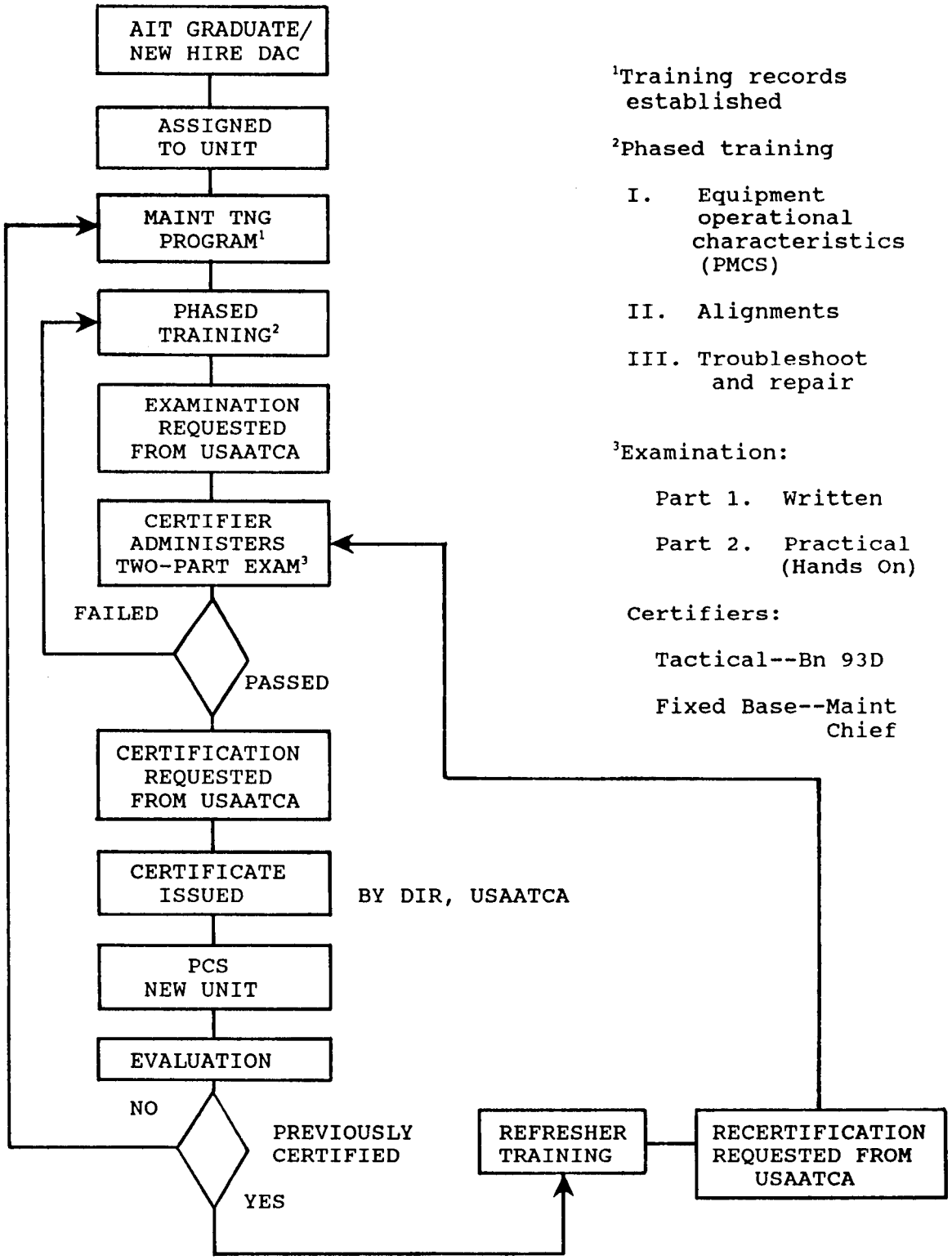

Figure F-1. ATC maintenance technician certification process

Section II. Theory of Operation and Performance Examinations

All theory and performance examinations used in the certification program are developed and validated by the USAATCA, Fort Rucker, AL 36362-5265. These examinations shall be used to determine whether the examinee knows the theory and practical techniques required to perform maintenance and diagnose and correct deficiencies on ATC systems/subsystems/equipment. Comprehensive sources for examination development are technical manuals, field manuals, system handbooks, manufacturer manuals, joint acceptance standards, and senior maintenance personnel. Equipment examinations are comprehensive in scope, covering not only the equipment within the system but also the auxiliary equipment considered to be part of the system.

F-5. THEORY (CONCEPTS) WRITTEN EXAMINATIONS

a. Scope of Theory Examinations. The written examination will test the technician's understanding and knowledge of a wide range of information. The questions will cover system-oriented theory, operational characteristics, subsystems, power requirements, frequency spectrum, and normal operating standards. Some questions require both calculations and analytical reasoning.

b. Requests for Theory Examinations.

(1) The maintenance supervisor will send written requests for theory examinations through the certifiers (facility maintenance chief/battalion 93D personnel) to USAATCA.

(2) An examination shall not be requested unless there is a reasonable expectation that the technician will pass it. Under no circumstances shall it be used as a screening device to determine the probability of personnel passing corresponding technical maintenance courses.

c. Administration of Theory Examinations. The examiners shall follow the procedures below when administering the theory examinations. The examiners shall--

- Understand and apply mandatory secure-handling requirements to protect program integrity.
- Not discuss or disclose the contents of examinations.
- Prepare an appropriate area for administering examinations and give the examinee any required instructions.

- Caution the examinee on the official nature of the examinations and the penalties involved for disclosure of the contents.

- Allow examinees to use only the reference material provided by the examiner during examinations.

- Control and time examinations as prescribed and process completed examinations as instructed.

- Store examination papers in a secure file.

NOTE: No one other than the examiner shall be allowed in the immediate presence of the examinee(s) while the examination is in progress.

d. Grading of Theory Examinations.

(1) Theory examinations will be graded by the certifier, and the examinations with the results will be mailed to USAATCA. The tentative scheduled date for the performance examination and the request for interim certification, if applicable, also will be mailed to USAATCA.

(2) If the technician fails the theory examination but the grade exceeds 70 percent, USAATCA will send a summary of the weak points to the certifier. If the grade is below 70 percent, USAATCA will not define specific areas and the technician shall be required to review all areas of the examination.

(3) The certifiers (facility maintenance chief and battalion/company 93D personnel) shall distribute the theory examination report for the technicians.

e. Security in Handling Theory Examinations. Everyone in the examination chain concerned with the certification process must maintain security in the handling of written examinations. Compromise of examinations in any form is a serious violation of the rules of conduct and discipline. Any violation shall require that the appropriate official take disciplinary action. Any person having personal knowledge of a compromise on any segment of the written examination shall advise USAATCA immediately of the details. The security requirements of theory examinations include (but are not limited to)--

- Placement of documents in locked storage (secured with a combination lock or the equivalent).

- Accountability for all examinations after their completion.

- Return of all working notes upon completion of examinations.
- Refusal to discuss or transfer examination content.
- Absolutely no reproduction of examinations.
- Use of only clean schematics in the technical manuals provided by the examiner.

F-6. PERFORMANCE EXAMINATIONS

a. Scope of Performance Examinations.

(1) Performance examinations are used to demonstrate a technician's proficiency. These examinations vary in length according to the complexity and scope of the system/subsystem/equipment. The use of reference material is encouraged during the examination. The examinee makes the actual adjustments, alignments, or software program changes; evaluates system performance; and corrects equipment maladjustments. The examiner observes the results and verifies the accuracy of the adjustments, alignments, or changes.

(2) The examiner may deviate from the printed examination to ensure that the examinee has the required proficiency. When deviating, the examiner must be careful to not fail the examinee on a nonstandard operation. The examinee should be told of any deviations before taking the examination.

(3) When OJT and the performance examination are both available, the examination may be incorporated as an integral part of OJT. Where no published OJT course exists, the examination may be used as a study outline. When the examination is so used, the individual who provides the OJT should not also be the examiner.

(4) The examiner may make only minor changes to the performance examination to make it compatible with the system used. Operations and questions other than those given on the performance examination may be used to assure the examinee's total system knowledge. When maintenance procedures or system configurations change, facilities shall recommend that changes be made to the examinations. Recommendations for changes to examinations shall be sent to Commander, US Army Aviation Center, ATTN: ATZQ-ATC-MO, Fort Rucker, AL 36362-5265.

b. Administration of Performance Examinations.

(1) The distribution of the performance examination prior to the examination is encouraged. The technician shall be made thoroughly familiar with the examination requirements and related test equipment during OJT.

(2) Except in instances where two people are required to make a particular adjustment or alignment, the examinee will complete the examination unassisted.

c. Grading of Performance Examinations. Once the examinee has completed an operation, the examiner grades the performance. Failure of only one of certain operations constitutes failure of the entire examination.

NOTE: Secure handling of the performance examination is not required.

F-7. EXAMINATION REVIEW AND EVALUATION

Certification examinations are constantly reviewed and updated by USAATCA. Examinations are combined when redundancy is discovered or revised when found to be obsolete. Examiners may detect questions that are not correct or may administer an examination that is not relevant to the system/subsystem/equipment for which the technician is being tested. In either case, examiners should include an appropriate comment with the examination and results sent to USAATCA.

F-8. EXAMINATION FAILURE POLICY

a. If a technician requiring certification authority fails an examination, the supervisor shall promptly prepare a written improvement program. The improvement program will be documented in the technician's official certification and related training record. The program will contain the--

- Training for the deficient areas identified.
- Recommended study material.
- Method for measuring progress.
- Time schedule for improvement program completion.
- Name of instructor(s) and method of documenting training.

b. Failing a theory examination forfeits the technician's eligibility to take a performance examination. If a technician passes the theory examination but fails the performance examination, he is not required to take a new theory examination if he takes the performance examination again within 4 months. The certifier must notify USAATCA, in writing, of the tentative scheduled date for the new performance examination; USAATCA will then verify the date. (Refer to the Glossary concerning interim certification.)

c. The certifier will ensure that he uses a different examination each time a technician retakes the examination. A technician may not take a theory or performance examination more that three times in a 12-month period.

d. The USAATCA must retain examinations, answer sheets, comments, and any other information pertaining to a failed examination for not less than two years.

Section III. Records File, Forms, and Equipment Certification Requirements

This section explains the required files, forms, and records for administering the maintenance certification program. It explains the contents of the records folder and how to complete the forms and lists the equipment requiring certification authority.

F-9. RECORDS FILE

a. An official certification and related training file will be established and maintained for each technician assigned to the maintenance section requiring certification authority. This file will be under the control of the facility maintenance chief/platoon/section. It will be kept in an area that is accessible only to authorized personnel who have been properly screened, cleared, and trained. Information in the file shall be protected according to privacy act regulations.

b. Each official training file shall contain documentation substantiating the technician's qualifications to possess certification authority or have responsibility on specific systems/subsystems/equipment. The file shall be used as a complete historical record of the technician's certification progress. It shall contain such background data and supporting documents as reports, certification responsibility assignments/withdrawals, and granting/revocation of certification authority. This informational file shall contain documentation to support the program responsibilities assigned to the office maintaining the file.

c. The pertinent records will be kept in a straight cut, 9 1/2 by 11 3/4-inch, heavy-duty kraft file folder (NSN 7530-00-222-3443). Each folder will be maintained according to AR 25-400-2). The folders will be filed alphabetically by the technician's last name. The following information will be entered on the front cover of the file folder: Air Traffic Control Maintenance Certification and Related Training Records Folder, United States Army. If found return to: Commander, USAAVNC, ATTN: ATZQ-ATC-MO, Fort Rucker, AL 36362-5265. The folder will contain the--

- Certification and related training received.
- Performance examination sheets.
- Theory (concepts) and performance examination results.
- Grades and certifications obtained through training.
- Other correspondence related to training and certification.
- Responsibility assignment.

d. The left side (foldout portion) of the folder will contain DA Forms 3479-9-R and 3479-10-R (see paragraph F-10 below). No other forms, records, or papers shall be on this portion of the folder. The right inside (foldout portion) of the folder shall contain performance examination results as well as other correspondence related to ATC maintenance training.

e. Those forms and records listed in d above are the only materials authorized to be kept in the certification and related training records folder. Such information as reclassification, counseling, and appraisals will not be retained in this folder. However, pertinent information will be annotated in the remarks blocks on the forms.

f. Upon request, technicians may review the contents of their records folder. The folders also are available for review to--

- USAATCA representatives.
- Commanders.
- FAA authorities.
- Supervisors (training or maintenance).

- Aircraft accident investigators.
- Mobile maintenance contact teams.
- Systems managers and their authorized representatives.
- Certifiers who administer theory (concepts) and performance examinations.

g. When a technician is reassigned to another maintenance facility/shop, the losing organization shall note the effective reassignment date and location (if known) on his DA Form 3479-9-R. The ATC facility retains the active paper records until that individual transfers. These paper records are transferred with the military personnel records jacket or civilian personnel folder as appropriate. Automated management information at the primary location is retained until no longer needed for current operations. AR 25-400-2 explains record retention and disposal procedures.

h. When civilian and military personnel retire or separate from federal service, their records are retired. Civilian personnel records are sent to the National Personnel Records Center, 111 Winnebago Street, St Louis, MO 63118; military personnel records are sent to the US Army Personnel Center and US Army Reserve Components Personnel and Administration Center, 9700 Page Boulevard, St Louis, MO 63132. The records are retained for 75 years after the individual's date of birth. If the date of birth cannot be ascertained, the records are retained for 60 years after the date of the earliest document in the folder.

F-10. FORMS

The ATC chief/facility maintenance chief/company maintenance chief at all Army ATC facilities and tactical units will maintain the special forms associated with the ATC Maintenance Personnel Certification Program. The chief will maintain DA Forms 3479-9-R and 3479-10-R on each assigned or attached technician (military and civilian). Blank copies of these reproducible forms are at the back of this manual.

a. <u>ATC Personnel Certification and Related Training Records.</u> DA Form 3479-9-R will be used to maintain a record of the status of each individual in the certification program for the associated facility/shop. It specifies the technician's certification authority by the system/subsystem/equipment for which there is an associated examination. The information on the form shall include (but is not limited to)--

- All certification authority issued, including interim.

- All certification-related schooling, correspondence study, OJT, out-of-house training, and certification program examinations. The information shall also include examination results (passed, failed) and completion dates of the training and examinations.

- Signature/initials of responsible officials (maintenance chief/maintenance training personnel).

- The beginning and ending dates of acquired experience.

- The date that certification authority was revoked on specific systems/subsystems/equipment.

Instructions for preparing DA Form 3479-9-R are given below. All entries will be made in ink unless indicated otherwise.

(1) **Block 1.** Enter the technician's name.

(2) **Block 2.** Enter the technician's SSN.

(3) **Block 3.** Enter (in pencil) the technician's grade/rank; for example, GS-11 or SSG.

(4) **Block 4.** Enter the specific system/subsystem/equipment on which the technician is qualified or will qualify; for example, TVOR, AN/TSQ-71B, FSC-92, or ASR-9.

(5) **Block 5.** In column a, enter the method by which system requirements were met (refer to footnote 1 on DA Form 3479-9-R). In column b, enter the date (DDMMYY) the technician successfully completed the theory (concepts) requirements; for example, 101192. In column c, the responsible official writes his initials.

(6) **Block 6.** In column a, enter the method by which performance requirements were met (refer to footnote 1 on DA Form 3479-9-R). In column b, enter the date (DDMMYY) that the technician successfully completed performance requirements. In column c, the responsible official writes his initials.

(7) **Block 7.** In column a, enter the date (DDMMYY) that the certification authority requirements were fully met and the theory (concepts) examination was successfully completed (refer to footnote 2 on DA Form 3479-9-R). In column b, enter the date (DDMMYY) that the certification authority was revoked.

(8) **Block 8.** Enter the technician's duty station; for example, Robert Gray AAF, Fort Hood or 1st Pit, Co B, 4-58th.

(9) Block 9. Enter the date (DDMMYY) of that particular action.

(l0) Block 10. Enter the type of action or remarks that pertain to the entry in block 9.

(11) Block 11. Self-explanatory.

(12) Block 12. Enter the system/subsystem/equipment for which the technician took the training or examination.

(13) Block 13. Enter the course number; for example, (if applicable) the MOS (93D), FAA, or ASI course number.

(14) Block 14. In column a, enter C or P (refer to footnote 3 on DA Form 3479-9-R). If the training or examination does not pertain to either, leave blank. In column b, enter the edition number of the theory (concepts)/performance examination. In column c, record the results of the examination or course by entering either P or F (refer to footnote 4 on DA Form 3479-9-R). In column d, enter the completion date (DDMMYY) of the examination or course.

(15) Block 15. Enter remarks pertaining to the technician's training; if desired, continue remarks on an attached sheet.

(16) Block 16. If the entries in blocks 12 through 15 pertain to examination results, the certifier writes his initials in block 16. If the entries pertain to training, the maintenance chief writes his initials in block 16.

b. Responsibility Assignment. DA Form 3479-10-R is used to evaluate a technician's progress toward becoming certified or to assess unsatisfactory progress in a training program. The technician will be told what he must do to improve and why. This information may include study assignments or additional OJT. DA Form 3479-10-R is also used to officially assign certification responsibility/authority to the technician. Instructions for completing DA Form 3479-10-R are given below.

(1) Block 1. Enter an X in the appropriate box. Enter the revision number if applicable.

(2) Block 2. Enter the date (DDMMYY).

(3) Block 3. Self-explanatory.

(4) Block 4. Enter the technician's name.

(5) **Block 5.** Enter the technician's duty location; for example, Fort Hood or Camp Stanley, Korea.

(6) **Block 6.** Enter the position title and rank/grade of the technician.

(7) **Block 7.** Enter the immediate supervisor's name.

(8) **Block 8.** Enter the location and office telephone number of the immediate supervisor.

(9) **Block 9.** In column a, enter the type of equipment for which the technician is assigned responsibility; for example, TVOR, ILS, or AN/TSW-7A. In column b, enter the identification of the station or location: for example, PTK CNS or Starns Beacon, Cairns Tower.

(10) **Block 10.** (Refer to maintenance and certification codes on the back of DA Form 3479-10-R.) In column a, enter the appropriate maintenance responsibility code. In column b, enter the appropriate certification responsibility code.

(11) **Block 11.** Enter the effective starting and ending dates (DDMMYY) of the responsibility. The ending date is when the responsibility is no longer required or has been revoked.

(12) **Block 12.** Enter comments pertaining to certification responsibilities; if there are no comments, so state by entering "None."

(13) **Block 13.** Enter special instructions for restrictions/limitations, and enter other remarks. (If certification code LC is entered in block 10, the limitations must be shown in block 13. If code SSC is entered in block 10, the equipment must be listed in block 13.)

(14) **Block 14.** Enter the technician's name, title, and grade/rank. The technician will sign in this block.

(15) **Block 15.** Enter the immediate supervisor's name. The immediate supervisor will sign in this block.

(16) **Block 16.** Enter the name of the certifier (facility maintenance chief or battalion/company 93D personnel). The certifier will sign in this block.

NOTE: The names and titles may be printed rather than typed in blocks 14 through 16.

(17) Block 17. Enter an X in the box marked FILE if this is the file copy, and indicate who was given a copy of this DA Form 3479-10-R. If an X is entered in the OTHER box, specify the personnel or element receiving a copy.

F-11. RECORDS REVIEW AND RETENTION

The maintenance chief must review the technician's folder contents annually and annotate "Annual Review" in block 13 of the DA Form 3479-10-R. As the technician becomes certified or completes related training, the record will be annotated within 15 days. Once the maintenance chief reviews and signs the records, all performance examination results will be placed in the order that the examinations were taken with the latest on top. These results will be retained in the record as long as equipment certification authority remains valid. These folders are permanent records and will remain active while an individual is an ATC maintenance technician. The records of a reclassified technician shall be returned to the individual upon completion of reclassification actions.

F-12. CONTESTS AND APPEALS

Trainees/technicians may agree or disagree with the review and make the comments that they feel are necessary. They will place their comments on a separate sheet and attach the sheet to the review. The reviewing authority ensures that the forms are filled out properly, makes the appropriate entries/comments, and signs and dates the form. The technicians may contest or appeal the entries on DA Form 3479-9-R. Complaints will be directed through channels to Commander, USAAVNC, ATTN: ATZQ-ATC-MO, Fort Rucker, AL 36362-5265.

F-13. EQUIPMENT CERTIFICATION

Figure F-2 lists the ATC tactical and fixed-base equipment that requires certification.

TACTICAL EQUIPMENT	MODEL
ATC LANDING CONTROL SYSTEM	AN/TSQ-71B
FLIGHT COORDINATION CENTRAL	AN/TSC-61B
RADIO BEACON SET	AN/TRN-30V(1)(2)
INTERROGATOR SET	AN/TPX-44

FIXED-BASE EQUIPMENT	MODEL
RADAR SYSTEM	AN/FPN-40
RADAR SYSTEM	AN/FSQ-84
RADAR SYSTEM	AN/FPN-66
RADAR SYSTEM	ASR-4/5/6/7/8/9
RADIO BEACON SET	T-1428/FRN TN-588-FRN R-2176/FRN
VERY-HIGH FREQUENCY OMNIDIRECTIONAL RANGE	AN/FRN-41(VOR)
INSTRUMENT LANDING SYSTEM	LOCALIZER, GLIDE SLOPE, AND MARKERS
INTERROGATOR SET	AN/TPX-41
DIGITAL BRIGHT RADAR INDICATOR TOWER EQUIPMENT	DBRITE

Figure F-2. ATC equipment requiring certification

TRAINING AND PROFICIENCY RECORD - AIR TRAFFIC CONTROLLER

For use of this form, see FM 1-303; the proponent agency is TRADOC.

GENERAL INFORMATION

This form consists of Sections I through VII. It will be used as an authoritative source of information and reference in regard to the individual's training record as air traffic controller in the United States Army and as a comprehensive training progress report. Required entries within this form will be recorded by the ATC/facility chief or the training NCO/supervisor.

SECTION I - PERSONAL IDENTIFYING DATA

NAME (last, first, middle initial)	ASGD INIT (Pencil)	RANK (Pencil)	CTO NUMBER	ATCS NO.	PMOS	DMOS (Pencil)

EXPIRATION DATE OF FLIGHT PHYSICAL (Pencil)	EXPIRATION TERM OF SERVICE (Pencil)

NAME AND LOCATION OF FACILITY TO WHICH ASSIGNED	DUTIES PERFORMED	DATE ASSIGNED		TYPE OF CERTIFICATES AWARDED; DATES AND REMARKS
		FROM	TO	

If additional space is needed, continue on reverse.

SECTION II - SCHOOLS ATTENDED

NAME OF SCHOOL	LOCATION	DATE COMPLETED

If additional space is needed, continue on reverse.

SECTION III - QUALIFICATION, PROFICIENCY, AND REMEDIAL TRAINING RECORD

SUBJECT	TYPE	DATE	HOURS	REMARKS

If additional space is needed, continue on reverse.

SECTION IV - WRITTEN/ORAL/PRACTICAL TEST ACTION

SUBJECT	DATE	SCORE	REMARKS

If additional space is needed, continue on reverse.

SECTION V - PROFICIENCY CHECKS

POSITION	DATE	SCORE	HOURS	INITIALS		REMARKS
				ATC	SUPV	

If additional space is needed, continue on reverse.

SECTION VI - MISCELLANEOUS GENERAL COMMENTS
1
2
3
4
5
6
7

SECTION VII
INDIVIDUAL RADAR RECORD

YEAR 19	PAR	ASR	EMERG NO GYRO	TOTAL	REMARKS
January					
February					
March					
April					
May					
June					
July					
August					
September					
October					
November					
December					
Total Runs for Year					
Total Runs Brought Forward					
Total Runs					

Facility Chief's Signature Date

TRAINEE/CONTROLLER EVALUATION

For use of this form, see FM 1-303; the proponent agency is TRADOC.

NAME	GRADE	ATCS NUMBER	EVALUATION NUMBER
TYPE OF TRAINING	POSITION EVALUATED		TRAINING MONTH

EVALUATION FACTOR	EXPECTED PERFORMANCE/REMARKS	SAT	NEEDS IMPROV	UNSAT
A. SEPARATION	1. Separation is ensured.			
B. CONTROL JUDGMENT	2. Awareness is maintained.			
	3. Good control judgment is applied.			
	4. Control actions are correctly planned.			
	5. Positive control of situations is provided.			
C. TRAFFIC MANAGEMENT	6. Prompt action to correct errors is taken.			
	7. Effective traffic flow is maintained.			
	8. Aircraft identity is maintained.			
	9. Professionalism is maintained.			
	10. Flight strip postings are correct and complete.			
D. OPERATING METHODS AND PROCEDURES	11. Clearance delivery is correct/complete/timely.			
	12. Letters of agreement/directives are adhered to.			
	13. Navigational assistance is provided.			
	14. Weather information is provided.			
	15. Handoff procedures are correctly performed.			
E. COORDINATION AND COMMUNICATION	16. Necessary traffic advisories are provided.			
	17. Coordination is thorough.			
	18. Communication is clear and concise.			
	19. Necessary transmissions are made.			
F. PHRASEOLOGY	20. Standard phraseology is adhered to.			
	21. Voice quality is good.			
	22. Speech rate is correct.			
G. EQUIPMENT	23. Equipment capabilities are fully understood/used.			
	24.			
	25.			
H. OTHER (Specify)	26.			
	27.			
	28.			
	29.			

TRAFFIC CONDITION (Check one block in each column.)			OVERALL RATING
	☐ Light	☐ Stable	
	☐ Moderate	☐ Fluctuating	
	☐ Heavy		

EVALUATOR COMMENTS	DATE
TYPED/PRINTED NAME AND GRADE	SIGNATURE

CONTROLLER/TRAINEE COMMENTS	DATE
THE UNDERSIGNED ☐ AGREES ☐ DISAGREES (If you disagree with the evaluation, refer to specific items of contention in your comments.)	
TYPED/PRINTED NAME AND GRADE	SIGNATURE

REVIEWING AUTHORITY COMMENTS	DATE
TYPED/PRINTED NAME, GRADE, AND TITLE	SIGNATURE

ATC FACILITY AND PERSONNEL STATUS REPORT

For use of this form, see FM 1-303; the proponent agency is TRADOC.

1. UNIT	2. FACILITY/BRANCH/DIVISION/ELEMENT/SECTION	3.DATE (MONTH/YEAR)

4. HOURS OF OPERATION

a. TOWER b. GCA c. ARAC

d. FOC e. FCC f. STAFF

5.	TOWER/NONRADAR APPROACH CONTROL							FOC/FCC/FLT FOL				ARAC/GCA						
SHIFT A (TO)	SS	LC	GC	FD	CD	AP		SS	FD	FF								
SHIFT B (TO)																		
SHIFT C (TO)																		
SAT AND SUN SHIFT D (TO)																		

6. TDA AUTHORIZATIONS (BY MOS)	7. TOE AUTHORIZATIONS (BY MOS)

8. AIRCRAFT ACTIVITY (BY SHIFT)

SHIFT	A	B	C	D
ARAC				
GCA				
TOWER				
FLIGHT FOLLOWING FOC/FCC				

9. REMARKS

DA FORM 3479-6-R, MAR 89 PREVIOUS EDITIONS ARE OBSOLETE

When this form is filled out, the information will be treated as official use only. Information contained in this form is covered by Systems Notice A1111.16a.

10. PERSONNEL

NAME	RANK	MOS	ETS	ATCS NO.	DATE ASSIGNED	DATE RATED	REMARKS:

DATE:	PREPARED BY: (NAME AND PHONE)	AUTHENTICATION OFFICER: (NAME, TITLE, OFFICE SYMBOL, AND PHONE)

11. MONTHLY TRAFFIC RECORD

YEAR_____MONTH _____ AAF/AHP (NAME)_____

			MILITARY	AIR CARRIER	GEN AVN
TOWER	IFR	LOCAL			
		TRANSIENT			
	VFR	LOCAL			
		TRANSIENT			
ARAC (NOT TO INCLUDE FINAL)	IFR				
	VFR				
GCA	RADAR VECTOR (PATTERN)				
GCA/ARAC	FINAL ASR				
	FINAL PAR				
FOC/FCC/FLIGHT FOLLOWING (TOTAL COUNT)					

TAPS

TACTICAL APPROACH PUBLICATIONS SYSTEM

For use of this form, see FM 1-303; the proponent agency is TRADOC.

1	AIRFIELD LOCATION	
2	AIRFIELD ELEVATION	
3	TOWER CALL SIGN/FREQUENCY	
4	NDB FREQUENCY/IDENTIFIER	
5	FINAL APPROACH COURSE	
6	DIRECTION OF TURNS	
7	HIGHEST OBSTACLE HEIGHT	
7A	DIRECTION FROM NDB	
7B	DISTANCE FROM NDB	
8	MMA	
9	MDA	
10	HAL/VIS	
11	LANDING AREA DIRECTION FROM NDB	
12	LANDING AREA DISTANCE FROM NDB	
13	GCA/CALL SIGN/FREQUENCY	
14	GLIDE PATH ANGLE	
15	FINAL APPROACH	
16	DECISION HEIGHT	
17	HAT/VIS	
18	AIRPORT LIGHTING	
19	MISSED APPROACH POINT	
20	MISSED APPROACH PROCEDURE	
21	AERODROME REMARKS	

APPROACH PROFILE

SIGNATURE	DATE

DA FORM 3479-8-R, NOV 87

ATC MAINTENANCE PERSONNEL CERTIFICATION AND RELATED TRAINING RECORD

For use of this form, see FM 1-303; the proponent agency is TRADOC.

1. NAME (last, first, MI)	2. SSN	3. GRADE/RANK

SECTION I. QUALIFICATION AND CERTIFICATION RECORD

4. SYSTEM/ SUBSYSTEM/ EQUIPMENT	5. THEORY			6. PERFORMANCE			7. CERTIFICATION	
	a. Qual Meth[1]	b. Date Qual	c. Init	a. Qual Meth[1]	b. Date Qual	c. Init	a. Date Acquired[2]	b. Date Revoked

SECTION II. CHANGE OF STATION ANNUAL REVIEW AND VALIDATION RECORD

8. DUTY STATION	9. DATE OF ACTION	10. TYPE OF ACTION	11. MAINT CHIEF'S SIGNATURE

DA FORM 3479-9-R, APR 93

SECTION III. RELATED TRAINING RECORD AND EXAMINATION RESULTS							
12. SYSTEM/ SUBSYSTEM/ EQUIPMENT	13. COURSE NUMBER	14. TRAINING OR EXAMINATION				15. REMARKS	16. INIT
		a.Type[3]	b.Number	c.Results[4]	d.Date Comp		

[1]Enter RTRN for resident training, PEXAM for performance examination, EXP for experience, CEXAM for concepts (theory) examination, PC for prior certification, and NTRN for nonresident training.

[2]If other than regular certification, enter I for interim.

[3]Enter C if action pertains to concepts (theory) or P if action pertains to performance.

[4]Enter P for passed or F for failed.

RESPONSIBILITY ASSIGNMENT

For use of this form, see FM 1-303; the proponent agency is TRADOC.

1. TYPE	2. DATE	3. PAGE NO.
☐ Initial Assignment ☐ Revision No._____ ☐ Revocation		

4. NAME (last, first, MI)	5. LOCATION

6. POSITION TITLE AND RANK/GRADE	7. IMMEDIATE SUPERVISOR	8. LOCATION/PHONE NO.

NOTE: As recorded on DA Form 3479-9-R, you have demonstrated proficiency on the equipment listed below. You are hereby assigned maintenance and certification responsibility for this equipment. The kinds and levels of responsibility delegated to you are shown by the code designations, which are explained on the reverse side of this form. If you have any questions concerning these assignments or, for example, hours of duty, watch schedules, or crew chiefs, contact your immediate supervisor.

9. SYSTEM/FACILITY/ EQUIPMENT		10. RESPONSIBILITY		11. EFFECTIVE DATES		12. COMMENTS (If none,so state.)
a. Type	b. Ident or Location	a. Maint	b. Cert	a. Start	b. End	

DA FORM 3479-10-R, APR 93

13. SPECIAL INSTRUCTIONS/RESTRICTIONS/LIMITATIONS/REMARKS

14. I understand the nature and extent of the responsibilities listed on this document.
NAME, TITLE, AND GRADE/RANK (typed) AND SIGNATURE OF TECHNICIAN

15. NAME AND TITLE (typed) AND SIGNATURE OF IMMEDIATE SUPERVISOR

16. NAME AND TITLE (typed) AND SIGNATURE OF FACILITY MAINTENANCE CHIEF/93D BN CERTIFIER

RESPONSIBILITY CODE DESIGNATIONS

MAINTENANCE

CBO	Callback only; not regular workload.
FIR	Facility inspection responsibility.
R-AST	Regular workload assistance as assigned by supervisor.
R-ASTCS	Regular workload and/or callback as assigned by supervisor.
RWA	Regular workload assignments.
RWCS	Regular workload and callback responsibility.
STAF	Duties as assigned by the facility maintenance chief such as analytical, diagnostic, evaluation, major modification, inspection, relief, training, and supervisory duties.

CERTIFICATION

FC	Full certification for complete system.
FIC	Full installation certification.
LC	Limited certification; subject to listed limitations.
SSC	Subsystem certification; limited to listed equipment.

17. COPY TO ☐ Technician ☐ Maintenance Supervisor ☐ Maintenance Chief

☐ OTHER (Specify) ☐ FILE

GCA OPERATIONS LOG For use of this form, see FM 1-303; the proponent agency is TRADOC.	1. FACILITY	2. FACILITY CHIEF (SIGNATURE)	3. DATE

FLIGHT PLAN A		AIRCRAFT		RADAR ID TIME	TYPE APRCH	OPERATIONS						RELEASE TIME	REMARKS
						ASR		PAR	MONITOR				
		IDENT	TYPE			PAT	FIN	FIN	ARR	DEP	SIMUL		
IFR	VFR	B	C	D	E	F	G	H	I	J	K	L	M
		ENTER TOTALS IN COLUMNS AT LEFT. (TOTAL NUMBER OF IFR OPERATIONS) (TOTAL NUMBER OF VFR OPERATIONS)		TOTAL IFR								/////	//////////
				TOTAL VFR								/////	//////////

DAILY REPORT OF AIR TRAFFIC CONTROL FACILITY

For use of this form, see FM 1-303; the proponent agency is TRADOC.

LOCATION	TYPE OF FACILITY	CHIEF'S SIGNATURE	DATE	PAGE NO.

TIME (UTC)	REMARKS

THE ENTRIES ABOVE ARE CORRECT; ALL SCHEDULED OPERATIONS HAVE BEEN ACCOMPLISHED, EXCEPT AS NOTED, AND ALL ABNORMAL OCCURRENCES AND CONDITIONS HAVE BEEN RECORDED.

SHIFT SUPERVISOR'S SIGNATURE	SHIFT SUPERVISOR'S SIGNATURE
SHIFT SUPERVISOR'S SIGNATURE	SHIFT SUPERVISOR'S SIGNATURE

AIR TRAFFIC CONTROL POSITION LOG

For use of this form, see FM 1-303; the proponent agency is TRADOC.

POSITION		DATE
INITIALS	TIME ON	TME OFF

DA FORM 3503-R, NOV 87 (Previous editions are obsolete)

AIR TRAFFIC CONTROL POSITION LOG

For use of this form, see FM 1-303; the proponent agency is TRADOC.

POSITION		DATE
INITIALS	TIME ON	TIME OFF

DA FORM 3503-R, NOV 87 (Previous editions are obsolete)

AIR TRAFFIC CONTROL POSITION LOG

For use of this form, see FM 1-303; the proponent agency is TRADOC.

POSITION		DATE
INITIALS	TIME ON	TIME OFF

DA FORM 3503-R, NOV 87 (Previous editions are obsolete)

AIR TRAFFIC CONTROL POSITION LOG

For use of this form, see FM 1-303; the proponent agency is TRADOC.

POSITION		DATE
INITIALS	TIME ON	TIME OFF

DA FORM 3503-R, NOV 87 (Previous editions are obsolete)

Glossary

Section I

ACRONYMS AND ABBREVIATIONS

A	adjacent (in formula)
AAC	Army approach control (nonradar)
AAF	Army airfield
AAS	airport advisory service
ABCCC	airborne battlefield command and control center
AC	arrival control
A^2C^2	Army airspace command and control
ACA	airspace control authority
ACC	airspace control center
ACM	airspace control measure
ACO	airspace control order
AD	air defense
ADIZ	air defense identification zone
adj	adjacent
AF	Air Force
AFCC	Air Force Component Commander
AFFS	Army flight-following service
AGC	automatic gain control
AGL	above ground level
AHP	Army heliport
AIG	address indicating group
AIM	Airman's Information Manual
AIT	advanced individual training
AMC	airspace management center
AME	airspace management element
AMLS	airspace management liaison section
ANSI	American National Standards Institute
AP	approach control
aprch	approach
AR	Army regulation
ARAC	Army radar approach control
ARNG	Army National Guard
ARR	arrival
ARTCC	air route traffic control center
ARTEP	Army training and evaluation program
ARTS	Automated Radar Terminal Systems
ASGD	assigned
ASI	additional skill identifier
ASR	airport surveillance radar

ASRT	air support radar team
ATA	airport traffic area
AT&A	air traffic and airspace
ATC	air traffic control
ATCA	Air Traffic Control Association
ATCRBS	Air Traffic Control Radar Beacon System
ATCS	air traffic control specialist
ATCT	airport traffic control tower
ATIS	automatic terminal information service
ATO	air tasking order
ATS	air traffic services
ATTN	attention
AVN	aviation
AWACS	Airborne Warning and Control System
AWS	air weather service
AWSR	air weather service report
bn	battalion
BTL	beacon tracking level
c	cargo; concepts
C^2	command and control
CA	conflict alert
CBO	callback only (responsibility code)
CD	clearance delivery
CDT	cumulative downtime
cert	certification
CEXAM	concepts (theory) examination
CG	commanding general
CI	coordinator
CIC	controller-in-charge
co	company
COMAFFOR	Commander, Air Force Forces
comp	completed
CONUS	continental United States
CRC	control and reporting center
CRP	control and reporting post
CTO	control tower operator
DA	Department of the Army
DAC	Department of the Army civilian
DARR	Department of the Army regional representative
dB	decibel
DBRITE	digital bright radar indicator tower equipment
DC	departure control
DDMMYY	day, month, year
DEP	departure
dir	director
DME	distance measuring equipment
DMOS	duty military occupational specialty

DOD	Department of Defense
DSN	defense switching network
DSO	data systems officer
DSS	data systems specialist
DTM	digital terrain map
DTS	date training starts
E	equipment; enlisted
EDA	estimated date of arrival
EDR	estimated date of return
emerg	emergency
emg	emergency
EML	emergency manning level
EOD	explosive ordnance disposal
ETA	estimated time of arrival
ETS	expiration term of service
EUSA	Eighth United States Army
EXP	experience
F	Fahrenheit; failed
FAA	Federal Aviation Administration
FAC	forward air controller
FACP	forward air control post
FAR	Federal Aviation Regulations
FC	full certification for complete system (responsibility code)
FCC	Federal Communication Commission/flight coordination center
FD	flight data
FF	flight following
FIC	full installation certification (responsibility code)
FIN	final
FIR	facility inspection responsibility (responsibility code)
FLIP	flight information publication
flt	flight
FM	field manual
FOC	flight operations center
fol	following
FS	full stop
FSCL	fire support coordination line
FSS	flight service station
ft	foot
FTM	facility training manual
FTP	facility training program
FTX	field training exercise
G3	Assistant Chief of Staff, GS (Operations and Plans)
GC	ground control

GCA	ground-controlled approach
gd	grounding
gen	general
GS	General Schedule
HAL	height above landing area
HAT	height above terrain
hdbk	handbook
HIDACZ	high density airspace control zone
HQ	headquarters
I	interim
ICAO	International Civil Aviation Organization/ International Civil Aeronautical Organization
ID	identification
ident	identification
IFF	identification, friend or foe (radar)
IFR	instrument flight rules
ILS	instrument landing system
IMC	instrument meteorological conditions
improv	improvement
init	initials
L	local
LA	low approach
LC	local control; limited certification (responsibility code)
LDA	localizer type directional aid
LO	liaison officer
LOA	letter of agreement
LOC	localizer
lv	leave
LWO	limited weather observation
LZ	landing zone
MA	missed approach
MACOM	major Army command
maint	maintenance
MARKS	Modern Army Record-Keeping System
MDA	minimum descent altitude
MED	medical
meth	method
MHz	megahertz
MI	middle initial
MIJI	meaconing, intrusion, jamming, interference
MMA	minimum maneuver area
MOA	military operations area
MOS	military occupational specialty
MRA	minimum reception altitude
MSA	minimum safe altitude

MSAW	minimum safe altitude warning
MSL	mean sea level
MVA	minimum vectoring altitude
N	north
NAS	National Airspace System
NAVAID	navigational aid
NCO	noncommissioned officer
NDB	nondirectional radio beacon
NM	nautical mile
no	number
NOE	nap of the earth
NOTAM	notice to airmen
NSN	national stock number
NTRN	nonresident training
NVG	night vision goggles
NVS	night vision systems
NWS	National Weather Service
0	opposite (in formula)
OCONUS	outside continental United States
OJT	on-the-job training
OPM	Office of Personnel Management
ops	operations
OTS	out of service
ov	observation vehicle
P	proficiency; performance; passed
PAM	pamphlet
PAR	precision approach radar
PAT	pattern
PC	prior certification
PCS	permanent change of station
PEXAM	performance examination
plt	platoon
PMCS	preventive maintenance checks and services
PMOS	primary military occupational specialty
POI	program of instruction
POL	petroleum, oil, and lubricants
PQ	position-qualified
PZ	pickup zone
Q	qualification
qual	qualification
R	remedial; record; reproducible
RAPCON	radar approach control facility, United States Air Force
R-AST	regular workload assistance as assigned by supervisor (responsibility code)

R-ASTCS	regular workload and/or callback as assigned by supervisor (responsibility code)
RATCF	radar air traffic control facility, United States Navy
RCO	remote communication outlet
RDP	radar data processing
reclas	reclassification
reg	regulation
req	request
rev	revision
RF	radio frequency
RPI	runway point of intercept
RPV	remotely piloted vehicle
RS	record-special
RT	radar tracking
RTRN	resident training
RTS	return to service
RVR	runway visual range
RWA	regular workload assignments (responsibility code)
RWCS	regular workload and callback responsibility (responsibility code)
S	special
SAR	search and rescue
SARSAT	search and rescue satellite
sat	satisfactory
Sat	Saturday
SAVES	safe aviation via exceptional service
SB	supply bulletin
SCATANA	security control of air traffic and air navigational aids
SD	special duty
SDF	simplified directional facility
SID	standard instrument departure
SIF	selective identification feature
sig	signal
simul	simulated
SOI	signal operation instructions
SOP	standing operating procedure
SPC	specialist
SS	shift supervisor
SSC	subsystem certification (responsibility code)
SSG	staff sergeant
SSN	social security number
STAF	duties as assigned by facility maintenance chief (responsibility code)
Sun	Sunday
supv	supervisor
SVFR	special visual flight rules

T	trainee; tangent (in formula)
TACAN	tactical air navigation
TACC	tactical air control center
TACP	tactical air control party
TACS	tactical air control system
TACT	tactical aviation control team
tan	tangent
TAPS	tactical approach publications system
TATC	tactical air traffic control
TB	technical bulletin
TC	training circular
TDA	table(s) of distribution and allowances
TDY	temporary duty
TDZE	touchdown zone elevation
TEMOD	test equipment modernization
TERPS	terminal instrument procedures
TG	touch-and-go
TM	technical manual
TMDE	test, measurement, and diagnostic equipment
tng	training
TOC	tactical operations center
TOE	table(s) of organization and equipment
TRACON	terminal radar approach control (FAA)
TRADOC	United States Army Training and Doctrine Command
TRI	tower radar indicator
T/SIP	tactical/standard instrument procedures
TTE	training time extended
TTR	training time resumed
TTS	training time stopped
TVO	tower visibility observation
TVOR	terminal VHF omnidirectional range station
TWR	tower
UH	utility helicopter
UHF	ultrahigh frequency
unk	unknown
unsat	unsatisfactory
US	United States (of America)
USAASD-E	United States Army Aeronautical Service Detachment Europe
USAATCA	United States Army Air Traffic Control Activity
USAAVNC	United States Army Aviation Center
USAF	United States Air Force
USAR	United States Army Reserve
USMC	United States Marine Corps
USN	United States Navy
UTC	Coordinated Universal Time
VFR	visual flight rules
VHF	very high frequency

VIP	very important person
vis	visibility
VMC	visual meteorological conditions
VOR	very high frequency omnidirectional range
VORTAC	collocated VOR and TACAN
VSWR	variable standing-wave ratio
VTOL	vertical takeoff/landing
WG	wage grade
WX	weather

Section II

DEFINITIONS

Airborne Battlefield Command and Control Center The ABCCC is an airborne command and control element manned by a battle staff commander; aircraft and weapons controllers; and operations, intelligence, and communications specialists. It provides the capability to control tactical air operations in forward battle areas that are sometimes beyond the range of ground-based TACS elements. Its primary function is to serve as a direct extension of the TACC current operations division. The ABCCC also can provide limited nonradar control of aircraft proceeding to and from designated target areas in the combat zone.

Airborne Warning and Control System The AWACS is an airborne radar platform that can provide all-altitude surveillance, warning, and aircraft control. AWACS operations will vary with the nature of the threat and the tactical missions being conducted. In locations where a ground TACS is present. AWACS will augment or extend the range of the control and reporting center. In the absence of ground TACS elements, the AWACS can operate autonomously to provide radar surveillance and airspace control in a combat zone as directed by the AFCC or COMAFFOR.

Air Carrier The air carriers are civil aircraft that are certified to operate and serve the public interest by transporting people and cargo for scheduled and unscheduled operations.

Airport Advisory Service The AAS is a service provided by some airfield operations that are not served by a control tower; for example, no tower, a tower not in operation, or a closed part-time tower. This service provides advice and information to arriving and departing aircraft. The information consists of wind direction and speed, favored runway, altimeter setting, pertinent known traffic, pertinent known field conditions, airfield and heliport taxi routes and traffic patterns, and

authorized instrument approach procedures. This is advisory information and does not constitute an ATC clearance.

Airport Surveillance Radar The ASR is the approach control radar that is used to detect and display an aircraft's position in the terminal area. It provides range and azimuth information but does not provide elevation data.

Airspace Control Airspace control is a service provided within the combat zone to maximize combat effectiveness by promoting safe, efficient, and flexible use of airspace. Airspace control permits flexibility of actions in controlled airspace. Authority to approve, disapprove, or deny combat operations is vested only in the joint force commander.

Airspace Control Area An airspace control area is the basic geographical element of an airspace control system. Airspace control within an airspace control area will normally be provided by the ACA as an integrated systems operation. The ACA plans and coordinates airspace operations using appropriate facilities of service component commanders who can effect airspace control. The ACA will have the necessary personnel, staff, and equipment for the required service. Representation from appropriate service components will be provided to the ACA.

Airspace Control Authority The ACA is a service component commander who is designated by the joint force commander to plan and coordinate airspace control matters. The ACA is also responsible for the operation of the airspace control system in the airspace control area. As used in this publication, the airspace control authority is the AFCC or the COMAFFOR.

Airspace Control Boundary The airspace control boundary is the lateral limits of an airspace control area, airspace control sector, airspace restriction, or high-density airspace control zone.

Airspace Control Center The ACC is an element within the TACC that includes component service liaison. It plans and establishes rules and procedures for the coordinated and integrated use of airspace by all component forces.

Airspace Control Facility The airspace control facility is any of the several service component facilities that provide airspace control in the combat zone. As used in this publication, airspace control facilities include the ACC, AMC, ATC facilities, AMEs, air defense command posts, and other elements of the TACS.

Airspace Control Order The ACO is a document that details all approved airspace requests. It will complement the ATO cycle and serve as the one planning document for airspace considerations.

Airspace Control Sector The airspace control sector is a subdivision of the airspace control area. The airspace control authority designates the sector considering service component airspace control capabilities and requirements.

Airspace Control System The airspace control system consists of the organization, personnel, facilities, policies, and procedures required to prevent collisions between aircraft, aircraft and obstructions to flight, and aircraft and surface-launched weapons. It contributes to combat effectiveness by promoting safe, efficient, and flexible use of airspace.

Airspace Management Airspace management is the coordination, integration, and regulation of the use of airspace of defined dimensions.

Airspace Management Center The AMC is an element within a control and reporting center that includes component service liaison. It is responsible for continuous coordination, regulation, and integration of component services' air operations according to the coordinated rules and procedures established by the ACC.

Airspace Management Element The AME is an element within the corps and division TOC operating under the staff supervision of the G3. It accomplishes airspace management functions among Army airspace users and with other services. The AME is a manual planning and management element that has limited information-handling capabilities. The manning of the AME should include an air defense officer, an aviation officer, and operations and clerical support personnel. The AME determines how the commander's airspace requirements can best be met. User activities and requirements differ between the division area and corps rear area. Consequently, AME functions also will differ. The AME coordinates the use of airspace, Army air defense artillery operations, and Army air traffic. It also provides information on aviation status, recommends the allocation and reallocation of Army aviation resources, and provides intelligence obtained through air defense channels.

Airspace Management Liaison Section The AMLS is an agency staffed with representatives from all involved service components. It is responsible to the ACA for planning, coordinating, and integrating activities related to airspace control.

Airspace Restricted Area An airspace restricted area is an airspace of defined dimensions designated by the ACA in response to specific operational situations and requirements. Within this airspace, the flight of aircraft is restricted according to certain specified conditions.

Airspace Restrictions Airspace restrictions are special restrictive measures applied to segments of airspace of defined dimensions.

Air Support Radar Team The ASRT is a mobile unit equipped with precision radar that provides all-weather guidance for tactical strike aircraft on attacks against ground targets. It also may be used to position reconnaissance and tactical airlift aircraft over predetermined coordinates.

Air Tasking Order The ATO is the document that implements tactical air support. It tasks assigned and attached units to accomplish specific missions to support the objectives of the joint force commander. The ATO is published daily by the Combat Plans Division of the TACC and provides sufficient detail to enable mission aircrews and TACS elements to execute assigned missions.

Air Taxi This term is used to describe helicopter or VTOL aircraft movement conducted above the surface. However, air taxi movement is not normally above 100 feet AGL. The aircraft may proceed either via hover taxi or flight at speeds of more than 20 knots. The pilot is solely responsible for selecting a safe airspeed and altitude for the operation being conducted.

Air Traffic Identification Air traffic identification is the use of electronic devices, operational procedures, visual observation, and flight plan correlation to identify and locate aircraft flying within the airspace control area.

Approach Clearance Approach clearance is the authorization by ATC for an aviator to conduct an instrument approach. When it is required, the type of instrument approach or other pertinent information is provided in the approach clearance.

Army Approach Control (Nonradar) The AAC is an air traffic control facility that is located at a US Army airfield or heliport. It provides approach control service without the use of radar.

Army Flight-Following Service The AFFS is a fixed-base facility that is normally employed in a noncombat support role. It provides flight-following and advisory services in the interest of flight safety.

Army Tactical Control Facilities The Army tactical control facilities are a network of FOCs, FCCs, approach and departure control facilities, control towers, and NAVAIDs. They are provided throughout an area of operations for the control and coordination of Army air traffic. The AMLS at the TACC and CRC arranges for the integration of Army ATC facilities with other service components' control facilities. Coordination of Army air traffic with other service components' air traffic and integration of Army air traffic into and out of division areas is normally accomplished by these facilities. Control functions vary from the facility's surveillance and "advisory-only" aspects of a monitoring service to one of positive air traffic separation provided under the concept of positive control. These facilities provide the required Army en route and terminal services; these services should not duplicate those that can be provided by the facilities of other service components *or* of the host country.

Automated Radar Terminal System II ARTS II is a programmable, nontracking, computer-aided display subsystem that is capable of modular expansion. ARTS II provides a level of automated ATC capability at terminals having low-to-medium activity. Flight identification and altitude may be associated with the display of secondary radar targets. Flight plan information may also be exchanged between the terminal and the ARTCC.

Automated Radar Terminal System III ARTS III is the BTL of the modular, programmable, automated radar terminal system in use at medium-to-high activity terminals. ARTS III detects, tracks, and predicts secondary radar-derived aircraft targets. These are displayed by computer-generated symbols and alphanumeric characters depicting flight identification, aircraft altitude, ground speed, and flight plan data. Although ARTS III does not track primary targets, the targets are displayed by symbols and alphanumeric characters coincident with the secondary radar. ARTS III can communicate with ARTCCs and other ARTS III facilities.

Automated Radar Terminal System IIIA ARTS IIIA, an enhancement of the ARTS III, is the RT and BTL of the modular, programmable, automated radar terminal system. ARTS IIIA detects, tracks, and predicts primary, as well as secondary, radar-derived aircraft targets. This more sophisticated computer-driven system will upgrade the existing US Army ARTS III system. ARTS III will provide improved tracking, continuous data recording, and fail-safe capabilities.

Certification Certification is the technical verification that the system/subsystem/equipment is providing the required or advertised services to the user (air traffic personnel or the

aviation community) subsequent to commissioning. The verification is followed by the prescribed written entry in the official facility maintenance log. Certification includes the independent determination as to when the system/subsystem/equipment should be either continued in or removed from service.

Certification Authority This authority consists of the appropriate documentation in the certification and training records of the satisfactory completion of the theory and performance requirements per the directive on the pertinent system/subsystem/equipment. The certification authority may be exercised only after the assignment, in writing, of specific responsibilities in the certification/training records.

Certification Personnel These personnel possess the necessary minimum knowledge and skills to determine the operational status of certain systems/subsystems/equipment.

Certification Record DA Form 3479-9-R is the certification and related training record.

Certification Responsibility This responsibility consists of the accountability for determining and documenting the operational status of specific systems/subsystems/equipment in the official facility maintenance log.

Certified Personnel These individuals are ATC maintenance personnel who are authorized to certify the operational status of certain systems/subsystems/equipment.

Civil Operations These operations are conducted by other than military aircraft.

Control and Reporting Center The CRC is an element of the TACS from which air defense, radar control, and warning operations are conducted within its area of responsibility. The CRC supervises the activities of subordinate units and collects, displays, evaluates, and disseminates information on the air activities throughout the TACS. The CRC provides defensive and offensive mission control, navigational and air rescue assistance, and threat warning for friendly aircraft. The CRC provides the means for air traffic regulation and identification coordination of air defense activities. It is the primary control agency in the airspace control area or sector.

Control and Reporting Post The CRP augments the CRC by extending radar surveillance and control capabilities. When the CRC is not operational or is directed otherwise, the CRP assumes the primary functions of a CRC, including the AMC and AMLS functions, within its capabilities. The CRP functions as an airspace control facility in an airspace control sector.

Controller A controller is a person authorized to provide ATC service.

Coordinating Altitude Coordinating altitude is an airspace management procedure used within airspace of defined dimensions. It is designed to reduce conflict between fixed-wing and rotary-wing aircraft.

Currency Currency signifies that a person has met all the requirements for performing the duties associated with a particular facility rating.

Day and Night Activity Day activity is defined as aircraft activity that is conducted between 0700 to 2200 local time. Night activity is defined as aircraft activity that is conducted between 0001 to 0700 and 2200 to 2400 local time. (This satisfies a requirement to obtain noise abatement data.)

Direct (One-on-One) Supervision Direct supervision is provided by a facility-rated, current controller who is assigned to a control position with an individual who is not position-qualified or current at that control position.

Examiners These individuals are ATC maintenance personnel who are designated, in writing, to monitor and conduct examinations.

Facility A facility is an ATC facility, its personnel, equipment, and structures that provide ATC services such as control tower, approach control (radar or nonradar), GCA, AFFS, FOC, or FCC.

Facility Rating A facility rating is an endorsement on a CTO or an ATCS certificate that signifies that the applicant has demonstrated the competence, qualifications, and skills required to control air traffic at a given location. A certificate, along with the rating, is issued to the applicant to confirm the rating and grant certain privileges. It may prescribe certain limitations according to the Federal Aviation Act, FAR, and Army regulations.

Final ASR A final ASR is an instrument or visual approach wherein the air traffic controller issues instructions to the pilot. The instructions are based on the aircraft position in relation to the final approach course (azimuth) and the distance (range) from the end of the runway as displayed on the controller's radar indicator.

Final PAR A final PAR is a PAR approach wherein the controller issues instructions to the pilot. Instructions are based on the aircraft position in relation to the final approach course

(azimuth), the glide slope (elevation), and the distance (range) from the touchdown point on the runway as displayed on the radar indicator. This count shall also be used to record radar-monitored, nonradar approaches such as ILS approaches.

Flight Coordination Center An FCC is an ATC facility that is used in the corps/division area to extend the radar coverage of the FOC. An FCC may also provide flight-following services and air warning advisories and assist in search and rescue operations.

Flight Operations Center The FOC is the corps-level ATC facility responsible for the control of en route air traffic within the designated airspace. The FOC may also provide flight-following services and air warning advisories and assist in search and rescue operations.

Foreign Aircraft Foreign aircraft are aircraft of other than US registry.

Forward Air Controller The FAC is a member of a TACP and may operate from airborne or ground positions. He controls close air support aircraft and integrates air strikes with the fire and maneuver of supported ground forces. The FAC maintains contact with the strike aircraft, other TACS elements, and the appropriate fire support coordinator or ground commander. His airspace functions include the coordination of air attacks with artillery and the appropriate aviation elements of the supported force in the target area.

Forward Air Control Post The FACP is a subordinate facility of the CRC or CRP. It consists of lightweight surveillance and control radar to extend system coverage, fill gaps, and provide a limited extension of the control capability. The FACP is the preferred ancillary control unit because of its mobility. The FACP functions as an airspace control facility in an airspace control sector.

GCA Radar Vector (Pattern) This radar service is for the purpose of observing or directing the flight path or route over which an aircraft transits. The air traffic controller issues instructions for pilot compliance based on the aircraft position, known traffic or obstructions, and ultimate aircraft destination. These instructions include radar separation, altitude assignments, navigational guidance, and vectors to the final approach course.

General Aviation This is the portion of civil aviation that includes all facets of aviation except air carriers.

General Supervision General supervision is provided by the shift supervisor or CIC to ensure the efficient operation of the facility during his tour of duty.

Ground-Controlled Approach The GCA is a radar approach system operated from the ground by ATC personnel transmitting radio instructions to a pilot. The approach may be conducted with ASR only or with both surveillance and PAR. The use of the term "GCA" by pilots is discouraged except when they are referring to a GCA facility. Pilots should specifically request either a PAR approach when they desire a precision radar approach or an ASR or a surveillance approach when they desire a nonprecision radar approach.

High Density Airspace Control Zone An HIDACZ is airspace of defined dimensions (designated by the ACA) in which there is a concentrated employment of numerous and varied weapons. An HIDACZ may be established when the level and intensity of operations involving the use of airspace dictate the need for special airspace control measures to prevent or minimize interference between airspace users. When appropriate, airspace involving the concentrated employment of numerous and varied weapons will be designated an HIDACZ of defined dimensions wherein special airspace control measures for high density airspace use are to be implemented. The number of such zones may vary depending on the combat situation and the complexities of ATC in conjunction with fire support coordination.

Instrumented Airfield An instrumented airfield is equipped with electronic/visual NAVAIDs that can provide the aviator with a precision/nonprecision approach procedure that will terminate preferably with a straight-in landing.

Instrument Flight Rules Instrument flight rules govern the procedures for conducting instrument flight. The term “IFR” is also used by aviators and controllers to indicate the type of flight plan filed.

Instrument Meteorological Conditions IMC are meteorological conditions expressed in terms of visibility, the distance from clouds, and the ceiling. They are less than the minima specified for visual meteorological conditions.

Interim Certification This certification authority is granted to cover new systems/subsystems/equipment pending establishment of a mandatory certification date or conversion to regular certification. The certifier may nominate for interim certification those individuals who have successfully completed resident, nonresident, or on-the-job training and are considered by the immediate

supervisor competent to certify the equipment. Interim certification may be granted if the technician has completed the theory examination but, because of the nonavailability of equipment, has not completed the performance examination. Their names will be forwarded for validation to Commander, USAAVNC, ATTN: ATZQ-ATC-MO, Fort Rucker, AL 36362-5265. Interim certification will not exceed 3 months and may not be granted to the same individual more that twice on the same system/subsystem/equipment within the same 12-month period. Interim certification will be converted to regular certification when theory and performance examinations have been completed.

Joint Facility A joint facility is an ATC facility wherein the division of operational responsibility is clearly defined between the Army and another agency.

Joint Force Commander The joint force commander provides the general priorities to be applied in airspace use with due regard for the requirements of all users. He assigns overall responsibility for airspace control over the combat zone to a service component commander who is designated as the ACA. Normally, this will be the Air Force component commander. In certain circumstances, such factors as combat air assists, primary mission, and requisite airspace control capabilities may require that another service component commander be designated the ACA.

Mandatory Certification Date This is the date that a technician must obtain specific system/subsystem/equipment certification. This determination is set forth in the guidance of the Facility Maintenance Training Program, which is developed and coordinated with the USAAVNC with Aviation Branch approval. A waiver may be granted by USAATCA, Fort Rucker, Alabama, when there are unusual circumstances.

Military Aircraft Military aircraft are rotary-wing and fixed-wing airframes under the jurisdiction of the US military, foreign military, or US Coast Guard.

Minimum Risk Routes These are temporary routes of flight that are recommended for Air Force use. Minimum risk routes present the minimum known hazards to low-flying aircraft transiting the tactical operations area.

No-Gyro Approach/Vector A no-gyro approach/vector is a radar approach/vector provided in the event that the gyrocompass or directional gyro malfunctions. Instead of providing the pilot with headings to be flown, the controller observes the radar track and issues the control instructions “turn right/left” or “stop turn,“ as appropriate.

Nonprecision Approach Procedures A nonprecision approach procedure is a standard instrument approach procedure in which no electronic glide slope is provided: for example, VOR, NDB, ASR, LOC, LDA, or SDF approaches.

Overflights Overflights are aircraft that receive Army ATC services while overflying or transiting that facility's area of responsibility.

Performance Examination An examination designed to test the ATC maintenance technician's proficiency by means of a practical hands-on demonstration on the particular system/subsystem/equipment.

Position Qualification Position qualification attests that an individual has mastered the knowledge and skills required to operate independently at a specific ATC operating position. It is one step in the process of obtaining a facility rating.

Positive Control Positive control is the operation of air traffic in a radar/nonradar control environment in which positive identification, tracking, and direction of aircraft within an airspace are conducted by an agency having the authority and responsibility therein.

Precision Approach Radar Approach A PAR approach is a precision instrument approach wherein the air traffic controller issues guidance for aviator compliance. The instruction is based on the aircraft's position in relation to the final approach course (azimuth), the glide slope (elevation), and the distance (range) from the touchdown point on the runway as displayed on the controller's radar scope.

Procedural Control Procedural control is a type of airspace control that is accomplished by nonelectronic means.

Qualified Controller A qualified controller is a facility-rated controller or one who is position-qualified on one or more controller positions.

Radar Approach A radar approach is an instrument approach procedure that uses PAR or ASR.

Radar Approach Control Facility A RAPCON is a terminal ATC facility that uses radar and nonradar capabilities to provide approach control services to aircraft that are arriving, departing, or transiting airspace controlled by the facility; for example, VFR and IFR aircraft and, on occasion, en route aircraft. A RAPCON provides radar ATC services to aircraft operating in the vicinity of one or more civil/military airports

in a terminal area. The facility may provide the services of a GCA such as ASR and PAR approaches. A radar approach control facility may be operated by the FAA, USAF, US Army, USN, or USMC or jointly by a military service and the FAA. Specific facility nomenclatures are used for administrative purposes only. They are related to the physical location of the facility and the operating service as follows: ARAC (Army), RATCF (Navy/FAA), RAPCON (AF/FAA), TRACON (FAA), and only those ATCTs (FAA) delegated approach control authority.

Rear Operations Area The rear operations area is that area behind the tactical operations rear boundary where airspace control is more definitive. Dimensions are as directed by the joint force commander.

Special Visual Flight Rule Operations SVFR operations are conducted by those aircraft that are operating according to clearances within control zones in weather conditions that are less than the basic VFR weather minima. Such operations must be requested by the aviator and approved by ATC.

Standby Equipment Standby equipment is standby/dual-channel radar, NAVAID, or ATC communications equipment that can provide the identical service of the primary equipment. This equipment must be spot-checked to ensure that it is functioning in a manner equal to the primary equipment (TM 95-225).

Tactical Air Control Center The TACC is the control center of the TACS. The TACC is dedicated to and operationally responsive to the AFCC/COMAFFOR for airspace control, ground target-sensor surveillance, air support coordination and control, and air strike coordination and control. Through the TACC, the AFCC/COMAFFOR permits decentralized execution of air missions by subordinate TACS elements to promote mission effectiveness and enhance responsiveness.

Tactical Air Control Party The TACP requests, coordinates, and controls tactical air support for ground forces. It also advises and assists ground commanders and meets other related tactical air support special requirements of individual ground force echelons. TACPs above brigade do not normally perform the FAC function.

Tactical Operations Area The tactical operations area is that area between the FSCL and the rear operations area where maximum flexibility in the use of airspace is needed to assure mission accomplishment. The rear boundary of the tactical operations area should normally be at or near the rear boundary of the frontline divisions.

Temporary Airspace Restrictions Temporary airspace restrictions may be imposed on segments of airspace of defined dimensions in response to specific situations and requirements. Examples of these are SAR; air refueling areas; artillery, mortar, and naval gunfire support; concentrated interdiction areas; and areas that the Army air defense commander has declared weapons-free.

Theory of Operation Examination The theory of operation examination is the written examination used to verify a knowledge level equivalent to that of a graduate of resident training or required to assume full maintenance responsibility for the system/subsystem/equipment. Successful completion of the examination indicates the examination has met the theory requirements of the corresponding equipment.

VFR Operations VFR operations are conducted according to visual flight rules.

Visual Flight Rules VFRs govern the procedures for conducting flight under visual conditions. The term VFR is also used in the United States to indicate weather conditions that are equal to or greater than minimum VFR requirements. It is also a term used by pilots and controllers to indicate the type of flight plan.

Visual Meteorological Conditions These are meteorological conditions that are expressed in terms of visibility, cloud distance, and ceiling. VMC are equal to or better than the specified minima.

REFERENCES

SOURCES USED

These are the sources quoted or paraphrased in this publication.

Air Weather Service Regulation

AWSR 50-10. Surface Observing for Nonweather Personnel.

NOTE: AWS regulations can be viewed at the local installation weather station.

American National Standards Institute Regulation

ANSI Reg A14.3. Safety Requirements for Fixed Ladders.

NOTE: ANSI regulations can be obtained from the American National Standards Institute, Inc., 1430 Broadway, New York, NY 10018.

Army Regulations

AR 25-50. Preparing and Managing Correspondence. 21 November 1988.
AR 25-55. The Department of the Army Freedom of Information Act Program. 10 January 1990.
AR 25-400-2. The Modern Army Recordkeeping System (MARKS). 15 October 1986.
AR 40-8. Temporary Flying Restrictions Due to Exogenous Factors. 17 August 1976.
AR 40-501. Standards of Medical Fitness. 1 July 1987.
AR 70-37. Configuration Management. 1 July 1974.
AR 95-1. Army Aviation: Flight Regulations. 30 May 1990.
AR 95-2. Air Traffic Control, Airspace, Airfields, Flight Activities, and Navigational Aids. 10 August 1990.
AR 95-3. Aviation: General Provisions, Training, Standardization, and Resource Management. 27 September 1990.
AR 95-1. The US Military Notice to Airmen (NOTAM) System. 17 November 1990.
AR 95-21. Security Control of Air Traffic and Air Navigation Aids (SCATANA). 25 June 1976.
AR 385-10. Army Safety Program. 23 May 1988.

Army Regulations (continued)

AR 385-30. Safety Color Code Markings and Signs. 15 September 1983.
AR 385-95. Army Aviation Accident Prevention. 20 May 1991.
AR 420-90. Fire Prevention. 1 February 1985.
AR 700-138. Army Logistics Readiness and Sustainability. 30 March 1990.
AR 725-50. Requisitioning, Receipt, and Issue System. 1 October 1987.
AR 750-1. Army Materiel Maintenance Policy and Retail Maintenance Operations. 27 September 1991.
AR 750-43. Army Test, Measurement, and Diagnostic Equipment Program. 29 September 1989.

Army Training and Evaluation Program Publication

ARTEP l-227-10-Drill. Battle Drills for Air Traffic Control Teams. 23 May 1989.

Department of the Army Pamphlets

DA Pam 25-30. Consolidated Index of Army Publications and Blank Forms (microfiche). 1 October 1992.
DA Pam 738-750. Functional Users Manual for The Army Maintenance Management System (TAMMS). 27 September 1991.
DA Pam 750-10. US Army Equipment Index of Modification Work Orders. 1 August 1989.

Department of Defense Flight Information Publications

Flight Information Handbook
Flight Information Bulletin
Low Altitude Instrument Approach Procedures
Charts
IFR Supplement
VFR Supplement

NOTE: DOD flight information publications can be obtained from the unit FLIP manager.

Federal Aviation Administration Bulletin

Air Traffic Services (ATT-550) Site Program Bulletin (Terminal).

Federal Aviation Administration Forms

FAA Form 7220-1. Air Traffic Control Specialist Certificate.
FAA Form 7230-7. Flight Progress Strip.
FAA Form 7230-7.1. Flight Progress Strip.
FAA Form 7230-7.2. Flight Progress Strip.
FAA Form 7230-8. Flight Progress Strip.
FAA Form 7230-21. Flight Progress Strip.
FAA Form 7460-2. Notice of Actual Construction or Alteration.
FAA Form 7610-1. Aeronautical Facility - SCATANA Actions.
FAA Form 7610-3. SCATANA Test Report Card.

Federal Aviation Administration Handbooks/Orders

FAA Hdbk 7110.10. Flight Services.
FAA Hdbk 7110.65. Air Traffic Control.
FAA Hdbk 7210.3. Facility Operation and Administration.
FAA Order 7220.1. Certification and Rating Procedures.
FAA Hdbk 7340.1. Contractions.
FAA Hdbk 7350.5. Location Identifiers (CONUS only).
FAA Hdbk 7400.2. Procedures for Handling Airspace Matters.
FAA Hdbk 7610.4. Special Military Operations.
FAA Order 8080.1. Conduct of Airman Written Test.
FAA Order 8240.9. VOR/VORTAC Improvement Program.

NOTE 1: FAA bulletins, forms, handbooks, and orders can be obtained through the unit FLIP manager.

NOTE 2: FAA publications and forms that cannot be obtained using the ordering procedures in the DMA/DOD planning catalog may be requested from the Director, US Army Aeronautical Services Agency, ATTN: MOAS-AI, Cameron Station, Alexandria, VA 22304-5050.

Federal Aviation Regulations

FAR, Part 65. Certification: Airmen Other Than Crewmembers.
FAR, Part 105. Parachute Jumping.

NOTE: The FAR can be obtained through the unit FLIP manager.

Federal Meteorological Form/Handbook

FMF1-1OC. Federal Meteorological Form.
FMH-9. Aviation Weather Observations.

NOTE: The meteorological form and handbook may be obtained from the US Army Aeronautical Services Agency (address above).

Field Manuals

FM 1-100. Doctrinal Principles for Army Aviation in Combat Operations. 28 February 1989.
FM 1-103. Airspace Management and Army Air Traffic in a Combat Zone. 30 December 1981.
FM 1-300. Flight Operations and Airfield Management. 31 October 1986.
FM 10-14. Unit Supply Operations (Manual Procedures). 27 December 1988.
FM 11-486-23. Telecommunications Engineering for Air Traffic Control Facilities and Systems. 15 October 1979.
FM 11-487-4. Installation Practices: Communications Systems Grounding, Bonding, and Shielding. 28 December 1987.
FM 11-490-9. Communications-Electronics Facilities, Grounding, Bonding, and Shielding. 20 December 1977.
FM 20-31. Electric Power Generation in the Field. 9 October 1987.
FM 21-11. First Aid for Soldiers. 27 October 1988.
FM 24-2. Spectrum Management. 21 August 1991.
FM 43-5. Unit Maintenance Operations. 28 September 1988.
FM 43-11. Direct Support Maintenance Operations (Nondivisional). 5 September 1991.
FM 57-230. Advanced Parachuting Techniques and Training. 30 September 1980.
FM 90-25. Airlift for Combat Operations (ALCO). 17 September 1990.
FM 100-28. Doctrine and Procedures for Airspace Control in the Combat Zone. 1 December 1975.
FM 100-42. US Air Force/US Army Airspace Management in an Area of Operations. 1 November 1976.
FM 100-103. Army Airspace Command and Control in a Combat Zone. 7 October 1987.

ICAO Manual

ICAO Manual 7910. Location Identifiers (OCONUS only). (DATE?)

NOTE: ICAO manuals can be obtained from the unit FLIP manager.

Joint Publication

Joint Pub 3-52 (Test). Doctrine for Joint Airspace Control in the Combat Zone. 15 August 1991.

National Fire Safety Code

NFSC 101. Life Safety Code.

NOTE: This safety code can be obtained from the National Fire Prevention Association, Inc., Quincy, MA 02269.

National Flight Data Digest

National Flight Data Digest.

NOTE: This publication can be obtained from the Director, US Army Aeronautical Services Agency, ATTN: MOAS-AI, Cameron Station, Alexandria, VA 22304-5050.

Supply Bulletin

SB 11-573. Painting and Preserving of Supplies Available for Field Use for Electronics Command Equipment. 8 February 1969.

Technical Bulletins

TB 11-6625-3263-25. TEMOD Program Guide and Replacement Lists. 1 January 1991.

TB 43-0001-61-1. Equipment Improvement Report and Maintenance Digest: Test, Measurement, and Diagnostic Equipment (TMDE). 1 April 1992.

TB 43-0118. Field Instructions for Painting and Preserving Communications-Electronics Equipment. 15 June 1986.

TB 43-0129. Safety Measures to be Observed When Installing and Using Whip Antennas, Field-Type Masts, Towers, Antennas, and Metal Poles That Are Used With Communication, Radar, and Direction-Finder Equipment. 15 June 1986.

TB 43-0133. Hazard Criteria for CECOM Radio Frequency and Optical Radiation-Producing Equipment. 1 April 1991.

TB 43-0180. Calibration and Repair Requirements for the Maintenance of Army Materiel. 16 September 1991.

TB 43-0181. Tables of Organization and Equipment (TOE) and Sets, Kits, and Outfits (microfiche). 1 June 1983.

TB 95-1. US Army Air Traffic Control and NAVAID Facility Standards. 15 September 1979.

TB 385-4. Safety Requirements for Maintenance of Electrical and Electronic Equipment. 1 August 1992.

TB 750-25. Maintenance of Supplies and Equipment: Army Test, Measurement, and Diagnostic Equipment (TMDE) Calibration and Repair Support Program. 9 November 1984.

Technical Bulletins (continued)

TB MED 523. Control of Hazards to Health From Microwave and Radio Frequency Radiation and Ultrasound. 15 July 1980.
TB SIG 222. Solder and Soldering. 5 March 1985.
TB SIG 252. Use of Electrical Insulation Tapes TL-600/U and TL-636/U. 9 July 1954.

Technical Manuals

TM 5-811-3. Electrical Design: Lightning and Static Electricity Protection. 29 March 1985.
TM 5-811-5. Army Aviation Lighting. 13 December 1991.
TM 5-823-4. Marking of Army Airfield-Heliport Operational and Maintenance Facilities. 7 July 1987.
TM 9-6140-200-14. Operator's, Unit, Intermediate Direct Support, and Intermediate General Support Maintenance Manual for Lead-Acid Storage Batteries. 13 July 1989.
TM 43-0139. Painting Instructions for Army Materiel. 27 July 1988.
TM 95-225. United States Standard: Flight Inspection. 1 May 1963.
TM 95-226. United States Standard for Terminal Instrument Procedures (TERPS). 1 July 1976.

NOTE: TMs 95-225 and 95-226 are available from S&I Director, USAATCA, ATTN: CCQ-AS-AI, Cameron Station, Alexandria, VA 22134.

DOCUMENTS NEEDED

These documents must be available to the intended users of this publication.

Civilian Personnel Publications

OPM Hdbk X-118. Qualification Standards for Positions Under the General Schedule (Basic Including C1-212). May 1986.

NOTE: This handbook can be reviewed at the installation Office of Civilian Personnel.

Department of the Army Forms

DA Form 2028. Recommended Changes to Publications and Blank Forms. February 1974.
DA Form 2404. Equipment Inspection and Maintenance Worksheet. April 1979.

Department of the Army Forms (continued)

DA Form 2696-R. Operational Hazard Report. March 1983.
DA Form 3479-R. Training and Proficiency Record - Air Traffic Controller. March 1989.
DA Form 3479-l-R. Trainee/Controller Evaluation. April 1993.
DA Form 3479-6-R. ATC Facility and Personnel Status Report. March 1989.
DA Form 3479-8-R. Tactical Approach Publications System. November 1987.
DA Form 3479-9-R. ATC Personnel Certification and Related Training Record. April 1993.
DA Form 3479-10-R. Responsibility Assignment. April 1993.
DA Form 3501-R. GCA Operations Log. June 1978.
DA Form 3502-R. Daily Report of Air Traffic Control Facility. April 1993.
DA Form 3503-R. Air Traffic Control Position Log. November 1987.
DA Form 4186. Medical Recommendation for Flying Duty. January 1985.

INDEX

This index is organized alphabetically by topics and subtopics. Topics and subtopics are identified by page numbers

A^2C^2 liaison, 8-3
Accident
  information release, 2-19
  involving radar facilities, 2-19
Administration and management training, 7-3
Administration, facility, 2-1
Administrative correspondence, 4-4
Advisories, 2-15
Aeronautical Facility - SCATANA Actions and SCATANA Test Report Card. See FAA Form 7610-1 and FAA Form 7610-3.
Airborne battlefield command and control center, Glossary-8
Airborne Warning and Control System, Glossary-8
Air carrier, Glossary-8
Aircraft accidents, 2-17
Airfield
  advisory service, Glossary-8
  diagram, 4-3. See also Charts and Maps.
  weather status, 2-17
Airport
  advisory service, 2-13
  surveillance radar, 5-6, Glossary-9
Airspace control, Glossary-9
  area, Glossary-9
  authority, Glossary-9
  boundary, Glossary-9
  center, Glossary-9
  facility, Glossary-9
  order, Glossary-10
  sector, Glossary-10
  system, Glossary-10
Airspace management, 2-14, Glossary-10
  center, Glossary-10
  element, Glossary-10
  liaison section, Glossary-10
Airspace restricted area, Glossary-11
Airspace restrictions, Glossary-11
Air support radar team, Glossary-11
Air tasking order, Glossary-11
Air taxi, Glossary-11
Air Traffic Controller Individual Training Records Folder, 7-7, 7-8

Air Traffic Control Maintenance Certification and Related Training Records Folder, F-13
Air Traffic Control Position Log. See DA Form 3503-R.
Air traffic identification, Glossary-11
Altimeters, 3-16, 3-17
Approach clearance, Glossary-11
Army approach control (nonradar), Glossary-11
Army flight-following service, Glossary-11
Army tactical control facilities, Glossary-12
ATC Awards Program, C-1 through C-8
  ATC awards, C-1 through C-6
  ATCA awards, C-8
  SAVES awards, C-7, C-8
ATC-certified, 1-3
ATC Facility and Personnel Status Report. See DA Form 3479-6-R.
ATC Maintenance Certification Program, F-1 through F-19
ATC Personnel Certification and Related Training Record. See DA Form 3479-9-R.
ATCS certificate, 4-16
ATIS. See Automatic terminal information service.
Automated Radar Terminal System, Glossary-12
Automatic
  acquisition and termination areas, 5-3, 5-4
  terminal information service, 3-3
Automation program changes, 5-3
Awards, 1-2, C-1 through C-8

Battle drills, 8-6

Certificate, ATCS, 4-16
Certification, 1-1, 2-15, Glossary-12
  authority, F-1 through F-3, Glossary-13
  initial facility, 3-3
  of copies of written records, 3-14
  of tapes, 3-11
  of transcriptions, 3-11
  personnel, Glossary, 13
  process, F-7
  record, Glossary-13
  responsibility, F-1 through F-3, Glossary-13
Certified personnel, Glossary-13
Certifiers, F-1, F-2
Charts, 8-8
  ATC facility, 4-3
  control tower, 4-3
  flight-following facility, 4-4
  radar facility, 4-3
  visibility
    checkpoint, 2-17
    visibility markers, 4-3

Checks, equipment, 3-1
Civil operations, Glossary-13
Classification, facility, 1-2, 7-1
Clocks, 3-4
Communications, 2-13, 2-14, 2-19
  facilities, E-6 through E-8
  telephone lines, 3-6
Contests and appeals, 7-8, F-18
Control and reporting
  center, Glossary-13
  post, Glossary-13
Controller, Glossary-14
Control position responsibilities, 2-5, 2-6
Control positions, 2-5, 2-6
  airport surveillance radar, 2-6
  approach control, 2-6
  arrival control, 2-6
  clearance delivery, 2-6
  coordinator, 2-6
  departure control, 2-6
  flight data, 2-6
  flight following, 2-6
  ground control, 2-6
  local control, 2-5
  precision approach radar, 2-6
  shift supervisor, 2-5
Control tower, 4-3
  charts, 4-3
  diagrams, 4-3
  terminal, 8-3
Cooperative weather watch, 2-14, 2-15
Coordinated Universal Time, 2-8
Coordinating altitude, Glossary-14
Counterdrug operations, 2-14
Crash alarm system, 3-4
Currency, Glossary-14
  facility, 2-7

DA Form
  2404, 3-1
  2696-R, 4-10, 4-20
  3479-R, 2-15, 3-2, 4-19, 7-5 through 7-8
  3479-1-R, 1-3, 4-19, 7-2, 7-3, 7-7, 7-9 through 7-12, 8-6
  3479-6-R, 2-7, 4-13 through 4-19
  3479-8-R, 8-9, 8-10
  3479-9-R, F-13, F-14 through F-16, F-18
  3479-10-R, F-13, F-16 through F-18
  3501-R, 4-10, 4-11
  3502-R, 2-4, 2-11, 2-16, 2-17, 2-18, 2-20, 3-1, 3-4, 3-6, 3-10, 4-11 through 4-13, 4-20, 8-7

3503-R, 4-13
4186, 7-7, 7-8
Daily radar performance checks, 5-1, 5-2
Daily Report of Air Traffic Control Facility. See DA Form 3502-R.
Day and night activity, Glossary-14
DBRITE, 3-4 through 3-6
Density altitude advisory broadcast, 2-16
Deployment, 8-7
Diagrams, 4-1, 4-3
Digital
bright radar indicator tower equipment. See DBRITE.
terrain maps, 5-9, 5-10
Direct supervision, Glossary-14
Display indicators, 5-2
Duty
performance, non-ATC, 2-7
releases, 2-11, 2-12

Egress systems, 3-17
Emergency
manning levels, 2-11, 2-12
requirements, 2-14
warning and evaculation system, 3-4
Employment, 8-7
Equipment
certification, F-18, F-19
checklist, 4-20
checks, 8-7
maintenance, 3-2
requiring certification, F-19
training, 8-6
Evaluations, 7-3, 7-9
Examination
failure policy, F-11, F-12
performance, F-8, F-10, Glossary-18
review and evaluation, F-11
theory of operations, F-8, F-9, Glossary-20
Examiner, 2-4, 8-5, Glossary-14
designations, 2-4
prerequisites, F-6

FAA Flight Inspection Course, 8-5
FAA Form
7230-7, 4-11
7230-21, 6-5, 6-6
7460-2, 5-9
7610-1, 4-19
7610-3, 4-19

Facility, Glossary-14
  certification, 3-3
  maintenance certification, 3-2, F-1
  operations, 1-1
  rating, Glossary-14
  training manual, 7-4
  training manual outlines, A-1 through A-26
    fixed-base, A-1
    tactical, A-22
  Training Program, 2-1, 7-1 through 7-12
  training schedule, 7-4, 7-5
Facility-rated, 1-1, 1-3, 2-4, 2-9, 2-10, 7-3
Facility rating examination, 7-3
Final
  ASR, Glossary-14
  PAR, Glossary-14
Flight
  check, 8-5
  coordination center, 8-3, Glossary-15
  following, 6-1 through 6-6
  operations center, 8-2, Glossary-15
  procedures, 6-3, 6-4
  records, 6-5, 6-6
  responsibilities, 6-1 through 6-3
Flight Progress Strip, 4-19, 6-5, 6-6
Flight strip holder, 6-5
Foreign aircraft, Glossary-15
Forward
  air controller, Glossary-15
  air control post, Glossary-15

GCA Operations Log, 4-10
GCA radar vector (pattern), Glossary-15
General
  aviation, Glossary-15
  supervision, Glossary-16
Ground-controlled approach, 8-3, Glossary-16
Ground inspection, 3-2, E-1 through E-9

HIDACZ, Glossary-16
High Density Airspace Control Zone. See HIDACZ.
Hours of operation, 2-8, 2-9, 2-12
Hours of duty, 2-8, 2-9
  fixed facilities, 2-8
  maintenance personnel, 2-13
  tactical facilities, 2-9

ILS flight inspections, E-3
Information release, 2-19
Inspections, ground, E-1 through E-9

Instrumented airfield, Glossary-16
Instrument
  flight rules, Glossary-16
  meteorological conditions, Glossary-16
Interim certification, Glossary-16
Intersection-takeoff diagram, 4-3

Joint facility, Glossary-17
Joint force commander, Glossary-17

Letter of agreement, 2-8, 2-14, 2-15, 3-5, 4-2, 4-4 through 4-7, 8-1, 8-5
Light guns, 3-4

Magnetic variations, 5-9
Maintenance
  certification program, 1-2
  chief, 2-5
  facility, 3-2
  personnel, 2-13
  technician certification, 3-2, F-1, F-4 through F-6
Mandatory certification date, Glossary-17
Maps, 4-1, 4-3, 8-8
Marker beacon flight inspections, E-5
Medical
  considerations, 2-7
  evaluation, 2-18
  restrictions, 2-7
Military aircraft, Glossary-17
Minimum
  risk route, Glossary-17
  safe altitude warning and conflict alert, 5-9
  vectoring altitude charts, 5-6 through 5-8
Monthly Traffic Record, 4-17 through 4-19
Memorandums, 4-2, 4-10
NAVAID. See Navigational aids.
Navigational aid, 3-14, 3-15, 8-4
NDB flight inspections, E-5
Night vision goggles, 3-17 through 3-19
No-gyro approach/vector, Glossary-17
Nonprecision approach procedures, Glossary-18
Notices to airmen, 2-19

Operating
  initials, 2-7
  positions, newly established, 3-9
Operational checks of the radar system, E-6
Operational Hazard Report. See DA Form 2696-R.
Operations letter, 2-8, 4-2, 4-7 through 4-9
Outlines, facility training manual, 1-2, A-1 through A-26
Overflights, Glossary-18

PAR approach, Glossary-18
Performance examination, F-8, F-10, Glossary-18
Personnel, noncontroller, 2-7
Physical standards, 1-1, 2-1
Position
  assignments, 2-10
  consolidation, 2-10
  qualification, 7-2, Glossary-18
  recording channels, 3-8
  responsibility transfer, 2-10, 2-11
Position-qualified, 1-3, 2-9, 2-10, 7-1
Positive control, Glossary-18
Procedural control, Glossary-18
Program of instruction, 7-1
Publication reference files requirements, B-1 through B-14
  A^2C^2 elements, B-11
  Army flight-following service fixed-base facilities, B-6, B-7
  company and platoon headquarters, B-9, B-10
  fixed-base stagefields, B-1 through B-3
  maintenance fixed-base facilities and tactical sections, B-11
  radar facilities, B-4, B-5
  tactical ATC facilities, B-8, B-9
  VFR/IFR towers, B-1

Qualified controller, Glossary-18
Quality assurance, 1-1

Radar
  approach, Glossary-18
  beacons, 5-10
  control facility, Glossary-18
  facilities, 5-1
  facility flight inspections, E-5, E-6
  mapping, 5-4
Radio equipment, 3-7
Rating standards, 1-1
Rear operations area, Glossary-19
Recertification, 3-3
Recordings, 3-8 through 3-14
Records, 4-10
  file, F-12
  review, F-18
  retention, 7-8, F-18
  taped, 2-18
  written, 2-18
Reference file, 8-8
  controller, 4-1
  facility, 4-1
  facility/platoon, 8-8
  operating position, 4-2
  recent information, 4-2

References, 1-2, B-1, References-1
Responsibilities
  ATC chief, 2-1, 2-18
  ATC facility chief, 2-1, 2-18
  ATC specialist examiners, 2-4
  ATC training supervisor, 2-2, 2-18
  controller-in-charge, 2-4, 2-18
  control tower operator, 2-4
  data systems officer, 2-2
  data systems specialist, 2-3
  shift supervisor, 2-3, 2-18
Risk assessment, 8-1, 8-2
Runway use, 2-13

SARSAT. See Search and rescue satellite.
Search and rescue satellite, 3-7
Services
  FOC/FCC, 8-7
  NAVAID, 8-7
  radar, 8-7
  tower, 8-7
Shifts, fixed facilities, 2-9
SOP, 2-3, B-11
Special visual flight rule operations, Glossary-19
Staff study, 3-6
Standby equipment, Glossary-19
Supervision, 2-1
Supervisory positions, 2-1 through 2-5
Symbols, 1-3

TACAN flight inspections, E-3 through E-5
Tactical
  air control center, Glossary-19
  air control party, Glossary-19
  air traffic controllers' qualification and rating program, 8-5, 8-6
  air traffic services, 8-1 through 8-10
  aviation control team, 8-3
  facility training manual outline, A-22
  operations area, Glossary-19
Tactical Approach Publications System, 8-8
Tapes, 3-8 through 3-14
Telephone lines, 3-6
Temporary airspace restrictions, Glossary-20
Terminal control tower, 8-3
Terms, 1-2, 1-3, Glossary-8
TERPS, 8-8, 8-9
Tests, facility rating, 2-4, 2-10
Theodolite operations, 8-5, D-1 through D-28
Theory of operations examination, F-8, F-9, Glossary-20
Time standards, 2-8

Tower visibility observations, 2-15
TPX-42 system, 5-4
Training, 1-1
  limited weather observer, 2-16
  position qualification, 2-15
  proficiency, 7-1
  qualification, 7-1
  remedial, 7-1
Training and Proficiency Record - Air Traffic Controller.
    See DA Form 3479-R.
Training phases, 7-1 through 7-3
Transcripts, 3-8 through 3-14
Transmit-receive frequencies, 3-9
T/SIP, 8-9

VFR operations, Glossary-20
Visibility, tower, 2-17
Visual flight rules, Glossary-20
Visual meteorological conditions, Glossary-20
VOR flight inspections, E-1 through E-3
Waivers, 1-1
Weather
  data retention, 2-16
  observation relay, 2-16
  requirements, 2-14
  support, USAF, 8-7
Wind indicator equipment, 3-15
Word meanings, 1-3

FM 1-303
5 APRIL 1993

By Order of the Secretary of the Army:

GORDON R. SULLIVAN
General, United States Army
Chief of Staff

Official:

MILTON H. HAMILTON
Administrative Assistant to the
Secretary of the Army
03847

DISTRIBUTION:

Active Army, USAR, and ARNG: To be distributed in accordance with DA Form 12-llE, requirements for FM 1-303, Air Traffic Control Facility Operations and Training (Qty rqr block no. 0717).

☆ U.S. GOVERNMENT PRINTING OFFICE: 1996 406-421/51291