Headquarters,
Department of the Army

FIELD MANUAL
11-55

Mobile Subscriber Equipment (MSE) Operations

Distribution Restriction:
Approved for public release; distribution is unlimited.

***FM 11-55**

Field Manual
No 11-55

Headquarters,
Department of the Army
Washington, DC 22 June 1999

Mobile Subscriber Equipment (MSE) Operations

Contents

		Page
	Preface	**iv**
Chapter 1	**OVERVIEW OF MSE SYSTEMS**	1-1
	Background	1-1
	Employment	1-1
	Major Components	1-2
	MSE Range Extension	1-11
Chapter 2	**HOW TO FIGHT WITH MSE**	2-1
	MSE Architecture	2-1
	Doctrinal Impacts	2-4
	Technical Impacts	2-5
	Task Organization	2-6
	Weighting the Main Attack	2-7
	Command Relationships	2-8
	Support Relationships	2-9
	Offensive Operations	2-9
	Defensive Operations	2-10
	Support of the Separate Maneuver Brigade and Regiment	2-11
	Area Support Concept	2-11
	Split-Based Operations	2-12
	Grid and Enclave Networks	2-13

Distribution Restriction: Approved for public release; distribution is unlimited.

---

*This publication supersedes FM 11-30, 27 February 1991; FM 11-37, 14 November 1990; and FM 11-38, 04 April 1991.

Page

Chapter 3 **ORGANIZATION AND EQUIPMENT** 3-1
Corps Signal Brigade 3-1
Corps Area Signal Battalion 3-6
Corps Support Signal Battalion 3-10
Division Signal Battalion 3-11
MSE Employment Characteristics 3-15
System Control 3-20

Chapter 4 **OPERATIONAL DEPLOYMENT** 4-1
Deployment 4-1
Phased Deployment 4-3
Predeployment (Phase I) 4-5
Installing the Backbone (Phase II) 4-19
Installing Extensions (Phase III) 4-25
Operational Management (Phase IV) 4-27

Chapter 5 **NETWORK DATABASE MANAGEMENT** 5-1
Management and Control 5-1
Database Development 5-1
Digitized Map Requirements 5-3
High Point Data Requirements 5-3
Preaffiliation List Requirements 5-4
Profile List Requirements 5-7
Preprogrammed Conference List Requirements 5-23
Team Label Data File Requirements 5-24
MSE Frequency Management Requirements 5-27
Frequency Management Parameters 5-28

Chapter 6 **CONTINGENCY COMMUNICATIONS PACKAGE AND THE LIGHT CONTINGENCY COMMUNICATIONS PACKAGE** 6-1
Doctrinal Impacts 6-1
Division Signal Battalion Structure 6-1
Equipment Capabilities 6-3
Deployment 6-3

Page

Chapter 7 **TACTICAL PACKET NETWORK** 7-1
Packet Switching Network 7-1
Tactical Packet Network Architecture 7-2
AN/TYC-20 Packet Switch 7-3
AN/TYC-19 Gateway Switch 7-4
CV-4206/TTC Signal Data Converter 7-4
Hosts 7-4
Tactical Name Server and Message Transfer Agent 7-4
Physical Interfaces 7-5
X.25 Interfaces 7-5
Internet Protocol Address 7-6
Host Registration 7-7
Network Management 7-8

Chapter 8 **ASYNCHRONOUS TRANSFER MODE SWITCH** 8-1
Basic Asynchronous Transfer Mode Technology 8-1
Functions 8-2
Deployment 8-3
Operational Software 8-5
Operational Procedures 8-5
Tactics and Techniques 8-7
High-Speed Multiplexer 8-8
Enhanced Transmission Group Modem and Orderwire 8-8

Appendix A **MSE SYMBOLOGY AND EQUIPMENT NOMENCLATURE** A-1

Appendix B **MSE INTEROPERABILITY** B-1

Appendix C **COMMUNICATIONS SECURITY OPERATIONS** C-1

Appendix D **HIGH-SPEED MULTIPLEXER** D-1

Glossary Glossary-1

Bibliography Bibliography-1

Index Index-1

Preface

This manual provides doctrine for planning the employment, deployment, and management of Mobile Subscriber Equipment (MSE) networks. It builds on the knowledge the reader has acquired on MSE from attending the Signal Officer Basic Course (SOBC), Signal Officer Advanced Course (SOAC), and MSE System Control Center-2 (SCC-2) Operations Course. It focuses on MSE at corps and division levels and covers the intended use of equipment. Signal operations may be somewhat different from one unit to the next, so this manual presents various types of operations.

Signaleers must be familiar with the doctrine described in Field Manual (FM) 100-5 and FM 101-5 to maximize the communications services provided by the MSE system.

The proponent of this publication is the United States Army Signal Center. Send comments and recommendations on DA Form 2028 directly to Commander, United States Army Signal Center and Fort Gordon, ATTN: ATZH-CDD (Doctrine Branch), Fort Gordon, Georgia 30905-5090 or via e-mail to doctrine@emh.gordon.army.mil. Key comments and recommendations to pages and lines of text to which they apply. If DA Form 2028 is not available, a letter is acceptable. Provide reasons for your comments to ensure complete understanding and proper evaluation.

Unless this publication states otherwise, masculine nouns and pronouns do not refer exclusively to men.

Chapter 1

Overview of MSE Systems

This chapter gives a brief overview of the mobile subscriber equipment (MSE) systems and range extension capabilities.

BACKGROUND

1-1. MSE is a common-user, switched communications system of linked switching nodes. The nodes form a grid that provides the force with an area common-user system (ACUS). It is one of the major communications systems of an Army force at echelons corps and below (ECB). The other major communications systems include combat net radio (CNR) and the Enhanced Position Location Reporting System (EPLRS).

1-2. The MSE system is digital, secure, and flexible. It contains features that compensate for link or functional element outages, overload in traffic, and rapid movement of users. MSE provides voice and data communications on an automatic, discrete-addressed, fixed-directory basis using the flood search routing technique. MSE supports mobile and wire subscribers with a means to exchange command, control, communications, computers, and intelligence (C4I) information. A tactical packet network (TPN) is a packet switching network that is overlaid on the circuit-switching network of MSE.

1-3. MSE mounts in shelters on high mobility multipurpose wheeled vehicles (HMMWVs) and is easily transportable by roll-on and roll-off aircraft. Organic tactical satellite (TACSAT) equipment and tropospheric scatter (tropo) equipment provide range extension capabilities for MSE. Range extension improves the employment capability of MSE.

1-4. Integrated system control (ISYSCON) enhances the system control (SYSCON) component of MSE. ISYSCON provides the signal commander and his staff with an automated capability to plan, engineer, and operate all communications systems and networks available to the signal force. ISYSCON also integrates the signal force structure into the Army Battle Command System (ABCS) to support mission plan management (MPM).

EMPLOYMENT

1-5. MSE can support a corps of five divisions in an area of operations (AO) up to 15,000 square miles by forming a grid network. For a division, the MSE grid consists of four to six node centers (NCs) that make up the backbone of the network. For the corps, the grid consists of 22 NCs. Throughout the maneuver area, subscribers connect to the small extension nodes/large extension nodes (SENs/LENs) by radio or wire. These extension nodes serve as local call switching centers and provide access to the network by connecting to the node center switch (NCS) at the NC.

1-6. The TPN supports data communications within the corps, joint task force (JTF), adjacent forces, echelons above corps (EAC) assets, North Atlantic Treaty Organization (NATO) forces, and commercial networks. See Appendix A for MSE symbology and equipment nomenclature.

MAJOR COMPONENTS

1-7. MSE has various integrated components to ensure mobile and static subscribers have voice, data, and facsimile capabilities. These capabilities support the subscribers' communications no matter where they are in the MSE grid network of the AO. MSE major components include–

- NC.
- LEN.
- SEN.
- Radio access unit (RAU).
- ISYSCON.
- System control center-2 (SCC-2).
- Line-of-sight (LOS) radio system (components of the switches).
- Subscriber terminals.
- Mobile subscriber radiotelephone terminal (MSRT).

NC

1-8. NCs provide key switching, traffic control, and access points for MSE. After determining the coverage area, NCs are allocated to establish a corps MSE grid network. NCs are primarily linked by LOS radios to provide communications throughout the system via the NCS. TACSAT and tropo are connected to the NCs by cable. If one NC is disabled, the system automatically routes communications through another NC.

1-9. The NCS serves as an access point for LENs, SENs, RAUs, SCC-2s, and ISYSCON. Figure 1-1 shows NCS features. The NCS is the hub of the MSE node and provides network interface for subscriber access elements. It provides automatic subscriber finding features that allow permanent address assignment and removes the requirement of knowing where the subscriber is physically located. It is contained in three S-250 shelters: the switching group, the operations group, and the node management facility (NMF). Each shelter is mounted on an M-1097 HMMWV. The switching group provides the external interface, circuit switching, and associated functions. The operations group provides central processing and operator interface functions.

NCS, AN/TTC-47
Switching Group, ON-306/AN/TTC-47 Operations Group, OL-413/AN/TTC-47 NMF, AN/TSQ-154 TPN • One gateway packet switch per NCS • Two LAN ports (both 802.3 and X.25) • 64 trunks of 16 kbps each on the 1024 kbps trunk group between one NCS and another External terminations • Digital: Trunks and local loops • Analog: NATO applications • 16 DTGs, 15 of which are encrypted by TEDs TGCs • Five internodal. • Six SEN TGCs (two local) Two RAU TGCs (one local) Four DTGs assignable to any combination of internodal, LEN, SEN, SCC-2, or RAU TGCs 24 local loops for digital telephones 10 kW diesel generator, PU-753/M or PU-798

Figure 1-1. NCS Features

LEN

1-10. The LEN provides wired communications for personnel at large command posts (CPs). A LEN enables up to 164 wired subscribers to communicate freely through the large extension node switch (LENS) using automatic flood search routing. Subscribers have access to the NCs and to the rest of MSE via LOS radios that connect to the LENS by cable or super high frequency (SHF) radio systems. Figure 1-2 gives the LENS features.

1-11. The LENS also provides automatic subscriber finding features that allow permanent subscriber address assignment and removes the requirement of knowing where the subscriber is physically located. It consists of two S-250 shelters containing a switching group and an operations group. Each shelter is mounted on an M-1097 HMMWV. The LENS is configured basically the same as the NCS. Differences include the configurations for terminating trunks. The LEN is not a tandem switch because it is not used primarily as an intermediate switching point between other switching centers. The LENS supports flood search routing. The switching group provides the external interface, circuit switching, and associated functions. The operations group provides central processing and operator interface functions. The LENSs can enable CNR users to enter the MSE network and can provide access to commercial networks.

LENS, AN/TCC-46
Switching Group, ON-305/AN/TTC-46 Operations Group, OL-412/AN/TTC-46 TPN • Two packet switches per LENS • Four LAN ports (both 802.3 and X.25) • Seven conditioned diphase X.25 ports • 32 trunks of 16 kbps each or two 512 kbps trunk groups between the LEN and two NCSs External terminations • Digital: Trunks and local terminations • Analog: Commercial telephone Three DTGs encrypted by TEDs, KG-194A • Two DTGs to two different NCs • One DTG assignable to a SEN CNR interface capability 10 kW diesel generator, PU-753/M or PU-798

Figure 1-2. LENS Features

SEN

1-12. The SEN supports the communications needs of smaller CPs. The AN/TTC-48(V1) can support 26 wired subscribers and the (V2) can support 41 subscribers. Users have access to NCs and to the rest of MSE via LOS radios that connect to the small extension node switch (SENS) by cable or SHF radio systems. Figure 1-3 gives SENS features.

1-13. The SEN also provides automatic subscriber finding features when connected to an NCS or a LEN. These features allow permanent subscriber address assignment, and they remove the requirement of knowing where the subscriber is physically located. The SEN is in one S-250E shelter mounted on an M-1097 HMMWV. The SEN consists of switching, multiplexing, and communications security (COMSEC) equipment. It is available in two versions: (V1) and (V2). Both versions provide two commercial office interfaces and a secure digital net radio interface (SDNRI) using the SDNRI unit (SDNRIU), KY-90. The SENS interfaces with the NCS and LENS directly via CX-11230A/G cable, LOS multichannel radio, or multichannel TACSAT.

SENS, AN/TCC-48
TPN • One packet switch per SENS • Two LAN ports (both 802.3 and X.25) • Five conditioned diphase X.25 ports • 16 trunks of 16 kbps each on the 256 kbps trunk group between the NCSs or LEN External terminations • Digital: Trunks and local terminations • Analog: Commercial telephone Two digital switch versions: • Switch V1: 26 digital terminations • Switch V2: 41 digital terminations Two small switchboards (SB-4303) One DTG • Switch V1: 12 channels to NC or LEN • Switch V2: 15 channels to NC or LEN • Two commercial drops CNR interface capability 10 kW diesel generator, PU-753/M

Figure 1-3. SENS Features

RAU

1-14. The RAU picks up signals from the MSRT and sends them to the NCs. When a mobile user moves out of range of one RAU and into another, the telephone service automatically transfers to the next (new) and into the range of another RAU, thus providing automatic reaffiliation. Any subsequent calls will be placed through the system via the new RAU ensuring full and continuous functional affiliation throughout the AO. Figure 1-4 gives RAU features.

1-15. The RAU, AN/TRC-191, is a fully automatic radio interface for MSRT subscribers. The RAU connects directly to the NC by cable or remotely via LOS radio. Through the parent NC, the local RAU provides radio coverage by automatically establishing secure and full-duplex communications between the MSRT and the MSE network. The planning range between the MSRT and RAU is 15 kilometers (9.3 miles). Terrain and weather will affect the actual range.

RAU, AN/TRC-191
Eight digital radios, RT-1539
Capacity of eight simultaneous MSRT calls
One DTG of 256 kbps using 10 channels to NC
Frequency range OCONUS: 30-88 MHz CONUS: 30-50 MHz 30-35 MHz low band 40-45 MHz high band
Full duplex (uses high band/low band concept for simultaneous transmit/ receive)
5 kW diesel generator, PU-751/M or PU-797

Figure 1-4. RAU Features

ISYSCON

1-16. ISYSCON enables the commander to interact with ABCS by exchanging common battle command information with the force commander and his staff and by exchanging communications information with maneuver force signal officers. ISYSCON uses common hardware and software (CHS) for its workstations. The software meets the Department Information Infrastructure (DII) common operating environment (COE) standards for information exchange. ISYSCON is a suite of hardware and software in an S-250 or a standard integrated command post system (SICPS) shelter, and it is transported by heavy HMMWVs.

1-17. ISYSCON extends to other ISYSCONs through the NC from ECB to EAC providing a complete, integrated network picture. ISYSCON will also extend to the Theater Signal Command (Army) (TSC(A)) ISYSCON and to the Joint Network Management System (JNMS). ISYSCON provides the tools to perform the information management process by automating the following functions:

- Network planning and engineering (NPE).
- Wide area network (WAN) management.
- MPM.
- Battlefield spectrum management (BSM).
- COMSEC management.
- System administration.
- Local area management (LAN).

SCC-2

1-18. The existing MSE SYSCON capability is the SCC-2, AN/TYQ-46(V). It monitors, manages, and configures the MSE network (voice and data) for optimum communications. Figure 1-5 gives SCC-2 features and capabilities.

SCC-2, AN/TYQ-46(V)
Large-screen display
Digitized topographical maps
TPN management/planning
Frequency management/planning/distribution
Automatic updating of standby SCC-2

Figure 1-5. SCC-2 Features and Capabilities

1-19. The SCC-2 is an integrated, computerized communications control system that provides automated, near real-time system control to support planning, configuring, reconfiguring, and monitoring the operation and movement of MSE assets. The SCC-2 normally connects to an NCS or LENS using CX-11230A/G pulse code modulation (PCM) cable.

1-20. The SCC-2 comes in two versions: (V1) and (V2). Version 1 at corps consists of three shelters: one technical and two management/planning shelters. Version 2 is a stand-alone workstation for the corps area and support signal battalions. The SCC-2 at division consists of two shelters: one technical and one management/planning.

1-21. The technical shelter contains a network management center (NMC) workstation and a technical workstation that provides a near real-time graphic display of the MSE network. The NMC monitors and controls the TPN. The primary function of the technical workstation is to monitor and to assign management functions. The network planners working inside the management/planning shelter complete the following functions–

- Deployment management.
- SCC-2 supervision and management.
- Boundaries management.
- COMSEC key management.
- Very high frequency (VHF) management.
- Ultra high frequency (UHF)/SHF management.
- Subscriber database management.
- Message management.

1-22. The management/planning shelter houses two system management workstations. These workstations provide a near real-time graphic display of the MSE network and the automated tools necessary to create and change databases required for MSE operations.

1-23. The network planning tool (NPT) with its planning and management functions supports the SCC-2. The NPT provides improved NPE and operational automated information management capabilities. The enhanced NPE and operational functions of the NPT include–

- Environmental parameters.
- Digitized mapping.
- Radio/antenna system engineering.
- Terrain analysis profiling.
- System asset placement.
- Frequency assignment management (VHF, UHF, SHF).
- Team information.
- One-on-one interference analysis.
- Electronic warfare (EW) threat analysis.
- Subscriber list management.
- Word processing program.
- Spreadsheet program.
- Electronic mail (e-mail) program.
- Packet network monitoring.

1-24. The SCC-2 includes the following functional software tools:

- NPE for MSE assets.
- BSM.
- MSE WAN management.
- System administration.
- E-mail.

1-25. The ISYSCON program will field the system in a variety of configurations. The ISYSCON(V1) will consist of two servers, four workstations, and ten remotes. The ISYSCON(V1) will reside at the corps signal brigade and the division signal battalions. The ISYSCON(V2) will consist of two servers, two workstations, and five remotes. The ISYSCON(V2) will reside at the corps area signal battalion. The ISYSCON(V1) will replace the SCC-2.

LOS RADIO SYSTEM

1-26. The LOS radio system consists of versatile links that connect all NCs in a grid network and provides automatic switched services to all wire and mobile subscribers. This radio grid delivers wireless communications to areas covering thousands of square kilometers. The LOS radio system, AN/TRC-190(V), has four versions. Figure 1-6 shows its design features.

LOS Radio, AN/TRC-190(V)
Radio, AN/GRC-226(V) equipped with a digital group multiplexer Two NATO frequency bands • Band 1: 225-400 MHz • Band 3: 1350-1850 MHz Nominal range: 25-40 kilometers 5 kW diesel generator, PU-751/M Four versions • AN/TRC-190(V1) • AN/TRC-190(V2) • AN/TRC-190(V3) • AN/TRC-190(V4)

Figure 1-6. LOS Radio Features

1-27. The AN/TRC-190(V1) is an LOS multichannel radio terminal. It provides point-to-point UHF radio links using the AN/GRC-226(P) radio set between various nodes of the MSE system. If the AN/TRC-190(V1) has an AN/GRC-224(P) radio set installed, it can provide a short-range and a point-to-point SHF radio link. The SHF radio functions as a short-range, down-the-hill (DTH) radio providing a low signature connection between the sheltered CP site and the more exposed LOS terminal site. Each radio link supports a single, full-duplex, group-level connection and a single digital voice orderwire (DVOW) channel. The (V1) is equipped with one AB-1339 mast with Band I and Band III antennas. The planning range of the UHF radio is 40 kilometers (28 miles). The (V1) typically deploys with the SENS or remote RAU.

1-28. The AN/TRC-190(V2) is an LOS multichannel radio terminal. It provides point-to-point UHF radio links using the AN/GRC-226(P) radio set between various nodes of the MSE system. If the AN/TRC-190(V2) has an AN/GRC-224(P) radio set installed, it can provide a short-range and a point-to-point SHF radio link. The SHF radio set operates in tandem with the primary UHF radio link. Each radio link supports a single, full-duplex, group-level connection and a single DVOW channel. The (V2) is equipped with two AN/GRC-226(P) radio sets (one on-line and one spare) and one AB-1339 mast with Band I and Band III antennas. The planning range of the UHF radio is 40 kilometers (28 miles). The (V2) typically deploys as an analog interface to NATO forces.

1-29. The AN/TRC-190(V3) is an LOS multichannel radio terminal. It provides point-to-point UHF radio links using the AN/GRC-226(P) radio set between various nodes of the MSE system. If the AN/TRC-190(V3) has an AN/GRC-224(P) radio set installed, it can provide a short-range and a point-to-point SHF radio link. The SHF radio set operates in tandem with the primary UHF radio link. The SHF radio functions as a short-range radio link providing connectivity for CPs. Each radio link supports a single, full-duplex, group-level connection and a single DVOW channel. The (V3) is equipped

with four AN/GRC-226(P) radio sets (two on-line and one spare) and three AB-1339 masts with two Band I and two Band III antennas. The planning range of the UHF radio is 40 kilometers (28 miles). The (V3) typically deploys with the NCS and is a radio relay.

1-30. The AN/TRC-190(V4) is an LOS multichannel radio terminal. It provides point-to-point UHF radio links using the AN/GRC-226(P) radio set between various nodes of the MSE system. Each radio link supports a single, full-duplex, group-level connection and a single DVOW channel. If the AN/TRC-190(V4) has an AN/GRC-224(P) radio set installed, it can provide a short-range, DTH, and a point-to-point SHF radio link. The (V4) is equipped with two AN/GRC-226(P) radio sets (two on-line) and two AB-1339 masts with Band I and Band III antennas. The planning range of the UHF radio is 40 kilometers (28 miles). The (V4) typically deploys with the LENS.

MSRT

1-31. MSE network users gain mobile access using the MSRT (AN/VRC-97) through the RAU by affiliating onto the network. MSRTs can receive or send voice, facsimile, or data traffic. The planning range between the MSRT and RAU is 15 kilometers (9.3 miles). Terrain and weather will affect the actual range.

SUBSCRIBER TERMINALS

1-32. MSE users initiate and end all communications by using subscriber terminals. The terminals are described below.

1-33. The digital nonsecure voice terminal (DNVT), TA-1035-U, provides voice and data access to the MSE network. Its features include–

- Handset.
- Keypad.
- Digital transmission (16 kilobits per second (kbps)).
- Four wire with data port to interface with computer/facsimile (FAX).
- Compatibility with other terminals.

1-34. The digital subscriber voice terminal (DSVT), KY-68, provides secure access to MSE for all mobile or fixed subscribers. It functions closely to the DNVT, and its features are the same.

1-35. The FAX terminal, AN/UXC-7, transmits critical information such as overlays, diagrams, and handwritten messages over the system in seconds. Ruggedized versions are usable with both DNVTs and DSVTs. Its features include–

- Digital transmission (16 kbps).
- Black and white copy with eight shades of gray.
- Standard issue paper usage.
- Embedded memory with burst transmission.
- NATO interoperable.

FORCE ENTRY SWITCH (FES)

1-36. The FES combines the essential functions of the NCS/LEN/NMF shelters and a RAU in one shelter. The FES combined with an LOS AN/TRC-198 comprises the contingency communications package (CCP). The connections between the FES and the LOS are by cable since no SHF is supplied. The FES has packet switch capability, but it has no gateway function. Therefore, it has no direct connections to adjacent corps or EAC. The FES can be operator-controlled outside the shelter by a dismountable node management facility (DNMF) remote terminal. Figure 1-7 gives the FES features.

FES
One packet switch
Ports for two LANs and six X.25 local hosts
One dial-in port
Dismounted CNR interface
Downsized RAU capability for up to 25 subscribers

Figure 1-7. FES Features

1-37. The FES provides full flood search capability via the downsize routing subsystem (RSS-D), an SHF interface capability, and a DSVT in the truck. The line termination unit (LTU) provides modem/multiplex functions for the local subscriber interface and is equipped with a rear terminal board to permit direct connections instead of the J-1077.

1-38. The LOS AN/TRC-198 is similar to an LOS(V3), except that the LOS AN/TRC-198 UHF radios operate on three separate link connections to the FES (no multiplex) and all links operate on either band.

MSE RANGE EXTENSION

1-39. The corps signal brigade has a range extension company that allows the grid network to flex with the dynamics of rapidly changing tactical operations. Range-extension packages are organic to this company and deploy according to mission, enemy, terrain, troops, and time available (METT-T) needs. The range extension company has one TACSAT platoon and four tropo platoons. Range-extension packages have two transmission media forms: TACSAT and light tropo. Both are vehicular mounted, air transportable, and have multichannel capability. Satellite availability determines the TACSAT range. The tropo range is about 160.9 kilometers (100 miles).

Chapter 2

How to Fight with MSE

This chapter gives an architectural overview of the MSE system, and covers the doctrinal and technical impacts it creates. It also covers the techniques and procedures for tactical MSE employment which establish its use as a combat multiplier. Success during the full range of military operations, including military operations other than war (MOOTW), requires synchronization to support the requirements of all automated information systems (AISs). MSE provides a flexible, secure, and reliable means for the warfighter to synchronize the activities of his force.

MSE ARCHITECTURE

2-1. As the corps commander maneuvers combat units, the MSE network deploys to support these elements. The direction of maneuver and the location of combat, combat support (CS), and combat service support (CSS) units dictate the placement of communications units. MSE supports force subscribers at echelons from corps through battalion CPs. However, as the mission dictates, MSE will provide air defense artillery (ADA) support to elements lower than battalion echelons.

2-2. The MSE network is a nodal switched voice and data communications system that is extended by a radiotelephone to provide area coverage. MSE is part of a three-tier communications network. It ties into the Tri-Service Tactical Communications (TRI-TAC) tier supporting the EAC network at selected NCs. MSE also provides CNR users with an interface to the ACUS via SDNRIU. This capability links Single-Channel Ground and Airborne Radio System (SINCGARS) users with telephone subscribers which provides an added method of communication for maneuver units. FM 11-32 covers the planning and operation of the SDNRI capability. Figure 2-1 shows the architecture of the MSE network.

2-3. NCSs are arrayed from the corps rear boundary forward to the maneuver brigade based on geographic and subscriber density factors. NCSs provide the entire corps with connectivity and switching capability. NCs are somewhat independent of the existing command structures. Normally, not all NCs are committed at any given time. This gives SYSCON the flexibility to change MSE to meet the operational mission. The corps signal brigade can deploy 22 NCs, and each division signal battalion can deploy 4 to 6 NCs. Each NC must connect to at least 3 other NCs to provide route path survivability. This forms the backbone grid network.

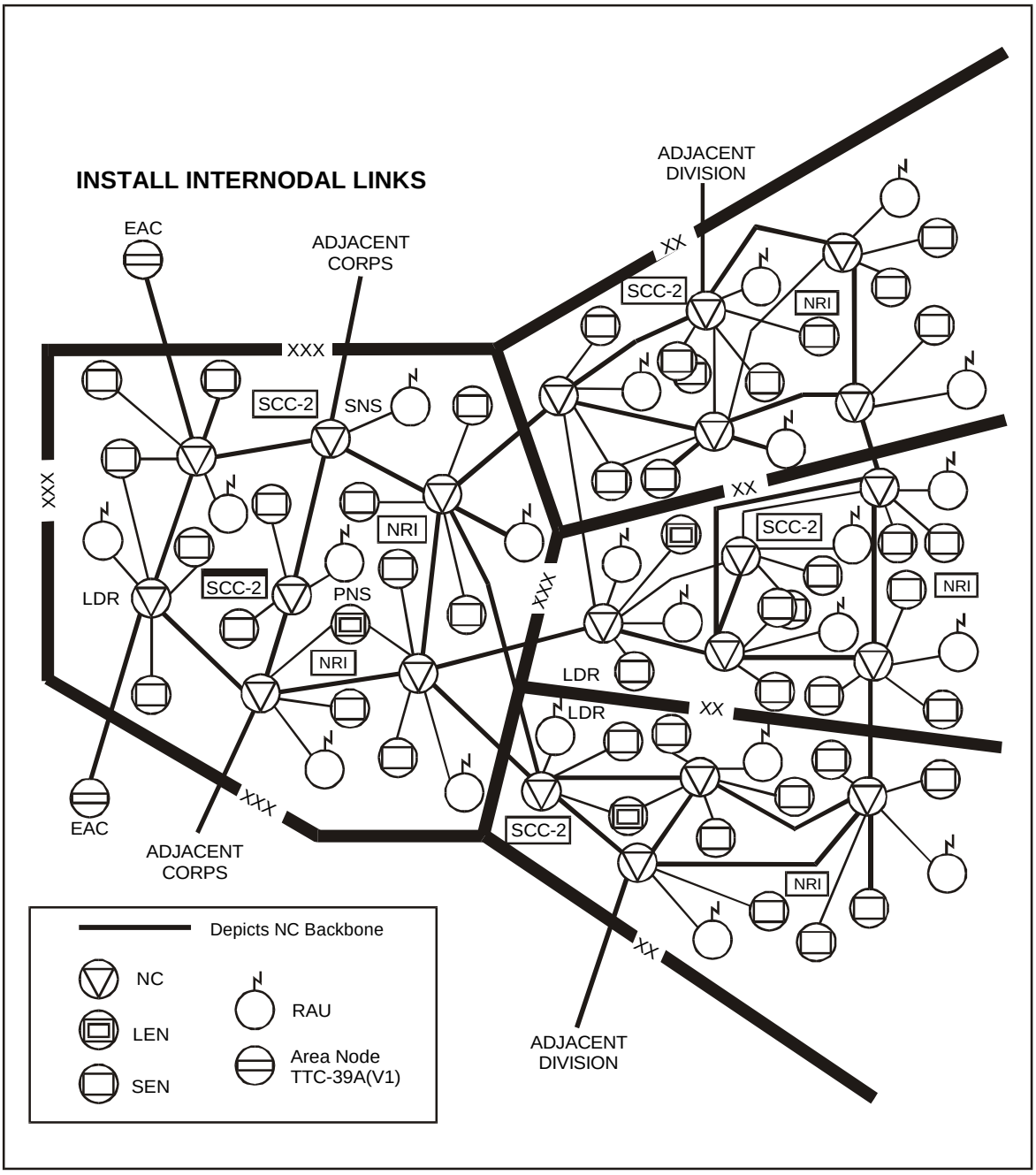

Figure 2-1. MSE System Architecture

2-4. The standard five-division corps MSE network can serve up to 26,100 subscribers from battalion through corps. This includes–

- 8,200 DNVT subscribers.
- 1,900 MSRT subscribers.
- 16,000 data subscribers.

2-5. Figure 2-2 shows the MSE architecture divided into three layers. The upper layer is backbone structure that consists of interconnected NCs. The middle layer consists of LENs and SENs that provide CPs with network access. The bottom layer consists of static (wire line) and mobile subscribers. Up to 264 SENs and 9 LENs can deploy to support the corps. Typically, a SEN serves a brigade headquarters, separate battalion, or CP. Each of the 112 RAUs (13 in each division and 47 in the corps) support from 20 to 25 mobile subscribers.

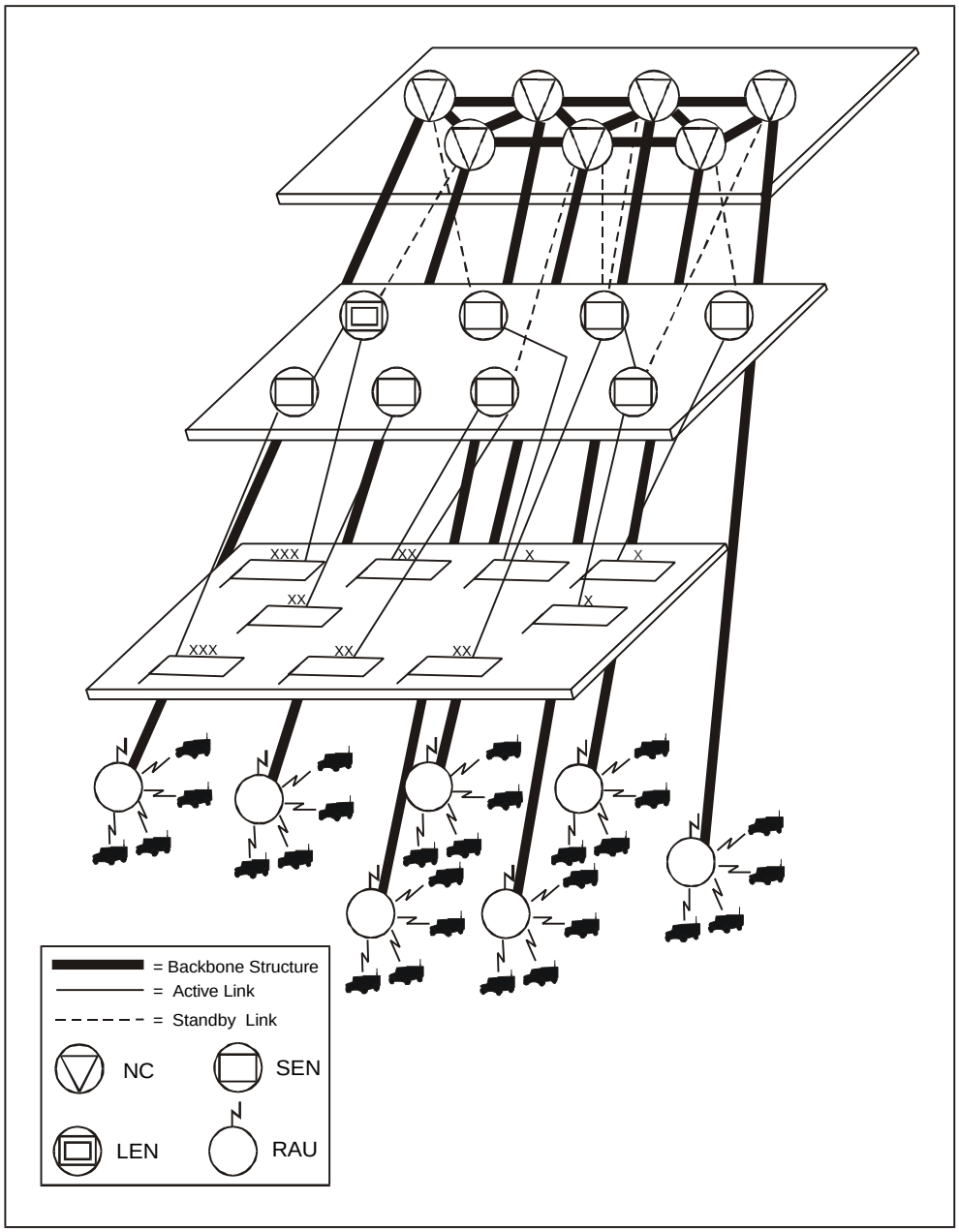

Figure 2-2. MSE Architecture Layers

2-6. The NCs serve as hubs for the entire nodal system. The LENs and SENs are extension nodes that branch off these NCs. The extension nodes provide voice, data, and facsimile communications to corps, division, and brigade CPs. LOS UHF radio links provide connectivity among NCs and from NCs to LENs and SENs. This architecture furnishes all MSE subscribers with automatic switching. Each NCS platoon has net radio interface (NRI) capabilities.

2-7. A five-division corps MSE network has seven SCC-2s, two at the corps signal brigade headquarters and one each in the division signal battalions. The SCC-2 determines, with input from unit deputy G6/S6, where the NRI can best serve the subscriber. A LEN or SEN can have the NRI installed. The SCC-2 is an integral element of SYSCON. The SCC-2 directs network management and connects to host NCs by cable.

2-8. Mobile subscribers with MSRTs can access the MSE network via a RAU. Any subscriber in the network can be called by simply dialing the subscribers' number regardless of location. The mobile subscriber can talk while on the move, as long as one of the corps deployed RAUs is providing radio coverage. While moving from one RAU's range to another, the MSRT in the users vehicle automatically searches for the nearest RAU's beacon signal to maintain affiliation. This does not require operator intervention.

DOCTRINAL IMPACTS

2-9. MSE supports the corps and divisions' communications requirements on the battlefield. MSE also provides links with the theater communications system and to EAC elements, as required. MSE furnishes CP communications to maneuver brigades and mobile subscriber radiotelephone service to maneuver battalions well forward into the maneuver area. It provides continuous and in-depth communications during force and CP movement. MSE small wire and cable requirements reduce CP setup and tear down times. Flood search ensures network survivability in spite of damage, overload, and changes in subscriber locations. The RAU provides MSRT connectivity for mobile subscribers when extension nodes and CPs move.

2-10. MSE provides improved network access for units due to the increase of node entry points over the previous ACUS. Units no longer need to cluster together for system service as before. The essential user bypass (EUB) allows continued subscriber services for critical users if their parent NCS cannot provide call processing. Centralized network management helps the corps signal brigade commander maintain technical control (TECHCON) over all corps assets. Uniform technical operating standards for the corps network must be developed through effective standing operating procedures (SOPs). A solid working relationship among corps, division, and maneuver brigade signal planning staffs is crucial for success.

2-11. MSE provides a seamless network between corps and divisions. Common equipment and team structure allow corps elements to reinforce division units. Signal planners must deploy MSE assets to best support the intent of the corps and division commanders. The corps often operates in division areas, proving the need for uniform SOPs throughout the corps. Subscriber equipment is user owned and operated. The signal battalion or

brigade is not responsible for customer education; however, signal officers should be prepared to advise on how to accomplish customer education.

2-12. The maneuver brigade/battalion S6 performs critical functions for signal network managers. These functions include–

- Training users.
- Defining customer needs.
- Coordinating detailed unit communications and data requirements.
- Distributing COMSEC keys and frequencies.
- Identifying subscriber problems accurately.
- Ensuring troubleshooting is a coordinated effort.
- Ensuring subscribers install WF-16 field wire properly.
- Coordinating all jump locations

2-13. The NPT provides automation support for many signal planning and engineering functions. These include profiling, producing annexes for operation orders (OPORDs) and fragmentary orders (FRAGOs), frequency management, some network functions, some equipment/team status functions, and some COMSEC functions. The SCC-2 further enhances the NPE capability and provides for MPM. Effective MPM depends on exchanging information between all signal staffs. Signal support platoon leaders and the S6 customers must maintain a close working relationship to provide efficient communications service.

TECHNICAL IMPACTS

2-14. In the MSE system, the hardware and software determine call routing, switch trunk capacity, and signaling characteristics. This allows signal planners to manage more assets. Only in special cases (such as non-MSE gateways) do signal planners make these decisions.

2-15. Flood search routing will automatically route calls over the most optimum path on a call-by-call basis between any two end points within the area of coverage. This omits the need for switch routing tables. When a call request is not on the switch's directory list, a call initiate search message for that number is sent out to each adjacent NCS and LENS. Thus, the procedures discussed below are implemented.

2-16. Each NCS/LEN receiving a search message checks its subscriber affiliation table for the called directory number. If the called party is not affiliated at that switch, the search message is automatically forwarded to all other connected NCSs.

2-17. Then, the NCS marks the path (but does not reserve it) for possible routing. However, the LEN does not forward search messages received from NCSs. This prevents tandem traffic through the LEN. At the terminating switch, where the called party is affiliated, a return message is sent back toward the originating switch over the marked routing path. The originating switch then broadcasts end-of-routing messages to all connected nodes. In turn, the uninvolved switches in the marked path can clear their routing registers of the call attempt.

2-18. Imposed restrictions on the broadcast of search messages regulate networkwide traffic and provide call precedence. A threshold level is periodically determined for each interswitch link. Search messages are sent only if the precedence level is equal to or higher than the current threshold level for that link. Search messages are sent to connected switches in a most-idle or preemptable-trunk order that automatically selects the route. This reduces network congestion. A search message is never sent over a link in which trunks are not available.

2-19. Common-user switching uses a fixed numbering plan; however, units must maintain and publish directories.

2-20. The MSE network has a packet switch network overlay called the TPN. It provides needed data communications in the tactical environment at ECB. The TPN is fully compliant with the US Army's packet switch network. The TPN is overlaid on the voice network without competing for access needed to maintain MSE voice traffic.

2-21. MSE meets the requirements to interface with other communications systems. See Appendix B for a detailed discussion of MSE interoperability. These systems include–

- The Improved Army Tactical Communications System (IATACS).
- The TRI-TAC system.
- The Tactical Internet (TI).
- Joint services.
- Data communications systems.
- NATO systems.
- Allied military systems.
- Host-nation commercial telephone systems.
- The Defense Information System Network (DISN).

2-22. Signal network planners and managers must have a clear understanding of MSE capabilities and limitations. TM 11-5800-216-10 volumes 1 through 4 contain technical information on MSE for planners and managers. MSE assemblages meet the roll-on/roll-off requirement for air movement. Existing aircraft can transport HMMWV mounted shelters without structure or weight changes.

TASK ORGANIZATION

2-23. Signal assets should organize early in the planning process and should deploy with their supported organization when appropriate. This ensures an understanding of en route mission planning changes and provides immediate communications to the supported unit. All units will have their SEN teams linked before deploying. Selected CPs that depart ahead of all other assets should link with their SEN teams before leaving their home station. The maturity of the theater of operations will assist in determining the best course of action for supporting the supported unit's communications needs. Corps signal assets attached to division units should link as soon as possible. However, signal planners must still consider the immature-theater and early

entry at EAC and ECB. Task organizing too early may limit flexibility if the main effort shifts from one maneuver unit to another. Pre-task organized units IAW their SOP will minimize any risks. A solid understanding of the corps' contingency plans (CONPLANs) is imperative to ensure all prospects are considered before attaching significant numbers of communications assets to any single division.

WEIGHTING THE MAIN ATTACK

2-24. The main attack must be weighted and can be done in many ways. Weighting can be obtained by the direct support (DS) of additional NCs from corps to division, DS of medium- and long-haul communications assets, placement of additional assets in certain areas, and increasing network connectivity. The theory is that it is easier to move a pre-positioned NC than to jump one currently in use. However, an NC from another division can be attached under the direction of the G3, if required. Then, the intent is to leapfrog NCs to keep up with the tempo of the battle as shown in Figure 2-3.

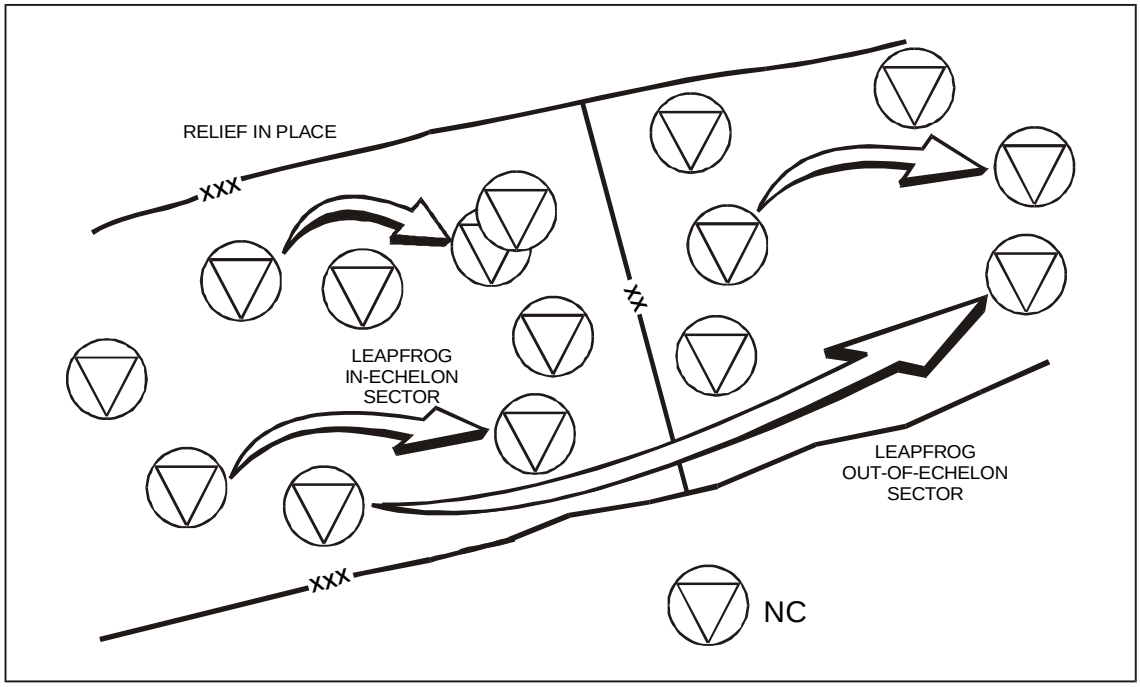

Figure 2-3. Maneuver (Weighting the Main Attack)

2-25. Tropo and multichannel satellite terminals can terminate or extend special circuits. They also can terminate long locals or dial and hold circuits from EAC or joint service switches. These circuits include–

- Tactical Data Information Link (TADIL) to support ADA data transfer.
- Contingency Tactical Air Control Planning System (CTAPS).
- Secure Internet Protocol Router Network (SIPRNET).
- Nonsecure Internet Protocol Router Network (NIPRNET).

- Joint Worldwide Intelligence Community System (JWICS).
- Automatic Digital Network (AUTODIN).
- DISN.
- Defense Messaging System (DMS), when fielded.
- Global Command and Control System-Army (GCCS-A).

COMMAND RELATIONSHIPS

2-26. Signal units must clearly understand the doctrinal terminology for command relationships. FM 101-5-1 provides the Army definition for these important terms. In most cases, the Army definition applies directly to signal units. The terms attached and operational control (OPCON) are standard Army terms. TECHCON is a new term that describes the situation unique to signal operations. The terms are defined below.

ATTACHED

2-27. In signal operations, a signal company from a corps signal battalion may attach to a division signal battalion. The gaining commander exercises the same degree of command and control (C2) and the responsibility for the attached unit, as he does over units organic to his command. Attachment orders must clearly state additional responsibilities, such as the Uniform Code of Military Justice (UCMJ) and administrative and support responsibilities. When medium- or long-haul communications assets are attached to division signal battalions from corps signal units, the gaining commander maintains authority for their employment. While attachment is usually temporary, careful consideration must be used in determining when to attach signal assets. Once employed on the battlefield and integrated into the network, it is not easy to shift control of previously attached units immediately upon the revocation of attachment orders.

OPCON

2-28. This is the authority delegated to a commander to direct forces assigned so the commander may accomplish specific missions or tasks that are usually limited by function, time, or location; to deploy units concerned, and to retain or assign tactical control of those units. Signal units primarily use OPCON for movement. From both a division and corps perspective, NCs are OPCONed to maneuver brigades, armored cavalry regiments (ACRs), or other units for movement only. This occurs when these units are responsible for movement along designated routes or corridors and must control all units in their area for movement. Once NCs move forward and position in their designated locations, the OPCON relationship terminates. Usually, OPCON is not used for any other purposes.

TECHCON

2-29. In signal operations, TECHCON provides the authority to control the technical aspects of the engineering and operation of the assigned portion of a communications network. There are several applications of TECHCON. NCs have control over all links coming from their extension nodes and remote RAUs. The link designator establishes control of internodal links. For example, if the link designator for an internodal link is 0712, then NC 07 is the controlling end of the link and has master control over the link. NCs can be placed under battalion control (BATCON) of a signal battalion that is not its parent. For instance, an NC from a corps signal battalion is placed under the control of a different battalion and is considered TECHCONed to that battalion. TECHCON gives the controlling battalion the authority over all technical aspects of the NC operation. The term BATCON applies to the S3 staff operations of the battalions making up the corps signal brigade. The controlling battalion under the area support concept normally provides logistical support.

SUPPORT RELATIONSHIPS

2-30. Signal units must clearly understand doctrinal terminology for support relationships. Effective support relationships are critical to the sustainment of an effective communications network. FM 101-5-1 provides the Army definition for these important terms. DS and general support (GS) are defined below.

DS

2-31. In managing all communications networks, DS relationships are frequently established. The doctrinal definition applies. Communications assets can be placed in DS of other signal units. SENs are provided logistical support by the supporting unit, but remain under the TECHCON of their unit. Logistical support from the supported unit is typically coordinated on a case by case basis.

GS

2-32. All NCs, remote RAUs, and their associated transmission media are in GS of the corps or division. By definition, signal units who employ assets in the network provide support to the total force and not to any particular subdivision of the supported unit. Subordinate units of the corps and division do not control signal assets that are in GS of the corps or division.

OFFENSIVE OPERATIONS

2-33. All operations are generally phased, and communications support for each phase depends on many considerations. Different types of offensive operations will dictate certain levels and types of support as shown below.

PLANNING

2-34. In preparing for offensive operations, division signal units should maintain uploaded NCs ready for rapid movement behind the lead attack elements. When possible, nodes and remote RAUs are positioned behind the forward line of own troops (FLOT) far enough to protect them from threat tube artillery. S2 staffs focus on threat artillery to minimize the threat to assets. Remote RAUs are positioned forward to provide MSRT coverage to maneuver battalion CPs. Maximum use of corps nodes in division areas provides the springboard for the attack division to employ its MSE assets for the offensive operation.

EXECUTION

2-35. During the attack, NCs follow advancing maneuver brigades with known locations for emplacement. Several possible locations should be identified to cover contingencies. Frequency modulated (FM) radios or single-channel satellites will be the primary means of communications on-the-move. In certain cases, remote RAUs will provide some MSRT coverage if connectivity to a node can be established. Each node and extension team should have various sets of team packet planning information to ensure options exist if communications with the BATCON or SYSCON are not possible. Using medium- and long-haul assets for range extension should be planned to ensure division networks remain connected to the corps network at all times. Usually, the division main and rear CPs will not move during the initial phases of the attack and will remain connected to the network. This is not true with the corps tactical CP. Communications links between commanders are always essential. Planning involves multichannel satellites linking the SEN, supporting the division tactical CP, to the corps network to ensure this critical connectivity. SENs supporting maneuver brigades will not install their links until the initial objectives are secured because tactical operations centers (TOCs) move too fast. MSRT coverage in the division rear areas is sacrificed to support forward operations.

DEFENSIVE OPERATIONS

2-36. Defensive operations are phased, and communications support for each phase depends on several considerations. The defensive role described here may not apply to all situations, but it will prove useful for most. The elements of the defensive role are shown below.

PLANNING

2-37. Placement of nodes and remote RAUs must ensure MSRT coverage to at least the forward deployed maneuver battalion CPs. They should be out of the range of threat tube artillery. Additional locations for forward deployed nodes and remote RAUs are required for survivability purposes, and several locations should be identified for short-notice jumps. These contingency locations should be within 5 kilometers (3.1 miles) of their deployed locations, and all personnel should know the routes to each. Some nodes should be uploaded and prepared to move forward with the counterattack. Assistance from the corps is important when placing corps nodes in the division rear areas. Close coordination with the G3 regarding penetrations, creating

salients, and the locations of engagement areas is important for the survivability of communications assets. Plans must be made for synchronizing the movement of nodes and RAUs that fall into these areas. Some medium- and long-haul assets should be held in reserve and remain uploaded for movement with the counterattack.

EXECUTION

2-38. During the defense, signal commanders must be on the alert for rapid changes in division or corps plans. Nodes that are in danger must move to other locations when possible. RAU markers can be turned off in various sequences to reduce the static electronic signature that emanates from blanket RAU coverage. Maneuvers may dictate rapid jumps of RAUs. During movements out of salient or engagement areas, assets taken out of the system should remain uploaded and prepared to support the counterattack. MSRT coverage in the division rear area should be sacrificed to support the forward areas. Corps nodes and RAUs can again be placed in the division rear area to help support division requirements.

SUPPORT OF THE SEPARATE MANEUVER BRIGADE AND REGIMENT

2-39. The corps signal brigade will support the communications requirements of the separate maneuver brigade, regiment, and separate EAC theater missile defense (TMD) elements. These units have no organic MSE equipment other than subscriber devices. To support this type of operation, the supporting unit may have to dedicate almost one entire company (two NCs, three to five SENs, and four RAUs). Units, such as the ACR, are usually in a screening mission forward of or to the flank of the division. The ACR is often the first unit in the theater and deploys great distances to conduct its screening mission. Close coordination with division signal units is imperative, as division boundaries are established behind or to the flank of the ACR. Coordination is not only for network connectivity but also for logistical and electronic maintenance support. It is necessary to dedicate long-haul assets to the company supporting the separate brigade and regiment. These assets sometimes provide internodal connectivity and, in rarer cases, provide long-haul connectivity for a SEN at the regimental TOC. The overriding consideration is to ensure effective communications to and from the separate brigade, the regiment commander, and the corps commander.

AREA SUPPORT CONCEPT

2-40. While area support is simple in theory, it can be complicated in execution. Division and corps units must operate under the same rules. The concept calls for geographical boundaries between the corps signal battalions being jointly drawn by the brigade S3 and S4. Boundaries with the division signal battalion usually follow the division rear boundaries unless otherwise negotiated. Placement of corps nodes in division rear areas occurs often and requires close coordination with division signal units and division movement control activities. Control of corps assets in a division signal battalion AO must be coordinated between the corps and division signal unit. Corps assets

can also be used as springboard platforms. When possible, division signal units can remain uploaded to facilitate rapid movement to support offensive operations. During early phases of operations, signal units must provide communications support to assembly areas and ports. MSRT coverage should be maximized along movement corridors, main supply routes (MSRs), and other critical areas. Signal battalions are then responsible for all logistical support for GS signal assets and electronic maintenance support for all signal assets within the geographical boundary. Exceptions occur but must be negotiated between responsible units. Battalions providing support must take the lead in negotiating alternative solutions, when necessary. There is a relationship between TECHCON and logistical support, but they may not always be the same.

SPLIT-BASED OPERATIONS

2-41. Split-based operations place unique demands on the tactical communications network. Split basing is downsizing the traditional management elements like intelligence, logistics, and planning to the bare bone requirements for forces in the forward deployed area. The intent is to move data from the home base instead of deploying all C2 structure and supporting personnel and facilities. Split basing saves lift assets, without disrupting operations, by current communications capabilities. Communications planning must be carefully accomplished because normal organic communications and logistics support may not be adequate. Signal planners must analyze the mission to ensure that all the needs of forward-deployed force's, TMD assets, especially logistics, intelligence, and planning functions, are adequately supported with communications. The communications support package must contain its own logistical support to ensure initial sustained system operation. To support the initial assault CP into the forward deployed area, a robust communications package must be identified and prepared to deploy with the division or corps staff. As a minimum, a multichannel satellite link is required to provide long-local service from an existing NC at home base using low-rate multiplexers (LRMs) or remote multiplex combiners (RMCs). Alternatively, the satellite link could provide connectivity for a SEN in the forward-deployed area for larger contingency operations, as required. Connectivity to DISN systems and support for possible special circuits must be considered in planning the appropriate communications support package both within and between the split bases.

GRID AND ENCLAVE NETWORKS

2-42. Signal doctrine focuses on fighting with a five-division corps that demands grid employment of MSE throughout the AO (see Figure 2-1). While the military situation in some theaters of operations still justify such an employment of MSE, many scenarios dictate an AO consisting of enclaves that are linked and require a modified grid for communications support. This is true when considering joint and/or combined operations including MOOTW. Figure 2-4 shows MSE enclave network deployment.

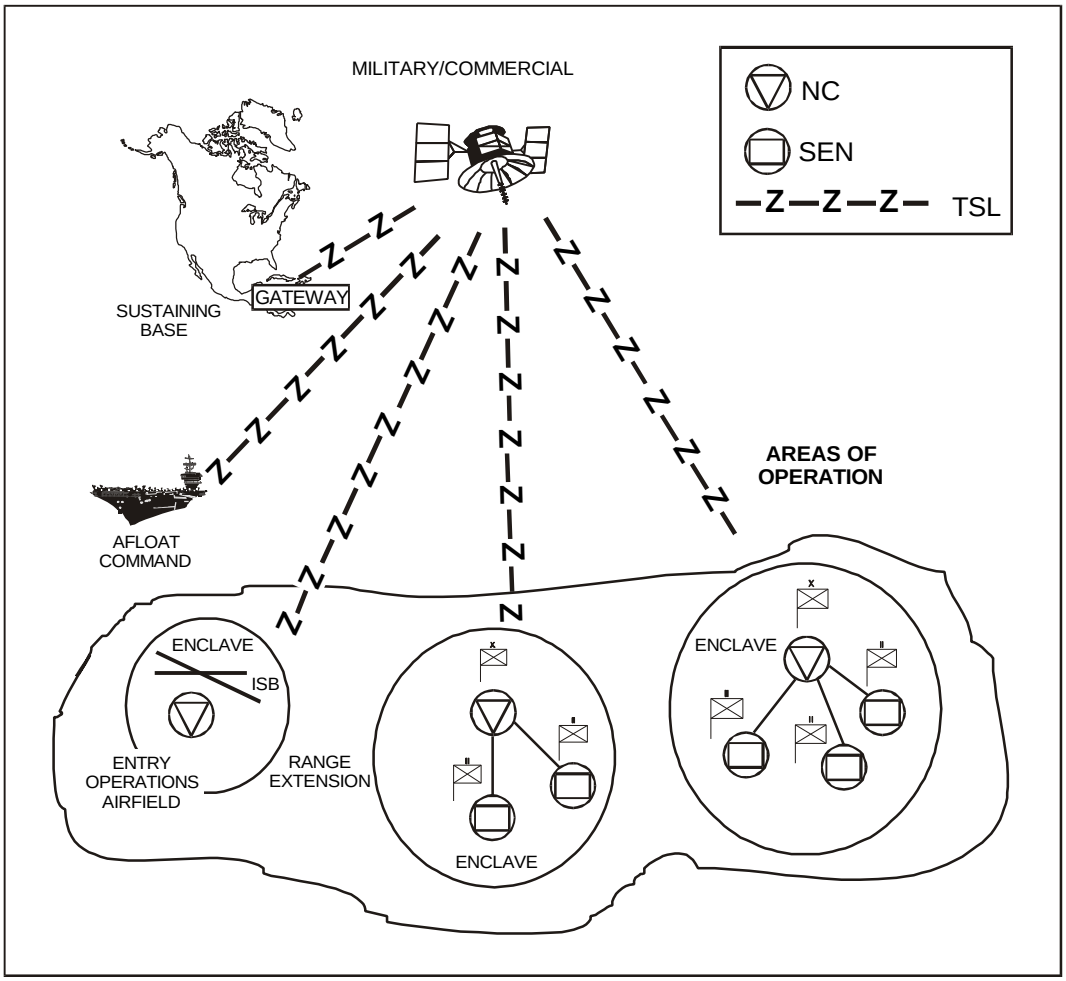

Figure 2-4. An MSE Enclave Network

2-43. FM 100-5 explains revised Army doctrinal approaches to fighting from forward deployed forces to force projection forces with sanctuary CPs remaining at home bases. Enclave networks frequently demand maximizing medium- and long-range range extension communications assets and flexibility in NPE. Planning should include using commercial and host nation systems. Connectivity to the DISN and the digital NATO interface (DNI) system is necessary, if appropriate. When using an enclave network, one must consider:

- Command relationship.
- Control.
- Logistics (parent unit provides the technical assistance).
- Switch group (which SCC-2 controls which nodes).
- Internet protocol (IP) addresses.

2-44. The corps and division G3s must decide and coordinate these actions before deployment. This information should be explained in the OPORD.

Chapter 3

Organization and Equipment

This chapter details the organizational structure and equipment of the units responsible for installing, operating, and maintaining the MSE network.

CORPS SIGNAL BRIGADE

3-1. The standard corps signal brigade is the center of the corps MSE network (Figure 3-1). It consists of a headquarters and headquarters company (HHC), one or more corps area signal battalions depending on the size of the corps, a corps support signal battalion, a range extension company, and a visual information company. It provides SYSCON of the corps area MSE network and provides TECHCON of the division signal battalions' installed components. The advantages of this arrangement are–

- Greater operational flexibility.
- Increased logistics support efficiency.
- Easier personnel management.
- Centralized MSE assets control.

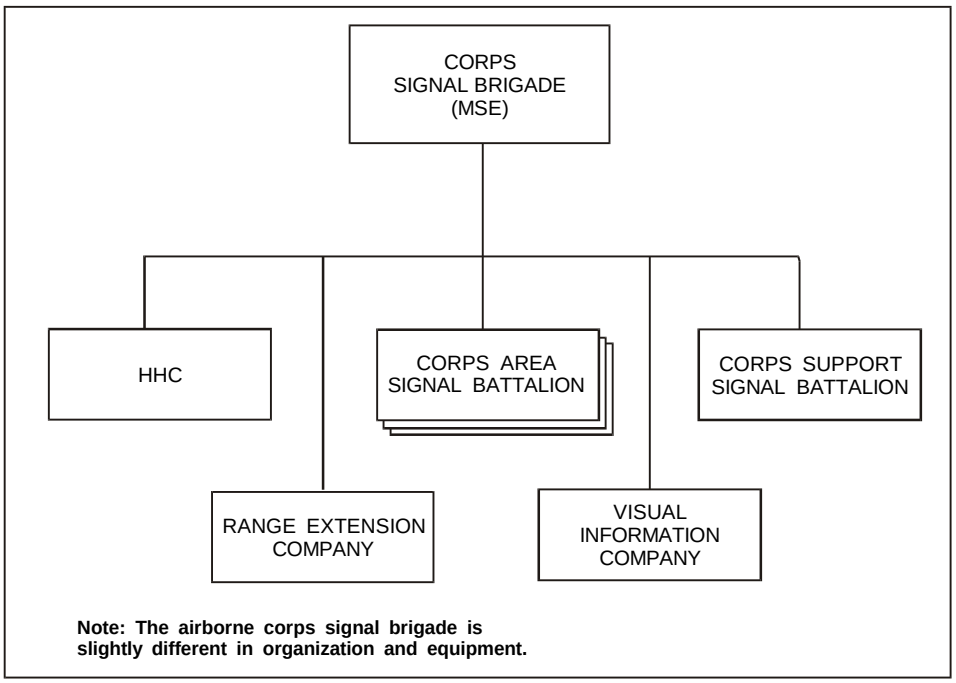

Figure 3-1. Standard Corps Signal Brigade

3-2. The HHC corps signal brigade consists of the brigade headquarters, the headquarters company, and the corps signal office (Figure 3-2). Figure 3-3 lists the functions of the HHC.

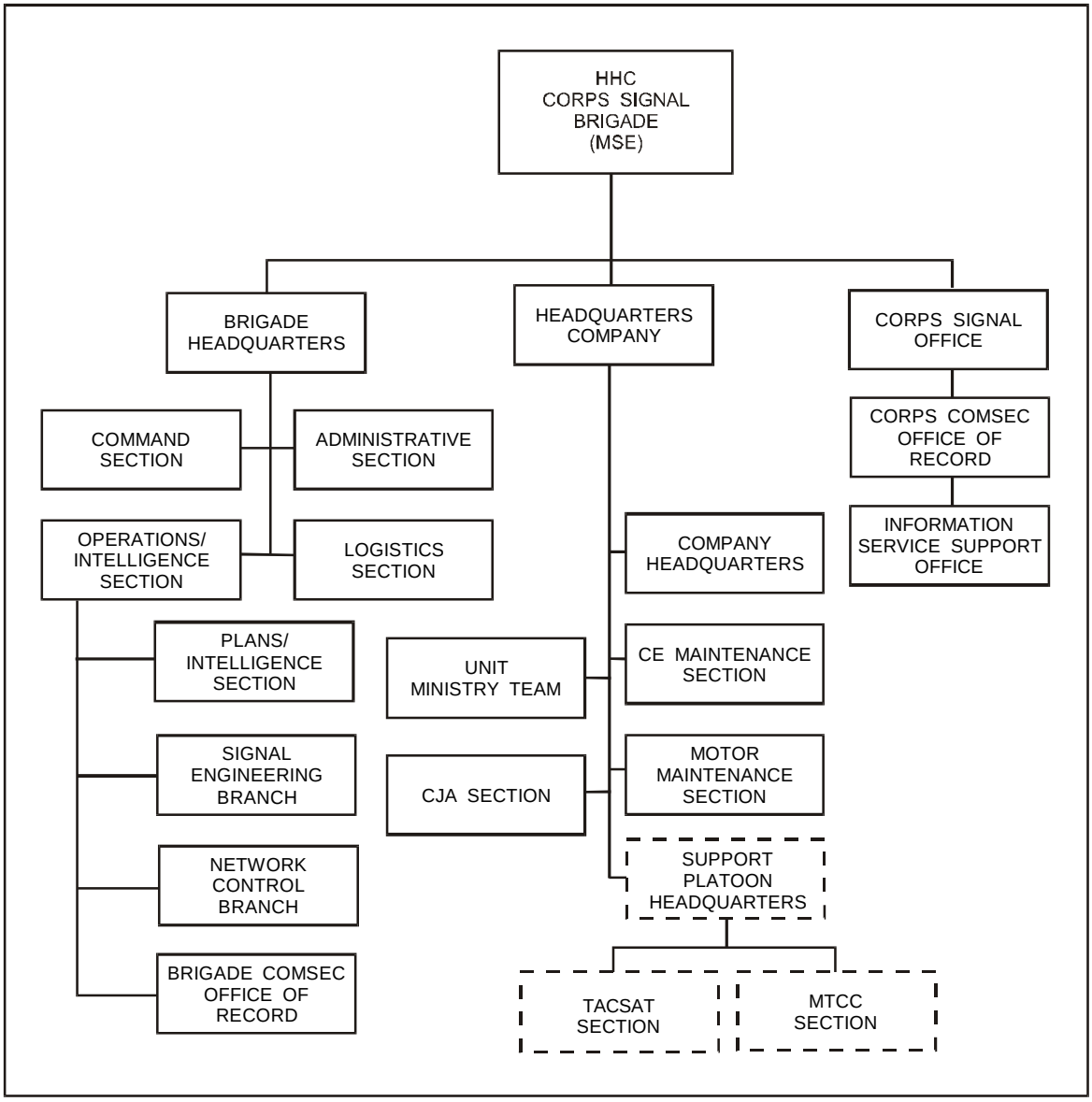

Figure 3-2. HHC Corps Signal Brigade

HHC Functions
Directs and coordinates operations of the corps signal brigade including its battalions.
Supervises the installation, operation, and maintenance of the corps communications systems.
Provides the facilities the signal brigade commander uses to command and control the brigade including the SCC-2s.
Provides a signal staff element (corps signal office) to advise the corps on communications and COMSEC matters (corps and brigade COMSEC offices of record).
Operates a semi-automated SYSCON (fully automated with the fielding of ISYSCON).
Performs all signal management system functions for the signal brigade commander (network control branch).
Installs, operates, and maintains TACSAT communications systems and AN/TYC-39 message switches.

Figure 3-3. HHC Functions

3-3. The brigade headquarters has a command section, administrative section, operations/intelligence section, and logistics section. The operations/intelligence section consists of the plans/intelligence section, signal engineering branch, network control branch, and the brigade COMSEC office of record (BCOR). The brigade headquarters establishes the SYSCON center as part of the brigade CP.

3-4. The plans/intelligence section is part of the S3/SYSCON for the brigade. Figure 3-4 lists the functions of the plans/intelligence section.

Plans/Intelligence Section Functions
Plans, coordinates, and supervises the plans and intelligence requirements for the brigade.
Develops training plans for the brigade's defensive chemical operations.
Assesses chemical operations and training situations

Figure 3-4. Plans/Intelligence Section Functions

3-5. The signal engineering branch is part of the S3/SYSCON for the brigade. Figure 3-5 lists the functions of the signal engineering branch.

Signal Engineering Branch Functions
Develops plans for establishing communications systems.
Determines equipment suitability, adaptability, and compatibility with existing military communication systems.
Determines installation and employment for quality transmissions over installed systems.
Responds to frequency requests and maintains associated records for brigade units.
Integrates allied, joint, and commercial communications into the corps communications network.
Analyzes traffic status reports.
Maintains direct coordination with the SCC-2/SYSCON in the network control branch.
Informs the SCC-2/SYSCON of current and future facility needs throughout the corps communications network.

Figure 3-5. Signal Engineering Branch Functions

3-6. The network control branch is part of the S3/SYSCON. Figure 3-6 lists the network control branch functions. The network control branch installs, operates, and maintains two SCC-2s: one active and one standby. The SCC-2s facilitate network management and control tasks with computer-assisted tools. These tools–

- Assist in issuing OPORDs and directives to node managers.
- Assist in receiving and processing messages and reports.
- Manage radio frequencies (RFs), COMSEC, equipment/personnel status reports, system activation/deactivation, and reconfiguration including network radio links.

3-7. The BCOR is part of the S3/SYSCON and is responsible for the brigade COMSEC account. It also provides COMSEC logistics support for the control and distribution of internal brigade and subordinate battalion COMSEC material.

Network Control Branch Functions
Provides MSE automated frequency management.
Performs terrain analysis and path profiling.
Conducts automated system engineering functions.
Provides equipment status reporting.
Performs COMSEC key management.
Provides link and network load status.
Maintains personnel management database.
Manages system traffic flow and grade of service.

Figure 3-6. Network Control Branch Functions

3-8. The headquarters company has a company headquarters, communications-electronics (CE) maintenance section, motor maintenance section, unit ministry team, and a Civil/Judge Advocate (CJA) section. It may contain a support platoon headquarters that provides the TACSAT section and a modular tactical communication center (MTCC). Figure 3-7 lists the functions of the headquarters company.

Note: Signal brigades that have an organic company do not require the TACSAT section in the brigade HHC.

Headquarters Company Functions
Provides internal support to the brigade and to the company.
Maintains communications equipment for the brigade.
Maintains the vehicles for the brigade.

Figure 3-7. Headquarters Company Functions

3-9. The corps signal office has a corps COMSEC office of record (CCOR) and an information service support office. The corps signal office is responsible for performing signal management functions for the corps. These functions provide adequate communications to the corps commander for commanding and controlling his forces. Figure 3-8 lists the functions of the corps signal office.

Corps Signal Office Functions
Advises on command signal matters.
Prepares signal estimates, plans, and orders.
Supervises signal activities within the command.
Manages corps unit signal requirements.
Manages operational and contingency COMSEC matters.
Develops COMSEC operational plans and policies.
Plans, designs, and manages the integration and interconnectivity of tactical and nontactical information networks and communications systems.

Figure 3-8. Corps Signal Office Functions

CORPS AREA SIGNAL BATTALION

3-10. The corps area signal battalion provides the signal facilities that support the plans developed by the corps signal staff and the corps signal brigade staff. The corps area signal battalion consists of an HHC, three standard area signal companies, and a signal support company (Figure 3-9). Figure 3-10 lists the functions of the corps area signal battalion.

3-11. The airborne corps area signal battalion has three variations. One battalion has two contingency area companies and one standard area company. A second battalion has two standard area companies and one contingency area company. The third battalion has three standard area companies. All battalions have an NC instead of a LEN in the support company.

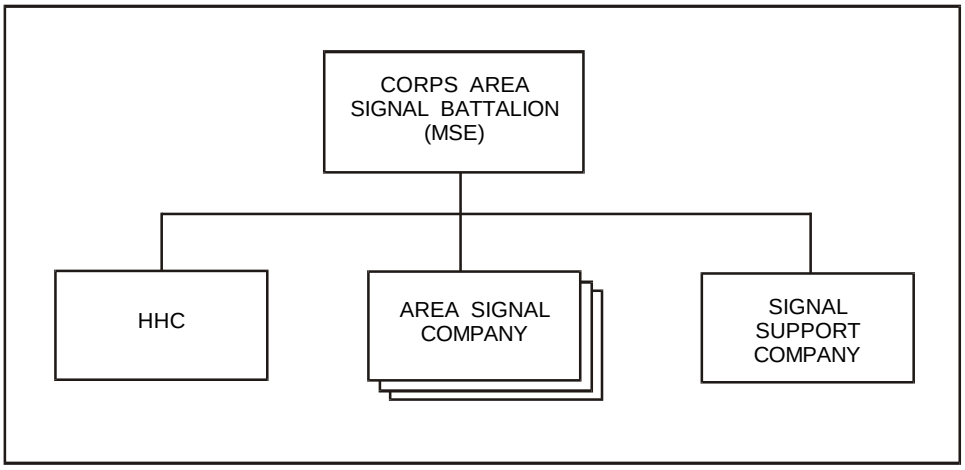

Figure 3-9. Typical Corps Area Signal Battalion

Corps Area Signal Battalion Functions
Advises the signal brigade commander on all communication matters.
Directs the installation, operation, and maintenance of battalion communications systems and facilities for implementing plans developed by the corps signal staff to support unit communication requirements.
Operates the operations/intelligence section.
Plans and coordinates staff supervision of plans, requirements, and battalion training program.
Plans and supervises communications support for the signal brigade plan.
Prepares signal plans to incorporate into the signal brigade plans and orders.
Coordinates with other headquarters staff sections regarding their communication needs.
Exercises staff supervision over radio communication activities.
Prepares signal plans, orders, and radio communication SOI items.
Coordinates frequency allocation assignment and use.
Reports and processes interface problems.
Manages force integration of information system resources.
Plans and coordinates with higher headquarters for information systems upgrade, replacement, elimination, and/or integration within units.
Plans AISs integration.
Provides staff supervision of analysis and software support and automated systems troubleshooting.
Manages and supervises ADP related areas.
Designs and develops command information systems.
Monitors unique “application program” development.
Supervises maintenance of tactical databases.
Plans newly assigned or attached unit database integration.
Provides automated resources security training.

Figure 3-10. Corps Area Signal Battalion Functions

3-12. The HHC of the corps area signal battalion consists of the battalion headquarters and a company headquarters (Figure 3-11). The battalion headquarters has a command section, an administrative section, a logistics section, an operations/intelligence section, a CE maintenance section, a motor maintenance section, and a unit ministry team. The operations/intelligence section coordinates the installation of NCs, LENs, SENs, and RAUs. The CE maintenance section performs DS maintenance of all organic CE and COMSEC equipment for the battalion. This section can send CE and COMSEC maintenance contact teams to repair faulty equipment at deployed sites.

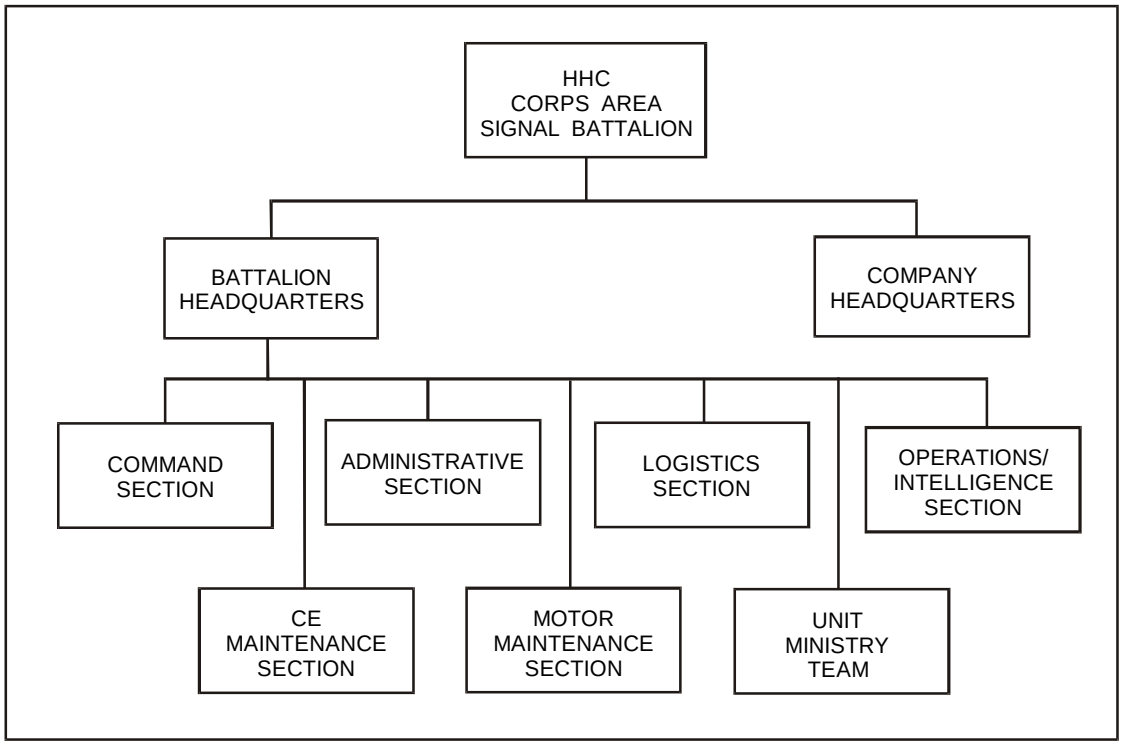

Figure 3-11. HHC Corps Area Signal Battalion

3-13. Each area signal company has a company headquarters and two nodal platoons (Figure 3-12). Each nodal platoon consists of a platoon headquarters, two NC sections, and two extension switch sections. The NC section installs, operates, and maintains the NCS, four LOS(V3)s, and a local RAU. The extension switch section deploys LOS assemblages to support the SENS(V1) and (V2) and the remote RAU.

3-14. Each area signal company and each support company has one military occupational specialty (MOS) 31F and one 31P, with a spares facility (AN/TSM-183), to perform on-site MSE nodal maintenance. These personnel were previously consolidated at the battalion HHC CE maintenance section.

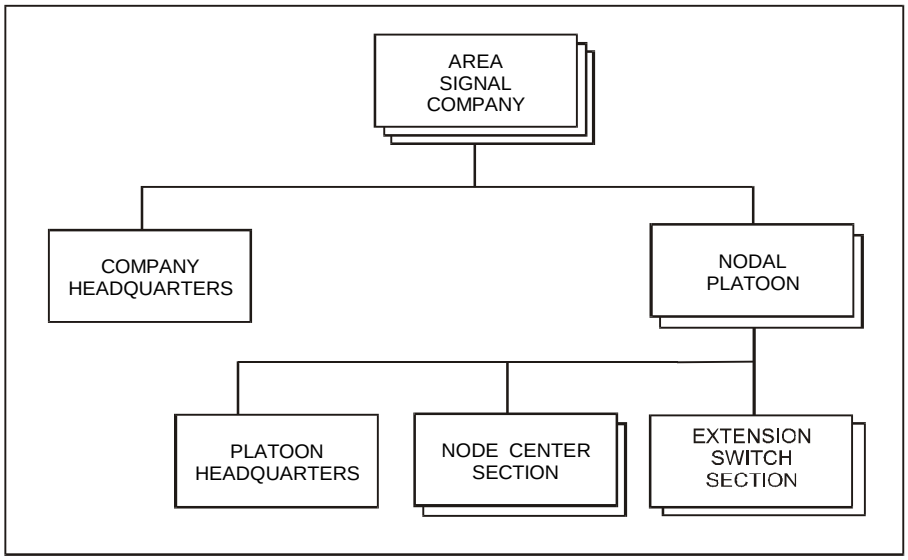

Figure 3-12. Area Signal Company

3-15. The typical signal support company (Figure 3-13) has a company headquarters, large extension switch platoon, and an extension switch support platoon. The large extension switch platoon has a platoon headquarters, a large extension switch section, and a cable/wire section. The extension switch support platoon has a platoon headquarters, an extension switch support section, and a cable/wire section. Signal support companies differ in the number of personnel and equipment they are authorized based on its mission.

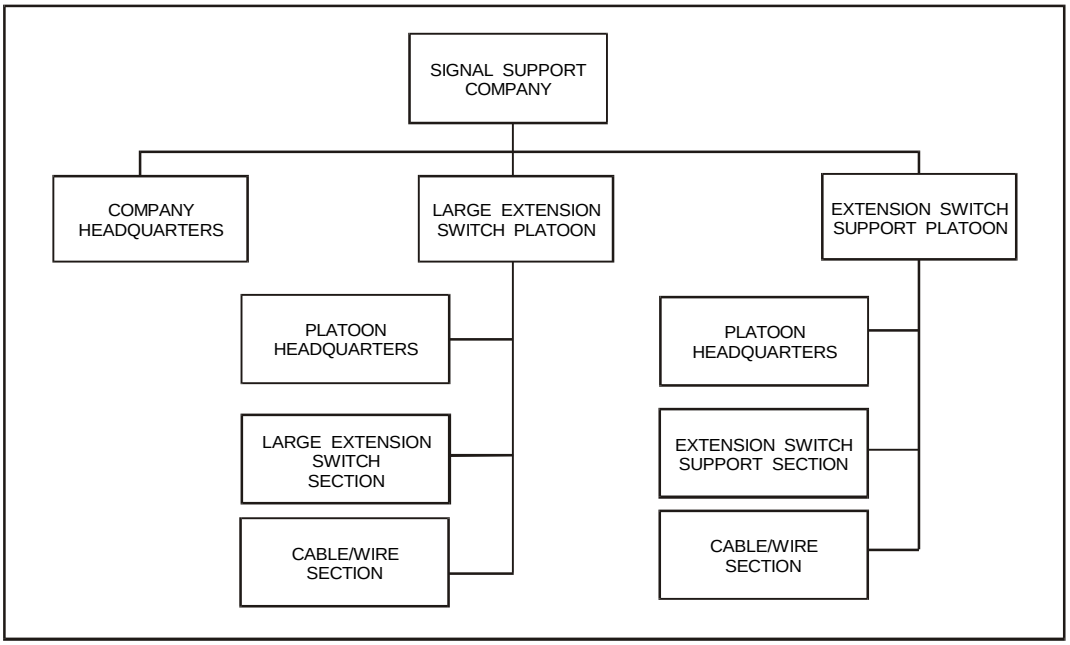

Figure 3-13. Corps Area Signal Battalion Signal Support Company

CORPS SUPPORT SIGNAL BATTALION

3-16. The corps signal brigade has a corps support signal battalion. It has an HHC, two area signal companies, and a signal support company (Figure 3-14). The corps support signal battalion provides communication support throughout the corps AO.

3-17. The airborne corps support signal battalion has one standard area company, one contingency area company, one TRI-TAC company, and one NC instead of a LEN in the support company.

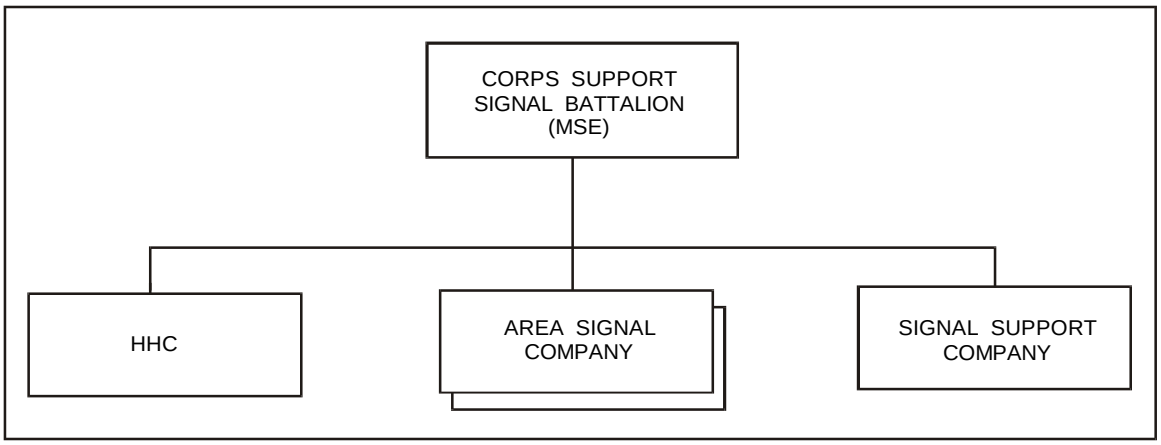

Figure 3-14. Corps Support Signal Battalion

3-18. The support signal battalion's HHC consists of a battalion headquarters and a company headquarters (Figure 3-15). The battalion headquarters consists of a command section, an administrative section, a logistics section, an operations/intelligence section, a CE maintenance section, a motor maintenance section, and a unit ministry team. The operations/intelligence staff section coordinates the installation of NCs, LENS, SENS, and RAUs. The CE maintenance section performs DS maintenance of all organic CE and COMSEC equipment for the battalion. This section can send CE and COMSEC maintenance contact teams to repair faulty equipment at deployed sites.

3-19. The signal support company has a large extension switch platoon, a company headquarters, and an extension switch support platoon (Figure 3-16). Each area signal company and each support company has one MOS 31F and one 31P, with a spares facility (AN/TSM-183), to perform on-site MSE nodal maintenance. These personnel were previously consolidated at the battalion HHC CE maintenance section. The structure and capabilities of these platoons are similar to those of the area signal battalion support company. The large extension switch platoon has a large extension switch section and two cable/wire sections. The extension switch support platoon has an extension switch support section and two cable/wire sections.

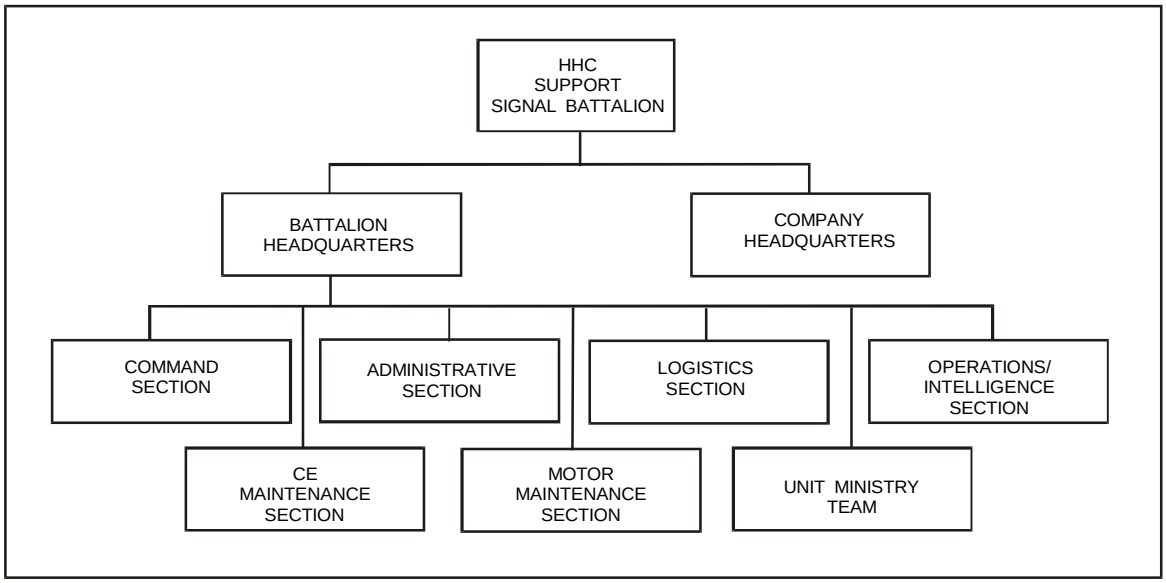

Figure 3-15. HHC Support Signal Battalion

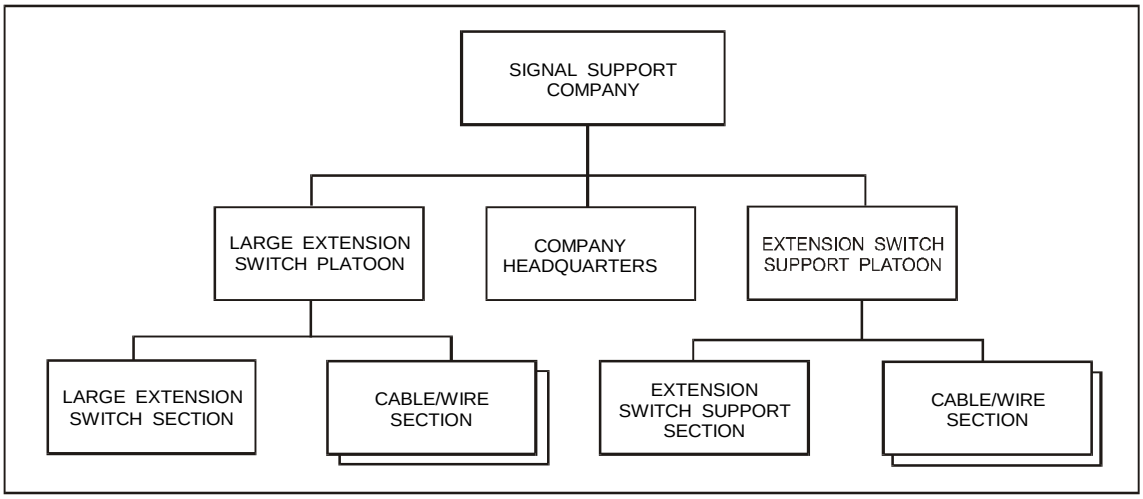

Figure 3-16. Signal Support Company, Corps Support Battalion

DIVISION SIGNAL BATTALION

3-20. The division signal battalion provides communication support to major subscribers, CPs, and operational facilities in heavy and light divisions. The battalion's structure is similar to a corps area signal battalion. The typical division signal battalion has an HHC, two area signal companies, and a signal support company (Figure 3-17).

Note: The heavy division has three area signal companies that are organized the same as in the corps signal brigade.

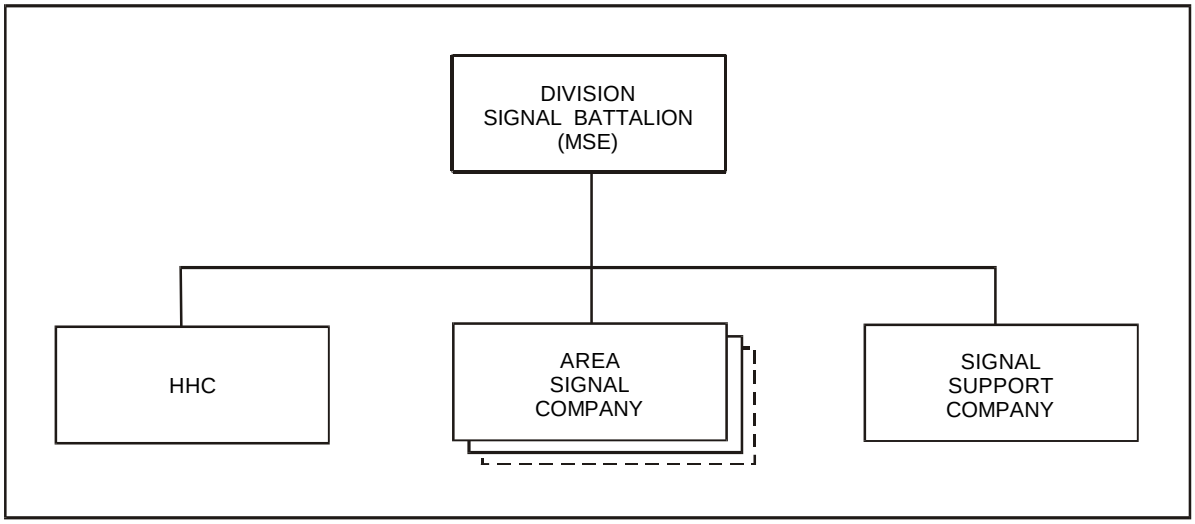

Figure 3-17. Division Signal Battalion

3-21. The division signal battalion's personnel and staff sections are similar to the corps. The G6 section and the operations/intelligence section ensure quality communications throughout the division. The division signal commander is designated as the G6 and is the principal advisor to the division commander for all division communications. The G6 serves in the dual role of commander of the signal battalion and as a member of the general staff. These two functional roles are separate but related.

3-22. As the signal battalion commander, the G6 commands, directs, and supervises the battalion's efforts to complete their assigned missions. As a member of the general staff, the G6 presents the communication aspects for tactical operations for all staff planning. The G6 consults directly with the Chief of Staff (CofS) on all communication matters.

3-23. The G6 performs management, operations, and maintenance of the commands communication and information systems using the SCC-2. This system assists the G6 and the deputy G6 in managing the division's communications systems by providing planning, management, and C2 of tactical communications networks. The deputy G6 and the COMSEC officer assist the G6 in these efforts. The deputy G6 locates at the division tactical signal office and represents the G6 in providing communications support to the division.

3-24. The G6 also conducts active liaison with the signal officers of higher headquarters, adjacent headquarters, and military intelligence (MI) battalion combat electronic warfare intelligence (CEWI) representatives.

3-25. The G6's staff ensures COMSEC complies with the current regulations, RF allocation and assignment, and division unit COMSEC logistics support. The signal battalion performs only COMSEC logistics support for the division.

3-26. The division signal battalion's staff sections implement communications planning and engineering, OPCON (in stand-alone mode), and administrative and logistics direction. The staff uses the tasking from the corps communications plan to develop the division network. When operating in the stand-alone mode, it develops its own communications plan. Active monitoring of the network's operational status ensures that it meets the corps' changing requirement and its own. This responsibility belongs to the operations/intelligence section.

3-27. The division COMSEC office of record (DCOR) is responsible for the division COMSEC account. It provides COMSEC logistics support for the control and distribution of internal division COMSEC material. The division signal battalion staff implements, manages, and maintains the division COMSEC keys for the division.

3-28. The HHC consists of a battalion headquarters and a company headquarters (Figure 3-18). The battalion headquarters has a command section, an administrative/logistics section, an operations/intelligence section, a division signal office, a motor maintenance section, a CE/COMSEC maintenance section, and a DCOR. The operations/intelligence section installs, operates, and maintains the division signal battalion's SCC-2. The division area signal company's structure, personnel, and equipment are the same as the corps area signal company. The CE maintenance section performs DS maintenance of all organic CE and COMSEC equipment for the battalion. This section can send CE and COMSEC maintenance contact teams to repair faulty equipment at deployed sites.

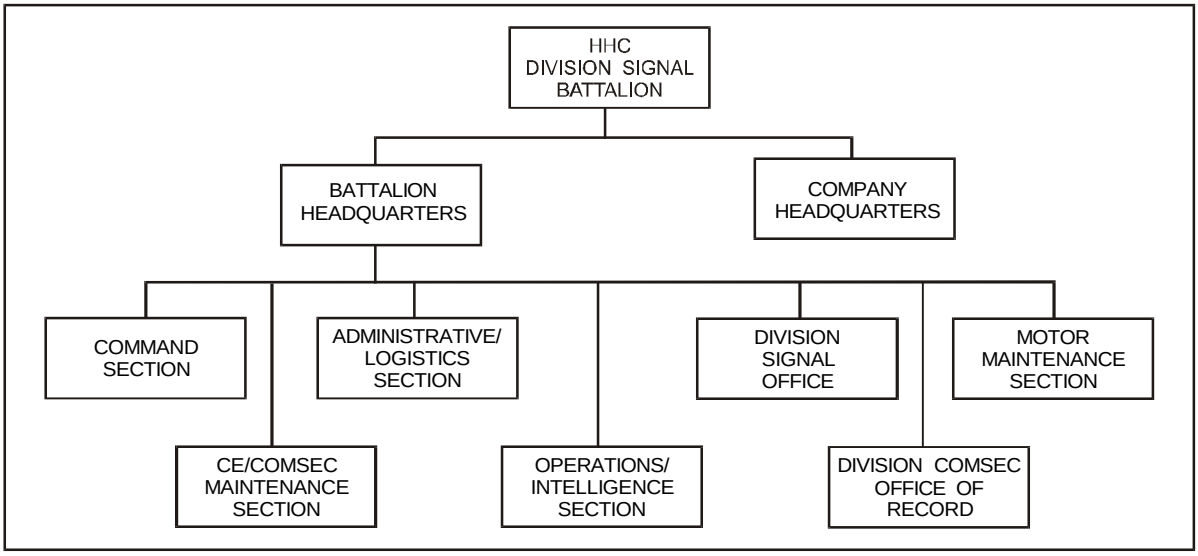

Figure 3-18. HHC Division Signal Battalion

3-29. The division signal support company has a company headquarters, an EPLRS platoon, a TACSAT platoon, and a general support platoon (Figure 3-19). It is similar to the corps area signal battalion's signal support company in mission. Each area signal company and each support company has one MOS 31F and one 31P, with a spares facility (AN/TSM-183), to perform on-site MSE nodal maintenance. These personnel were previously consolidated at the battalion HHC CE maintenance section. However, its organization and equipment are different. The EPLRS, TACSAT, and general support platoons are described below.

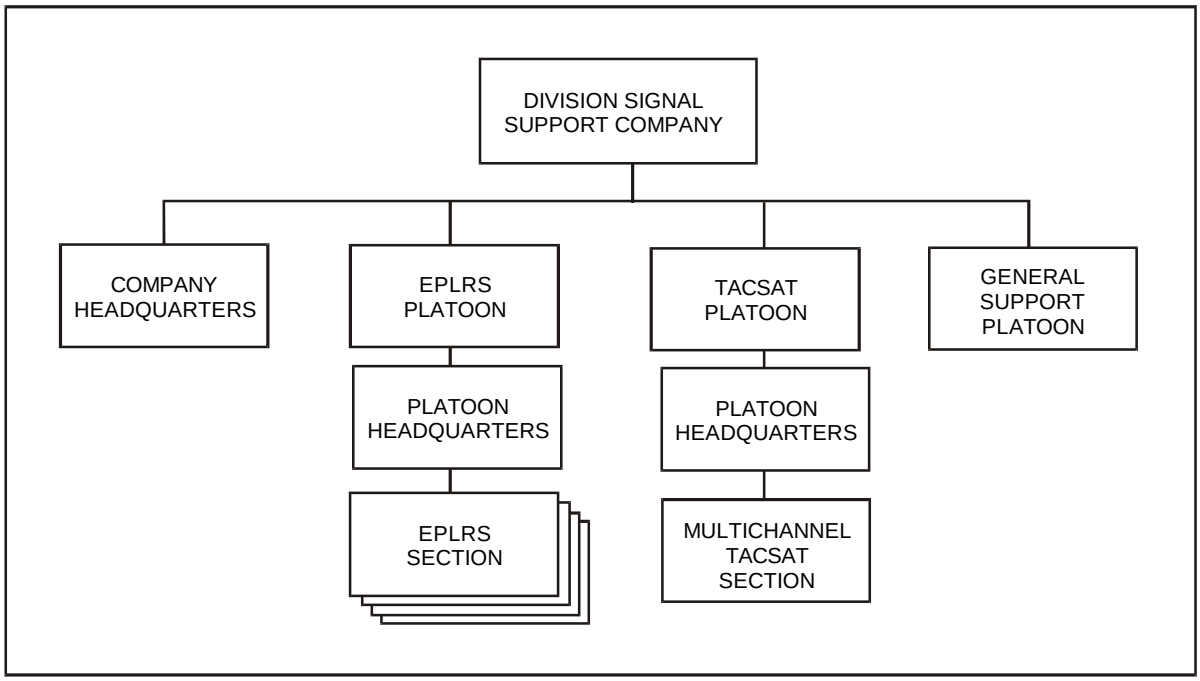

Figure 3-19. Division Signal Support Company

3-30. The EPLRS platoon includes a platoon headquarters and four EPLRS sections. EPLRS provides the capabilities needed to support the data distribution requirements of ABCS. It comprises the Army Data Distribution System (ADDS) that supports the ABCS components listed below.

- Air Missile Defense Planning and Control System (AMDPCS).
- Maneuver Control System (MCS).
- Advanced Field Artillery Tactical Data System (AFATDS).
- All Source Analysis System (ASAS).
- Combat Service Support Control System (CSSCS).
- Force XXI Battle Command - Brigade and Below (FBCB2).

3-31. The TACSAT platoon includes a platoon headquarters and a multichannel TACSAT section. The multichannel TACSAT extends the distance of the ACUS by using strategic and tactical terminals for transmitting multiplexed voice and data channels.

3-32. The typical general support platoon consists of a platoon headquarters, an extension switch section, a wire section, and an FM retransmission section (Figure 3-20). The wire section installs and maintains the RMC TD-1234, CX-11230A/G and CX-4566 26-pair cables, J-1077 distribution boxes, WF-16, and local telephones. The FM retransmission section has three teams that provide single-channel retransmission stations for division level FM voice nets.

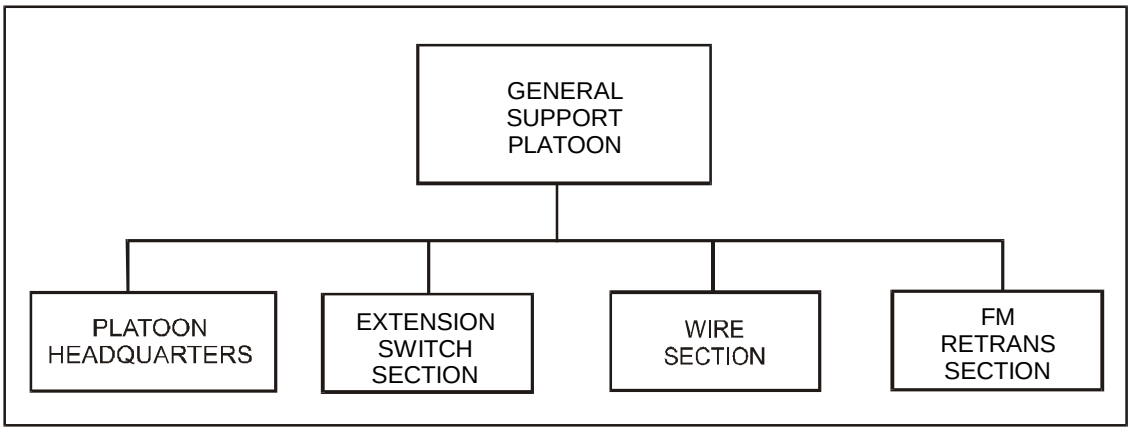

Figure 3-20. General Support Platoon

MSE EMPLOYMENT CHARACTERISTICS

3-33. NCs are the hubs of the MSE network providing internodal connectivity (Figure 3-21). The NCS is the main element of the NC. It provides network access to local and mobile subscribers through the RAU. Local subscribers consist of node and network management personnel. The NCS provides network access for LENS and SENS. At least two internodal links are made when providing a gateway between an adjacent MSE network or to the EAC network. Division establishes at least one link to adjacent division(s). NC deployment is based on serviced CP deployment, topographical considerations, LOS requirements, and network interconnectivity requirements.

3-34. Rapid initial network deployment requires installing a preprogrammed backbone system. The S3/SYSCON uses the information provided by the deputy G6 to plan the backbone system. The designated area signal companies provide the assets to install, operate, and maintain the NCs. In the initial network, each NC must connect to at least three other NCs. As the network matures, each NC should connect to three or four other NCs to ensure optimum service and survivability.

3-35. The LENS serves 164 wire subscribers: 84 through local J-1077s and 80 through RMCs. The RMCs can be set out alone or two can link in series using CX-11230A/G cable. They provide access for up to eight wire line subscribers each. If the user unit requires access for more than eight subscribers, the RMCs are used in a paired configuration. Units that are next to each other and have eight or fewer subscribers use one RMC and CX-11230A/G cable each. The LENS can terminate up to five RMC groups of two.

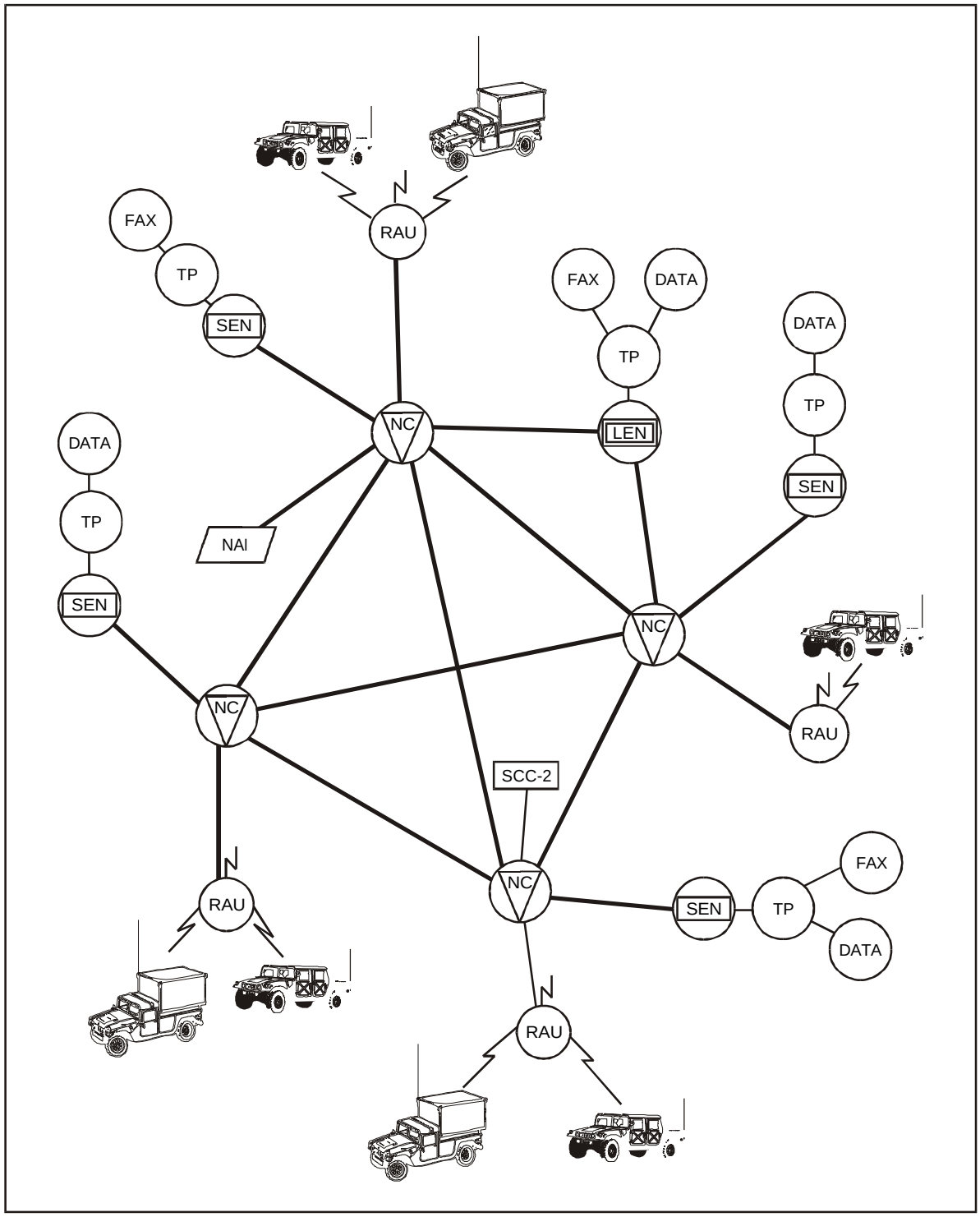

Figure 3-21. Internodal Connectivity

3-36. The SEN or LEN can service CNR customers via a SDNRIU, TSEC/KY-90 (Figure 3-22). After the operator completes the connection, the SDNRIU functions automatically. Distribution of the TSEC/KY-90 is one per NC platoon in each of the area signal companies.

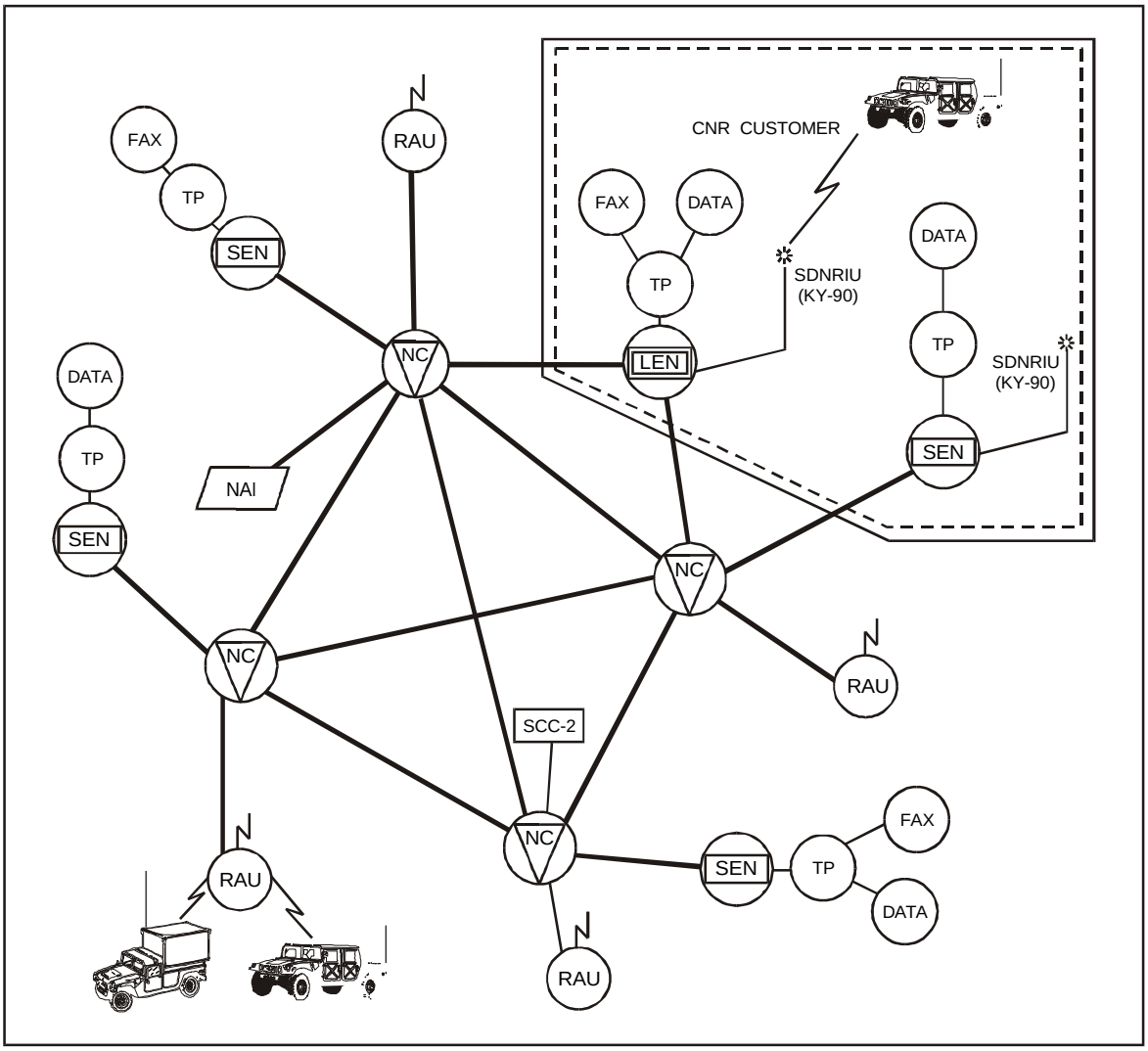

Figure 3-22. CNR Interface with MSE

3-37. RAUs are used in local and remote configurations. However, it does not mean both RAUs cannot be remoted; it depends on the availability of an LOS assemblage. Because RAUs constantly emit marker beacons declaring availability to affiliated MSRTs, those RAUs closest to the forward edge of the battle area (FEBA) must use electronic protection (EP) techniques to mask the emitter from the opposing force.

3-38. Deployment of the LOS assemblages must be considered to minimize the radio signature of the node. As an internodal link, the LOS(V3) can deploy on hills up to 400 meters from the node via CX-11230A/G cable. If the distance exceeds 400 meters, the SHF radio link can be used up to 10 kilometers (6.2 miles) (see Figure 3-23). SHF radio distribution to the NCs and LOS assemblages allows for remoting 50 percent of the radio links.

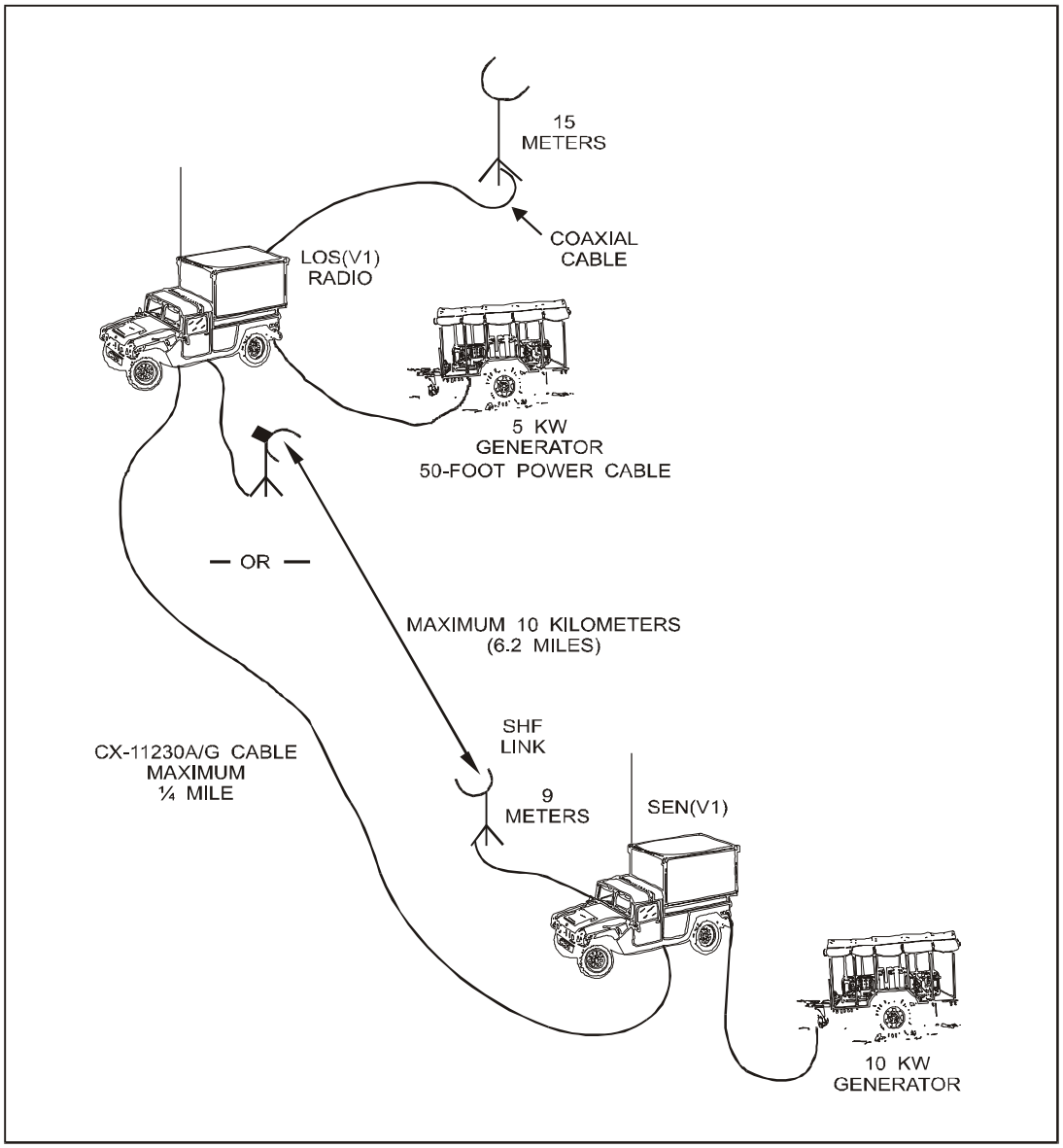

Figure 3-23. SHF Radio Link

3-39. The LOS(V2) supports the NATO analog interface (NAI) unit during combined operations (Figure 3-24). The LOS(V2) does not have SHF radio capability. The NAI locates at selected NCSs throughout the corps (Figure 3-25).

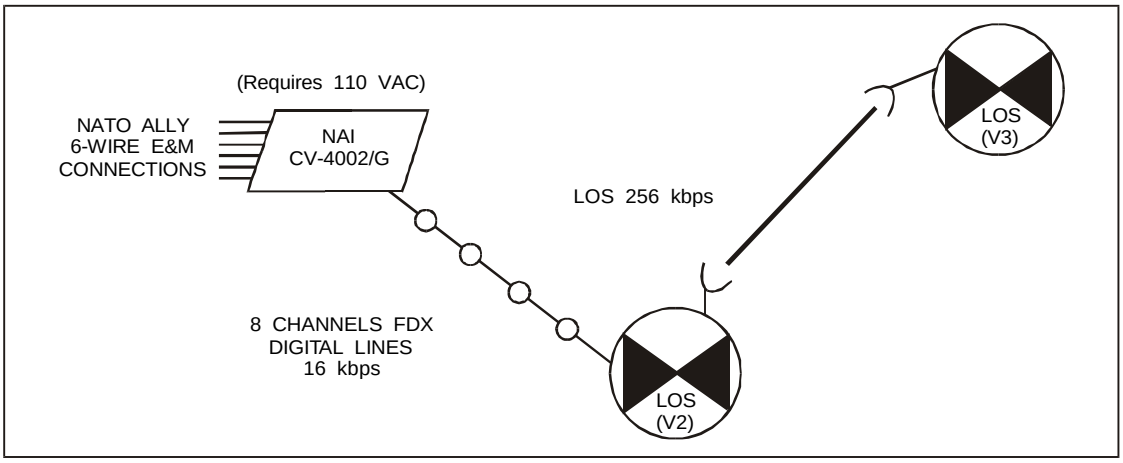

Figure 3-24. NATO/MSE Interface using LOS(V2)

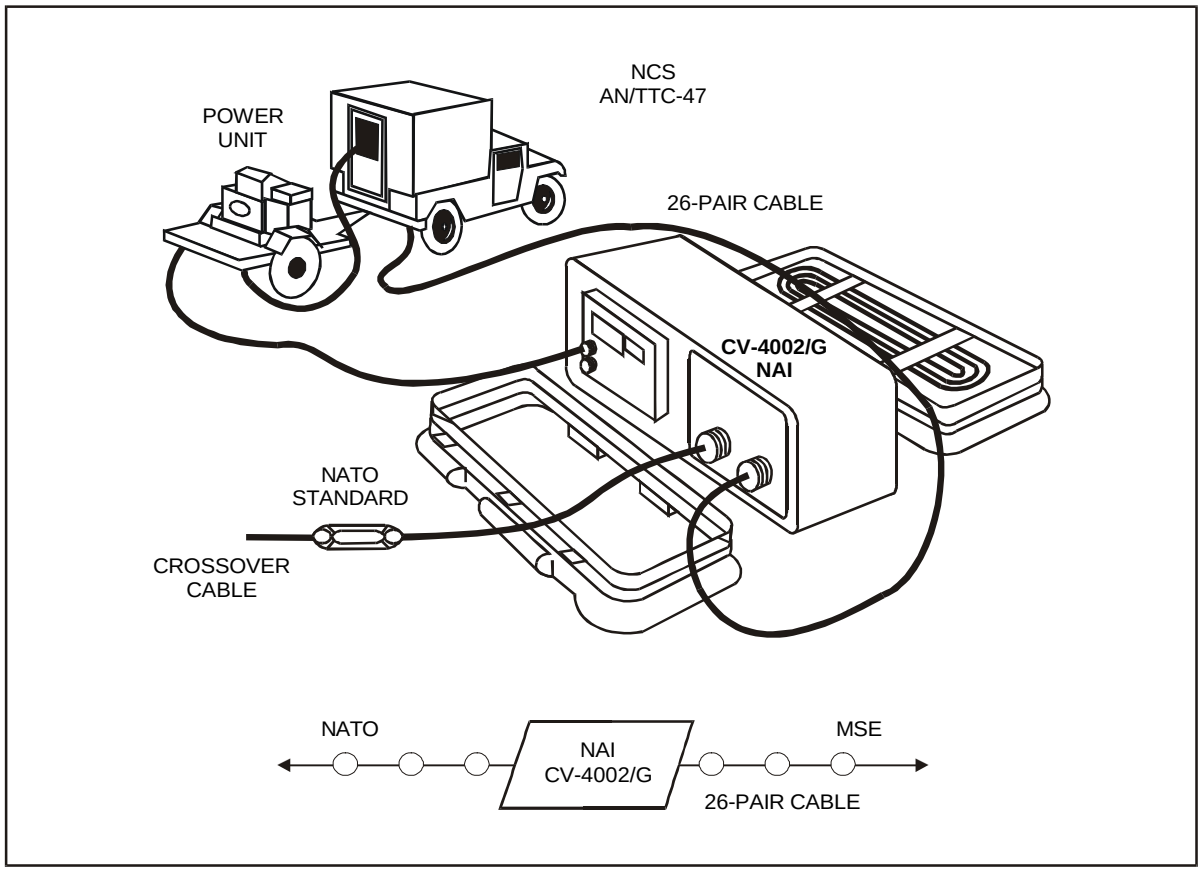

Figure 3-25. NAI Deployment at an NCS

3-40. MSE network users gain mobile access using MSRTs. Figure 3-26 shows how the MSRT (AN/VRC-97) accesses the system through the RAU. MSRTs can receive or send voice, facsimile, or data traffic. When a RAU is deploying, it behaves like a mobile subscriber. The crew can place the DSVT (TSEC/KY-68) in the cab of the vehicle, configure one of its eight radios as an MSRT, and access another RAU.

SYSTEM CONTROL

3-41. The corps and division signal battalions deploy their MSE signal assets under the overall direction of the corps signal brigade. However, operational requirements may dictate an OPCON relationship between division signal battalion MSE assets and corps/division assets.

3-42. The corps signal brigade manages and controls the corps MSE network using the corps SCC-2. Within a corps MSE network, an active SCC-2 and a standby SCC-2 are netted for primary/regulatory network databases, displays, and processing services. This ensures continuity of operations. The active SCC-2 performs all automated network planning, management, and control for the corps. When in a corps network, the division SCC-2 functions in an active role but remains under the TECHCON of the corps'active SCC-2.

3-43. The corps signal brigade and the division signal battalion coordinate closely when moving and placing NCs. The respective division and corps signal battalion commanders are responsible for moving these assets. The corps signal brigade is responsible for maintaining network integrity, coverage, and service. The brigade accomplishes this by reallocating nodes, trunks, extension assets, and area responsibilities. In a division stand-alone configuration, the division SCC-2 assumes these functions and appoints responsibility for the division network elements.

3-44. Initial MPM is exercised through CNR nets. MPM decreases threat radio electronic combat (REC) vulnerability.

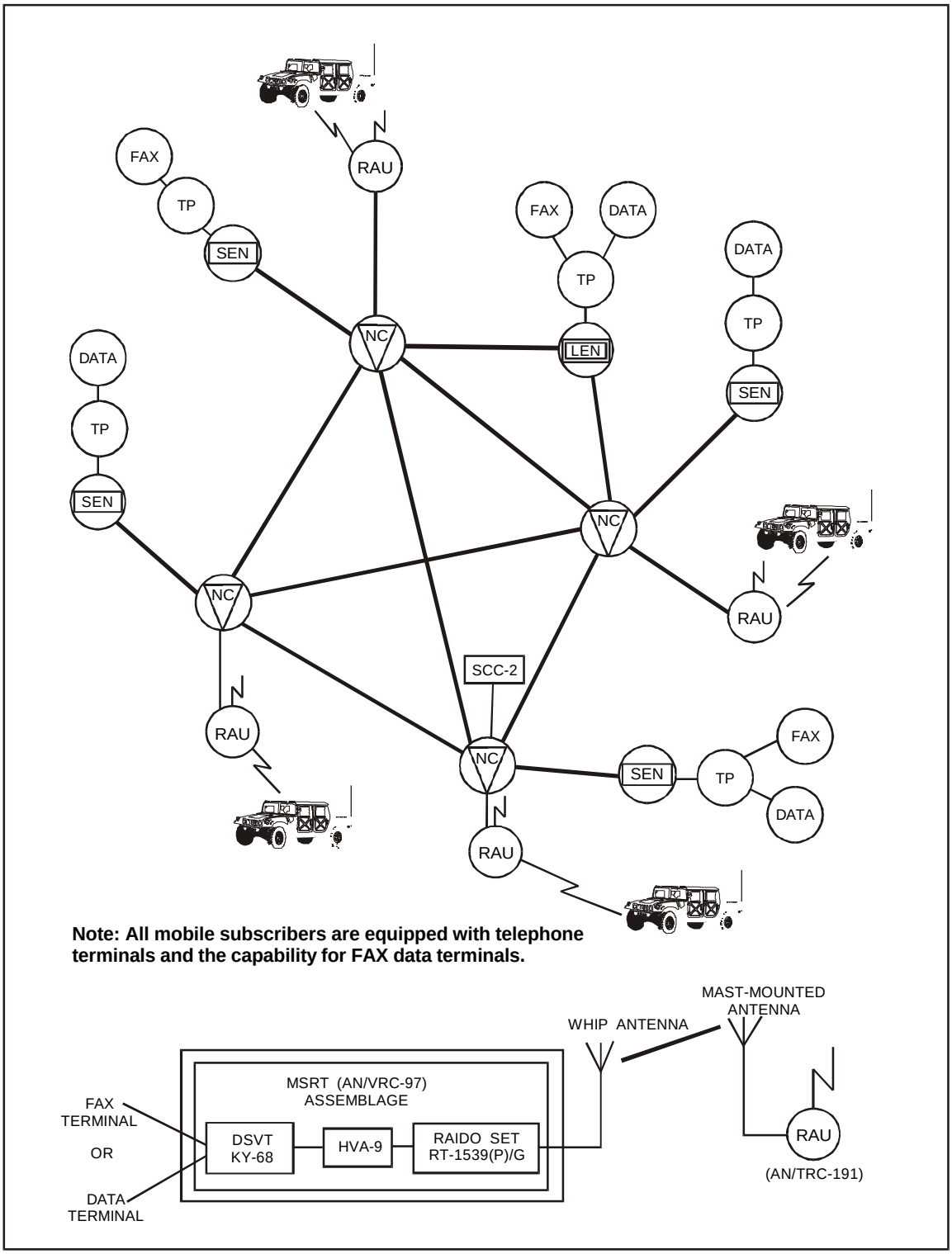

Figure 3-26. Mobile Subscriber Interface

Chapter 4

Operational Deployment

This chapter describes the phased deployment process for the MSE network. Signal support elements are located throughout the battlefield in a typical corps AO. Since MSE provides an integrated ACUS with no artificial boundaries, MSE deployment requires carefully coordinated procedures throughout the supported battlefield.

DEPLOYMENT

4-1. The base requirement for establishing and controlling communications remains from higher to lower, left to right, supporting to supported, and reinforcing to reinforced. The element in the higher, left, or supporting category coordinates frequency plans, COMSEC keys, software, and edition and control mechanisms.

4-2. Corps signal elements may be scattered throughout the division area. Divisions will support other divisions; thus, signal unit areas will become interlocked and interconnected. Basic responsibilities of corps signal elements are covered below.

4-3. The corps G6, as a staff planner, plans for adequate and continuous area coverage throughout the corps area. In the division area, the organic four or six nodes often require augmentation. The corps G6 provides the assets needed to ensure area coverage. Normally, this requires two nodes. Allocation to the division depends on corps wide commitments. The division signal officer employs his assets to support the C2 needs of the division. He has direct control of overall network assets and planning within the division switching control group (SCG). The corps SYSCON provides centralized control of the MSE network and is responsible for its effective installation and operation. The division SYSCON works closely with the corps SYSCON to provide effective TECHCON.

4-4. Each MSE NC connects to at least three other NCs. An internodal link is a link established between two NCs or between an NC and an LEN.

4-5. Each MSE corps network needs at least two gateway connections to the EAC communications network. There should be at least one link between adjacent divisions and one between adjacent corps. The physical link connections are independent of the physical boundaries between adjacent units or echelons. Gateways are based on electronic boundaries.

4-6. The SCGs and the node switching groups (NSGs) define areas of responsibility within the integrated corps network. SCGs are based on the technical span of control of a corps or division SCC-2. In a corps network, each division SCC-2 controls the planning, engineering, and executing all signal support requirements and assets within the division SCG. The corps SCC-2 provides TECHCON for the integrated corps network while assisting the divisions, as required.

4-7. An NSG consists of an NC or LENs with a signal battalion responsible for each. The NSGs provide a hierarchy of NC and LEN switches regarding the management of COMSEC keys. The corps area signal battalion and the division signal battalion provide all command, administrative, and logistical support for the signal teams within their areas of control. Figure 4-1 shows the area signal battalion and the division signal battalion NSGs and SCGs.

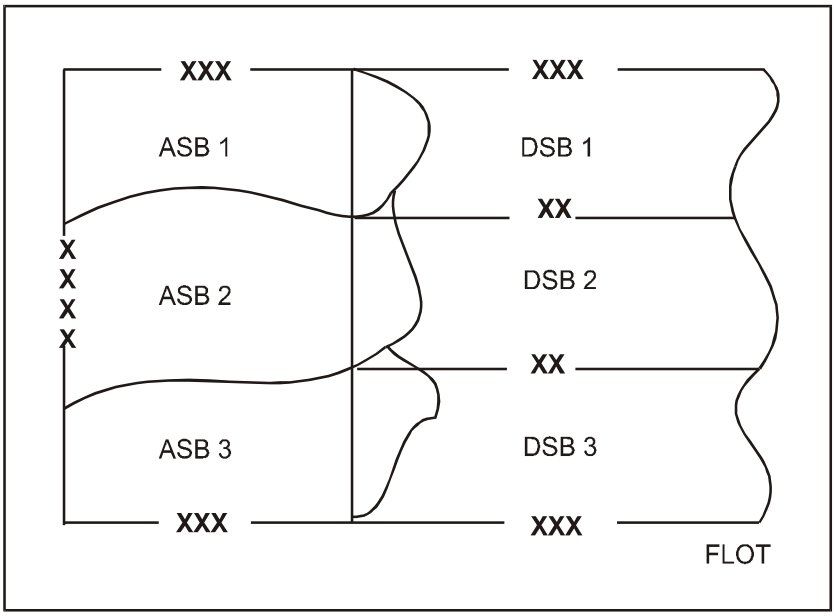

Figure 4-1. The Corps Area and Division Signal Battalions

4-8. Corps and division signal battalions provide service to subscribers in their assigned areas. Deploying node and extension assets provide this service. Within the corps, the CPs controlling close, deep, and rear operations may be provided with dual network connectivity. Normally, this requires assigning multiple extension assets to the division main CPs, the division tactical CP, the corps main CPs, and the corps tactical CP. MSRT, SEN, or LEN access provides all other CPs dual connectivity. Extension nodes and CPs are encouraged to establish and maintain a habitual relationship. This can occur within the division and corps units like ACRs, field artillery (FA) brigades, and ADA brigades.

4-9. SYSCON exercises network management and control. In the corps network, at the corps echelon, SYSCON designates an active and a standby SCC-2. In a stand-alone division network, the single organic SCC-2 within SYSCON assumes the active role.

4-10. The active SCC-2 manages the planning, engineering, and control functions for a corps. Netting the standby corps SCC-2 and the division SCC-2s technically support this. Each is subordinate to the active corps SCC-2.

4-11. In a corps network, at least two SCC-2s must simultaneously have the primary network databases, displays, and processing services. Although one SCC-2 actively manages the network, the standby SCC-2 can assume the active SCC-2's role at anytime. As the NCSs or LENSs update the active SCC-2, the standby SCC-2's database updates automatically. For the standby SCC-2 to assume the active role, it should be involved in the physical planning and monitoring of the network. In this way, the standby SCC-2 understands and can execute the commander's intent when it becomes active. SCC-2 teams should rehearse network control transfer often to keep the teams proficient.

PHASED DEPLOYMENT

4-12. MSE deployment requires carefully coordinated procedures throughout the corps. The MSE deployment procedures consist of four main phases, which are broken down into subphases.

4-13. Predeployment (Phase I) includes the following subphases–

- User requirements.
- Interfaces.
- RAU/MSRT deployment plan.
- Other system considerations.
- Team packets.
- COMSEC.
- OPORD.
- Site reconnaissance.
- Database modifications.

4-14. Installing the backbone (Phase II) includes the following subphases–

- NC to NC connectivity.
- NC to LEN connectivity.
- Duplication and bypass.
- Bulk transfer (COMSEC).
- Database modification (as required).

4-15. Installing extensions (Phase III) includes the following subphases–

- SCC-2.
- RAU (local and remote).
- SEN.

4-16. Operational management (Phase IV) includes the following subphases–

- COMSEC.
- Subscribers.

- Frequencies.
- Switch database management.
- Teams and equipment.

4-17. Figure 4-2 shows the MSE predeployment planning flow in a corps scenario.

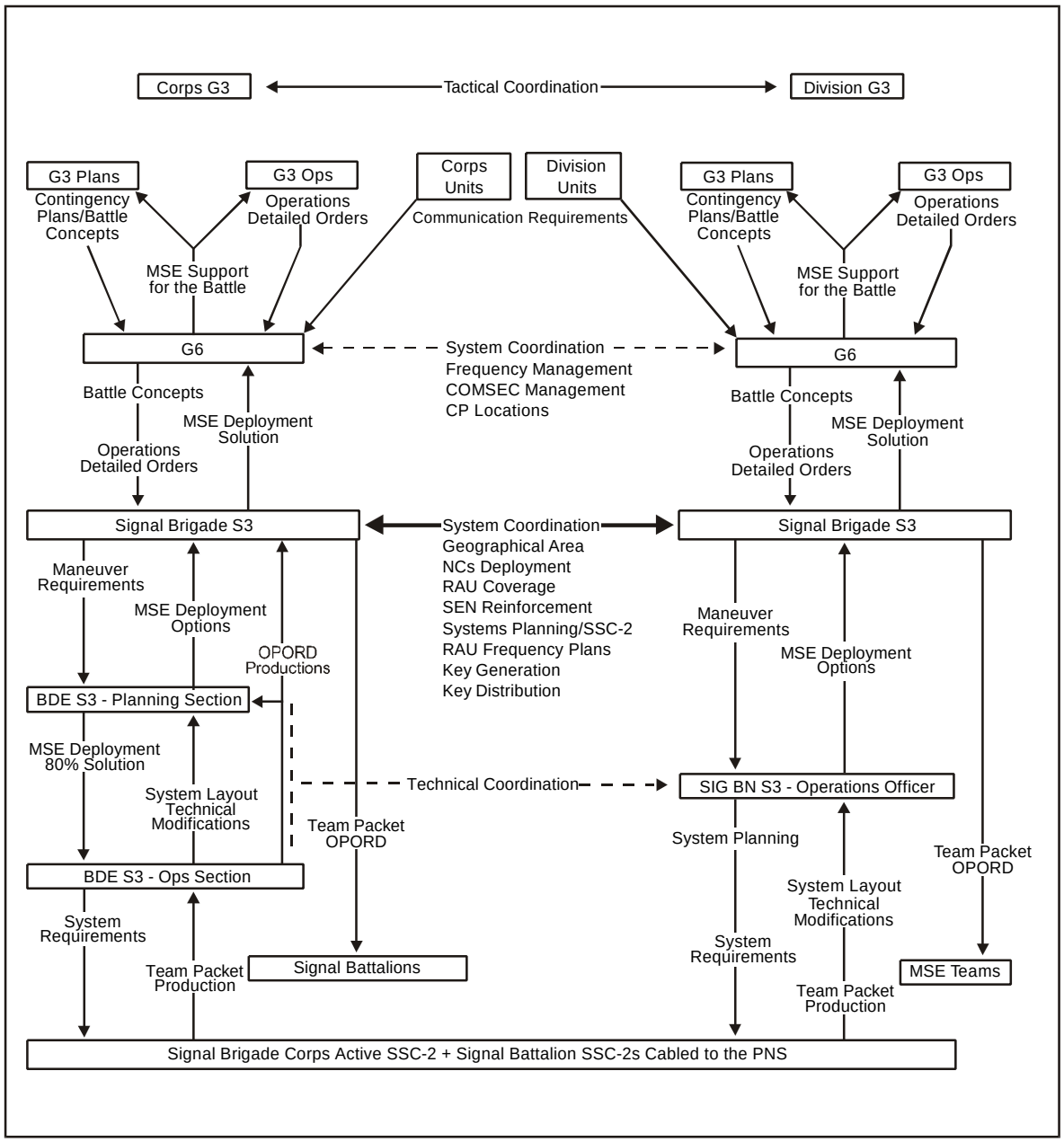

Figure 4-2. MSE Predeployment Planning Flow in a Corps Scenario

PREDEPLOYMENT (PHASE I)

4-18. During predeployment, the G3 planners assess the tactical situation, mission, and commander's intent and develop this information into an overlay. The overlay contains corps and division boundaries, maneuver units down to battalion level, and dispersed support units down to platoon level. The G3 planners use this overlay to assign equipment and to support the predeployment subphases.

USER REQUIREMENTS

4-19. The MSE users identify their address basic and special communications support requirements initially as a basis for further planning and execution.

4-20. The G6 planners, based on command guidance and in conjunction with SYSCON, determine which headquarters will receive support. This determines the method or type of signal support used to satisfy command, control, and communications (C3) requirements. These requirements include connectivity with adjacent units, EAC, and host nation's communications resources.

4-21. The SYSCON establishes and publishes communications priorities in the OPORD or unit SOP. Installing the backbone has top priority. Once the backbone has good connectivity, local and remote RAUs are then connected followed by the major headquarters. Examples are the corps main CP, the corps tactical CP, the division main CP, and the division tactical CP. Only SYSCON can direct deviating from the assigned priorities.

4-22. The G6 planners need the initial locations of all units requiring support and, if possible, any planned jump locations. They also need to know all special requirements of the supported units, such as commercial access, TACSAT, CNR, and preaffiliation list (PAL) numbers.

4-23. SYSCON ensures that backbone priorities are established for each NC. SYSCON ensures an NC establishes priority links one at a time. Figure 4-3 shows an example of a priority listing.

INTERFACES

4-24. The MSE system can connect with a variety of non-MSE hardware. Connections are interfaces that require changes to the standard database. MSE has internal and external interfaces and both have special considerations. The network planner determines the requirements for database changes to the units involved in the interface. Normally, this occurs at the signal technical conference before deployment. Habitual relationships may result in the need to establish standard procedures to change the database.

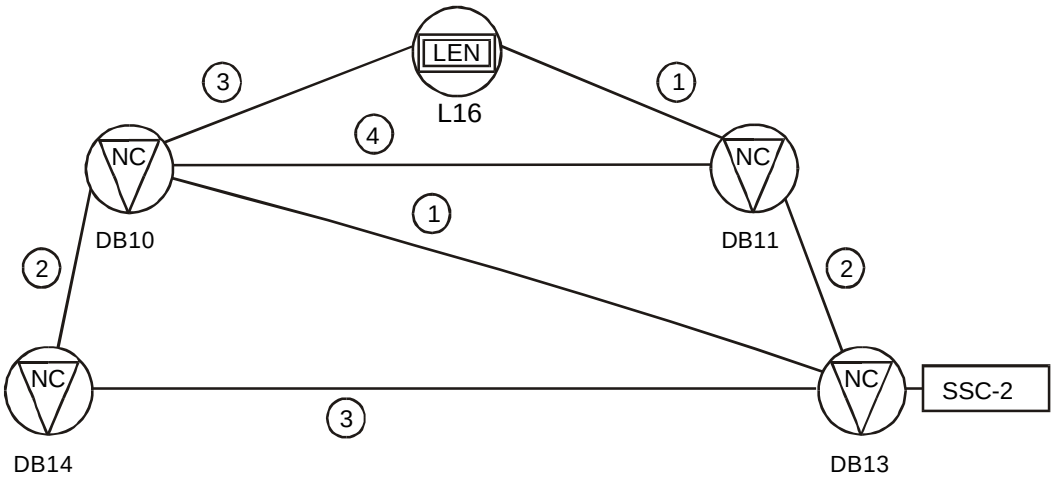

HOURS

NC/ TIME	1000	1100	1200	1300	1400	1500
DB10	1310	1014	10L16	1011		
DB11	11L16	1311	——	1011		
DB13	1310	1311	1314	——		
DB14	——	1014	1314	——		
L16	11L16	——	10L16	——		

Figure 4-3. Priority Listing

4-25. Internal interfaces are simply interfaces with non-MSE communications assets within MSE networks. Examples are combat net radio interface (CNRI), commercial access, message switch (MS), and TACSAT as a transmission means. The network planner considers the requirements for interfaces and plans accordingly. Some critical planning factors for internal interfaces are covered below.

- Due to the wide dispersion of users and scarcity of equipment, carefully plot CNRI locations.
- Plot commercial access locations to ensure accessibility to the SEN and LEN for authorized user access. Time is required for coordination and reconnaissance.

4-26. The corps signal brigade determines MS locations to ensure support for communications terminals throughout the corps.

4-27. The corps signal brigade coordinates TACSAT support for all requirements. Data rates and multiplex digital transmission group (MDTG) and digital transmission group (DTG) terminations must be determined to leave NCs with maximum flexibility.

4-28. External interfaces are links between MSE and other various echelons and organizations such as EAC, joint services, or allies. External interfaces require detailed planning and coordination. Examples of these interfaces are with EAC and joint services through the IATACS, tropo, TACSAT, Integrated Digital Network Exchange (IDNX), and NATO. Critical planning issues are covered below.

4-29. TACSAT planning includes–

- Date and time the satellite is available to support the mission from the approved satellite access request (SAR).
- Type of satellite terminals used in the link and point-to-point or hub-spoke relationship.
- Type of link (MSE, TRI-TAC, and ABCS), terminating equipment or switches, group data rates, and any database changes.
- Coordination for COMSEC keys.
- Use of the NCS and LENS, which have very stable automatic timing sources and should normally be designated as master when master/slave relationships are required.

4-30. Tropo planning at EAC includes–

- Type of link (MSE, TRI-TAC), terminating equipment or switches, group data rates, cable modulation, and any required database changes.
- Coordinating trunk encryption device (TED) keys, common interswitch rekey (CIRK), and area interswitch rekey (AIRK) for MSE or TRI-TAC/EAC links.
- Locating each terminal, propagation mode (LOS, diffraction, tropo), transmit and receive frequencies, bandwidth (3 or 7 MHz), antenna azimuth, and horizon angle.
- Use of the AN/TRC-170 (tropo) that does not require timing from a slave source and normally acts as the master.

4-31. Internal and external interfaces require close coordination between gateways. This ensures signal timing relationships, DTG numbering and channel assignments, digital editing, and COMSEC exchange for successful switch interface. (See Appendix C for detailed discussion of COMSEC operations.)

Note: Other considerations for links into other echelons are physical location of both terminals and frequencies. Make every effort to provide maximum flexibility for both ends of the system. There is no substitute for close coordination.

RAU/MSRT DEPLOYMENT PLAN

4-32. The RAU network provides system access to mobile subscribers in planned corridors or areas. MSRT density is greatest along main routes of march and around CP locations down to the maneuver battalion CP level. If there is not enough equipment to cover 100 percent of the battlefield, holes in coverage may occur where there are few or no subscribers. The RAU planning factor is 20 to 25 MSRTs per RAU. The procedures discussed below support RAU/MSRT deployment.

- Before deployment, the SCC-2/NPT generates the frequency plan and transmits it to one or several RAUs for distribution. The NPT is used only as a backup.
- The SCC-2 can generate up to 16 different plans (00-15). Only four plans are downloaded to the RAUs and MSRTs, and only one plan is in effect at any given time. Of the four plans downloaded, one plan is active, one is preactive, and the last two are in reserve.
- The RAUs with the downloaded frequency plans are then positioned to serve as filling stations to download frequency plans directly to MSRTs via frequency fill cables provided with each MSRT.
- The S6 is responsible for downloading the frequency plans to their units' MSRTs.
- SYSCON turns on the RAU's marker beacon that identifies the RAU and provides affiliation instructions after deployment. The RAU's marker beacon is turned off if the NCS or RAU's extension link fails. This allows the MSRTs affiliated off the RAU to automatically reaffiliate with an operational RAU. If the NCS or LENS fails, the MSRT user must reaffiliate.

OTHER SYSTEM CONSIDERATIONS

4-33. The present NCS software has a standard database. This database determines the allocation of the DTGs at the NCS. Assigning DTGs is the basis for planning the NC site layout for cabling and antenna configurations as shown in Figure 4-4.

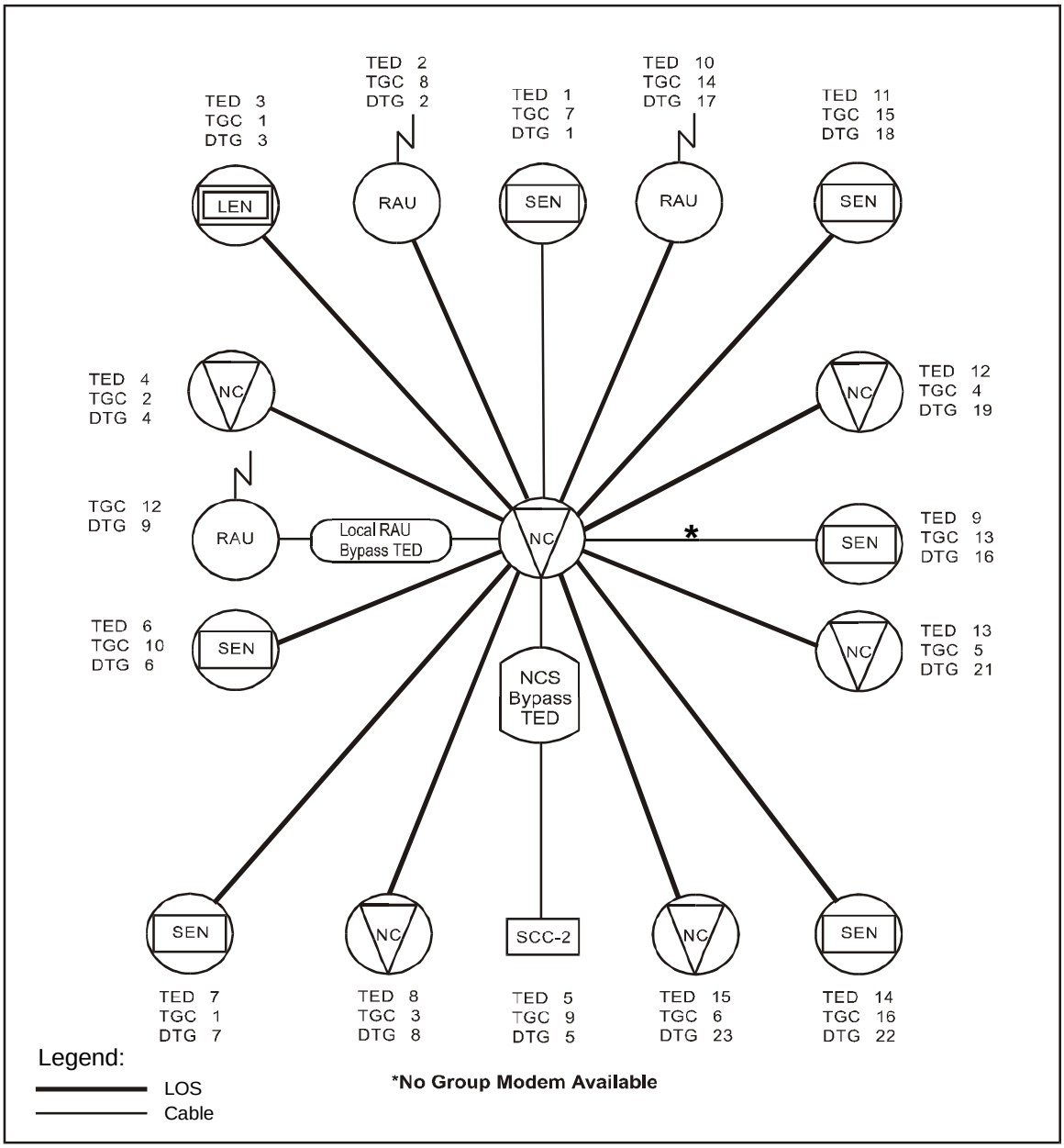

Figure 4-4. NCS DTG/Trunk Group Cluster (TGC) Standard Database

4-34. The configuration also defines the assignment of the nine channel multiplex-demultiplex (NCMD) chips. The NCMD assignment determines the number of channels in each TGC. This assignment can be altered within limits to meet operational requirements. The NCS operator's manual and the switch initialization procedures define the limitations. Database changes should be the exception not the rule, because changes can cause control and troubleshooting confusion. (See Table 4-1.)

Table 4-1. NCMD Chips

MDTG 25			
TDSGM Location	**NCMD**	**DTG**	**TGC**
1	9 & 10	1[1]	7
1	5 & 6	2	8
1	19 - 22	3	1
1	27 - 34	4	2
MDTG 26			
TDSGM Location	**NCMD**	**DTG**	**TGC**
1	23 & 24	5[1]	9
1	35 & 36	6	10
1	7 & 8	7	11
1	11 - 18	8	3
MDTG 27			
TDSGM Location	**NCMD**	**DTG**	**TGC**
2	9 & 10	16[1]	13
2	5 & 6	17	14
2	19 & 20	18	15
2	21 - 28	19	4
MDTG 28			
TDSGM Location	**NCMD**	**DTG**	**TGC**
2	29 - 36	21	5
2	7 & 8	22	16
2	11 - 18	23	6
1	25 & 26	9	12[2]

[1]The low-speed DTG switches permit these DTGs to bypass the MDTG.

[2]Nonencrypted. Used for the local RAU. Not part of an MDTG.

4-35. Complete all possible database modifications before deployment. The large-switch operator can store up to ten database modifications on the Litton disk drive. When modifying a database, always go from like data rate DTGs such as SEN to RAU, or RAU to SEN, or higher to lower if possible.

4-36. The SYSCON staff and the NC officer in charge (OIC)/ noncommissioned officer in charge (NCOIC) use the DTG/TGC planning diagram (Figure 4-5) and the NCS equipment assignment diagram (Figure 4-6) to set up site layouts. Each node manager prepares this diagram. The SYSCON staff resolves any conflict.

SITE LAYOUT DIAGRAM

NC:	COORD:	DATE:
EXERCISE:	LOCATION:	

LOS-V3	DTG NCS-LOS-V3	LINK	BAND		POL / AZ	XMT	RCV	TIME / PRIORITY	DISTANT END CALL SIGN/ PHONE#	NOTES:
MDTG#25	(SEN)-DTG#1 = DTG#1*		SHF							
LOS#	(RAU)-DTG#2 = DTG#2		I							
TEAM	(LEN)-DTG#3 = DTG#3		III							
PH:	(NCS)-DTG#4 = DTG#4		I / III							
MDTG#26	(NMT)-DTG#5 = DTG#1*		SHF							
LOS#	(SEN)-DTG#6 = DTG#2		I							
TEAM	(SEN)-DTG#7 = DTG#3		III							
PH:	(NCS)-DTG#8 = DTG#4		I / III							
MDTG#27	(SEN)-DTG#16 = DTG#1*		SHF							
LOS#	(RAU)-DTG#17 = DTG#2		I							
TEAM	(SEN)-DTG#18 = DTG#3		III							
PH:	(NCS)-DTG#19 = DTG#4		I / III							
MDTG#28	= DTG#1									
LOS#	(NCS)-DTG#21 = DTG#2		I							
TEAM	(SEN)-DTG#22 = DTG#3		III							
PH:	(NCS)-DTG#23 = DTG#4		I / III							
LOCAL RAU	(RAU)-DTG#9									

ADDITIONAL NOTES AND REMARKS: _____

* Normally Directly Cabled

Figure 4-5. Site Layout Diagram

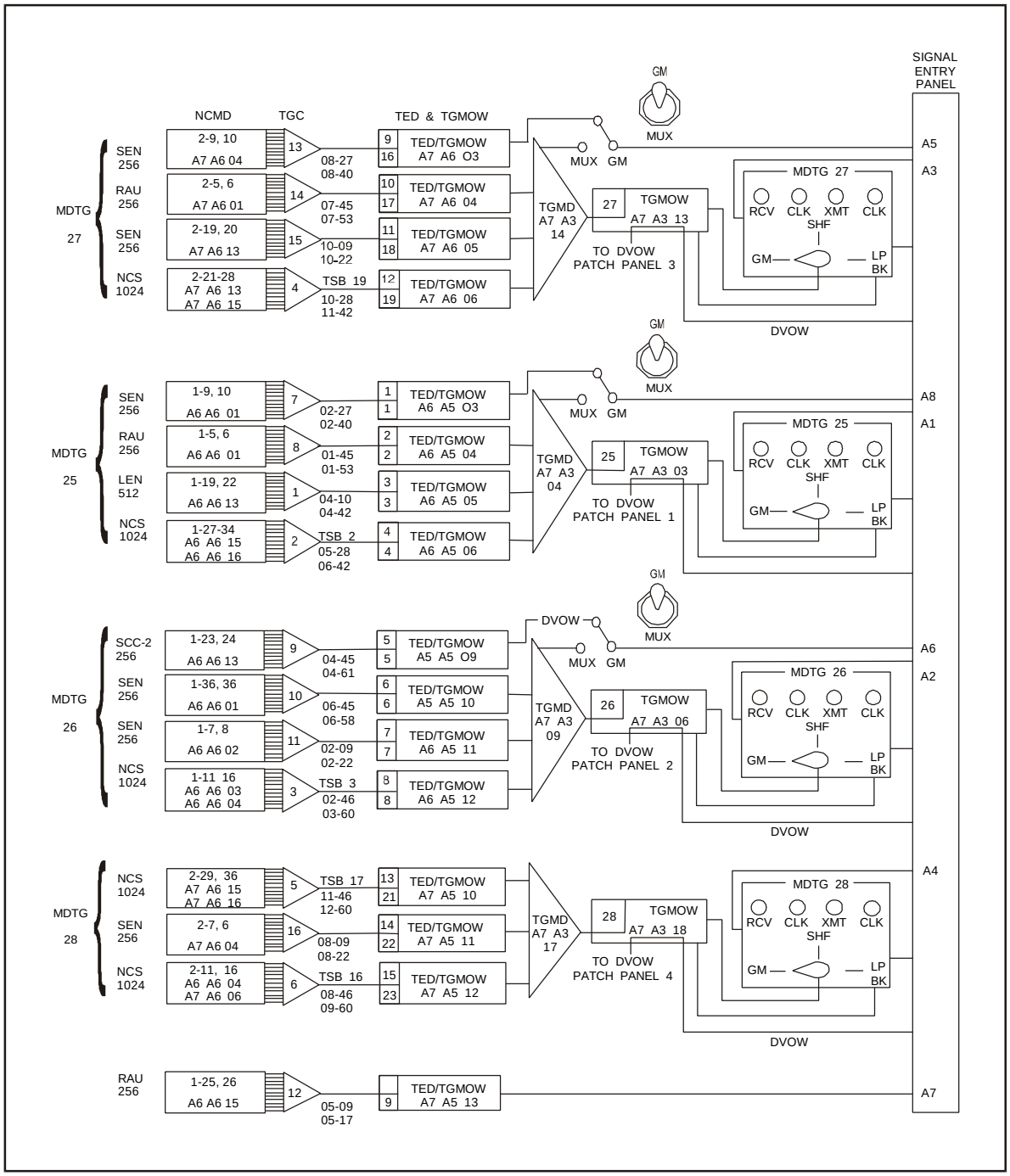

Figure 4-6. NCS Equipment Assignment Diagram

4-37. A standard database in the LENS determines the allocation of DTGs. Assigning DTGs is the basis for planning the LEN site layout for cabling and antenna configurations. (See Figure 4-7.)

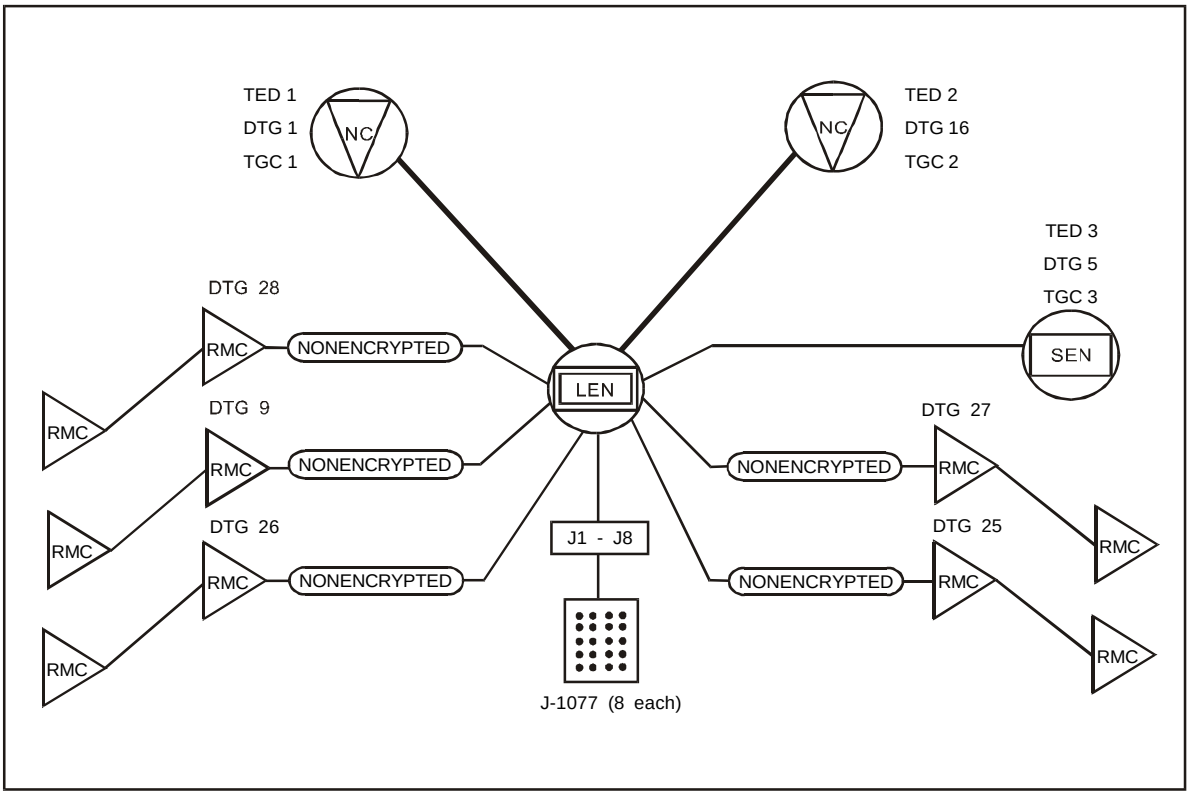

Figure 4-7. LENS DTG/TGC Standard Database

4-38. The configuration also defines the assignment of the NCMD cards. The NCMD assignment determines the number of channels in each TGC. This assignment can be altered within limits to meet operational requirements. The LENS operator's manual and the switch initialization procedures define the limitations. Use reassignment only when needed. (See Table 4-2.)

Table 4-2. LENS NCMD Cards

ENCRYPTED		
TDSGM Location	**NCMD**	**DTG/TGC**
1	15 - 18	1/1 NCS
2	15 - 18	16/2 NCS
1	19 & 20	5/3 SEN
NONENCRYPTED		
TDSGM Location	**NCMD**	**DTG/TGC**
1	25 & 26	9 RMC
2	19 & 22	25 RMC
2	25 & 26	26 RMC
2	31 & 32	27 RMC
2	13 & 14	28 RMC

4-39. The SYSCON staff and the LENS OIC/NCOIC use the LENS DTG/TGC planning diagram (Figure 4-8) and the LENS equipment assignment diagram (Figure 4-9) to set up site layouts. The node manager prepares these diagrams. The SYSCON staff resolves any conflicts.

SITE LAYOUT DIAGRAM										
NC:		COORD:					DATE:			
EXERCISE:		LOCATION:								
LOS(V4)	DTG LEN - SWITCH SHELTER	LINK	BAND	POL / AZ	XMT	RCV	TIME / PRIORITY	DISTANT END CALL SIGN/ PHONE #	NOTES:	
LOS #:	(NCS) - DTG 1 - A6		I / II SHF							
TEAM:										
PH:	(NCS) - DTG 16 - A8		I / III SHF							
LOS(V1)	(SEN) - DTG 5 - A6 CABLED OR LOS(V1)		I / III SHF							
LOS #:										
TEAM:										
PH:										

RMC			J-1077 - SHELTER J1 - J8				
MASTER (288 kbps) RMC #1 LOCATION:	SLAVE (288 kbps) RMC #2 LOCATION:	DTG - SHELTER DTG 9 - A7	J-1077 #1 (J1) LOCATION:	J-1077 #2 (J2) LOCATION:	J-1077 #3 (J3) LOCATION:	J-1077 #4 (J4) LOCATION:	
RMC #3 LOCATION:	RMC #4 LOCATION:	DTG 25 - A1	J-1077 #5 (J5) LOCATION:	J-1077 #6 (J6) LOCATION:	J-1077 #7 (J7) LOCATION:	J-1077 #8 (J8) LOCATION:	
RMC #5 LOCATION:	RMC #6 LOCATION:	DTG 26 - A2	NOTES:				
RMC #7 LOCATION:	RMC #8 LOCATION:	DTG 27 - A3					
RMC #9 LOCATION:	RMC #10 LOCATION:	DTG 28 - A4					

Figure 4-8. LENS Site Layout Diagram

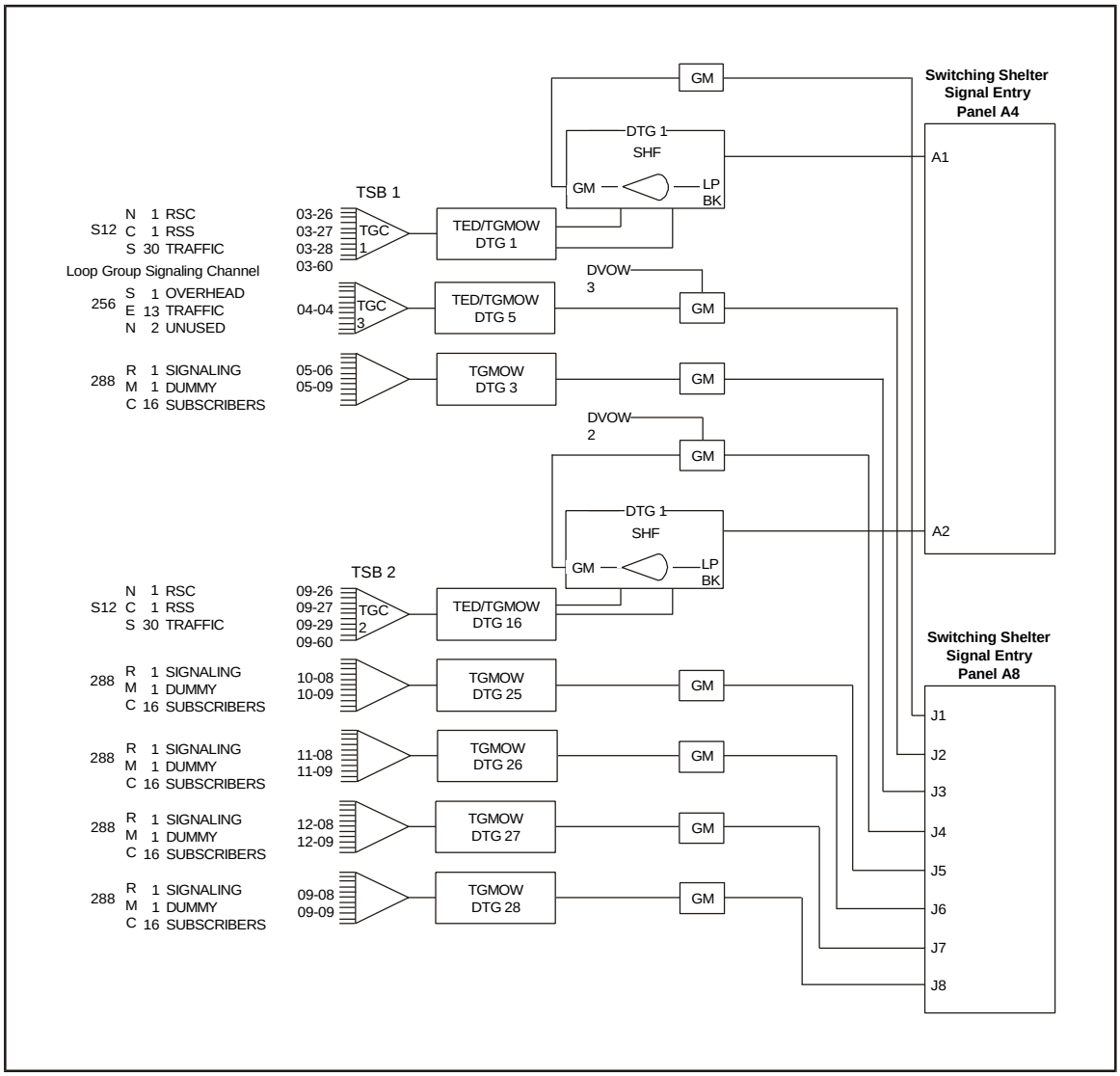

Figure 4-9. LENS Equipment Assignment Diagram

4-40. The DVOW provides secure digital voice communications between local and distant LOS shelters, NCSs, LENSs, and SENSs. Use the following rules when managing the DVOW's 16 ring codes:

- SYSCON develops the initial ring code assignments for all links.
- Refer any ring code conflicts or duplications that affect the DVOW system to SYSCON.
- All NMFs will keep local diagrams showing all ring code assignments and changes to channel connections.

TEAM PACKETS

4-41. Team packets contain the information needed to open and install the different elements of the MSE network. Team and equipment files require updating before creating team packets. SYSCON generates and issues team packets at least two days before deployment (one month for National Guard units). NCs may exercise OPCON over extension nodes outside their company. Team packets are initially distributed to their organizational unit. The company issues team packets to each NC, LEN, remote RAU, and SEN. As a minimum, team packets should include the items covered below:

- LOS frequencies.
  - Azimuths and polarizations.
  - Locations.
  - Activation times establish priorities.
  - System profile or margin.
  - Priority.
- Two copies of the OPORD for each NC and LEN. (One for the NCS operator and one for the node manager.)
- An NC system recapitulation (RECAP) for platoon leaders.
- Team locations RECAP for each battalion administrative/logistics operations center (ALOC).

COMSEC

4-42. The COMSEC custodian develops a sound key management plan that is understood and practiced by all operators and taught to all subscribers. Effective implementation of the plan includes the actions covered below.

4-43. The corps G6 and the division deputy G6 coordinate COMSEC key distribution to all corps and division MSRT users. The teams receive pre-positioned keys IAW the COMSEC key management plan on the day of deployment or in the staging area.

4-44. The S3 ensures the brigade COMSEC custodian distributes the pre-positioned key set to the battalion COMSEC custodian. MSE works when the correct keys are in the correct places in all equipment. SYSCON coordinates with adjacent corps and EAC for gateway keys before deployment.

4-45. COMSEC accountability helps locate keys throughout the network. It is maintained for keys distributed to each element. Pre-positioned COMSEC keys at specified locations ensure switches and users have their respective keys. These keys are needed to operate specific equipment such as switches, MSRTs, and RAUs. COMSEC work sheets help the COMSEC custodian plan and conduct orderly distribution of COMSEC keys. Completed work sheets also provide an accounting record for initial key distribution.

OPORD

4-46. At the end of the planning phase, the corps signal brigade OPORD is produced and distributed. For example, each successful LOS path-profiling project that is completed during the planning phase is printed and distributed to units responsible for installation. In addition, the process includes a planned schedule of events and the five-paragraph format of the OPORD.

4-47. The planned schedule of events lets the signal commander know exactly what is expected. The schedule should include–

- Concept briefing to commanders and staff by the S3.
- Site reconnaissance, if METT-T factors allow.
- Briefings with platoon leaders, platoon sergeants, and switch supervisors.
- Back brief to the battalion commander/S3 by the company commander.
- Final OPORD briefing to commanders, staff, and NC leadership. (At this time issue the OPORD.)
- Final team packets issued to battalions for distribution to teams.

4-48. The five-paragraph format of the OPORD is used when publishing MSE plans or annexes. Mandatory key points are–

- Database edition.
- COMSEC key distribution.
- Number of RAU/MSRT frequency plans and designation of the active plan.
- Which NCS loads which PAL?
- Gateway area codes.
- Geographic priority of RAU coverage (where RAUs should provide coverage).

SITE RECONNAISSANCE

4-49. When a team knows where it will deploy, it conducts a thorough reconnaissance if METT-T factors permit it. For an NC, this usually includes the platoon leader or platoon sergeant, LOS supervisor, and nuclear, biological, and chemical (NBC) team. The NC's reconnaissance must be extremely detailed, as site selection and layout are critical to network success. Ensure all site layouts are correct the first time. The platoon leader completes NC reconnaissance when he fills out the NC diagram showing at least–

- Antenna and LOS(V3) locations.
- RAU location.
- NCS/NMF locations.

4-50. The LOS has first priority of siting, the local RAU second, and the NCS/NMF last.

DATABASE MODIFICATIONS

4-51. A platoon leader determines if the database needs modifying by conducting a back brief to his command on his site layout. The back brief includes accessibility, strip maps, dead zones for LOS radios, available area for logistics support, SEN park area, and so on. SYSCON implements the database change requirements.

NETWORK OPERATIONS

4-52. Network operations begin when planning is complete and the OPORD is distributed. The MSE network must respond to the operational needs of the Army, and it must support the maneuver commanders. Key factors in network operation are covered below.

4-53. The signal brigade commander has TECHCON of all corps MSE assets. Battalion commanders provide assets to support the corps' plan. They ensure movement and installation, operation, and maintenance of their assets.

4-54. The division signal battalion commander manages his network and, through his division's mission, supports the corps network. The corps G6 may designate certain areas of the battlefield to be technically controlled by a division signal battalion commander. If so, the division battalion commander must still request network changes through the corps active SCC-2. The brigade SYSCON has final approval authority.

4-55. The corps area and signal support battalions have the network control terminal (NCT), AN/GGC-66. (The ISYSCON(V2) will replace the NCT.) The NCT sends and receives messages to and from the SCC-2. The battalions may request information from the SCC-2 at any time. When an action takes place concerning one of the MSE teams, the NCT receives an information copy of the message.

4-56. SYSCON manages the MSE network, including COMSEC keys, whether at corps or at the stand-alone division level. The COMSEC key manager directs the initialization, generation, and activation of keys and maintains records on their use and location.

4-57. The SCC-2 cannot generate or distribute keys. It directs the primary node switch (PNS) to generate and transfer COMSEC keys. Normally, the SCC-2 connects directly to the PNS. The corps also designates an alternate NCS. Normally, this is where the standby SCC-2 is connected.

4-58. The stand-alone divisions designate an alternate NCS for key generation. The second NCS is designated as possible backup if the PNS cannot perform bulk transfer due to equipment or hardware problems. However, the COMSEC custodian ensures the alternate NCS has all the COMSEC keys needed to perform bulk transfer for each NCS.

INSTALLING THE BACKBONE (PHASE II)

4-59. The most critical element in MSE operations is establishing and sustaining the backbone network (NC to NC link). The objective is for a strong multilink system that allows the direct bulk transfer of key sets to all NCSs/LENSs and RAU/MSRT frequency plans to all RAUs. Establishing a strong backbone before allowing subscriber connectivity alleviates work arounds due to switch software, hardware, or COMSEC problems. This is also true for loading the PAL. All network managers, NCS supervisors, and node OICs must remember that a PAL is loaded only once. Network managers designate which NCSs will load and keep track of PALs (Figure 4-10).

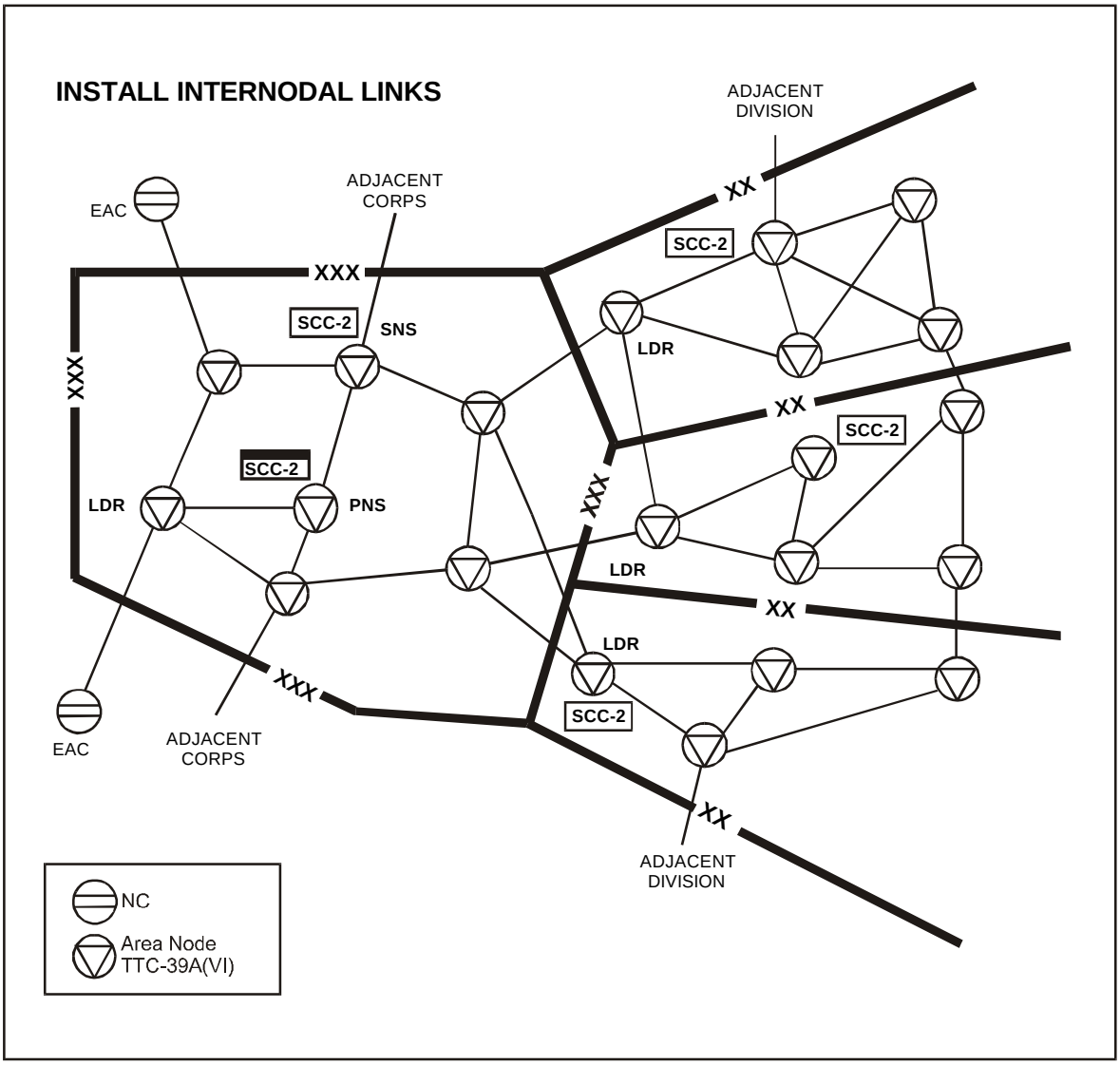

Figure 4-10. Phased Deployment, Phase II, Internodal Links

4-60. OICs follow OPORD procedures for priority of backbone LOS connectivity once deployed. All radio links may work at the same time; however, only one link is engineered into the switch at a time. Duplication and bypass follow the link priority list. (See Figure 4-11.) At this stage, node OICs inform SYSCON of their NCs operation, including messages back to the SCC-2. (See Figures 4-12 and 4-13.) All NCSs/LENSs keep the duplication and bypass assignment printed and current. This information is vital when nodal links fail, or as NCs move throughout the network, or when redirection of duplication and bypass occur.

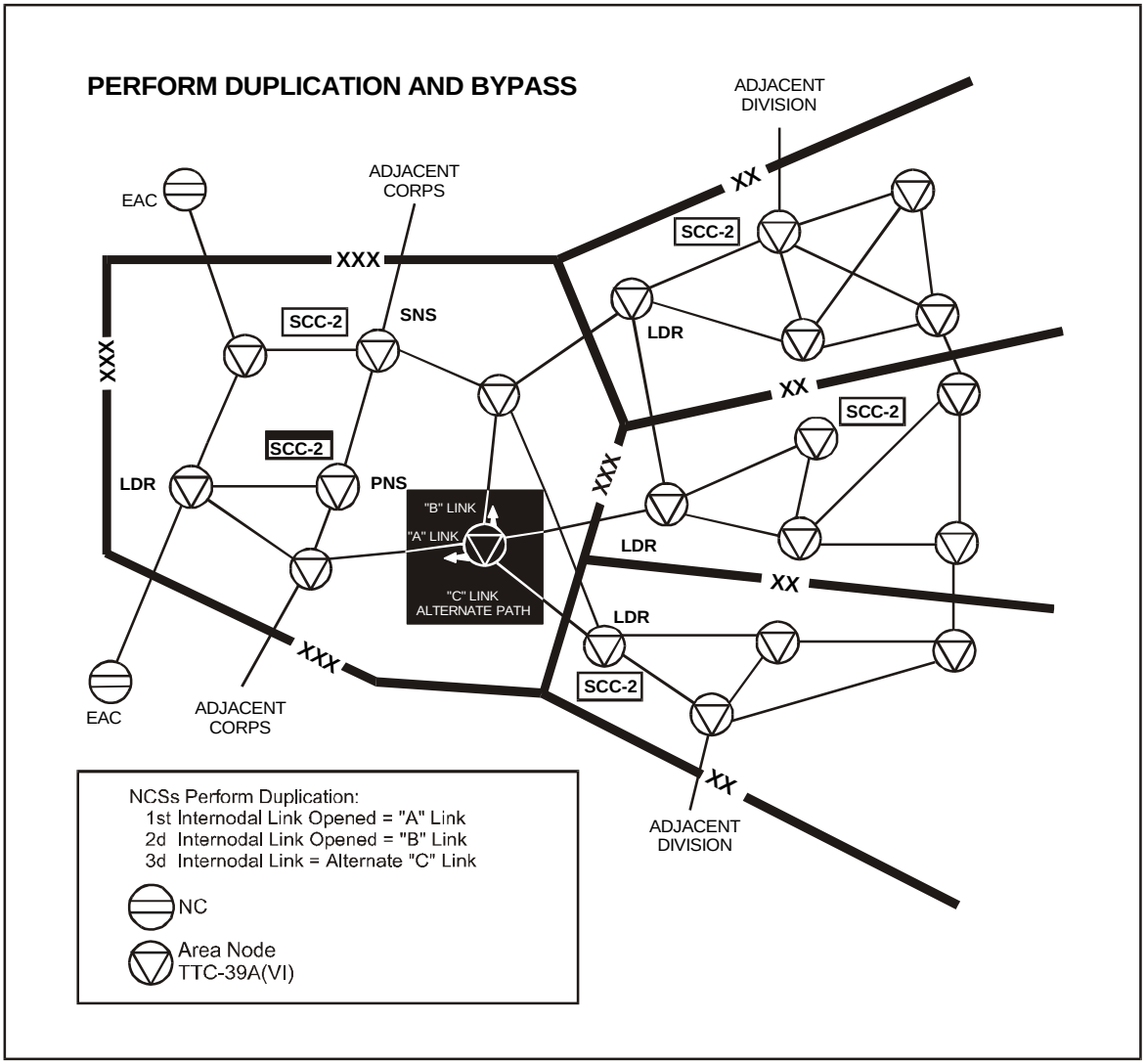

Figure 4-11. Phased Deployment, Phase II, Duplication and Bypass

ORDERS	REPORTS
NC41: OPEN ORDER MOVE ORDER OPEN LINK ORDER: NC41 ↔ NC42 NC41 ↔ NC43 NC41 ←┤ R40 NC41 ←┤ E71 NC41 ↔ L40	
RAU (R40): OPEN ORDER MOVE ORDER OPEN LINK ORDER: NC41 ↔ R40	OPEN LINK REPORTS: NC41-NC42 NC41-NC43 NC41-R40 NC41-E71 NC41-L40
LEN (L40): OPEN ORDER MOVE ORDER OPEN LINK ORDER: NC41 ↔ L40 NC42 ↔ L40	**Notes:** **1. ↔ Arrows point to elements that receive the orders from the SCC-2.** **2. ←┤ Arrows point to elements that receive the orders from the SCC-2. The NC or LEN relays the orders.**
SEN (E71): OPEN ORDER MOVE ORDER OPEN LINK ORDER: NC41 ←┤ E71	INITIAL DEPLOYMENT

Figure 4-12. Initial Deployment Orders and Reports

ORDERS	REPORTS
CLOSE ORDERS: E71 L40 R40 NC41	CLOSE REPORTS: E71 L40 R40 NC41
CLOSE LINK ORDERS: NC41 ↔ NC42 NC41 ↔ NC43 *NC41 ↔ R40 *NC41 ↔ E71 NC41 ↔ L40	CLOSE LINK REPORTS: NC41-E71 NC41-L40 NC41-R40 NC41-NC42 NC41-NC43
OPEN ORDERS: NC41 R40 L40 E71	OPEN LINK REPORTS: NC41-NC42 NC41-NC43 NC41-R40 NC41-L40 NC41-E71
MOVE ORDERS: NC41 R40 L40 E71	***NC41 relays orders to R40 and E71.**

Figure 4-13. Displacement Orders and Reports

4-61. As the first backbone link is established (DTG status 13 and trunk signaling buffer (TSB) 5), the NCS operator verifies link status. He uses the display interswitch link (DIL) screen before preparing to send duplication and bypass to another NCS. This ensures the link is initialized and a transmission status of Y2 is established. Any other status is unacceptable.

4-62. Once established, each NCS duplicates all virtual trunk groups (32-40) which contain affiliated, preaffiliated, and disaffiliated subscribers and TGCs over the first backbone link. The exception is TGCs 1 through 6, unless downsized for a SEN/RAU. (See Figure 4-14.) NCSs continue to follow their priority list, and the second backbone link is established. The NCS operator deletes all even-numbered TGCs and even virtuals from the first nodal link and duplicates them over the second nodal link. (See Figure 4-15.)

4-63. When problems occur, SYSCON is notified. The problems are corrected before the RAUs turn on their marker beacon (signals). On direction from the SYSCON, the NMF directs the RAU operator to turn on his marker beacon. However, if the NCS fails, the NMF directs the RAU to turn off the marker beacon. Once the NCS recovers, the operator verifies his mode of operation and requests permission to turn on the marker beacon. Modes of operation include automatic, forced, and inhibited.

4-64. RAU or SEN subscribers affiliated with a bypassed parent switch automatically transfer to another designated NCS or LENS as a group if the RAU or SEN group is marked for bypass. Setting up EUB tables are part of the duplication process. They cannot be on separate DTGs. LEN operators set up EUB and duplication data in both NCs to which they are linked.

4-65. Upon activating EUB, the adjacent NCS provides phone service. The number of channels required determine the number of TGCs (1024) that are bypassed. A SEN requires 13, a RAU requires 8, and the SCC-2 requires 8. There are 58 channels per internodal TGC holding duplication. The NC can have 58 EUB channels per 1024 link. The LEN can have 26 EUB channels per 512 link.

4-66. When the duplication and bypass process is complete and the backbone is operational, the NCS operator performs bulk transfer of COMSEC keys. (See Figure 4-16.) To establish a COMSEC error-free network, the bulk transfer of a master key set is sent directly into the correct hardened unique storage (HUS) locations from the leader switch to the subordinate NCSs in that NSG.

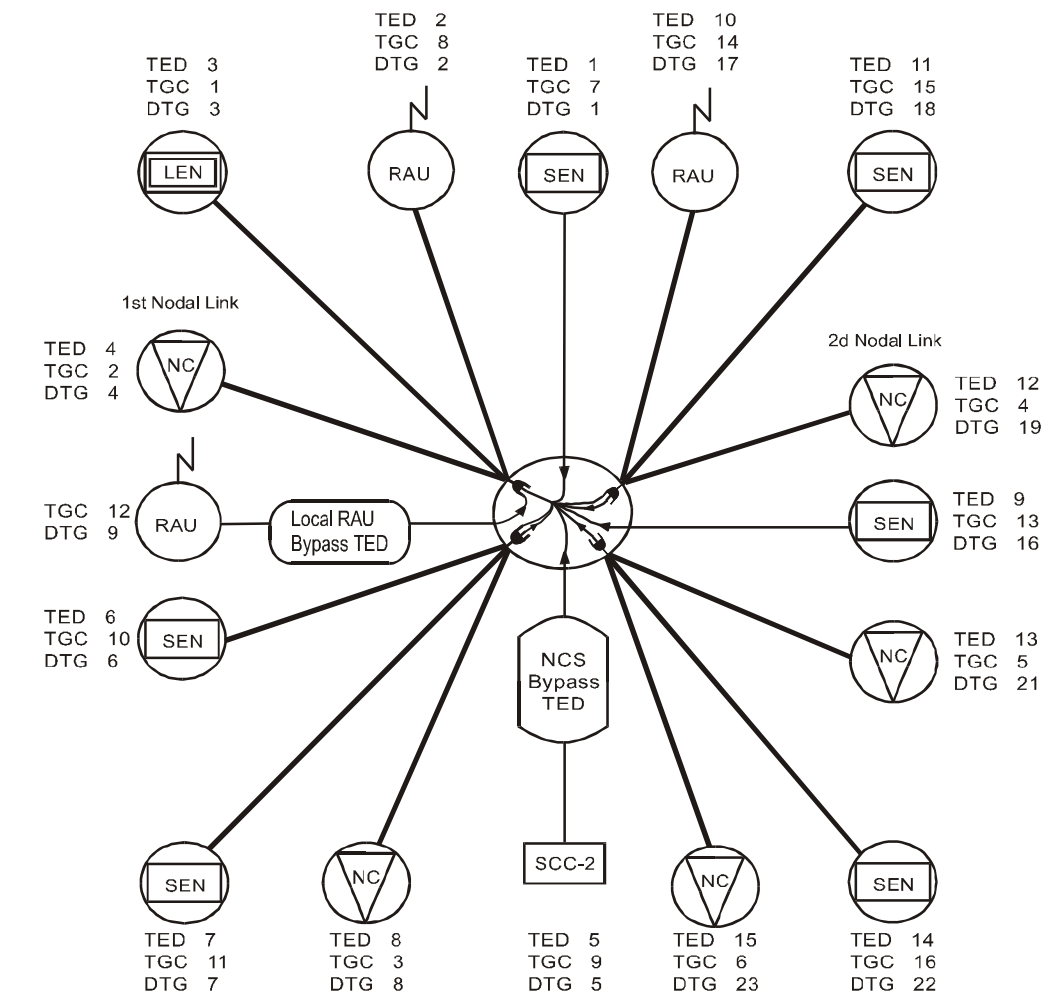

TGC Assignment for Duplication and Bypass

1. Duplicate All TGCs and Virtuals 32-40 Over the First Internodal Link (Except TGCs 1-6 Unless Downsized for a RAU/SEN).

2. Duplicate All Odd- or Even-Numbered Virtuals and TGCs Over the Second Nodal Link.

TGC	TRUNK TYPES	NUMBER OF TRUNKS
7, 10, 11, 13, 15, 16	SEN	10/13
9	SCC-2	8
12, 14, 8	Local, Remote RAU	8
32-35	Local, Affiliated Loops	
36	Absent (Disaffiliated) Subscribers	
37-40	Preaffiliated Subscribers	
1, 2, 3, 4, 5, 6	NC (Only if Downsized for a RAU or SEN)	
3	SEN (at LEN)	

Legend:

LOS

Cable

Figure 4-14. Duplication and Bypass, First Nodal Link

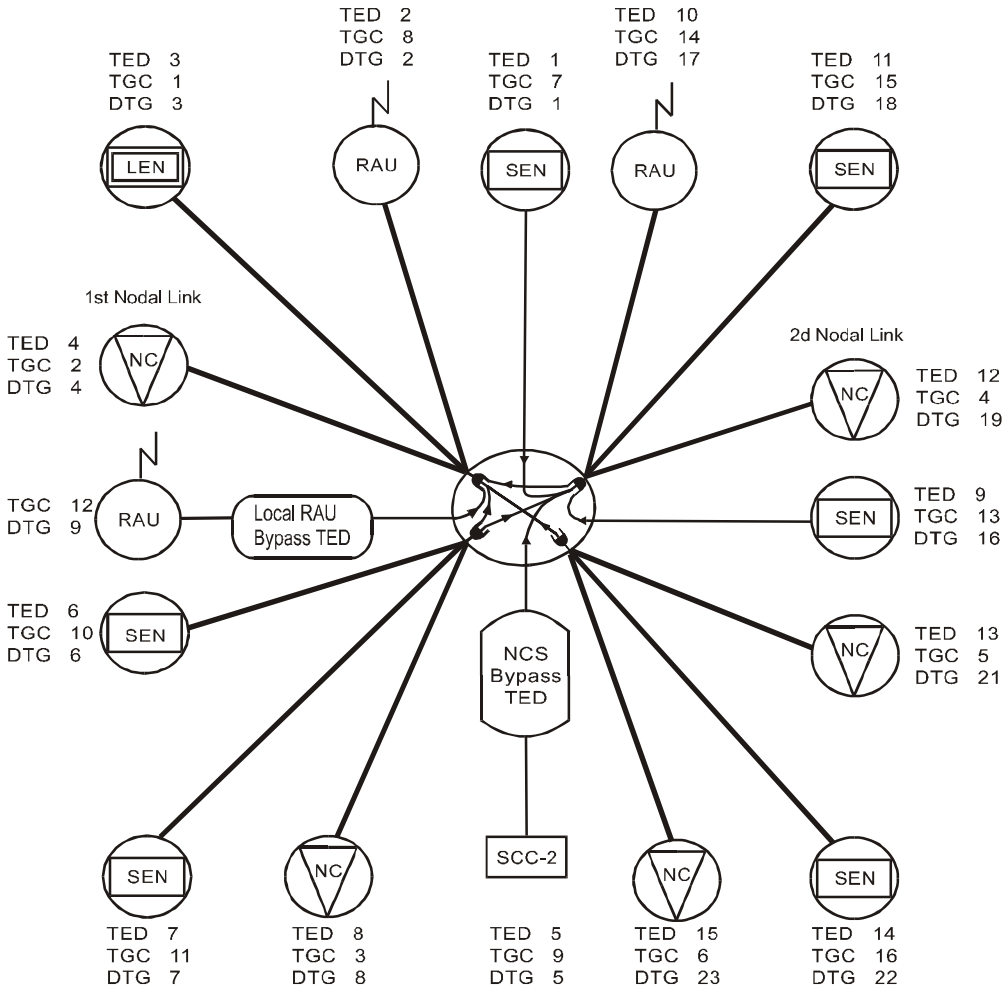

TGC Assignment for Duplication and Bypass

1. Duplicate All TGCs and Virtuals 32-40 Over the First Internodal Link (Except TGCs 1-6 Unless Downsized for a RAU/SEN).

2. Duplicate All Odd- or Even-Numbered Virtuals and TGCs Over the Second Nodal Link.

TGC	TRUNK TYPES	NUMBER OF TRUNKS
7, 10, 11, 13, 15, 16	SEN	10/13
9	SCC-2	8
12, 14, 8	Local, Remote RAU	8
32-35	Local, Affiliated Loops	
36	Absent (Disaffiliated) Subscribers	
37-40	Preaffiliated Subscribers	
1, 2, 3, 4, 5, 6	NC (Only if Downsized for a RAU or SEN)	
3	SEN (at LEN)	

Legend:

LOS

Cable

Figure 4-15. Duplication and Bypass, Second Nodal Link

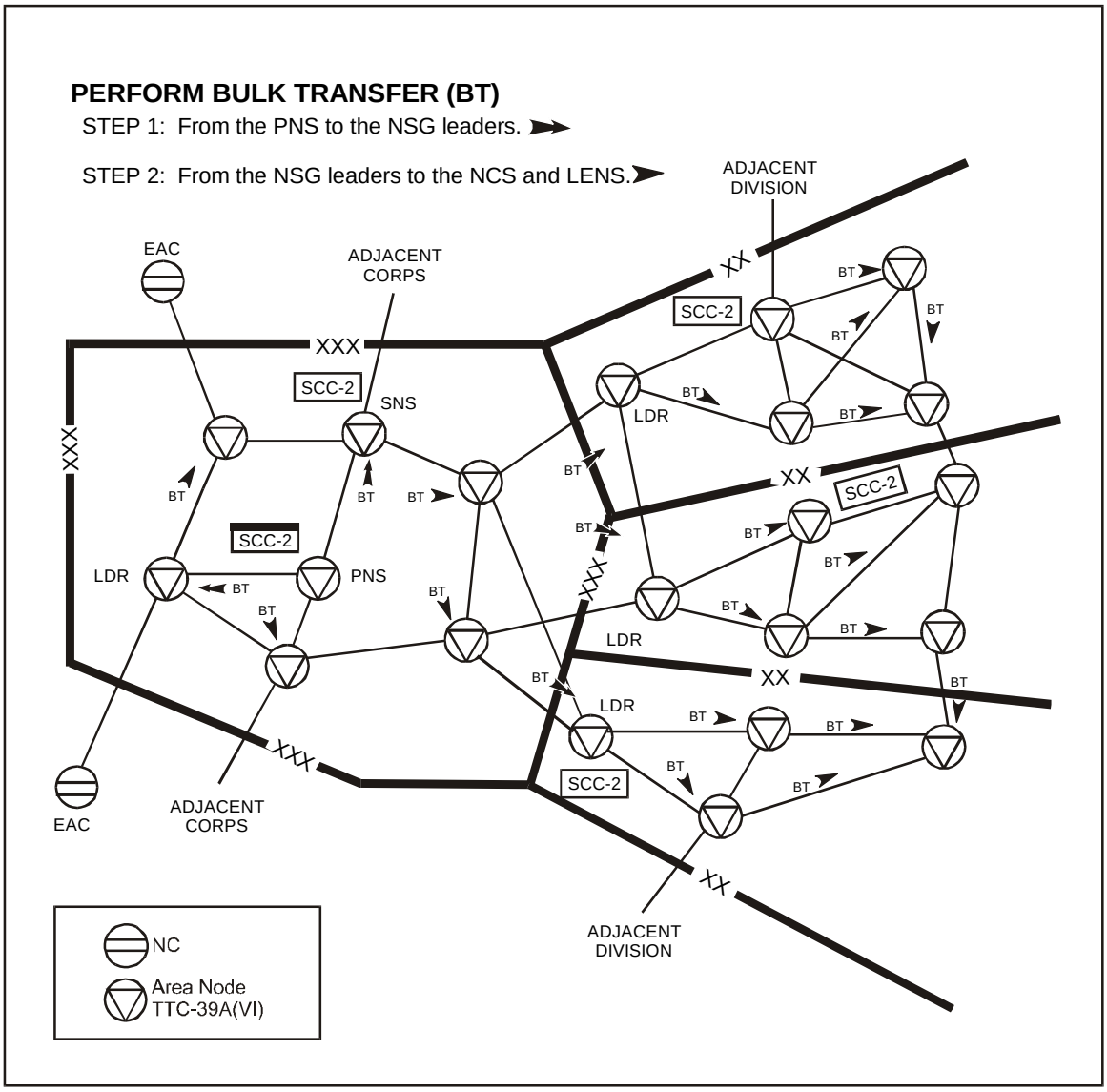

Figure 4-16. Phased Deployment, Phase II, Bulk Transfer

INSTALLING EXTENSIONS (PHASE III)

4-67. After installing the backbone network, each NCS installs extension links by priority. Install local and remote RAUs first as illustrated in Figure 4-17. The NMF notifies the RAU operator to affiliate the group logic unit (GLU) and his DSVT.

4-68. Once the GLU is affiliated, the NMF generates a frequency plan request message for each local or remote RAU to the SCC-2. This is not required if frequency plans are already distributed before deployment. The SCC-2/NPT then automatically sends the frequency plan to the GLU. If the NMF is not available, the SCC-2/NPT can force a frequency plan to the GLU. The RAU operator calls the call service position (CSP) of his NCS to ensure the RAU can process calls. He then calls a CSP of a distant node to ensure

other keys are correct. This process ensures that the COMSEC keys are in the proper HUS locations before providing mobile subscriber access into the network.

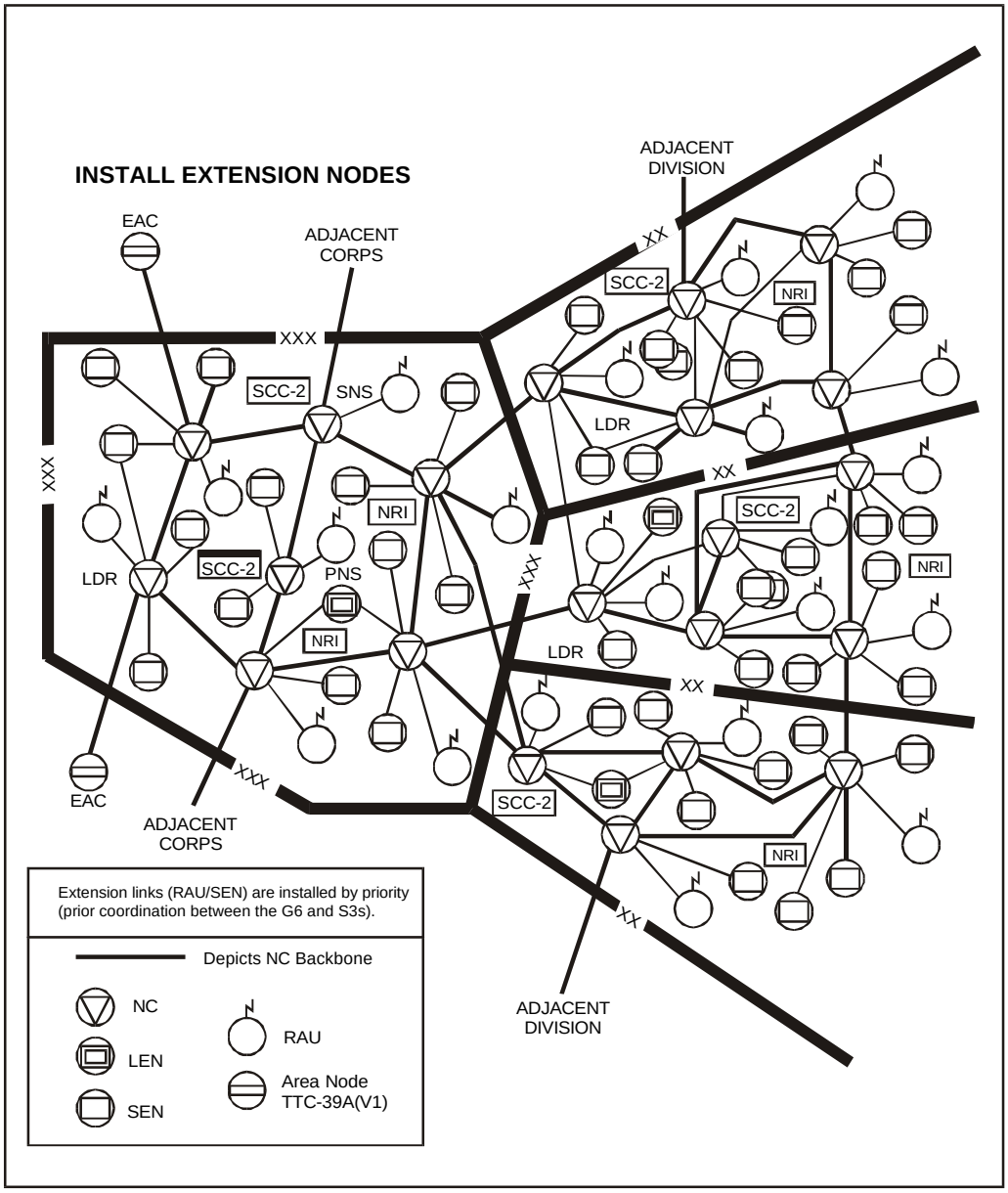

Figure 4-17. Phased Deployment, Phase III, Extension Nodes

4-69. When problems occur, SYSCON is notified. The problems are corrected before the RAUs turn on their marker beacon (signals). On direction from the SYSCON, the NMF directs the RAU operator to turn on his marker beacon. However, if the NCS fails, the NMF directs the RAU to turn off the marker beacon. Once the NCS recovers, the operator verifies his mode of operation and requests permission to turn on the marker beacon. Modes of operation include automatic, forced, and inhibited.

4-70. The SEN teams deploy to support CPs and to provide service for wire subscribers. They install distribution boxes (J-1077) and enforce cable/wire-tagging procedures. The SENS operator initializes the SENS, used in either a stand-alone or MSE network configuration, and loads COMSEC keys required for operation.

4-71. Once connectivity is established, the NCS calls the SENS operator over the DVOW and directs him to affiliate his DNVT. The SENS operator affiliates his DNVT and calls the NCS CSP to verify if it can process calls. Then, the SENS operator notifies the S6 who notifies subscribers to affiliate their phones.

4-72. The DSVT subscriber off a SEN loads the proper keys (U and M), affiliates his telephone, hangs up, and waits for ring busy and nonsecure warning (NSW) lights to flash. The DSVT subscriber is marked out-of-service if he does not wait for the flashing ring busy and NSW lights. This requires the NCS/LENS operator to restore service. If the SEN has a KY-90, the NCS and SENS operators must ensure they can process calls.

4-73. At this stage, NCs use their priority list to install SENSs. NCs coordinate priority list changes with SYSCON.

OPERATIONAL MANAGEMENT (PHASE IV)

4-74. Operational management is maintaining an effective network that best serves the subscribers and begins after establishing the network. Here, the SCC-2 becomes an operations management tool for making additional changes. The information flow between all elements, units, signal personnel, and the SYSCON becomes more important as the network changes and reconfiguration occurs. (See Figure 4-18.)

4-75. RAU coverage and frequency plans are checked continuously. Ensure SYSCON is aware of all changes that affect the network. The NC's NMF reports frequency interference, equipment failure, COMSEC, and other problems to SYSCON. To identify problems, several management screens at the active SCC-2 need printing periodically. These printed screens help make network decisions when subscribers jump and equipment fails.

4-76. RECAP screens are printed, reviewed, and stored in the station logbook. This logbook should contain at least–

- Link data, RECAP of all planned and in-use internodal and extension node links.
- Authorized and restricted LOS/SHF frequencies.
- Current RAU/MSRT frequency plans.
- Current locations of all assemblages.
- Subscriber management cell operations.
- SCC-2 SICPS layout diagram.

SEN/RAU RR	LEN	NC MASTER	NC SLAVE	MESSAGE	SCC-2	RESPONSIBLE ELEMENT	PLANNING ACTIONS
				OPEN NC ORDER	PROJECT OPEN NC (FOR PLANNING IN NC).	SCC-2	Signal Bde or Bn S3 tells SCC-2 staff to plan an NC deployment to a specific area of the corps battlefield. SCC-2 staff finds best location for NC within that given area. SCC-2 studies for future point (signal path profile). SCC-2 designates which NC deploys. (For initial deployment, the SCC-2 develops the orders and puts them in an envelope and gives them to the Nodal Plt Ldr.) For subsequent NC displacement, the orders are sent via TTY or are hand delivered from the SCC-2to the NC Plt Ldr/Sgt in the NMF. SCC-2 GDU and VDU are updated automatically upon receiving NC status reports. On order or IAW unit SOP, the NC updates the SCC-2 with personnel/ equipment status reports.
				MOVE NC ORDER		SCC-2	
				POSITION STATUS REPORT		NODAL PLT LDR (SLAVE NC)	
				OPEN LINK ORDER		SCC-2	
				OPEN LINK ORDER			
				OPEN LINK REPORT		NODAL PLT LDR (MASTER NC)	
				OPEN LEN ORDER		SCC-2	
				MOVE LEN ORDER		SCC-2	
				POSITION STATUS REPORT		LEN	
				OPEN LINK REPORT		SCC-2	
				OPEN LINK ORDER			
				OPEN LINK REPORT		NODAL PLT LDR (MASTER NC)	
				REQUEST TO OPEN SEN/RAU/RR*		SEN/REMOTE RAU/RR/ OIC/NCOIC	SEN/Remote RAU/RR notifies the SCC-2 (via NC or LEN) of its future location and requests to open and establish a radio link. The SCC-2, using automated signal path profiling, finds a way to link the SEN, remote RAU, or RR to an NC. Then, the SCC-2 creates the appropriate project. All message traffic to and from the SEN/Remote RAU/RR must be routed through an NCS.
				OPEN SEN/RAU/RR ORDER		SCC-2	
				MOVE SEN/RAU/RR ORDER		SCC-2	
				POSITION STATUS REPORT		SEN/REMOTE RAU/RR	
				OPEN LINK ORDER		SCC-2	
				OPEN LINK ORDER		SCC-2	
				OPEN LINK REPORT		MASTER NC	

LEGEND:

- ● Origin of message.
- → Destination of message.
- ◉ Origin of messge relayed via NCS or LEN.
- - - - Indicates message passed to/from the NCS/LENS by telephone, facsimile, or courier, NOT via TTY.
- - - - ▶ Final destination of message. Revised via NCS or LENS.

Figure 4-18. Message Flow

4-77. The active SCC-2 issues orders to all NMFs. It receives reports from the NMFs upon execution of these orders. Thus, the SCC-2 maintains control of the network. The NMF's OIC/NCOIC sends reports by the workstation or other electronic means. This is the only means to update SCC-2 files without manual input by SCC-2 operators. (See Figures 4-19 and 4-20.) All directives and reports for SEN, RAU, NATO, NAI, and relay teams are routed to the NMF and passed by orderwire, telephone, CNR, or courier.

HEADER

VZCZC
007561007
DE7561707/0250/250915Z/0061
TY SM
FM = SCC-2
TO NC = 61
INFO
BT
CONFIDENTIAL

TEXT

TRAILER

OBJ/OPEN/LINK = 61 L02
DTG = 251500Z
COORD/MASTER = PK283460
COORD/SLAVE = PK310443
AZ = 60
BAND = A
FREQ/XMIT = 310.125 MHz
FREQ/RCV = 240.750 MHz
MARGIN = 10
POLARIZATION = V
KEY LINK = 2
BT

Figure 4-19. Open Link Sent to NC 61

07561707
007561707
DE7561007/0086/251500Z/0061
TY SM
FM NC = 61
TO = SCC-2
INFO
BT
CLASSIFICATION
OBJ/OPEN/LINK = 61 L02
DTG = 251500Z
BT

Figure 4-20. Open Link Report from NC 61

4-78. The SCC-2 must have influence over COMSEC, subscribers, frequencies, switches, and teams and equipment for a successful network. (See Figure 4-21.)

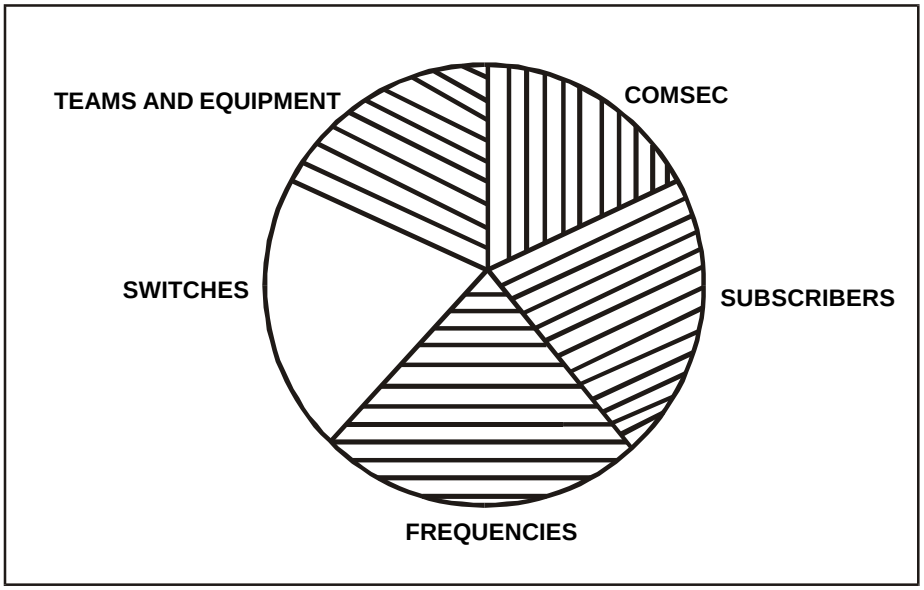

Figure 4-21. Five Major Areas of Phase IV Operational Management

4-79. COMSEC plans and operations do not change when the network deploys. SYSCON directs changes once MSE assets are employed. After installing the network, subscriber key mismatch may occur. COMSEC error messages printed on the NCS/LENS printer identify most problems. COMSEC messages, especially rekeyed terminated messages, are reported to SYSCON to determine if a network COMSEC problem exists. Table 4-3 shows some reportable COMSEC messages.

4-80. Subscriber problems are channeled from the extensions to NMFs through the SYSCON's subscriber cell. The cell includes personnel in charge of subscriber problems. The cell handles subscriber problems and passes information down to the NMF. When the cell manages network problems, it also looks for potential problems and fine-tunes the network. For MSRT subscribers, SYSCON requires all NMFs to monitor RAUs using the display group status (DGS) screens. NMFs report the number of subscribers affiliated to their RAUs. With these reports, SYSCON determines if more RAU coverage is needed.

4-81. SYSCON manages frequencies for all communications systems in the corps/division, including all MSE LOS links and MSRTs/RAUs. Operators absolutely must not flip-flop, swing, bootleg, or use unauthorized frequencies. SYSCON cannot accurately perform frequency management if problems are not reported. Interference problems occur when node OICs change or use other than SCC-2 assigned frequencies. As the network grows, overriding the SCC-2's automatic frequency allocation feature causes interference problems. The SYSCON OIC decides whether to input frequencies and override the SCC-2 manually.

Table 4-3. Reportable COMSEC Messages

Message	Indication
Command 42 failed, KG93xx KG82nn did not SYNCH with xx-xx DRCVR n.	Indicates U key mismatch with an MSRT.
KG82nn did not SYNCH with DRCVR n.	Indicates wrong M key failure to SYNCH with an MSRT.
KG82nn did not SYNCH with xx-xx, DRCVR yy.	Indicates wrong M key in LD(X) position of wire line DSVT.
Rekeyed terminated: n, [directory number] LNXXXXX, [profile] nn.	Indicates M key mismatch between the switch and an MSRT. This normally occurs with the KG82 message.
[Terminal address] xx-xx out of service.	Indicates a wire line DSVT terminal address marked out of service which occurs with M key mismatch and prints with the KG82 failed to SYNCH message.

4-82. All frequency margins should be at least +13 for internodal links and +11 for extension links. These margins are only guidelines and may be altered, depending on local conditions. Margins of +15 may cause over modulation that degrades the link. Consider remoting the LOS with SHF to obtain a higher margin.

4-83. RAU frequencies should contain as many frequency pairs as possible (up to 96; recommended minimum is 40). The frequency manager determines the number of frequency pairs. RAUs working within the same network use 20 percent of the frequency pairs of the active plan duplicated in the reserve plan. This ensures that MSRT users can reaffiliate in the network during frequency plan changes. RAUs working in different networks and occupying the same area must have zero percent of frequency overlaps between active frequency plans. The dialogue between the MSRTs and RAUs searches for a frequency pair. If they match, there is a CRYPTO alarm on the MSRT because of different M keys.

4-84. Switches assist SYSCON in managing the network by determining network performance.

4-85. Traffic metering reports provide the node OIC with a detailed look of the switch's performance. These reports include–

- R1 - switch traffic report.
- R2 - node pair traffic report.
- R3 - summary for TGCs.
- R4 - precedence reports for TGCs.

- R5 - loop traffic report.
- R6 - DTG binary digit error rate report. (All DTGs should average 100 percent of the time at 10-6.)

4-86. Traffic load control (TLC) limits subscriber access at each switch during low call completion rates, bad or busy trunks, or network/switch congestion. The subscriber's profile contains its TLC level. TLC levels are–

- 1 - no restrictions.
- 2 - restrict trunk access.
- 3 - restrict trunk access.
- 5 - restrict switch access.

Note: If TLC 2, 3, or 5 is implemented, telephones can receive calls. However, they will not have a dial tone.

4-87. Gateways may become overloaded with traffic due to increased use or reduced grade of service. Zone restriction limits groups of subscribers, based on profile, access to certain gateways. Two zone restriction lists have a maximum of 101 entries. The other six zone restriction lists have a maximum of 33 entries. Restricted lists prevent subscribers from calling those zones on the list, while permissive lists prevent subscribers from calling any zone that is not on the list. Each entry contains–

- Entry number.
- Start code (defining a single zone or the start of a zone range).
- End code (either blank for a single zone or defining the end of the zone range).

4-88. The zone range uses two entries in the database. The start or end codes consist of a three-digit area code, a four-digit unit code, or a six-digit NATO area code in the form NYX, LNXX, or 9YX XXX, where–

- N = any digit 2 through 9.
- L = any digit 1 through 7.
- X = any digit 0 through 9.
- Y = any digit 0 or 1.
- 9 = defines NATO subscriber.

4-89. NCS/LENS operators can temporarily change subscriber profile assignments with approval from SYSCON. Profile reassignment must be coordinated through the G6.

4-90. When the number of MSRTs affiliated to the RAU exceeds 25, SYSCON should consider distributing the MSRT load to other RAUs or "shaking the blanket." This action requires the RAU operator to turn off the marker beacon and report to the NMF when all radios are free. Shaking the blanket is performed only when there is sufficient overlapping of RAU converge or during low-traffic periods. The switch operator performs an assign SEN/RAU/SCC-2 (ASR) database modification to indicate "absent" and places the remaining subscribers in the absent subscriber mode. This forces active MSRTs to transfer affiliation automatically to the strongest available RAU marker. SYSCON notifies the NMF to turn on the marker beacon and perform another DGS to determine the correct number of MSRTs. However, if

the numbers have not changed, SYSCON considers the importance of subscribers and the use of RAU modes of operation. Modes of operation include–

- **Automatic:** Six radios are for routine subscribers and two are reserved for priority users.
- **Forced:** All radios are used for priority subscribers only.
- **Inhibited:** No radios are reserved; all subscribers can access any radio.

4-91. The node OIC/NCOIC makes database changes for MSE links. SYSCON provides assistance for non-MSE links. If problems occur, SYSCON is notified. All changes are made as they are required.

4-92. SYSCON normally controls the movement of SENs or LENs. During the rapid flow of battle, SENs or LENs may displace before notifying SYSCON. If this occurs, the S6 coordinates with the corps or division deputy G6 or SYSCON. Based on the S6's coordination, the SCC-2 can engineer systems to the extension node's proposed location. If time permits, the SEN's NCOIC and the unit's S6 perform reconnaissance for the proposed site. The SEN NCOIC notifies the NC of information that is passed to SYSCON.

4-93. SYSCON generates team packet FRAGOs and sends them by message to the gaining and losing NC. The SEN calls the losing NC by telephone for permission to close the link. Before closing the link, the NC gives information from the team packet to the SEN to install a link with the gaining NC. The NC enters ASR/MODIFY/ABSENT before closing the link. The NC closes the link and sends a close link report to the SCC-2. The SEN team reports leaving the site to the losing NC by MSRT or FM radio. Once the SEN team arrives on site, they report to the gaining NC who notifies SYSCON by telephone. After establishing the link to the SEN, the gaining NC sends an open link report to the SCC-2.

4-94. SYSCON takes immediate action on unexpected changes, such as destroyed or failed NCs. SYSCON first determines if the NC is destroyed or has failed. A destroyed NC can be identified if no communications can be made to the NC by FM radio or its internodal links. A failed NC is identified by contact being made from the NMF. SYSCON directs the extensions to re-home their LOS antennas to provide connectivity if the NC is inoperable for a long time. For the SENS to regain access into the network, SYSCON finds an NC that can handle the additional system. The SEN is contacted by FM radio to reorient its LOS. It is not always possible to give all the extensions access into the network. SYSCON determines which SEN is given network access.

> **Note: Re-homing links require the SCC-2/NPT to generate a new project, assign new frequencies, and create new team packets.**

4-95. The SCC-2/NPT maintains team and equipment files. The files are updated before and during each operation. This ensures the SCC-2/NPT has the most current information available. It is important to update these files because without updated information, teams could be committed to a mission they are not equipped to accomplish. While in garrison, the operational readiness report (ORR) is used to update the SCC-2/NPT files. Once deployed, the node OIC must feed this information to the SCC-2 by report messages.

Chapter 5

Network Database Management

This chapter describes database development and provides doctrinal guidance to accomplish those tasks. The discussion includes developing and managing an MSE database using the NPT. The NPT and the SCC-2 are used as the network status controller including the NMC for the TPN operation and management.

MANAGEMENT AND CONTROL

5-1. The NPT, SCC-2, NCS, LENS, and their NMFs operate from a standardized network database. The critical part of long-range planning is initially generating the network database. The corps or the division G6, if establishing a stand-alone division network, sets up network management and control parameters for this process.

5-2. The signal brigade headquarters conducts management and control in an MSE corps network. The division signal battalion headquarters conducts management and control in a stand-alone division MSE network. Within these headquarters, the SYSCON conducts MSE network planning and operation. SYSCON maintains TECHCON of the network and is responsible for–

- Planning, engineering, controlling, and maintaining the network.
- Assigning and reassigning variable network operating parameters.
- Distributing all operating parameters networkwide.
- Establishing relationships among network components.

DATABASE DEVELOPMENT

5-3. For signal planners, the supported unit's mission and planning guidance determine the content of the database. Signal planners may prepare one master database from which all missions evolve or prepare individual mission databases to support specific contingencies. The number of databases depends on the differences in force structure, missions, and geographical AO.

5-4. In operation plans (OPLANs), the force commander and staff define each mission, contingency, and exercise. The force signal staff prepares the databases and obtains the following information:

- Active and reserve component forces that require support.
- Radios to be used.
- Available MSE assets and unit information.
- Desired link reliabilities.
- Environmental parameters.

- Desired network-planning factors.
- Subscriber terminals to include–
  - Level of authorized precedence.
  - Type of authorized subscriber terminal and designation of tactical unit where each terminal will deploy.
  - Type of service required by each user/office (for example, progressive conference and commercial network access).
  - Preprogrammed conference participants.
  - Compressed dial participants.
- Expected joint and allied interface requirements, including units and specific mission requirements.
- Expected geographical AOs.
- Authorized and restricted frequencies by range and type.
- Known competing, civilian emitters that could be in the AO, including grid locations, operating frequencies, and transmit power.
- Potential EW emitters.

5-5. This information is then used to respond to one or more of the following areas.

- Digitized maps.
- High point data.
- PALs.
- Profile lists (including compressed dial lists).
- Preprogrammed conference lists (PCLs).
- Team files.
- MSE frequency management.

5-6. The MSE database includes the global database (GDB), and it–

- Supports a seamless network architecture.
- Provides joint and service interoperability at EAC and ECB.
- Provides an effective communications network for any force projection scenario.

5-7. The GDB identifies joint (Commander-in-Chief (CINC)) level, US Army, US Air Force, US Navy, and US Marine organizations. The GDB manager (GDB MGR) is located with the US Army Signal Center. The GDB includes–

- Nonduplicated PAL sublist numbers.
- Nonduplicated team label identification for switch and control systems.
- Nonduplicated phone numbers.
- Global Standard Profile Matrix (GSPM) 255.

5-8. The NPT can develop the MSE network database, plan and engineer the network, and distribute team information to all appropriate switches. The SCC-2 acts as network status controller, and the NMC within the SCC-2 manages the operation of the TPN after it is initialized and loaded with the database.

DIGITIZED MAP REQUIREMENTS

5-9. The MSE NPT uses two types of map data for its software applications. Both are originally sourced from the National Imagery and Mapping Agency (NIMA) and are available on compact disk-read only memory (CD-ROM).

5-10. The ARC-Digitized Raster Graphics (ADRG) is a digitized picture of paper maps that clearly shows the terrain features (for example, rivers, roads, lakes, hills). They are available in five forms.

- Joint Operations Graphics-Air (JOG-A), 1:250,000.
- Joint Operations Graphics-Ground (JOG-G), 1:250,000.
- Topographic Line Maps (TLM), 1:50,000.
- Tactical Pilotage Charts (TPC), 1:50,000.
- Operational Navigation Charts (ONC), 1: 1,000,000.

5-11. The digitized terrain elevation data (DTED), Level 1, provides the terrain data applied to the digitized map for use in site location and radio system profiling.

HIGH POINT DATA REQUIREMENTS

5-12. High points are developed using the high elevation retrieval option within the network planning-frequency assignment application of the NPT. A user-selected rectangular area, defined by coordinates of its southwest and northeast corners, can be established using appropriate map data. This rectangular area map plot can be divided into five rows of five columns (equaling 25 cells) with up to five high points per cell, so that selected high points may be chosen throughout the original map plot. When selecting high points, a minimum separation value is applied to prevent all high points from being on the same high piece of terrain (for example, single hilltop). With this capability, the NPT can make a map reconnaissance of potential site locations before making the physical reconnaissance.

5-13. Two other NPT software applications support high point refinement. The interactive asset placement (IAP) application searches for high elevation placement for particular radio links at a site that still profiles. The automatic asset placement (AAP) application checks for the centroid of mass of switches that an NC supports and identifies the highest ground within a 1-kilometer area of a selected site.

5-14. Signal planners must consider all METT-T factors when selecting potential high points. The final high point selection is coordinated with senior headquarters SYSCON and the G3. Other weapons and communication systems can have high points as key terrain.

PREAFFILIATION LIST REQUIREMENTS

5-15. The MSE database includes telephone numbers for fielded units contained on the switch PAL. This database contains a unique telephone number for each subscriber position. The database is updated annually according to actual subscriber requirements that allocate a specific type of terminal to each operational subscriber.

5-16. The PAL sublists identify subscribers' numbers and the associated profile service characteristics likely to be affiliated with the network. The signal organization planner, through the US Army Signal Center GDB MGR, manages the development of the PAL. A PAL database can have up to 1,000 PAL sublists (database designators DB000-DB999). Each PAL sublist can contain a maximum of 200 subscribers. Each sublist is developed according to the standard requirements code (SRC) assigned to each unit or entity within a PAL database. The sublist may include command structure or community of interest, such as division main (DMAIN), division tactical command post (DTAC), or division rear (DREAR). PAL sublists are a part of the global PAL (GLPAL) baseline that includes all joint and US military services.

5-17. The doctrinal guidelines for developing a PAL database are shown below.

5-18. Assign unit or telephone prefixes (first part of the phone number) according to the Global Block Numbering Plan (GBNP) approved in June 1995, and subsequently changed or defined by the GDB MGR.

5-19. Assign telephone numbers by using the prefix from the **unitlist.dbf** and associating a suffix from the **suffix.dbf** based on the SRC or subscriber template. The subscriber database is created from association and reviewed by the network manager or PAL manager of the specific PAL database. Units should use the subscriber database to develop telephone directories to meet their requirements.

5-20. Ensure a subscriber's telephone number is unique with a profile assigned and placed only on one sublist.

5-21. Develop PAL sublists along task organized lines, depending on requirements. A subscriber's DNVT and MSRT number may appear on different PAL sublists. This depends on the way the network deploys and supports the units.

5-22. Group GLPAL sublists for corps into DB000-DB999 signal technical numbers as shown in Table 5-1.

5-23. Group GLPAL sublists for all other databases into DB000-DB099 signal technical numbers as shown in Table 5-2.

Table 5-1. Corps GLPAL Sublists

Database Designators	Community of Interest
DB000	Area Brigade DBA00 Corps Signal Brigade SCC-2/ ISYSCON
DB001-DB009	Area Battalion DBA01 Corps
DB010-DB019	Area Battalion DBA02 Corps
DB020-DB029	Area Battalion DBA03 Corps
DB030-DB039	Area Battalion DBA04 Corps (Support)
DB040-DB049	Division DBD01
DB050-DB059	Division DBD02
DB060-DB069	Division DBD03
DB070-DB079	Division DBD04
DB080-DB089	Division DBD05
DB090-DB094	Division DBD06
DB095-DB099	Division DBD07

Table 5-2. GLPAL Sublists for Other Databases

Database Designators	Community of Interest
DB000	Area Brigade DBA00 Command or Brigade ISYSCON
DB001-DB009	Area Battalion DBA01
DB010-DB019	Area Battalion DBA02
DB020-DB029	Area Battalion DBA03
DB030-DB039	Area Battalion DBA04
DB040-DB049	Area Battalion DBA05
DB050-DB059	Area Battalion DBA06
DB060-DB069	Area Battalion DBA07
DB070-DB079	Area Battalion DBA08
DB080-DB089	Area Battalion DBA09
DB090-DB094	Area Battalion DBA10
DB095-DB099	Area Battalion DBA11
DB100-DB999	As Required

5-24. Table 5-3 shows an example of the switch PAL.

Table 5-3. Switch PAL

Switch PAL Example	
PA520597 contains 9 PALs	
PAL Number 52001	
I_CTSC 29 SC BN NCS 5201	
9 entries:	
5200100	184
5200101	190
5200102	190
5200103	190
5200104	190
5200105	190
5200106	190
5200110	190
5200111	190

5-25. Do not include data terminal adapter (DTA) numbers in switches on PAL sublists or subscriber databases. The network uses these numbers to communicate between switches. They follow the format of DB99907 (999 is number 000-099 and 07 is standard for all flood search switches).

5-26. Group all signal battalion MSRT numbers on one PAL. This allows the signal numbers needed for network control to activate in the first operational NCS and ensures that signal managers have immediate access to the evolving network. Other MSRT subscribers may use a similar rule, so they may have phone service as soon as they enter the area.

5-27. The NPT can accept a PAL load disk with its PBOOKII software application. Do not use PBOOKII software when modifying and updating a PAL. The PBOOKII software application provides an electronic phone book to support tactical switching. It also supports the 63 and 255 profile matrix standards with version 2.01 and the GDB with version 2.02.

PROFILE LIST REQUIREMENTS

5-28. Profiles provide particular phone service and system features to wire and mobile subscribers. The subscriber's profile defines the level of authorized service to each MSE subscriber. A method of developing profiles is to classify the subscribers by type and/or position. Each subscriber is assigned a permanent profile. This profile can be changed temporarily at the switch; however, this is the exception not the rule. Signal planners must consider area TMD communications support requirements, whereas TMD assets require dial-hold (channel reassignment function) circuits through the MSE network.

5-29. The US Army uses the GSPM 255 0895 matrix, which replaces the earlier Army Standard Profile Matrix 0191. The GSPM 255 0895 matrix–

- Increases profiles from 63 to 255.
- Provides additional profiles to meet evolving subscriber service requirements.
- Includes profiles for joint communications networks.
- Provides direct conversion from the 63 to the 255 matrix.
- Addresses the COMSEC rekey rule "250" limitation.
- Provides 19 subscriber features.

5-30. Six basic groups within the matrix are–

- 0 – Wireline subscribers (terminal type-3) DSVT.
- 1 – Mobile subscribers (terminal type-3) MSRT.
- 2 – DNVT subscribers (terminal type-13) DNVT.
- 3 – DTA (terminal type-15).
- 4 – GLU (terminal type-16).
- 5 – Analog/secure terminal unit (STU) (terminal type-248).

5-31. There are 50 subgroups which are categorized by profile and precedence order. The COMSEC rekey rule states that a maximum of 250 mobile subscribers should be assigned on a single rekey ID within a network. All wireline subscribers are assigned to one rekey ID-01. Fourteen mobile groups with unique rekey IDs will assist in preserving the COMSEC limit of 250.

5-32. The GSPM contains the old profile numbers cross-referenced to the GSPM profile. The US Army Signal Center initially converts all databases to the GSPM profiles. Each signal organization network manager may review each subscriber to determine if the new profile meets the subscriber's requirements. Each group for DSVTs converts to 03, 04, and 06, which translates to 009, 010, and 015, respectively. MSRTs may convert directly to MSRT groups 1-7 from old groups 1-7, or MSRT groups 1-7 for division slots and MSRT groups 8-14 for corps troops. EAC and other databases may only use MSRT groups 1-7.

5-33. Figure 5-1 shows the GSPM. The network manager must complete the profile matrix to initiate the MSE network.

PROFILE NUMBER	OLD PROFILE	TERMINAL TYPE	TRAFFIC LOAD CONTROL	SECURITY LEVEL	PRECEDENCE LEVEL	TERMINAL CHARACTERISTICS	MSG SWITCH COMPATIBLE	NET RADIO INTERFACE	PROGRESSIVE CONFERENCE	CALL FORWARDING	COMMERCIAL ACCESS	ESSENTIAL USER BYPASS	COMPRESSED DIALING LIST	ZONE RESTRICTION	DIRECT ACCESS SERVICE	REKEY ID	OLD RKEY ID	NET ID A	NET ID B	BAR TRUNK ACCESS	BAR CALL
GROUP: 001 WIRELINE CD0																					
001		3	1	P	F	V	N	N	Y	Y	Y	Y	0	0	0	01		02	27	N	
002		3	1	P	I	V	N	N	Y	N	N	N	0	0	0	01		02	27	N	
003		3	1	P	I	V	N	N	Y	Y	Y	Y	0	1	0	01		02	27	N	
004		3	2	P	P	V	N	N	Y	Y	Y	Y	0	2	0	01		02	27	N	
005		3	3	P	R	V	N	N	Y	N	N	N	0	4	0	01		02	27	N	
006		3	3	P	R	V	N	N	Y	Y	Y	N	0	4	0	01		02	27	N	
GROUP: 002 WIRELINE CD1																					
007	01	3	1	P	FO	V	N	N	Y	Y	Y	Y	1	0	0	01	01	02	27	N	
008	02	3	1	P	F	V	N	N	Y	Y	Y	Y	1	0	0	01	01	02	27	N	
009	03	3	1	P	I	V	N	N	Y	Y	Y	Y	1	1	0	01	02	02	27	N	
010	04	3	1	P	P	V	N	N	Y	Y	Y	Y	1	2	0	01	03	02	27	N	
011		3	2	P	P	V	N	N	Y	Y	Y	Y	1	2	0	01		02	27	N	
012	05	3	2	P	R	V	N	N	Y	Y	Y	Y	1	4	0	01	04	02	27	N	
013		3	3	P	R	V	N	N	Y	N	N	N	1	4	0	01		02	27	N	
014		3	3	P	R	V	N	N	Y	Y	Y	N	1	4	0	01		02	27	N	
015	06	3	5	P	R	V	N	N	Y	Y	N	N	1	5	0	01	05	02	27	N	
GROUP: 003 WIRELINE CD2																					
016		3	1	P	FO	V	N	N	Y	Y	Y	Y	2	0	0	01		02	27	N	
017	07	3	1	P	F	V	N	N	Y	Y	Y	Y	2	0	0	01	06	02	27	N	
018	08	3	1	P	I	V	N	N	Y	Y	Y	Y	2	1	0	01	07	02	27	N	
019	09	3	1	P	P	V	N	N	Y	Y	Y	Y	2	2	0	01	08	02	27	N	
020		3	2	P	P	V	N	N	Y	Y	Y	Y	2	2	0	01		02	27	N	
021	10	3	2	P	R	V	N	N	Y	Y	Y	Y	2	4	0	01	09	02	27	N	
022		3	3	P	R	V	N	N	Y	N	N	N	2	4	0	01		02	27	N	
023		3	3	P	R	V	N	N	Y	Y	Y	N	2	4	0	01		02	27	N	
024	11	3	5	P	R	V	N	N	Y	Y	N	N	2	5	0	01	10	02	27	N	
GROUP: 004 WIRELINE CD3																					
025		3	1	P	F	V	N	N	Y	Y	Y	Y	3	0	0	01		02	27	N	
026		3	1	P	I	V	N	N	Y	Y	Y	Y	3	1	0	01		02	27	N	
027		3	2	P	P	V	N	N	Y	Y	Y	Y	3	2	0	01		02	27	N	
028		3	3	P	R	V	N	N	Y	N	N	N	3	4	0	01		02	27	N	
029		3	3	P	R	V	N	N	Y	Y	Y	N	3	4	0	01		02	27	N	

Figure 5-1. GSPM

PROFILE NUMBER	OLD PROFILE	TERMINAL TYPE	TRAFFIC LOAD CONTROL	SECURITY LEVEL	PRECEDENCE LEVEL	TERMINAL CHARACTERISTICS	MSG SWITCH COMPATIBLE	NET RADIO INTERFACE	PROGRESSIVE CONFERENCE	CALL FORWARDING	COMMERCIAL ACCESS	ESSENTIAL USER BYPASS	COMPRESSED DIALING LIST	ZONE RESTRICTION	DIRECT ACCESS SERVICE	REKEY ID	OLD RKEY ID	NET ID A	NET ID B	BAR TRUNK ACCESS	BAR CALL
GROUP: 005 WIRELINE CD4																					
030		3	1	P	F	V	N	N	Y	Y	Y	Y	4	0	0	01		02	27	N	
031		3	1	P	I	V	N	N	Y	Y	Y	Y	4	1	0	01		02	27	N	
032		3	2	P	P	V	N	N	Y	Y	Y	Y	4	2	0	01		02	27	N	
033		3	3	P	R	V	N	N	Y	N	N	N	4	4	0	01		02	27	N	
034		3	3	P	R	V	N	N	Y	Y	Y	N	4	4	0	01		02	27	N	
GROUP: 006 WIRELINE CD5																					
035		3	1	P	F	V	N	N	Y	Y	Y	Y	5	0	0	01		02	27	N	
036		3	1	P	I	V	N	N	Y	Y	Y	Y	5	1	0	01		02	27	N	
037		3	2	P	P	V	N	N	Y	Y	Y	Y	5	2	0	01		02	27	N	
038		3	3	P	R	V	N	N	Y	N	N	N	5	4	0	01		02	27	N	
039		3	3	P	R	V	N	N	Y	Y	Y	N	5	4	0	01		02	27	N	
GROUP: 007 WIRELINE NRI																					
040	38	3	2	P	I	V	N	Y	N	N	N	N	0	0	0	01	23	02	27	N	
GROUP: 008 WIRELINE Air Force Packet ➔ Army																					
041		3	1	P	F	M	N	N	N	N	N	Y	0	0	0	01		02	27	N	
GROUP: 009 WIRELINE Data/Voice																					
042		3	1	P	FO	M	Y	N	N	N	N	Y	0	0	0	01		02	27	N	
043		3	1	P	F	M	Y	N	N	N	N	Y	0	0	0	01		02	27	N	
044		3	1	P	F	M	Y	N	N	N	N	N	0	1	0	01		02	27	N	
045	33	3	2	P	F	M	Y	N	N	N	N	Y	0	6	0	01	18	02	27	N	
046		3	1	P	I	M	Y	N	N	N	N	Y	0	1	0	01		02	27	N	
047		3	1	P	I	M	Y	N	N	N	N	Y	0	6	0	01		02	27	N	
048	34	3	2	P	I	M	Y	N	N	N	N	Y	0	6	0	01	19	02	27	N	
049		3	1	P	P	M	Y	N	N	N	N	Y	0	2	0	01		02	27	N	
050		3	1	P	P	M	Y	N	N	N	N	Y	0	6	0	01		02	27	N	
051	35	3	3	P	P	M	Y	N	N	N	N	Y	0	6	0	01	20	02	27	N	
052		3	2	P	R	M	Y	N	N	N	N	N	0	4	0	01		02	27	N	
053	36	3	3	P	R	M	Y	N	N	N	N	N	0	6	0	01	21	02	27	N	
054		3	5	P	R	M	Y	N	N	N	N	N	0	6	0	01		02	27	N	
GROUP: 010 WIRELINE Data/Only																					
055		3	1	P	FO	D	N	N	N	N	N	Y	0	0	0	01		02	27	N	
056		3	1	P	F	D	N	N	N	N	N	Y	0	0	0	01		02	27	N	
057		3	1	P	I	D	N	N	N	N	N	Y	0	1	0	01		02	27	N	
058		3	3	P	P	D	N	N	N	N	N	Y	0	2	0	01		02	27	N	
059		3	4	P	R	D	N	N	N	N	N	N	0	4	0	01		02	27	N	

Figure 5-1. GSPM (Continued)

PROFILE NUMBER	OLD PROFILE	TERMINAL TYPE	TRAFFIC LOAD CONTROL	SECURITY LEVEL	PRECEDENCE LEVEL	TERMINAL CHARACTERISTICS	MSG SWITCH COMPATIBLE	NET RADIO INTERFACE	PROGRESSIVE CONFERENCE	CALL FORWARDING	COMMERCIAL ACCESS	ESSENTIAL USER BYPASS	COMPRESSED DIALING LIST	ZONE RESTRICTION	DIRECT ACCESS SERVICE	REKEY ID	OLD RKEY ID	NET ID A	NET ID B	BAR TRUNK ACCESS	BAR CALL
GROUP: 011 WIRELINE DAS Preferred/Voice (P/V)																					
060		3	1	P	F	V	N	N	N	N	N	Y	0	0	1	01		02	27	N	
061	37	3	1	P	I	V	N	N	N	N	N	Y	0	0	1	01	22	02	27	N	
062		3	1	P	P	V	N	N	N	N	N	Y	0	0	1	01		02	27	N	
GROUP: 012 WIRELINE DAS Required/Multimode (R/M)																					
063		3	1	R	F	M	N	N	N	N	N	Y	0	0	1	01		02	27	N	
064		3	1	R	I	M	N	N	N	N	N	Y	0	0	1	01		02	27	N	
065		3	2	R	P	M	N	N	N	N	N	Y	0	0	1	01		02	27	N	
GROUP: 013 WIRELINE DAS Required/Voice (R/V)																					
066		3	1	R	F	V	N	N	N	N	N	Y	0	0	1	01		02	27	N	
067		3	1	R	I	V	N	N	N	N	N	Y	0	0	1	01		02	27	N	
068		3	2	R	P	V	N	N	N	N	N	Y	0	0	1	01		02	27	N	
GROUP: 014 WIRELINE TOP SECRET/Voice (TS/V)																					
069		3	1	E	F	V	N	N	Y	Y	N	Y	1	0	0	01		02	27	N	
070		3	1	E	I	V	N	N	Y	Y	N	Y	1	1	0	01		02	27	N	
071		3	1	E	P	V	N	N	Y	Y	N	Y	1	3	0	01		02	27	N	
GROUP: 015 WIRELINE TOP SECRET/Multimode (TS/M)																					
072		3	1	E	I	M	Y	N	N	N	N	Y	0	1	0	01		02	27	N	
073		3	1	E	P	M	Y	N	N	N	N	Y	0	2	0	01		02	27	N	
074	39	3	1	E	I	M	Y	N	N	N	N	N	1	0	0	01	24	02	27	N	
075	40	3	1	E	I	M	Y	N	N	N	N	N	1	0	0	01	25	02	27	N	
076		3	2	E	P	M	Y	N	N	N	N	Y	1	2	0	01		02	27	N	
077		3	1	E	I	M	Y	N	N	N	N	Y	2	1	0	01		02	27	N	
078		3	2	E	P	M	Y	N	N	N	N	Y	2	2	0	01		02	27	N	
GROUP: 016 WIRELINE TOP SECRET/Data (TS/D)																					
079		3	1	E	I	D	N	N	N	N	N	Y	0	2	0	01		02	27	N	
080		3	1	E	P	D	N	N	N	N	N	Y	0	4	0	01		02	27	N	
GROUP: 117 MOBILE CD1																					
081	01	3	1	P	FO	V	N	N	Y	Y	Y	Y	1	0	0	02	01	02	27	N	
082	02	3	1	P	F	V	N	N	Y	Y	Y	Y	1	0	0	02	01	02	27	N	
083	03	3	1	P	I	V	N	N	Y	Y	Y	Y	1	1	0	02	02	02	27	N	
084	04	3	1	P	P	V	N	N	Y	Y	Y	Y	1	2	0	03	03	02	27	N	
085	05	3	2	P	R	V	N	N	Y	Y	Y	Y	1	4	0	04	04	02	27	N	
086	06	3	5	P	R	V	N	N	Y	Y	N	N	1	5	0	05	05	02	27	N	

Figure 5-1. GSPM (Continued)

PROFILE NUMBER	OLD PROFILE	TERMINAL TYPE	TRAFFIC LOAD CONTROL	SECURITY LEVEL	PRECEDENCE LEVEL	TERMINAL CHARACTERISTICS	MSG SWITCH COMPATIBLE	NET RADIO INTERFACE	PROGRESSIVE CONFERENCE	CALL FORWARDING	COMMERCIAL ACCESS	ESSENTIAL USER BYPASS	COMPRESSED DIALING LIST	ZONE RESTRICTION	DIRECT ACCESS SERVICE	REKEY ID	OLD RKEY ID	NET ID A	NET ID B	BAR TRUNK ACCESS	BAR CALL
GROUP: 118 MOBILE CD2																					
087	07	3	1	P	F	V	N	N	Y	Y	Y	Y	2	0	0	02	06	02	27	N	
088	08	3	1	P	I	V	N	N	Y	Y	Y	Y	2	1	0	02	07	02	27	N	
089	09	3	1	P	P	V	N	N	Y	Y	Y	Y	2	2	0	06	08	02	27	N	
090	10	3	2	P	R	V	N	N	Y	Y	Y	Y	2	4	0	07	09	02	27	N	
091	11	3	5	P	R	V	N	N	Y	Y	N	N	2	5	0	08	10	02	27	N	
GROUP: 119 MOBILE GROUP 1																					
092		3	1	P	F	V	N	N	Y	Y	Y	Y	1	0	0	09		02	27	N	
093	12	3	1	P	I	V	N	N	Y	Y	Y	Y	1	1	0	09	11	02	27	N	
094	13	3	1	P	P	V	N	N	Y	Y	Y	Y	1	2	0	09	11	02	27	N	
095	14	3	5	P	R	V	N	N	Y	Y	N	N	1	5	0	09	11	02	27	N	
GROUP: 120 MOBILE GROUP 2																					
096		3	1	P	F	V	N	N	Y	Y	Y	Y	1	0	0	10		02	27	N	
097	15	3	1	P	I	V	N	N	Y	Y	Y	Y	1	1	0	10	12	02	27	N	
098	16	3	1	P	P	V	N	N	Y	Y	Y	Y	1	2	0	10	12	02	27	N	
099	17	3	5	P	R	V	N	N	Y	Y	N	N	1	5	0	10	12	02	27	N	
GROUP: 121 MOBILE GROUP 3																					
100		3	1	P	F	V	N	N	Y	Y	Y	Y	1	0	0	11		02	27	N	
101	18	3	1	P	I	V	N	N	Y	Y	Y	Y	1	1	0	11	13	02	27	N	
102	19	3	1	P	P	V	N	N	Y	Y	Y	Y	1	2	0	11	13	02	27	N	
103	20	3	5	P	R	V	N	N	Y	Y	N	N	1	5	0	11	13	02	27	N	
GROUP: 122 MOBILE GROUP 4																					
104		3	1	P	F	V	N	N	Y	Y	Y	Y	1	0	0	12		02	27	N	
105	21	3	1	P	I	V	N	N	Y	Y	Y	Y	1	1	0	12	14	02	27	N	
106	22	3	1	P	P	V	N	N	Y	Y	Y	Y	1	2	0	12	14	02	27	N	
107	23	3	5	P	R	V	N	N	Y	Y	N	N	1	5	0	12	14	02	27	N	
GROUP: 123 MOBILE GROUP 5																					
108		3	1	P	F	V	N	N	Y	Y	Y	Y	1	0	0	13		02	27	N	
109	24	3	1	P	I	V	N	N	Y	Y	Y	Y	1	1	0	13	15	02	27	N	
110	25	3	1	P	P	V	N	N	Y	Y	Y	Y	1	2	0	13	15	02	27	N	
111	26	3	5	P	R	V	N	N	Y	Y	Y	N	1	5	0	13	15	02	27	N	
GROUP: 124 MOBILE GROUP 6																					
112		3	1	P	F	V	N	N	Y	Y	Y	Y	1	0	0	14		02	27	N	
113	27	3	1	P	I	V	N	N	Y	Y	Y	Y	1	1	0	14	16	02	27	N	
114	28	3	1	P	P	V	N	N	Y	Y	Y	Y	1	2	0	14	16	02	27	N	
115	29	3	5	P	R	V	N	N	Y	Y	N	N	1	5	0	14	16	02	27	N	

Figure 5-1. GSPM (Continued)

PROFILE NUMBER	OLD PROFILE	TERMINAL TYPE	TRAFFIC LOAD CONTROL	SECURITY LEVEL	PRECEDENCE LEVEL	TERMINAL CHARACTERISTICS	MSG SWITCH COMPATIBLE	NET RADIO INTERFACE	PROGRESSIVE CONFERENCE	CALL FORWARDING	COMMERCIAL ACCESS	ESSENTIAL USER BYPASS	COMPRESSED DIALING LIST	ZONE RESTRICTION	DIRECT ACCESS SERVICE	REKEY ID	OLD RKEY ID	NET ID A	NET ID B	BAR TRUNK ACCESS	BAR CALL
GROUP: 125 MOBILE GROUP 7																					
116		3	1	P	F	V	N	N	Y	Y	Y	Y	1	0	0	15		02	27	N	
117	30	3	1	P	I	V	N	N	Y	Y	Y	Y	1	1	0	15	17	02	27	N	
118	31	3	1	P	P	V	N	N	Y	Y	Y	Y	1	2	0	15	17	02	27	N	
119	32	3	5	P	R	V	N	N	Y	Y	N	N	1	5	0	15	17	02	27	N	
GROUP: 126 MOBILE GROUP 8																					
120		3	1	P	F	V	N	N	Y	Y	Y	Y	2	0	0	16		02	27	N	
121	12	3	1	P	I	V	N	N	Y	Y	Y	Y	2	1	0	16	11	02	27	N	
122	13	3	1	P	P	V	N	N	Y	Y	Y	Y	2	2	0	16	11	02	27	N	
123	14	3	5	P	R	V	N	N	Y	Y	N	N	2	5	0	16	11	02	27	N	
GROUP: 127 MOBILE GROUP 9																					
124		3	1	P	F	V	N	N	Y	Y	Y	Y	2	0	0	17		02	27	N	
125	15	3	1	P	I	V	N	N	Y	Y	Y	Y	2	1	0	17	12	02	27	N	
126	16	3	1	P	P	V	N	N	Y	Y	Y	Y	2	2	0	17	12	02	27	N	
127	17	3	5	P	R	V	N	N	Y	Y	N	N	2	5	0	17	12	02	27	N	
GROUP: 128 MOBILE GROUP 10																					
128		3	1	P	F	V	N	N	Y	Y	Y	Y	2	0	0	18		02	27	N	
129	18	3	1	P	I	V	N	N	Y	Y	Y	Y	2	1	0	18	13	02	27	N	
130	19	3	1	P	P	V	N	N	Y	Y	Y	Y	2	2	0	18	13	02	27	N	
131	20	3	5	P	R	V	N	N	Y	Y	N	N	2	5	0	18	13	02	27	N	
GROUP: 129 MOBILE GROUP 11																					
132		3	1	P	F	V	N	N	Y	Y	Y	Y	2	0	0	19		02	27	N	
133	21	3	1	P	I	V	N	N	Y	Y	Y	Y	2	1	0	19	14	02	27	N	
134	22	3	1	P	P	V	N	N	Y	Y	Y	Y	2	2	0	19	14	02	27	N	
135	23	3	5	P	R	V	N	N	Y	Y	N	N	2	5	0	19	14	02	27	N	
GROUP: 130 MOBILE GROUP 12																					
136		3	1	P	F	V	N	N	Y	Y	Y	Y	2	0	0	20		02	27	N	
137	24	3	1	P	I	V	N	N	Y	Y	Y	Y	2	1	0	20	15	02	27	N	
138	25	3	1	P	P	V	N	N	Y	Y	Y	Y	2	2	0	20	15	02	27	N	
139	26	3	5	P	R	V	N	N	Y	Y	N	N	2	5	0	20	15	02	27	N	
GROUP: 131 MOBILE GROUP 13																					
140		3	1	P	F	V	N	N	Y	Y	Y	Y	2	0	0	21		02	27	N	
141	27	3	1	P	I	V	N	N	Y	Y	Y	Y	2	1	0	21	16	02	27	N	
142	28	3	1	P	P	V	N	N	Y	Y	Y	Y	2	2	0	21	16	02	27	N	
143	29	3	5	P	R	V	N	N	Y	Y	N	N	2	5	0	21	16	02	27	N	

Figure 5-1. GSPM (Continued)

PROFILE NUMBER	OLD PROFILE	TERMINAL TYPE	TRAFFIC LOAD CONTROL	SECURITY LEVEL	PRECEDENCE LEVEL	TERMINAL CHARACTERISTICS	MSG SWITCH COMPATIBLE	NET RADIO INTERFACE	PROGRESSIVE CONFERENCE	CALL FORWARDING	COMMERCIAL ACCESS	ESSENTIAL USER BYPASS	COMPRESSED DIALING LISTS	ZONE RESTRICITON	DIRECT ACCESS SERVICE	REKEY ID	OLD RKEY ID	NET ID A	NET ID B	BAR TRUNK ACCESS	BAR CALL
GROUP: 132 MOBILE GROUP 14																					
144		3	1	P	F	V	N	N	Y	Y	Y	Y	2	0	0	22		02	27	N	
145	30	3	1	P	I	V	N	N	Y	Y	Y	Y	2	1	0	22	17	02	27	N	
146	31	3	1	P	P	V	N	N	Y	Y	Y	Y	2	2	0	22	17	02	27	N	
147	32	3	5	P	R	V	N	N	Y	Y	N	N	2	5	0	22	17	02	27	N	
GROUP: 133 MOBILE DATA																					
148	33	3	2	P	F	M	Y	N	N	N	N	Y	0	6	0	23	18	02	27	N	
149	34	3	2	P	I	M	Y	N	N	N	N	Y	0	6	0	23	19	02	27	N	
150	35	3	3	P	P	M	Y	N	N	N	N	Y	0	6	0	23	20	02	27	N	
151	36	3	3	P	R	M	Y	N	N	N	N	N	0	6	0	23	21	02	27	N	
GROUP: 234 DNVT DAS Air Force																					
152		13	1	N	I	V	N	N	N	N	N	Y	0	0	1					N	
153		13	2	N	P	V	N	N	N	N	N	Y	0	0	1					N	
154		13	3	N	R	V	N	N	N	N	N	N	0	0	1					N	
GROUP: 235 DNVT DAS Preferred/Multimode (P/M)																					
155		13	1	P	F	M	N	N	N	N	N	Y	0	0	1					N	
156		13	1	P	I	M	N	N	N	N	N	Y	0	1	1					N	
157		13	1	P	P	M	N	N	N	N	N	Y	0	3	1					N	
GROUP: 236 DNVT DAS Preferred/Voice (P/V)																					
158		13	1	P	F	V	N	N	N	N	N	Y	0	0	1					N	
159	58	13	1	P	I	V	N	N	N	N	N	Y	0	0	1					N	
160		13	1	P	P	V	N	N	N	N	N	Y	0	0	1					N	
GROUP: 237 DNVT DAS Preferred/Voice (P/V)																					
161		13	1	N	FO	V	N	N	Y	Y	Y	Y	1	0	0					N	
162		13	1	N	F	V	N	N	Y	Y	Y	Y	1	0	0					N	
163		13	1	N	I	V	N	N	Y	Y	Y	Y	2	1	0					N	
164		13	2	N	P	V	N	N	Y	Y	Y	Y	3	2	0					N	
165		13	3	N	P	V	N	N	N	N	N	Y	3	2	0					N	
166		13	4	N	R	V	N	N	N	N	N	N	3	3	0					N	
167		13	3	N	R	V	N	N	N	N	N	N	4	3	0					N	
168		13	3	N	R	V	N	N	Y	N	Y	N	4	4	0					N	
169		13	4	N	R	V	N	N	N	N	N	N	4	3	0					N	
170		13	5	N	R	V	N	N	Y	N	N	N	4	3	0					N	
GROUP: 238 DNVT Preferred/Voice (P/V) CD0																					
171		13	1	P	F	V	N	N	Y	Y	Y	Y	0	0	0					N	
172		13	1	P	I	V	N	N	Y	Y	Y	Y	0	1	0					N	
173		13	1	P	P	V	N	N	Y	Y	Y	N	0	3	0					N	
174		13	1	P	P	V	N	N	Y	Y	Y	Y	0	3	0					N	

Figure 5-1. GSPM (Continued)

PROFILE NUMBER	OLD PROFILE	TERMINAL TYPE	TRAFFIC LOAD CONTROL	SECURITY LEVEL	PRECEDENCE LEVEL	TERMINAL CHARACTERISTICS	MSG SWITCH COMPATIBLE	NET RADIO INTERFACE	PROGRESSIVE CONFERENCE	CALL FORWARDING	COMMERCIAL ACCESS	ESSENTIAL USER BYPASS	COMPRESSED DIALING LIST	ZONE RESTRICTION	DIRECT ACCESS SERVICE	REKEY ID	OLD RKEY ID	NET ID A	NET ID B	BAR TRUNK ACCESS	BAR CALL
GROUP: 238 DNVT Preferred/Voice (P/V) CD0 (continued)																					
175		13	1	P	R	V	N	N	Y	Y	Y	N	0	4	0					N	
176		13	2	P	R	V	N	N	N	N	N	N	0	0	0					N	
177		13	2	P	R	V	N	N	N	N	N	N	0	1	0					N	
178		13	2	P	R	V	N	N	N	N	N	N	0	2	0					N	
179		13	4	P	R	V	N	N	N	N	N	N	0	0	0					N	
180		13	4	P	R	V	N	N	N	N	N	N	0	1	0					N	
181		13	4	P	R	V	N	N	N	N	N	N	0	2	0					N	
GROUP: 239 DNVT Preferred/Voice (P/V) CD1																					
182	41	13	1	P	FO	V	N	N	Y	Y	Y	Y	1	0	0					N	
183	42	13	1	P	F	V	N	N	Y	Y	Y	Y	1	0	0					N	
184	43	13	1	P	I	V	N	N	Y	Y	Y	Y	1	1	0					N	
185	44	13	1	P	P	V	N	N	Y	Y	Y	Y	1	2	0					N	
186	45	13	1	P	P	V	N	N	Y	Y	N	Y	1	3	0					N	
187		13	1	P	P	V	N	N	Y	Y	Y	N	1	3	0					N	
188		13	1	P	P	V	N	N	Y	Y	Y	Y	1	3	0					N	
189		13	1	P	R	V	N	N	Y	Y	Y	N	1	4	0					N	
190	46	13	2	P	R	V	N	N	Y	Y	Y	Y	1	4	0					N	
191	47	13	5	P	R	V	N	N	Y	Y	N	N	1	5	0					N	
GROUP: 240 DNVT Preferred/Voice (P/V) CD2																					
192		13	1	P	FO	V	N	N	Y	Y	Y	Y	2	0	0					N	
193	48	13	1	P	F	V	N	N	Y	Y	Y	Y	2	0	0					N	
194	49	13	1	P	I	V	N	N	Y	Y	Y	Y	2	1	0					N	
195	50	13	1	P	P	V	N	N	Y	Y	Y	Y	2	2	0					N	
196	51	13	1	P	P	V	N	N	Y	Y	N	Y	2	3	0					N	
197		13	1	P	P	V	N	N	Y	Y	Y	N	2	3	0					N	
198		13	1	P	P	V	N	N	Y	Y	Y	Y	2	3	0					N	
199	52	13	2	P	R	V	N	N	Y	N	Y	N	2	4	0					N	
200		13	3	P	R	V	N	N	Y	Y	Y	N	2	4	0					N	
201	53	13	5	P	R	V	N	N	Y	N	N	N	2	5	0					N	
GROUP: 241 DNVT Preferred/Voice (P/V) CD3																					
202		13	1	P	F	V	N	N	Y	Y	Y	Y	3	0	0					N	
203		13	1	P	I	V	N	N	Y	Y	Y	Y	3	1	0					N	
204		13	1	P	P	V	N	N	Y	Y	Y	N	3	3	0					N	
205		13	1	P	P	V	N	N	Y	Y	Y	Y	3	3	0					N	
206		13	3	P	R	V	N	N	Y	Y	Y	N	3	4	0					N	

Figure 5-1. GSPM (Continued)

PROFILE NUMBER	OLD PROFILE	TERMINAL TYPE	TRAFFIC LOAD CONTROL	SECURITY LEVEL	PRECEDENCE LEVEL	TERMINAL	MSG SWITCH COMPATIBLE	NET RADIO INTERFACE	PROGRESSIVE CONFERENCE	CALL FORWARDING	COMMERCIAL ACCESS	ESSENTIAL USER BYUPASS	COMPRESSED DIAL LIST	ZONE RESTRICTION	DIRECT ACCESS SERVICE	REKEY ID	OLD RKEY ID	NET ID A	NET ID B	BAR TRUNK ACCESS	BAR CALL
GROUP: 242 DNVT Preferred/Multimode (P/M)																					
207		13	1	P	FO	M	Y	N	N	N	N	Y	0	0	0					N	
208		13	1	P	F	M	Y	N	N	N	N	Y	0	0	0					N	
209	54	13	2	P	F	M	N	N	N	N	N	Y	0	6	0					N	
210			1	P	I	M	Y	N	N	N	N	Y	0	1	0					N	
211	55	13	2	P	I	M	N	N	N	N	N	Y	0	6	0					N	
212		13	1	P	P	M	Y	N	N	N	N	Y	0	3	0					N	
213	56	13	3	P	P	M	N	N	N	N	N	Y	0	6	0					N	
214		13	1	P	R	M	Y	N	N	N	N	N	0	4	0					N	
215		13	2	P	R	M	Y	N	N	N	N	N	0	1	0					N	
216		13	2	P	R	M	Y	N	N	N	N	N	0	2	0					N	
217		13	2	P	R	M	Y	N	N	N	N	N	0	4	0					N	
218		13	2	P	R	M	Y	N	N	N	N	N	0	5	0					N	
219		13	3	P	R	M	Y	N	N	N	N	N	0	4	0					N	
220	57	13	3	P	R	M	N	N	N	N	N	N	0	6	0					N	
221		13	4	P	R	M	Y	N	N	N	N	N	0	1	0					N	
222		13	4	P	R	M	Y	N	N	N	N	N	0	2	0					N	
223		13	4	P	R	M	Y	N	N	N	N	N	0	5	0					N	
GROUP: 243 DNVT Required/Voice (R/V) Air Force CD1																					
224		13	1	R	FO	V	N	N	Y	Y	N	Y	1	0	0					N	
225		13	1	R	F	V	N	N	Y	Y	N	Y	1	1	0					N	
226		13	1	R	I	V	N	N	Y	Y	N	Y	1	1	0					N	
227		13	1	R	P	V	N	N	Y	Y	N	Y	1	1	0					N	
228		13	1	R	R	V	N	N	Y	Y	N	Y	1	1	0					N	
229		13	2	R	R	V	N	N	N	N	N	N	1	3	0					N	
GROUP: 244 DNVT Required/Voice (R/V) Air Force CD2																					
230		13	1	R	F	V	N	N	Y	Y	N	Y	2	1	0					N	
231		13	1	R	I	V	N	N	Y	Y	N	Y	2	1	0					N	
232		13	1	R	P	V	N	N	Y	Y	N	Y	2	1	0					N	
GROUP: 245 DNVT Required/Multimode (R/M) AirForce ADI																					
233		13	1	R	F	M	N	N	N	N	N	Y	0	6	0					N	
GROUP: 246 DNVT Required/Multimode (R/M) Air Force																					
234		13	2	R	I	M	N	N	N	N	N	Y	0	6						N	
235		13	3	R	P	M	N	N	N	N	N	Y	0	6						N	
236		13	3	R	R	M	N	N	N	N	N	N	0	6						N	

Figure 5-1. GSPM (Continued)

PROFILE NUMBER	OLD PROFILE	TERMINAL TYPE	TRAFFIC LOAD CONTROL	SECURITY LEVEL	PRECEDENCE LEVEL	TERMINAL	MSG SWITCH COMPATIBLE	NET RADIO INTERFACE	PROGRESSIVE CONFERENCE	CALL FORWARDING	COMMERCIAL ACCESS	ESSENTIAL USER BYPASS	COMPRESSED DIAL LIST	ZONE RESTRICTION	DIRECT ACCESS SERVICE	REKEY ID	OLD RKEY ID	NET ID A	NET ID B	BAR TRUNK ACCESS	BAR CALL
GROUP: 347 DTA																					
237		15	1	P	FO	D	N	N	N	N	N	Y	0	0						N	
GROUP: 448 LG1																					
238		16	1	P	FO	M	N	N	N	N	N	Y	0	0						N	
GROUP: 549 ALOG/STU CD1																					
239		248	1	N	FO	V	N	N	Y	Y	Y	N	1	0	0					N	
240		248	1	N	F	V	N	N	Y	Y	Y	N	1	0	0					N	
241		248	1	N	I	V	N	N	Y	Y	Y	N	1	0	0					N	
242		248	1	N	I	V	N	N	N	N	N	N	1	1	0					N	
243		248	1	N	P	V	N	N	Y	Y	Y	N	1	0	0					N	
244		248	1	N	P	V	N	N	N	N	N	N	1	3	0					N	
245		248	5	N	R	V	N	N	N	N	N	N	1	5	0					N	
GROUP: 550 ALOG/STU CD2																					
246		248	1	N	F	V	N	N	Y	Y	Y	N	2	0	0					N	
247		248	1	N	I	V	N	N	Y	Y	Y	N	2	0	0					N	
248	59	248	1	N	I	V	N	N	N	N	N	N	2	1	0					N	
249		248	1	N	I	V	N	N	N	N	Y	N	2	1	0					N	
250		248	1	N	P	V	N	N	Y	Y	Y	N	2	0	0					N	
251	60	248	1	N	P	V	N	N	N	N	N	N	2	3	0					N	
252		248	1	N	P	V	N	N	N	N	Y	N	2	3	0					N	
253		248	2	N	R	V	N	N	Y	Y	Y	N	2	0	0					N	
254	61	248	5	N	R	V	N	N	N	N	N	N	2	5	0					N	
255		248	5	N	R	V	N	N	N	N	Y	N	2	5	0					N	

Figure 5-1. GSPM (Continued)

5-34. Profile 238 is used for the RAUs GLU and 237 is used for the DTAs. The other 253 profiles for subscriber equipment contain all five levels of precedence for operation and control purposes. Table 5-4 shows the percentage of precedence category calls a network will contain.

Table 5-4. Percentage of Precedence Category Calls

Percentage	Precedence
0.0%	Flash Override (FO)
0.2%	Flash (F)
4.0%	Immediate (I)
27.8%	Priority (P)
68.0%	Routine (R)

Note: Source is Chairman, Joint Chiefs of Staff Memorandum (CJCSM) Publication 6231.07A series.

5-35. Table 5-5 shows the class marks, which make up a subscriber's profile and the input codes associated with each class mark.

Table 5-5. Class Mark Input Codes

CLASS MARK	VALID INPUTS	INPUT CODES
Terminal Type	DSVT DNVT DTA SCC-2 LG-1 ANALOG	3 13 15 84 16 251
Traffic Load Control	Most Essential More Essential Essential Less Essential Least Essential Not Applicable	1 2 3 4 5 N/A
Security Level	Security Required Security Preferred End-To-End	R P E
Maximum Precedence	Flash Override Flash Immediate Priority Routine	FO F I P R
Terminal Characteristics	Voice Multimode Data	V M D
Message Switch Compatible	Yes No Not Applicable	Y N N/A
NRI	Yes No	Y N
Progressive Conference	Yes No	Y N
Call Forwarding	Yes No	Y N
Commercial Network Access	Yes No	Y N
Essential User	Yes No	Y N

Table 5-5. Class Mark Input Codes (Continued)

CLASS MARK	VALID INPUTS	INPUT CODES
Compressed Dialing List	Not Authorized CD list 1 CD list 2 CD list 3 CD list 4 CD list 5	0 1 2 3 4 5
Zone Restriction	No Restriction ZR list 1 ZR list 2 ZR list 3 ZR list 4 ZR list 5 ZR list 6 ZR list 7 ZR list 8	0 1 2 3 4 5 6 7 8
Direct Access	Yes No	Y N
Rekey	1 - - - 25	1 - - - 25
Net ID A	2 - - - 26	2 - - - 26
Net ID B	27 - - - 51	27 - - - 51
Bar Trunk Access	Yes No	Y N
Bar Call	Yes No	Y N

5-36. The different subscriber terminal types within MSE can include–

- Terminal type 3 (DSVT) – identifies the KY-68 or KY-90.
- Terminal type 13 (DNVT) – a TA-1035/U or a TA-1042 with a data port to provide for data input.

  Note: DNVTs or MSRTs must connect to a switch and have an individual directory number.
- Terminal type 15 (DTA) – allows data to flow to and from the SCC-2.
- Terminal type 248 – an analog circuit.
- Terminal type 16 (GLU) – enables it to receive and distribute frequency plans and manage the eight radios in the RAU.
- Terminal type 84 (SCC-2 network interface device) – provides the four transmit and four receive lines to the network.

5-37. TLC reduces network traffic during busy periods by efficiently using available switching and transmission resources. TLC restricts trunk access and local calling to class marked subscribers. Subscribers should be class marked for one of the five TLC levels shown in Table 5-6. The switch's TLC restrictions rule how the subscriber's TLC class mark is used in the MSE system. Table 5-6 explains how the switch uses class marks.

Table 5-6. TLC Application

TRAFFIC LOAD	SUBSCRIBER CLASS MARK				
CONTROL LEVEL	1	2	3	4	5
3 (TRUNK RESTRICTION)	NO RESTRICTIONS	NO RESTRICTIONS	NO TRUNK CALLS PERMITTED: LOCAL CALLS ONLY (NOTE)	NO TRUNK CALLS PERMITTED (NOTE)	NO TRUNK CALLS PERMITTED (NOTE)
2 (TRUNK RESTRICTION)	NO RESTRICTIONS	NO TRUNK CALLS PERMITTED: LOCAL CALLS ONLY (NOTE)	NO TRUNK CALLS PERMITTED: LOCAL CALLS ONLY (NOTE)	NO TRUNK CALLS PERMITTED: LOCAL CALLS ONLY (NOTE)	NO TRUNK CALLS PERMITTED (NOTE)
5 (SWITCH RESTRICTION)	NO RESTRICTIONS	NO RESTRICTIONS	NO RESTRICTIONS	NO RESTRICTIONS	NO CALLS PERMITTED
4 (SWITCH RESTRICTION)	NO RESTRICTIONS	NO RESTRICTIONS	NO RESTRICTIONS	NO CALLS PERMITTED	NO CALLS PERMITTED

Note: A local- or long-loop subscriber or private branch exchange (PBX) trunk attempting a trunk call is returned a line-busy tone. The call is not completed. Time-out actions on sending a line-busy tone is IAW the specific requirements of the particular loop or trunk. (See individual signaling and supervision appendices for details.) A digital in-band trunk signaling (DIBTS) trunk attempting a call is returned a call incomplete (all trunks busy from tandem switch).

5-38. The three security level class marks are security required (R), security preferred (P), and end-to-end (E). In profile development, only preferred and end-to-end are used.

5-39. Security required is used when a subscriber can only complete calls over secure links to approved loops or to a DSVT.

5-40. Security preferred are calls extended as secure, if possible; otherwise, the call is completed in a nonsecure mode. Most terminals are class marked as security preferred. Security preferred is for access to commercial networks and to the DISN.

5-41. End-to-end applies only to DSVTs. DSVT subscribers can only call other DSVT subscribers.

5-42. All five precedence levels can be assigned. The maximum precedence entry specifies the highest precedence level a subscriber may impose on a call. The national command authority (NCA) and/or the theater commander authorize assigning a particular precedence to a user.

5-43. The terminal characteristics entry specifies subscriber terminal characteristics. The three different terminal characteristics are voice (V), multimode (M), and data (D). NCTs and ABCS computer terminals, such as the MCS terminal, using the DSVT are class marked as data if the DSVT is used with MCS only; otherwise, it is class marked "M" for voice and data. Terminals without communication terminals (CTs) and with facsimile are class marked voice only.

5-44. The MS compatible entry specifies whether a subscriber in the data mode is compatible with the AN/TYC-39 (yes [Y] or no [N], and has access privilege for record traffic users with the CT (AN/UGC-144).

5-45. The NRI entry is only for the KY-90, and all subscribers have access by dialing the KY-90 phone numbers. The NRI is given a precedence to support contingencies.

5-46. The progressive conference entry specifies whether the subscriber is authorized to initiate a progressive conference (Y or N). With this authority, the subscriber may dial the selected subscribers for his conference. A conference call can have a maximum of 14 subscribers. The PCL must be loaded in the switches with subscribers needing this service.

5-47. The call forwarding entry specifies whether the subscriber can forward incoming calls to another terminal (Y or N). Do not confuse call forwarding with call transfer. Call transfer is transferring a connected call to another number and is not an MSE capability.

5-48. The commercial network access entry specifies whether the subscriber is authorized to initiate calls to commercial networks (Y or N).

5-49. The EUB class mark specifies essential users terminated at an NCS or LENS for bypass to another NCS if the subscriber's parent NCS cannot provide call processing because of processor failure (Y or N).

5-50. Compressed dialing lists (CDLs) allow selected subscribers to quickly dial frequently called people. The compressed dialing entry specifies whether the subscriber is authorized to use the compressed dialing feature. A zero shows that the subscriber cannot use compressed dialing. A digit (1-5) indicates that the subscriber can call anyone on the same CDL. There are five compressed dialing lists each containing up to 80 subscribers. Each entry is assigned a number between 20 and 99, which then becomes the compressed dialing number. Figure 5-2 shows a CDL.

5-51. Zone restriction lists (ZRLs) may be permissive or restrictive. ZRLs either allow a subscriber access to anywhere in the network or restrict access to certain areas. The restrictive list is for routine users only and limits them to calls within the corps network. Changes to this list are made at the NPT and sent by technical message to the NCS/LENS.

5-52. MSE wire subscribers may be class marked for direct access service (DAS). An NCS or LENS can have up to 60 assigned subscribers, and a SENS can have up to 10 subscribers. DAS can be assigned as a paired operation, where subscriber A can only call subscriber B and vice versa. DAS can also be assigned as a one-way operation, where subscriber A can only call subscriber B, but subscriber B can call any MSE subscriber. One-way operation is mainly used; it can also be used as the initiator of a preprogrammed conference. When a DAS subscriber initially connects to a switch, he must contact the switch operator and provide the directory number to which he desires direct access. Once the operator programs the switchboard, service is automatically provided. When the subscriber no longer requires DAS, he must contact the switch operator to disconnect this service.

5-53. The rekey ID 1 entry is valid with wireline DSVT-like devices only. Rekey IDs 2-23 are used for MSRTs only. Rekey IDs 24 and 25 are not assigned in the GSPM 255. Each ID (1-25) identifies the rekey variable of a DSVT-like net (recommended maximum of 90 terminals).

- Net IDs A and B are not used.
- Bar truck access and bar call were added with the GSPM 255.
- The network manager must use the GSPM 255 to assign profiles to subscribers.

Note: The NPT using the PBOOKII software application supports both the 63 and the 255 profile matrix. The subscriber list management (SLM) application of the NPT can manage the subscriber database, including the PAL, CDL, and ZRL.

COMPRESSED DIALING LIST	1 OF 5		
UNIT: 1st DIV		POC: SGT Lane	PHONE: 791-1600
COMPRESSED DIALING NUMBER	DIRECTORY NUMBER	COMPRESSED DIALING NUMBER	DIRECTORY NUMBER
20	3401019	70	
21	3401389	71	
22	4601019	72	
23	4401019	73	
24	4201019	74	
25	4202019	75	
26		76	
27		77	
28		78	
29		79	
30		80	
31		81	
32		82	
33		83	
34		84	
35		85	
36		86	
37		87	
38		88	
39		89	
40		90	
41		91	
42		92	
43		93	
44		94	
45		95	
46		96	
47		97	
48		98	
49		99	
50			THIS FORM MAY BE REPRODUCED
51			TO DEVELOP UP TO FIVE LISTS.
52			
53			
54			
55			
56			
57			
58			
59			
60			
61			
62			
63			
64			
65			
66			
67			
68			
69			

SAMPLE

Figure 5-2. CDL

PREPROGRAMMED CONFERENCE LIST REQUIREMENTS

5-54. Authorized PCL members can initiate a conference call with members of the PCL list (Figure 5-3). There can be a total of 20 PCLs numbered from 20 to 39, and each list can contain up to 14 subscribers. It is also possible to have four PCLs with a maximum of five subscribers each if there are enough bridge terminal cards in service at the switch. At the top of each list, **YES** or **NO** is circled to indicate whether security is required for the conference list. A **YES** entry requires a loop key generator (LKG) per instrument per call. Each DSVT/MSRT (whether security is circled YES or NO) requires an LKG per instrument per call. Therefore, the standard for programmed conferences should be DNVT telephone numbers and a security **NO** entry. Multiple conferences outside the standard will degrade service at the NCS.

	PREPROGRAMMED CONFERENCE LIST 31 OF 39	
UNIT: 1st DIV	POC: SGT Lane PHONE: 791-1600	
SECURITY REQUIRED		
(YES OR (NO))		
ENTRY	DIRECTORY	SUBSCRIBER AUTHORIZED
NUMBER	NUMBER	TO INITIATE CONFERENCE
		(YES OR NO)
1	3401019	YES
2	3401389	YES
3	4601019	NO
4	4401019	NO
5	4201019	NO
6	4202019	NO
7		
8		
9		
10		
11		
12		
13		
14		
	The preprogrammed conference lists	
	must be numbered from 20 to 39.	
	This form may be reproduced to develop	
	up to 20 lists.	

SAMPLE

Figure 5-3. PCL

5-55. There are 20 corps common PCLs numbered 20 through 39. Only coordination with and approval of the corps signal office can change these PCLs. Any temporary change for a particular exercise does not require a change to the tactical standing operating procedure (TSOP), but it does require updating a work sheet for that period. Table 5-7 shows an example of the corps PCL assignment.

Table 5-7. Example of the Corps PCL Assignment

Preprogrammed Conference List	Used For
20 21	Corps Command
22 23	Corps Administrative/ Logistics
24 25	Corps Operations
26 27	Corps Support Command (COSCOM)
28 29	Corps Reserved
30	1st Division
32 33	2d Division
34 35	3d Division
36 37	4th Division
38 39	5th Division

TEAM LABEL DATA FILE REQUIREMENTS

5-56. The US Army Signal Center enters team label data into the team label data file (TLDF). The signal organization network manager or PAL manager for that database validates the TLDF. All teams are included in the TLDF. All MSE signal teams are assigned team labels according to the global team labeling scheme (Figure 5-4.) Table 5-8 shows the resulting corps standard team designation chart, which is used for team C2. Table 5-9 shows an example of the 1st Division's team labels.

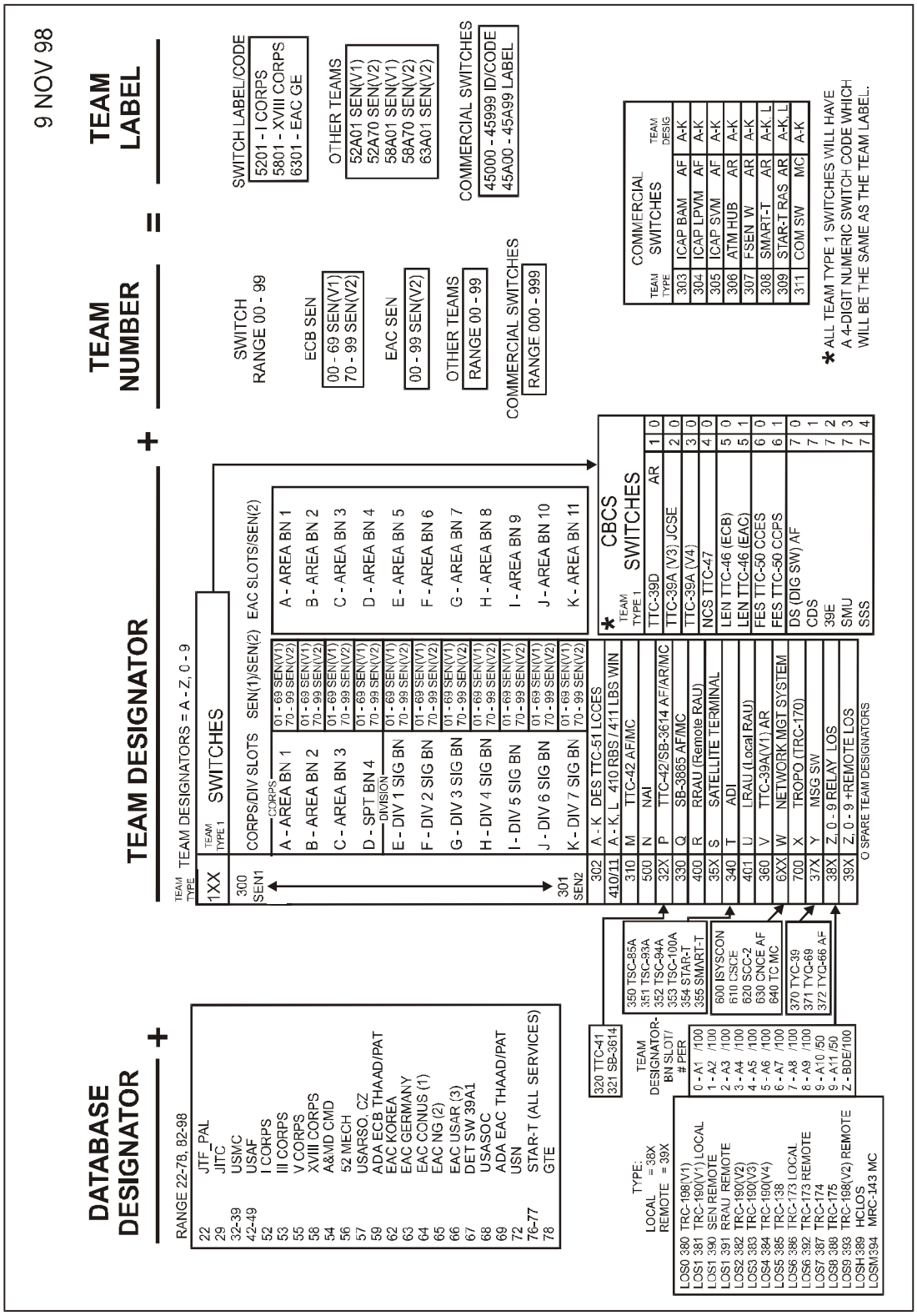

Figure 5-4. Global Team Labeling Scheme

Table 5-8. Corps Global Standard Team Designation Chart

CORPS AREA SIGNAL BN TEAM LABELS AND SLOTS	DIVISION SIGNAL BN TEAM LABELS AND SLOTS
DB01-DB09 DBA01 DB10-DB19 DBA02 DB20-DB29 DBA03 DB30-DB39 DBA04	DB40-DB49 DBD01 DB50-DB59 DBD02 DB60-DB69 DBD03 DB70-DB79 DBD04 DB80-DB89 DBD05 DB90-DB94 DBD06 DB95-DB99 DBD07
Note: SENs are designated with a letter team designator (A-K).	
AREA BN SLOTS: DBA01-DBA69 SEN(V1) DBA01 DBA70-DBA99 SEN(V2) DBB01-DBB69 SEN(V1) DBA02 DBB70-DBB99 SEN(V2) DBC01-DBC69 SEN(V1) DBA02 DBC70-DBC99 SEN(V2) DBD01-DBD69 SEN(V1) DBA04 DBD70-DBD99 SEN(V2)	DIVISION BN SLOTS: DBE01-DBE69 SEN(V1) DBD01 DBE70-DBE99 SEN(V2) DBF01-DBF69 SEN(V1) DBD02 DBF70-DBF99 SEN(V2) DBG01-DBG69 SEN(V1) DBD03 DBG70-DBG99 SEN(V2) DBH01-DBH99 SEN(V1) DBD04 DBH70-DBH99 SEN(V2) DBI01-DBI69 SEN(V1) DBD05 DBI70-DBI99 SEN(V2) DBJ01-DBJ69 SEN(V1) DBD06 DBJ70-DBJ99 SEN(V2) DBK01-DBK69 SEN(V1) DBD07 DBK70-DBK99 SEN(V2)
Note: The LEN section is combined with the NCS section.	
Note: Remote radio access units (RRAUs) are designated with an R -Team designator, and local radio access units (LRAUs) are designated with a U -Team designator.	
RRAU: DBR01-DBR09 DBA01 DBR10-DBR19 DBA02 DBR20-DBR29 DBA03 DBR30-DBR39 DBA04 **LRAU:** DBU01-DBU09 DBA01 DBU10-DBU19 DBA02 DBU20-DBU29 DBA03 DBU30-DBU39 DBA04	**RRAU:** DBR40-DBR49 DBD01 DBR50-DBR59 DBD02 DBR60-DBR69 DBD03 DBR70-DBR79 DBD04 DBR80-DBR89 DBD05 DBR90-DBR94 DBD06 DBR95-DBR99 DBD07 **LRAU:** DBU40-DBU49 DBD01 DBU50-DBU59 DBD02 DBU60-DBU69 DBD03 DBU70-DBU79 DBD04 DBU80-DBU89 DBD05 DBU90-DBU94 DBD06 DBU95-DBU99 DBD07
Note: Refer to the global team labeling scheme for details on the team labels for local LOSs. Both are designated with 0-9, Z-Team designators.	
Note: NATO interface teams, LOS(V2)s with NAI are designated with N -Team designators DBN01-DBN99.	
Note: Network management systems (SCC-2/ISYSCON, CSCE) are designated with a W-Team designator.	

Table 5-9. Example of the 1st Division's Team Labels

Team Name	Team Label	Team Label
NCS	DB40	DB42
SEN(V1)	DB41	DB43
SEN(V1)	DBE11	DBE31
SEN(V1)	DBE21	DBE41
SEN(V2)	DBE12	DBE32
RRAU	DBE22	DBE42
LRAU	DBE13	DBE33
TST (TACSAT)	DBE23	DBE43
TRT (TROPO)	DBE71	DBE73
LOS (LOS1-LOS8)	DBE72	DBE74
	DBR40	DBR42
	DBR41	DBR43
	DBU40	DBU42
	DBU41	DBU43
	DBS41	DBS41
	DBS43	DBS43
	DBX41	DBX41
	DBX43	DBX43
	DB441	DB441
	DB443	DB443
Signal Support	**Company C**	
LEN	DB44	
RRAU	DBR44	
LOS	DB444	
TST (TACSAT)	DBS44	
TRT (tropo)	DBX44	

MSE FREQUENCY MANAGEMENT REQUIREMENTS

5-57. MSE is the primary element of the ACUS, and its frequency management is an important task on the force-projection battlefield. However, it is only part of the total frequency management process. Both the CNR system and the ADDS also require frequency management support. These three systems are not mutually exclusive. The NPT provides an effective capability to manage the frequency spectrum for all three communications systems, while ensuring that the corps and its associated divisions can engage in a combat situation with minimum frequency interference. The NPT uses authorized frequencies obtained by the frequency manager to support VHF, UHF, and SHF spectrum requirements. The NPT tactical frequency assignment model (TACFAM) application develops frequency assignments for LOS radio links and performs link and site engineering and deconfliction based on selected parameters. Table 5-10 shows the number of MSE emitters in the corps AO. Table 5-11 shows the NPT frequency management capabilities.

Table 5-10. Number of MSE Emitters

Element	Number of MSE Emitters
RAU	736
MSRT	1900
LOS Node Center	504
LOS (Extension Node/RAU)	554
LOS (EAC/NATO/MISC)	12
SHF	428

Table 5-11. NPT Frequency Management Capabilities

Radio Equipment	Frequency Assignment
LOS Radio, AN/GRC-226(V) (VHF)	• One set of frequencies per LOS radio link • Two frequency plans • Two frequency bands: ▪ 225.0 to 400.0 MHz ▪ 1350 to 1850 MHz
Radio, AN/GRC-224(P) (SHF)	• One set of frequencies per SHF radio link • One frequency plan (14.50 to 15.35 GHz) • Frequency subband L and M
Mobile Subscribers, RT-1539(P)/G (VHF)	• One active frequency plan per corps • Up to 96 sets of frequencies per plan (3 subplans of 32 sets) • One frequency band (30 to 88 MHz) OCONUS • Two frequency bands: ▪ 30-50 MHz (training) ▪ 30-88 MHz (operations)

5-58. The NPT VHF planning/management application uses the VHF input to develop the RAU/MSRT frequency plan. Coordination is then made with the system planner for distributing the frequency plan throughout the corps. The Revised Battlefield Electronics Communications-Electronics Operating Instructions (CEOI) System (RBECS) is the primary SOI management tool.

FREQUENCY MANAGEMENT PARAMETERS

5-59. The following paragraphs cover UHF parameters, SHF parameters, and LOS antenna polarization.

UHF PARAMETERS

5-60. The UHF radio (AN/GRC-226) operates in two frequency bands. Band I is known as Band A and covers the frequency range from 225 to 400 MHz. Band III is known as Band B and covers the frequency range from 1350 to 1850 MHz. The SCC-2 system manager(s) select(s) the appropriate frequency band when preparing the open LOS radio link project.

Signal-to-Interference Ratio

5-61. Table 5-12 provides AN/GRC-226 signal-to-interference ratios. This data represents operation at the highest (1,024 kbps) data rate. The data assumes a signal level at the terminal to the receiver unit at -88 dBm. Signal-to-interference ratios corresponding to various frequency separations between the received signal and the interference signal are given. The data applies to operation in either frequency Band I or III, respectively.

Table 5-12. AN/GRC-226 Radio Signal-to-Interference Ratio

Signal-to-Interference Frequency Spacing (MHz)	Signal-to-Interference Radio Limitation[1] (dB)
0	±21
±1.0	±16
±2.0	-1
±3.0	-36
±9.0	-70 (and lower)

[1] **+ Means signal power > interference power.**
- Means signal power < interference power.

Cable Loss Value

5-62. The following transmit and receive cable loss values represent the maximum attenuation for each of the two frequency bands.

- At 400 MHz 3.5 dB.
- At 1850 MHz 8.5 dB.

5-63. If frequency scaling is used within the computer program, the following adjustment factors can be used:

- Within the 225 to 400 MHz band, cable attenuation increases at 1.25 dB/octave from a minimum of 2.4 dB at 225 MHz to a maximum of 3.5 dB at 400 MHz.
- Within the 1350 to 1850 MHz band, cable attenuation increases at 3.0 dB/octave from a minimum of 6.5 dB at 1350 MHz to a maximum of 8.5 dB at 1850 MHz.

5-64. Otherwise, the maximum values given above are used throughout the respective bands.

Receiver Sensitivity

5-65. The minimum receiver sensitivity for each of the two frequency bands is–

- 225 to 400 MHz -90 dBm.
- 1350 to 1850 MHz -89 dBm.

These values represent performance limits for the maximum data rate used. The maximum energy delivered by the transmitter for each of the two frequency bands is–

- 225 to 400 MHz band, +10 dBw at 1024 kbps.
- 1350 to 1850 MHz band, +7 dBw at 1024 kbps.

SHF PARAMETERS

5-66. The SHF radio AN/GRC-224(P) operates in a single frequency band. This band is 14,500 to 15,341 MHz and is divided into eight subbands. The subbands are paired to each other for the assignment of transmit and receive frequencies. The frequency manager selects the SHF frequency band when preparing the open LOS radio link project. Table 5-13 shows SHF and channel allocations for bands L and M. Band L is assigned to switches and Band M is assigned to LOS radio terminals. The following values characterize the performance of the SHF radio relative to the system communications margin computation.

- Maximum transmitter power at the antenna, operating at 4,096 kbps: +13 dBm.
- Transmitter and receiver are located directly at the antenna; therefore, no cable loss.
- Receiver sensitivity, operating at 4,096 kbps: -77 dBm. No quantitative data is available on the SHF radio's signal-to-interference performance. Table 5-14 shows estimated SHF radio signal-to-interference ratios. This estimated data is used until more accurate data can be provided.

LOS ANTENNA POLARIZATION

5-67. The antennas can operate at either vertical or horizontal polarization. The NPT selects the antenna polarization for each LOS radio link by either an automatic or a manual mode.

Table 5-13. SHF Bands L and M Frequency (in MHz) and Channel Allocations

Band L Channel Frequency		Band M Channel Frequency	
01	14648.0	01	15033.0
02	14651.5	02	15036.5
03	14655.0	03	15040.0
04	14658.5	04	15043.5
05	14662.0	05	15047.0
06	14665.5	06	15050.5
07	14669.0	07	15054.0
08	14672.5	08	15057.5
09	14676.0	09	15061.0
10	14679.5	10	15064.5
11	14683.0	11	15068.0
12	14686.5	12	15071.5
13	14690.0	13	15075.0
14	14693.5	14	15078.5
15	14697.0	15	15082.0
16	14700.5	16	15085.5
17	14704.0	17	15089.0
18	14707.5	18	15092.5
19	14711.0	19	15096.0
20	14714.5	20	15099.5
21	14718.0	21	15103.0
22	14721.5	22	15106.5
23	14725.0	23	15110.0
24	14728.5	24	15113.5
25	14732.0	25	15117.0
26	14735.5	26	15120.5
27	14739.0	27	15124.0
28	14742.5	28	15127.5
29	14746.0	29	15131.0
30	14749.5	30	15134.5
31	14753.0	31	15138.0
32	14756.5	32	15141.5
33	14760.0	33	15145.0
34	14763.5	34	15148.5
35	14767.0	35	15152.0
36	14770.5	36	15155.5
37	14774.0	37	15159.0
38	14777.5	38	15162.5
39	14781.0	39	15166.0
40	14784.5	40	15169.5
41	14788.0	41	15173.0
42	14791.5	42	15176.5
43	14795.0	43	15180.0
44	14798.5	44	15183.5
45	14802.0	45	15187.0
46	14805.5	46	15190.5
47	14809.0	47	15194.0
48	14812.5	48	15197.5
49	14816.0	49	15201.0

Table 5-14. Estimated SHF radio signal-to-interference limitations

Signal-to-Interference Frequency Spacing (MHz)	Signal-to-Interference Radio Limitation[1] (dB)
0	±21
± 4.0	±16
± 8.0	-1
±12.0	-36
±36.0	-70 (and lower)

[1] **+ Means signal power > interference power.**
- Means signal power < interference power .

Chapter 6

Contingency Communications Package and the Light Contingency Communications Package

The CCP and the light CCP (LCCP) improves the operational capability and flexibility of the MSE network to support contingency missions. Airborne, air assault, light forces, and early entry TMD assets conduct these missions. The CCP and LCCP have the capabilities and functions of several standard MSE shelters. The CCP can deploy by air, land, or sea. The LCCP deploys with its supported force into the operational area by air transport. This chapter covers the battalion structure, equipment capabilities, and deployment of the CCP and the LCCP.

DOCTRINAL IMPACTS

6-1. Standard MSE configurations exceed air-sortie allocations, and area communications requirements exceed single-channel radio capabilities. Therefore, the CCP and the LCCP can support airborne, air assault, light forces, and early entry TMD assets in entry operations. The CCP and LCCP can deploy to operational areas as predesigned support packages in up to two C-141 sorties or C-130 equivalents. The CCP and LCCP provide connectivity to the sustaining base from the entry position via multichannel TACSAT within one-half hour of deployment. The CCP and LCCP also allow interconnectivity to a second CCP or LCCP at a different entry position using LOS links if possible and satellite if not.

6-2. Each CCP or LCCP can support a task force CP/airfield and maneuver brigade headquarters to include the brigade main and jump CPs. At the task force CP/airfield, signal support provides parent switching with static and mobile subscriber access and NRI. Additional signal support provides multichannel TACSAT connectivity to the sustaining base or other task force CPs. At the brigade headquarters, signal support provides extension switching, mobile subscriber access, and NRI and LOS connectivity.

DIVISION SIGNAL BATTALION STRUCTURE

6-3. Under the CCP or LCCP concept, the division signal battalion is reconfigured as follows:

6-4. The HHC and A Company retain their standard MSE table(s) of organization and equipment (TOE).

6-5. B Company, Contingency Area Communications Company, consists of a headquarters platoon, one standard nodal platoon, and one contingency nodal platoon (one CCP). The CCP consists of one contingency communications

parent switch (CCPS) and two contingency communications extension switches (CCESs) called FESs.

6-6. C Company, Signal Support Company (MSE), Airborne/Air Assault, consists of a headquarters platoon, one standard nodal platoon, one multichannel TACSAT platoon, and four FM retransmission teams normally associated with the Light Forces Signal Support Company (MSE).

6-7. The reconfigured MSE CCP and LCCP replace existing MSE assemblages within the division signal battalion.

6-8. The CCP in the airborne division replaces–

- One LENS.
- One NCS.
- Four SENSs.
- Three RAUs.
- Six LOS(V1)s.
- Four LOS(V3)s.
- One LOS(V4).

6-9. The LCCP in the light division replaces–

- One LENS.
- One NMF.
- One LEN support vehicle.
- One RAU.
- One LOS(V1).
- One LOS(V4).

6-10. Basis of allocation for the CCP is four CCPs to the XVIII Airborne Corps (35th Signal Brigade) and two CCPs each to the 82d Airborne Division (82d Signal Battalion) and the 101st Air Assault Division (501st Signal Battalion). The CCP consists of–

- One CCPS (communications central (with LTU), AN/TTC-50).
- Two CCESs (communications central (without LTU), AN/TTC-50).
- One dismounted extension switch (DES) (communications switching set, AN/TTC-51).
- Two AN/TRC-198(V1)s (similar to an LOS(V3)).
- Two dismounted LOS (DLOS) AN/TRC-198(V2)s.

6-11. Basis of allocation for the LCCP is two LCCPs each to the selected light infantry division signal battalions (10th and 125th). The LCCP consists of–

- One parent switch (communications central, AN/TTC-50).
- Two DESs (communications switching set, AN/TTC-51).
- Two LOS AN/TRC-198(V1)s.
- Four DLOS AN/TRC-198(V2)s.

EQUIPMENT CAPABILITIES

6-12. The CCPs can support local switching, tandem trunking, flood search routing, and database maintenance for extension switches and RAUs.

6-13. At the task force CP/airfield, the CCP can support 12 local RAU subscribers, 117 local wire subscribers, 8 defense switching networks (DSNs) or 8 commercial access trunks, and 7 packet switch hosts.

6-14. At the brigade headquarters, the CCP can support 15 local RAU subscribers, 47 local wire subscribers, 8 DSNs or 8 commercial access trunks, and 7 packet switch hosts.

6-15. The CCP and LCCP are fully interoperable with other MSE systems. Two C-141B aircraft sorties can transport each CCP or LCCP.

DEPLOYMENT

6-16. The following paragraphs cover CCP and LCCP deployment.

CCP INITIAL DEPLOYMENT

6-17. As the CCP initially deploys, connectivity is maintained to the sustaining base, to an adjacent CP/airfield if present, and to a brigade headquarters. Connectivity to the sustaining base is maintained through multichannel TACSAT. Connectivity to the adjacent CP/airfield is maintained through LOS multichannel or through multichannel TACSAT. As the brigade headquarters deploys, connectivity is maintained through the DLOS. (See Figure 6-1.)

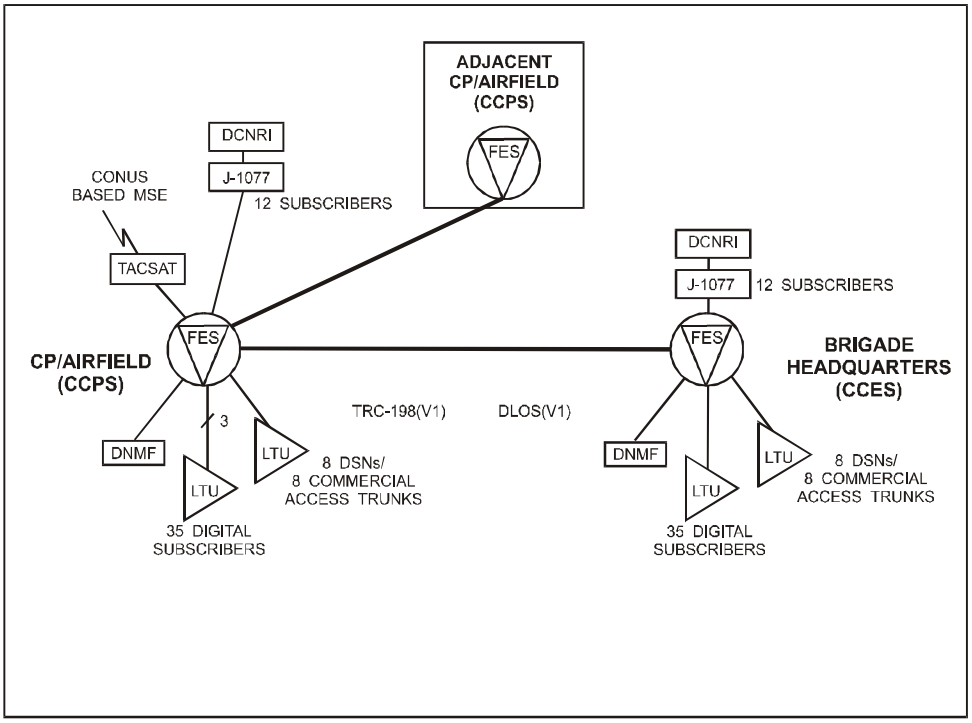

Figure 6-1. CCP Initial Deployment

CCP FULL DEPLOYMENT

6-18. As the network matures, the CCP supports the deployed brigade headquarters and a jump brigade headquarters and maintains connectivity to an adjacent CP/airfield and to the sustaining base. Connectivity to the adjacent airfield is supported by another CCP and maintained through LOS if possible. Connectivity to the sustaining base is maintained through multichannel TACSAT. (See Figure 6-2.)

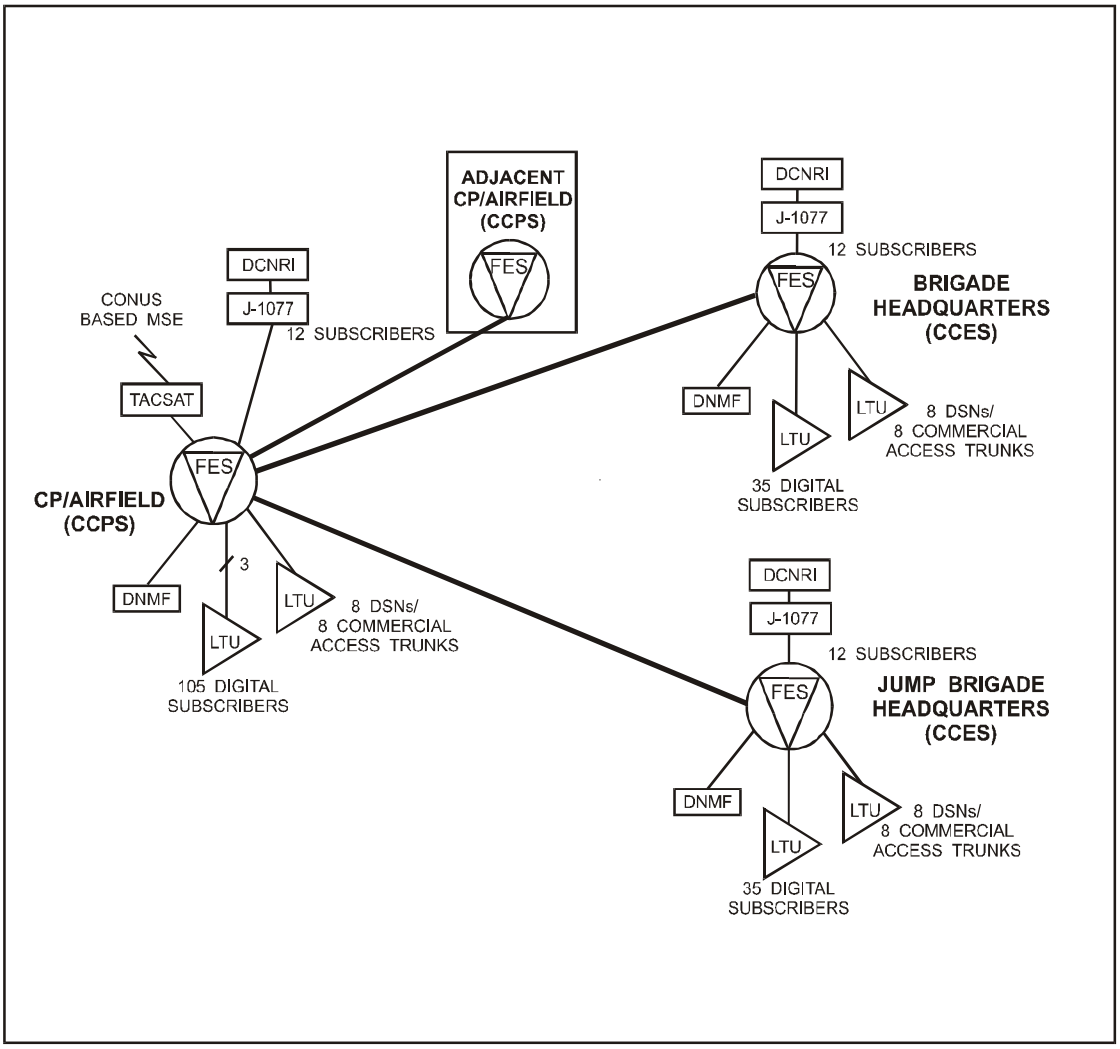

Figure 6-2. CCP Full Deployment

CCP CONVENTIONAL MISSION

6-19. In a conventional entry operations mission, the MSE CCP maintains connectivity to two NCs and two brigade headquarters. Connectivity is maintained using LOS multichannel communications. (See Figure 6-3.)

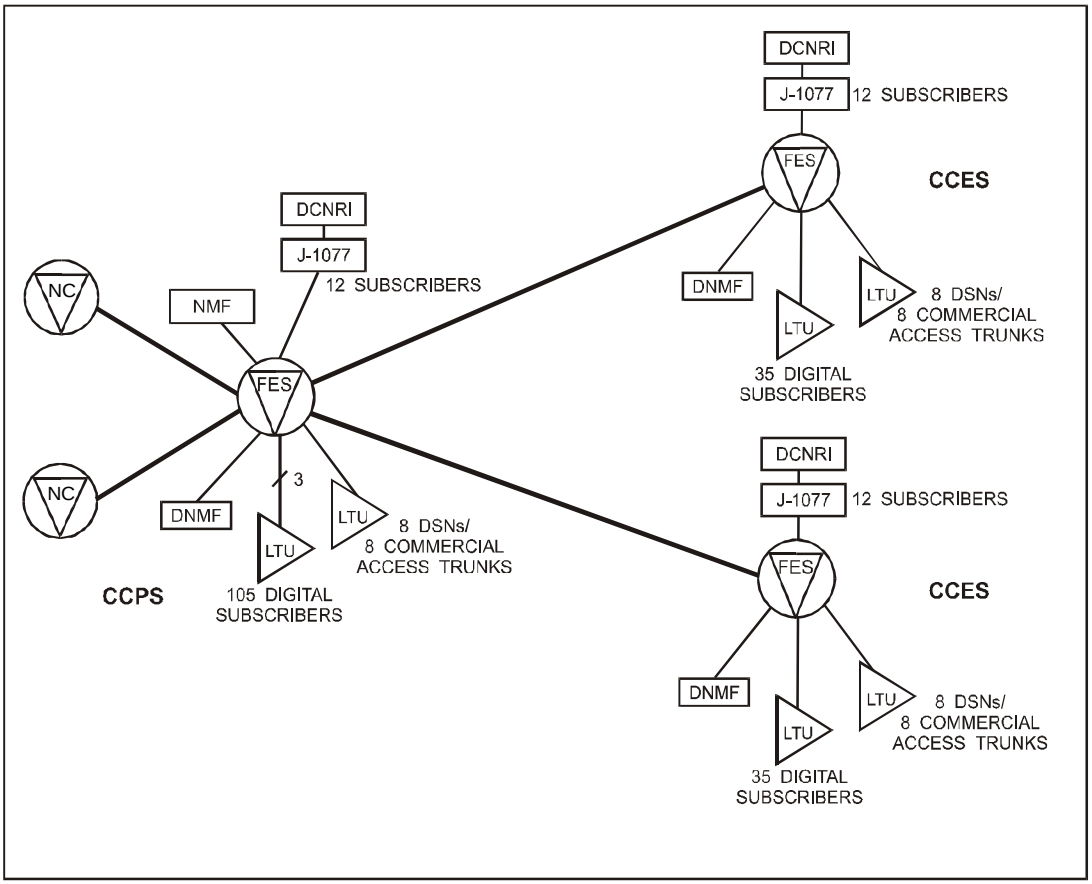

Figure 6-3. CCP Conventional Mission

LCCP INITIAL DEPLOYMENT

6-20. As the LCCP initially deploys, connectivity is maintained to the sustaining base, to an adjacent CP/airfield if present, and to a brigade headquarters. Connectivity to the sustaining base is maintained through multichannel TACSAT. Connectivity to the adjacent CP/airfield is supported by another CCP and maintained through LOS multichannel or through multichannel TACSAT. As the brigade headquarters deploys, connectivity is maintained through the DLOS to the DES. LOS is also used to maintain connectivity to a RAU at the brigade headquarters. (See Figure 6-4.)

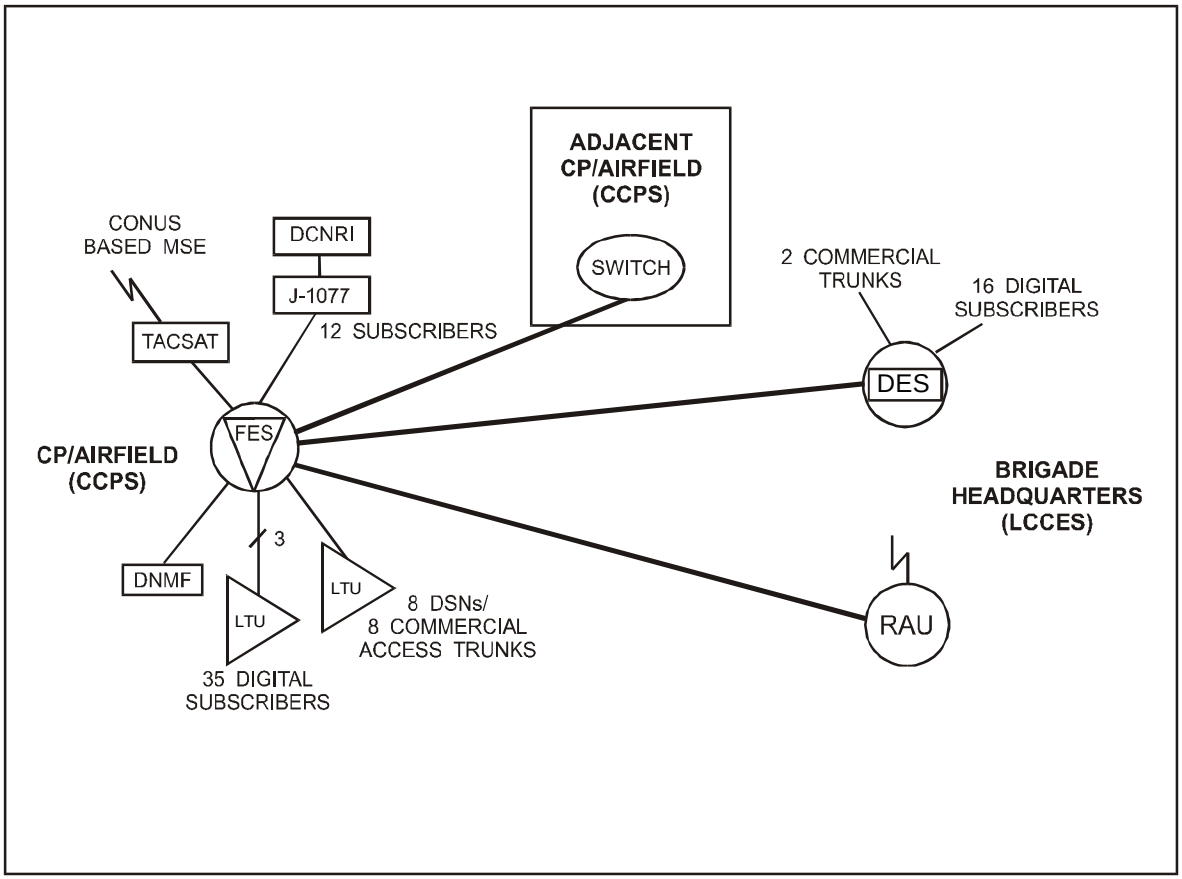

Figure 6-4. LCCP Initial Deployment

LCCP FULL DEPLOYMENT

6-21. As the network matures, the CCPS supports two deployed brigade headquarters and two RAUs, located at the brigade headquarters, and maintains connectivity to an adjacent CP/airfield and to the sustaining base. Connectivity to the adjacent airfield is supported by another CP and maintained through LOS if possible. Connectivity to the sustaining base is maintained through multichannel TACSAT. Connectivity to the brigade headquarters is maintained through LOS terminals at the CP/airfield and through the DES at the brigade headquarters. (See Figure 6-5.)

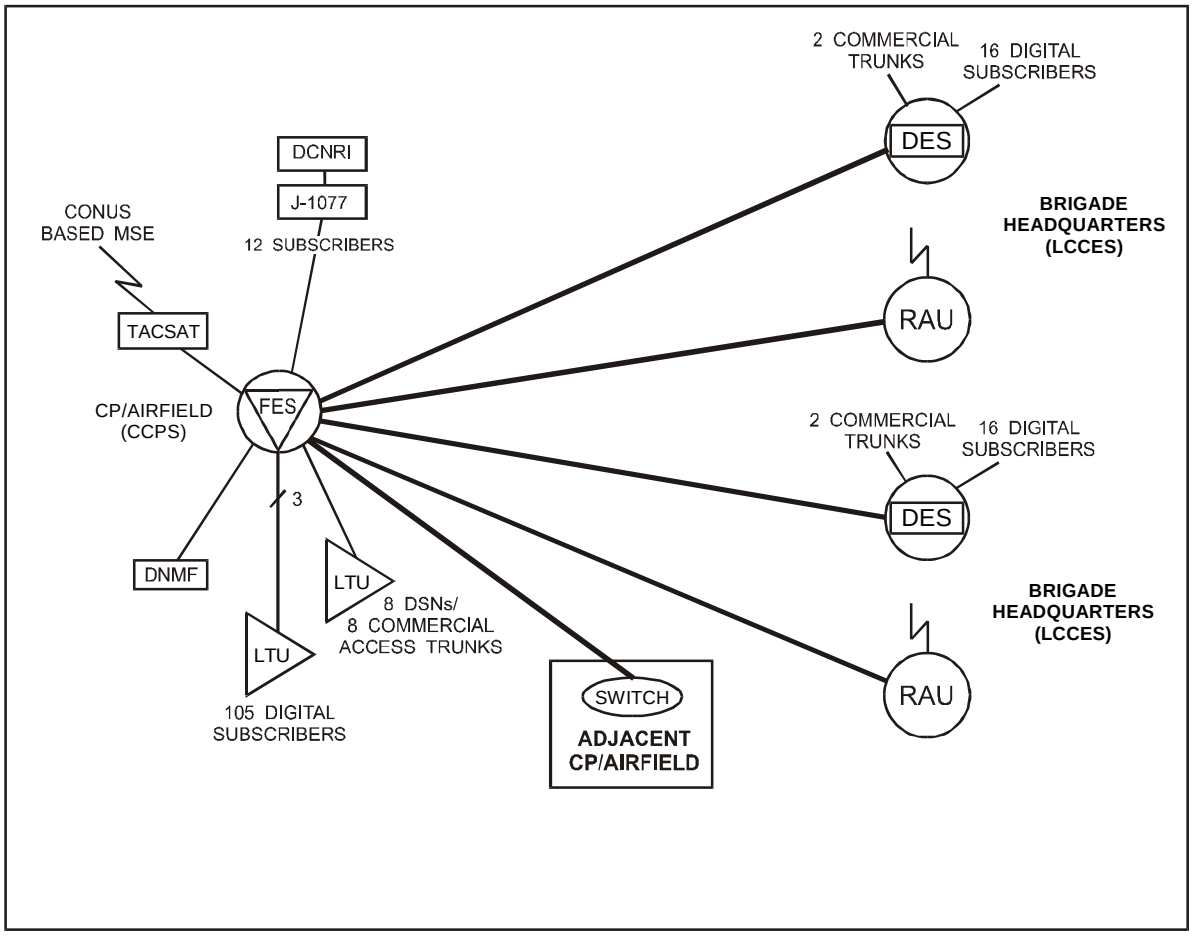

Figure 6-5. LCCP Full Deployment

LCCP CONVENTIONAL MISSION

6-22. In a conventional MSE mission, the CCP maintains connectivity to two NCs and two brigade headquarters. Connectivity is maintained using LOS multichannel communications. (See Figure 6-6.)

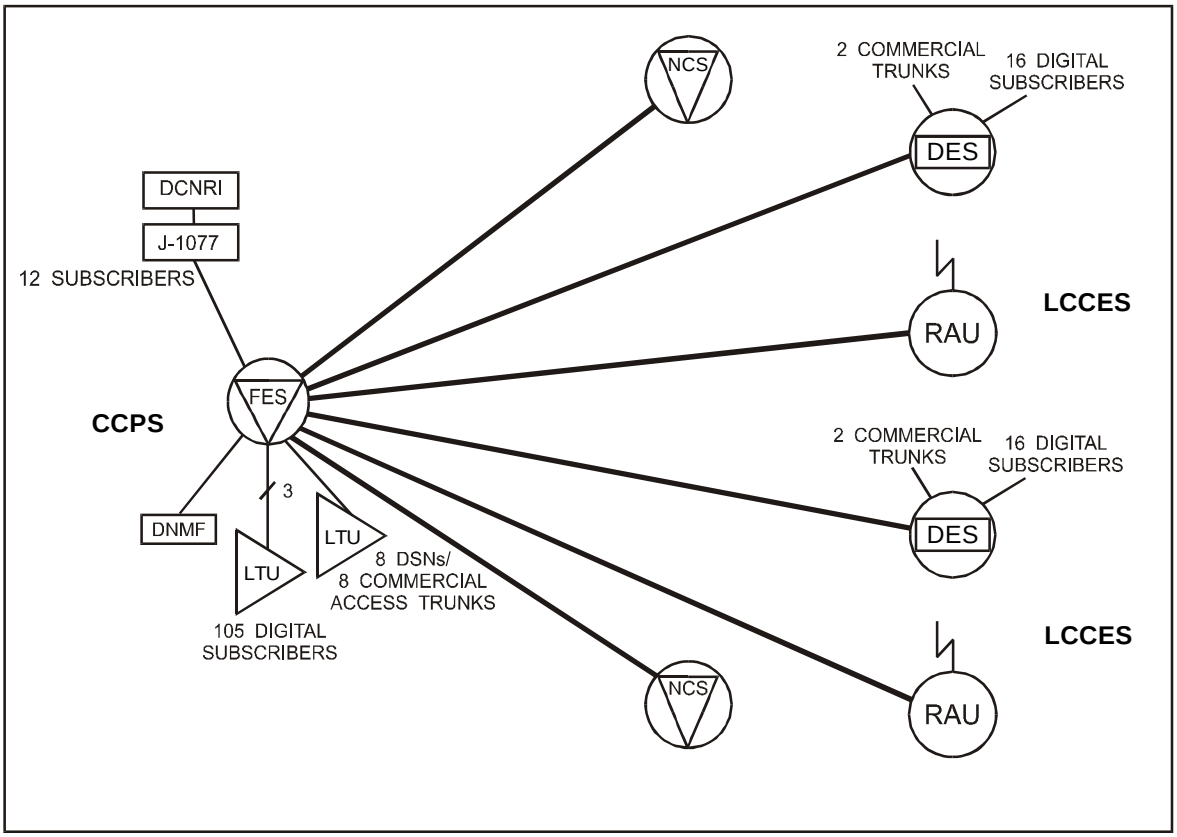

Figure 6-6. LCCP Conventional Mission

Chapter 7

Tactical Packet Network

This chapter introduces packet switching and covers the Army TPN architecture which contains the network's hardware and software. It also covers TPN employment and management.

PACKET SWITCHING NETWORK

7-1. Packet switching is a standard for interconnecting many computers. (See Figure 7-1.) Packet switching transmits data from one location (host) to another, just as circuit switching transmits voice from one location to another. Packet switching breaks the data into small packets with addresses and routes each packet to its destination through the network across the quickest and shortest path. The packet switching network uses the established paths of the circuit switch network rather than engineering the same links. Dedicating some trunk group channels to packet switching allows the packet switching network to take advantage of alternative path routing.

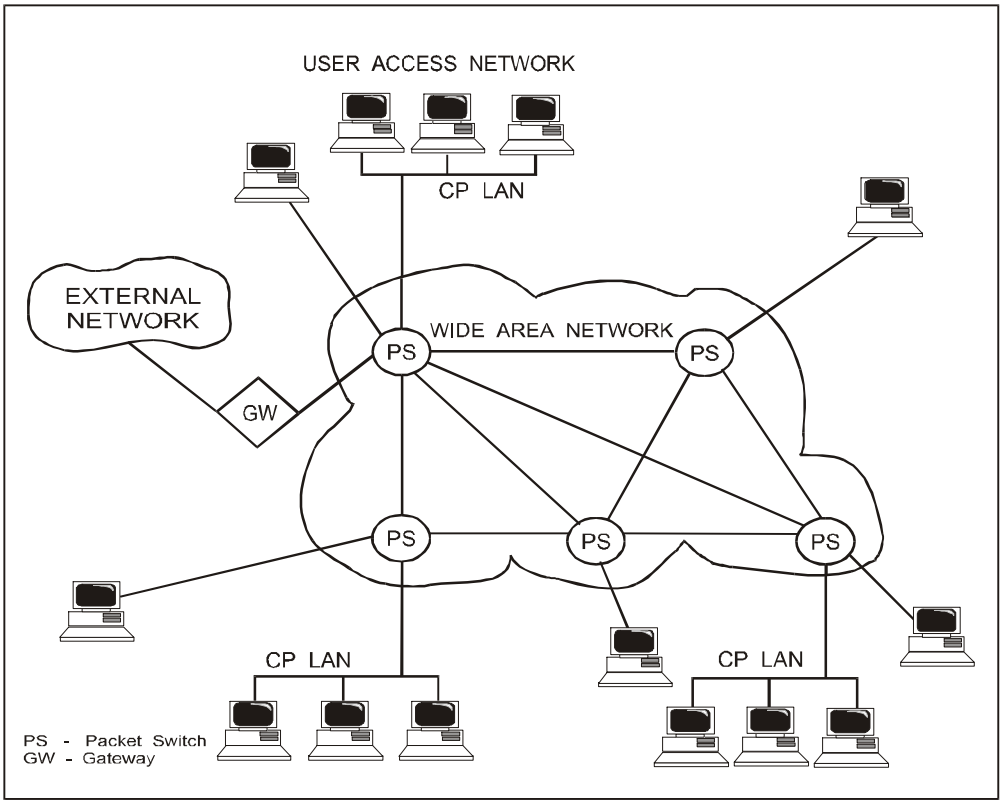

Figure 7-1. TPN Overview

TACTICAL PACKET NETWORK ARCHITECTURE

7-2. The TPN includes packet-switching overlays to the MSE circuit switched network at ECB and EAC. The MSE overlay at ECB (the MPN) and the TRI-TAC packet overlay at EAC are basically identical and comprise the Army TPN. Typically, a data system must have four essential items to take advantage of the packet network capabilities. These are–

- A physical interface.
- Department of Defense (DOD) standard protocols.
- Tactical name server (TNS) registration software.
- A user application program written with packet access in mind.

7-3. The MPN is implemented with packet switches in the NC, SEN, LEN, FES, and NMT. The EAC packet overlay is implemented with packet switches in the TTC-39Ds, SENS, and LENS. An NMC manages the network. It is installed in the NMT at ECB and collocated with the CSCE at EAC. Other major components include the interworking gateways and the TNS/message transfer agent (MTA). Figure 7-2 shows the TPN WAN.

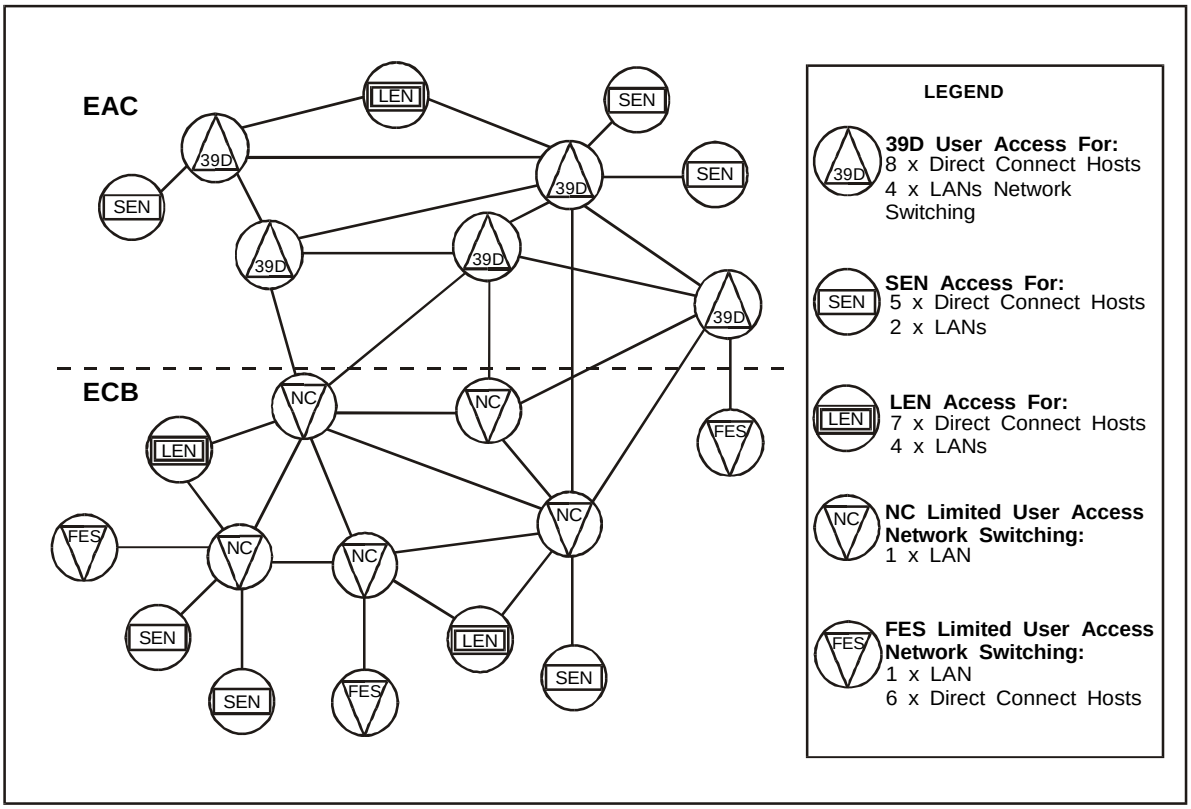

Figure 7-2. TPN WAN

AN/TYC-20 PACKET SWITCH

7-4. The AN/TYC-20 is a self-contained unit and is the packet switch used in the TPN. The switch provides user access and routes packets through the MSE network. To accomplish this, the switch contains two separate processors. One processor is the main processor which automatically switches and routes data as packets. The other processor is the integral gateway (IGW) (the IGW-side) which acts as a transparent gateway to all LAN hosts.

7-5. One packet switch locates in the NCS, SEN, NMT, and FES shelters. Two packet switches locate in the LEN shelter and the TTC-39D. In MSE and TRI-TAC networks, a small portion of the trunking is dedicated to support the packet overlay. The SEN to NCS/TTC-39D trunks are at 16 kbps, while backbone trunking (NCS/TTC-39D to NCS/TTC-39D, NCS/FES/TTC-39D) and LEN to NCS/TTC-39D trunking are at 64 kbps. This data overlay of packet switches is implemented with almost no impact on voice user grade-of-service. The SEN, LEN, TTC-39D, and FES packet switches are mainly used for host connections and host access into the TPN backbone. The NCS packet switch, however, acts primarily as the backbone trunking packet switch for the TPN.

7-6. The IGW in the AN/TYC-20 acts as a transparent gateway and reverse address resolution protocol (RARP) server for all LAN hosts. The IGW contains two ports for LAN connections: LAN 0 and LAN 1. Both ports pass through separate Institute of Electrical and Electronics Engineers (IEEE) 802.3 transceivers and the shelter's signal entry panel (SEP). The IGW allows all connected TPN LAN hosts to send off LAN IP datagrams without any knowledge of the present TPN topology.

7-7. The TPN packet switch can connect up to 64 hosts on each of its LAN ports. However, with the AN/TYC-20, the IGW is considered one host per LAN appearance. Therefore, only a maximum of 63 hosts can connect to each LAN of the TPN. The IEEE 802.3 standard is 30 LAN hosts per 185 meters of RG-58 Thinlan cable. If using the LAN to full capacity, a repeater should be placed after the first and second 185-meter segment containing 29 or 30 hosts. If using only one segment of 185-meter cable, the TPN can connect only 30 hosts minus the IGW.

7-8. In the NCS, TTC-39D, and FES, there is a further limitation on LAN 0. The switch workstation is connected to LAN 0 and is considered connected to host port 56 at all times. Therefore, LAN 0 at the NCS, TTC-39D, and FES is not used in either shelter. The switch workstation contains the TNS and the MTA. If a user improperly connects to LAN 0, the workstation may be disconnected causing the TNS and the MTA to function incorrectly. This is highly undesirable; therefore, the user community should not connect to this LAN.

7-9. The TPN has two general configurations of the packet switch: the six port and the twelve port. The different configurations allow the various MSE and EAC shelters to accommodate distinct arrays of hosts and trunks. The SEN, LEN, and NMT contain the six-port configuration. The six-port configuration has twelve physical ports on the packet switch back plane; however, only six of these ports are configured in the packet switch software

and are physically realized on the input/output (I/O) circuit card assembly (CCA). The NCS, FES, and TTC-39D contain the twelve-port configuration. There are twelve physical ports on the packet switch and all ports are configured for operational use.

AN/TYC-19 GATEWAY SWITCH

7-10. The AN/TYC-19 or the T-20 gateway IP router is a communications gateway processor. As a stand-alone device, it resides only in the NCS and TTC-39D as part of its packet switching equipment. The gateway interconnects three different IP networks. These different networks may be networks with different net identifications (IDs) or other types of LANs and WANs (Internet or DISN). The T-20 router provides up to three port interfaces, hence the interconnection of three different packet switch networks. The gateway also supports direct trunk lines to other T-20 gateways.

CV-4206/TTC SIGNAL DATA CONVERTER

7-11. The LEN, SEN, FES, and TTC-39D configurations can connect a wired subscriber to the packet switching network, but they require a signal conversion. The signal data converter (SDC) performs this function. It converts four-wire data into a conditioned diphase (CDP) stream in one direction, and converts the CDP stream into data in the opposite direction. The SDC enables hosts to operate at distances of up to 4 kilometers (2.4 miles).

HOSTS

7-12. Hosts can be any type of computer that meets the specifications of the TPN and can operate with the protocols prescribed by the network. These hosts can connect through an X.25 interface or as part of a LAN. Hosts classify as either standard hosts or high priority hosts. The high priority hosts are normally LAN hosts because the packet switch does not monitor LAN hosts and the IGW provides the interface, whereas the X.25 hosts connect directly to the packet switch.

TACTICAL NAME SERVER AND MESSAGE TRANSFER AGENT

7-13. The TNS and the MTA are combined on a single workstation in the NCS, FES, LEN, and TTC-39D. However, the TNS and MTA are running only in the NCS and the TTC-39D, and possibly the FES (if it is configured as an NCS). The TNS and MTA are not running in the LEN or the FES if the FES is configured as a LEN, unless the LEN is booted as an NCS.

7-14. The TNS is a dynamic database consisting of registered hosts and mailboxes whose main function is to answer queries from hosts and from the MTA. The database is dynamic due to the ability of a host or mailbox to relocate anywhere in the TNS network. Thus, when a host relocates, the local TNS receives the new registration information and transmits it to the other TNSs.

7-15. The TNS provides an automatic affiliation process similar to voice users. It performs host address resolution and user registration and provides a means for users to determine the current network location of other users on the network. The TNS network may consist of one or more IP networks. This is because occasionally one network cannot contain all the necessary packet switches.

7-16. The MTA is the e-mail component of the network. It performs e-mail store and forward, absent host coverage, and multiple addressing. The TNS and MTA combine to support mobile users in a tactical environment.

PHYSICAL INTERFACES

7-17. The two physical interfaces to the packet network are Thinlan (IEEE 802.3 or Ethernet) and four-wire CDP (for X.25 users). Access via IEEE 802.3/Ethernet is by a standard LAN card with the transmission control protocol (TCP)/IP. The length of the coaxial cable cannot exceed 185 meters without a repeater (not supplied with the system) at a maximum access rate of 9.6 kbps. The alternative to IEEE 802.3/Ethernet is X.25 access via a four-wire CDP connection (WF-16 field wire). The four-wire connection provides access at a range of up to 4 kilometers (2.4 miles) with an access data rate of 16 kbps. Figure 7-3 shows user connectivity to a SEN.

X.25 INTERFACES

7-18. Direct X.25 connection of the TCP/IP host computer to the TPN four-wire CDP X.25 port requires a special interface. Commercial X.25 cards do not support four-wire CDP output, but most cards support synchronous RS-232 signaling levels. Three interface solutions can convert the RS-232 output of a commercial X.25 card to four-wire CDP. These solutions are used to connect TCP/IP hosts to the TPN.

7-19. The first solution is the tactical packet adapter (TPA). It is a self-contained external device and a simple, low-cost synchronous RS-232 to four-wire CDP converter. The installation of the TPA requires only a cable connection to the computer network adapter to the TPA and the connection of the CDP lines to the binding post.

7-20. The second solution is the MSE data interface device (MDID) (all models). The MDID is a simple, low-cost synchronous RS-232 to four-wire CDP converter.

7-21. The third solution is the tactical terminal adapter (TTA). It is a simple, low-cost synchronous RS-232 to four-wire CDP converter.

7-22. Host computers still require X.25 and TCP/IP to use the TPN. Host registration software is also required to take full advantage of the TPN.

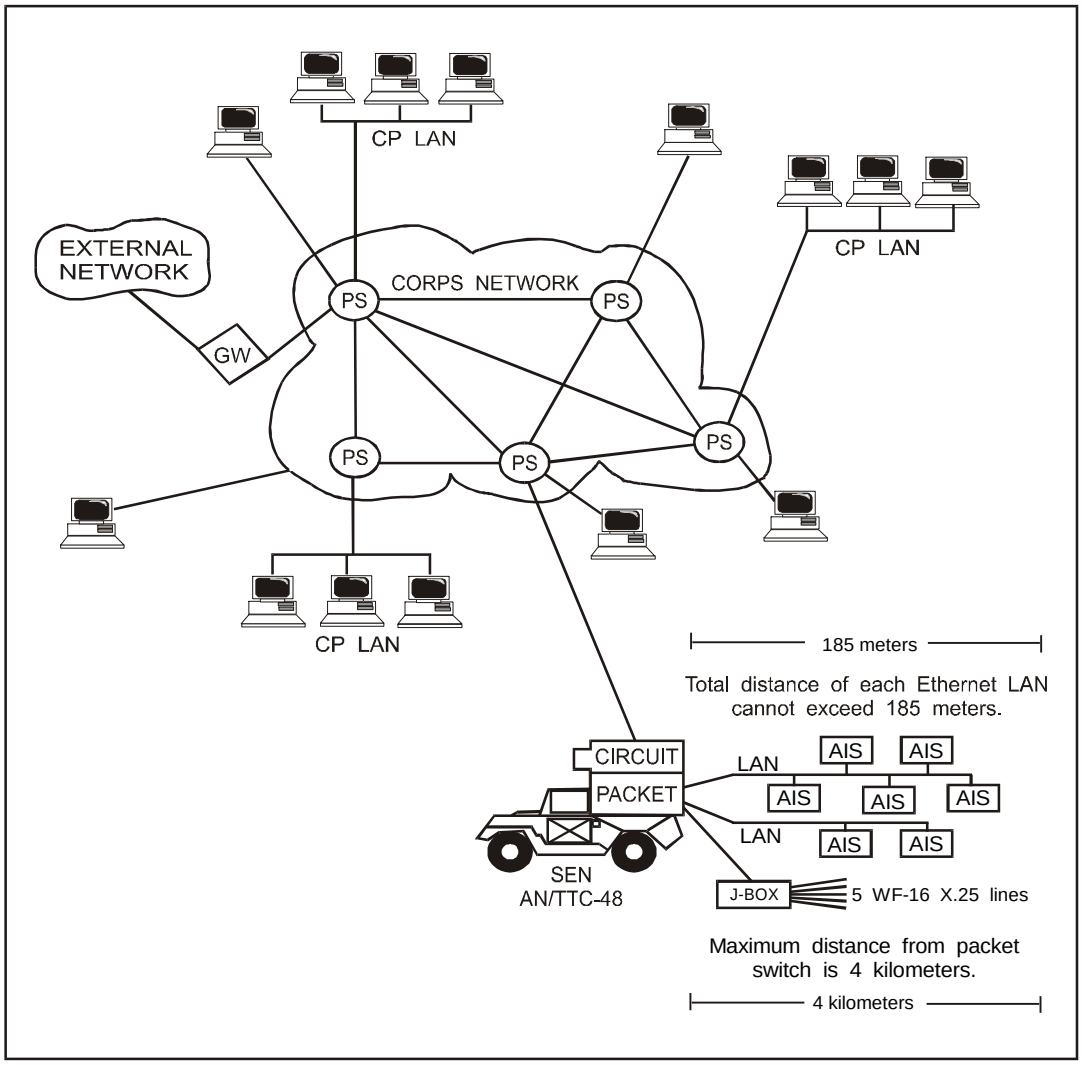

Figure 7-3. User Connectivity to a SEN

INTERNET PROTOCOL ADDRESS

7-23. IP is the protocol used in layer three (or four) of the International Standards Organization (ISO) seven layer stack model. This protocol builds a message into an IP datagram. The datagram contains a header, a source address, a destination address, the data, and an error-checking mechanism.

7-24. An IP address (source or destination) is composed of four bytes (or octets). It is constructed in the following format: Xl. X2. X3. X4, where "X" can take the values of 0-255. This address form is the decimal dot notation or simply the IP address. The TPN supports both Class A and Class B IP addresses. Networks that have more than 65,536 but less than 16,777,216 hosts use Class A addresses. Networks that have more than 256 hosts but less than 65,536 hosts use Class B addresses. The TPN is licensed legally to use only the Class B addresses.

7-25. The IP address in the TPN is similar to the telephone number of the circuit switch network. The switches have to know a user's IP address and/or number to route information from one user to another. In the TPN, the packet switch node can automatically assign the connecting host an IP address. Hosts connecting to a packet switch, however, must have the required software for the automatic assignment of an IP address. If the host does not have this software, the switch operator must manually assign an IP address. Whereas, if the required software is present, the IP address is obtained without any user knowledge of the TPN topology.

7-26. An X.25 host should have Auto X.25 functions, and a LAN host should have RARP functions for automatic assignment of IP addresses, respectively. TPN X.25 hosts obtain their IP address from their connecting packet switch by sending a CALL REQUEST packet. The packet switch responds to the CALL REQUEST packet with an INCOMING CALL packet.

7-27. Once the host obtains its address, it can begin talking with the rest of the network and can register itself with the TNS. This is a nonstandard implementation for TPN users. User communities must develop and implement the software to perform this automated method of attaining an IP number.

7-28. For LAN hosts, the TPN can connect up to 63 host port numbers per user LAN. Again, only 29 hosts may connect per 185-meter segment of Thinlan cable. TPN LAN hosts automatically obtain their IP address from the IGW by using the RARP. A low-level protocol binds addresses dynamically instead of using a static table that lists each host's physical address and corresponding IP address. The IGW is the RARP server for all TPN LAN hosts. No other RARP server may attach to the TPN LANs. There are multiple times at which the host may send a RARP request. One of the most common procedures is to send a RARP request to the IGW for an IP address as the host is booting up.

7-29. A new IP address is required each time a host obtains a new physical connection to the TPN, or if the host is reconnected to a LAN after having powered down, or if the host is otherwise disconnected from the LAN. The RARP request contains the requesting host's 48-bit hardware IP address. The IGW responds to the RARP request with a RARP response to the requesting host. The RARP response includes the IP address and hardware address for the originator and the IGW. The IGW RARP server assigns IP addresses from highest port to lowest port; therefore, if hosts do not have RARP or the requirement is to assign IP addresses manually, the assignment is from lowest to highest. (See Figure 7-4.)

HOST REGISTRATION

7-30. Registration allows a host and associated mailboxes to register with the TNS allowing the host to communicate with all hosts in the network. After the host receives its name, registration involves two separate processes. The first is to obtain the host's IP address from the packet switch network. The second is to register the host and associated mailboxes with the TNS as described in SR-43A and SR-45. (See Figure 7-4.)

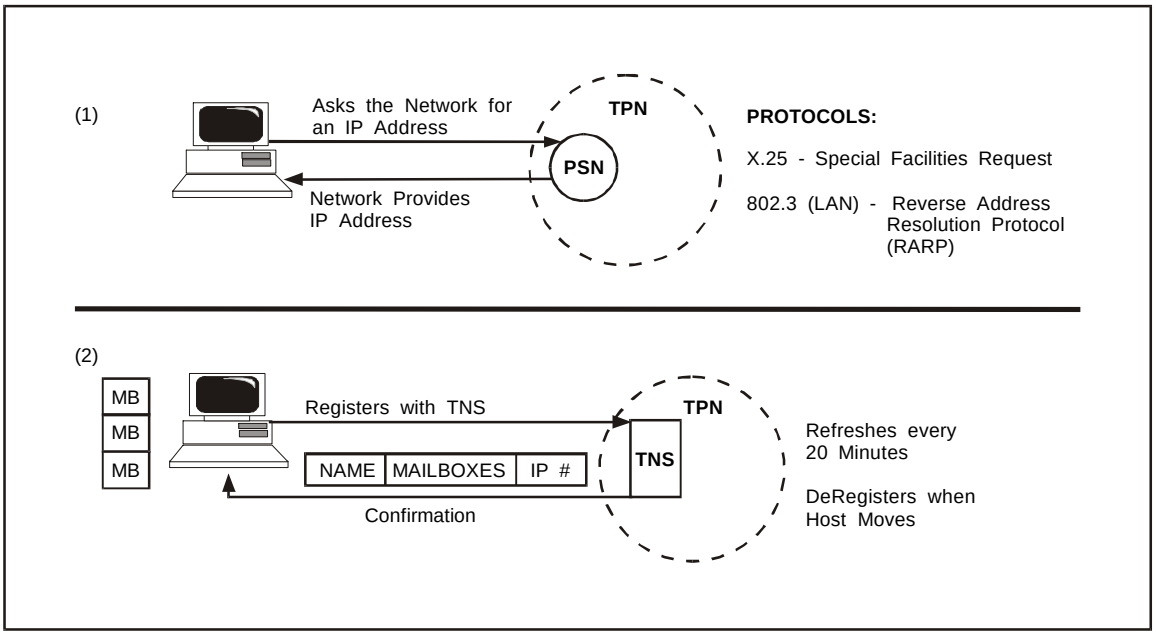

Figure 7-4. Host Address Assignment and Registration with the TNS

NETWORK MANAGEMENT

7-31. The NMC (AN/TYQ-54) manages the network, and it is a comprehensive real-time network monitoring and control system for the TPN. It is a computer workstation that monitors and controls the packet switching equipment. The NMC's hardware components include a central processing unit (CPU), a color monitor, a keyboard, and a trackball. Its software, known as the Integrated Management System (IMS), enables the NMC operator to observe activity in a tactical network and to diagnose any problems that may arise. (See Figure 7-5 and Figure 7-6.)

MONITORING:
- Constant watch on network components.
- Recording and displaying device status changes and network events.
- Operator querying of specific network components real-time status.

CONTROL:
- Network operators can remotely issue commands to control network components (for example, diagnostics, throughput, and software downloads).

STATISTICS COLLECTION:
- Gathers statistical data for further processing.

REPORTING:
- Processes statistics and monitors information to produce management reports.

Figure 7-5. Packet NMC Functions

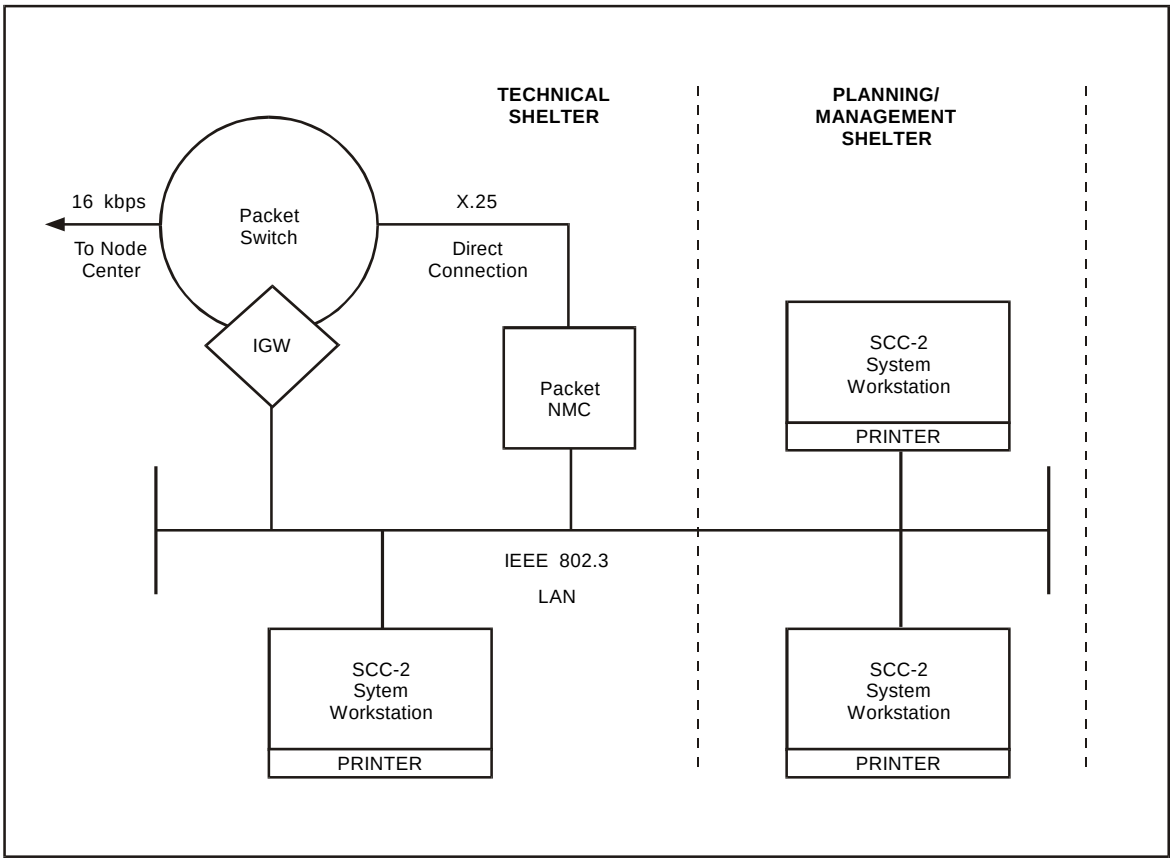

Figure 7-6. Packet NMC in the NMT

Chapter 8

Asynchronous Transfer Mode Switch

This chapter gives an overview of the asynchronous transfer mode (ATM) switch for high-speed data switching.

BASIC ASYNCHRONOUS TRANSFER MODE TECHNOLOGY

8-1. ATM technology provides a highly efficient communication system for high-speed data switching. This capability transmits voice, video, and data in a single communication link. Figure 8-1 shows the basic ATM switch technology. The system can also transmit still photography, images, and graphics.

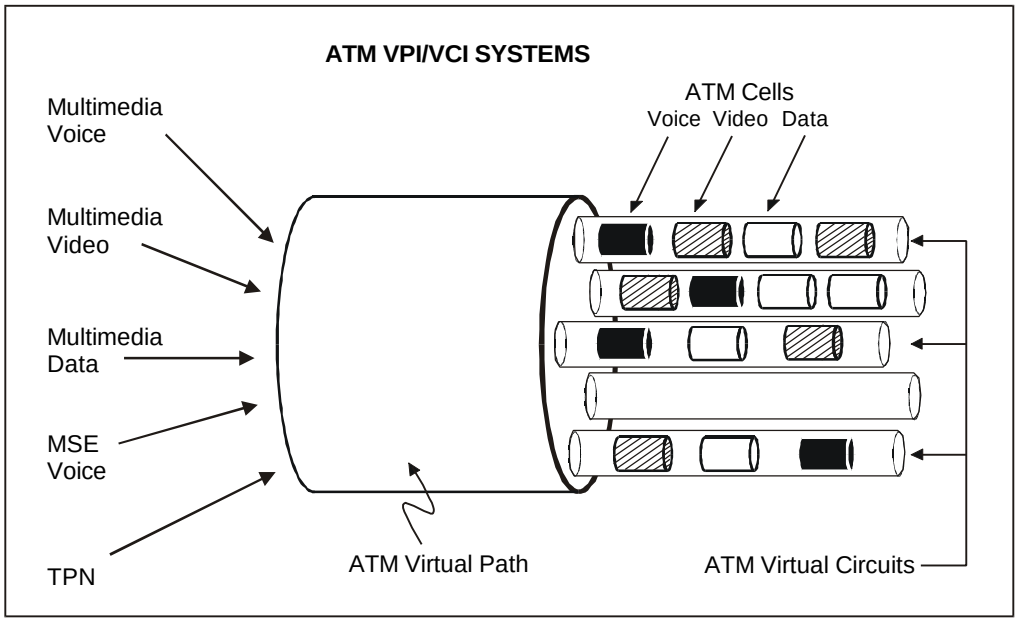

Figure 8-1. ATM Switch Technology

8-2. The ATM basic technology concept involves using a virtual path identifier (VPI) and a virtual circuit identifier (VCI). The VPI and VCI are used for ATM address assignment. The VPI directs the data to the correct receiver, and the VCI identifies the different cell streams within a transmission. Virtual circuits are one-way ATM connections from source to destination, which means that two connections are required for full-duplex (two-way) communications.

8-3. ATM technology offers additional advantages that include–

- More efficient use of radio bandwidth because it dynamically assigns bandwidth as needed.
- Ability to assign priority and precedence for designated users, allowing data from high priority users to be sent out first.

8-4. ATM switching shows significant potential, especially for large throughput and fast speed of service. The ATM hub switch provides the tactical ATM backbone switching support for all tactical users. The switch terminates wideband fiber optics, synchronous optic network (SONET) radios, and currently employed tactical digital radios and DTG network interfaces. It has an adaptive forward error correction (FEC) capability that improves the quality and reliability of the DTGs.

FUNCTIONS

8-5. The ATM switch package provides a multimedia and a video teleconference (VTC) capability for commanders in the field. ATM technology applies to selected switches in the MSE ACUS. ATM switches support workstations where key commanders participate in VTCs using the MSE network as a transmission medium. ATM cells created at the workstation and those created in the ATM switch are transmitted across MSE links according to designated addresses.

8-6. The ATM switch package is the Integrated Systems Technology (IST) Model LDR-100 ATM switch card, which has two versions. The first is the LDR-100C compact version installed in the SENs. The other is the LDR-100S standard version installed in the AN/TTC-47 NCS. The LDR-100–

- Uses the Lucent Limitless ATM Network (LANET) ATM protocol that puts ATM cells into frame for synchronization and ease of identification.
- Provides cell leader error correction that allows address mapping according to possible errors if a header or address contains error data (bits).
- Supports ATM and non-ATM links that supports VTC, multimedia, MSE voice, and TPN traffic.
- Contains special buffers to minimize the delay of constant-bit-rate (CBR) traffic and to allow peak data rates for variable-bit-rate traffic.
- Supports up to 4,095 independent ATM addressees for each port.
- Uses four serial ports using the Communications-Electronics Command (CECOM) Quad-Serial Card. This card supports programmable data rates of 300 bytes per second (bps) to 1.544 megabytes per second (mbps) using serial protocols (RS-232 or RS-422) and the transmission of cell-bearing and non-cell bearing data. The Quad-Serial Card interfaces the ATM switch with the MSE system.

- Uses one transparent asynchronous transceiver interface (TAXI) card to support connections for one serial system and one parallel port. It allows programmable data rates for each port and supports the transmission of cell-bearing and non-cell bearing data.
- Uses a TAXI card to connect the user's VTC workstation to the ATM switch.
- Uses an interface card that has its own CPU. The CPU stores the configuration and settings for that interface card, and it allows preconfiguration of ATM switches during the predeployment phase.

DEPLOYMENT

8-7. The ATM switch package is embedded in selected NCs, LENs, and SENs of the MSE network. Figure 8-2 shows the NC and LEN switch configuration. Figure 8-3 shows the SEN switch configuration.

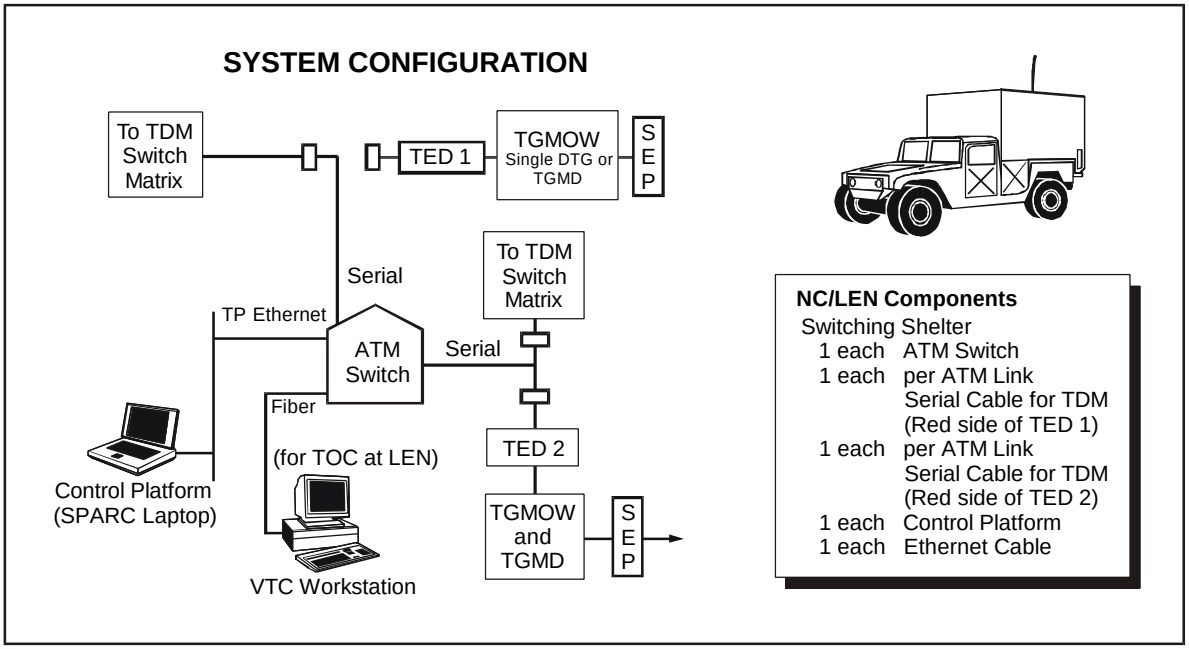

Figure 8-2. ATM Switch Configuration for NC/LEN

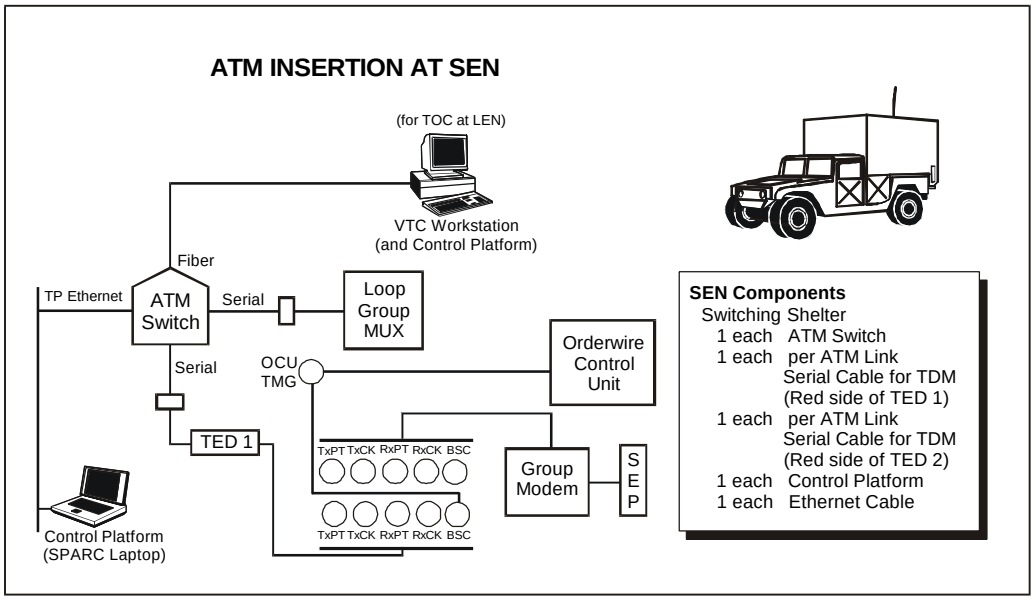

Figure 8-3. ATM Switch Configuration for SEN

8-8. ATM-enabled MSE switches are positioned according to the factors of METT-T to best support the commander's concept of the operation. ATM switches usually locate with the DTAC, the brigade TOC, the aviation TOC (AVTOC), and the brigade rear TOC. ATM-enabled MSE switches also locate as needed with the Army Air Missile Defense Command (AAMDC), Air and Missile Defense Planning and Control System (AMDPCS), and Air and Missile Defense Task Force. Figure 8-4 shows an example of a typical deployment of the MSE network with ATM-enabled NCSs and SENSs.

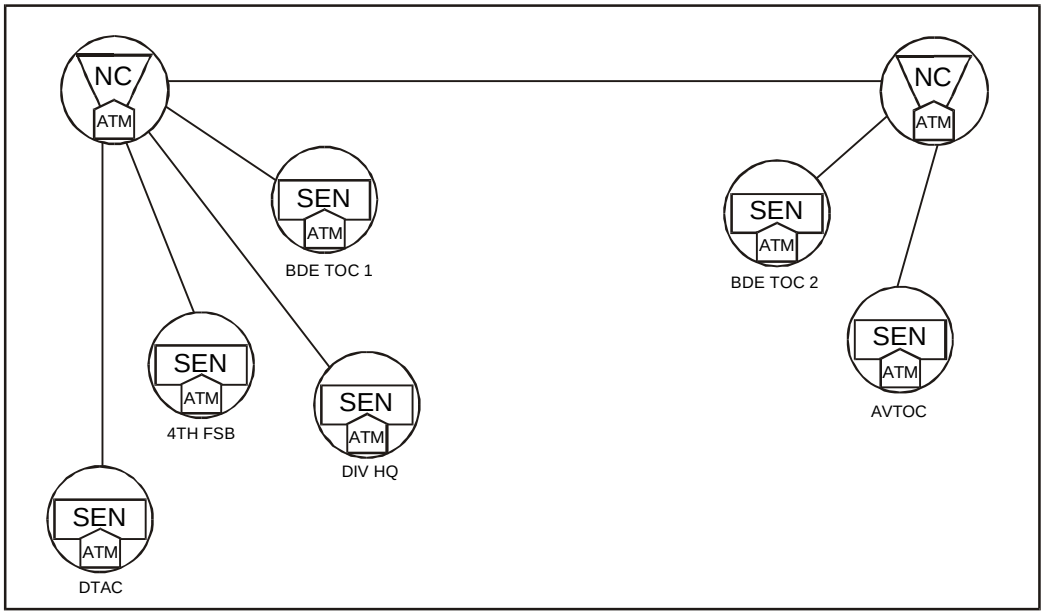

Figure 8-4. Deployment of the MSE Network with ATM-Enabled NCSs and SENSs

OPERATIONAL SOFTWARE

8-9. Sun Net Manager is the operational software used and is contained in a laptop computer. To support the operational requirements for efficient high-speed data switching, the ATM switch applies the advanced ATM technology in its operational software design. Figure 8-5 shows that the data being transferred is broken down into very small pockets (53 bytes) called cells and given specific addresses for their destination. Each cell contains a 5-byte leader for control purposes and 48 bytes for the data payload. The software design supports the transmission of video, audio, and data from their sources to their destinations within the MSE architecture.

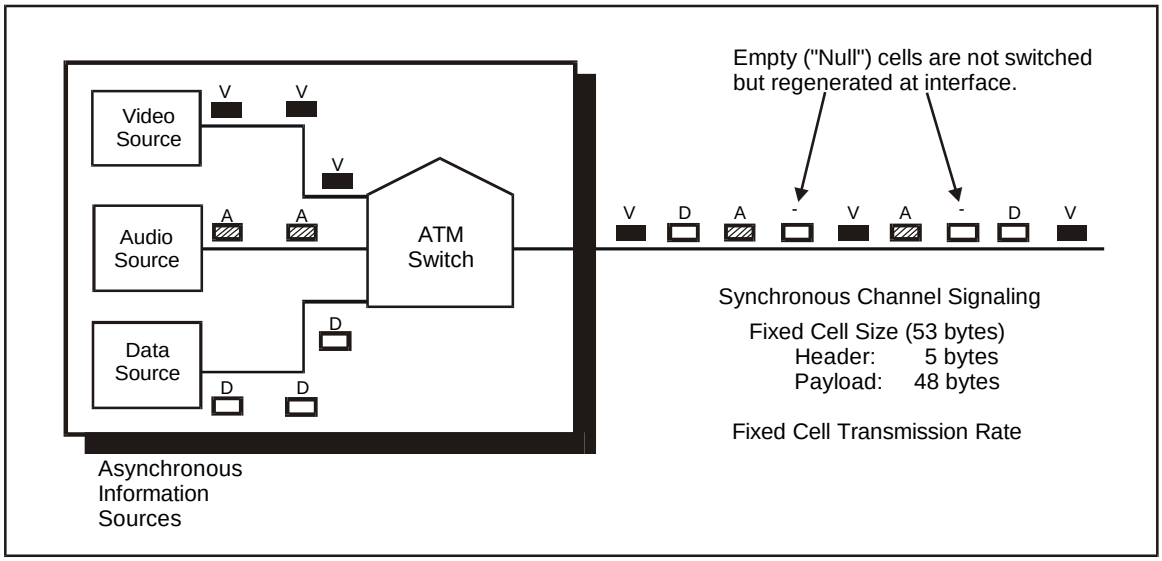

Figure 8-5. ATM Source Multiplexing Function

OPERATIONAL PROCEDURES

8-10. Operational planning for the ATM network focuses on ensuring the required communication capabilities are available and tailored to the commander's requirements. ATM facilities and capabilities are tuned to support the operational requirements of the mission. ATM connections and naming requirements are determined well before deployment. Figure 8-6 shows a typical DTG path for ATM-enabled telephone circuits.

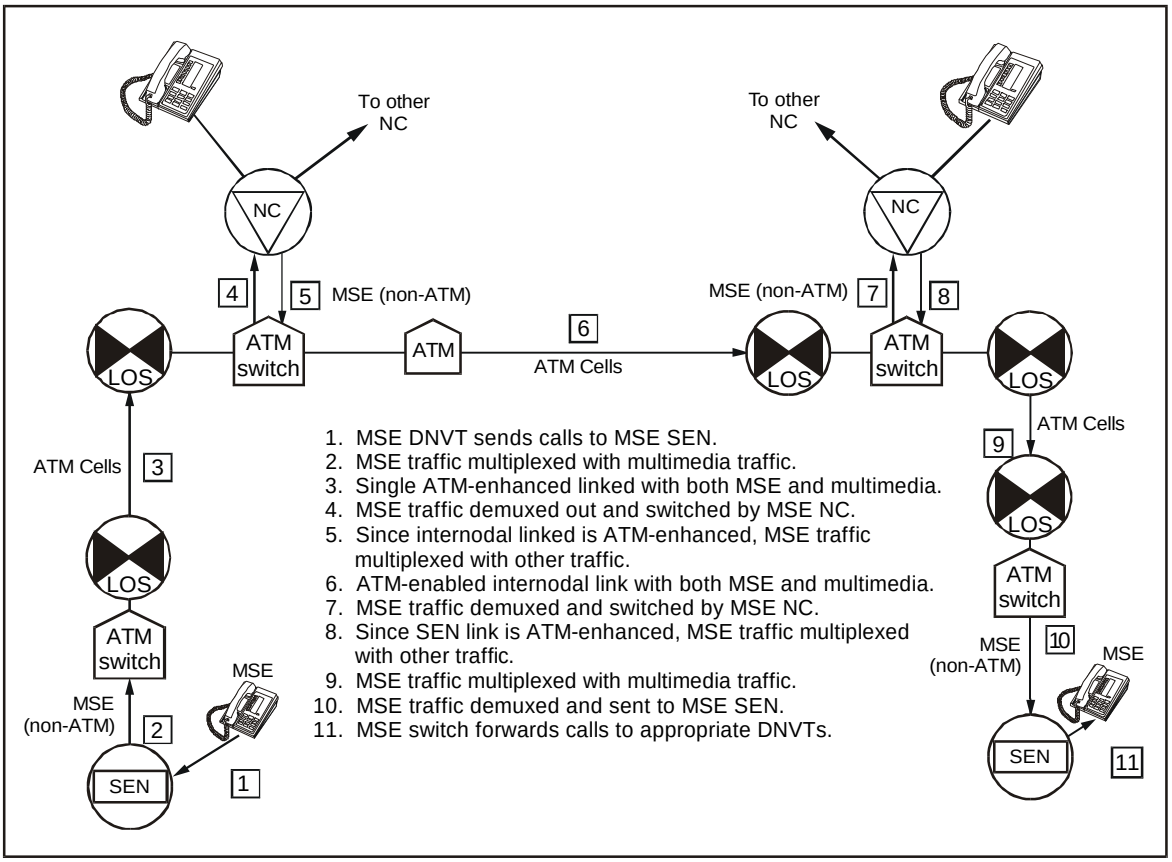

Figure 8-6. DTG Path for MSE Telephone Circuits

8-11. Data rates between an NC and a SEN are increased from 256 kbps to 1024 kbps. This allows 256 kbps for MSE switching and the TPN; and 786 kbps to support user VTC, whiteboarding, and high-data requirements through the ATM switch. Links between two NCs (internodal links) will operate at 1024 kbps. The NCS will configure their databases to operate at 512 kbps. This allows 512 kbps for VTC/whiteboarding workstation connections and MSE switching and TPN data. Figure 8-7 shows the use of two DTGs for the ATM. Network planning factors include workstation needs to operate within hardware and software parameters. For example, ATM network interface cards (NICs) in the workstations listen only for ATM connections addressed with O as the VPI.

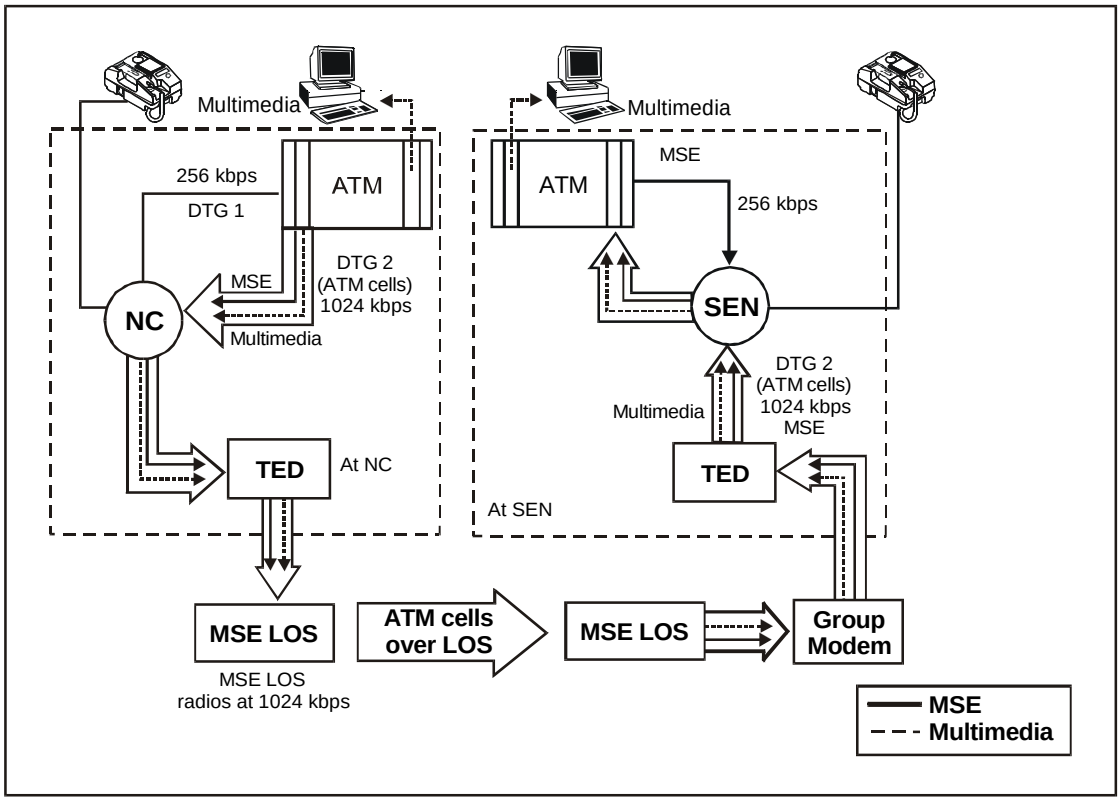

Figure 8-7. Using Two DTGs for an ATM Solution

TACTICS AND TECHNIQUES

8-12. The current ATM-enabled MSE switch contains limitations that affect employment techniques in the field. ATM technology relies on LOS radios operating at 1024 kbps. Potential frequency allocation problems are due to the number of frequencies available within the battlespace. Current MSE systems were designed for 1024 kbps for internodal links between NCs and 512 kbps for links for LENs and SENs (256 kbps was typically used for links leading from SENs). The requirement for increasing the bandwidth for all links to support ATM switching can lead to frequency allocation problems. Careful planning is required to allow adequate bandwidth and frequency allocation.

8-13. Within the NCs, it is impossible to use the same DTG for interface in and out of the ATM switch. This is because the transmission group modem and orderwire (TGMOW) card in the NCs cannot support multiple data rates. The TGMOW card provides the interface to both the plain text and cipher test sides of the TED. On the plain text side of the TGMOW, the card creates and manages the framing channel to the DTG. On the cipher text side, the TGMOW provides a reclocking buffer to adjust for differences between network and switch timing. Although both sides are running synchronous interfaces (clock and data), the two sides are not independent of each other. The TGMOW card requires a common clock for both sides and must operate at different data rates.

8-14. The necessity to run the TGMOW at two different rates is due to inherent properties of CBR cell encapsulation. The CECOM Quad card provides two modes: a non-cell bearing CBR RS-442 access and cell bearing DTG trunk. The access modes on the CECOM Quad card encapsulate incoming data into ATM cells. This process takes the CBR data, regardless of content, and places it within the payload of an ATM cell.

8-15. The resulting output has an additional 10 percent in ATM header information in addition to the data. This results in a higher data rate on the cell-bearing side of the CECOM Quad card. To resolve the multiple data rate problem, a second DTG is set up to interface to the output of the CECOM Quad card at the cell-bearing rate while the DTG connected to the switch matrix will run at the access data rate. This keeps the TGMOWs in agreement with the input and output rates at the ATM switch. NCs must also modify the database so that the TED corresponding to the actual DTG used is consistent with the setup. This way, the COMSEC controller card knows which TED to control if an AUTO-RESYNC COMMAND occurs.

8-16. An ATM-enabled SEN does not have the same problem as the NCs with the TGMOW card. The ATM-enabled SEN can only connect to an ATM-enabled NC. This reduces the flexibility of reconfiguring the MSE network during movement across the battlefield. The ATM-enabled NCs must have a CECOM Quad card and two DTGs available before it can connect the SEN into the MSE system. Network planners must know the contents and configuration information of the NCs database and the ATM switch configuration to reconfigure the network.

HIGH-SPEED MULTIPLEXER

8-17. A high-speed multiplexer (HSMUX) circuit card that replaces the multiplexer-demultiplexer (MXDMX) card in MSE switch modems provides video and high-speed data access through the MSE network at ECB and the TRI-TAC network at EAC. The HSMUX expands the group rate from 256 to 512 kbps and provides a port for local connections and four high-speed ports that support data rates of 64, 128, and 256 kbps. The HSMUX enables high-speed data access over the existing backbone network. Circuit configuration is via the channel reassignment function (CRF) that allows the switch operator to configure automatic connection for VTC service. An enhancement option will allow automatic circuit configuration through programming software. Appendix D provides a more detailed description of the HSMUX.

ENHANCED TRANSMISSION GROUP MODEM AND ORDERWIRE

8-18. The enhanced transmission group modem and orderwire (ETGMOW) cards will be an interim solution to increased data capabilities prior to the Warfighter Information Network (WIN). The ETGMOW and HSMUX II cards alleviate customizing the standard database (channel reassignment) at the NC and assigning multiplexers that reduce extension capabilities.

Appendix A

MSE Symbology and Equipment Nomenclature

This appendix gives the current symbology and equipment nomenclature for MSE including the ISYSCON symbols.

MSE SYMBOLOGY

Table A-1 contains symbols that represent joint symbology for tactical communications. They are derived from the Global Team Labeling (GTEAM) data file of the GDB. The left-hand column of the table shows the symbol and the right-hand column lists the equipment nomenclature associated with the symbol. The standard team name is identified above the symbol. The team label is identified below the symbol and is either a four or a five character field. The symbol is associated with the team type in the GTEAM data file.

Table A-1. Joint Symbology for Tactical Communication Systems

Symbol	Nomenclature
NC 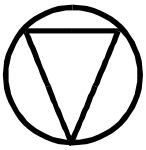 XXXX	NC TTC-47
FES 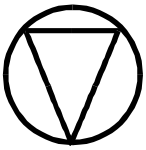 XXXX	FES Airborne (ABN) (CCES) TTC-50
FES 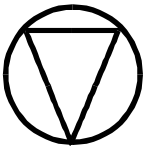 XXXX	FES CCPS TTC-50
LEN 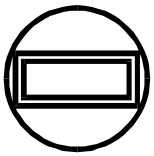 XXXX	LEN TTC-46 ECB

Table A-1. Joint Symbology for Tactical Communication Systems (Continued)

Symbol	Nomenclature
LEN 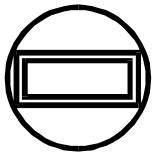 XXXX	Medium Extension Node (TTC-46 and GSQ-80) EAC
SENX 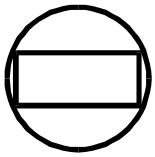 XXXXX	SEN TTC-48(V1) (SEN1) TTC-48(V2) (SEN2)
DES 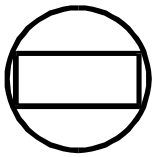 XXXXX	DES TTC-51
3865 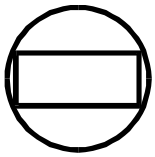 XXQXX	SB-3865 Air Force (AF)/ United States Marine Corps (USMC)
RAU 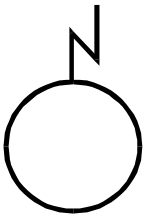 XXRXX	RAU
39D 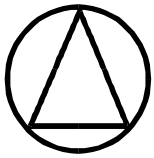 XXXX	Area Node TTC-39D

Table A-1. Joint Symbology for Tactical Communication Systems (Continued)

Symbol	Nomenclature
39A4 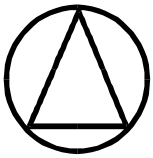 XXXX	Area Node TTC-39A(V4)
39A3 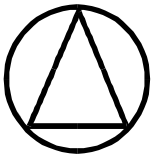 XXXX	Area Node TTC-39A(V3)
39A1 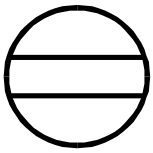 XXVXX	Area Node TTC-39A(V1)
CDS 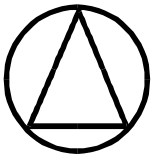 XXXX	Area Node Compact Digital Switch (CDS)
39E 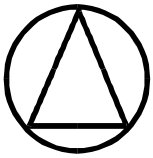 XXXX	Area Node TTC-39E
39E1 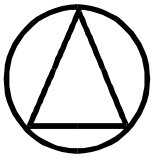 XXXX	Area Node TTC-39E(V1) SOF Shelter Node
42 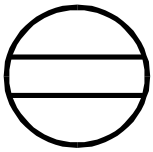 XXMXX	TTC-42 (AF/USMC)

Table A-1. Joint Symbology for Tactical Communication Systems (Continued)

Symbol	Nomenclature
DS 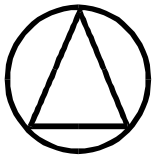 XXXX	DS AF Digital Switch
SMU 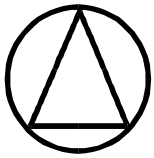 XXXX	Switch Multiplex Unit (SMU) is planned to be used in Standard Tactical Entry Point (STEP), Super High Frequency Tri-Band Advanced Range Extension Terminal (STAR-T), and aboard ships.
ALOG 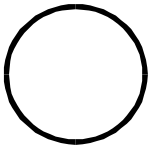 Label	Analog Switch (ALOG)
41x or 3614 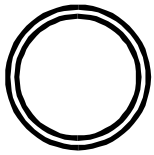 XXPXX	ALOG Switch (Tandem) TTC-41(V1) (411 through 414) SB-3614 (3614)
CDIG 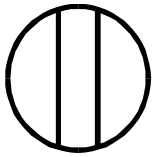 Label	Commercial Digital (CDIG)
LOSx XXZXX	Radio Relay (RR) LOS(V1-V4) (LOS1-LOS4)
RLOS XXLXX	Remote LOS (RLOS)

Table A-1. Joint Symbology for Tactical Communication Systems (Continued)

Symbol	Nomenclature
TYC 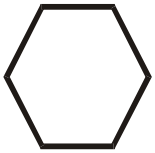 Label	Message Center TYC-39 TYC-39A
TYC 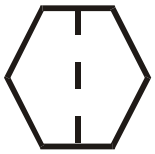 Label	Message Center TYC-17
MSC 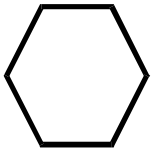 Label	Message Center MSC-63 R or Y in center of symbol
ISYS XXWXX	Network Manager System (SCC-2, ISYSCON, CSCE and CSS)
TECHCON Label	Technical Control (TECHCON) TSQ-188 TSQ-111 TSQ-84
ATM 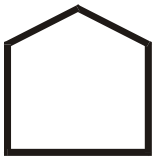 Label	ATM Switch
SMUX 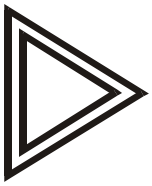 Label	SMART MUX (SMUX) Integrated Digital Network Exchange (IDNX) TIMEPLEX

Table A-1. Joint Symbology for Tactical Communication Systems (Continued)

Symbol	Nomenclature
LTU 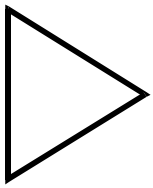 Label	LTU
RMC 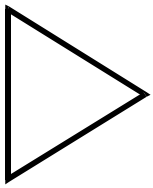 Label	RMC
RGLM 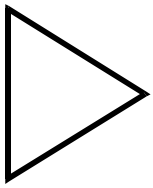 Label	Remote Loop Group Multiplexer (RLGM)
TGM 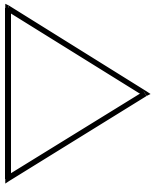 Label	Tactical Group Multiplexer (TGM)
NAI XXNXX	NAI
TMIF Label	Tactical MSE Interface Family Digital Modem (TMIF)

Table A-1. Joint Symbology for Tactical Communication Systems (Continued)

Symbol	Nomenclature
ADI 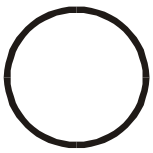 XXTXX	Air Defense Interface (ADI)
TPS 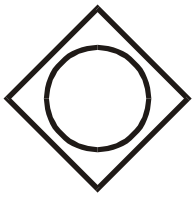 Label	Tactical Packet Switch (TPS)
IPR or GW 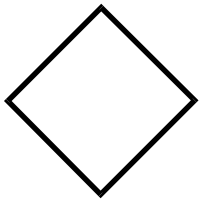 Label	Internet Protocol Router (IPR)/Gateways (GW) also Tactical Multinet Gateway (TMG) and Internet Controller (INC)
D 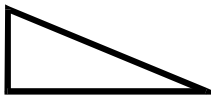 Label	Data Terminal or Computer Terminal
DNS or TNS 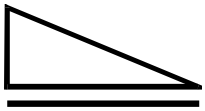 Label	Domain Name System (DNS) or TNS
MLS 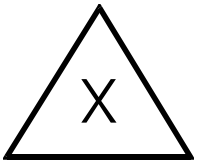 Label	Multilevel Security (MLS) Device I INE G Guard F Firewall X Other

Table A-1. Joint Symbology for Tactical Communication Systems (Continued)

Symbol	Nomenclature
KG 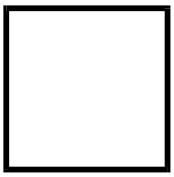 Label	Encryption Device (KG-194, KG-84)
EGRU 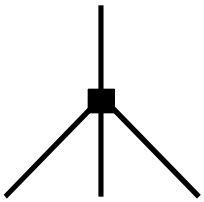 Label	EPLRS Relay Enhanced Grid Reference Unit (EGRU)
EPLRS 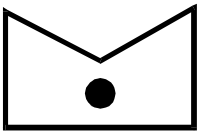 Label	EPLRS NCS
TST 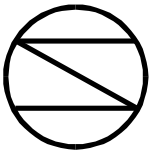 Label	TST
TRT 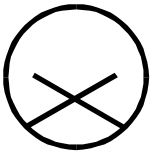 Label	TRT
JAM 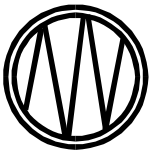 Label	Jammer

Table A-1. Joint Symbology for Tactical Communication Systems (Continued)

Symbol	Nomenclature
HFR Label	HF Radio (HFR) Primary/Alternate
	LOS Link (LOSL)
—Z—Z—Z—	TACSAT Link (TSL)
—X—X—X—	Tropo Link (TRL)
	Cable Link

Appendix B

MSE Interoperability

This appendix focuses on the three methods used to interface the ACUS and the Army Tactical Communications System (ATACS) equipped units, and it also covers data communications. Interoperability and connectivity between an MSE equipped corps/division and one unequipped corps/division are accomplished in several ways. The three methods covered show how an MSE SENS (AN/TTC-48) interfaces with an IATACS switch (AN/TTC-41). Interfacing requires slight modifications to the AN/TTC-41 and AN/TTC-48. The three methods of making this ACUS interconnection are–

- Method 1: Type V circuit card to Type I circuit card.
- Method 2: Type V circuit card to Type II circuit card.
- Method 3: Type VI circuit card to Type VI circuit card (the preferred method).

INTERFACE METHOD 1 - TYPE V TO TYPE I

B-1. Method 1 interfaces the IATACS switch card to the SENS. (See Figure B-1.) The database entries for method 1 are very minor, but require extensive operator intervention.

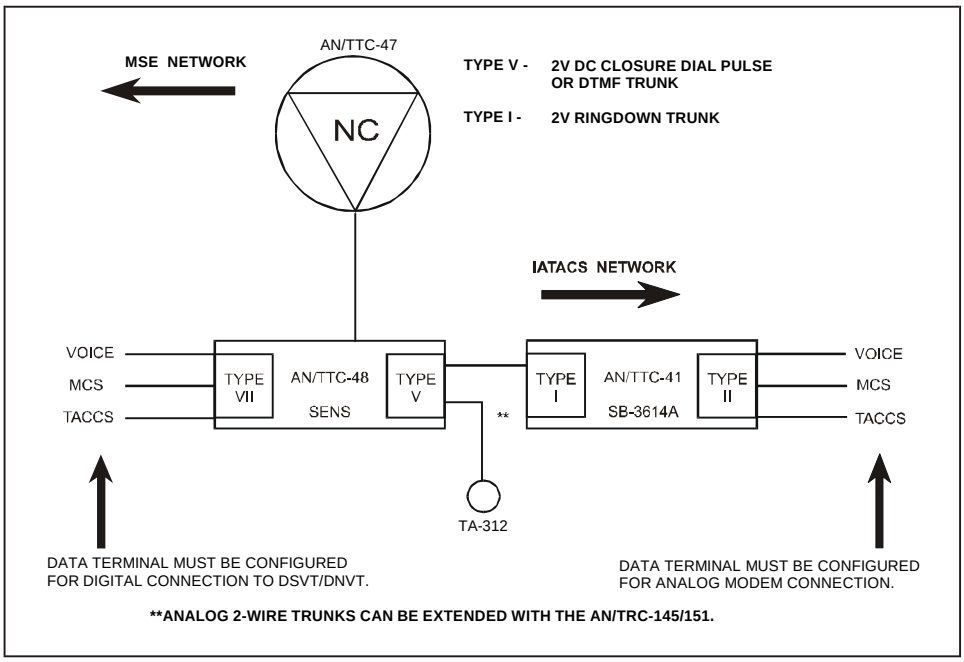

Figure B-1. MSE-IATACS Interface Method 1 - Type V to Type I

B-2. Method 1 achieves reliable voice communications across the MSE/IATACS boundary. The MSE operator must use a TA-312 telephone that is wired in parallel with the SENS dial central office (DCO) terminal. This sends a ringdown signal to the IATACS operator. Telephone calls cannot be automatically routed across the networks, and both operators must intercept and extend calls. Method 1 has the disadvantage that the SENS loses its ability to interface with a public switch.

B-3. Method 1 does not achieve data communications across the MSE/IATACS boundary. Data communications are from computer-to-computer. With MSE, the computers are configured for digital connection to the DSVT or DNVT. With IATACS, the computers are configured for analog modem connection. These configurations are not compatible with each other.

B-4. The following procedures network IATACS with MSE using interface method 1:

- The two switchboards are connected with field wire. A TA-312 is attached to the same terminals that send a ringdown signal to the SB-3614A. The signal alerts the IATACS operator that a call is coming in from the MSE operator.
- This interface does not allow automatic routing between the two networks. MSE network subscribers are given the SENS CSP number (LNXXXXX) and must place calls to the IATACS network through the SENS operator. IATACS network subscribers are given the MSE network area code (November Yankee X-ray [NYX]) and the designated MSE interface number assigned to the DCO line. They must place calls to the MSE network through the IATACS operator. The MSE operator intercepts all calls from the IATACS network on the DCO lines. The SENS operator extends calls into the MSE network in the normal manner.
- This method does not require any additional circuit cards, but does require a TA-312 (from the IATACS network) and some database changes.

NOTE: See TM 11-5800-216-10-1.

B-5. MSE system planning required for operation is as follows:

- Publish the SENS CSP DNVT phone number as the operator accesses the AN/TTC-41 network.
- Provide the SENS operator with phone directories for the AN/TTC-41 network and the MSE network, since calls from both networks are intercepted at the SENS.
- Determine if the adjacent network meets security requirements. Instruct gateway SENS to clear NSW tone when appropriate.

B-6. IATACS system planning required for operation is as follows:

- Publish the area code of the MSE network.
- Publish the directory number of the Type I terminals as another access to the MSE SENS operator. A fixed directory number could be assigned to simplify the dialing instructions for the network.

- The AN/TTC-41 operator should provide the SENS operator with directory assistance in the AN/TTC-41 network.

INTERFACE METHOD 2 - TYPE V TO TYPE II

B-7. Method 2 is similar to method 1. (See Figure B-2.) Method 2 interfaces the SB-3614A (AN/TTC-41) with the SENS (AN/TTC-48). The database entries for method 2 are minor, but they require significant SENS operator intervention.

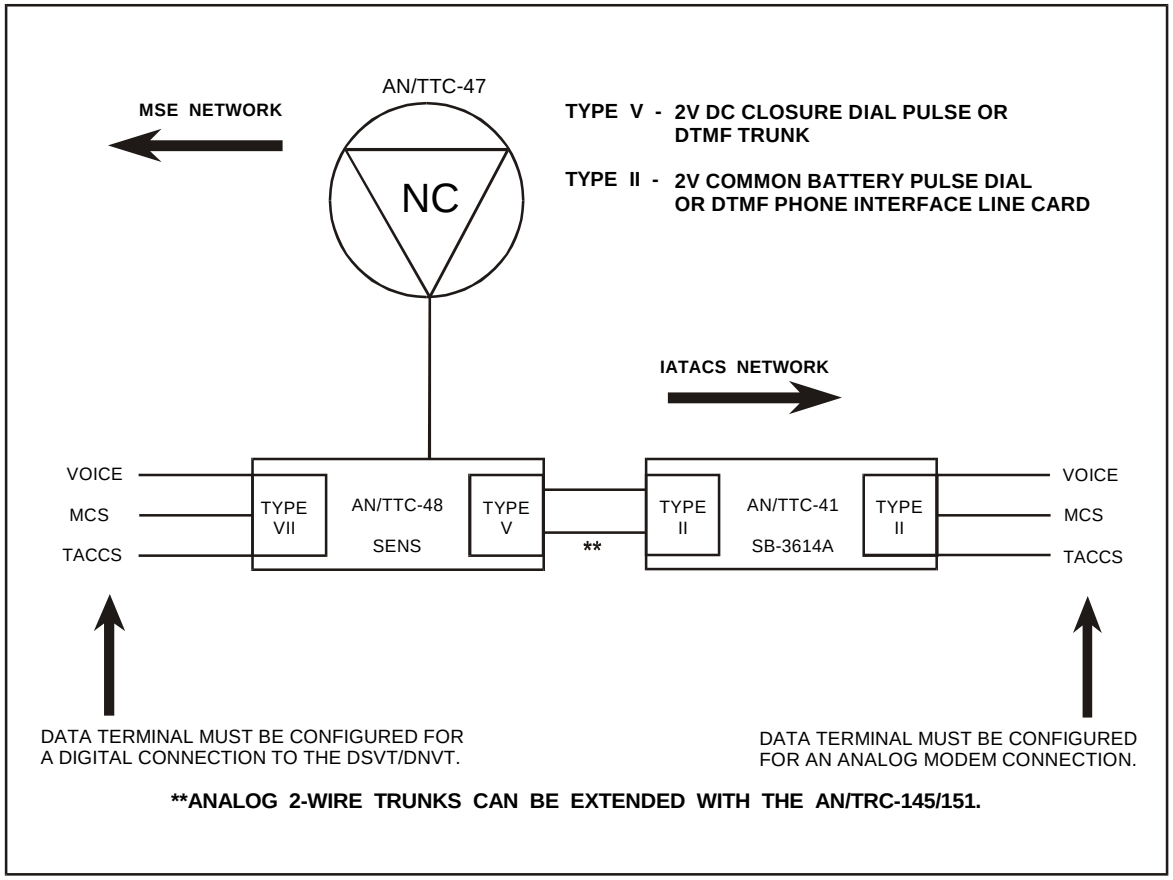

Figure B-2. MSE-IATACS Interface Method 2 - Type V to Type II

B-8. Method 2 also achieves reliable voice communications across the MSE/IATACS boundary. The telephone calls cannot be automatically routed across the networks. The SENS operator must extend all calls from or into the IATACS network. Method 2, like method 1, has the disadvantage that the SENS loses its ability to connect to a DCO.

B-9. Method 2 does not achieve data communications across the MSE/IATACS boundary for the same reasons described for method 1.

B-10. MSE system planning required for operation is as follows:

- Publish the SENS CSP DNVT phone number as the operator accesses the IATACS network.
- Provide the SENS operator with phone directories for the IATACS network and the MSE network since the SENS intercepts all calls from both networks.
- Determine if the adjacent network meets security requirements. Instruct gateway SENS to clear NSW tone when appropriate.

B-11. IATACS system planning required for operation is as follows:

- Publish the NYX area code of the MSE network. Assign digits that are easy to remember.
- Publish the directory number of the Type II terminals as another access to the MSE SENS operator. A fixed directory number could be assigned to simplify the dialing instructions for the network.
- The AN/TTC-41 operator should provide the SENS operator with directory assistance in the IATACS network.

INTERFACE METHOD 3 -TYPE VI TO TYPE VI

B-12. Method 3 interfaces the MSE SENS to an IATACS network using Type VI tone burst confirmation trunking cards in both systems (NCS MSE version or lower software). (See Figure B-3.) The database entries for method 3 are significant.

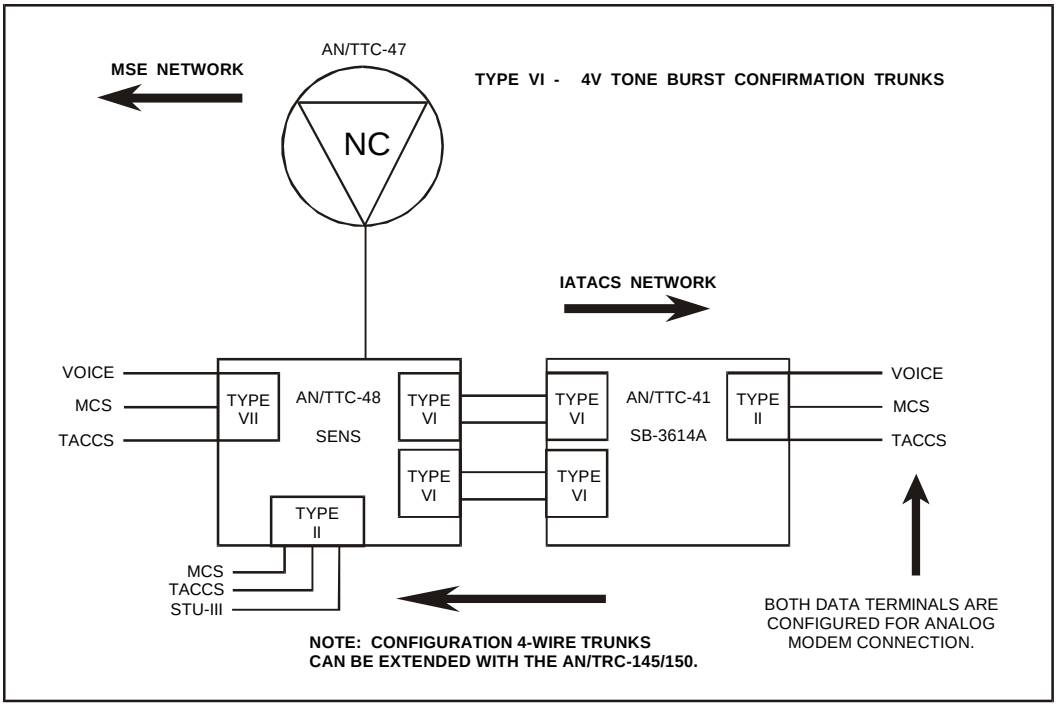

Figure B-3. MSE-IATACS Interface Method 3 - Type II to Type VI

B-13. Method 3 achieves reliable voice communications across the MSE/IATACS boundary. It allows calls to route automatically between the networks without operator intervention. Implementing this method requires installing additional circuit cards into the SENS. The IATACS network furnishes these cards. This method has the advantage of automatically routing calls across the networks and retaining the SENS ability to interface with a public switch. It also extends the distance between the SENS and IATACS switches.

B-14. Method 3 provides the SENS with analog subscriber loop ability. This allows computers in both networks to be configured for analog modem connection; therefore, protocols would be compatible. Using this method, the Tactical Army Combat Service Support (CSS) Computer System (TACCS) data communications across the MSE/IATACS boundary are successful, but MCS data communications are not. The MCS software aborts the data transmission before the communication systems achieve terminal connection. When the MSE system is expanded, TACCS data communications across the MSE/IATACS boundary become marginal. (See Figure B-4.)

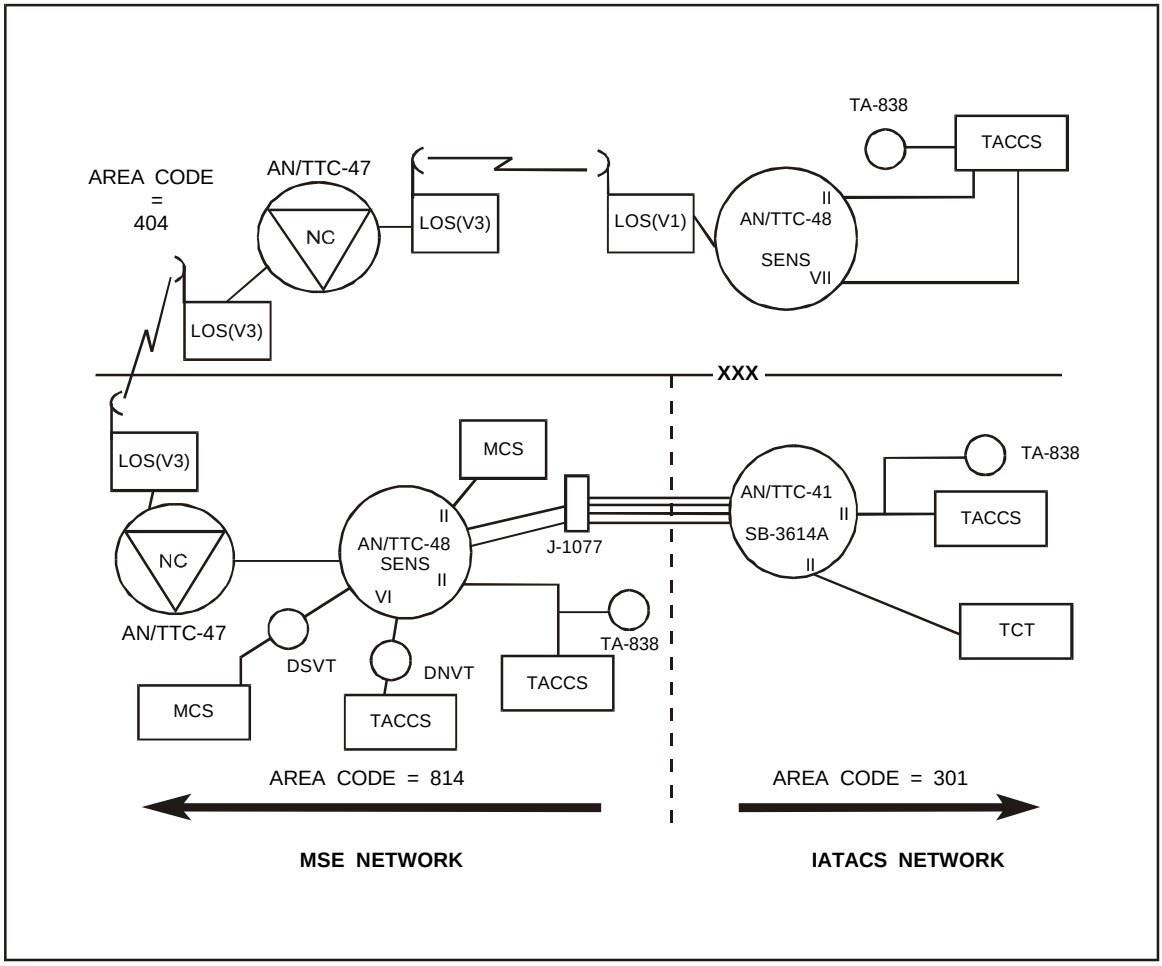

Figure B-4. MSE/IATACS Expanded Network

DATA COMMUNICATIONS

B-15. MCS data communications do not work across the MSE/IATACS boundary (digital/analog). TACCS communications are marginal due to frequency repeatability degradation above 2000 hertz (Hz). For passing data across the MSE/IATACS boundary, unused channels of the multichannel system connecting the MSE and IATACS switches are used. Method 3 provides four common-user analog trunks for MSE/IATACS connectivity which leaves eight unused channels that could be dedicated to MCS or TACCS gateway functions. CNR could also be used as a gateway to bridge the MSE/IATACS boundary.

B-16. If an MCS in the MSE network wanted to send a message to an MCS in the IATACS network, it would send the message to the MSE gateway MCS. The IATACS gateway MCS will examine the message header and nodal address and automatically route the call over channel 1 to the appropriate MCS user in the IATACS network.

B-17. Figure B-5 shows the setup for single MCS gateways.

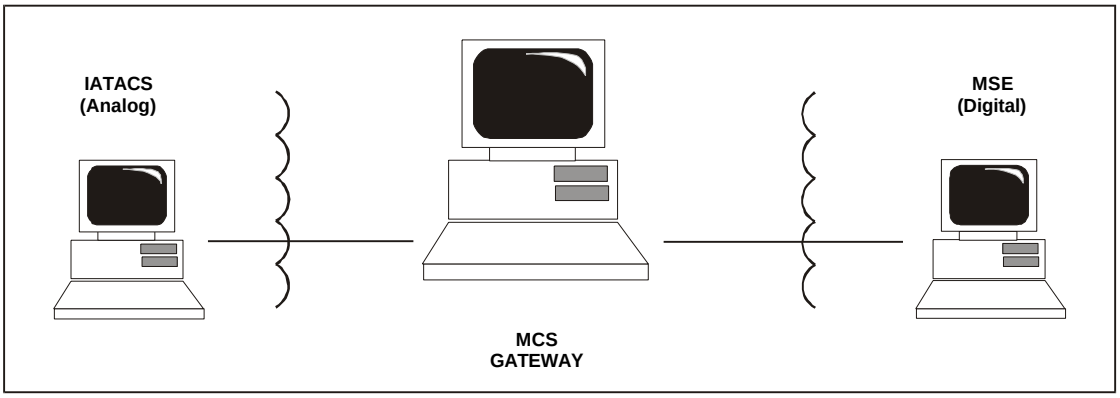

Figure B-5. Single MCS Gateway

B-18. Figure B-6 shows the setup for the dual MCS gateway.

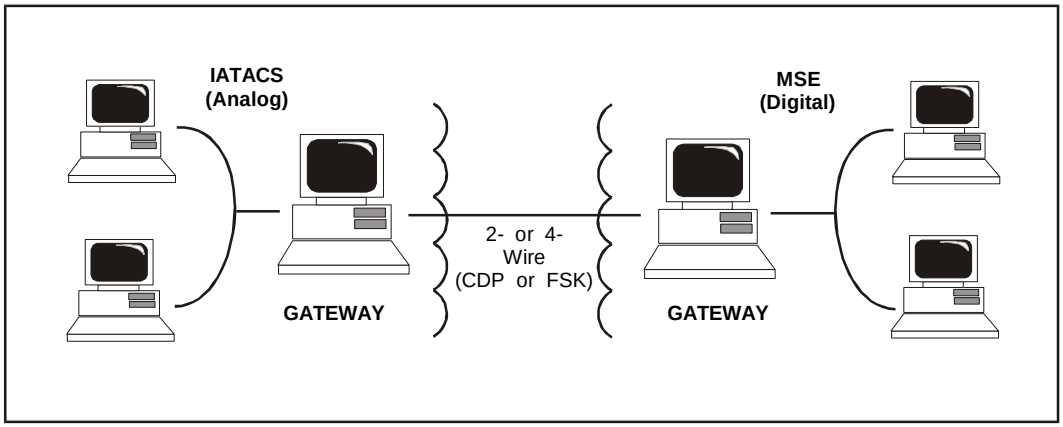

Figure B-6. Dual MCS Gateway

Appendix C

Communications Security Operations

This appendix gives an overview of COMSEC operations.

SECURE COMMUNICATIONS

C-1. The MSE network provides secure voice and data communications up to the SECRET level with special provisions for TOP SECRET/sensitive compartmented information (TS/SCI). This is accomplished by using a combination of physically protected wire lines and cryptographic equipment.

Note: When exchanging classified communications with a subscriber outside the MSE system but interfaced with MSE, MSE subscribers should ensure the distant user is communicating within an approved protective communications configuration.

PROTECTED WIRE LINES

C-2. Wire lines between subscribers and MSE switchboards are considered approved loops. Operators and users must monitor these wire lines to ensure only authorized subscribers access the network.

CRYPTOGRAPHIC SECURITY

C-3. Overall cryptographic security is the result of netted protection in trunk, orderwire, switch, and subscriber areas. Table C-1 describes equipment architecture and lists equipment allocations.

Trunk

C-4. Throughout the system, TEDs (KG-194/A) encrypt DTGs for transmission between switches.

Orderwire

C-5. The VINSON (KY-57) and the orderwire control unit (OCU) or communications modem (CM) provide secure, half-duplex communications to radio and cable links. The system also provides over-the-air rekey (OTAR) for MSE assemblages.

Switch

C-6. The automatic key distribution center (AKDC) (KGX-93A) provides the generation, storage, and transfer of COMSEC keys. Loop key generators (KG-112s) provide secure communications between the NC/LEN and MSRTs/wire line DSVT. They also protect the transfer of keys between NCs and LENs.

Table C-1. COMSEC Equipment Allocations

Assemblage/COMSEC Equipment	NCS	LENS	SENS	RAU	LOS	MSRT
AKDC, KGX-93A	1	1				
LKG, KG-112	8	8				
TED, KG-194A	15	3	1	1	1(V2)	
VINSON, KY-57	1	1	1	1	1	
DSVT, KY-68				1		1
MCU				8		1
SDNRIU, KY-90		1[1]	1[1]			
NCD, KYX-15	1	1				
ETD, KYK-13			1	1	1	1
KOK-12 or KOK-16	2[2]					

[1] Has provisions for the KY-90.

[2] Two per signal battalion.

Subscriber

C-7. The MSRT consists of an RT-1539(P)/G radio, mobile COMSEC unit (MCU), and a DSVT (KY-68). The X key overrides the M key and secures the signaling between the NCS and the DSVT. It does not encrypt the voice traffic transmission. The DSVT secures the connection to the NC/LEN. The SDNRIU (KY-90) provides a secure link between the MSE system and the secure CNR nets.

C-8. Additional crypto devices are allocated for generation, storage, transfer, and verification of crypto keys (see Table C-1).

NET CONTROL DEVICE (NCD)

C-9. The NCD (KYX-15) is used at NCSs and LENSs and stores 16 keys.

ELECTRONIC TRANSFER DEVICE (ETD)

C-10. The ETD (KYK-13) is used at all other locations and can store six keys.

SMART FILL DEVICE

C-11. The smart fill device (KOK-12 or KOK-16) is used for COMSEC key management at signal brigades and battalions. The KOK-12 or KOK-16 can identify COMSEC keys by displaying the assigned key tag number on its liquid crystal display (LCD) screen. The KOK-12 or KOK-16 can also store and transfer up to 160 COMSEC keys.

EQUIPMENT USE

C-12. The SCC-2 COMSEC key manager controls key management and distribution within the corps. He directs the PNS to generate all system common and user keys. Then, through a courier distribution system, certain keys are pre-positioned to leader NCs within the corps. Leader NC key managers, in turn, distribute a pre-positioned set to their supported NC/LENs. Each master NC/LEN link generates the unique TED internodal keys. The leader NC key manager directs the bulk transfer of these keys to the slave NC/LENs. Once the backbone network is stable, the SCC-2 COMSEC key manager directs the bulk transfer of all keys to each leader switch that does the same for their supported NC/LENs. Unit couriers pick up user keys from the corps key manager.

C-13. All key transactions except bulk transfer are recorded manually on COMSEC key management logs and reported through the distribution channels. Bulk transfer transactions are recorded automatically in each NC/LEN database and can be retrieved if necessary. Trunks are bulk encrypted through the TED (KG-194/A).

C-14. The Army Key Management System (AKMS) program consists of two systems that provide cryptographic keys, SOIs, and fills for CNRs. The Automated COMSEC Management and Engineering System (ACMES) software resides on laptop computers and is used by both theater and tactical units. The Army Electronic Generation and Distribution System (AEGADS) software resides on desktop computers and is used by strategic and sustainment base units. Both systems use automated net control devices (ANCDs) and key distribution devices (KDDs) to distribute SOIs and COMSEC variables and keys. The AKMS greatly reduces current dependence on paper-based keying materials.

C-15. Switch COMSEC functions include generating, storing, transferring, and activating COMSEC keys and providing traffic encryption. This is done in the NCS (LENS in an emergency only) using the LKG, AKDC, and TED during the key generation, distribution, and activation phases. The AKDC in the NCS generates, transfers, and activates keys. The AKDC is driven by software commands using the video display unit (VDU). The operator can also generate and transfer keys directly from the AKDC. Electronic keys are stored in the HUS. The HUS can store up to 512 variables (256 active and 256 reserve). The LKGs in the NCS and LENS provide key control and key transfer to support end-to-end encryption for DSVT subscribers on a per–call basis.

C-16. MSRT/subscriber COMSEC functions operate through a key loaded MCU within the RT-1539(P)/G radio and embedded COMSEC within the DSVT. Subscriber COMSEC functions include encrypting radio frequency signaling using the MCU. The DSVT COMSEC encrypts the subscriber's traffic. COMSEC protection at the secure subscriber level begins with the COMSEC keys. The subscriber's ETD (KYK-13) electronically loads the keys into the radio's MCU and the DSVT.

C-17. The analog engineer orderwire (EOW), inherent in each LOS radio, is used only for initializing the system. The orderwire is not encrypted and should only be used for unclassified traffic. After establishing the link, the operator switches to the DVOW. The orderwire voice is then encrypted through the VINSON (KY-57) located in the NCS, SENS, LENS, RAU, and LOS assemblages. The DVOW is also used for OTAR or transfer of COMSEC keys. However, this method is only used on an exceptional basis. When using the encrypted DVOW, traffic is not to exceed the SECRET level. When using DVOW for OTAR, a key encryption key (KEK) is used to pass the key.

KEY DESCRIPTION, DISTRIBUTION, INITIALIZATION, AND ACCOUNTABILITY

C-18. The AKDCs generate keys (except the S key) for the MSE system. Table C-2 lists the different types of keys. It also identifies the key, its use (such as subscriber's KY-68), the type of numeric or key encryption, its distribution, and a short description.

DISTRIBUTION

C-19. The courier method is used for initial key distribution. The S key distribution is a user responsibility. Used with the KOI-18s and KOK-16s, properly cleared personnel physically deliver electronic keys. Reliance on courier delivery will decrease as the AKMS is fielded.

C-20. The bulk transfer method results in the electronic transfer of keys from the designated HUS location(s) of one AKDC to the same type of HUS location(s) of another AKDC.

C-21. The OTAR method transfers keys to various assemblages. The DVOW encrypts the keys by using remote keying encryption (K key). Used with the NCD (KYX-15), the KY-57 can transfer keys to another KY-57 or to an ETD (KYK-13).

C-22. The electronic method is an operation, transparent to users, that downloads the X and V keys to the DSVT (using the U key).

C-23. The PNS generates corps common system operational keys.

INITIALIZATION

C-24. The division COMSEC material direct support activity (CMDSA)/DCOR stores the pre-positioned keys required for system initialization. On deployment, the trunk key establishes internodal links and the master switch is the controlling NCS. Once the TN key is loaded in each TED, the link is activated.

C-25. The COMSEC key manager oversees the generation of all COMSEC keys. He stores and distributes the keys to teams before deployment. Tables C-3 through C-7 show the appropriate key sets.

Table C-2. Key Descriptions

	KEY	TYPE	EQUIPMENT	DISTRIBUTION	DESCRIPTION
SUBSCRIBER KEYS	M	TEK	DSVT/KY-90/ RT-1539	Corps Common	Re-entry/initial entry.
			MCU	Corps Common	Used in the signaling and synchronization between the MCUs in the RAU and MSRT.
	V	TEK	DSVT/KY-90	Per Call	Unique per call associated with a DSVT/KY-90. Establishes end-to-end synchronization.
	U1 - U25	KEK	DSVT/KY-90	Corps Common	Used in transferring the V and X keys from the NCS/LENS to the terminal.
	U26 & U27	KEK	KY-68 NCS/LENS	One per subscriber determined by profile	Used to support TS/SCI users to the TYC-39 message switch.
	S	TEK	KY-68	Special Use	Generated and used by others to raise encryption level to TS/SCI (usually military intelligence (MI)).
TRUNK KEYS	TI	TEK	KG-194/A	Corps Common	Initialized nodal links.
	TN	TEK	KG-194/A	Pair-Wise Unique	TED nodal links.
	TG	TEK	KG-194/A	Pair-Wise Unique	TED gateway links.
	TE	TEK	KG-194/A	Corps Common	Used to secure extension links to SENs and RAUs.
ORDERWIRE KEYS	CNV (N)	KEK	KY-57	Corps Common	Used for securing voice over the orderwire.
	RKV (K)	TEK	KY-57	Corps Common	Used to encrypt COMSEC keys for OTAR transmission.
SWITCH KEYS	CIRK	KEK	NCS/LEN	Corps Common	Secures the V (per call) key between NCS/LENS.
	AIRK	KEK	NCS/LEN	Corps Common/ As required	Secures the V (per call) key between gateways.
	BT	KEK	NCS/LEN	Corps Common	Used in the bulk transfer of keys between switches.
	X	TEK	DSVT/KY-90	Corps Common	Used in the signaling and synchronization between the terminal and the NCS/LENS.
	MSRV	KEK	NCS AN/TYC-39	Message Switch Rekey (Special Use)	Used to encrypt the per-call key to the TYC-39 message switch.
	MSNV	TEK	NCS AN/TYC-39	Message Switch Net Key (Special Use)	Used to encrypt the synchronization signaling between MSE and the TYC-39 message switch.

Table C-3. NC Key Set

KEY	USE
TI	TED
BTc	Switch-to-switch (AKDC)
N	DVOW Traffic
K	DVOW Rekey
AIRK	As Required
MSRV	As Required
MSNV	As Required
TG	As Required
CNV	FM
RKV	FM

Table C-4. LEN Key Set

KEY	USE
TI	TED
BTc	Switch-to-switch (AKDC)
N	DVOW Traffic
K	DVOW Rekey
	RT-1539(P)/G
U	DSVT (LD(U))
CNV	FM
RKV	FM

Table C-5. SEN Key Set

KEY	USE
TE	TED
N	DVOW Traffic
K	DVOW Rekey
M	KY-90 (if required)
U	KY-90 (if required)
CNV	CNRI
CNV	FM
RKV	FM

Table C-6. RAU Key Set

KEY	USE
TEc	TED
N	DVOW Traffic
K	DVOW Rekey
CNV	FM
RKV	FM

Table C-7. Subscriber Key Set

KEY	USE
M	DSVT (LD(X)) RT-1539(P)/G
*U(I)	DSVT (LD(U))

*** I = U Net ID.**

C-26. The PNS directs initial start-up. The SYSCON switch technician assumes COMSEC key management tasks once the system is activated.

Predeployment

- The PNSs load network keys in the HUS locations.
- The pre-positioned keys stored in the KYX-15s are issued to NCSs/LENSs.
- Subscriber keys are issued to users IAW their COMSEC account numbers.
- The S6 stores keys in the user's KYK-13.
- Pre-positioned keys for the SEN, RAU, and LOS are issued.
- The NCS and LENS load pre-positioned keys in the HUS locations.

Deployment

- NCSs and LENS deploy and establish internodal links using T keys.
- The SENs deploy to support units.
- The RAUs deploy to support areas of mobile subscriber concentrations.
- Subscribers begin affiliation.

ACCOUNTABILITY

C-27. The MSE system requires key accountability for all key generation, transfer, and activation. The accountability process helps the manager accurately determine where the keys are maintained throughout the network. Accountability is accomplished through a combination of SCC-2 project screens, messages, and log entries.

C-28. Project screens within the SCC-2 display the cryptographic state of the network. Whenever a COMSEC project is approved, a record is created on the logbook teletype.

C-29. At the NCSs and LENSs, three screens allow the node COMSEC OIC to–

- Maintain key accountability.
- Use the display incoming transfer (DIT) and the display outgoing transfer (DOT) screens.
- Assign bulk transfer (ABT).

- Assign transfer list (ATL).
- Print copies of these screens.

C-30. Manual transfer of keys requires marking the fill device and creating and recording information on a log entry.

C-31. COMSEC key records (classified CONFIDENTIAL) are maintained for an appropriate period and then destroyed.

TASK ORGANIZATION

C-32. If task organization requires attaching units not previously aligned, all corps common keys and gateway keys must be either physically or electronically transferred (through secure means) to establish communications. (See Table C-1.)

AUTOMATIC KEY DISTRIBUTION CENTER

C-33. The AKDC houses all the keys generated at the NCS/LENS. Table C-8 shows an example of HUS locations and key tag assignments. Keys have A and B locations. The active key is on side A and the reserve key is on side B. SYSCON may authorize storing keys other than those listed.

Table C-8. Example of HUS Locations and Key Tag Assignments

KEY TAG	HUS A	HUS B	USE
C001	001	257	CIRK
	002	258	Spare
U003	003	259	Rekey 1
K028	028	284	KEK - OCU
N029	029	285	TEK - OCU
B032	032	288	BT Storage
T100	100	356	T Key
A126	126	382	AIRK
M224	224	480	M Key
X225	225	481	X Key

Appendix D

High-Speed Multiplexer

Fast and reliable access to data information is critical to a commander's success. The HSMUX card enhances the warfighters' ability to process data information on the battlefield. Enhanced NCs and SENs equipped with the HSMUX card have additional data ports and higher data rate terminations than non-enhanced NCs and SENs. This appendix covers the HSMUX card and the enhanced configurations of the SEN and NC.

HIGH-SPEED MULTIPLEXER CARD

D-1. The HSMUX card enhances the capabilities of the CM and provides the capability to terminate data rates higher than 512 kbps. The HSMUX provides up to four additional ports within a standard DTG. Depending on the configuration, these ports can provide up to four synchronous data circuit-terminating equipment (DCE) RS-422 (balanced) serial data links at 64, 128, or 256 kbps. Figure D-1 shows the HSMUX SEN configuration.

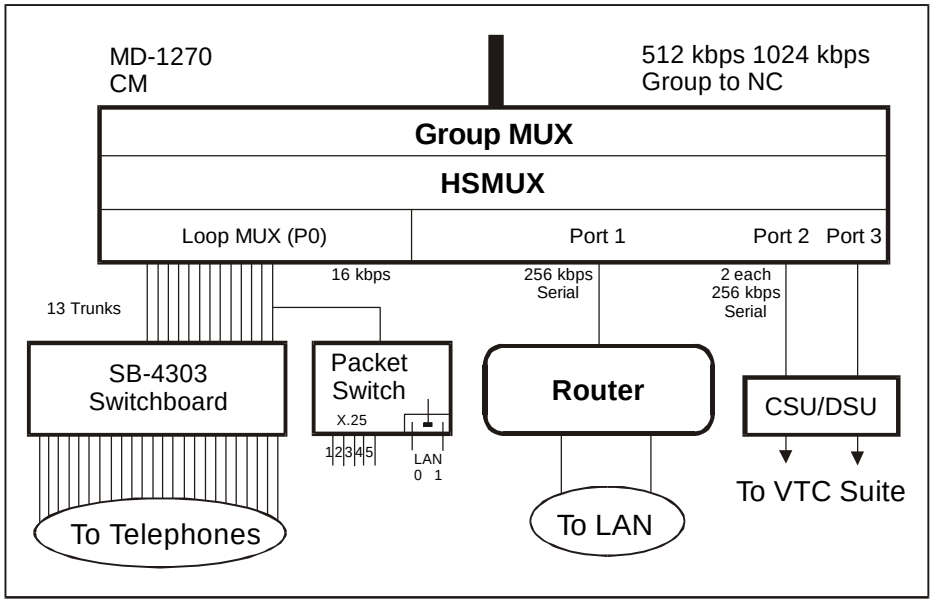

Figure D-1. HSMUX SEN Configuration

D-2. The HSMUX performs an inverse multiplexer function by taking the aggregate port rate (256 kbps) of each serial data circuit (router) and breaks it into individual 16 or 32 kbps channels on the DTG. Figure D-2 shows the inverse multiplexer.

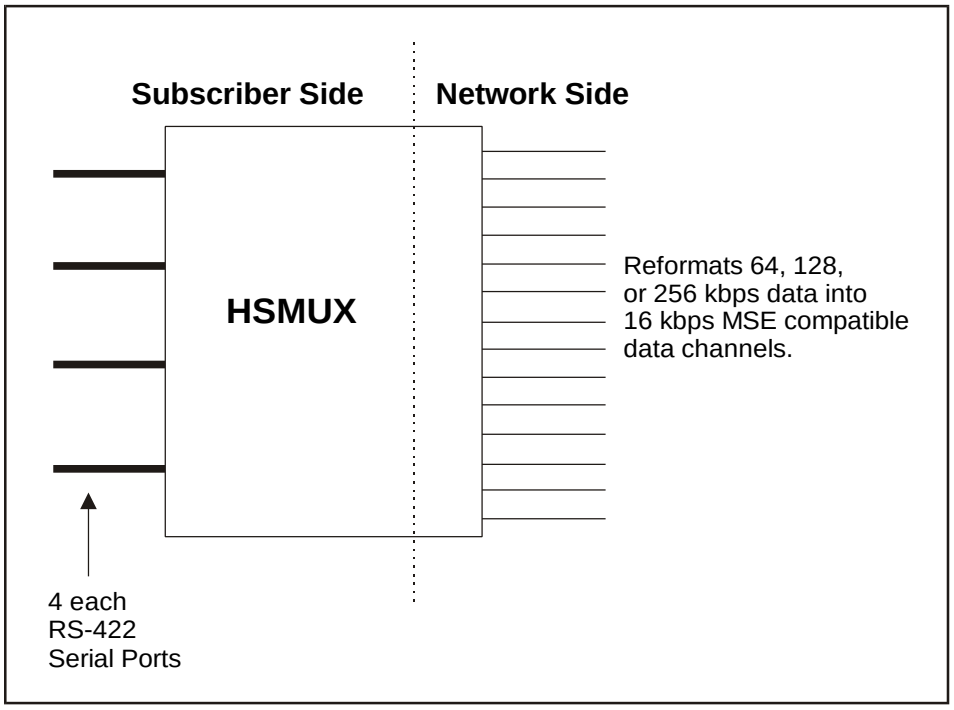

Figure D-2. Inverse Multiplexer

D-3. The HSMUX card replaces the A10 multiplexer (MX)/demultiplexer (DMX) card in the CM, and it provides four additional serial ports. The back plane of the A10 card is not wired for access outside the CM. The individual Diphase Loop Modem-A (DLPMA) card provides access to the patch panel for the original SEN trunks. A high-speed balanced interface card (HSBIC) provides access to the new high-speed ports without modifying the CM or LTU. The HSBIC replaces one of the DLPMA cards in the CM. The HSBIC terminates two of the four HSMUX ports and extends them to the patch panel instead of the four voice trunks. These serial circuits are then patched over to the line side of the patch panel so the circuit can be extended over 26 pair to a J-Box. Figure D-3 shows the HSMUX/HSBIC SEN signal flow.

ENHANCED SEN CONFIGURATION

D-4. The HSMUX enhancement provides standard MSE connectivity and two high-speed ports that terminate in a router and a channel service unit (CSU)/data service unit (DSU) used for serial video teleconferencing. The router and the CSU/DSU are safeguarded by a universal power supply (UPS). The UPS provides battery backup and acts as a DC inverter, drawing power off the vehicle's 24-volt electrical system. Figure D-4 shows the enhanced SEN configuration.

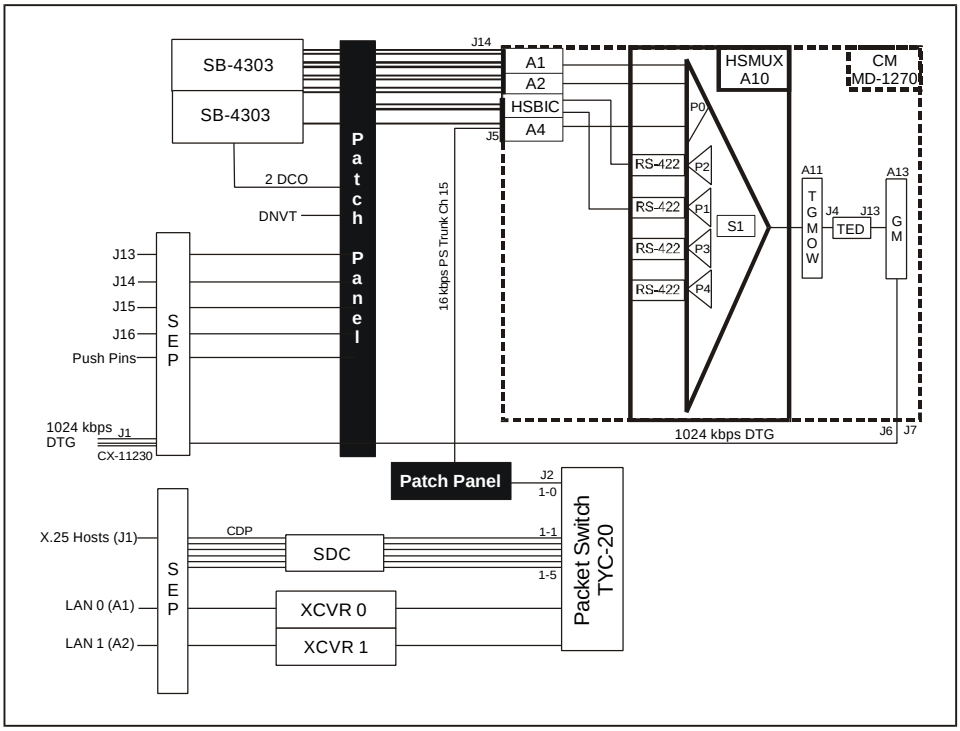

Figure D-3. HSMUX/HSBIC Signal Flow

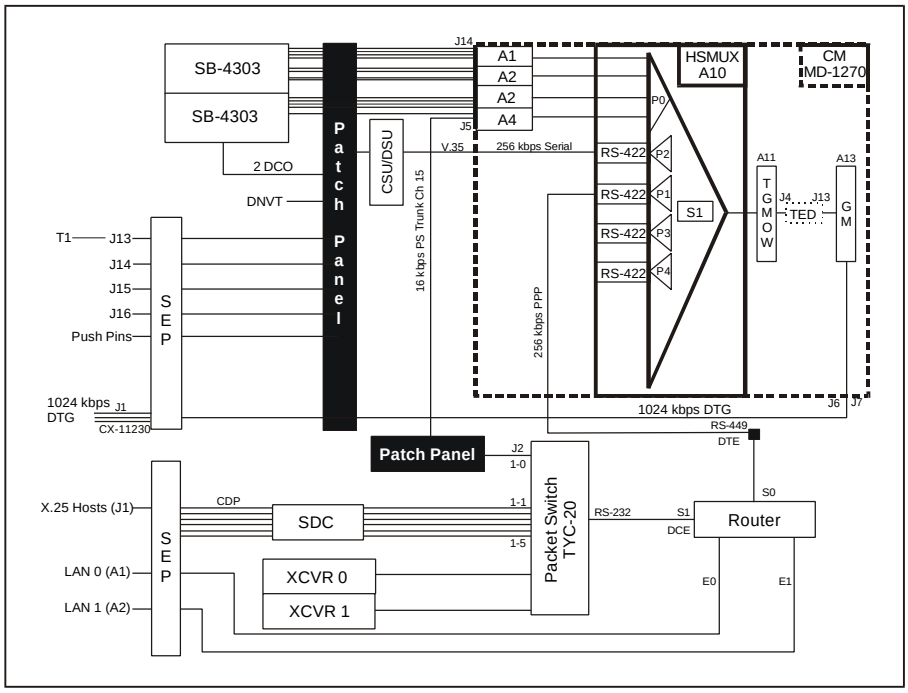

Figure D-4. Enhanced SEN Configuration/Signal Flow

D-5. The router is configured for two serial connections and two Ethernet connections. Ethernet transceivers (E0 and E1) connect to the router attachment unit interface (AUI) ports allowing for 10Base2 coaxial cable to extend into the TOC. LAN cables are routed behind the equipment rack to the inside cover of the LAN's SEP. The packet switch (IGW) connections to the SEP are disconnected, allowing the new coaxial cable from the router to have access to the outside LAN 0 and LAN 1 Bayonet Neill Concelman (BNC) connectors.

D-6. The router serial connections provide access to the backbone high-speed data network and the legacy TPN. Port 1 on the HSMUX card directly connects to Serial 0 on the router. The HSBIC is not used in this configuration to save the four voice trunks. A flat ribbon cable is fabricated to connect Port 1 of the HSMUX and is routed out the front cover of the CM. The ribbon cable is flat enough to allow the CM cover to partially close. This configuration provides 256 kbps data to the backbone routing network at the NC. This connection is via a channel reassignment of 16 channels (17-32) on the extension link DTG. The HSMUX at the SEN and NC provide the inverse multiplexing function and combine these channels to support a 256 kbps aggregate rate.

D-7. The packet switch is still used; however, a packet switch port (P0) now directly connects to the router (S1) via a DCE serial interface cable. This does require the packet switch port to be re-jumpered for slaving timing off the router. This packet switch to router connection provides a backdoor to the router from the TPN. However, the primary route for all data out of the SEN is via the serial interface (S0) to the HSMUX card Port 1.

D-8. The CSU/DSU is configured to terminate and/or extend up to four ports of the HSMUX. Presently, HSMUX Port 2 is terminated by the CSU/DSU using V.35 interface. The CSU/DSU converts this eight-wire balanced nonrestrictive zone (NRZ) circuit into a two-wire circuit that can extend up to 2 miles over standard WF-16. This does require a CSU/DSU at the TOC to terminate the circuit and convert the two-wire signal back to RS-422, which is required by the VTC system. The two wires leaving the CSU/DSU inside the SEN are presently spliced into a patch cord that allows the circuit to be patched down a 26-pair via the patch panel.

D-9. The HSMUX multiplexes the 256 kbps router data, the 256 kbps VTC data, and the SEN standard trunks into a 1024 kbps DTG. The settings of the HSMUX, the CM, and the LOS radio must be changed to reflect this data rate/configuration. The HSMUX card (A10) is manually configured from a predefined set of port options. A set of DIP SWITCHES (label S1) on the card determines the group rate of the DTG and each individual port rate. See Table D-1 for S1 settings with appropriate port/channel assignments.

D-10. The HSMUX card has several peculiarities. It has two 21-pin connectors (J2 and J4) that provide access to the data ports. Each connector provides access to two ports. Each port provides an eight-wire balanced NRZ full-duplex data and timing interface. The ports are configured as DCE, which provide transmit and receive timing for the terminal device. This requires the connecting circuit (data terminal equipment (DTE)) to slave timing from the HSMUX. The connector to each port is easily misaligned considering there is no set keying. Each internal cable has either an 8- or 10-socket box connector at each end. If a 10-socket head is used, two sockets on the box connector remain empty. These two empty sockets should always be to the TOP. Extreme caution should always be used to connect the box connector to these extremely fragile pins. As mentioned earlier, the ports are manually configurable by DIP SWITCHES (S1) on the HSMUX card and these switches are read right to left. Figure D-5 gives the layout of the HSMUX card.

Table D-1. HSMUX (16 kbps Channel Rate) Port Options

S1 Settings 8 7 6 5 4 3 2 1	Group Rate	P0[1]	P1	P2	P3	P4	ACR P1	ACR P2	ACR P3	ACR P4
0 0 1 0 0 0 0 0	256K	11	64K	----	----	----	13-16			
0 0 1 0 0 0 1 0	288K	9	128K	----	----	----	11-18			
0 0 0 0 0 0 1 0	512K	15	256K	----	----	----	17-32			
0 0 0 0 0 0 0 1	512K	15	128K	128K	----	----	17-24	25-32		
0 0 0 0 0 0 1 1	512K	15	128K	64K	64K	----	17-24	25-28	29-32	
0 0 0 0 0 1 0 0	576K	3	256K	256K	----	----	5-20	21-36		
0 0 0 0 0 1 0 1	576K	3	128K	128K	128K	128K	5-12	13-20	21-28	29-36
0 0 0 0 0 1 1 0	576K	19	64K	64K	64K	64K	21-24	25-28	29-32	33-36
0 0 0 1 1 0 1 0[2]	**1024K**	**15**	**256K**	**256K**	**256K**	**----**	**17-32**	**33-48**	**49-64**	
0 0 0 1 1 0 1 1	1024K	31	128K	128K	128K	128K	33-48	49-56	57-64	
0 0 0 1 1 1 0 1	1152K	7	256K	256K	256K	256K	9-24	25-40	41-56	57-72
0 0 1 1 1 1 1 1	2048K	35	256K	256K	256K	256K	37-52	53-68	69-84	85-100

[1] P0 is standard SEN channels (not trunks) not including Channel 1 Loop Signaling Channel (TT-119).

[2] The bolded line is our present standard which provides three ports at 256 kbps while continuing to support the SEN's normal trunk capability (13 voice/1 packet).

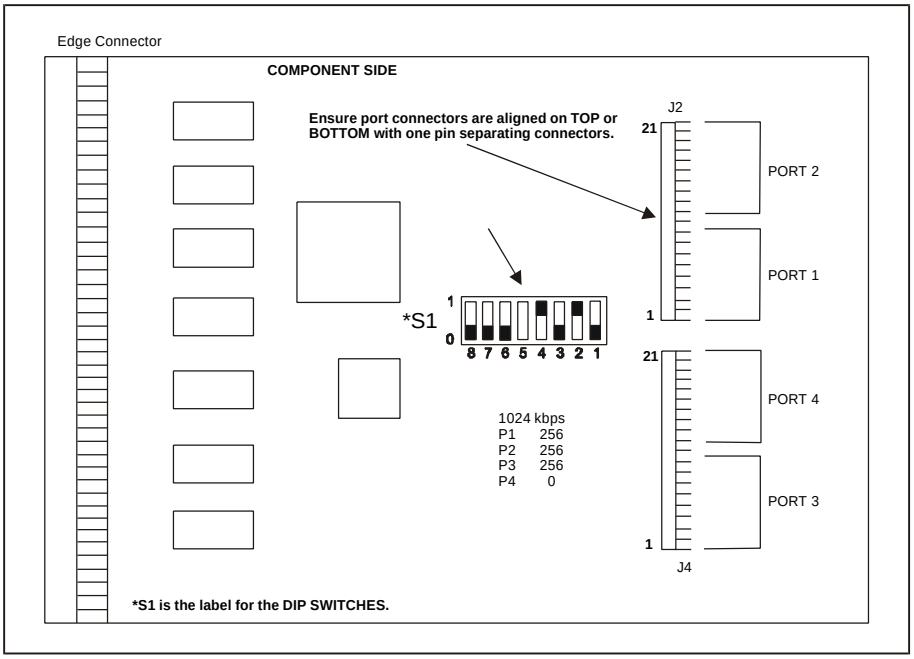

Figure D-5. HSMUX Card Layout

ENHANCED NC CONFIGURATION

D-11. The NC is an integral piece to the enhanced SEN configuration. The output of the HSMUX card is a 1024 kbps time-division multiplexed DTG (16 kbps 64 channels). The NC processes the DTG as a normal group with channels 2-14 terminated as SEN trunks (TT-86) and channel 15 as a packet trunk. The remaining 48 channels must be extended to their predetermined destination via channel reassignments. The HSMUX card at the SEN allocates channels 17-32 on the DTG for the router serial port 1. This port is predetermined to terminate on Serial 0, 1, 2, or 3 of the NC's router and is appropriately channel reassigned to the NC HSMUX dedicated for router connectivity. The HSMUX card at the SEN could also allocate channels 33-48 on the DTG for the VTC circuit. This circuit is usually destined for another SEN either off the same NC or one across the network. These channels are reassigned to the appropriate internodal (channels 49-64) or extension link DTG (channels 33-48).

D-12. The NC HSMUX configuration is significantly different than a SEN. The mission of the HSMUX in the NC is to inverse multiplex the individual channels from a SEN/NC DTG to an aggregate 256 kbps serial link. These links provide data connectivity between various network routers. This configuration provides a robust data network compared to the TPN. The CM in the NC can only terminate four HSMUX ports and one packet switch host trunk interface (PSHTI) port. Potentially, two ports for internodals, two ports for HSMUX extension links, and a port for a T-20 interface. See Figure D-6 for the NC HSMUX configuration.

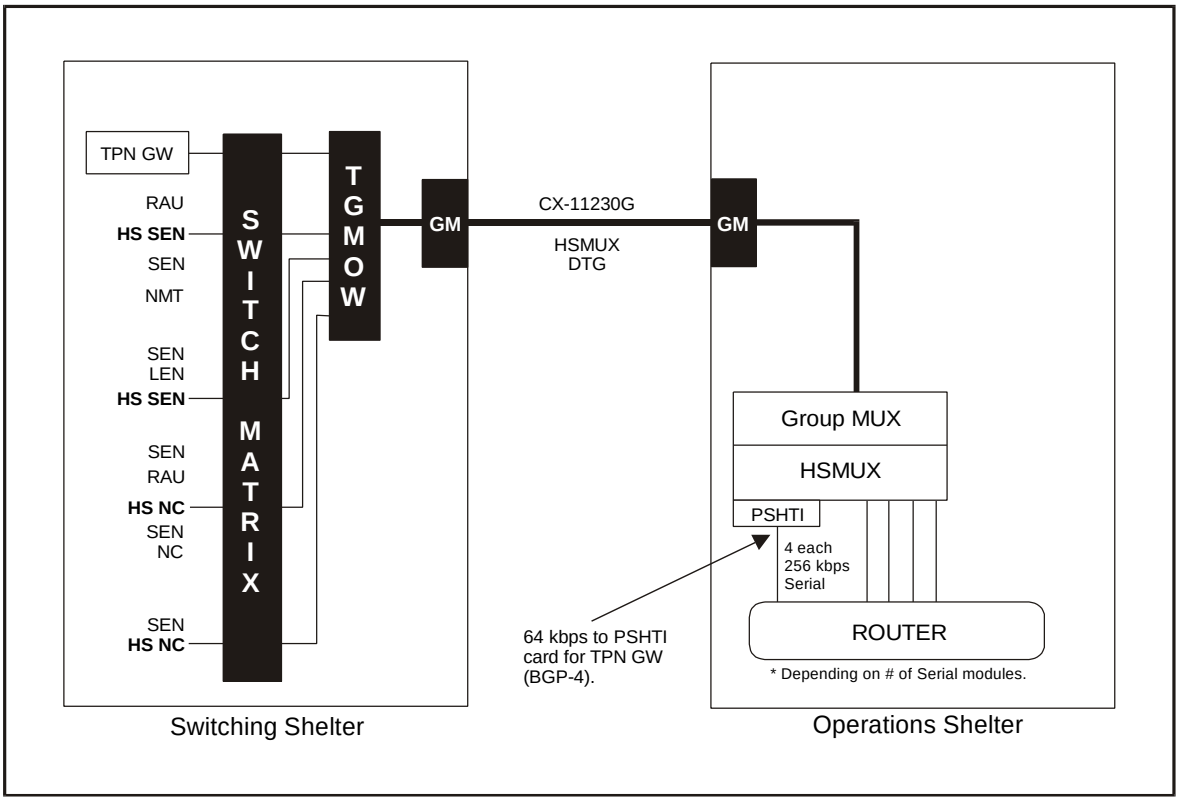

Figure D-6. NC HSMUX Configuration

D-13. The NC's CM requires a local DTG at 1152 kbps (depending on port configuration). The DTG is used to channel reassign internodal and/or extension link HSMUX router ports to the NC. The DTG comes off the switching shelter SEP and extends to the operations shelter via CX-11230. This does require special modification to the operations shelter's SEP.

D-14. The NC (unlike the SEN) CM uses two HSBICs in slots A3 and A4. These two HSBICs extend the four HSMUX ports out the back of the CM to the J5 connector. Cables are also fabricated to extend these connectors to the router's DCE serial cables. A separate cable connected to J14 extends the PSHTI card in slot A1 to Serial 7 of the router. Figure D-7 shows the NC signal flow.

D-15. A HSMUX network does require multiple changes to the MSE standard database to accommodate high-speed extension links above 256 kbps and the local CM. Figure D-8 shows a proposed HSMUX standard database.

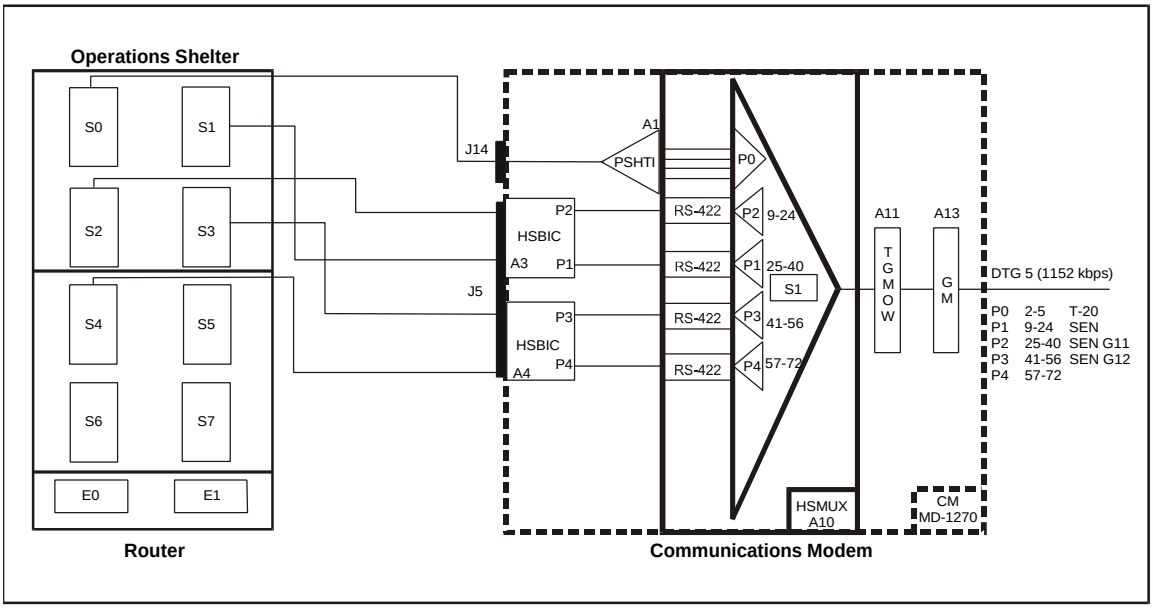

Figure D-7. NC Signal Flow

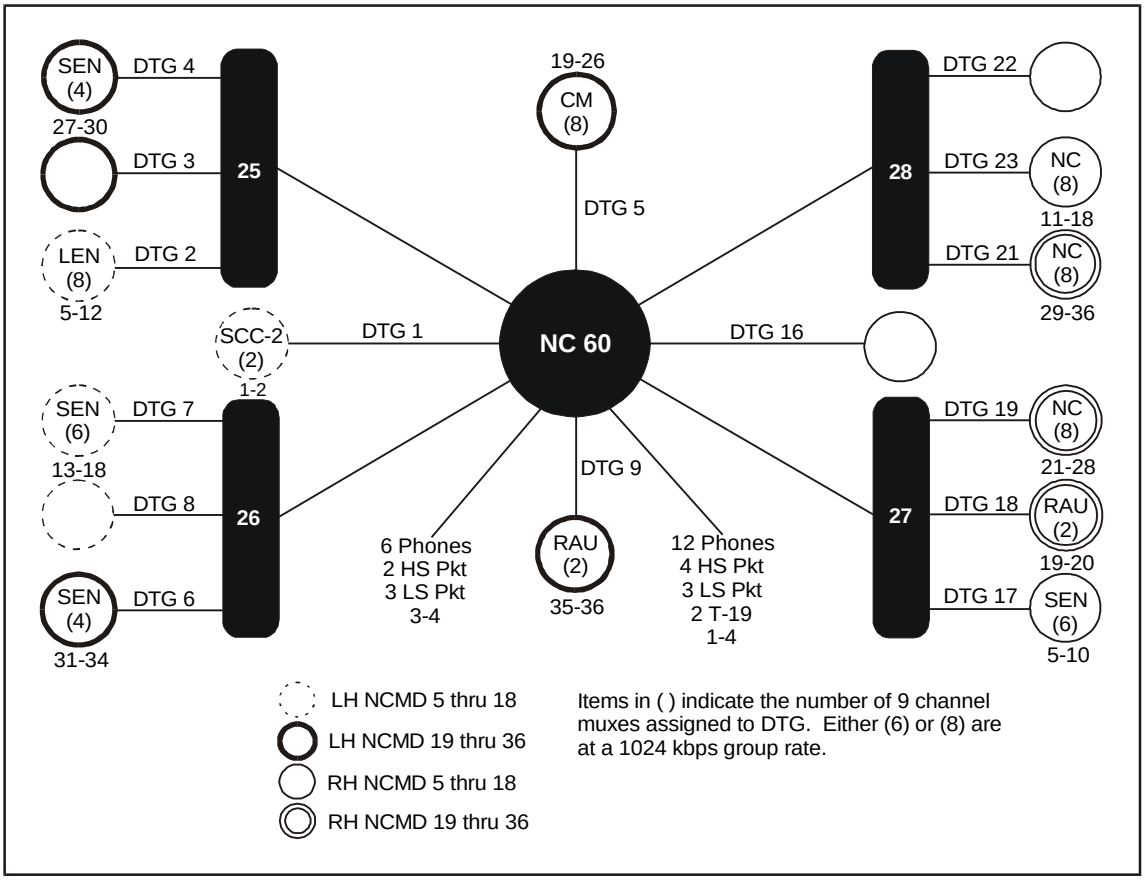

Figure D-8. HSMUX Standard Database

Glossary

AAMDC	Army Air Missile Defense Command
AAP	automatic asset placement
ABCS	Army Battle Command System
ABN	airborne
ABT	assign bulk transfer
ACMES	Automated COMSEC Management and Engineering System
ACR	armored cavalry regiment
ACUS	Area Common User System
ADA	air defense artillery
ADDS	Army Data Distribution System
ADI	Air Defense Interface
ADP	automatic data processing
ADRG	ARC-Digitized Raster Graphics (ARC is a term used to designate linear features on a digital map.)
AEGADS	Army Electronic Generation and Distribution System
AF	Air Force (USAF)
AFATDS	Advanced Field Artillery Tactical Data System
AIRK	area interswitch rekey
AIS	automated information system
AKDC	automatic key distribution center
AKMS	Army Key Management System
ALOC	administrative/logistics operations center
ALOG	analog switch
A&MD	air and missile defense
AMDPCS	Air and Missile Defense Planning and Control System
ANCD	automated net control device
AO	area of operations
AR	Army; Army regulation (when followed by a number)
ARC	A term used to designate linear features on a digital map.
ASAS	All Source Analysis System

ASB	area signal battalion
ASR	assign SEN/RAU/NMT
ATACS	Army Tactical Communications System
ATL	assign transfer list
ATM	asynchronous transfer mode
attn	attention
AUI	attachment unit interface
AUTODIN	automatic digital network
AVTOC	aviation tactical operations center
az	azimuth
BAM	basic access module
BATCON	battalion control
bde	brigade
BCOR	brigade COMSEC office of record
bn	battalion
BNC	Bayonet Neill Concelman [Electronics] (connector used with coaxial cable, named after inventor)
bps	bytes per second
BSM	battlefield spectrum management
BT	bulk transfer
C2	command and control
C3	command, control, and communications
C4I	command, control, communications, computers and intelligence
CBCS	common battery circuit switching
CBR	constant bit rate
CCA	circuit card assembly
CCOR	corps COMSEC office of record
CCES	contingency communications extension switch
CCP	contingency communications package
CCPS	contingency communications parent switch
CD	compressed dial
CDIG	commercial digital
CD-ROM	compact disk-read only memory
CDL	compressed dialing list

CDP	conditioned diphase
CDS	compact digital switch
CE	communications-electronics
CECOM	Communications-Electronics Command
CEOI	communications-electronics operating instructions
CEWI	combat electronic warfare intelligence
Ch	channel
CHS	common hardware and software
CINC	Commander-in-Chief
CIRK	common interswitch rekey
CJA	Civil/Judge Advocate
CJCSM	Chairman, Joint Chiefs of Staff Memorandum
ckv	common key variable
clk	clock
CM	communications modem
cmd	command
CMDSA	COMSEC material direct support activity
CNCE	communications nodal control element
CNR	combat net radio
CNRI	combat net radio interface
CNV	common net variable
COE	common operating environment
CofS	Chief of Staff
comm	commercial
COMSEC	communications security
CONPLAN	contingency plan
CONUS	continental United States
coord	coordinate(s)
COSCOM	corps support command
CP	command post
CPU	central processing unit
CRF	channel reassignment function
CS	combat support
CSCE	communication system control element

CSP	call service position
CSS	combat service support
CSSCS	combat service support control system
CSU	channel service unit
CT	communications terminal
CTASC-I	Corps/Theater Automatic Data Processing Service Center Phase-I
CTAPS	Contingency Tactical Air Control Planning System
CZ	canal zone
DA	Department of the Army
DAS	direct access service
DB	database designator
dB	decibel(s)
dBm	decibels above (or below) one milliwatt
dBw	decibels referred to one watt
DC	direct current
DCE	data circuit-terminating equipment
DCNRI	dismounted combat net radio interface
DCO	dial central office
DCOR	division COMSEC office of record
desig	designator
DES	dismounted extension switch
DET	Detachment
DGS	display group status
DIBTS	digital in-band trunk signaling
DIG	digital
DII	Defense Information Infrastructure
DIL	display interswitch link
DISCOM	division support command
DISN	Defense Information Systems Network
DIT	display incoming transfer
div	division
DLPMA	Diphase Loop Modem-A
DLOS	dismounted line-of-sight
DMAIN	division main (command post)

DMS	Defense Messaging System
DNI	digital NATO interface
DNMF	dismountable node management facility
DNS	domain name server
DNVT	digital nonsecure voice terminal
DOD	Department of Defense
DOT	display outgoing transfer
DREAR	division rear
DS	direct support
DSB	division signal battalion
DSN	Defense Switching Network
DSU	data service unit
DSVT	digital secure voice terminal
DTA	data terminal adapter
DTAC	division tactical (command post)
DTE	data terminal equipment
DTED	digitized terrain elevation data
DTG	digital transmission group
DTH	down-the-hill
DTMF	dual-tone multifrequency
DVOW	digital voice orderwire
ea	each
EAC	echelons above corps
ECB	echelons corps and below
EGRU	EPLRS grid reference unit
EOW	engineer orderwire
EP	electronic protection
e-mail	electronic mail
EPLRS	Enhanced Position Location Reporting System
E&M	ear and mouth (receive and transmit leads of a signaling system)
ETD	electronic transfer device
ETGMOW	enhanced transmission group modem and oderwire
EUB	essential user bypass
EW	electronic warfare

ext	extension
FA	field artillery
FAADC3I	Forward Area Air Defense Command, Control, Communications, and Intelligence
FAX	facsimile
FBCB2	Force XXI Battle Command - Brigade and Below
FDX	full duplex
FEBA	forward edge of the battle area
FEC	forward error correction
FES	force entry switch
FLOT	forward line of own troops
FM	frequency modulated; field manual (when followed by a number)
FRAGO	fragmentary order
freq	frequency
FSB	fire support battalion
FSEN	future small extension node
FSK	frequency shift keying
G1	Assistant Chief of Staff, G1 (Personnel)
G2	Assistant Chief of Staff, G2 (Intelligence)
G3	Assistant Chief of Staff, G3 (Operations and Plans)
G6	Assistant Chief of Staff, G6 (Principal Staff Officer)
GBNP	Global Block Numbering Plan
GCCS-A	Global Command and Control System-Army
GDB	global database
GDB MGR	global database manager
GDU	graphic display unit
GE	Germany
GHz	gigahertz
GLPAL	global preaffiliation list
GLU	group logic unit
GM	group modem
GS	general support
GSPM	Global Standard Profile Matrix
GTE	General Telephone and Electric

GTEAM	Global Team Labeling
GW	gateway
HCLOS	high capacity line of sight
HFR	high frequency radio
HHC	Headquarters and Headquarters Company
HMMWV	high mobility multipurpose wheeled vehicle
HQ	headquarters
HS	high speed
HSBIC	high-speed balanced interface card
HSMUX	high-speed multiplexer
http	HyperText Transfer Protocol
HUS	hardened unique storage
HVA	high voltage assembly
Hz	hertz
IAP	interactive asset placement
IATACS	Improved Army Tactical Communications System
IAW	in accordance with
ICAP	Integrated Communications Access Package
ID	identify/identification
IDNX	Integrated Digital Network Exchange
IEEE	Institute of Electrical and Electronics Engineers
IGW	integral gateway
IMS	Integrated Management System
INC	internet controller
info	information
IP	internet protocol
IPR	internet protocol router
ISB	initial staging base
IST	Integrated Systems Technology
ISYSCON	integrated system control
I/O	input/output
JCSE	Joint Communications Support Element
JITC	Joint Interoperability Testing Center
JNMS	Joint Network Management System

JOG-A	Joint Operations Graphics-Air
JOG-G	Joint Operations Graphics-Ground
JTF	joint task force
JTIDS	Joint Tactical Information Distribution System
JWICS	Joint Worldwide Intelligence Community System
kbps	kilobits per second
KDD	key distribution device
KEK	key encryption key
km	kilometer(s)
KOK	key operating key
Kw	kilowatt(s)
LAN	local area network
LANET	Lucent Limitless ATM Network
LBS	local base station
LCCES	light contingency communications extension switch
LCCP	light contingency communications package
LCD	liquid crystal display
LDR	leader
LEN	large extension node
LENS	large extension node switch
LH	left hand
LG	loop group
LKG	loop key generator
LOS	line-of-sight
LOSH	line of sight (high capacity)
LOSL	line-of-sight link
LOSM	line of sight (Marine Corps)
LP BK	loop back
LPVM	legacy PTT voice module
LRAU	local radio access unit
LRM	low-rate multiplexer
LS	low speed
LTU	line termination unit
mbps	megabytes per second

MC	Marine Corps
MCS	Maneuver Control System
MCU	mobile COMSEC unit
MDID	MSE data interface device
MDTG	multiplex digital transmission group
Mech	mechanized
METT-T	mission, enemy, terrain, troops, and time available
mgt	management
MHz	megahertz
MI	military intelligence
misc	miscellaneous
MLS	multilevel security
MOOTW	military operations other than war
MOS	military occupational specialty
MPM	mission plan management
MS	message switch
MSE	mobile subscriber equipment
msg	message(s)
MSNV	message switch net key
MSR	main supply route
MSRT	mobile subscriber radiotelephone terminal
MSRV	message switch rekey
MTA	message transfer agent
MTCC	modular tactical communications center
mux	multiplex/multiplexer
MX/DMX	multiplexer/demultiplexer
N/A	not applicable
NAI	NATO analog interface
NATO	North Atlantic Treaty Organization
NBC	nuclear, biological, chemical
NC	node center
NCA	National Command Authority
NCD	net control device
NCMD	nine-channel multiplex-demultiplex

NCOIC	Noncommissioned Officer in Charge
NCS	node center switch
NCT	network control terminal
NG	Army National Guard
NIC	network interface card
NIMA	National Imagery and Mapping Agency
NIPRNET	Nonsecure Internet Protocol Router Network
NMC	network management center
NMF	node management facility
No	number
NPE	network planning and engineering
NPT	network planning tool
NRI	net radio interface
NRZ	nonrestrictive zone
NS	node switch
NSG	node switching group
NSW	nonsecure warning
obj	object
OCONUS	outside Continental United States
OCU	orderwire control unit
OIC	Officer in Charge
ONC	Operational Navigation Charts
OPCON	operational control
OPLAN	operation plan
OPORD	operation order
ops	operations
ORR	operational readiness report
OTAR	over-the-air rekey
PAL	preaffiliation list
PBX	private branch exchange
PAT	Patriot
PCL	preprogrammed conference list
PCM	pulse code modulation
ph	telephone

pkt	packet
plt	platoon
PNS	primary node switch
POC	point of contact
pol	polarization
PPP	point-to-point protocol
PS	packet switch
PSHTI	packet switch host trunk interface
PSN	packet switch network
PUB	Publication
QDISPL	Queue Display
RARP	reverse address resolution protocol
RAS	remote access switch
RAU	radio access unit
RBECS	Revised Battlefield Electronics CEOI (Communications-Electronics Operating Instructions) System
rcv	receive
RBS	remote base station
REC	radio electronic combat
RECAP	recapitulation
recon	reconnaissance
ref	reference
retrans	retransmission
RF	radio frequency
RH	right hand
RKV	rekeying variable
RLGM	remote loop group multiplexer
RLOS	remote line-of-sight
RMC	remote multiplexer combiner
RR	radio relay
RRAU	remote radio access unit
RSC	remote switching center
RSS	routing subsystem
RSS-D	downsize routing subsystem

S2	Intelligence Officer (US Army)
S3	Operations and Training Officer (US Army)
S4	Supply Officer (US Army)
S6	Communications Officer (US Army)
SAR	satellite access request
sat	satellite
SB	switchboard
SC	Signal Corps
SCC	system control center
SCC-2	system control center-2
SCG	switching control group
SDC	signal data converter
SDNRI	secure digital net radio interface
SDNRIU	secure digital net radio interface unit
SEN	small extension node
SENS	small extension node switch
SEP	signal entry panel
SGT	Sergeant
SHF	super high frequency
SICPS	standard integrated command post system
sig	signal
SINCGARS	Single-Channel Ground and Airborne Radio System
SIPRNET	Secure Internet Protocol Router Network
SLM	subscriber list management
SMART-T	Secure Mobile Antijam Reliable Terminal - Tactical
SMU	switch multiplex unit
SMUX	SMART mux
SNS	secondary node switch
SOAC	Signal Officer Advanced Course
SOBC	Signal Officer Basic Course
SOF	Special Operations Forces
SOI	signal operating instructions
SONET	synchronous optic network
SOP	standing operating procedure

SPARC	Scalable Processor ARChitecture (Laptop)
spt	support
SRC	standard requirements code
SSI	standing signal instructions
SSS	signal shelter switch
STANAG	Standardization Agreement
STAR-T	Super High Frequency Tri-band Advanced Range Extension Terminal
STEP	Standardized Tactical Entry Point
STU	secure terminal unit
SVM	secure voice module
sw	switch
SYNCH	synchronize/synchronization
sys	system
SYSCON	system control
TACCS	Tactical Army Combat Service Support (CSS) Computer System
TACFAM	tactical frequency assignment model
TACSAT	tactical satellite
TADIL	Tactical Data Information Link
TAXI	transparent asynchronous transceiver interface
TC	technical control
TCP	transmission control protocol
TCT	tactical communications terminal
TDM	time division multiplex
TDSG	time division switching group
TDSGM	time division switching group (modified)
TECHCON	technical control
TED	trunk encryption device
TEK	trunk encryption key
TG	trunk group
TGC	trunk group cluster
TGM	tactical group multiplexer
TGMD	trunk group multiplex/demultiplex
TGMOW	transmission group modem and orderwire

THAAD	Theater High Altitude Air Defense
TLC	traffic load control
TI	Tactical Internet
TLDF	team label data file
TLM	topographic line maps
TM	technical manual
TMD	theater missile defense
TMG	tactical multinet gateway
TMIF	Tactical MSE Interface Family Digital Interface
TNS	tactical name server
TOC	tactical operations center
TOE	table(s) of organization and equipment
TP	telephone
TPA	tactical packet adapter
TPC	tactical pilotage charts
TPN	tactical packet network
TPS	tactical packet switch
TRADOC	Training and Doctrine Command
TRI-TAC	Tri-Service Tactical Communications
TRL	tropospheric link
tropo	tropospheric scatter
TRT	tropospheric terminal
TSC(A)	Theater Signal Command (Army)
TSOP	tactical standing operating procedure
TS/SCI	TOP SECRET/sensitive compartmented information
TSB	trunk signaling buffer
TSL	tactical satellite link
TST	tactical satellite terminal
TTA	tactical terminal adapter
tty	teletype
UCMJ	Uniform Code of Military Justice
UHF	ultra high frequency
UPS	universal power supply
US	United States (of America)

USAF	United States Air Force
USAR	United States Army Reserve
USARSO	United States Army Forces Southern Command
USASOC	United States Army Special Operations Command
USMC	United States Marine Corps
USN	United States Navy
v	volt(s)
VAC	volts of alternating current
VCI	virtual circuit identifier
VDU	visual display unit
VHF	very high frequency
VMLI	line interface card
VPI	virtual path identifier
VTC	video teleconference
WAN	wide area network
WIN	Warfighter Information Network
WIN-T	Warfighter Information Network - Terrestrial
WWW	World Wide Web
xcvr	receiver
xmit	transmit
ZR	zone restriction
ZRL	zone restriction list

Bibliography

AR 5-12. *Army Management of the Electromagnetic Spectrum*. 1 October 1997.

AR 25-1. *The Army Information Resources Management Program*. 25 March 1997.

AR 310-25. *Dictionary of United States Army Terms* (short title: AD) (reprinted w/basic incl C1). 15 October 1983.

AR 310-50. *Authorized Abbreviations and Brevity Codes*. 15 November 1985.

AR 380-5. *Department of the Army Information Security Program*. 25 February 1988.

AR 380-19. *Information Systems Security*. 27 February 1998.

AR 380-40. *(O) Policy for Safeguarding and Controlling Communications Security (COMSEC) Material (U)*. 1 September 1994.

DA Form 2028. *Recommended Changes to Publications and Blank Forms*. 1 February 1974.

DA Pam 25-30. *Consolidated Index of Army Publications and Blank Forms* (Issued Quarterly) (CD-ROM) (No printed copies exist). 1 January 1999.

DA Pam 310-35. *Index of International Standardization Agreements*. 15 December 1978.

CJCSM 6321.07A series. *Manual for Employing Joint Communications and Systems Joint Network Management and Control*. 24 January 1997.

FM 11-32. *Combat Net Radio Operations*. 15 October 1990.

FM 11-41. *Signal Support: Echelons Corps and Below (ECB)*. 18 December 1991.

FM 11-43. *The Signal Leader's Guide*. 12 June 1995.

FM 11-50. *Combat Communications Within the Division (Heavy and Light)*. 4 April 1991.

FM 12-6. *Personnel Doctrine*. 9 September 1994.

FM 24-1. *Signal Support in the AirLand Battle*. 15 October 1990.

FM 24-11. *Tactical Satellite Communications*. 20 September 1990.

FM 24-17. *Tactical Records Traffic System (TRTS)*. 17 September 1991.

FM 24-18. *Tactical Single-Channel Radio Communications Techniques*. 30 September 1987.

FM 24-22. *Communications-Electronics Management System (CEMS)*. 30 June 1977.

FM 24-24. *Signal Data References: Signal Equipment*. 29 December 1994.

FM 24-33. *Communications Techniques: Electronic Counter-Countermeasures.* 17 July 1990.

FM 24-35. *(O) Signal Operation Instructions "The SOI."* 26 October 1990.

FM 24-40. *Tactical Visual Information Doctrine {FMFM 3-8}.* 12 December 1991.

FM 25-100. *Training the Force.* 15 November 1988.

FM 71-100. *Division Operations.* 28 August 1996.

FM 100-5. *Operations.* 14 June 1993.

FM 100-15. *Corps Operations.* 29 October 1996.

FM 100-16. *Army Operational Support.* 31 May 1995.

FM 100-20. *Military Operations in Low Intensity Conflict {AFP 3-20}.* 5 December l990.

FM 101-5. *Staff Organization and Operations.* 31 May 1997.

FM 101-5-1. *Operational Terms and Graphics {MCRP 5-2A}.* 30 September 1997.

FM 700-80. *Logistics* (reprinted w/basic incl C1). 15 August 1985.

Joint Pub 0-2. *Unified Action Armed Forces (UNAAF).* 24 February 1995.

Joint Pub 1. *Joint Warfare for the US Armed Forces.* 10 January 1995.

TM 11-5800-216-10-1. *System Manual for Mobile Subscriber Equipment MSE* (reprinted w/basic incl C1-C4). 1 September 1991.

TM 11-5800-216-10-2. *System Manual for Mobile Subscriber Equipment MSE* (reprinted w/basic incl C1-C2). 1 September 1991.

TM 11-5800-216-10-3. *(C) System Manual for Mobile Subscriber Equipment Appendix K COMSEC Key Management (U) MSE.* 1 November 1994.

TM 11-5800-216-10-4. *System Manual for Mobile Subscriber Equipment MSE* (reprinted w/basic incl C1-C3). 1 November 1992.

TC 24-20. *Tactical Wire and Cable Techniques.* 3 October 1988.

STANAG 5040. *NATO Automatic and Semiautomatic Interfaces Between the National Switched Telecommunications Systems of the Combat Zone and Between These Systems and the NATO Integrated Communications System (NICS), Period 1975 to 1990s, Edition 3.* 23 October 1985.

STANAG 5042. *Military Telecommunications - Diagrams Symbols, Edition 2.* 9 November 1993.

SR-43A. *System Specification Requirement Document (GTE).* June 1990.

SR-45. *System Specification Requirement Document (GTE).* June 1990.

Index

A

AN/GRC-226, 5-29
AN/TCC-46, 1-4
AN/TCC-48, 1-5
AN/TRC-190(V), 1-8 - 1-10
AN/TRC-191, 1-6
AN/TTC-47, 1-3
AN/TYC-19, 7-4
AN/TYC-20, 7-3 - 7-4
AN/TYQ-46(V), 1-7
AN/UXC-7, 1-10
AN/VRC-97, 1-10
asynchronous transfer mode (ATM) switch, 8-1 - 8-8
  deployment, 8-3 - 8-4
  enhanced transmission group modem and orderwire (ETGMOW), 8-8
  functions, 8-2 - 8-3
  high-speed multiplexer (HSMUX), 8-8, D-1 - D-8
  operational procedures, 8-5 - 8-6
  operational software, 8-5
  tactics and techniques, 8-7 - 8-8
  technology, 8-1 - 8-2

C

class mark, 5-17 - 5-22
compressed dialing list (CDL), 5-21 - 5-22
communications security (COMSEC) operations, C-1 - C-8
contingency communications package (CCP), 6-1 - 6-8
  deployment, 6-3 - 6-5
  division signal battalion structure, 6-1 - 6-2
  doctrinal impacts, 6-1
  equipment capabilities, 6-3
corps area signal battalion, 3-6 - 3-9
corps signal brigade, 3-1 - 3-6
corps support signal battalion, 3-10 - 3-11
CV-4206/TTC, 7-4

D

database development, 5-1 - 5-3
defensive operations, 2-10 - 2-11
digitized map requirements, 5-3
deployment, 4-1 - 4-33, 6-1, 8-3
  operational, 4-1 - 4-33
  phased, 4-3 - 4-4
  phase I, 4-5 - 4-18
  phase II, 4-19 - 4-25
  phase III, 4-25 - 4-27
  phase IV, 4-27 - 4-33
division signal battalion, 3-11 - 3-15

E

enclave networks, 2-12 - 2-13
enhanced transmission group modem and orderwire (ETGMOW), 8-8

F

force entry switch (FES), 1-11
  features, 1-11
frequency management, 5-27 - 5-32
  requirements, 5-27 - 5-28
  parameters, 5-28 - 5-32

G

global standard profile matrix (GSPM), 5-7 - 5-16
grid networks, 2-12

H

high point data requirements, 5-3
high-speed multiplexer (HSMUX), 8-8, D-1 - D-8

I

integrated system control (ISYSCON), 1-6, 1-8
interoperability (MSE), B-1 - B-6
  data communications, B-6
  interface method 1, B-1 - B-3
  interface method 2, B-3 - B-4
  interface method 3, B-4 - B-5

installing the backbone, (phase II), 4-19 - 4-25
bulk transfer, 4-25
displacement orders and reports, 4-21
duplication and bypass, 4-20, 4-23, 4-24
internodal links, 4-19
installing extensions (phase III), 4-45 - 4-27
extension nodes, 4-26

K

KY-68, 1-10

L

large extension node (LEN), 1-3, 1-4
large extension node switch (LENS), 1-4, 4-12 - 4-16
equipment assignment diagram, 4-15
features, 1-4
NCMD cards, 4-13,
site layout diagram, 4-14
standard database, 4-12 - 4-15
light contingency communications package (LCCP), 6-1 - 6-8
deployment, 6-3, 6-5 - 6-8
division signal battalion structure, 6-1 - 6-2
doctrinal impacts, 6-1
equipment capabilities, 6-3
line of sight (LOS) radio system, 1-8 - 1-10
features, 1-9

M

mobile subscriber equipment (MSE), 1-1 - 1-11, 2-1 - 2-13,
architecture, 2-1 - 2-4,
area support concept, 2-11
background, 1-1
command relationships, 2-8 - 2-9
defensive operations, 2-10
deployment, 4-1 - 4-33
employment, 1-1, 3-15 - 3-20
characteristics, 3-15 - 3-20
equipment, 3-1 - 3-21, A-1 -A-9
how to fight with, 2-1 - 2-13
interoperability, B-1 - B-6
major components, 1-2 - 1-11
offensive operations, 2-9 - 2-10
organization, 3-1 - 3-21
overview, 1-1 - 1-11
range extension, 1-11
split-based operations, 2-12
support relationships, 2-9
symbology, A-1 - A-9
task organization, 2-6 - 2-7
technical impacts, 2-5 - 2-6
weighting the main attack, 2-7, 2-8
mobile subscriber radiotelephone (MRST),
1-10

N

network database management, 5-1 - 5-32
development, 5-1 - 5-3,
digitized map requirements, 5-3
high point data requirements, 5-3
management and control, 5-1
preaffiliation list (PAL) requirements, 5-4 - 5-6
preprogrammed conference list (PCL), 5-23 - 5-24
profile list requirements, 5-7 - 5-22
team label data file requirements, 5-24 - 5-27
frequency management requirements, 5-27 - 5-28
frequency management parameters, 5-27 - 5-32
node center (NC), 1-2 - 1-3
node center switch (NCS), 1-2, 1-3, 4-8 - 4-12,
equipment assignment diagram, 4-12
features, 1-2, 1-3
NCMD chips, 4-10
site layout diagram, 4-11
standard database, 4-8 - 4-12

O

offensive operations, 2-9 - 2-10
operational management (phase IV), 4-27 - 4-33
COMSEC messages, 4-30 - 4-31
five major areas, 4-30 - 4-33
message flow, 4-27 - 4-31
open link reports, 4-29
operations, 2-9 - 2-12
defensive, 2-10 - 2-11
offensive, 2-9 - 2-10
split-based, 2-12

P

packet switching network, 7-1
phased deployment, 4-3 - 4-4
preaffiliation list requirements, 5-4 - 5-6
predeployment (phase I), 4-5 - 4-18
COMSEC, 4-16
database modifications, 4-18
interfaces, 4-5 - 4-7
MSRT plan, 4-8
OPORD, 4-17
network operations, 4-18
priority listing, 4-6
RAU plan, 4-8
site reconnaissance, 4-17
team packets, 4-16
user requirements, 4-5
preprogrammed conference list requirements, 5-23 - 5-24
profile list requirements, 5-7 - 5-22

R

radio access unit (RAU), 1-5 - 1-6

S

signal data converter, 7-4
small extension node (SEN), 1-4
small extension node switch (SENS), 1-5
split-based operations, 2-12
subscriber terminals, 1-10
symbology, A-1 - A-9
system control, 3-20
system control center (SCC-2), 1-7, 1-8

T

TA-1035-U, 1-10
tactical packet network, 7-1 - 7-9
AN/TYC-19 gateway switch, 7-4
AN/TYC-20 packet switch, 7-3 - 7-4
architecture, 7-2
CV-4206/TTC signal data converter, 7-4
host registration, 7-7 - 7-8
hosts, 7-4
internet protocol address, 7-6 - 7-7
message transfer agent (MTA), 7-4 - 7-5
network management, 7-8 -7-9
overview, 7-1
physical interfaces, 7-5
tactical name server (TNS), 7-4 - 7-5
X.25 interfaces, 7-5
team label data file requirements, 5-24 - 5-27
traffic load control (TLC), 5-19

FM 11-55
22 JUNE 1999

By Order of the Secretary of the Army:

ERIC K. SHINSEKI
General, United States Army
Chief of Staff

Official:

JOEL B. HUDSON
Administrative Assistant to the
Secretary of the Army
9911308

DISTRIBUTION:

Active Army, Army National Guard, and U. S. Army Reserve: To be distributed in accordance with the initial distribution number 115275, requirements for FM 11-55.