AIRDROP OF SUPPLIES AND EQUIPMENT:

# RIGGING THE 600-GPH REVERSE OSMOSIS WATER PURIFICATION UNIT

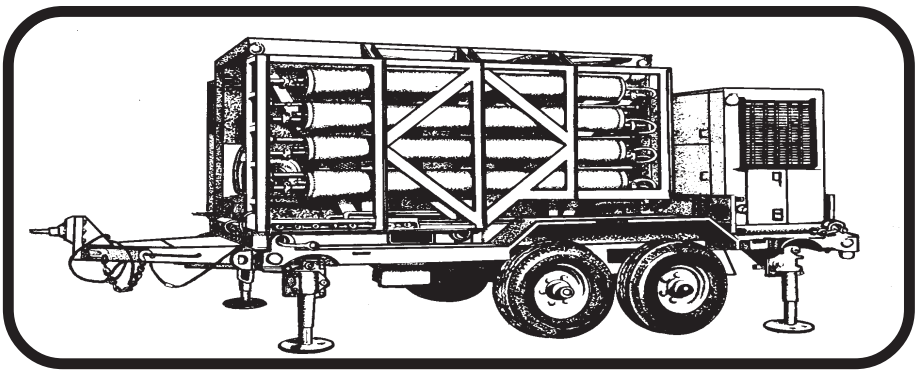

**DISTRIBUTION RESTRICTION: Approved for public release; distribution is unlimited.**

HEADQUARTERS
DEPARTMENT OF THE ARMY
DEPARTMENT OF THE AIR FORCE

**DEPARTMENT OF THE ARMY**
HEADQUARTERS UNITED STATES ARMY TRAINING AND DOCTRINE COMMAND
FORT MONROE, VIRGINIA 23651-5000

REPLY TO ATTENTION OF

ATCD-SL (70-1f) 21 Oct 96

MEMORANDUM FOR DEPUTY CHIEF OF STAFF OPERATIONS AND PLANS, 400 ARMY PENTAGON, ATTN: DAMO-FDL, WASHINGTON DC 20310-0400

SUBJECT: Quartermaster (QM) Functional Area Assessment (FAA) Response

1. References:

a. Message, HQDA, DAMO-FDL, 231825Z Apr 96, subject: QM FAA Results.

b. Memorandum, HQ TRADOC, ATCG, 29 Jul 96, Army Airdrop Capabilities Assessment.

2. At the 29 Mar 96 QM FAA briefing to the Director of Army Staff, the decision was reached to revisit the Army's decision to "shelf" Low Altitude Parachute Extraction System (LAPES) (reference 1a).

a. Reference 1b, solicited CINCs input for their positions on LAPES and assessments of airdrop capabilities. The CINCs responses will be used to chart the direction and role for airdrop in the 21st century.

b. Based on the responses received (enclosure), there is no strong support for LAPES airdrop capability at this time. The consensus for the airdrop capabilities is to continue support for current Low Velocity Airdrop System (LVAD), develop a 500-foot LVAD and further explore Advanced Precision Aerial Delivery System (APADS).

3. Further, we will continue to maintain a range of airdrop capabilities to support all contingencies throughout the Army. The results of the Army Airdrop Capabilities Assessment also will be incorporated into the Operational Concept for Aerial Delivery Operations and Improved Cargo Aerial Delivery Capability Mission Needs Statement being developed by the Quartermaster Directorate of Combat Developments, U.S. Army Combined Arms Support Command (CASCOM).

4. The HQ TRADOC POC is MAJ Higgins, Airborne Airlift Action Office, ATCD-SL, E-mail: higginsn@emh10.monroe.army.mil, DSN 680-2469/3921, datafax DSN 680-2520.

ATCD-SL

SUBJECT: Quartermaster (QM) Functional Area Assessment (FAA) Response

FOR THE DEPUTY CHIEF OF STAFF FOR COMBAT DEVELOPMENTS:

Encl

JOHN A. MANDEVILLE
Colonel, GS
Director, Combat Service Support

CF:
USACASCOM (ATCL-CG/ATCL-QC/ATCL-MES)
USAQMC&S (ATSM-CG/ATSM-ABN/FS)
USANRDEC (SSCNC-UT/AMSSC-PM)



10/21/1996 13:55 8047343174 QM GENERALS OFFICE PAGE 03

| ORGANIZATION | LAPES | LVAD | 500' LVAD | APADS | SPTS/ NOT SPEC |
|---|---|---|---|---|---|
| USSOCOM | | X | X | X | |
| EUCOM | | | | | X |
| CENTCOM | | X | X | | |
| FORSCOM | | X | X | X | |
| TRANSCOM | | | | | X |
| SOUTHCOM | X | | | X | |
| VIII ARMY | | | | | X |
| ACOM | | | | | X |

**USSOCOM**: Memorandum specifically states that the command does not support LAPES airdrop capability, but supports LVAD as well as APADS.

**EUCOM**: Draft memorandum specifically states that the command support the need for a low level airdrop capability. However, memorandum summarizes that the specific capability is not important as to have a capability to meet the required mission/threat profile.

**CENTCOM**: Memorandum specifically states that the command does not support LAPES airdrop capability, but support both current LVAD and 500-foot LVAD airdrop capabilities.

**FORSCOM**: 1st Endorsement specifically states that the command does not support LAPES airdrop capability, however supports LVAD, 500-foot LVAD and APADS.

**TRANSCOM**: Memorandum does not specifically address any airdrop capability as it talks to the 21st century requiring the full spectrum of tactical delivery methods.

**SOUTHCOM**: Memorandum specifically supports LAPES and APADS airdrop capabilities for their command.

**VIII ARMY**: E-Mail note for VIII Army states that the command has no input to the assessment as their plans call for a limited employment of airdrop.

**ACOM**: Sent request for input on 30 Sep 96. Received verbal response on 16 Oct 96 stating command is indifferent on the specific capability received.

DEPARTMENT OF THE ARMY
HEADQUARTERS UNITED STATES ARMY TRAINING AND DOCTRINE COMMAND
FORT MONROE, VIRGINIA 23651-5000

REPLY TO
ATTENTION OF

6 SEP 1995

ATCD-SL (70-1f)

MEMORANDUM FOR

Major General Thomas W. Robison, Commander, U.S. Army Combined Arms Support Command and Fort Lee, Fort Lee, VA 23801-6000
Major General Robert K. Guest, Commander, U.S. Army Quartermaster Center and School, Fort Lee, VA 23801-5030

SUBJECT: Low Altitude Parachute Extraction System (LAPES) Disassembly

1. References:

a. Message, HQ TRADOC, ATCD-SL, 100930Z Jan 95, subject: LAPES.

b. OVVM Note, HQ USACASCOM, 30 March 95, subject: TRADOC Disassembly of LAPES.

2. The U.S. Army and other services recently have concurred that LAPES will be terminated, as this capability is no longer required as a viable wartime contingency airdrop option. However, Headquarters, Department of the Army (DA), Deputy Chief of Staff for Operations and Plans, has agreed that LAPES technology will be shelved, and all specialized equipment preserved for possible future use.

3. Take the necessary steps to terminate training and leader development concerning LAPES operations. Major General Guest's questions regarding the disassembly of LAPES (enclosed) with following guidance will be utilized:

a. "Does the U.S. Army Quartermaster Center and School (USAQMC&S) continue to publish LAPES procedures in their joint field manual(FMs)/technical order manuals?" "Do we publish the LAPES procedures that have been written but not been printed yet?" Publishing LAPES procedures in all joint publications, Army FMs, regulations, etc., will be discontinued and addressed in the next revision of the aforementioned documents. Concurrently, all LAPES procedures that have been written and not printed will not be published.

6 SEP 1995

ATCD-SL
SUBJECT: Low Altitude Parachute Extraction System (LAPES) Disassembly

b. "Do we keep LAPES in our programs of instruction (POIs)?" "Do we teach LAPES to other services and our allies?" The USAQMC&S will remove LAPES procedures from POI and cease teaching LAPES to other services and/or allies.

c. "What do we teach to folks that have LAPES equipment in their war reserves?" All instruction concerning LAPES procedures will be discontinued whether LAPES equipment is located in units or in war reserves.

d. "What is the DA/TRADOC guidance on disposition of unit, depot, and war reserves LAPES equipment?" All LAPES equipment in war reserves and depot should be preserved with the exception of a few items that can be utilized in other existing airdrop capabilities. Specifically, the Type V airdrop platforms and attitude control bars of the LAPES system are being utilized to augment current Low Velocity Airdrop Systems (LVADS) loads.

e. "What is the guidance to U.S. Army Test and Experimentation Command on force development test and experimentation certification of LAPES loads?" The certification of all LAPES loads at the Airborne Special Operations Test Directorate will be redirected toward testing and certification of LVADS loads.

4. HQ TRADOC POC is CPT Higgins or CPT Phillips, ATCD-SL, DSN 680-2469/3921, datafax DSN 680-2520.

FOR THE COMMANDER:

Encl

JOE N. BALLARD
Major General, GS
Chief of Staff

CF:
HQDA (DAMO-FDL)
CDR, NRDEC (SAFNC-UA)
CDR, FORSCOM (FCJ3-FC)
CDR, OPTEC (CSTE-CS, CSTE-OPM)
CDR, ATCOM (AMSAT-W-TD)
DIR, ABNSOTD (ATCT-AB)
HQ TRADOC (ATCD-L, ATCD-RM, ATDO-A, ATTG-IT)



SEP 11 '95 08:30AM CSSRD FT MONROE VA P.3/7

Date and time 07/18/95 10:28:11

-om: HIGGINSN--MON1
o: HIGGINSN--MON1

-om: CPT NEIL HIGGINS, (AAACO), 680-2469
ubject: TRADOC "DISASSEMBLY" OF LAPES

```
                    ********************************
                    * AIRBORNE AIRLIFT ACTION OFFICE *
                    *              (AAACO)           *
                    ********************************
** Forwarding note from BRUNEAUN--CMSNAMES 07/18/95 10:27 ***
eceived: from LEE-EMH2.ARMY.MIL by MONROE-EMH1.ARMY.MIL (IBM VM SMTP V2R2)
  with TCP; Tue, 18 Jul 95 10:27:22 EDT
eceived: from LEE1 by LEE-EMH2.ARMY.MIL (IBM VM SMTP V2R2) with BSMTP id 3547;
  Tue, 18 Jul 95 10:29:34 EDT
omments:      Converted from PROFS to RFC822 format by PUMP V2.2X
ate:          Tue, 18 Jul 95  10:29:26 EDT
rom:          NORMAN BRUNEAU          <BRUNEAUN@LEE-EMH2.ARMY.MIL>
ubject:       TRADOC "DISASSEMBLY" OF LAPES
o:            "NEIL HIGGINS- AAACO " <HIGGINSN@MONROE-EMH1.ARMY.MIL>

*** Resending note of 03/30/95 09:23

-To: LARRY MC MILLIAN AAA <MCMILLIL@MONROE-EMH1.ARMY.MIL>
rom: NORMAN BRUNEAU
ubject: TRADOC "DISASSEMBLY" OF LAPES

EIL- HERE ARE THE QUESTIONS THAT MG GUEST WANTS DA/ TRADOC TO ANSWER RE LAPES,
S I UNDERSTAND HIS GUIDANCE.  I HAVE DISCUSSED THESE W/ OUR ABN DPT.  IF THESE
UESTIONS MAKE SENSE, GIVE ME AN "UP" BEFORE I FORMALLY SEND ANYTHING OUT.
G GUEST WANTS SPECIFIC GUIDANCE FM TRADOC ON LAPES, RESPONSE NEEDS TO BE CLEAR
ND TO THE POINT.  A LOT OF THIS WILL HINGE ON WHAT ACC PLANS TO DO W/ LAPES
OW THAT THE AIR STAFF HAS GIVEN THEM THE GREEN LIGHT TO KILL IT.  IF THEY
LAN TO PLACE IT ON THE SHELF OR KEEP A LIMITED OR CONTINGENCY CAPABILITY, THAT
ILL DRIVE YOUR ANSWER TO US, AT THIS POINT I THINK ACC WILL DO WHATEVER THE
RMY WANTS, AS THEIR PRIMARY CUSTOMER.  I WILL NOT REHASH HOW THE ARMY DE-
IDED THEY DIDNT NEED LAPES.  QUESTIONS FOLLOW:

OES THE GMCS CONTINUE TO PUBLISH LAPES PROCEDURES IN THEIRJOINT FM/TO MAN-
UALS?
O WE PUBLISH THE LAPES PROCEDURES THAT HAVE BEEN WRITTEN BUT HAVE NOT BEEN
RINTED YET?
O WE REMOVE ALL LAPES PROCEDURES FROM ALREADY PUBLISHED MANUALS?
O WE KEEP LAPES IN OUR POI?
O WE TEACH LAPES TO OTHER SERVICES AND OUR ALLIES?
HAT DO WE TEACH TO FOLKS THAT HAVE LAPES EQUIPMENT IN THEIR WAR RESERVES?
HAT IS THE DA/TRADOC GUIDANCE ON DISPOSITION OF UNIT, DEPOT, AND WAR RE-
ERVE LAPES EQUIPMENT?
HAT IS THE GUIDANCE TO TEXCOM ON THE FDTE CERTIFICATION OF LAPES LOADS?

 KNOW THESE ARE TOUGH QUESTIONS, BUT THEY HAVE TO BE ASKED. HQ STAFFS CAN-
OT SIMPLY SAY "KILL IT" AND MOVE ON TO THE NEXT ISSUE.  I DONT THINK WE ARE
OING OUR JOB IF WE LEAVE IT UP TO THE SCHOOLHOUSE TO INTERPRET SKETCHY GUID-
NCE.  THAT PLACES US IN THE POSSIBLE POSITION OF BEING ACCUSED OF NOT FOLLOW-
NG ORDERS.

ETS TALK.....NORM
```

SEP 11 '95 08:30AM CSSRD FT MONROE VA

Encl 1

TAB A

**DEPARTMENT OF THE ARMY**
QUARTERMASTER CENTER AND SCHOOL
1201 22D STREET
FORT LEE, VIRGINIA 23801-1601

ATSM-ABN-FS 15 Dec 96

MEMORANDUM FOR RECORD

SUBJECT: Airdrop Equipment Update

Reference:

a. Phone conversation between CW4 Mahon, CASCOM and Dick Harper, Weapons System Management Office, Army Aviation Troop Command, Subject : sab

b. Phone conversation between CW4 Mahon, CASCOM and Don Stump, Logistics Management Specialist, Office, Deputy Chief of Staff for Logistics, Subject, sab

c. Phone conversation between CW4 Mahon, CASCOM and Chief Msgt Okraneck, Hqrs Air Combat Command, Subject sab

d. msg dtg R 181348Z Feb 94, subject: FCIF item: Type II platforms, PEFTC and SL/CS for Air Force unilateral training

1. Based on information received from the references a-c above, the following update is provided per request ref c, above.

a. The type II modular platform no longer exists within any contingency stocks. Therefore, maintaining Joint Inspection training program is no longer required for this equipment.

b. The Parachute Extraction Transfer Force Coupling (PEFTC) no longer exists within any contingency stocks. Therefore, maintaining Joint Inspection training program is no longer required for this equipment.

c. The metric platform interim rigging procedures are no longer valid as they apply to metric platforms. Those rigging procedures which have dual application with the type V platform are still valid for the type V platform.

d. The static line connector strap (SL/CS) currently has limited application. Only those loads that specifically require this system are authorized use of this system. The SL/CS is not an across the board substitute for the Extraction Force Transfer Coupling (EFTC). These authorized loads are specific in nature and will normally be found in the special operations arena of airdrop loads. This system is not authorized for use IAW ref d, above.

2. For additional questions/information contact the undersigned at DSN 687-4733, Fax 3084.

John R. Mahon
CW4, USA
Senior Airdrop Systems
Technician

**CHANGE**
**No 1**

**HEADQUARTERS**
**DEPARTMENT OF THE ARMY**
**DEPARTMENT OF THE AIR FORCE**
**Washington, DC, 30 January 1998**

# AIRDROP OF SUPPLIES AND EQUIPMENT RIGGING THE 600-GPH REVERSE OSMOSIS WATER PURIFICATION UNIT

This change adds the procedures for rigging the 600-GPH ROWPU on a type V platform.

FM 10-558/TO 13C7-7-61, 4 May1987, is changed as follows:

1. New or changed material is identified by a vertical bar in the margin opposite the changed material.

2. File this transmittal sheet in front of the publication for reference purposes.

3. Remove old pages and insert new pages as indicated below:

| **Remove old pages** | **Insert new pages** |
|---|---|
| Cover page | Cover page |
| i and ii | i through iii |
| | 3-1 through 3-46 |
| Reference | Reference-1 |

**DISTRIBUTION RESTRICTION.** Approved for public release; distribution is unlimited.

By Order of the Secretaries of the Army and the Air Force:

DENNIS J. REIMER
*General, United States Army*
*Chief of Staff*

Official:

JOEL B. HUDSON
*Administrative Assistant to the*
*Secretary of the Army*
04303

DISTRIBUTION:

Active Army, Army National Guard, and U.S. Army Reserve: To be distributed in accordance with the initial distribution number 113881, requirements for FM 10-558.

FIELD MANUAL
NO 10-558
TECHNICAL ORDER
NO 13C7-7-61

HEADQUARTERS
DEPARTMENT OF THE ARMY
DEPARTMENT OF THE AIR FORCE
WASHINGTON, DC

# AIRDROP OF SUPPLIES AND EQUIPMENT RIGGING THE 600-GPH REVERSE OSMOSIS WATER PURIFICATION UNIT

Table of Contents


| | | *Paragraph* | *Page* |
|---|---|---|---|
| PREFACE | | | iii |
| CHAPTER 1 | INTRODUCTION | | |
| | Description of Items | 1-1 | 1-1 |
| | Special Considerations | 1-2 | 1-1 |
| CHAPTER 2 | RIGGING 600-GPH ROWPU FOR LOW-VELOCITY AIRDROP | | |
| | [redacted] | 2-1 | 2-1 |
| | | 2-2 | 2-1 |
| | | 2-3 | 2-1 |
| | | 2-4 | 2-11 |
| | | 2-5 | 2-32 |
| | | 2-6 | 2-35 |
| | | 2-7 | 2-38 |
| | | 2-8 | 2-40 |
| | | 2-9 | 2-42 |
| | | 2-10 | 2-46 |
| | | 2-11 | 2-48 |
| | | 2-12 | 2-48 |
| | | 2-13 | 2-48 |
| | | 2-14 | 2-49 |
| | | 2-15 | 2-49 |
| CHAPTER 3 | RIGGING 600-GPH ROWPU FOR LOW-VELOCITY AIRDROP ON A TYPE V PLATFORM | | |
| | Description of Load | 3-1 | 3-1 |
| | Preparing Platform | 3-2 | 3-1 |
| | Preparing and Positioning Honeycomb Stacks | 3-3 | 3-2 |
| | Preparing ROWPU | 3-4 | 3-9 |
| | Lifting and Positioning Load | 3-5 | 3-26 |
| | Lashing the ROWPU | 3-6 | 3-29 |
| | Constructing End Boards and Stowing and Lashing Tires | 3-7 | 3-32 |


**TYPE II PROCEDURES REMOVED**

| | | *Paragraph* | *Page* |
|---|---|---|---|
| . | Constructing and Installing Parachute Stowage Platform | 3-8 | 3-34 |
| | Installing Load Cover, Deadman's Tie and Suspension Slings | 3-9 | 3-37 |
| | Stowing Cargo Parachutes | 3-10 | 3-38 |
| | Installing M-2 Parachute Release Assembly | 3-11 | 3-39 |
| | Installing Extraction System | 3-12 | 3-40 |
| | Installing Provisions for Emergency Restraints | 3-13 | 3-42 |
| | Placing ExtractionParachutes | 3-14 | 3-42 |
| | Marking Rigged Load | 3-15 | 3-43 |
| | Equipment Required | 3-16 | 3-43 |

GLOSSARY ..... GLOSSARY-1

REFERENCES ..... REFERENCES-1

# PREFACE

## SCOPE

This manual tells and shows how to prepare and rig a 600-GPH ROWPU on a 20-foot, type V platform for low-velocity airdrop. It is designed for use by all parachute riggers.

## USER INFORMATION

The proponent of this publication is HQ TRADOC. You are encouraged to report any errors or omissions and to suggest ways for making this a better manual. Army personnel, send your comments on DA Form 2028 directly to:

Director
Aerial Delivery and Field Services Department
USA Quartermaster Center and School
1010 Shop Road
Fort Lee, Virginia 23801-1502

Air Force personnel, send your reports on AFTO Form 22 through:

Headquarters
Air Mobility Command (AMC/DOKT)
402 Scott Drive, Unit 3AI
Scott AFB, Illinois 62225-5302

Air Force personnel in Special Operations Command, send your reports on AFTO 22 through:

HQ AFSOC/DOXT
100 Bartley St., Suite 260
Hurlburt Field, Florida 32544-5273

to:

Director
Aerial Delivery and Field Services Department
USA Quartermaster Center and School
1010 Shop Road
Fort Lee, Virginia 23801-1502

Also send information copy of AFTO Form 22 to:

SA-ALC/TILDP
450 Quentin Roosevelt Road
Kelly AFB, Texas 78241-6421

Unless this publication states otherwise, masculine nouns and pronouns do not refer exclusively to men.

# CHAPTER 3

# RIGGING 600-GPH ROWPU FOR LOW-VELOCITY AIRDROP ON A TYPE V PLATFORM

## 3-1. Description of Load

The 600-GPH ROWPU is rigged for low-velocity airdrop on a 20-foot, type V platform. The ROWPU has a rigged weight of 21,780 pounds. It is 101 inches in height and uses five G-11 cargo parachutes.

## 3-2. Preparing Platform

Inspect, or assemble and inspect, a 20-foot, type V airdrop platform as outlined in TM 10-1670-268-20&P/TO 13C7-52-22. Prepare a 20-foot, type V airdrop platform using 46 tiedown clevises as shown in Figure 3-1.

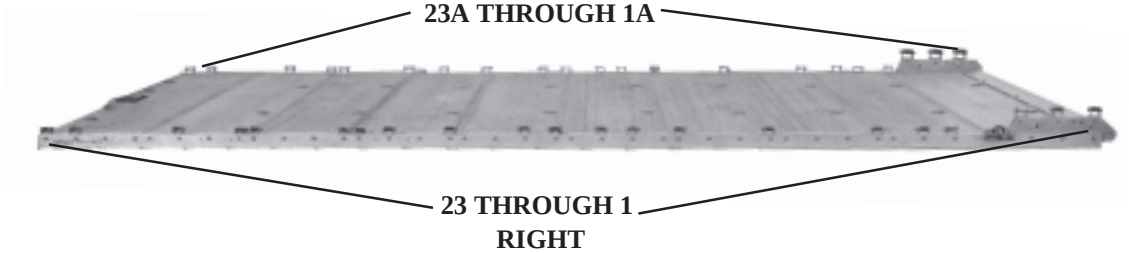


Steps:

1. Install a tandem link to the front of each platform side rails using holes 1, 2, and 3.

2. Install a clevis on bushing bolts on each side rail using holes 4 (doubled), 6, 7, 9, 13, 16, 19, 21, 22, 25, 27, 28, 29, 32, 33, 35, 39, and 40.

3. Install a clevis on bushings 1, 3, and 4 of each tandem link.

4. Starting at the front of the platform, number the clevises 1 through 23 on the right side and 1A through 23A on the left side.

5. Label the tiedown rings according to FM 10-500-2/TO 13C7-1-5.

**Notes: 1. The nose bumper may or may not be installed.**
**2. Measurements given in this section are from the front edge of the platform NOT from the front edge of the nose bumper.**

*Figure 3-1. Platform prepared*

## 3-3. Preparing and Positioning Honeycomb Stacks

Build five honeycomb stacks according to FM 10-500-2/ TO 13C7-1-5 and as shown in Figures 3-2 through 3-7. Position the honeycomb stacks on the platform as shown in Figure 3-8.

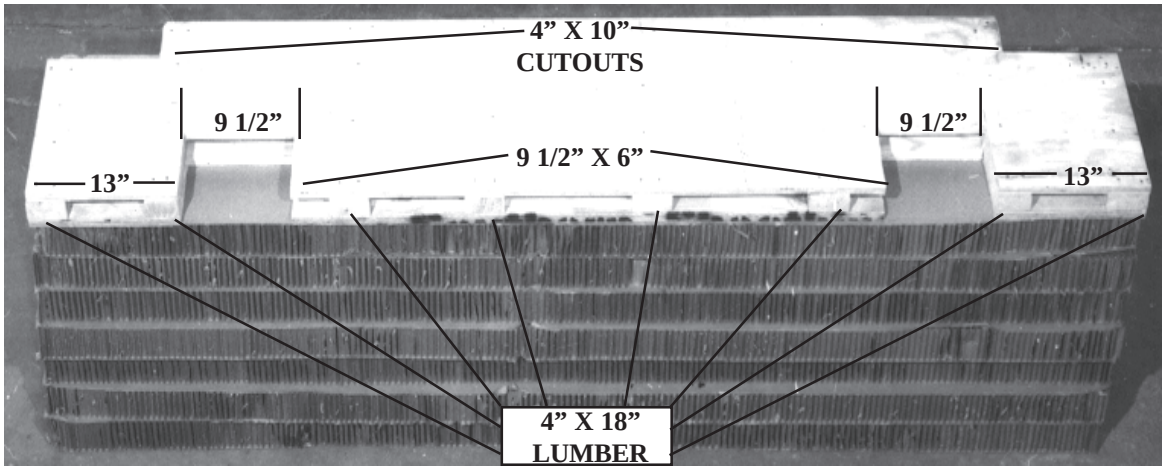


| Stack Number | Pieces | Width (Inches) | Length (Inches) | Material | Instructions |
|---|---|---|---|---|---|
| 1 | 7 | 18 | 96 | Honeycomb | Use honeycomb as the base layers. |
| | 2 | 18 | 96 | Plywood | Place 3/4-inch plywood on top of honeycomb base. Cut a 4- by 10-inch cutout in the rear corners of both pieces of plywood. Cut a 9 1/2- by 6-inch cutout 13 inches from each end on the front sides of both pieces of plywood (clearance for trailer lights). |
| | 2 | 4 | 14 | Lumber | Nail lumber to each 18-inch edge of plywood (between the sheets of plywood). |
| | 6 | 4 | 18 | Lumber | Space lumber evenly between and along the two sheets of plywood, nail it to the plywood. |

*Figure 3-2. Stack 1 prepared*

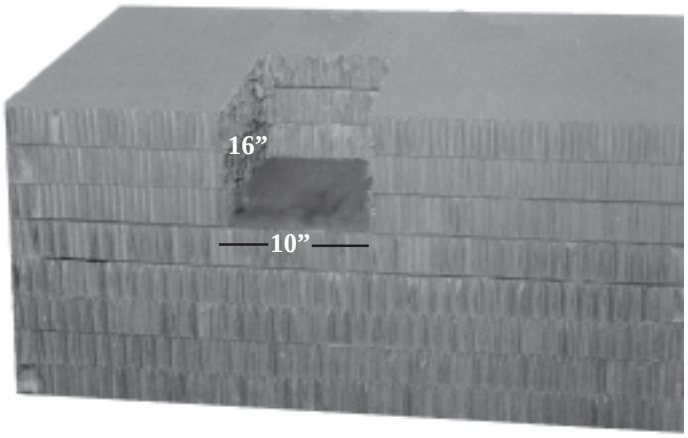


| Stack Number | Pieces | Width (Inches) | Length (Inches) | Material | Instructions |
|---|---|---|---|---|---|
| 2 | 8 | 34 | 48 | Honeycomb | Use honeycomb as base layers. Cut a 10- by 16-inch cutout on the rear edges of the top three layers, starting at 16 inches from the left side. |

*Figure 3-3. Stack 2 prepared*

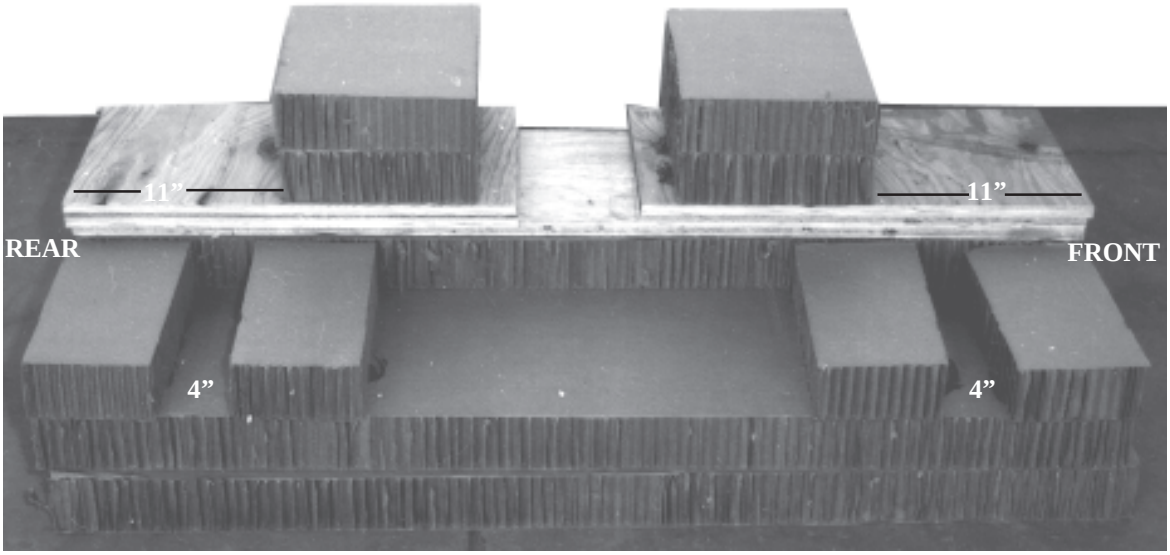


| Stack Number | Pieces | Width (Inches) | Length (Inches) | Material | Instructions |
|---|---|---|---|---|---|
| 3 | 2 | 24 | 52 | Honeycomb | Use honeycomb as the base layers on the right side of the platform. |
| | 1 | 12 | 52 | Honeycomb | Place piece on top of the base on the inside edge. |
| | 1 | 12 | 52 | Plywood | Place 3/4-inch plywood on top of 12- by 52-inch honeycomb. |
| | 4 | 12 | 23 | Plywood | Place two pieces of 3/4-inch plywood flush with the front edge and two flush with the rear edge of the 12- by 52-inch piece of plywood. |
| | 4 | 10 | 12 | Honeycomb | Place two pieces 11 inches from the front edge and two pieces 11 inches from the rear edge of the plywood. |
| | 4 | 6 | 12 | Honeycomb | Place pieces on top of base layers. Place one piece on the rear outside corner, one 4 inches from the rear piece, one on the front outside corner, and one 4 inches from the front piece. |

*Figure 3-4. Stack 3 prepared*

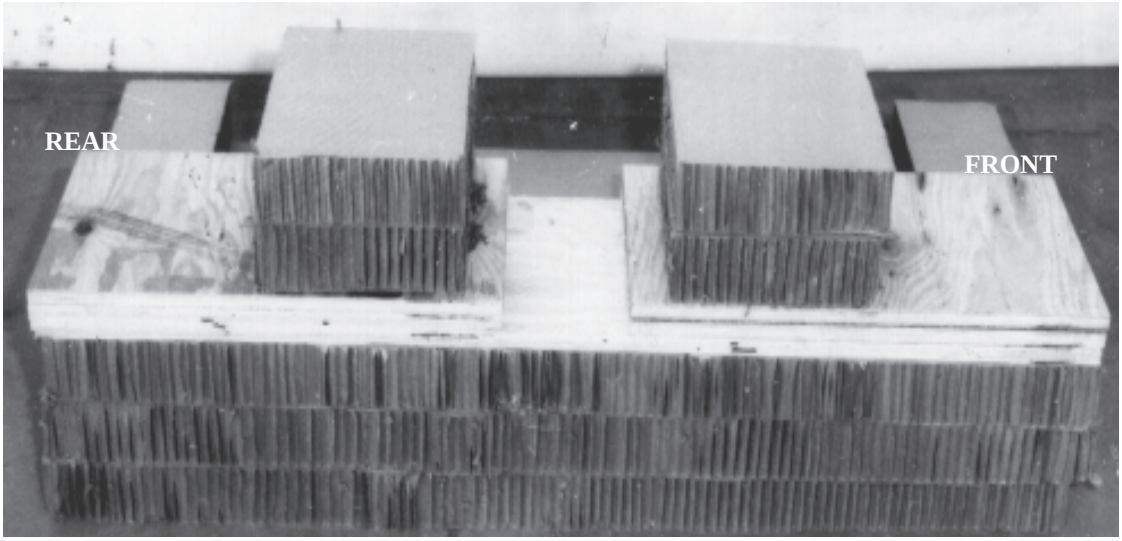


| Stack Number | Pieces | Width (Inches) | Length (Inches) | Material | Instructions |
|---|---|---|---|---|---|
| 4 | Same as stack 3 but placed on the left side of the platform | | | | |

*Figure 3-5. Stack 4 prepared*

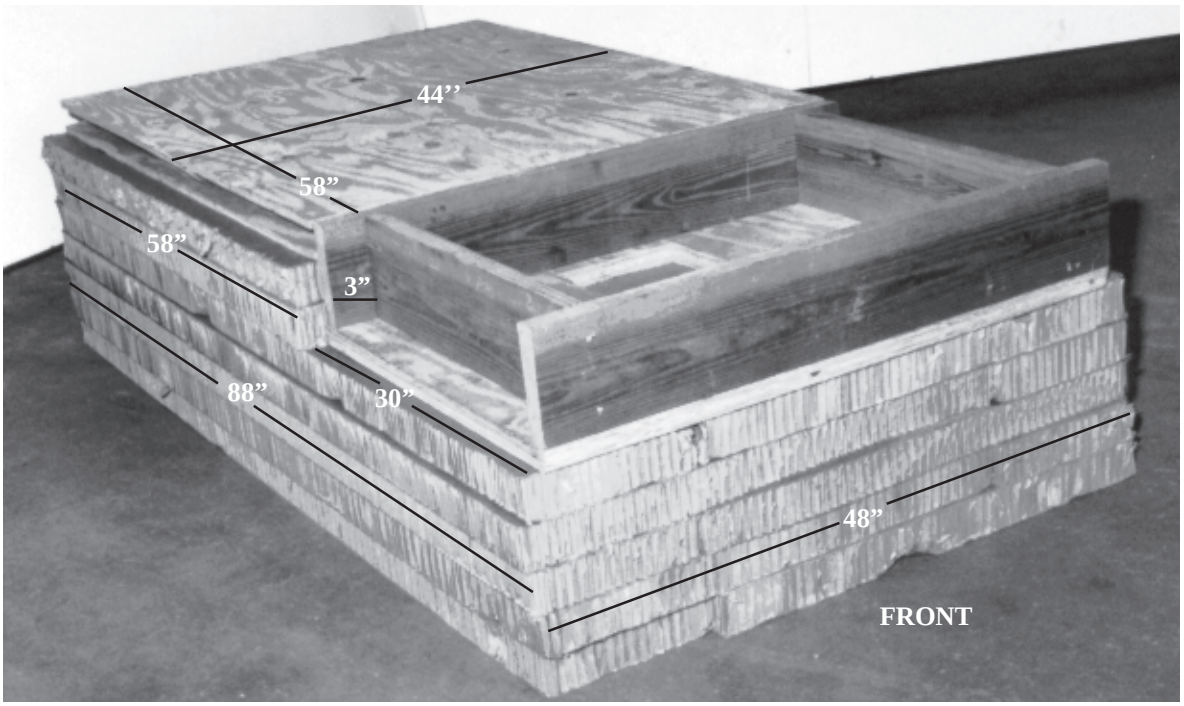


| Stack Number | Pieces | Width (Inches) | Length (Inches) | Material | Instructions |
|---|---|---|---|---|---|
| 5 | 5 | 48 | 88 | Honeycomb | Use honeycomb as the base layers. |
| | 2 | 48 | 58 | Honeycomb | Place pieces on top at rear edge of base layers. |
| | 1 | 44 | 58 | Plywood | Place 3/4-inch plywood on top of 48- by 58-inch honeycomb. |
| | 4 | 2 | 58 | Lumber | Place one piece of 2-inch lumber 2 inches from the right edge and one piece 2 inches from the left edge of plywood. Place the other two pieces of lumber 8 inches from the pieces on the edge. |
| | 1 | 48 | 58 | Plywood | Place 3/4-inch plywood on top of lumber. Nail the plywood and lumber together. |

*Figure 3-6. Stack 5 prepared*

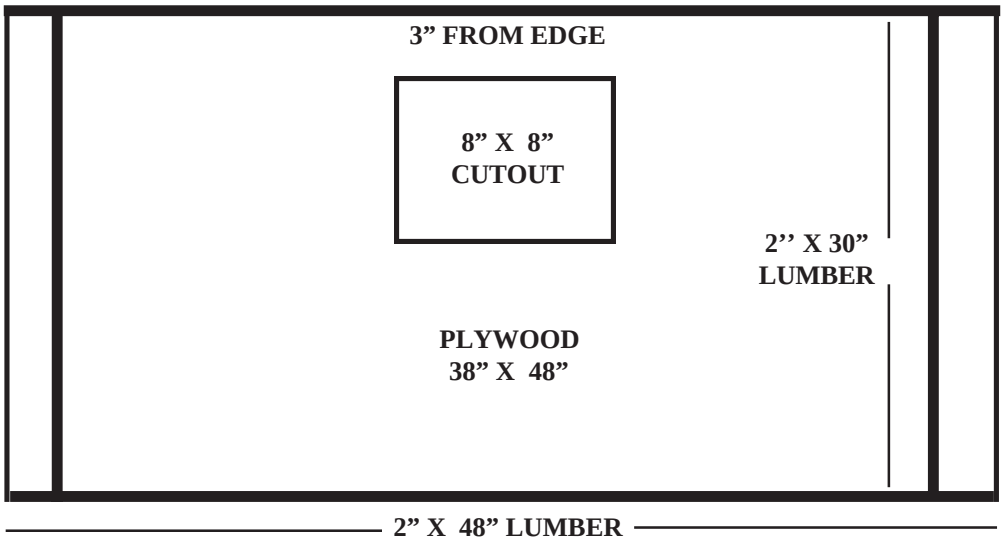


| Stack Number | Pieces | Width (Inches) | Length (Inches) | Material | Instructions |
|---|---|---|---|---|---|
| 5 | 2 | 30 | 48 | Plywood | Use two pieces of 3/4-inch plywood as the base for the box. Cut a 8- by 8-inch cutout in both pieces of plywood 3 inches from the 48-inch rear edge and centered between the 30-inch edges. |
| | 2 | 8 | 48 | Lumber | Nail a piece of 2-inch lumber on each 48-inch edge of the plywood. |
| | 2 | 8 | 26 | Lumber | Nail a piece of 2-inch lumber 3 inches from each 30-inch edge of the plywood. Place the completed box on top of the the 48- by 88-inch honeycomb at the front of stack 5. |

*Figure 3-7. Box for stack 5 prepared*

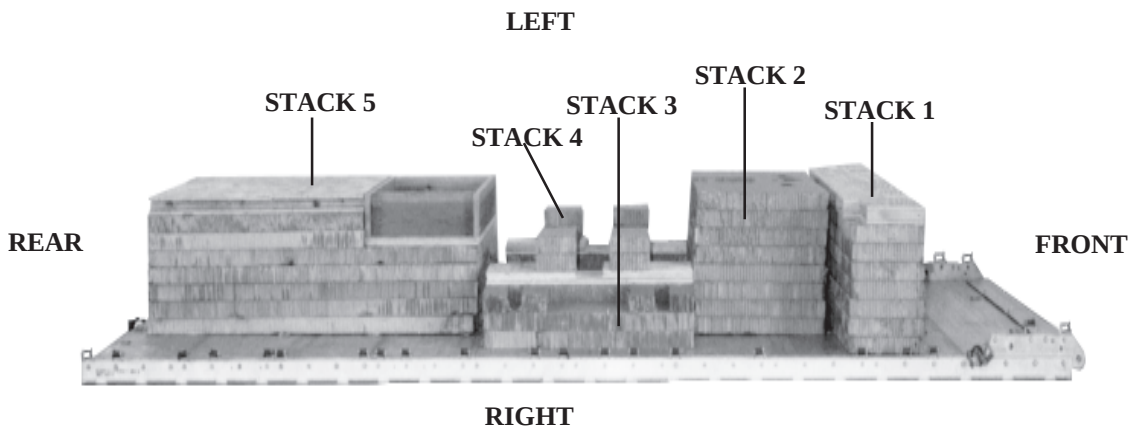


| Stack Number | Position on Platform |
|---|---|
| | Place stack: |
| 1 | Centered and 35 inches from the front edge of the platform. |
| 2 | Centered and flush against stack 1. |
| 3 | Flush against stack 2 and 22 inches from the right side rail. |
| 4 | Flush against stack 2 and 22 inches from the left side rail. |
| 5 | Centered and 4 inches from the rear of stacks 3 and 4. |

*Figure 3-8. Honeycomb stacks positioned on platform*

**3-4. Preparing ROWPU**

Prepare the ROWPU as described below. Secure all lashings with a load binder and the appropriate number of D-rings, and safety them according to FM 10-500-2/TO 13C7-1-5.

**a.** Pad the top corners of the ROWPU frame and the top corners of the generator using cellulose wadding and tape.

**b.** Pad the trailer lights.

**c.** Prepare and lash the control box assembly as shown in Figure 3-9, and secure the lashings as shown in Figure 3-10.

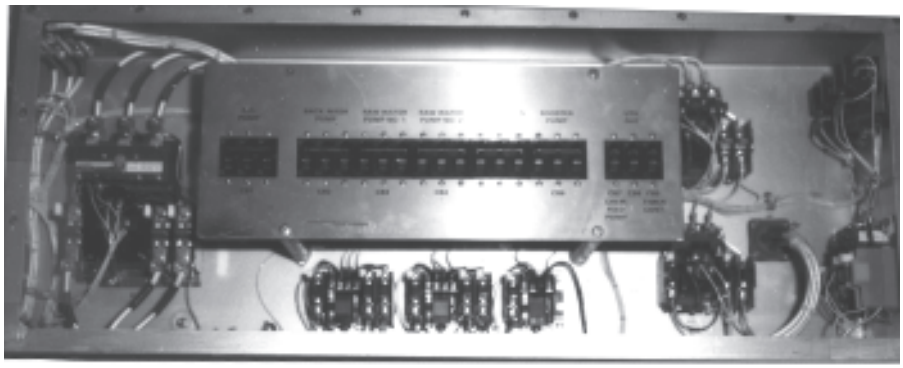

1

1 Open the control box assembly cover.

*Figure 3-9. Control box assembly prepared*

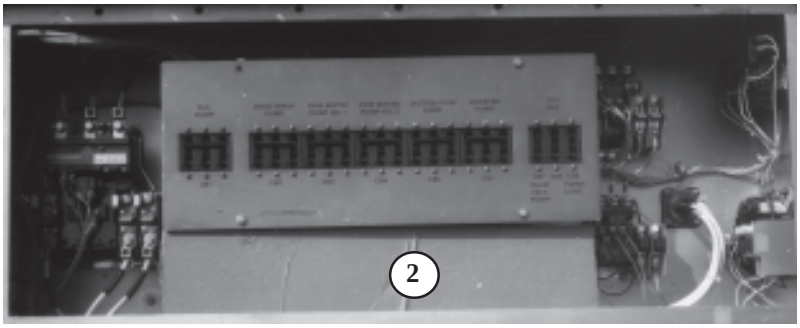


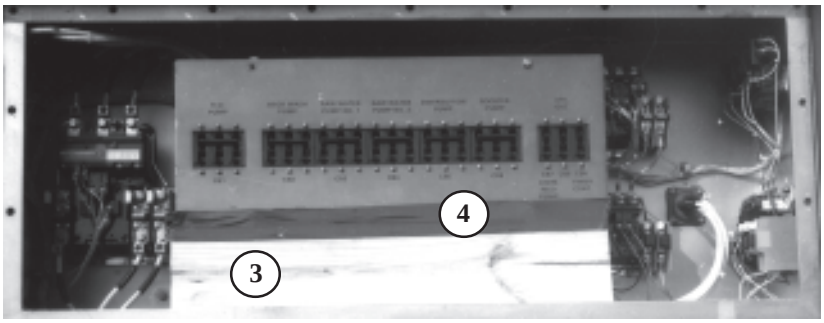


(2) Position a 6- by 26-inch piece of honeycomb between the bottom of the circuit breaker plate and the bottom of the control box.

(3) Place a 2- by 6- by 26-inch piece of lumber between the honeycomb and the edge of the control panel.

(4) Tape the lumber in place.

*Figure 3-9. Control box assembly prepared (continued)*

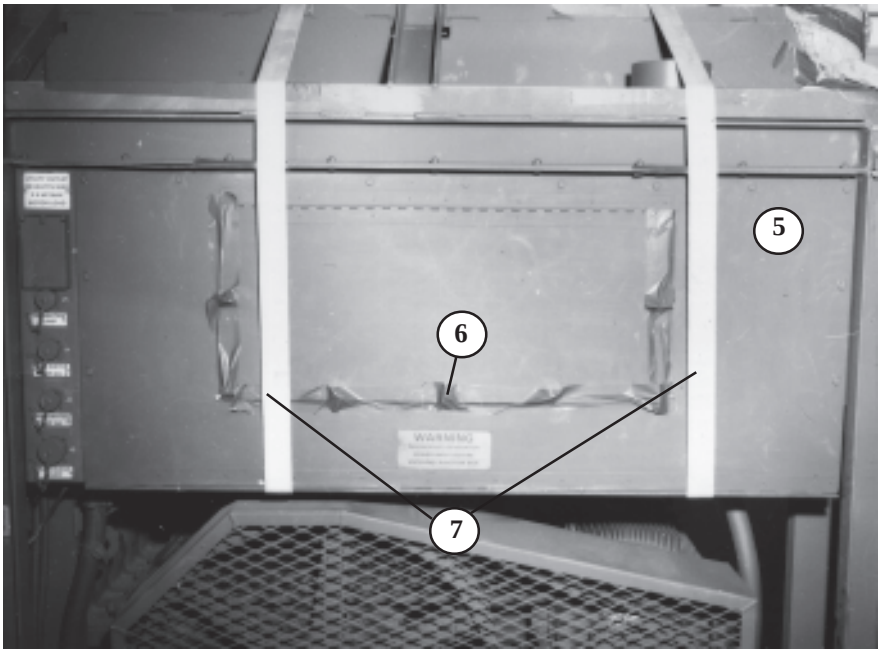


5 Close the control box assembly cover and secure it with the screws provided.

6 Close the circuit breaker plate cover. Secure it with the twist locks provided, and tape the twist locks.

7 Use two tiedown assemblies to secure the control box assembly to the top frame. Pass the lashings around the front panel and over the frame.

*Figure 3-9. Control box assembly prepared (continued)*

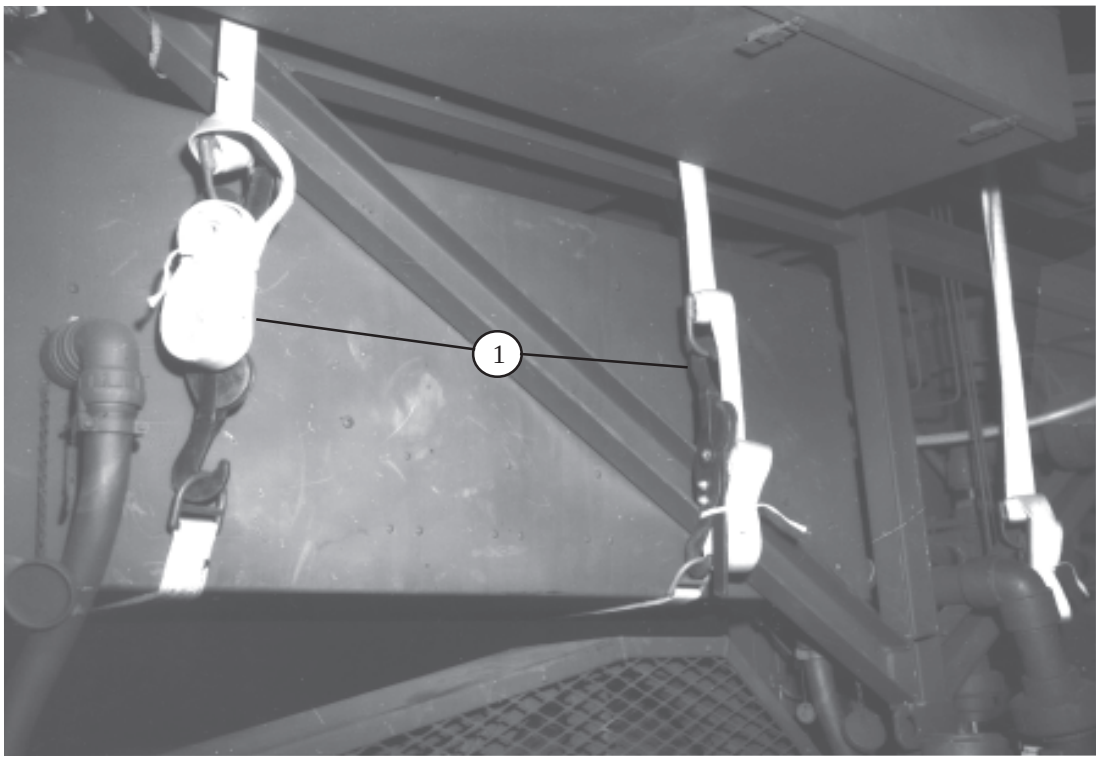


(1) Secure the lashings on the inside of the ROWPU.

*Figure 3-10. Lashings secured on control box*

**d.** Prepare and secure the control panel as shown in Figure 3-11.

**e.** Secure the pulse dampener as shown in Figure 3-12.

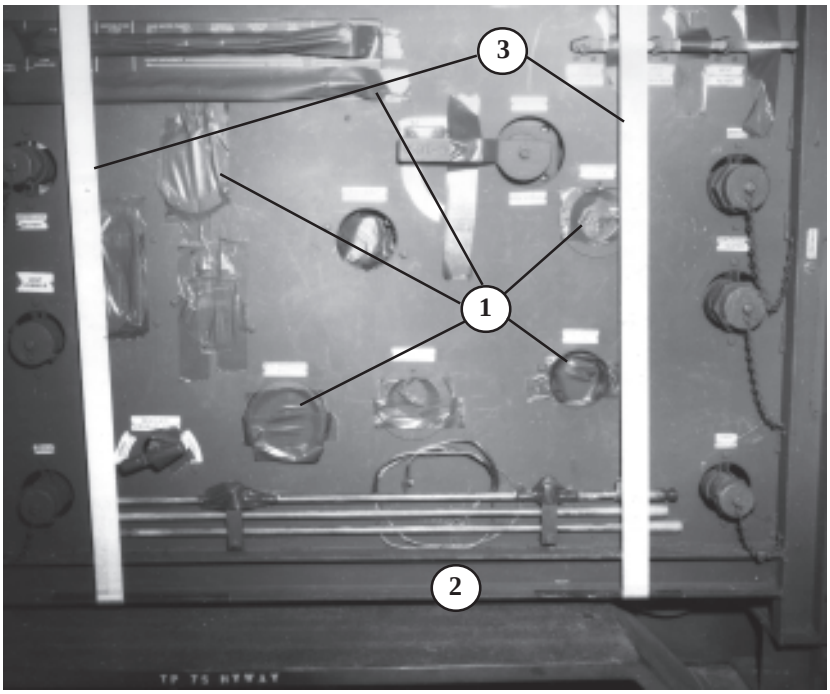


1. Tape all lights, switches, and gauges on the control panel with adhesive tape.
2. Secure the ground rods in the carrying racks on the bottom of the control panel.
3. Use two tiedown assemblies to secure the operational control panel to the top frame, and secure the assemblies on the inside of the ROWPU.

*Figure 3-11. Control panel prepared and secured*

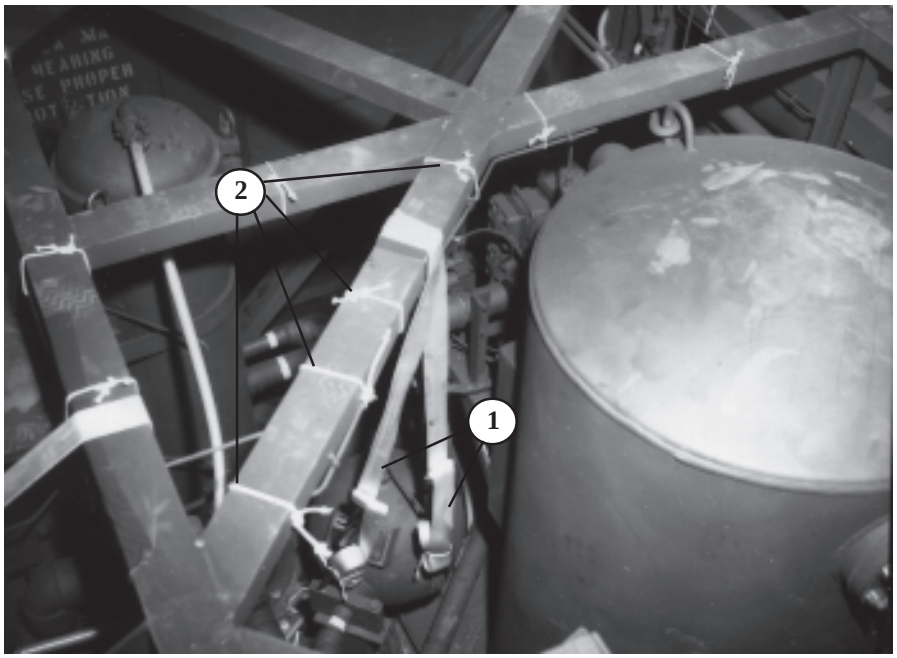


1 Use two tiedown assemblies to secure the pulse dampener to the top frame.

2 Secure the 3/8-inch vent lines to the top frame with six ties of type III nylon cord.

*Figure 3-12. Pulse dampener secured*

**f.** Secure the intervehicular cables and chains to the trailer with type III nylon cord.

**g.** Fold the pump tiedown straps, and tape them to the floor of the ROWPU.

**h.** Stow jacks and jack handles on their support brackets, and secure them with type III nylon cord.

**i.** Make sure the generator's fuel tank is at least one-half but no more than three-fourths full of fuel. Ensure hazardous materials are packaged, marked, and labeled as required by AFJMAN 24-204/TM 38-250.

**j.** Prepare the generator as shown in Figure 3-13.

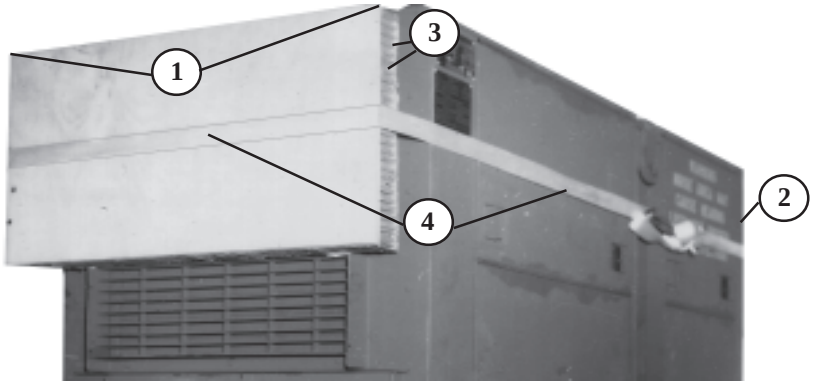


1. Glue a 3/4- by 19- by 34-inch piece of plywood to a 19- by 34-inch piece of honeycomb. Position the plywood and honeycomb with the honeycomb against one end of the generator at the top.
2. Repeat step 1 for the other end of the generator.
3. Tape the edges of the plywood.
4. Form a 30-foot tiedown strap according to FM 10-500-2/TO 13C7-1-5, and use it to secure the end protectors in place.

*Figure 3-13. Generator prepared*

**k.** Prepare the raw water pumps as shown in Figure 3-14, and stow them on the ROWPU.

CAUTION: WHEN STOWING AND SECURING THE SUPPORTING EQUIPMENT, DO NOT STEP ON THE ROWPU PUMP OIL DRAIN VALVE, THE DRAIN HOSES, OR THE OIL GAUGE LOCATED BETWEEN THE ROWPU PUMP AND THE ELECTRIC MOTOR.

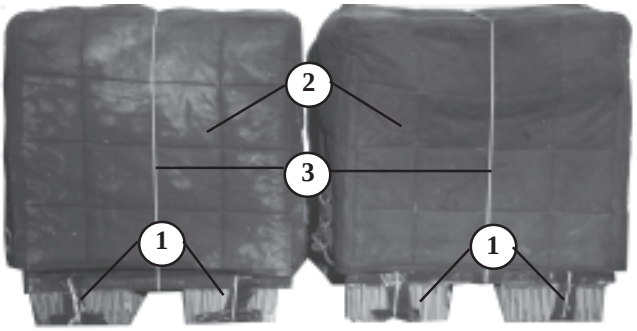


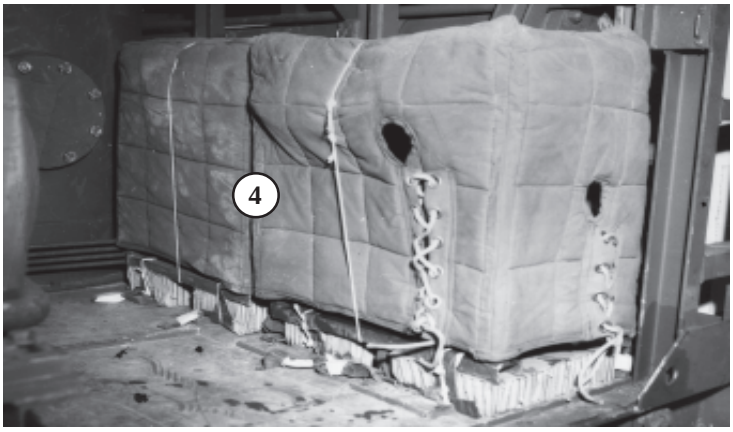


1. Secure two pieces of 8- by 13-inch honeycomb to the bottom frame of each of the two raw water pumps using type III nylon cord.
2. Cover the pumps with their covers.
3. Secure the covers with type III nylon cord.
4. Stow the two raw water pumps inside the ROWPU along the right side as viewed from the rear of the load.

*Figure 3-14. Raw water pumps prepared and stowed*

**l.** Prepare, stow, and secure the backwash pump as shown in Figure 3-15.

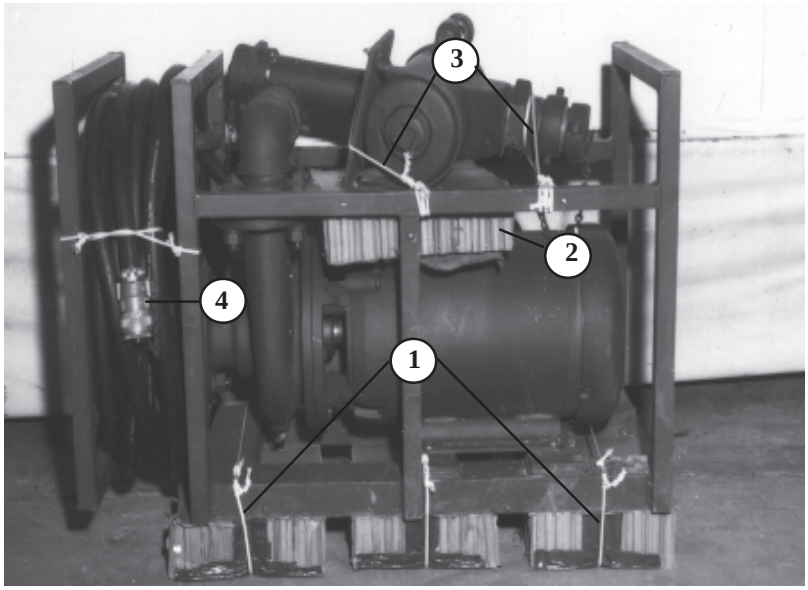


1. Secure three 8-inch by 16-inch pieces of honeycomb to the bottom frame of the backwash pump using type III nylon cord.
2. Place one 10-inch by 13-inch piece of honeycomb on top of the motor of the backwash pump.
3. Position the pump strainer on the previously positioned honeycomb, and secure it to the top frame of the pump with type III nylon cord.
4. Secure the end of the hose to the frame to prevent the hose from unraveling.

*Figure 3-15. Backwash pump prepared, stowed, and secured*

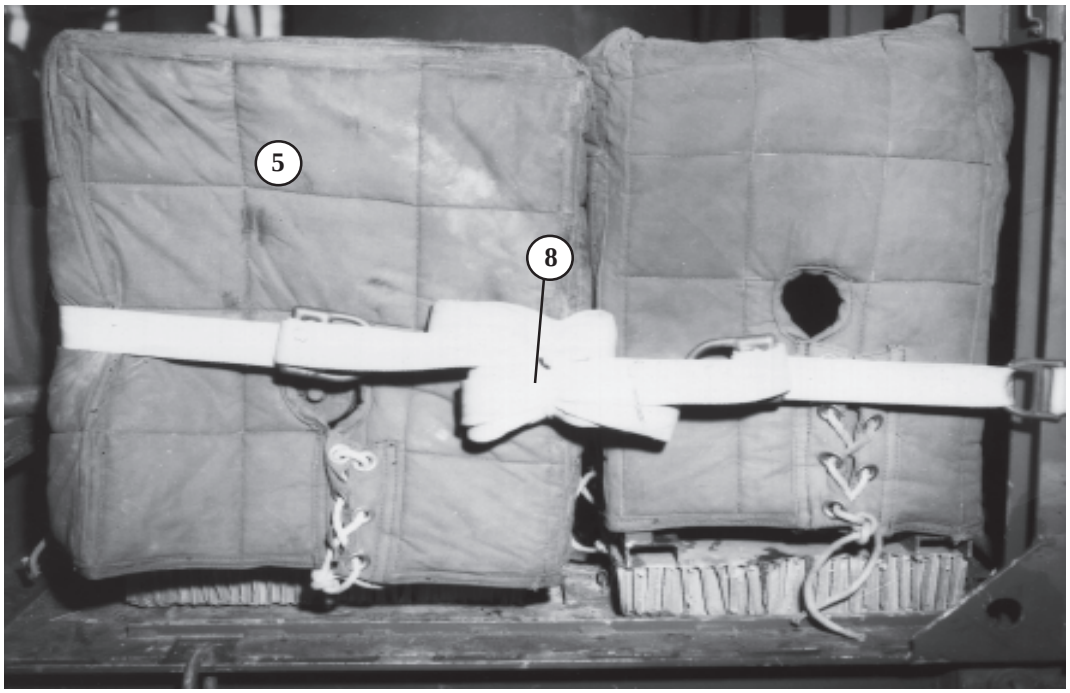


5 Place the cover on the backwash pump, and secure it with type III nylon cord. Set the pump inside the ROWPU between the raw water pumps and the ROWPU motor.

6 Pass one tiedown strap to the first inside vertical brace of the ROWPU (not shown), around the frame, and through its own D-ring to the first inside vertical brace (not shown).

7 Pass another tiedown strap to the third vertical brace of the ROWPU (not shown) in the same manner as in step 6.

8 Pass the straps around the three pumps, and secure the ends with D-rings.

*Figure 3-15. Backwash pump prepared, stowed, and secured (continued)*

**m.** Prepare and stow the canvas hoses as shown in Figure 3-16.

**n.** Prepare, stow and secure the two storage chests as shown in Figure 3-17.

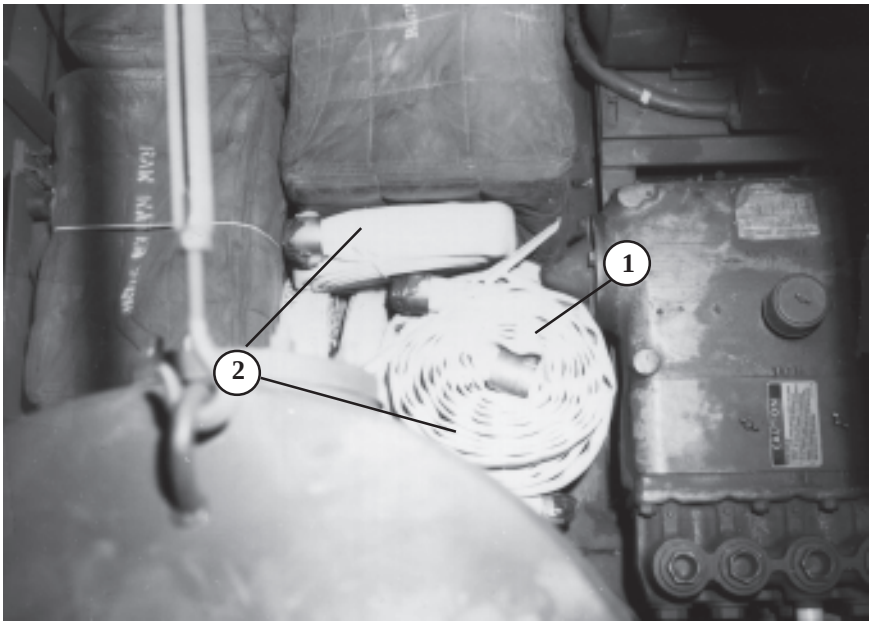


(1) Roll up each canvas hose section, and tie it with type III nylon cord.

(2) Stow the canvas hoses behind the pumps.

*Figure 3-16. Canvas hose prepared and stowed*

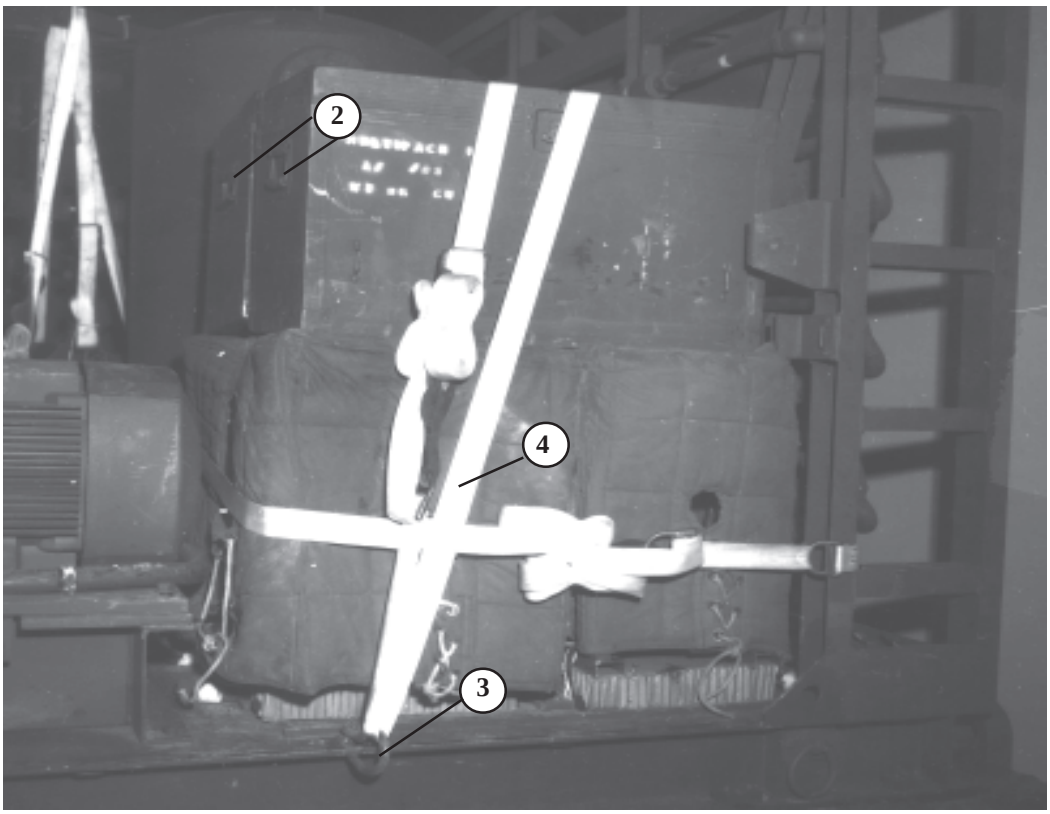


1. Pad the contents inside the two storage chests with cellulose wadding (not shown). Secure the chest closed with type III nylon cord (not shown).
2. Stow the two storage chests on top of the three pumps.
3. Attach a tiedown clevis to the center tiedown hole on the floor of the ROWPU.
4. Run a 30-foot lashing around the third inside vertical brace of the ROWPU. Pass the free end of the lashing over the chests and through the tiedown clevis. Secure it to its D-ring with a load binder.

*Figure 3-17. Storage chests prepared, stowed, and secured*

**o.** Place the wooden staves of the water tank beside the ROWPU pump and motor. Secure the staves to the floor with two lengths of type III nylon cord.

**p.** Set the sledgehammer next to the third inside vertical brace. Secure it to the brace with type III nylon cord.

**q.** Set the paddle and float behind the inside storage chest, and secure them together with type III nylon cord.

**r.** Stack the five gallon plastic water containers behind the ROWPU pump, and tie them to a convenient point with type III nylon cord.

**s.** Prepare and stow the rubber hoses as shown in Figure 3-18.

**t.** Prepare, stow, and secure the water tanks as shown in Figure 3-19.

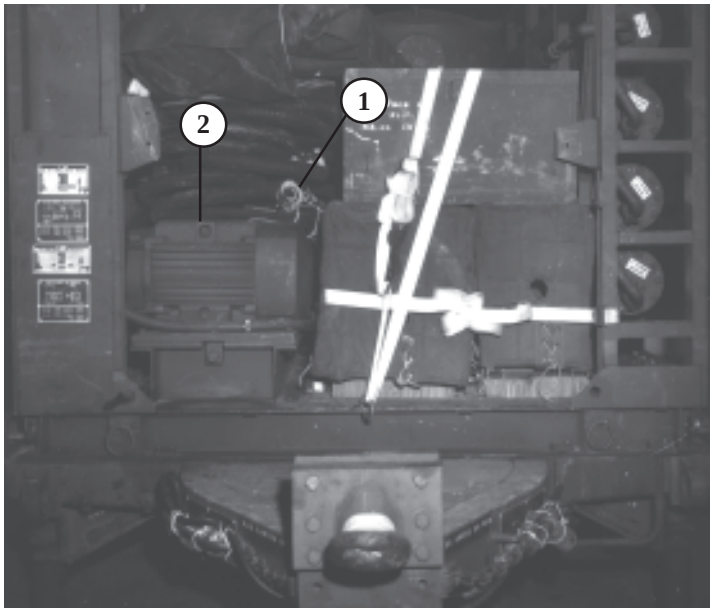


1. Roll up each 10-foot section of rubber hose, and tie it with type III nylon cord.
2. Stow the rubber hoses on top of the ROWPU pump.

*Figure 3-18. Rubber hoses prepared and stowed*

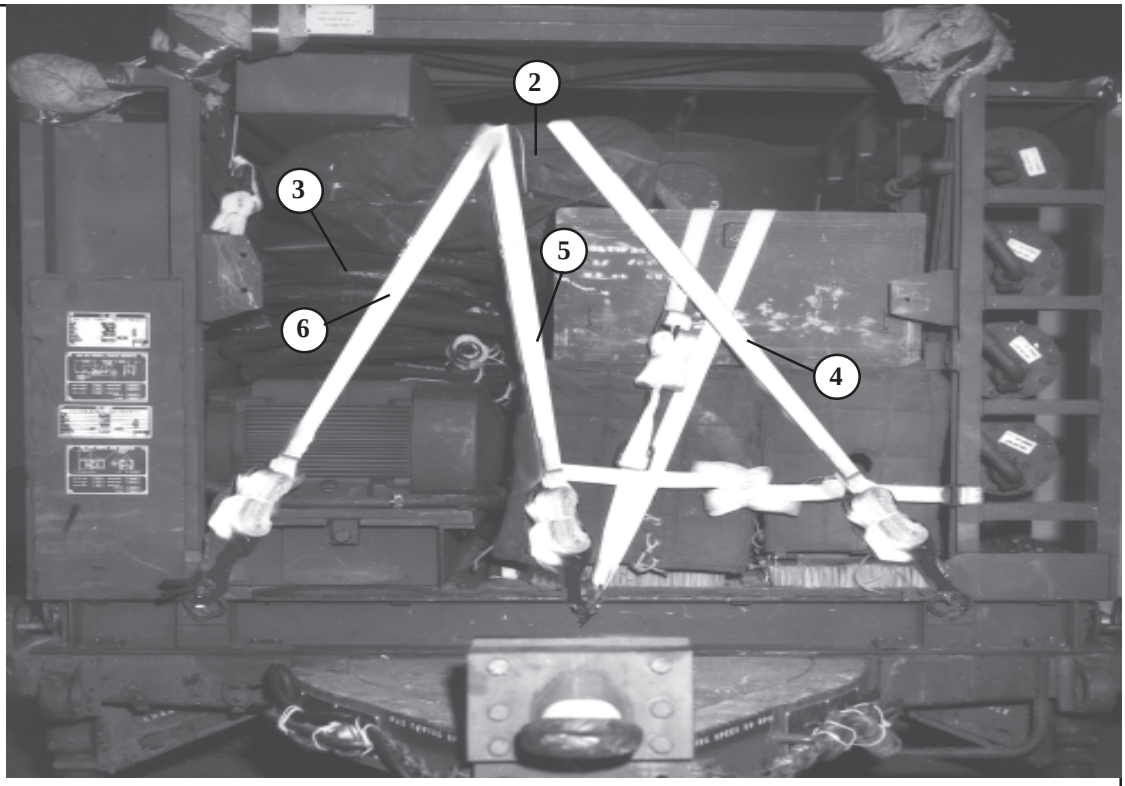


1. Fold each water tank, and tie it with type III nylon cord (not shown).
2. Cover the tanks with canvas, and secure the canvas with type III nylon cord.
3. Stow the water tanks and the ROWPU cover on the rubber hoses.
4. Attach one 15-foot lashing to the tiedown provision on the third inside vertical brace on the right side. Pass the strap over the tanks and attach it to the left bottom corner tiedown provision of the ROWPU.
5. Attach one 15-foot lashing to the center floor tiedown provision. Pass the strap from the center tiedown provision over the tanks to the center floor tiedown provision on the other side of the ROWPU.
6. Attach one 15-foot lashing to the tiedown provision on the third inside vertical brace on the left side. Pass the strap over the tanks, and attach it to the right bottom corner tiedown provision of the ROWPU.

*Figure 3-19. Water tanks prepared, stowed and secured*

**u.** Install and secure cross braces as shown in Figure 3-20.

**v.** Prepare, stow, and secure the distribution pump as shown in Figure 3-21.

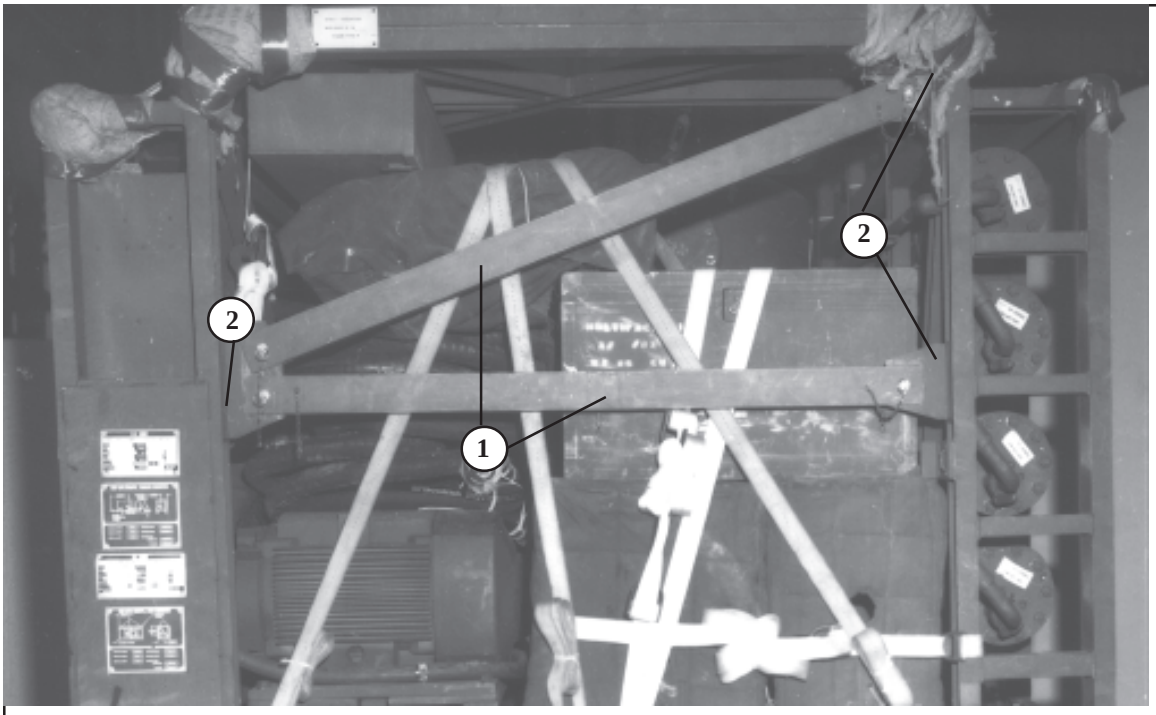


1. Install the cross braces on the frame.
2. Secure the cross braces by inserting the locking pins provided.

*Figure 3-20. Cross braces installed and secured*

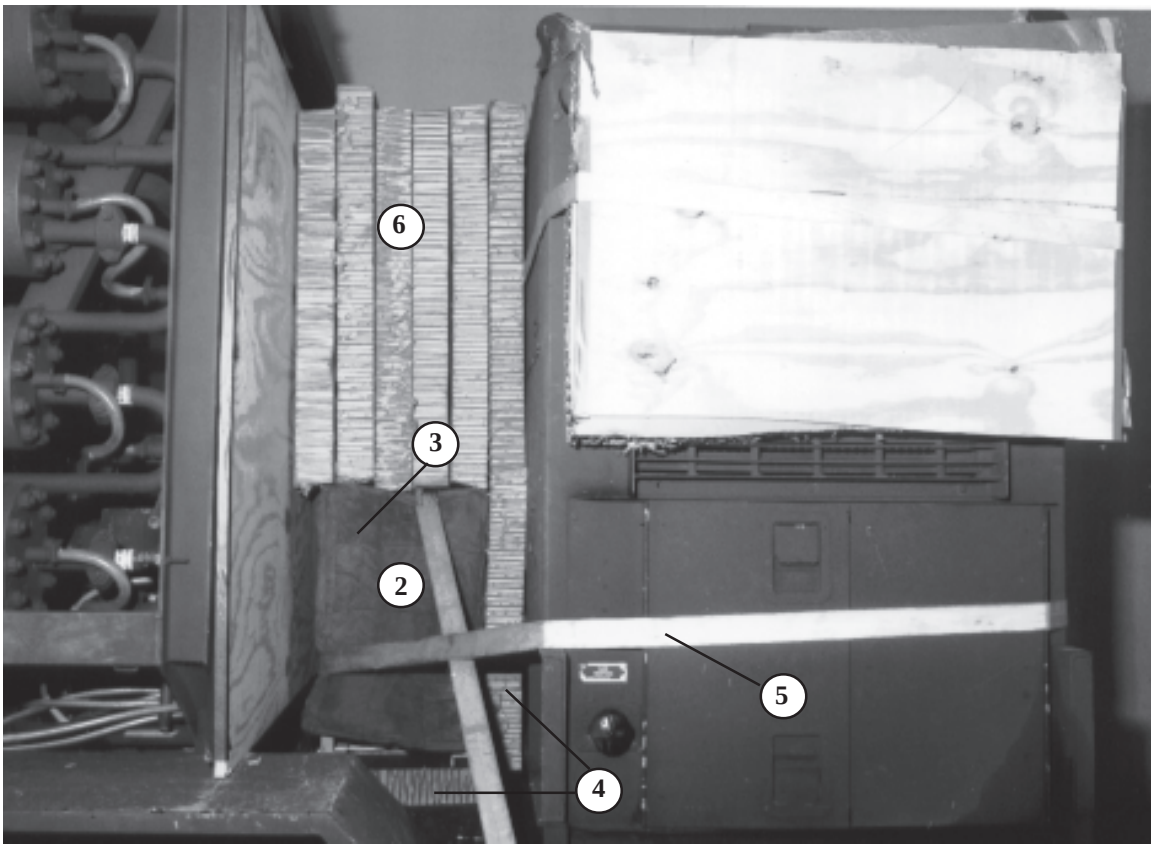


1. Secure two pieces of 8-inch by 13-inch honeycomb to the bottom frame of the distribution pump using type III nylon cord (not shown).
2. Cover the pump.
3. Stow the pump in the bed of the trailer between the water purification unit and the generator.
4. Cut two pieces of 23-inch by 24-inch honeycomb. Lift the pump, and place one piece under the pump. Place the other piece between the pump and the generator.
5. Form two 30-foot tiedown straps according to FM 10-500-2/TO 13C7-1-5. Pass one strap around the pump and the generator.
6. Cut four pieces of 36-inch by 48-inch honeycomb. Place all four pieces on top of the pump.

*Figure 3-21. Distribution pump, stowed, and secured*

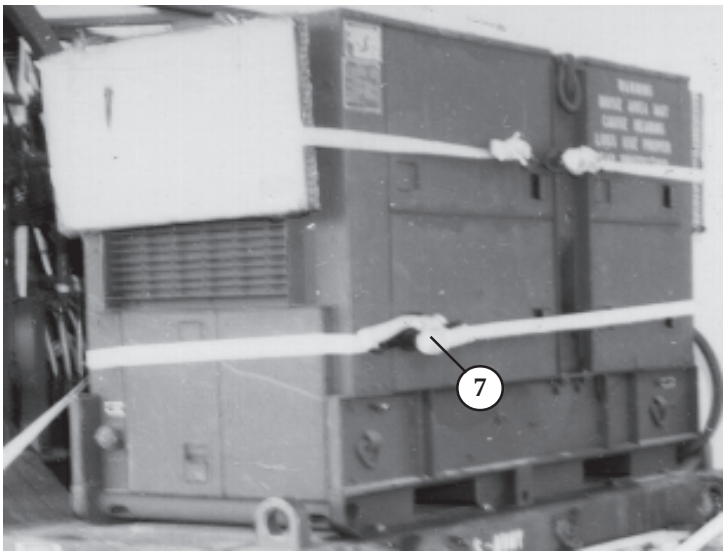


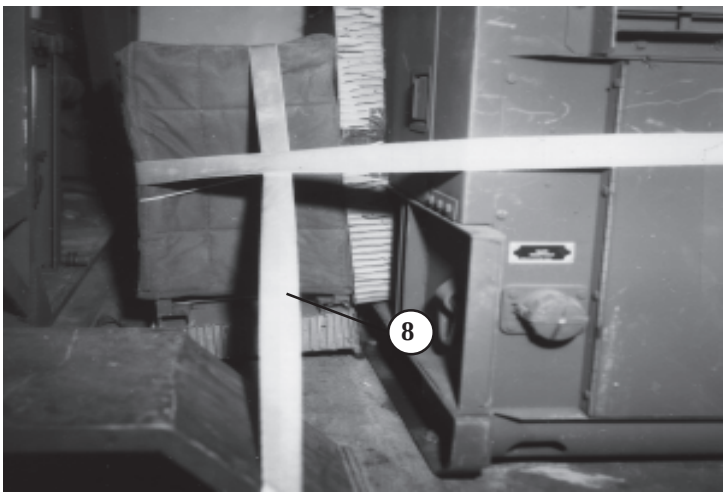


(7) Secure the lashing.

(8) Pass the other strap over the pump and under the trailer, and secure it.

*Figure 3-21. Distribution pump, stowed, and secured (continued)*

## 3-5. Lifting and Positioning Load

Use available slings to lift the ROWPU. After lifting the ROWPU, prepare it for positioning as shown in Figure 3-22. Then position the ROWPU as shown in Figure 3-23.

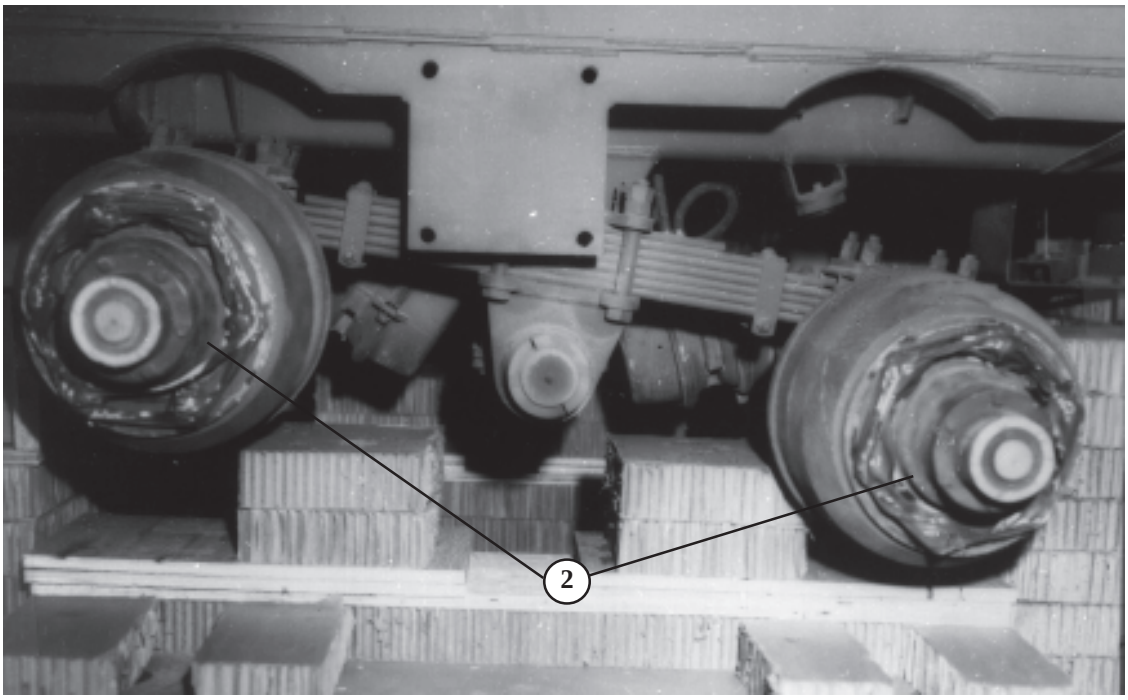


1. Remove the four wheels and the spare (not shown). (They will be stowed on the platform after the lashings are installed).
2. Place the lug nuts back on the lugs, and tape them.

*Figure 3-22. ROWPU prepared for positioning*

CAUTION: ENSURE THAT THE AIR TANK RELEASE VALVE FITS INTO THE 8-INCH BY 8-INCH HOLE IN THE PLYWOOD OF STACK 5.

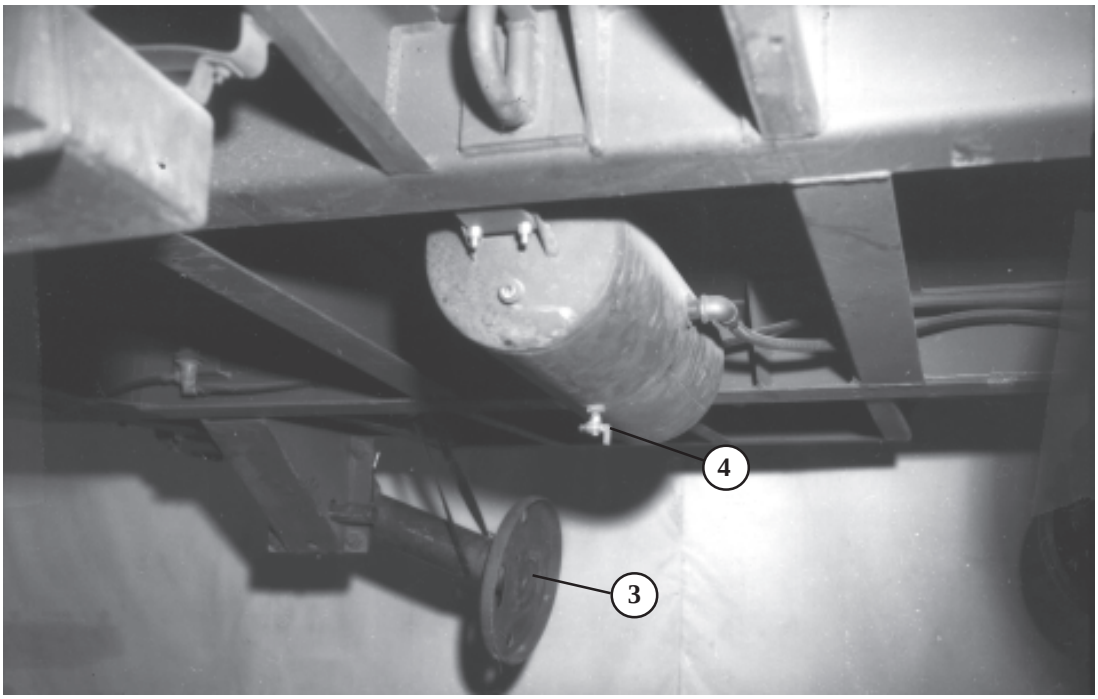


3 Raise the leveling jacks into the travel position, and secure them with 1/2-inch tubular nylon cord.

4 Position the air tank release valve over the 8- by 8-inch hole in the plywood of stack 5.

*Figure 3-22. ROWPU prepared for positioning (continued)*

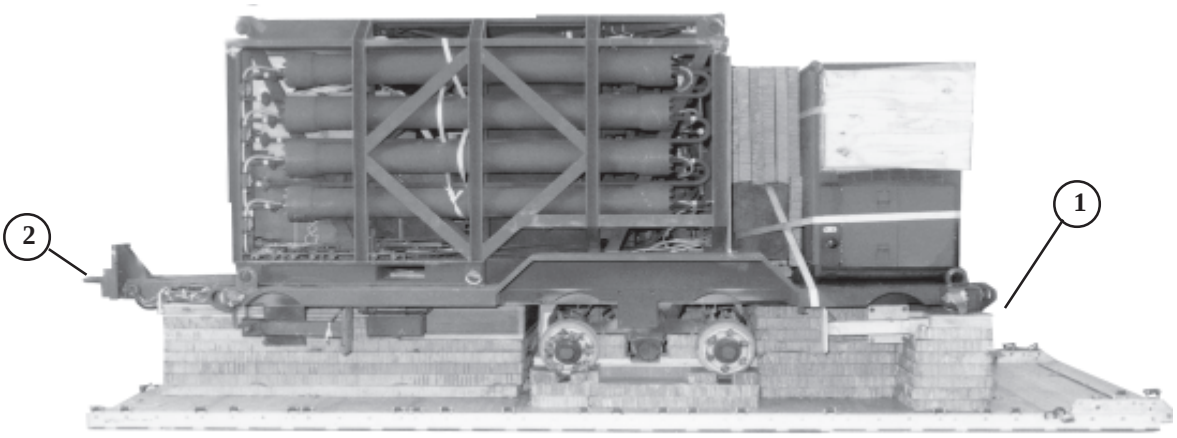


1. Set the ROWPU on the honeycomb stacks with the rear of the trailer 3 1/2 inches from the front edge of honeycomb stack 1.
2. Allow the drawbar to overhang the rear of the platform by 35 inches.

*Figure 3-23. ROWPU positioned on platform*

**3-6. Lashing the ROWPU**

Lash the ROWPU to the platform as shown in Figures 3-24 through 3-26. Install and safety the tiedown assemblies according to FM 10-500-2/ TO 13C7-1-5.

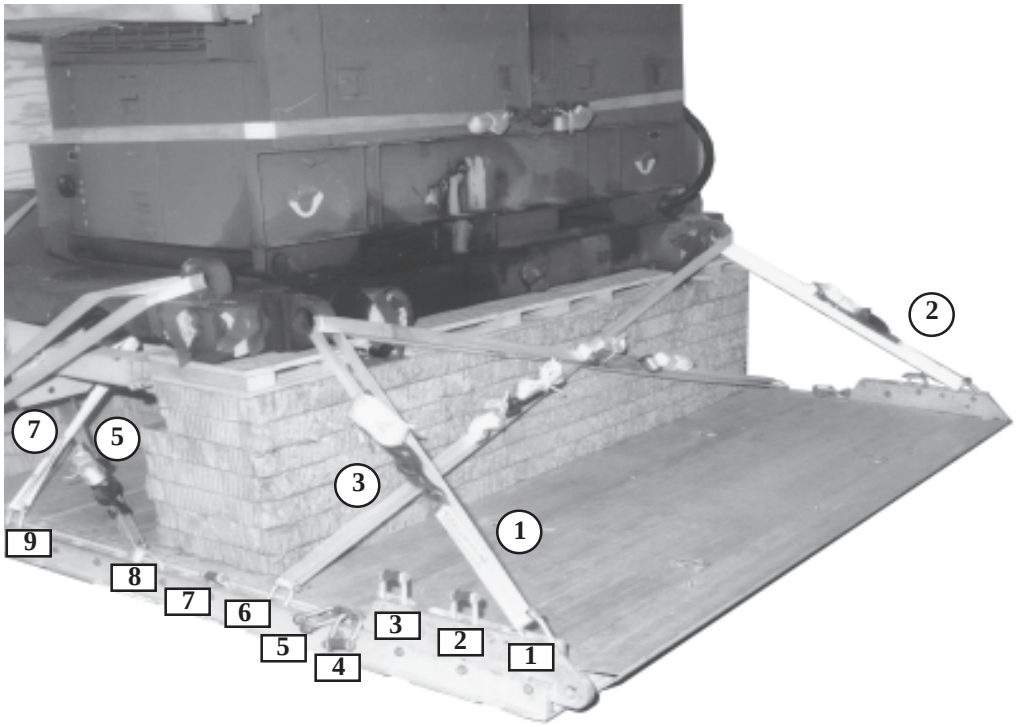


| Lashing Number | Tiedown Clevis Number | Instructions |
|---|---|---|
| | | Pass lashing through: |
| 1 | 1 | Left rear tiedown eye of the ROWPU. |
| 2 | 1A | Right rear tiedown eye of the ROWPU. |
| 3 | 6 | Right rear tiedown eye of the ROWPU. |
| 4 | 6A | Left rear tiedown eye of the ROWPU. |
| 5 | 8 | Around rear axle. |
| 6 | 8A | Around rear axle. |
| 7 | 9 | Tiedown provision number 4 right side. |
| 8 | 9A | Tiedown provision number 4 left side. |

*Figure 3-24. Lashings 1 through 8 installed*

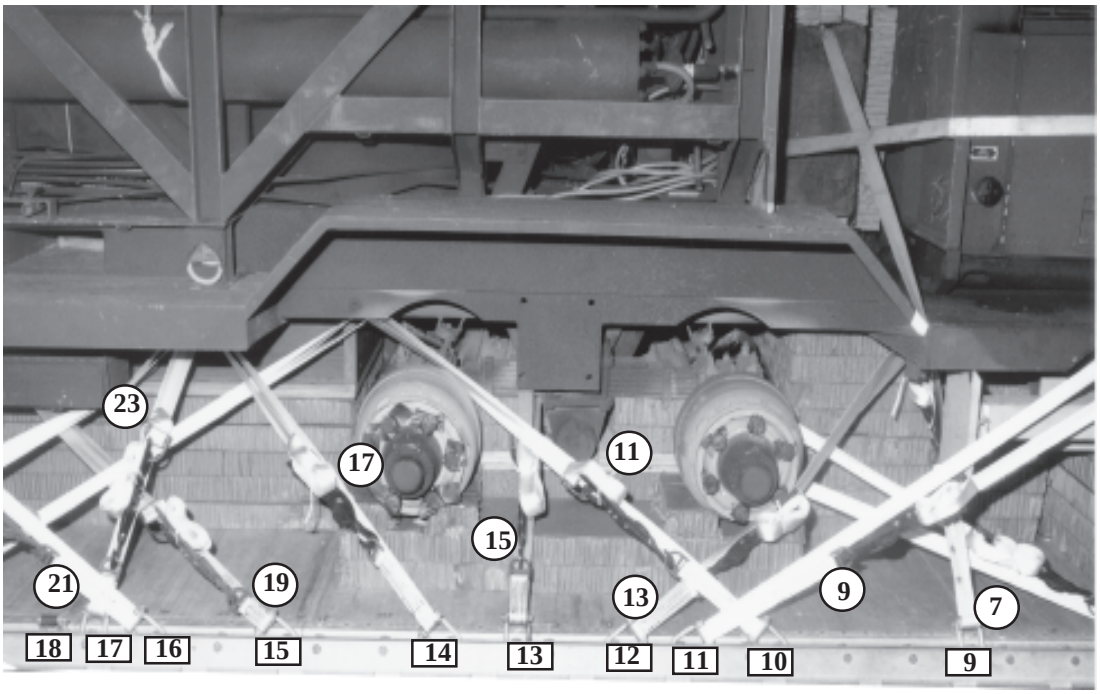


| Lashing Number | Tiedown Clevis Number | Instructions |
|---|---|---|
| | | Pass lashing through: |
| 9 | 10 | Tiedown provision number 3 right side. |
| 10 | 10A | Tiedown provision number 3 left side. |
| 11 | 11 | Rear lifting eye. |
| 12 | 11A | Rear lifting eye. |
| 13 | 12 | Tiedown provision number 4 right side. |
| 14 | 12A | Tiedown provision number 4 left side. |
| 15 | 13 | Around leaf spring. |
| 16 | 13A | Around leaf spring. |
| 17 | 14 | Tiedown provision number 2 right side . |
| 18 | 14A | Tiedown provision number 2 left side. |
| 19 | 15 | Tiedown provision number 1 right side. |
| 20 | 15A | Tiedown provision number 1 left side. |
| 21 | 16 | Front lifting eye. |
| 22 | 16A | Front lifting eye. |
| 23 | 17 | Tiedown provision number 2 right side. |
| 24 | 17A | Tiedown provison number 2 left side. |

*Figure 3-25. Lashings 9 through 24 installed*

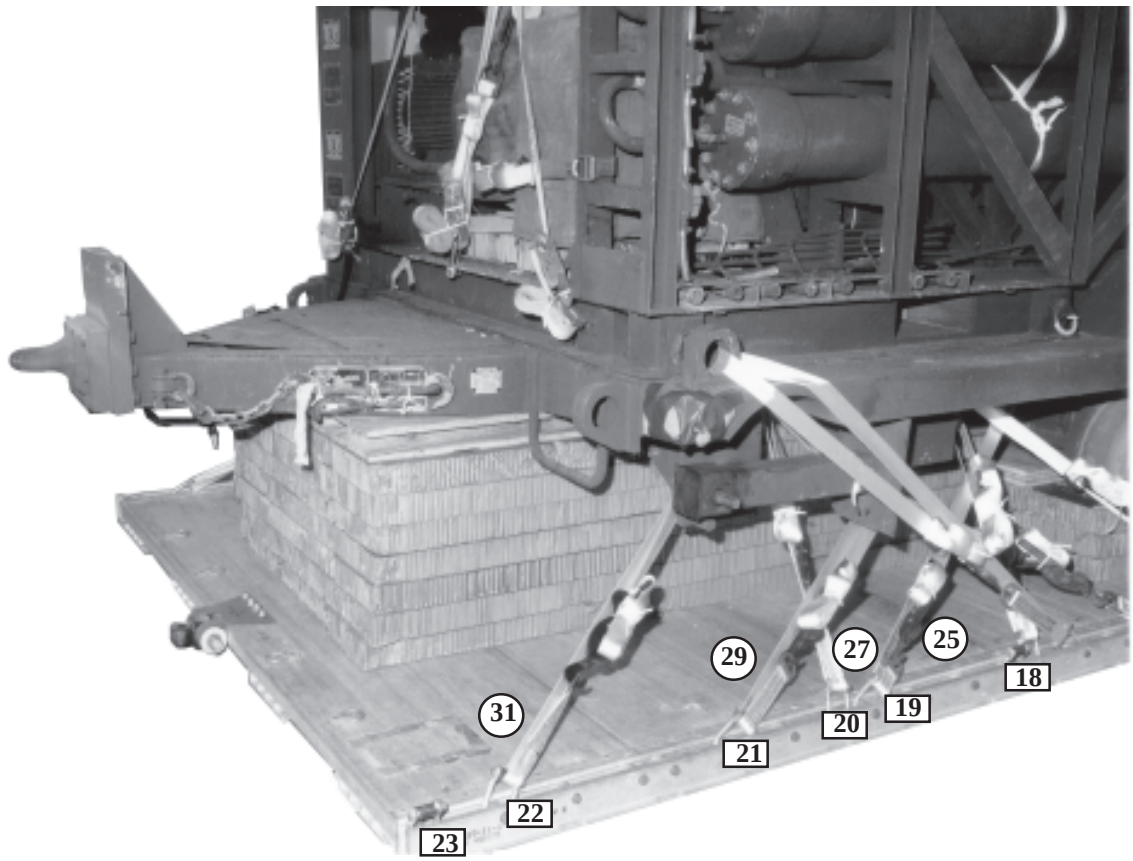


| Lashing Number | Tiedown Clevis Number | Instructions |
|---|---|---|
| | | Pass lashing through: |
| 25 | 19 | Tiedown provision 3 right side. |
| 26 | 19A | Tiedown provision 3 left side. |
| 27 | 20 | Tiedown provision 1 right side. |
| 28 | 20A | Tiedown provision 1 left side. |
| 29 | 21 | Tiedown provision 2 right side. |
| 30 | 21A | Tiedown provision 2 left side. |
| 31 | 22 | Tiedown provision 1 right side. |
| 32 | 22A | Tiedown provision 1 left side. |

*Figure 3-26. Lashings 25 through 32 installed*

## 3-7. Constructing End Boards and Stowing and Lashing Tires

Construct the end boards and stow and lash the tires as described below.

**a.** Construct two end boards using two pieces of 3/4-inch by 36-inch by 48-inch plywood as shown in Figure 3-27.

**b.** Stow and lash the tires as shown in Figure 3-28.

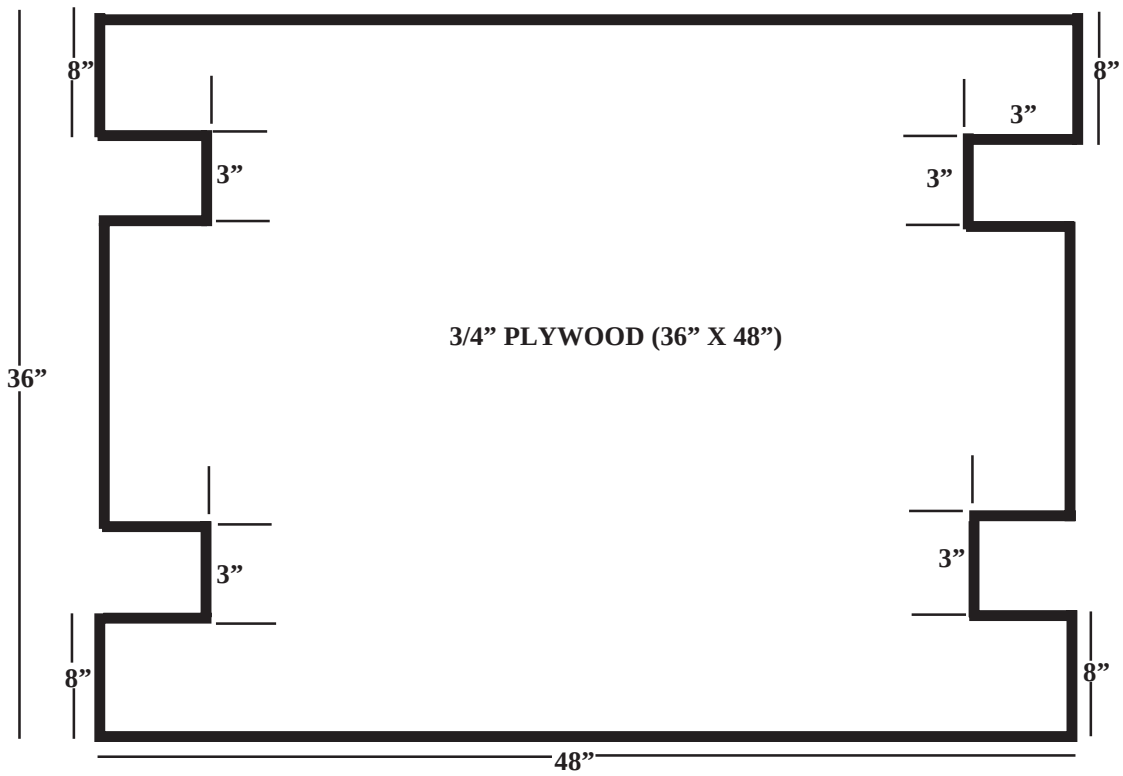


(1) Cut four 3-inch notches in each end board. Make the notches 8 inches from the top and bottom of the board.

*Figure 3-27. End boards constructed*

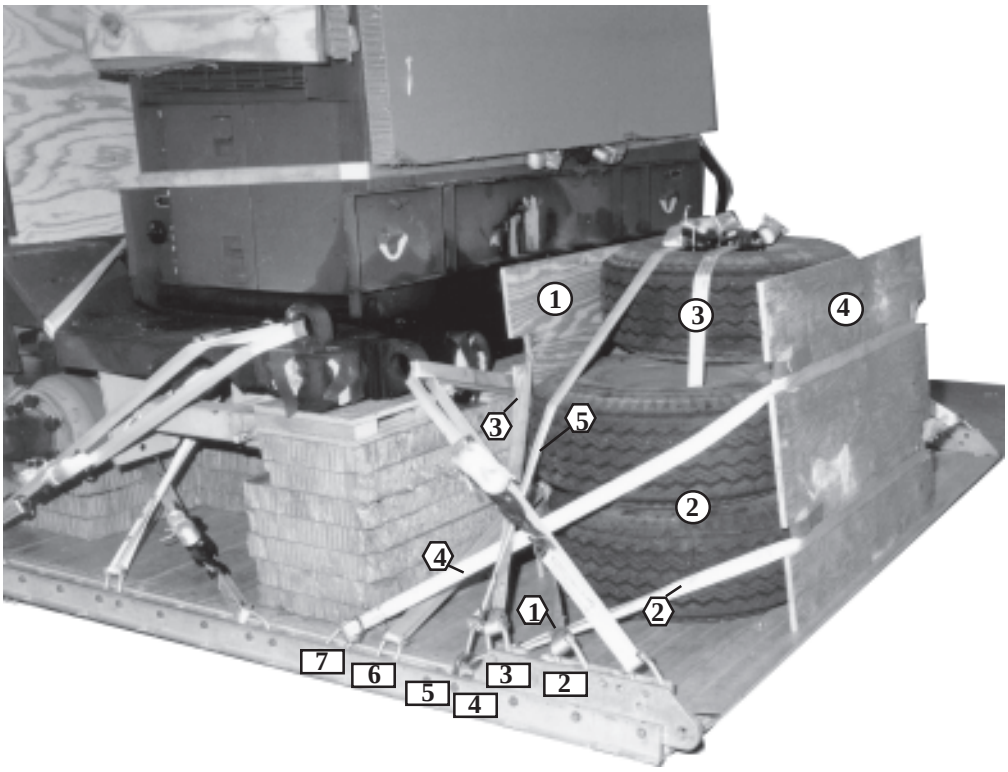


1. Set one end board against the rear of the ROWPU.
2. Stow the five tires on the front of the platform against the end board.
3. Pass a lashing through the centers of the tires, and secure the tires together.
4. Set the other end board against the front of the tires.

| Lashing Number | Tiedown Clevis Number | Instructions |
|---|---|---|
| | | Pass lashing through: |
| 1 | 2 to 2A | Its own D-ring through the rear bottom cutouts to clevis 2A. |
| 2 | 4 to 4A | Its own D-ring through the front bottom cutouts to clevis 4A. |
| 3 | 3 to 3A | Its own D-ring through the rear top cutouts to clevis 3A. |
| 4 | 7 to 7A | Its own D-ring through the front top cutouts to clevis 7A. |
| 5 | 5 to 5A | Clevis 5 and its own D-ring and run over the top of the tires. Pass second lashing through clevis 5A and its own D-ring and run over the top of the tires and secure to lashing from clevis 5 on top of the tires with load binder. |

*Figure 3-28. Lashings 1 through 5 installed*

## 3-8. Constructing and Installing Parachute Stowage Platform

Construct and install parachute stowage platform as shown in Figure 3-30 and as described below.

**a.** Construct the honeycomb stacks as shown in Figure 3-29.

**b.** Construct the stowage platform as shown in Figure 3-30.

**c.** Lash the stowage platforms as shown in Figure 3-31.

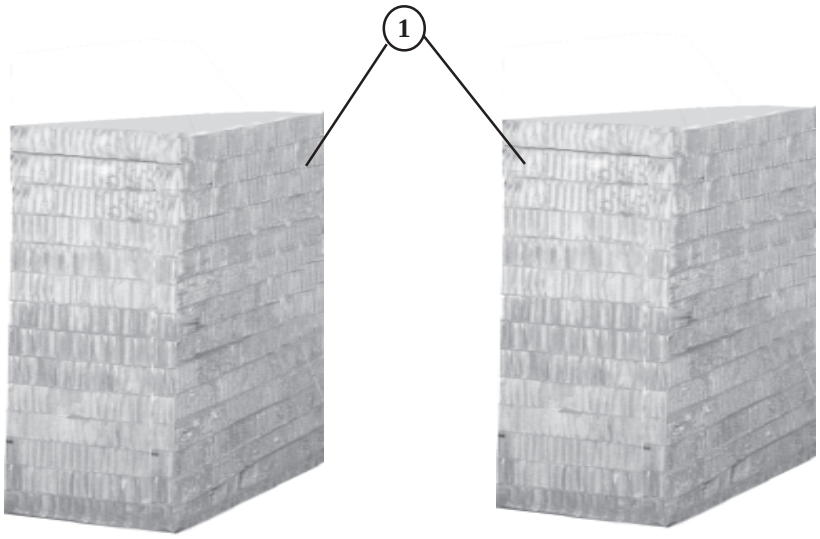


1. Cut 28 pieces of 13- by 34-inch honeycomb. Place 14 pieces of honeycomb in each stack and glue them together.
2. Set stacks on the rear of the platform inside the trailer's front tiedown eyes and flush with the front of the trailer (not shown).
3. Center the stowage platform on the honeycomb stacks (not shown).

*Figure 3-29. Parachute platform stack prepared*

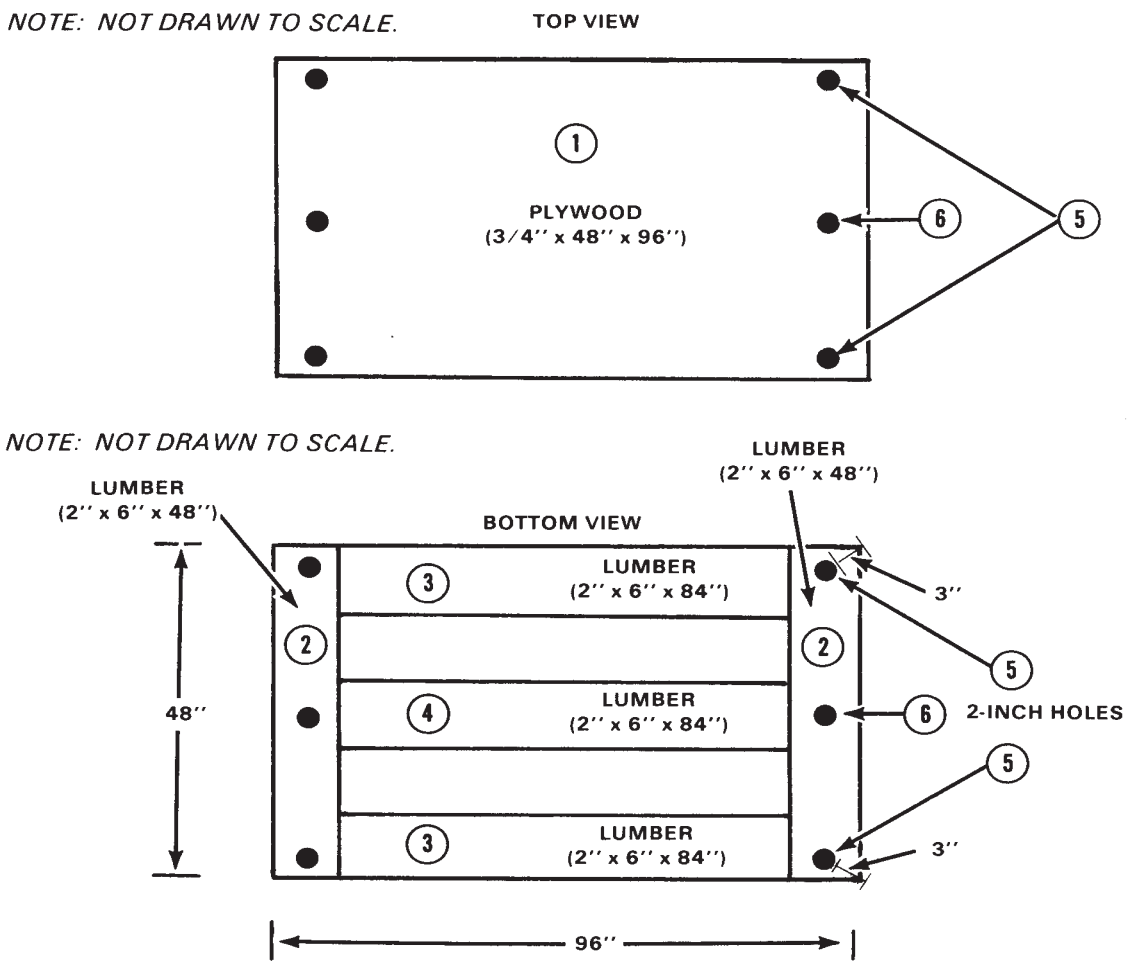


1. Start construction of the parachute stowage platform with a 3/4- by 48- by 96-inch piece of plywood.
2. Nail a 2- by 6- by 48-inch piece of lumber along each 48-inch side of the plywood.
3. Nail a 2- by 6- by 84-inch piece of lumber along each 48-inch side of the plywood.
4. Center a 2- by 6- by 84-inch piece of lumber between the other two 2- by 6- by 84-inch pieces of lumber, and nail it to the plywood.
5. Drill 2-inch holes 3 inches from each corner.
6. Drill one 2-inch hole centered between the corner holes on each 48-inch side of the plywood.

**NOTE: ALL NAILING IS DONE FROM THE PLYWOOD SIDE TO MAINTAIN A SMOOTH SURFACE.**

*Figure 3-30. Parachute stowage platform constructed*

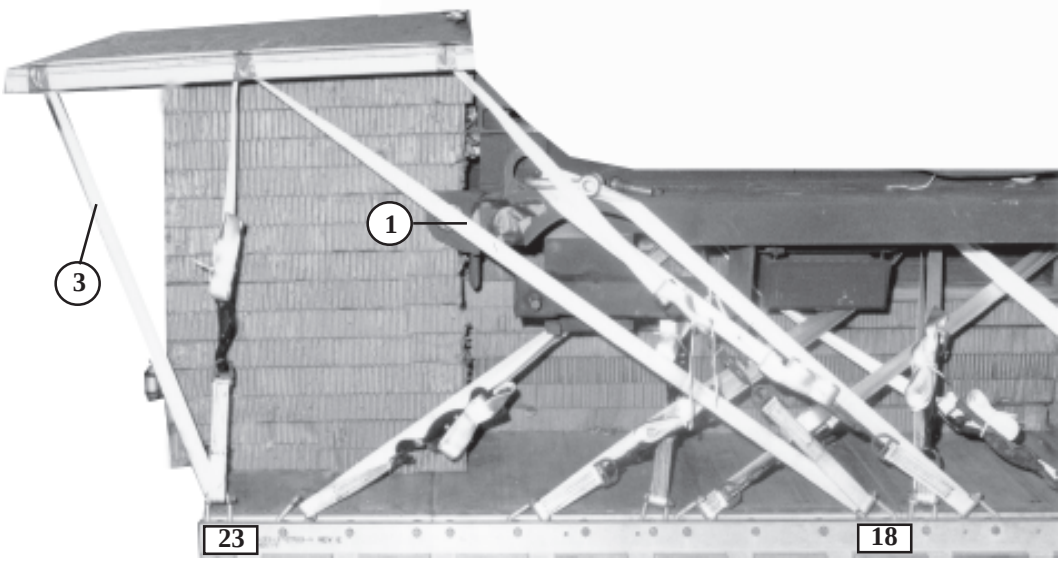


| Lashing Number | Tiedown Clevis Number | Instructions |
|---|---|---|
| | | Pass lashing through: |
| 1 | 18 | The right front hole down through the right center hole to clevis 18. |
| 2 | 18A | The left front hole down through the left center hole to clevis 18A. |
| 3 | 23 | The right rear hole down through the center hole to clevis 23. |
| 4 | 23A | The left rear hole down through the left center hole to clevis 23A. |

*Figure 3-31. Lashings 1 through 4 on stowage platform installed*

**3-9. Installing Load Cover, Deadman's Tie and Suspension Slings**

Cover the load and install the suspension slings and deadman's tie as shown in Figure 3-32.

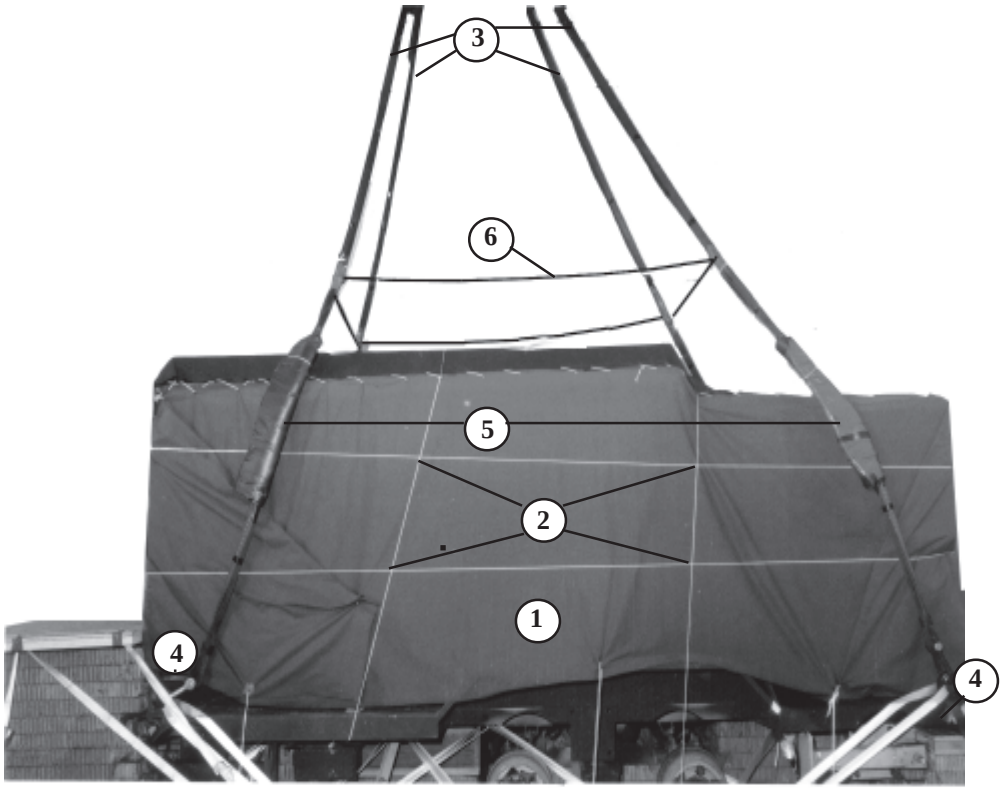


1. Place a 17- by 35-foot canvas cover over the load from the generator to the front of the ROWPU.
2. Secure the cover in place with ties of type III nylon cord.
3. Use four 16-foot (4-loop), type XXVI nylon slings as the suspension slings.
4. Attach a sling to each lifting point with a large clevis. Attach the clevis with the bell of the clevis through the lifting point, and secure the bolt through the plies of the sling.
5. Use four 36-by 10-inch pieces of felt to pad the slings where they come in contact with the top of the ROWPU.
6. Install the deadman's tie as outlined in FM 10-500-2/TO 13C7-1-5.

*Figure 3-32. ROWPU covered and suspension slings installed*

## 3-10. Stowing Cargo Parachutes

Stow five G-11 cargo parachutes on the load according to FM 10-500-2/TO 13C7-1-5 and as shown in Figure 3-33.

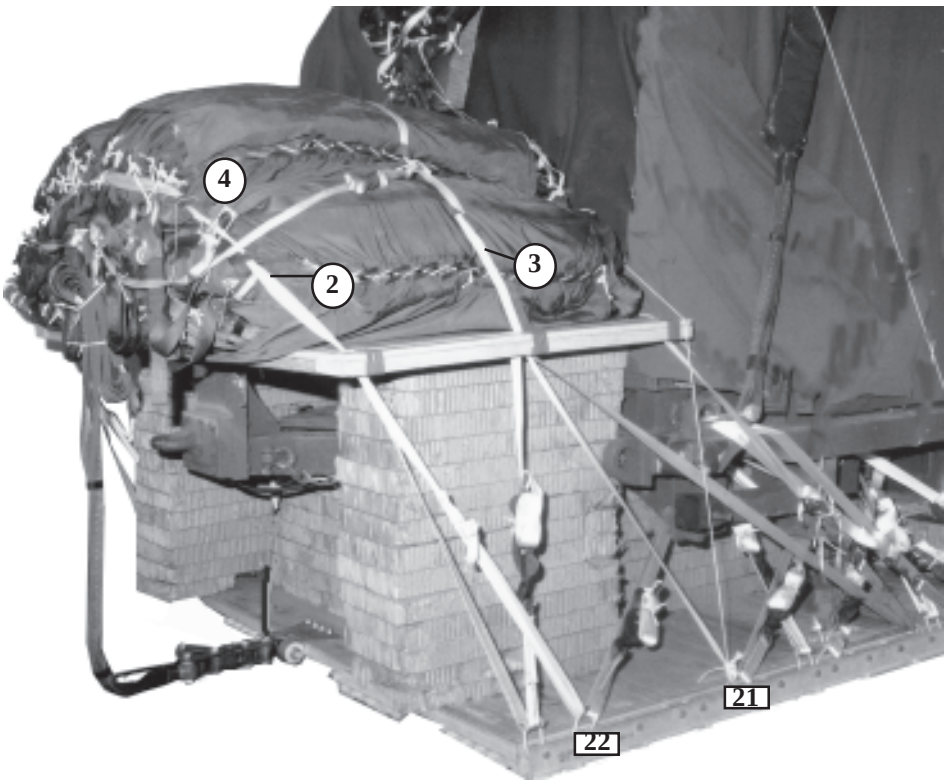


1. Secure the G-11 cargo parachutes with two lengths of type VIII nylon webbing.
2. Run one length of type VIII nylon webbing from clevis 22, through the front carrying handles, and over to clevis 22A.
3. Run one length of type VIII nylon webbing from clevis 21, through the center carrying handles, and over to clevis 21A.
4. Attach parachute release knives as outlined in FM 10-500-2/TO 13C7-1-5.

*Figure 3-33. Cargo parachutes stowed*

**3-11. Installing M-2 Parachute Release Assembly**

Install the M-2 parachute release assembly according to FM 10-500-2/TO 13C7-1-5 and as shown in Figure 3-34.

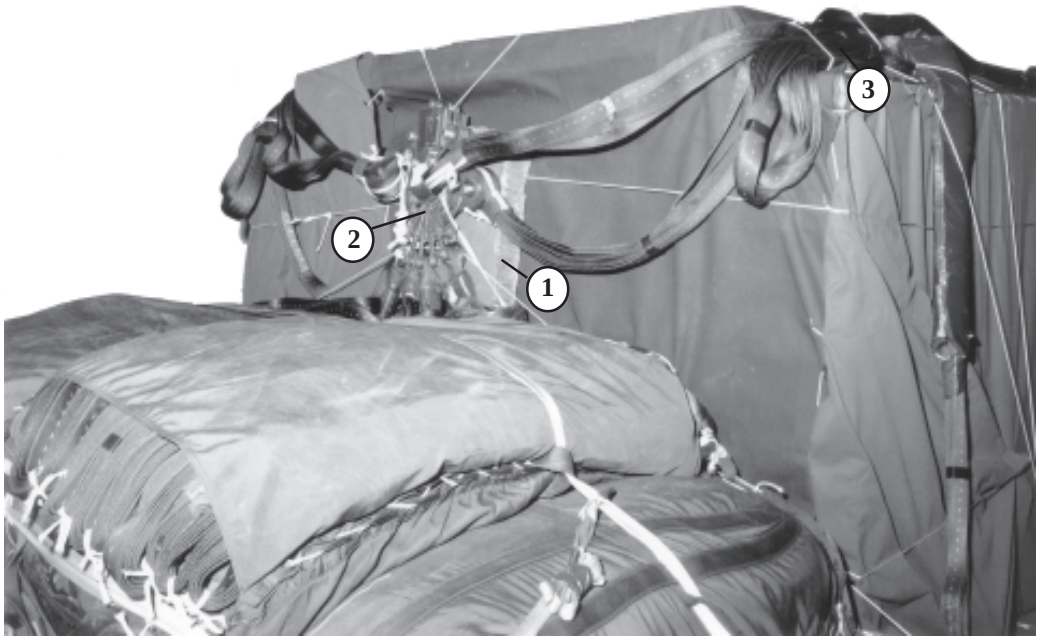


(1) Cut and secure a 24- by 24 inch piece of honeycomb on top of and centered on the front of the ROWPU.

(2) Position and install the M-2 release assembly against the honeycomb and safety it to the load in accordance with FM 10-500-2/TO 13C7-1-5.

(3) Fold and tie any slack in the suspension slings with type I, 1/4- inch cotton webbing.

Note: Slings must be safetied in a manner as to not increase the height of the load.

*Figure 3-34. M-2 release assembly installed*

## 3-12. Installing Extraction System

Install the extraction system according to FM 10-500-2/TO 13C7-1-5 and as shown in Figure 3-35.

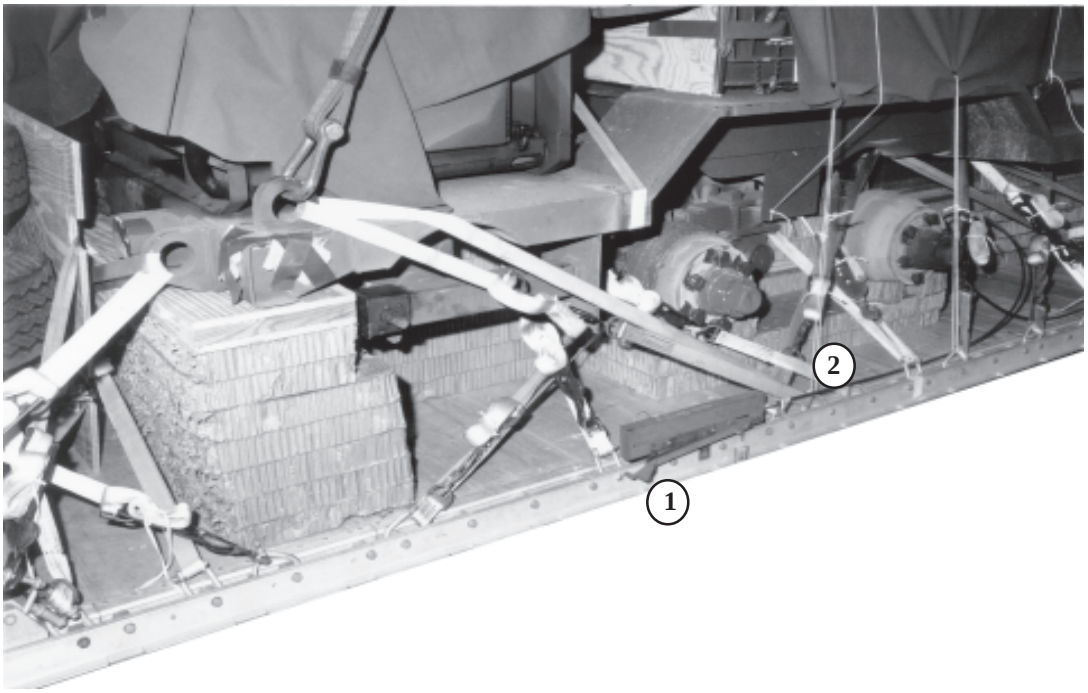


1. Bolt the actuator bracket using the rear mounting holes on the left side rail.
2. Attach a 20-foot release cable to the actuator assembly. Install actuator assembly to the actuator bracket.

*Figure 3-35. Extraction system installed*

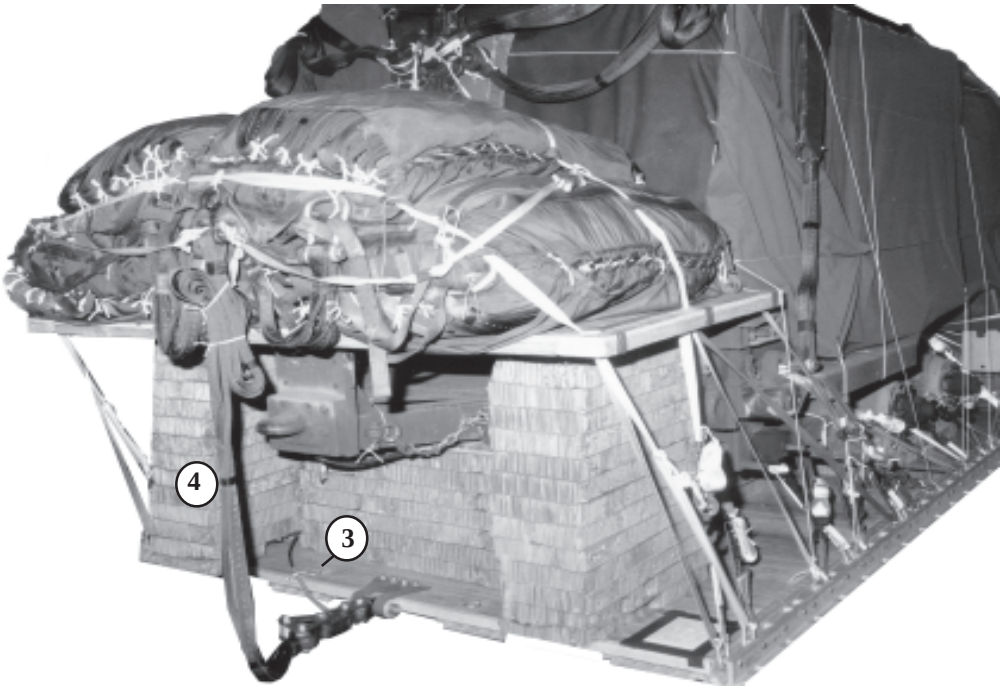


(3) Safety cable to tiedown ring C10 with type I, 1/4-inch cotton webbing.

(4) Use a 9- foot (2-loop), type XXVI nylon sling as a deployment line.

*Figure 3-35. Extraction system installed (continued)*

## 3-13. Installing Provisions for Emergency Restraints

Select and install provisions for the emergency aft restraints according to the emergency aft restraints requirements table in FM 10-500-2/TO 13C7-1-5.

## 3-14. Placing Extraction Parachutes

Select the extraction parachute and extraction line needed using the extraction line requirements table in FM 10-500-2/TO 13C7-1-5. Place the line on the load for installation in the aircraft.

## 3-15. Marking Rigged Load

Mark the rigged load according to FM 10-500-2/TO 13C7-1-5 and as shown in Figure 3-36. Complete Shipper's Declaration For Dangerous Goods form. If the load varies from the one shown, the weight, height, CB tip off curve, and parachute requirements must be recomputed.

## 3-16. Equipment Required

The equipment required to rig this load is listed in Table 3-1.

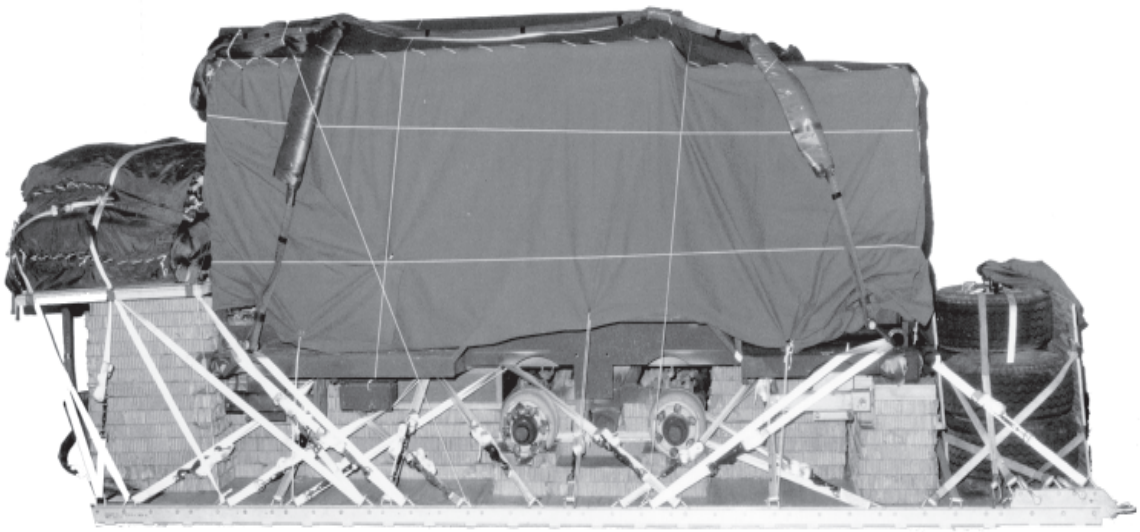

RIGGED LOAD DATA

WEIGHT.....21,780 pounds

MAXIMUM WEIGHT..... 23,030 pounds

HEIGHT.....101 inches

WIDTH.....108 inches

LENGTH.....275 inches

OVERHANG.....Front 5 inches
Rear 35 inches

CENTER OF BALANCE.....From the front edge of the platform: 130 inches

*Figure 3-36. ROWPU rigged for low-velocity airdrop on a type V platform*

**Table 3-1. Equipment required for rigging the ROWPU for low-velocity airdrop on a type V platform**

| National Stock Number | Item | Quanity |
|---|---|---|
| 1670-00-162-4979 | Adapter, link assembly | 1 |
| 8040-00-273-8713 | Adhesive, paste, 1-gal | As required |
| 4030-00-090-5354 | Clevis assembly, suspension, large | 6 |
| 8305-00-242-3593 | Cloth, cotton duck, 60-inch | 6 yd |
| 4020-00-240-2146 | Cord, nylon, type III, 550-lb | As required |
| 1670-00-434-5787 | Coupling, airdrop, extraction force transfer w 20-ft cable | 1 |
| 1670-00-783-5988 | Link assembly, type IV | 15 |
| 8135-00-664-6958 | Cushioning material, packaging, cellulose wadding | As required |
| 8305-00-958-3685 | Felt, 1/2- inch thick | As required |
| 1670-01-183-2678 | Leaf, extraction line (line bag) | 2 |
| | Line, extraction | |
| 1670-01-062-6313 | 60-ft (3-loop), type XXVI nylon webbing (C130) | 1 |
| 1670-01-107-7651 | 140-ft (3-loop), type XXVI nylon webbing (C141) | 1 |
| | Lumber, 2-inch: | |
| 5510-00-220-6146 | 4- by 14-in | 2 |
| | 4- by 18-in | 6 |
| | 4- by 58-in | 4 |
| 5510-00-220-6148 | 6- by 26-in | 1 |
| | 6- by 48-in | 2 |
| | 6- by 84-in | 3 |
| 5510-00-220-6246 | 8- by 26-in | 2 |
| | 8- by 48-in | 2 |
| 5315-00-010-4657 | Nail, steel wire, common, 6d | As required |
| 1670-00-753-3928 | Pad, energy-dissipating, honeycomb | |
| | 3- by 96-in: | 16 sheets |
| | 6- by 12-in | 8 |
| | 6- by 26-in | 1 |
| | 8- by 13-in | 6 |
| | 8- by 16-in | 3 |
| | 10- by 12-in | 8 |
| | 10- by 13-in | 1 |
| | 12- by 52-in | 2 |
| | 13- by 34-in | 28 |
| | 18- by 24-in | 1 |
| | 18- by 96-in | 7 |

**Table 3-1. Equipment required for rigging the ROWPU for low-velocity airdrop on a type V platform (cont)**

| National Stock Number | Item | Quanity |
|---|---|---|
| | 19- by 34-in | 2 |
| | 12- by 24-in | 2 |
| | 24- by 52-in | 4 |
| | 34- by 48-in | 8 |
| | 36- by 48-in | 4 |
| | 48- by 58-in | 2 |
| | 48- by 88-in | 5 |
| | Parachutes | |
| 1670-00-040-8135 | Cargo extraction, 28-ft, heavy duty | 1 |
| 1670-01-016-7841 | Cargo, G-11 | 5 |
| | Platform, AD, type V, 20-ft: | 1 |
| | Bracket: | |
| 1670-01-162-2372 | clevis, load tiedown | 46 |
| 1670-01-353-8425 | extraction bracket assembly | 1 |
| | coupling | 1 |
| 1670-01-162-2381 | tandem link | 2 |
| 1670-01-162-2385 | nose bumper | 1 |
| 5530-00-128-4981 | Plywood, 3/4-in | |
| | 12- by 23-in | 8 |
| | 12- by 52-in | 2 |
| | 18- by 96-in | 2 |
| | 19- by 34-in | 2 |
| | 30- by 48-in | 2 |
| | 36- by 48-in | 2 |
| | 48- by 58-in | 2 |
| | 48- by 58-in | 2 |
| | 48- by 96-in | 1 |
| 1670-01-097-8817 | Release. cargo parachute, M-2 (modified) | 1 |
| | Sling, cargo, airdrop: | |
| | For deployment: | |
| 1670-01-062-6311 | 9-ft (2-loop), type XXVI nylon webbing | 1 |
| | For suspension: | |
| 1670-01-062-6308 | 16-ft (4-loop), type XXVI nylon webbing | 4 |
| 1670-00-062-6302 | For riser extension: | |
| | 20-ft (2-loop), type XXVI nylon webbing | 20 |
| 1670-01-062-6301 | 3-ft, (2-loop) | 2 |
| 1670-00-836-2231 | Strap, parachute release, multicut, comes with 3 knives | 2 |

**Table 3-1. Equipment required for rigging the ROWPU for low-velocity airdrop on a type V platform (cont)**

| National Stock Number | Item | Quanity |
|---|---|---|
| 7510-00-266-5016 | Tape, adhesive, 2-in | As required |
| 1670-00-266-5016 | Tiedown assembly, 15-ft | 46 |
| | Webbing: | |
| 8305-00-268-2411 | Cotton, 80-lb | As required |
| 8305-00-082-5752 | Nylon, tublar, 1/2-in | As required |
| 8305-00-261-8584 | Nylon, type VIII | As required |

## REFERENCES

These documents must be available to the intended users of this publication.

*AFJMAN 24-204/TM 38-250. Packaging and Materials Handling: Hazardous Material for Military Air Shipments. 01 March 1997.

FM 10-500-2/TO 13C7-1-5. Airdrop of Supplies and Equipment: Rigging Airdrop Platforms. 01 November 1990.

TM 10-1670-208-20&P/TO 13C3-4-12. Organizational Maintenance Manual Including Repair Parts and Special Tools List for Platforms, Type II Modular and LAPES/Airdrop Modular. 10 August 1978.

AFTO Form 22. Technical Order Publication Improvement Report. April 1973.

DA Form 2028. Recommended Changes to Publications and Blank Forms. April 1973.

**Shipper's Declaration for Dangerous Goods. Locally Procured Form.

---

*AFJMAN 24-204/TM 38-250 has superseded AFJMAN 24-204 (25 November 1994). Change 1 reflects this change. The basic manual still references the susperseded publication. You may wish to make pen and ink changes to update the old reference citation accordingly.

**Shipper's Declaration for Dangerous Goods has superseded DD Form 1387-2 (February 1982). Change 1 reflects this change. The basic manual still references the susperseded publication. You may wish to make pen and ink changes to update the old reference citation accordingly.

**PIN: 061812-001**