FM 10-450-4
MCRP 4-23E, VOL II
NWP 3-04.12

AFJMAN 11-223, VOL II
COMDTINST M13482.3A

# MULTISERVICE HELICOPTER SLING LOAD:

# SINGLE-POINT LOAD RIGGING PROCEDURES

**DISTRIBUTION RESTRICTION:** APPROVED FOR PUBLIC RELEASE; DISTRIBUTION IS UNLIMITED

**HEADQUARTERS**
**DEPARTMENT OF THE ARMY**
**UNITED STATES MARINE CORPS**
**DEPARTMENT OF THE NAVY**
**DEPARTMENT OF THE AIR FORCE**
**UNITED STATES COAST GUARD**

HEADQUARTERS
DEPARTMENT OF THE ARMY
UNITED STATES MARINE CORPS
DEPARTMENT OF THE NAVY
DEPARTMENT OF THE AIR FORCE
UNITED STATES COAST GUARD
Washington, DC, 1 April 2002

Change 2

# MULTISERVICE HELICOPTER SLING LOAD: SINGLE-POINT RIGGING PROCEDURES

1. This change adds several items that are certified for sling load in the single-point configuration.

2. The United States Marine Corps has changed the Short Title of this manual to MCRP 4-11.3E, Vol II. This Short Title will be included in the next revision of this manual.

3. Change FM 10-450-4, 30 May 1998, as follows:

| **Remove old pages** | **Insert new pages** |
|---|---|
| iii through xi | iii through xi |
| 1-1 through 1-5 | 1-1 through 1-5 |
| 2-1 and 2-2 | 2-1 and 2-2 |
| 2-9 through 2-12 | 2-9 through 2-12 |
| 2-15 and 2-16 | 2-15 and 2-16 |
| 2-23 and 2-24 | 2-23 and 2-24 |
| 2-41 through 2-44 | 2-41 through 2-44 |
| 2-61 and 2-62 | 2-61 and 2-62 |
| | 2-65 through 2-83 |
| 3-1 and 3-2 | 3-1 and 3-2 |
| 3-35 and 3-36 | 3-35 and 3-36 |
| | 3-53 through 3-60 |
| 4-13 and 4-14 | 4-13 and 4-14 |
| 6-17 and 6-18 | 6-17 through 6-18.3 |
| 11-17 and 11-18 | 11-17 and 11-18 |
| Glossary-1 and Glossary-2 | Glossary-1 and Glossary-2 |

4. New or changed material is identified by a vertical bar in the margin opposite the changed material.

5. File this transmittal sheet in the front of the publication.

**DISTRIBUTION RESTRICTION:** Approved for public release; distribution is unlimited.

**C2, FM 10-450-5**
**MCRP 4-23, VOL III**
**NWP 3-04.13**
**AFJMAN 11-223, VOL III**
**COMDINST M13482.4A**
**1 APRIL 2002**

By Order of the Secretary of the Army:

ERIC K. SHINSEKI
*General, United States Army*
*Chief of Staff*

Official:

JOEL B. HUDSON
*Administrative Assistant to the*
*Secretary of the Army*
0209502

**DISTRIBUTION:**

*Active Army, Army National Guard, and U.S. Army Reserve*: To be distributed in accordance with the initial distribution number 114649, requirements for FM 10-450-5.

**This publication is available on the General Dennis J. Reimer Training and Doctrine Digital Library at www.adtdl.army.mil**

HEADQUARTERS
DEPARTMENT OF THE ARMY
UNITED STATES MARINE CORPS
DEPARTMENT OF THE NAVY
DEPARTMENT OF THE AIR FORCE
UNITED STATES COAST GUARD
Washington, DC, 1 February 2000

Change 1

# MULTISERVICE HELICOPTER SLING LOAD: SINGLE-POINT RIGGING PROCEDURES

1. In this change the name US Army Natick Research, Development, and Engineering Center has been replaced with US Army Soldiers System Center.

2. Change FM 10-450-4, 30 May 1998, as follows:

| **Remove old pages** | **Insert new pages** |
|---|---|
| iii through x | iii through xi |
| 2-1 and 2-2 | 2-1 and 2-2 |
| 2-21 through 2-26 | 2-21 through 2-26 |
| | 2-47 through 2-64 |
| 3-1 through 3-4 | 3-1 through 3-4 |
| | 3-41 through 3-52 |
| 5-1 through 5-7 | 5-1 through 5-7 |
| 6-13 through 6-18 | 6-13 through 6-18 |
| 8-1 and 8-2 | 8-1 and 8-2 |
| 8-77 and 8-78 | 8-77 through 8-82 |
| 11-1 and 11-2 | 11-1 and 11-2 |
| 11-5 through 11-8 | 11-5 through 11-8 |
| | 11-15 through 11-20 |
| 12-1 and 12-2 | 12-1 and 12-2 |
| | 12-23 and 12-24 |
| Appendix A | Appendix A |
| Glossary-1 and Glossary-2 | Glossary-1 and Glossary-2 |
| References-1 | References-1 |

3. New or changed material is identified by a vertical bar in the margin opposite the changed material.

4. File this transmittal sheet in the front of the publication.

**DISTRIBUTION RESTRICTION:** Approved for public release; distribution is unlimited.

**C1, FM 10-450-4**
**MCRP 4-23E, VOL II**
**NWP 3-04.12**
**AFJMAN 11-223, VOL II**
**COMDTINST M13482.3A**
**1 FEBRUARY 2000**

By Order of the Secretary of the Army:

ERIC K. SHINSEKI
*General, United States Army*
*Chief of Staff*

Official:

JOEL B. HUDSON
*Administrative Assistant to the*
*Secretary of the Army*
9916607

**DISTRIBUTION:**

*Active Army, Army National Guard, and U. S. Army Reserve*: To be distributed in accordance with the initial distribution number 114616, requirements for FM 10-450-4.

FIELD MANUAL 10-450-4
MARINE CORPS REFERENCE PUBLICATION 4-23E, VOL II
NAVAL WARFARE PUBLICATION 3-04.12
AIR FORCE JOINT MANUAL 11-223, VOL II
COMMANDANT INSTRUCTIONS M13482.2A

HEADQUARTERS
DEPARTMENT OF THE ARMY
UNITED STATES MARINE CORPS
DEPARTMENT OF THE NAVY
DEPARTMENT OF THE AIR FORCE
UNITED STATES COAST GUARD
30 May 1998, Washington, DC,

# MULTISERVICE HELICOPTER SLING LOAD: SINGLE-POINT RIGGING PROCEDURES

## PREFACE

This manual is one of a series of manuals for aviation and ground personnel who perform helicopter sling load missions ashore or aboard ship. Other manuals in this series are FM 10-450-3/MCRP 4-23E, VOL I/NWP 3-04.11/ AFJMAN 11-223, VOL I/COMDTINST M13482.2A and FM 55-450-5/FMFRP 5-31, VOL III/NWP 42-1,VOL III/ AFR 50-16, VOL III/COMDTINST M13482.4.

These manuals are a coordinated effort of the US Army, US Marine Corps, US Navy, US Air Force, and US Coast Guard. All services participate in the sling load certification program begun by the Army in 1984. These manuals include standardized rigging procedures and other information from that program. Chapters 2 through 14 contain rigging procedures for single-point loads which have been certified for sling load. Chapters 15 through 24 contain rigging procedures which have not been certified but have demonstrated acceptable static lift and flight characteristics during a flight test.

Efforts were made to standardize ground crew and hookup procedures and terminology. Where service-unique requirements apply to an entire chapter or body of text, the service initials are at the beginning of the chapter or text. Otherwise the initials are at the end of the applicable sentence.

Rigging equipment and procedures described in this manual may not be authorized for all aircraft or services because of equipment or service restrictions.

**DISTRIBUTION RESTRICTION:** Approved for public release; distribution is unlimited.

*This publication supersedes FM 55-450-4, 11 February 1991.

MARINE CORPS PCN: 14400003900

The proponent of this publication is HQ TRADOC. Recommendations for changes or improvement to the manual are requested.

Army personnel submit DA Form 2028 (Recommended Changes to Publications and Blank Forms) to:

Aerial Delivery and Field Services Department
USA Quartermaster Center and School
ATTN: ADMMO
1010 Shop Road
Fort Lee, VA 23801-1502

Navy personnel submit recommended changes to:

Chief of Naval Operations
Code OP 506
Washington, DC 20350-2000

Marine Corps personnel submit user suggestion form to:

Commanding General
Marine Corps Combat Development Command
Doctrine Division C42
Quantico, VA 22134-5021

With a copy to:

Commanding General
Marine Corps Systems Command (PSE)
Quantico, VA 22134-5021

Air Force personnel submit AF Form 847 (Recommendation for Change of Publication) to:

HQ AFSOC/DOXT
Hurlburt Field, FL 32544-5273

Coast Guard personnel submit rapidraft letter (CG-3883) or AF Form 847 to:

Commandant (G-OAV)
US Coast Guard
2100 2nd Street SW
Washington, DC 20593

With a copy to:

Commander
Aviation Training Center (TRADIV)
Mobile, AL 36117

# TABLE OF CONTENTS


| | | Paragraph | Page |
|---|---|---|---|
| **PREFACE** | | | i |
| **CHAPTER 1** | **FUNDAMENTAL PRINCIPLES** | | |
| | Introduction | 1-1 | 1-1 |
| | Classification Definitions of Sling Loads | 1-2 | 1-1 |
| | Certification of Equipment for Helicopter Sling Load | 1-3 | 1-1 |
| | Requests for Sling Load Certification | 1-4 | 1-2 |
| | Unique Items of Equipment or Operational Requirements | 1-5 | 1-2 |
| | Equipment Rigging Procedures | 1-6 | 1-2 |
| | General Rigging Instructions | 1-7 | 1-3 |
| **CHAPTER 2** | **CERTIFIED SINGLE-POINT RIGGING PROCEDURES FOR WHEELED VEHICLES** | | |
| | Introduction | 2-1 | 2-1 |
| | M996/M997/M997A2 Truck, Ambulance, (HMMWV) | 2-2 | 2-1 |
| | M996/M1036/M1045/M1045A2/M1046 TOW Missile Carrier (HMMWV), M1025/M1025A2/M1026/M1043/M1043A2/M1044 Armament Carrier (HMMWV) | 2-3 | 2-4 |
| | M998/M1037 Modified (GVW 9,400 lbs)/M1038/M1097/M1097A2 Truck, Cargo,1 1/4-ton (HMMWV) | 2-4 | 2-7 |
| | M1037/M1042/M1097/M1097A1/M1097A2 Shelter Carrier (HMMWV) Without Shelter | 2-5 | 2-10 |
| | M1037/M1042 Shelter Carrier (HMMWV) With S-250 or S-250E Shelter | 2-6 | 2-12 |
| | M1097 Shelter Carrier, Heavy HMMWV, With S-250 or S-250E Shelter | 2-7 | 2-15 |
| | M1037 Shelter Carrier (Heavy HMMWV) with Downsized Direct Support Section (DDSS) Shelter | 2-8 | 2-18 |
| | M1037 Shelter Carrier (HMMWV) With S-318 Shelter | 2-9 | 2-20 |
| | M1097/M1097A2 Shelter Carrier (HMMWV) With Lightweight Multipurpose Shelter (LMS) | 2-10 | 2-22 |
| | M1037/M1042 Shelter Carrier (HMMWV) With Lightweight Multipurpose Shelter (LMS) | 2-11 | 2-26 |
| | M1037/M1097 Shelter Carrier (HMMWV) With G15840 Smoke Generator Set, M157/M157A1E1 | 2-12 | 2-28 |
| | M998 (HMMWV) With Two MRC-127 Stacks | 2-13 | 2-30 |
| | M998/M1038 (HMMWV) With Lightweight Tactical Fire Control Systems (LTACFIRE)/Tactical Terminal Control System (TTCS) | 2-14 | 2-32 |
| | M1037 (HMMWV) With AN/TPQ-36 Firefinder Generator Pallet | 2-15 | 2-34 |
| | M1097 (H-HMMWV) With Antenna AS-3036/TSC on OA-9134/TSC Pallet Group | 2-16 | 2-36 |

| | Paragraph | Page |
|---|---|---|
| M1097 (H-HMMWV) With High Mobility Digital Group Multiplexer (DGM) Auxiliary Equipment Transportation Container (AETC) in 2 and 3 Mast Configurations | 2-17 | 2-38 |
| M1097 (H-HMMWV) With Fiberglass Cargo Bed Cover (CBC) | 2-18 | 2-41 |
| Light Armored Vehicle (LAV) (USMC) | 2-19 | 2-44 |
| M1097 (H-HMMWV) With AN/TPQ-42, Meteorological Hydrogen Generator (MHG) | 2-20 | 2-46 |
| M1097/M1113 Shelter Carrier (HMMWV) With Gitchner Model 1497A Shelter | 2-21 | 2-48 |
| M1097 (HMMWV) With Contact Maintenance Truck, Heavy (CMTH) | 2-22 | 2-51 |
| M1097 (HMMWV) With Enhanced Fiber Optic Guided Missile (EFOGM) Launcher | 2-23 | 2-53 |
| M1097 (HMMWV) With Sentinel AN/MPQ-64 Tactical Quiet Generator (TQG) | 2-24 | 2-55 |
| M1097A2 (HMMWV) With Secure Mobile Anti-Jam Tactical Terminal (SMART-T) Pallet | 2-25 | 2-57 |
| M1097A1 (HMMWV) With Remote Landing Site Tower (RLST) | 2-26 | 2-59 |
| M1113 (HMMWV) With M56 Smoke Generating System | 2-27 | 2-61 |
| M1097A2 (HMMWV) Soft Top Truck With Advanced Field Artillery Tactical Data Systems (AFATADS) | 2-28 | 2-63 |
| M1113 Truck, Utility, Expanded Capacity (HMMWV), With Lightweight Multipurpose Shelter (LMS) | 2-29 | 2-65 |
| M1097A2 Shelter Carrier (HMMWV) With Special Operations Media System (SOMS-B) in S-788G Shelter (LMS) | 2-30 | 2-68 |
| M1037 (HMMWV) With Compressed Air-Foam System, Mobile (CAFSM) | 2-31 | 2-71 |
| Prophet AN/MLQ-40 (V) on M1097 HMMWV | 2-32 | 2-73 |
| Helmit Hardtop (Amtech Corp) Cargo Bed Cover on M1097A2 HMMWV | 2-33 | 2-75 |
| Interim Fast Attack Vehicle (IFAV) Truck, Long Wheel Base | 2-34 | 2-77 |
| John Deere M-Gator (Model # VGM6X01001) | 2-35 | 2-79 |
| Two John Deere M-Gators, Model # VGM6X01001, Side by Side (Shotgun Method) | 2-36 | 2-81 |

**CHAPTER 3 CERTIFIED SINGLE-POINT RIGGING PROCEDURES FOR TRAILERS**

| | | |
|---|---|---|
| Introduction | 3-1 | 3-1 |
| M416 1/4-Ton Trailer | 3-2 | 3-1 |
| M101A2/A3 3/4-Ton Trailer | 3-3 | 3-3 |
| M1048/M1073 Trailer | 3-4 | 3-5 |
| M1048 Trailer with Tracked Suspension System (TSS) | 3-5 | 3-7 |
| M149A2 Water Trailer (USMC) | 3-6 | 3-9 |
| M989 Heavy-Expanded Mobility Ammunition Trailer (HEMAT) | 3-7 | 3-11 |
| M989A1 Heavy-Expanded Mobility Ammunition Trailer (HEMAT II) | 3-8 | 3-13 |
| Mk14, Trailer, Container Hauler | 3-9 | 3-15 |
| Mk15, Trailer, Wrecker/Recovery | 3-10 | 3-17 |
| Mk16, Trailer, Fifth-Wheel Adapter | 3-11 | 3-19 |
| Mk17, Trailer, Drop-Side, Cargo | 3-12 | 3-21 |

| | Paragraph | Page |
|---|---|---|
| M116A2 Trailer with Antenna Groups, AS-3954/TRC (2 each) (USMC) | 3-13 | 3-23 |
| M116A2 Trailer with AN/TPQ-36 Firefinder Antenna Transceiver Group (ATG) | 3-14 | 3-25 |
| M116A2 Trailer with M894 18,000-BTU Air Conditioner and MEP-003A Generator | 3-15 | 3-27 |
| MKT-90 Field Kitchen Trailer | 3-16 | 3-29 |
| Hydraulic System Test and Repair Unit (HSTRU) | 3-17 | 3-31 |
| M116A2 Trailer, Single Channel Objective Tactical Terminal (SCOTT) | 3-18 | 3-33 |
| High Mobility Trailers (HMT), M1101/M1102 | 3-19 | 3-35 |
| M116A3 Trailer with OE334 Antenna Coupler Group | 3-20 | 3-37 |
| Desert Operation Trailer (DOT) with Desert Operation Motorcycle (DOM) | 3-21 | 3-39 |
| HMT Trailer With Sentinel AN/MPQ-64 Antenna Transmitter Group (ATG) | 3-22 | 3-41 |
| HMT Trailer With Remote Landing Site Tower (RLST) | 3-23 | 3-43 |
| M105A3 Trailer | 3-24 | 3-45 |
| M332 Ammunition Trailer, 1 1/2-Ton | 3-25 | 3-47 |
| AS-4492/TSC, Lightweight, High Gain, X-band, Antenna (LHGXA) Trailer | 3-26 | 3-49 |
| XM1112 400 Gallon Water Trailer | 3-27 | 3-51 |
| M1082 Light Medium Tactical Vehicle (LMTV) and M1095 Medium Tactical Vehicle (MTV) Trailers | 3-28 | 3-53 |
| Small Portable Expeditionary Aeromedical Rapid Response (SPEARR) Trailer | 3-29 | 3-55 |
| Minimum Operating Strip Lighting System (MOSLS) | 3-30 | 3-57 |
| Assault Command Post With High Mobility Wheel Set | 3-31 | 3-59 |

**CHAPTER 4 CERTIFIED SINGLE-POINT RIGGING PROCEDURES FOR TRAILERS WITH MOUNTED GENERATORS**

| | | |
|---|---|---|
| Introduction | 4-1 | 4-1 |
| M353 Trailer Chassis With Mounted Generators | 4-2 | 4-1 |
| M200A1 Trailer-Mounted Power Units, Generators, and Power Plants | 4-3 | 4-3 |
| M103A3 Trailer-Mounted Power Units, Generators, and Power Plants | 4-4 | 4-7 |
| M103A3/A4 Trailer-Mounted Power Units, Generators, and Power Plants | 4-5 | 4-9 |
| M116A2 Trailer-Mounted Power Units, Generators, and Power Plants | 4-6 | 4-11 |
| M116A3 Trailer-Mounted Power Units, Generators, and Power Plants | 4-7 | 4-13 |
| High Mobility Trailer (HMT) with AN/TJQ-35A Power Plant | 4-8 | 4-15 |
| High Mobility Trailer (HMT) with Tactical Quiet Generator Power Units | 4-9 | 4-17 |
| High Mobility Trailers (HMT) with Generator for Joint Surveillance Target Attack Radar (JSTAR) System | 4-10 | 4-19 |

**CHAPTER 5 CERTIFIED SINGLE-POINT RIGGING PROCEDURES FOR TRUCK AND TOWED COMBINATIONS**

| | | |
|---|---|---|
| Introduction | 5-1 | 5-1 |

| | | Paragraph | Page |
|---|---|---|---|
| | M973/M973E1/M1065/M1066 Small Unit Support Vehicle (SUSV) | 5-2 | 5-1 |
| | M1067 Flatbed Small Unit Support Vehicle (SUSV) | 5-3 | 5-5 |
| **CHAPTER 6** | **CERTIFIED SINGLE-POINT RIGGING PROCEDURES FOR HOWITZERS AND WEAPONS SYSTEMS** | | |
| | Introduction | 6-1 | 6-1 |
| | M101A1 105-MM Howitzer with or without A-22 Cargo Bags | 6-2 | 6-1 |
| | M102 105-MM Howitzer | 6-3 | 6-4 |
| | M102 105-MM Howitzer with One A-22 Cargo Bag | 6-4 | 6-6 |
| | M102 105-MM Howitzer with Two or Three A-22 Cargo Bags | 6-5 | 6-8 |
| | Two M102 105-MM Howitzers | 6-6 | 6-10 |
| | Two M102 105-MM Howitzers with One, Two, or Three A-22 Cargo Bags | 6-7 | 6-12 |
| | M119 105-MM Howitzer, Folded/Towed Position | 6-8 | 6-14 |
| | M119 105-MM Howitzer, Forward/Firing Position | 6-9 | 6-16 |
| | M114A2 155-MM Howitzer, Towed | 6-10 | 6-19 |
| | M119 105-MM Howitzer, Forward Firing Position, Platform Down with Additional Boxes of Ammunition | 6-9.1 | 6-18.1 |
| | M198 155-MM Howitzer, Towed/Stowed | 6-11 | 6-21 |
| | Two M101A1 155-MM Howitzers | 6-12 | 6-23 |
| | M167 20-MM AA Gun (Vulcan) with or without One A-22 Cargo Bag | 6-13 | 6-26 |
| | BMS-120 Battalion Mortar System | 6-14 | 6-28 |
| **CHAPTER 7** | **CERTIFIED SINGLE-POINT RIGGING PROCEDURES FOR GUIDED MISSILE SYSTEMS** | | |
| | Introduction | 7-1 | 7-1 |
| | M54A1/M54A2 Chaparral Launch Station | 7-2 | 7-1 |
| | M85 Towed Chaparral Missile System | 7-3 | 7-3 |
| | Continuous Wave Acquisition Radar (CWAR) | 7-4 | 7-5 |
| | M192E1/M192-1 Zero Length Launcher | 7-5 | 7-7 |
| | M501E3 Loader-Transporter, Guided Missile | 7-6 | 7-9 |
| | M1E2 Loading and Storage Missile Pallet | 7-7 | 7-11 |
| | Pedestal-Mounted Stinger (Avenger) | 7-8 | 7-13 |
| **CHAPTER 8** | **CERTIFIED SINGLE-POINT RIGGING PROCEDURES FOR ENGINEER EQUIPMENT** | | |
| | Introduction | 8-1 | 8-1 |
| | T-3 Tractor, Crawler | 8-2 | 8-1 |
| | D5B Tractor, Dozer | 8-3 | 8-3 |
| | Tractor, Full-Tracked, MC 1150E | 8-4 | 8-5 |
| | Tractor, Wheeled, Industrial, Case Model 580 | 8-5 | 8-7 |
| | Small Emplacement Excavator (SEE) | 8-6 | 8-9 |
| | High Mobility Materiel Handler (HMMH) | 8-7 | 8-11 |
| | Ditching Machine | 8-8 | 8-13 |
| | 950BS Scoop Loader | 8-9 | 8-15 |

| | Paragraph | Page |
|---|---|---|
| 130GS Grader | 8-10 | 8-19 |
| 613BS Scraper, Elevating | 8-11 | 8-21 |
| 613WDS Water Distributor | 8-12 | 8-24 |
| Roller, Towed, Vibrating | 8-13 | 8-27 |
| Mk155 Launcher, Mine Clearing | 8-14 | 8-29 |
| M68A2 Line Charge, Demolition with or without Mk22 Rocket Motor | 8-15 | 8-31 |
| Mk155 Launcher with or without M68A2 Demolition Line Charge and Mk22 Rocket Motor on M353 Trailer | 8-16 | 8-33 |
| Mk155 Launcher with or without M68A2 Demolition Line Charge and Mk22 Rocket Motor on M200A1 or Mobile-Trac System (MTS) Trailer | 8-17 | 8-35 |
| LRT-110, 7 1/2-Ton Crane | 8-18 | 8-37 |
| LRT-110, 7 1/2-Ton Crane (Boom) | 8-19 | 8-39 |
| LRT-110, 7 1/2-Ton Crane (Power Unit) | 8-20 | 8-41 |
| Truck, Forklift, MC-4000 | 8-21 | 8-43 |
| Truck, Forklift, RT4000 | 8-22 | 8-45 |
| MHE-270/MHE-271 Truck, Forklift, RT4000 | 8-23 | 8-47 |
| Truck, Forklift, MC-6000 | 8-24 | 8-49 |
| Extendable Boom Forklift (EBFL) | 8-25 | 8-51 |
| Welding Shop on M200A1 Trailer | 8-26 | 8-53 |
| 250 CFM Air Compressor | 8-27 | 8-55 |
| Pneumatic Tool and Compressor Outfit/Hydraulic Pioneer Tool Outfit (PTO) on M353 Trailer | 8-28 | 8-57 |
| Fuel Dispensing System, Tactical Airfield (TAFDS) | 8-29 | 8-59 |
| Bath Unit Mounted on the M103 Trailer | 8-30 | 8-61 |
| Boat, Bridge Erection | 8-31 | 8-63 |
| Bridge, Medium Girder, Dry Gap (MGB) | 8-32 | 8-65 |
| Ribbon Bridge Ramp Bay | 8-33 | 8-67 |
| Ribbon Bridge Interior Bay | 8-34 | 8-69 |
| Water Purification Unit-Reverse Osmosis (ROWPU) | 8-35 | 8-71 |
| MS114 WFD Concrete Mixer | 8-36 | 8-73 |
| Towed Rollers | 8-37 | 8-75 |
| Tractor (Dozer), Full-Tracked, Type III, JD450G | 8-38 | 8-77 |
| Vibrating Roller, Caterpillar, RO-33 | 8-39 | 8-79 |
| Countermine Miniflail | 8-40 | 8-81 |

**CHAPTER 9 CERTIFIED SINGLE-POINT RIGGING PROCEDURES FOR LIQUID CONTAINERS**

| | | |
|---|---|---|
| Introduction | 9-1 | 9-1 |
| Lightweight Collapsible Fabric Tank | 9-2 | 9-1 |
| One to Four 500-Gallon Fuel Drums | 9-3 | 9-3 |
| Six 500-Gallon Fuel Drums, Empty | 9-4 | 9-6 |
| Storage Module, Fuel/Water, Six Compartment Container (SIXCON), Individual | 9-5 | 9-8 |
| Two Storage Modules, Fuel/Water, Six Compartment Container (SIXCON), (Stacked) | 9-6 | 9-10 |

| | | Paragraph | Page |
|---|---|---|---|
| **CHAPTER 10** | **CERTIFIED SINGLE-POINT RIGGING PROCEDURES FOR SHELTERS** | | |
| | Introduction | 10-1 | 10-1 |
| | AN/ASM-146 or AN/MSM-108 Electronic Shops | 10-2 | 10-1 |
| | Communications or Electronic Systems Housed in S-250 Shelters | 10-3 | 10-3 |
| | Communications or Electronic Systems Housed in Lightweight Multipurpose Shelter (LMS) | 10-4 | 10-5 |
| | Communications or Electronic Systems Housed in S-280 Shelters | 10-5 | 10-7 |
| | 8- x 8- x 10-Foot Shelter Systems | 10-6 | 10-10 |
| | Downsized Digital Group Multiplexer (DDGM) Shelter Assemblages | 10-7 | 10-12 |
| | AN/TYC-5A Data Communications Terminal | 10-8 | 10-14 |
| | AN/TRN-44 Tactical Air Navigation Shelter | 10-9 | 10-16 |
| | Hardened Army Tactical Shelter (HATS) | 10-10 | 10-18 |
| | Cradle Mounted AN/TPQ-32A Radar Set, Component of the AN/MPQ-49A Forward Area Alerting Radar (FAAR) System. | 10-11 | 10-20 |
| | NATO Air Base Satcom (NABS) Shelter Pallet, AN/TSC-93B (V) 2 | 10-12 | 10-22 |
| | Refrigerator, Rigid Box without Refrigerator Unit | 10-13 | 10-24 |
| **CHAPTER 11** | **CERTIFIED SINGLE-POINT RIGGING PROCEDURES FOR CONTAINERS** | | |
| | Introduction | 11-1 | 11-1 |
| | Pershing II in Container | 11-2 | 11-1 |
| | Shipping/Storage Containers | 11-3 | 11-3 |
| | Army Missile Systems Enclosure Assembly Launch Pods (EALP), One Container | 11-4 | 11-5 |
| | Army Missile Systems Enclosure Assembly Launch Pods (EALP), Two Containers | 11-5 | 11-7 |
| | M1A1 Full-Up Power Pack (FUPP) Container | 11-6 | 11-9 |
| | Field Medical Oxygen Generation/Distribution System (FMOGDS) | 11-7 | 11-11 |
| | Field Medical Oxygen Generation/Distribution System (FMOGDS) (Combined) | 11-8 | 11-13 |
| | Distributed Explosive Technology (DET) System, Array Container | 11-9 | 11-15 |
| | Distributed Explosive Technology (DET) System, Landing Craft, Air Cushioned (LCAC), Landing Interface Kit (LIK) Container, Single | 11-10 | 11-17 |
| | Distributed Explosive Technology (DET) System, Landing Craft, Air Cushioned (LCAC), Interface Kit (LIK) Container, Doubled, Stacked | 11-11 | 11-19 |
| **CHAPTER 12** | **CERTIFIED SINGLE-POINT RIGGING PROCEDURES FOR RADAR AND SATELLITE EQUIPMENT** | | |
| | Introduction | 12-1 | 12-1 |
| | AN/TPQ-37 Artillery-Loading Radar Set (Firefinder) | 12-2 | 12-1 |
| | AN/TMQ-31 Radio Direction Finder | 12-3 | 12-4 |
| | AN/TPQ-36 Firefinder Antenna Radar Set | 12-4 | 12-6 |
| | AN/TPQ-36 Firefinder II | 12-5 | 12-8 |
| | OE-361/G Quick Reaction Satellite Antenna | 12-6 | 12-11 |

| | | Paragraph | Page |
|---|---|---|---|
| | AS-3471/TPN-22 Antenna Pallet (USMC) | 12-7 | 12-13 |
| | Antenna Pallet Transit Frame | 12-8 | 12-15 |
| | Digital Group Multiplexer (DGM), Digital Antenna Mast Program (DAMP), 2 and 3 Antenna Pallet Configurations | 12-9 | 12-17 |
| | Digital Group Multiplexer (DGM), Auxiliary Equipment Transportation Container (AETC), 2 and 3 Mast Configurations | 12-10 | 12-19 |
| | Lightweight Generator Frame Assembly (AN/TSC-93B Reconfiguration) Satellite Communications Terminal | 12-11 | 12-21 |
| | Secure Mobile Anti-Jam Tactical Terminal (SMART-T) Pallet | 12-12 | 12-23 |
| **CHAPTER 13** | **CERTIFIED SINGLE-POINT RIGGING PROCEDURES FOR GENERATOR SETS** | | |
| | Introduction | 13-1 | 13-1 |
| | Aviation Ground Power Unit (AGPU) | 13-2 | 13-1 |
| | Aviation Direct Current Generator Set (ADCGS) | 13-3 | 13-4 |
| | Skid Mounted Generators | 13-4 | 13-6 |
| | MEP112A Generator Pallet | 13-5 | 13-8 |
| | NATO Air Base Satcom (NABS) Power Pallet AN/TSC-85 (V) 2 | 13-6 | 13-10 |
| | Skid Mounted Tactical Quiet Generator Sets | 13-7 | 13-12 |
| **CHAPTER 14** | **CERTIFIED SINGLE-POINT RIGGING PROCEDURES FOR MISCELLANEOUS EQUIPMENT** | | |
| | Introduction | 14-1 | 14-1 |
| | Forward Area Refueling Equipment (FARE) | 14-2 | 14-1 |
| | Fire Extinguisher, Dry Chemical | 14-3 | 14-3 |
| | Rigid Raiding Craft | 14-4 | 14-5 |
| | 2.75-inch Rocket Fastpack Pallet | 14-5 | 14-7 |
| | Special Divers Air Support System (SDASS) | 14-6 | 14-9 |
| | Two Mobile Oversnow Transport (MOST) Snowmobiles with or without Two Sleds | 14-7 | 14-11 |
| **CHAPTER 15** | **SUITABLE SINGLE-POINT RIGGING PROCEDURES FOR WHEELED VEHICLES** | | |
| | Introduction | 15-1 | 15-1 |
| | M342A2 2 1/2-Ton Dump Truck with Winch | 15-2 | 15-1 |
| | M35A1/2 2 1/2-Ton Cargo Truck with Winch | 15-3 | 15-3 |
| | M54A2 5-Ton Cargo Truck with Winch | 15-4 | 15-5 |
| | M52A2 or M818 5-Ton Tractor with Winch | 15-5 | 15-7 |
| | Crane, Self-Propelled, for Army Aircraft Maintenance and Positioning (SCAMP) | 15-6 | 15-9 |
| **CHAPTER 16** | **SUITABLE SINGLE-POINT RIGGING PROCEDURES FOR TRAILERS** | | |
| | Introduction | 16-1 | 16-1 |

| | | Paragraph | Page |
|---|---|---|---|
| | M105 1 1/2-Ton Trailer | 16-2 | 16-1 |
| | M270A1 Semitrailer, Wrecker | 16-3 | 16-3 |
| | M172A1 Semitrailer, Lowbed | 16-4 | 16-5 |
| | Trailer, Flatbed, Tilt Deck, 15-Ton, 8-Wheel | 16-5 | 16-7 |
| | Trailer-Mounted Welding Shop | 16-6 | 16-9 |
| | LEB 300 Welding Machine on 2 1/2-Ton Trailer Chassis | 16-7 | 16-11 |
| | Trailer-Mounted Compressor, Reciprocating | 16-8 | 16-13 |
| | Trailer-Mounted AN/MTC-10 | 16-9 | 16-15 |
| | Trailer-Mounted Tool Outfit | 16-10 | 16-17 |
| | Trailer-Mounted, Lube, Service Unit | 16-11 | 16-19 |
| | Trailer, Bolster, M796 | 16-12 | 16-21 |
| | M149 Series Water Trailers | 16-13 | 16-23 |
| **CHAPTER 17** | **SUITABLE SINGLE-POINT RIGGING PROCEDURES FOR HOWITZERS** | | |
| | Introduction | 17-1 | 17-1 |
| | M114A1 155-MM Howitzer with or without Accompanying Load | 17-2 | 17-1 |
| **CHAPTER 18** | **SUITABLE SINGLE-POINT RIGGING PROCEDURES FOR ENGINEER EQUIPMENT** | | |
| | Introduction | 18-1 | 18-1 |
| | MRS-100 Wheeled Industrial Tractor | 18-2 | 18-1 |
| | M5 8-Foot Aggregate Spreader | 18-3 | 18-3 |
| | Roller, Towed, Vibrating, 1-Drum, 5-Ton, VRS55TM | 18-4 | 18-5 |
| | Roller, Road, Towed, Wheeled, 13-Tire, 9-Ton | 18-5 | 18-7 |
| | Tar Kettles | 18-6 | 18-9 |
| | 16SM Concrete Mixer | 18-7 | 18-11 |
| | Road Sweeper, Towed | 18-8 | 18-13 |
| | Sheepsfoot Roller, Two-Drum, MD-96 | 18-9 | 18-15 |
| | Model 1150 Full Tracked Tractor | 18-10 | 18-17 |
| | M4K 4000-Pound Forklift | 18-11 | 18-20 |
| | Floodlight Set, Trailer-Mounted | 18-12 | 18-22 |
| **CHAPTER 19** | **SUITABLE SINGLE-POINT RIGGING PROCEDURES FOR LIQUID CONTAINERS** | | |
| | Introduction | 19-1 | 19-1 |
| | Tank, Fabric, Collapsible, 10,000-Gallon | 19-2 | 19-1 |
| | 60,000-Gallon Fuel System Supply Point | 19-3 | 19-3 |
| | One to Six 250-Gallon Water Drums | 19-4 | 19-5 |
| **CHAPTER 20** | **SUITABLE SINGLE-POINT RIGGING PROCEDURES FOR SHELTERS** | | |
| | Introduction | 20-1 | 20-1 |
| | Tool Set Aviation Maintenance, SE 1, Airmobile | 20-2 | 20-1 |

| | | Paragraph | Page |
|---|---|---|---|
| | Shop, Portable, Aircraft Maintenance (SPAM) | 20-3 | 20-3 |
| **CHAPTER 21** | **SUITABLE SINGLE-POINT RIGGING PROCEDURES FOR CONTAINERS** | | |
| | Introduction | 21-1 | 21-1 |
| | One CONEX Container | 21-2 | 21-1 |
| | Two CONEX Containers | 21-3 | 21-3 |
| **CHAPTER 22** | **SUITABLE SINGLE-POINT RIGGING PROCEDURES FOR RADAR EQUIPMENT** | | |
| | Introduction | 22-1 | 22-1 |
| | AN/MPQ-4A Radar Set | 22-2 | 22-1 |
| **CHAPTER 23** | **SUITABLE SINGLE-POINT RIGGING PROCEDURES FOR GENERATOR SETS** | | |
| | Introduction | 23-1 | 23-1 |
| | Trailer Mounted Generators | 23-2 | 23-1 |
| | 7.5KW Generator Set | 23-3 | 23-3 |
| **CHAPTER 24** | **SUITABLE SINGLE-POINT RIGGING PROCEDURES FOR MISCELLANEOUS EQUIPMENT** | | |
| | Introduction | 24-1 | 24-1 |
| | Company Level Field Feeding Kit | 24-2 | 24-1 |
| | 350-GPM Pump Assembly | 24-3 | 24-4 |
| | Light Tactical Floating Raft Bridge | 24-4 | 24-6 |
| | Medium-Span Bridge | 24-5 | 24-11 |
| | M4T6 Bridge | 24-6 | 24-13 |
| **APPENDIX A.** | **NATIONAL STOCK NUMBERS FOR SLINGS, NETS, AND SPARE PARTS** | | **A-1** |
| **APPENDIX B.** | **SLING CONVERSION CHART** | | **B-1** |
| **GLOSSARY** | | | Glossary-1 |
| **REFERENCES** | | | References-1 |

# CHAPTER 1

# FUNDAMENTAL PRINCIPLES

## 1-1. INTRODUCTION

This chapter contains general information about certification for helicopter sling load and explains the role of the Military Traffic Management Command Transportation Engineering Agency (MTMCTEA) and the Department of Defense (DOD) sling load certification authority. This authority rests with the US Army Soldier Systems Center (SSC). This chapter also explains the information contained in the equipment rigging procedures and gives some general rigging instructions.

## 1-2. CLASSIFICATION DEFINITIONS OF SLING LOADS

**a. Certified Sling Loads.** Certified sling loads are those items of equipment and their associated rigging procedures which have completed the evaluation and testing required by SSC for sling load certification. These rigging procedures are in Chapters 2 through 14. Only certified sling loads are authorized for the Marine Corps. The US Army SSC has indicated that any single point sling load certified under a specific aircraft is also certified for any aircraft with suitable lift capability. The following restrictions apply for sling load certification to remain in effect:

**(1)** The load must be within the lifting capability of the desired helicopter model and not exceed the rated capacity of the sling set being used.

**(2)** The load shall be rigged in accordance with the certified rigging procedure.

**(3)** The recommended stable airspeed specified for the load in the applicability section of the rigging procedure is a recommendation and not a restriction, unless so stated.

**(4)** This certification is limited to single-point loads only.

**NOTE: When carrying loads at weights close to the aircraft hook limitations, close coordination with the aviation unit is required.**

**CAUTION**

**Loads weighing less than 6,000 pounds may not fly in a stable condition and may incur jettisoning problems when flown under a CH-53E helicopter. CH-53E units may have restrictions on flying light loads. Direct coordination with CH-53E units is encouraged.**

**b. Suitable Sling Loads.** Suitable sling loads are those items of equipment and their associated rigging procedures that have not been certified but have demonstrated acceptable static lift and flight characteristics during a flight test. In most cases these loads were not pull tested in accordance with MIL STD 913, but are known loads which have been flown without incident for years and which SSC considers to be proven safe. These rigging procedures are in Chapters 15 through 24.

**c. Unique Sling Loads.** Unique loads are equipment carried on a one time or low-frequency basis, such as telephone poles, artillery targets, or barrier material. The lack of sling load certification in itself does not preclude a unit commander from carrying a load that is not certified. Each service is responsible for determining its policy on carrying loads that have not been certified for sling load.

**d. Prohibited Sling Loads.** Prohibited sling loads are items of equipment that are prohibited from sling loading as determined by each service. These loads have been denied sling load certification and are a safety hazard if carried. They have either structural deficiencies or have exhibited unstable flight characteristics during flight testing. Each service will identify these loads and transmit this information by separate list. Contact your service point of contact identified in the Preface if you have any questions regarding the classification of a particular load.

## 1-3. CERTIFICATION OF EQUIPMENT FOR HELICOPTER SLING LOAD

**a. Objective.** The objective of helicopter sling load certification is to assure the user that the equipment being transported can withstand the stresses of a sling load

flight environment. Certification for sling load assures the user that the item has met minimum standards for structural integrity and that the associated rigging procedures have been developed specifically for that item.

**b. Responsibilities.** Within the US Army, the MTMCTEA is responsible for transportability approval of developmental equipment. Within the DOD, SSC is the lead activity responsible for providing sling load certification and rigging procedures for military equipment. When an item is certified for sling load, it means that SSC, in cooperation with various test activities, has:

**(1)** Conducted an engineering analysis of the load and lifting provisions for structural adequacy during sling loading.

**(2)** Verified that the lift provisions meet the strength requirements of the applicable military standard by means of proof load testing.

**(3)** Developed and/or validated sling load rigging procedures through static lift testing.

**(4)** Evaluated flight reports and determined that the particular load meets acceptable flight characteristics with the type helicopter flown during the flight test.

**(5)** Issued a statement of sling load certification for the particular load, including load configuration(s), weight(s), types of helicopter(s), and recommended airspeed(s) as attained during the flight evaluation(s). Certification is valid only for the conditions specified in the rigging procedures.

## 1-4. REQUESTS FOR SLING LOAD CERTIFICATION

**a. Fielded Equipment.** Each service headquarters must designate, request, and prioritize the fielded equipment to be evaluated by SSC for sling load certification. Individual units can request sling load certification for fielded equipment through the appropriate service agency which will add the item to the prioritized list. The SSC will evaluate the equipment on a priority basis. The following agencies are responsible for their branch of service:

**(1)** US Army - Commander, Combined Arms Support Command, ATTN: QM Combat Developments, Suite 250, 3901 A Avenue, Fort Lee, VA 23801-1809.

**(2)** US Marine Corps - Commanding General, Marine Corps System Command (PSE) Quantico, VA 22134-5021.

**(3)** US Navy - Naval Air Systems Command (NAVAIR).

**(4)** US Air Force - US Air Force Systems Command.

**b. Previously Certified Dual-Point Loads.** Loads cannot be certified for dual-point lift based on previously certified dual-point rigging procedures because of the differences in dual hook helicopters, such as the distance between the two cargo hooks. Rigging procedures for dual-point loads must be developed and/or approved by SSC before the test flight.

## 1-5. UNIQUE ITEMS OF EQUIPMENT OR OPERATIONAL REQUIREMENTS

Helicopter sling loading of unique items, due to operational requirements, will be at the discretion of the commander. Equipment not listed in this manual should be static lifted (when possible) by a crane to determine proper rigging and stability characteristics. Personnel thoroughly familiar with sling load rigging procedures should assist in the static lift testing. Flight evaluating may be conducted after a satisfactory static rigging configuration has been determined.

**NOTE: Low density equipment with low weight and large surface area (flat surfaces), such as shelters, empty trailers, pallet loads, boat shaped items, and empty fuel or water drums, are likely to become extremely unstable when flown during sling load operations, even at low airspeeds, and should be flown with extreme caution.**

## 1-6. EQUIPMENT RIGGING PROCEDURES

This section explains the information that is contained in the rigging procedures for each load. Chapters 2 through 14 contain the rigging procedures for certified single-point loads and chapters 15 through 24 contain the rigging procedures for suitable single-point loads.

**a. Applicability Paragraph.** The applicability paragraph states whether a load is “certified” or “suitable” for sling

load. It also contains the helicopter types and recommended airspeeds for each helicopter type.

For certified loads, this airspeed is the maximum airspeed attained by the helicopter during the evaluation flight before the load became unstable or before the aircraft power requirements were exceeded. For suitable loads, the maximum recommended airspeed is based on previous experience with this helicopter/load combination. **For either certified or suitable loads, the airspeed listed is a recommendation and not a restriction, unless so stated. The aircrew should closely monitor the load during the flight, especially if the helicopter exceeds the recommended airspeed.**

**b. Load Description.** The load description paragraph identifies the load, model, national stock number (NSN) or other identification, and the weight of the load for certification.

**(1)** The actual weight of the equipment may vary somewhat from the actual rigged weight during the flight evaluation due to equipment modifications, fuel, equipment added to the load, or different models of the same item. The load weight on the equipment data plate or in the operator's manual takes precedence over the load weight in this manual. Weigh the load if there is any doubt about its actual weight. If the load weight exceeds the weight listed in the load description paragraph, the load becomes a unique load. Contact your service point of contact if you have any questions about the load description or weight.

**(2)** Equipment such as cargo trailers and cargo trucks contain descriptions of the allowable additional cargo weight. Do not exceed the fully loaded weight. Some trailers become extremely unstable at low weights; therefore, a minimum weight is identified. If your trailer is below that weight, add more cargo or dummy weight as close to the center of the trailer as possible until you reach the minimum weight.

**c. Preparation.** The preparation steps are intended to reduce the possibility of damage to the equipment caused by sling leg entanglement during the hookup and lift-off operation or by wind resistance encountered during the flight. Since these preparation steps are not directive in nature, the commander assumes responsibility for any damage to the equipment caused by deviation from the preparation steps.

**d. Rigging.** The rigging steps give information as to the position of the apex fitting on the load, routing orientation of the sling legs, location of the lift provisions, chain link number for each sling leg, and steps required to prevent the sling legs from becoming entangled on the load. Do not change the chain link number in the rigging procedures under any circumstances as it may change sling leg loading and cause lift provision failure.

**(1)** The purpose of the illustration accompanying the rigging procedures is to depict what a properly rigged load looks like with the slack removed from the sling legs. The arrow identifies the direction of flight.

**(2)** Appendix A contains NSN component listings for slings, sling sets, cargo nets, and other miscellaneous equipment and materials.

**e. Hookup.** Certain sling loads, such as HMMWVs with shelters, present substanial risk of damage to the load or injury to the hookup personnel. This risk is increased during dual point hookup or night operations.

**(1)** To reduce the risk of damage to the load or injury to the hookup personnel an extended sling system or reach pendant as defined in FM 10-450-3 may be used.

**(2)** Using a reach pendant increases the distance between the load and the helicopter. Reach pendants should not be used on loads that have a tendancy to spin during flight. A static discharge person is not required when using a reach pendant.

**(3)** If the tactical environment permits the use of an extended sling set may reduce the risk. Polyester round slings are recommended for use as vertical pendants.

## 1-7. GENERAL RIGGING INSTRUCTIONS

**CAUTION**

**Inspect lifting provisions and supporting structure for damage or degradation prior to sling loading. Do not transport loads with damaged or degraded lift provisions.**

**a. Preparing the Load.** Prepare the load to be transported by following the preparation and rigging instructions for each item. Typical preparation instructions will

provide information to secure loose items, remove or secure canvas covers, and remove obstructions, such as antennas. Place protective padding on windshields and other components that could be damaged by the metal parts of the sling set during hookup or release. The load should be secure enough to withstand winds in excess of 120 knots caused by the forward airspeed of the aircraft. If possible, position the load in the takeoff direction so the pilot does not have to pick the load up and then turn the aircraft into the takeoff direction.

**b. Preparing the Equipment.** Inspect and assemble the slings and miscellaneous equipment required to prepare and rig the load. Following the instructions in Chapter 6 of FM 10-450-3/MCRP 4-23E, VOL I/NWP 3-04.11/ AFJMAN 11-223, VOL I/COMDTINST M13482.2A, add or remove sling legs, chains, or apex fittings as required. Never exceed the capacity of the sling legs or apex fitting/ web ring. If you have a sling set with a higher capacity than the sling set prescribed, use the chain link conversion chart in Appendix B to determine the corresponding chain link for your sling set.

**c. Positioning and Attaching the Sling Set.** Position the sling set near the load. The sling legs for a typical load with four lifting points are routed as shown in Figure 1-1.

**(1)** Rigging a typical load with four lifting points is begun by connecting -

**(a)** Sling leg 1 to the left front lifting provision.

**(b)** Sling leg 2 to the right front lifting provision.

**(c)** Sling leg 3 to the left rear lifting provision.

**(d)** Sling leg 4 to the right rear lifting provision.

**(2)** If a six-leg sling set is required, the innermost sling legs, 5 and 6, are connected to the left and right middle lift provisions.

**NOTE: Odd numbered sling legs go to the same side of the load.**

**(3)** Following the equipment rigging procedures, loop the free end of the chain end through the lift provision and insert the specified chain link in the grabhook/grab link. Tie or tape the excess chain end to prevent the unrestrained chain from damaging the load. If necessary, wrap padding around the chain or rope assembly to prevent damage to the load or sling set. If the procedures prescribe a spreader bar, install and pad it according to the rigging instructions.

**(4)** Breakaway safety ties are used to temporarily restrain the sling legs to keep them from becoming entangled on the load as the helicopter lifts the load. These safety ties are made of Type I, 1/4-inch cotton webbing or duct tape.

**d. Viewing the Load.** Left, right, front, and rear directions are designated from the driver's perspective for vehicles and towed equipment. Howitzer gun tubes are considered the front of the load. The front or rear is identified on other items of equipment. The sling leg numbering system prevents sling legs from crossing each other and causing damage to the sling legs or causing the load to twist in flight. To improve flight stability, some loads are transported backwards. Do not confuse the front of the load as it is carried with the end designated as the front for rigging purposes. The arrow shown in the illustration identifies the direction of flight.

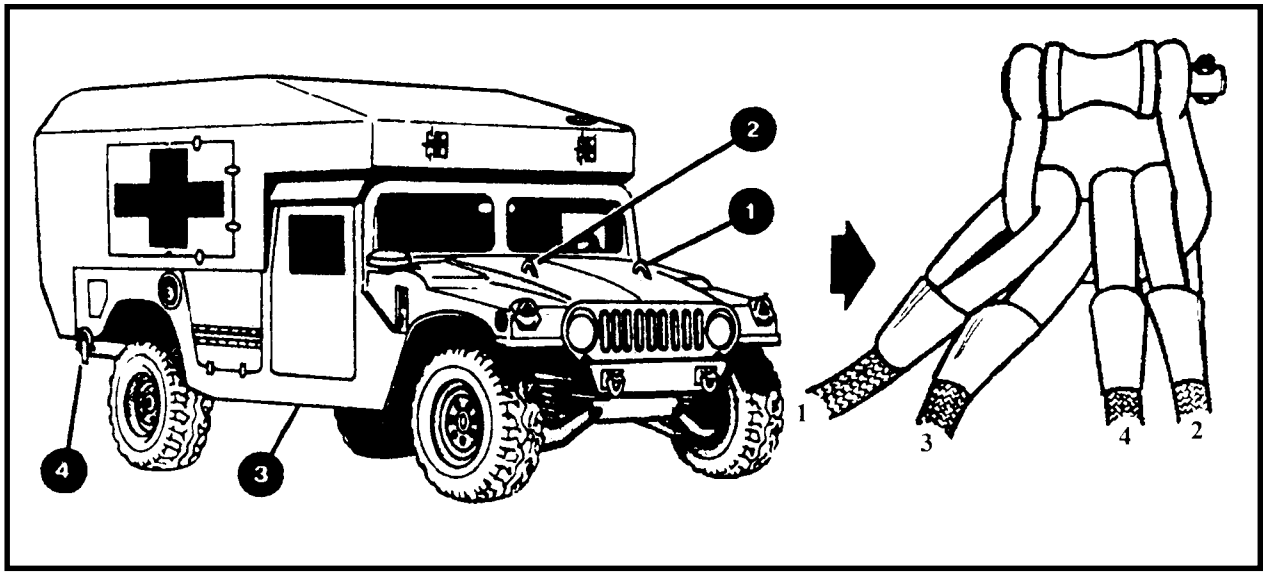


*Figure 1-1. Sling Leg Lifting Point Designation*

# CHAPTER 2

# CERTIFIED SINGLE-POINT RIGGING PROCEDURES FOR WHEELED VEHICLES

## 2-1. INTRODUCTION

This chapter contains rigging procedures for single-point wheeled vehicle loads that have been certified for sling load. Each rigging procedure is found in a paragraph that includes a description of the load, materials required for rigging, and steps to complete the procedure. An applicability paragraph is also a part of each paragraph and identifies the certified loads. The certified single-point rigging procedures for wheeled vehicles are in this section. Paragraphs 2-2 through 2-36 give detailed instructions for rigging loads.

**NOTES:**

**1. Reach Pendants may be used on all single point loads. A static discharge person is not required when using a Reach Pendant.**

**2. Canvas tops and doors should be removed and stowed inside the vehicle if time allows. These items may be damaged if the airspeed exceeds 100 knots.**

## 2-2. M996/M997/M997A2 Truck, Ambulance, (HMMWV)

**a. Applicability.** The following items in Table 2-1 are certified for all helicopters with suitable lift capacity by the US Army Soldier Systems Center:

**Table 2-1. Truck, Ambulance, (HMMWV)**

| NOMENCLATURE | MAX WEIGHT (POUNDS) | SLING SET | LINK COUNT FRONT/REAR | RECOMMENDED AIRSPEED (KNOTS) |
|---|---|---|---|---|
| Truck, Ambulance, M996, HMMWV | 7,400 | 10K | 80/30 | UH-60 / 60<br>CH-47 / 110 |
| Truck, Ambulance, M997, HMMWV | 7,400 | 10K | 80/30 | UH-60 / 80<br>CH-47 / 75 |
| Truck, Ambulance, M997A2, HMMWV | 10,300 | 25K | 65/24 | CH-47 / 75 |

**b. Materials.** The following materials are required to rig this load:

**(1)** Sling set (10,000-pound capacity).

**OR**

**(2)** Sling set (25,000-pound capacity).

**(3)** Tape, adhesive, pressure-sensitive, 2-inch wide roll.

**(4)** Cord, nylon, Type III, 550-pound breaking strength.

**(5)** Webbing, cotton, 1/4-inch, 80-pound breaking strength.

**(6)** Spreader bar assembly (component of vehicle).

**c. Personnel.** Two persons can prepare and rig this load in 15 minutes.

**d. Procedures.** The following procedures apply to this load:

**(1) Preparation.** Prepare the load using the following steps:

**(a)** Fold the mirrors forward in front of the windshield and tie together with Type III nylon cord. Tape the windshield in an X formation from corner to corner.

**(b)** Remove the spreader bar from under the right-hand seat inside the ambulance.

**(c)** Secure all equipment inside the rear compartment with tape, nylon cord, and/or lashings. Close and secure the door.

**(d)** Secure all other equipment inside the vehicle with tape, nylon cord, and/or lashings. Close and secure the doors.

**(e)** Make sure the fuel tank is not over 3/4 full. Inspect fuel tank cap, oil filler cap, and battery caps for proper installation.

**(f)** Engage the vehicle parking brake. Place the transmission in neutral.

**(g)** Make sure that the front wheels are pointed straight ahead. Tie down the steering wheel using the securing device attached under the dashboard.

**(h)** Secure the Red Cross insignia covers in the closed position.

**(i)** Remove the keeper from the spreader bar and extend the bar so the holes line up. Reinstall pin and engage keeper. Use the sighting hole in the tube to assist in aligning holes for the pin. See top view insert in Figure 2-1.

**(j)** Position the spreader bar across the rear end of the vehicle roof. Attach the spreader bar check cables to the eyebolts located on the aft exterior sidewall of the rear compartment. See rear view insert in Figure 2-1.

**(k)** Install lift provisions on the outer ends of the rear bumper by removing the tie-down provisions located inboard of the bumper ends and installing them on the outer ends of the rear bumper, if necessary.

**(2) Rigging.** Rig the load according to the steps in Figure 2-1.

**NOTE: Hookup of this load presents substantial risk of damage to the load or injury to the hookup personnel. Use of a reach pendant is recommended for this load.**

**(3) Hookup.** The hookup team stands on the roof of the vehicle. The static wand person discharges the static electricity with the static wand. The hookup person places the apex fitting onto the aircraft cargo hook. The hookup team then carefully dismounts the vehicle and remains close to the load as the helicopter removes slack from the sling legs. When successful hookup is assured, the hookup team quickly exits the area underneath the helicopter to the designated rendezvous point.

**(4) Derigging.** Derigging is the reverse of the preparation and rigging procedures in steps d (1) and d (2).

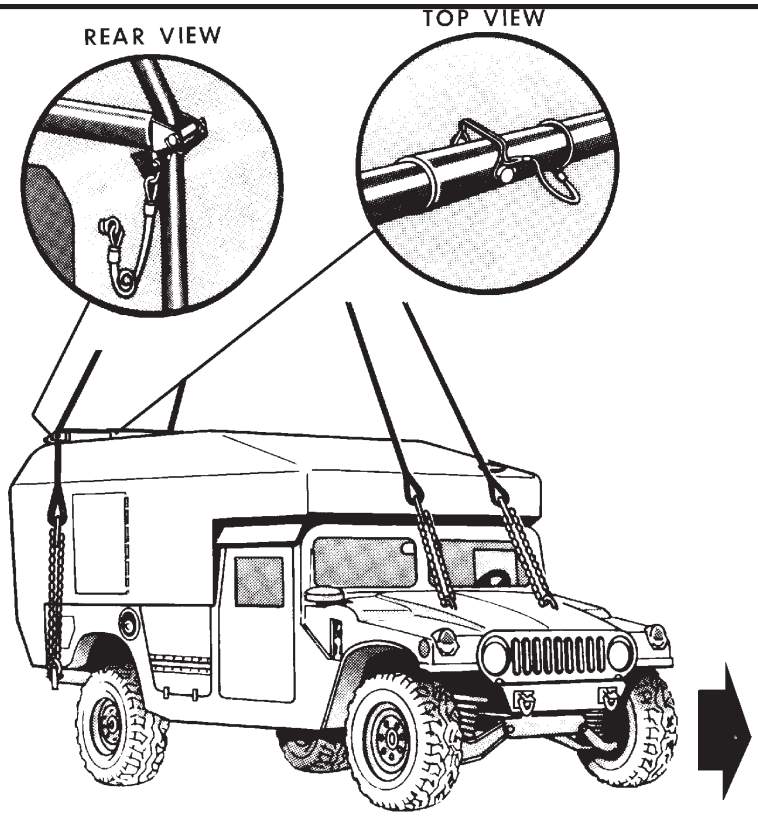


**RIGGING STEPS**

**1.** Position apex fitting on top of the ambulance. Route outer sling legs 1 and 2 to the front of the vehicle and inner sling legs 3 and 4 to the rear. Sling legs 1 and 3 must be on the left side of the load.

**2.** Loop the chain end of sling leg 1 through the left front lift provision that protrudes through the hood. Place the correct link from Table 2-1 in the grab hook. Repeat with sling leg 2 and the right front lift provision.

**3.** Place the nylon rope of sling legs 3 and 4 in the guides on the ends of the spreader bar. Attach the spreader bar guide retainer pins and keepers. Lay the spreader bar on the roof. Make sure the sling legs are in front of the check cable eyebolts.

**4.** The rear lift provisions are located on the outer ends of the rear bumper. Loop the chain end of sling leg 3 through the left rear lift provision. Place the correct link from Table 2-1 in the grab hook. Repeat with sling leg 4 and the right rear lift provision.

**5.** Secure all excess chain with tape or Type III nylon cord.

**6.** Cluster and tie or tape (breakaway technique) all sling legs together on top of the vehicle to prevent entanglement during hookup and lift-off.

***Figure 2-1. M996/M997/M997A2 Ambulance (HMMWV)***

**CAUTION**

**Do not use the lift shackles located near the center of the rear bumper for sling load lift provisions.**

## 2-3. M966/M1036/Ml045/M1045A2/M1046 TOW Missile Carrier (HMMWV) M1025/M1025A2/M1026/M1043/M1043A2/M1044 Armament Carrier (HMMWV)

**a. Applicability.** The following items in Table 2-2 are certified for all helicopters with suitable lift capacity by the US Army Natick Research, Development, and Engineering Center:

**Table 2-2. TOW Missile/Armament Carrier, (HMMWV)**

| NOMENCLATURE | MAX WEIGHT (POUNDS) | SLING SET | LINK COUNT FRONT/REAR | RECOMMENDED AIRSPEED (KNOTS) |
|---|---|---|---|---|
| TOW Missile Carrier, HMMWV, M966/M1036/M1045/M1046 | Varies by Model | 10K<br>15K<br>40K | 80/3<br>60/3<br>53/3 | CH-47 / 90<br>CH-53 See Note 1<br>UH-60 See Note 2 |
| TOW Missile Carrier, HMMWV, M1045A2 | 10,300 | 25K | 65/5 | CH-47 / 90<br>CH-53 See Note 1 |
| Armament Carrier, HMMWV, M1025/M1026/M1043/M1044 | Varies by Model | 10K<br>15K<br>40K | 80/3<br>60/3<br>53/3 | CH-47 / 90<br>CH-53 See Note 1<br>UH-60 See Note 2 |
| Armament Carrier, HMMWV, M1025A2/M1043A2 | 10,300 | 25K | 65/5 | CH-47 / 90<br>CH-53 See Note 1 |

**NOTES:**

**1. Recommended airspeed for CH-53E when using the 15,000-pound multileg sling set is 80 knots. Recommended airspeed for the CH-53E when using the 40,000-pound capacity sling set is 95 knots.**

**2. For vehicle weights up to 7,300 pounds, the recommended maximum airspeed for the UH-60 is 100 knots. For loads weighing above 7,300 pounds the recommended maximum airspeed is 70 knots. Coordinate closely with the aviation unit as to the vehicle weight including all gear carried on the vehicle.**

**b. Materials.** The following materials are required to rig this load:

**(1)** Sling set (10,000-pound capacity or 25,000-pound capacity).

**OR**

**(2)** Multileg sling set (15,000-pound capacity or 40,000-pound capacity).

**(3)** Tape, adhesive, pressure-sensitive, 2-inch wide roll.

**(4)** Cord, nylon, Type III, 550-pound breaking strength.

**(5)** Webbing, cotton, 1/4-inch, 80-pound breaking strength.

**(6)** Felt sheet, cattle hair, Type IV, 1/2-inch or suitable padding.

**c. Personnel.** Two persons can prepare and rig this load in 15 minutes.

**d. Procedures.** The following procedures apply to this load:

**(1) Preparation.** Prepare the load using the following steps:

**(a)** Fold mirrors forward in front of the windshield for added protection and tie together with Type III nylon cord. If installed, remove canvas covering over the bed of the truck. Remove the doors. Tape the windshield in an X formation from corner to corner. If time permits, fold canvas top and tie to windshield for added protection.

**(b)** Secure all equipment and cargo inside the vehicle with tape, nylon cord, or lashings. Remove antennas and stow inside vehicle.

**(c)** Ensure the fuel tank is not over 3/4 full. Inspect fuel tank cap, oil filler cap, and battery caps for proper installation.

**(d)** Engage the vehicle parking brake and put the transmission in neutral.

**(e)** Ensure the front wheels are pointed straight ahead. Tie down the steering wheel, using the securing device attached under the dashboard.

**(2) Rigging.** Rig the load according to the steps in Figure 2-2.

**(3) Hookup.** The hookup team stands on the roof of the vehicle. The static wand person discharges the static electricity with the static wand. The hookup person places the apex fitting onto the aircraft cargo hook. The hookup team then carefully dismounts the vehicle and remains close to the load as the helicopter removes slack from the sling legs. When successful hookup is assured, the hookup team quickly exits the area underneath the helicopter to the designated rendezvous point.

**(4) Derigging.** Derigging is the reverse of the preparation and rigging procedures in steps d (1) and d (2).

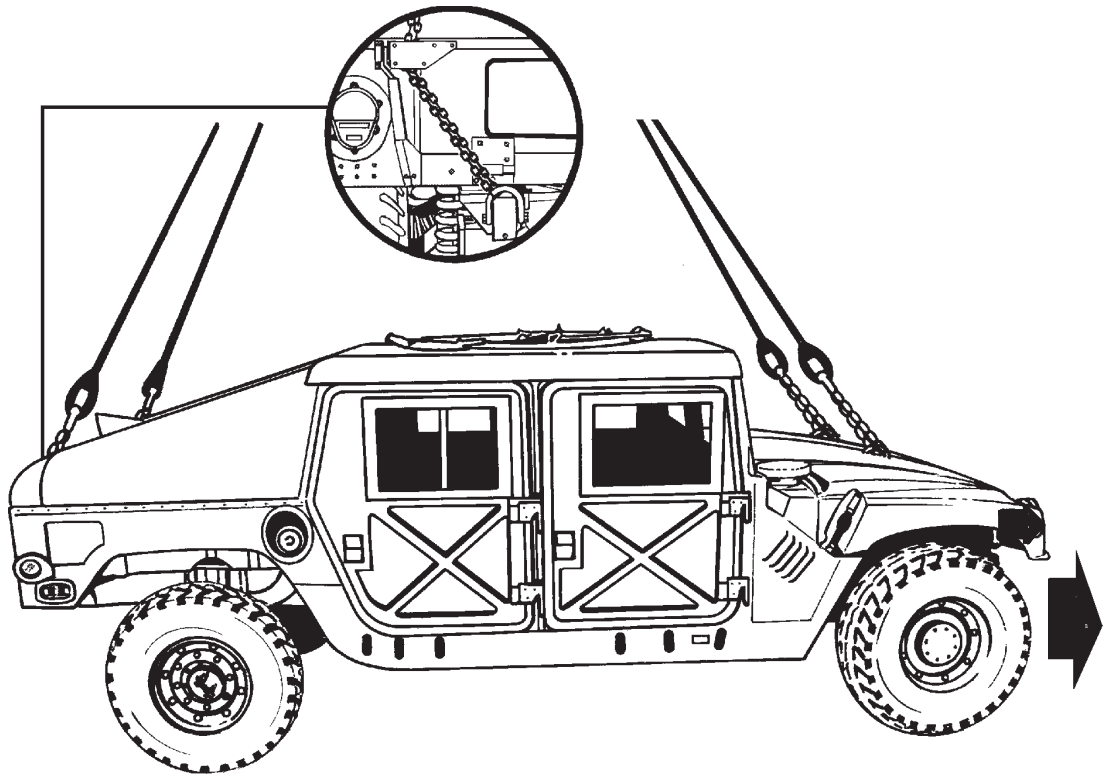

**RIGGING STEPS**

**1.** Position apex fitting on the roof of the vehicle. Route outer sling legs 1and 2 to the front of the vehicle and inner sling legs 3 and 4 to the rear. Sling legs 1 and 3 must be on the left side of the load.

**2.** Loop the chain end of sling leg 1 through the left front lift provision that protrudes through the hood. Place the correct link from Table 2-2 in the grab hook. Repeat with sling leg 2 and the right front lift provision. Secure excess chain with tape or Type III nylon cord.

**3.** Route the chain end of sling leg 3 through the eyelet opening in the upper left corner of the tailgate. Loop the chain end through the left lift provision on the bumper and thread back through the eyelet opening in the tailgate. Place the correct link from Table 2-2 in the grab hook. Repeat with sling leg 4 and the right rear lift provision. See insert above.

**4.** Wrap rear chains with padding where they contact the shell back.

**5.** Cluster and tie or tape (breakaway technique) all sling legs together on top of the vehicle to prevent entanglement during hookup and lift-off.

***Figure 2-2. TOW Missile Carrier (HMMWV)***

## 2-4. M998/M1037 Modified (GVW 9,400 lbs)/M1038/M1097/M1097A2 Truck, Cargo, 1 1/4-ton (HMMWV)

**a. Applicability.** The following items in Table 2-3 are certified for all helicopters with suitable lift capacity by the US Army Natick Research, Development, and Engineering Center:

**Table 2-3. 1 1/4-Ton Cargo Truck (HMMWV)**

| NOMENCLATURE | MAX WEIGHT (POUNDS) | SLING SET | LINK COUNT FRONT/REAR | RECOMMENDED AIRSPEED (KNOTS) |
|---|---|---|---|---|
| Truck, 1 1/4-ton, HMMWV, M998/M1038 | 7,700 | 10K<br>15K<br>40K | 80/3<br>60/3<br>53/3 | CH-47 / 90<br>CH-53 See Note 1<br>UH-60 See Note 2 |
| Truck, 1 1/4-ton, HMMWV, M998A1 | 7,500 | 10K | 80/3 | CH-47 / 90<br>CH-53 See Note 1<br>UH-60 See Note 2 |
| Truck, 1 1/4-ton, HMMWV, M998 with AN/MRC-110A Radio Set | 7,700 | 10K<br>15K<br>40K | 80/3<br>60/3<br>53/3 | CH-47 / 90<br>CH-53 See Note 1<br>UH-60 See Note 2 |
| Truck, 1 1/4-ton, HMMWV, Modified, (GVW 9,400 lbs), M1037 | 9,400 | 10K<br>15K | 80/3<br>60/3 | 90 |
| Truck, 1 1/4-ton, Heavy HMMWV, Cargo Variant, M1097 | 10,001 | 25K | 60/10 | 90 |
| Truck, 1 1/4-ton, Heavy HMMWV, Cargo Variant, M1097A2 | 10,300 | 25K | 60/10 | 90 |

**WARNING**

**THIS CARGO VEHICLE (M1037 MODIFIED, 9,400-LB GVW) SHOULD NOT BE CONFUSED WITH THE SHELTER CARRIER (M1037, 8,600-LB GVW). THE M1037 MODIFIED HAS IMPROVED LIFT PROVISIONS WHICH ALLOWS IT TO BE LIFTED AT HIGHER GROSS VEHICLE WEIGHTS.**

**NOTES:**

**1. Recommended airspeed for CH-53E when using the 15,000-pound multileg sling set is 100 knots. Recommended airspeed for the CH-53E when using the 40,000-pound capacity sling set is 105 knots.**

**2. For vehicle weights up to 7,300 pounds, the recommended maximum airspeed for the UH-60 is 100 knots. For loads weighing above 7,300 pounds the recommended maximum airspeed is 70 knots. Coordinate closely with the aviation unit as to the vehicle weight including all gear carried on the vehicle.**

**b. Materials.** The following materials are required to rig this load:

**(1)** Sling set (10,000-pound capacity or 25,000-pound capacity for the UH-60 and CH-47).

**OR**

**(2)** Multileg sling set (15,000-pound or capacity or 40,000-pound capacity for the CH-53E only).

**(3)** Tape, adhesive, pressure-sensitive, 2-inch wide roll.

**(4)** Cord, nylon, Type III, 550-pound breaking strength.

**(5)** Webbing, cotton, 1/4-inch, 80-pound breaking strength.

**(6)** Felt sheet, cattle hair, Type IV, 1/2-inch or suitable padding.

**c. Personnel.** Two persons can prepare and rig this load in 15 minutes.

**d. Procedures.** The following procedures apply to this load:

**(1) Preparation.** Prepare the load using the following steps:

**(a)** Fold mirrors forward in front of the windshield for added protection and tie together with Type III nylon cord. If installed, remove canvas covering over the bed of the truck. Remove the doors. Tape the windshield in an X formation from corner to corner. If time permits, fold canvas top and tie to windshield for added protection.

**(b)** Secure all equipment and cargo inside the vehicle with tape, nylon cord, or lashings. Remove antennas and stow inside vehicle.

**(c)** Ensure the fuel tank is not over 3/4 full. Inspect fuel tank cap, oil filler cap, and battery caps for proper installation.

**(d)** Engage the vehicle parking brake and put the transmission in neutral.

**(e)** Ensure the front wheels are pointed straight ahead. Tie down the steering wheel, using the securing device attached under the dashboard.

**(2) Rigging.** Rig the load according to the steps in Figure 2-3.

**(3) Hookup.** The hookup team stands in the bed of the vehicle. The static wand person discharges the static electricity with the static wand. The hookup person places the apex fitting onto the aircraft cargo hook. The hookup team then carefully dismounts the vehicle and remains close to the load as the helicopter removes slack from the sling legs. When successful hookup is assured, the hookup team quickly exits the area underneath the helicopter to the designated rendezvous point.

**(4) Derigging.** Derigging is the reverse of the preparation and rigging procedures in steps d (1) and d (2).

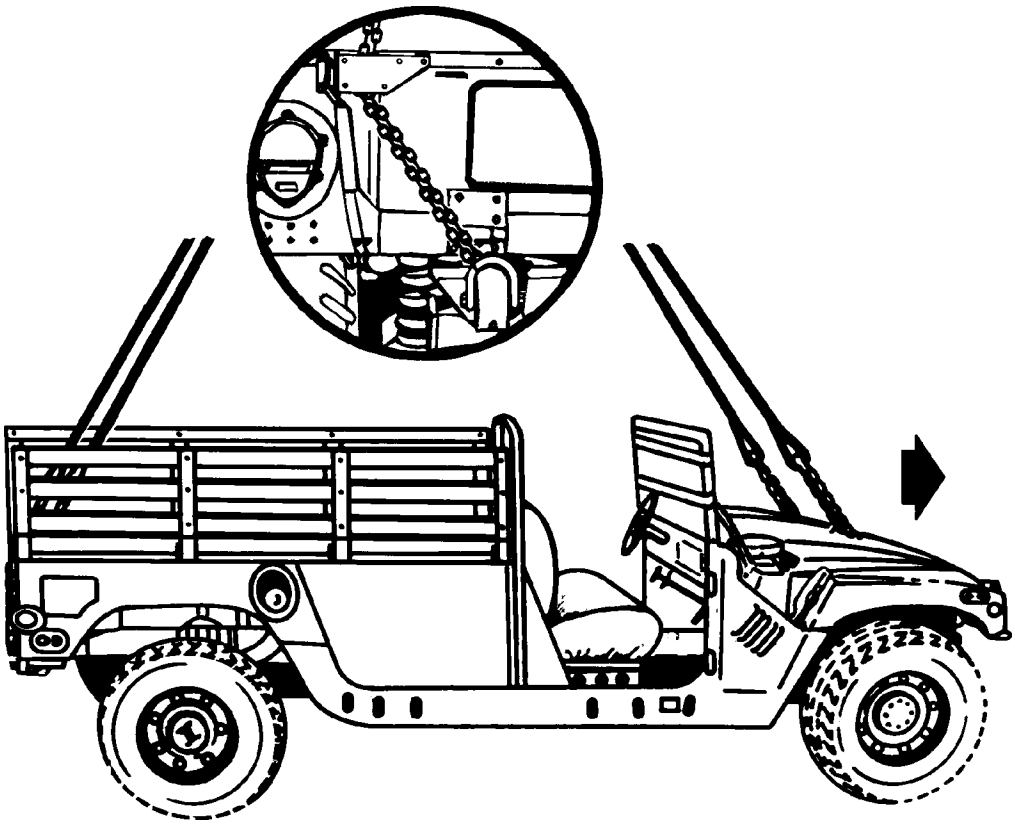

**RIGGING STEPS**

**1.** Position apex fitting in the bed of the vehicle. Route outer sling legs 1and 2 to the front of thevehicle and inner sling legs 3 and 4 to the rear. Sling legs 1 and 3 must be on the left side of the load.

**2.** Loop the chain end of sling leg 1 through the left front lift provision that protrudes through the hood from inboard to outboard. Place the correct link from Table 2-3 in the grab hook. Repeat with sling leg 2 through the right front lift provision. Secure excess chain with tape or Type III nylon cord.

**3.** Route the chain end of sling leg 3 through the eyelet opening in the upper left corner of the tailgate. Loop the chain end through the left lift provision on the bumper and thread back through the eyelet opening in the tailgate. Place the correct link from Table 2-3 in the grab hook. Repeat with sling leg 4 through the right rear lift provision. See insert above.

**4.** Cluster and tie or tape (breakaway technique) all sling legs together on top of the trailer to prevent entanglement during hookup and lift-off.

*Figure 2-3. 1 1/4-Ton Cargo Truck (HMMWV)*

## 2-5. M1037/M1042/M1097/M1097A1/M1097A2 Shelter Carrier (HMMWV) Without Shelter

**a. Applicability.** The following items in Table 2-4 are certified for all helicopters with suitable lift capacity by the US Army Soldier Systems Center:

**Table 2-4. M1037/M1042/M1097/M1097A1/M1097A2 Shelter Carrier (HMMWV) Without Shelter**

| NOMENCLATURE | MAX WEIGHT (POUNDS) | SLING SET | LINK COUNT FRONT/REAR | RECOMMENDED AIRSPEED (KNOTS) |
|---|---|---|---|---|
| Shelter Carriers, M1037/M1042 | 5,220 | 15K<br>10K | 60/3 | 100 |
| Shelter Carriers, M1097/M1097A1 | 10,000 | 10K | 60/3 | 100 |
| Shelter Carriers, M1097A2 | 10,300 | 25K | 50/3 | 100 |

**b. Materials.** The following materials are required to rig this load:

**(1)** Multileg sling set (15,000-pound capacity or 40,000-pound capacity for CH-53 only).

**OR**

**(2)** Sling set (10,000-pound capacity or 25,000-pound capacity for CH-60 and CH-47).

**(3)** Tape, adhesive, pressure-sensitive, 2-inch wide roll.

**(4)** Cord, nylon, Type III, 550-pound breaking strength.

**(5)** Webbing, cotton, 1/4-inch, 80-pound breaking strength.

**(6)** Felt sheet, cattle hair, Type VI, 1/2-inch or suitable substitute.

**c. Personnel.** Two persons can prepare and rig this load in 15 minutes.

**d. Procedures.** The following procedures apply to this load:

**(1) Preparation.** Prepare the load using the following steps:

**(a)** Fold mirrors forward in front of the windshield for added protection and tie together with Type III nylon cord. Tape the windshield in an X formation from corner to corner.

**(b)** Secure all equipment and cargo inside the vehicle with tape, nylon cord, or lashings. Secure the doors shut if installed.

**(c)** Ensure the fuel tank is not over 3/4 full. Inspect the fuel tank cap, oil filler cap, and battery caps for proper installation.

**(d)** Engage the vehicle parking brake and place the transmission in neutral.

**(e)** Ensure the front wheels are in pointed straight ahead. Tie down the steering wheel using the securing device attached under the dashboard.

**(f)** Install the lift provisions on the outer ends of the rear bumper by removing the tiedown provisions located inboard of the bumper end and installing them on the outer ends of the rear bumper.

**(2) Rigging.** Rig the load according to the steps in Figure 2-4.

**(3) Hookup.** The hookup team stands in the bed of the vehicle. The static wand person discharges the static electricity with the static wand. The hookup person places the apex fitting onto the aircraft cargo hook. The hookup team then carefully dismounts the vehicle and remains

close to the load as the helicopter removes slack from the sling legs. When successful hookup is assured, the hookup team quickly exits the area underneath the helicopter to the designated rendezvous point.

**(4) Derigging.** Derigging is the reverse of the preparation and rigging procedures in steps d (1) and d (2).

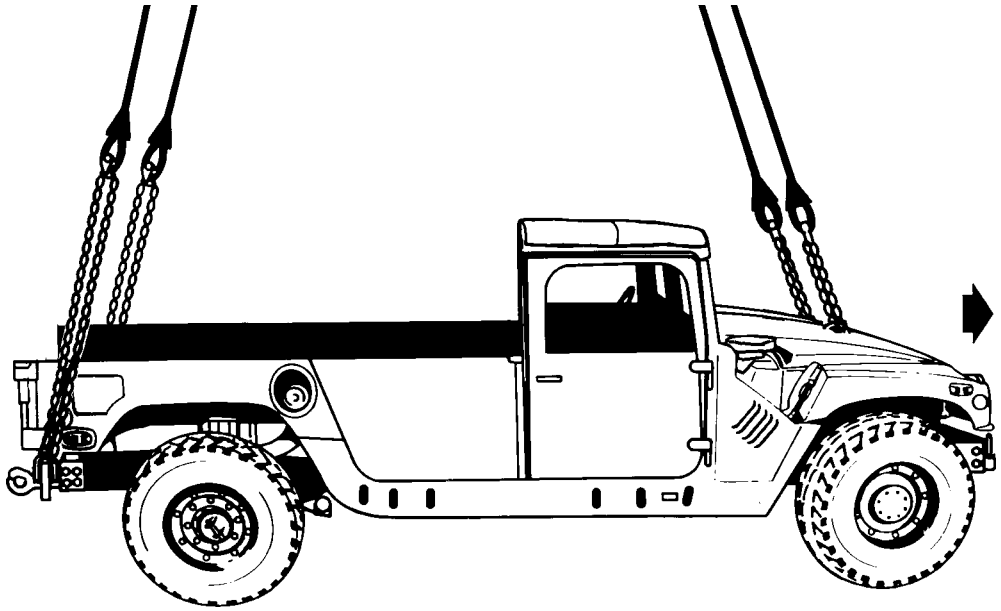

**RIGGING STEPS**

**1.** Position apex fitting in the bed of the vehicle. Route outer sling legs 1and 2 to the front of thevehicle and inner sling legs 3 and 4 to the rear. Sling legs 1 and 3 must be on the left side of the load.

**2.** Loop the chain end of sling leg 1 through the left front lift provision that protrudes through the hood from inboard to outboard. Place the correct link from Table 2-4 in the grab hook. Repeat with sling leg 2 through the right front lift provision. Secure excess chain with tape or Type III nylon cord.

**3.** Route the chain end of sling leg 3 through the lift provision located on the left end of the bumper from inboard to outboard. Place the correct link from Table 2-4 in the grab hook. Repeat with sling leg 4 through the right rear lift provision. Secure excess chain with tape or Type III nylon cord.

**4.** Wrap rear chains with padding where they contact the shelter carrier.

**5.** Cluster and tie or tape (breakaway technique) all sling legs together on top of the trailer to prevent entanglement during hookup and lift-off.

*Figure 2-4. M1037/M1042/M1097/M1097A1/M1097A2 Shelter Carrier (HMMWV) Without Shelter*

## 2-6. M1037/M1042 Shelter Carrier (HMMWV) With S-250 or S-250E Shelter

**a. Applicability.** The following items in Table 2-5 are certified for all helicopters with suitable lift capacity by the US Army Natick Research, Development, and Engineering Center:

**Table 2-5. Shelter Carrier (HMMWV) With S-250 or S-250E Shelter**

| SHELTER VARIANT NOMENCLATURE | MAX WEIGHT (POUNDS) | SLING SET | LINK COUNT FRONT/REAR | RECOMMENDED AIRSPEED (KNOTS) |
|---|---|---|---|---|
| NC Operations | 8,800 | 10K | 80/30 | 110 |
| NC Switch | 8,513 | 10K | 80/30 | 100 |
| NC LOS (V3) | 8,611 | 10K | 80/30 | 100 |
| NC Management | 8,800 | 10K | 80/30 | 100 |
| NC Support Vehicle | 8,400 | 10K | 80/30 | 100 |
| LEN Operations | 8,800 | 10K | 80/30 | 100 |
| LEN Switch | 8,800 | 10K | 80/30 | 100 |
| LEN LOS (V4) | 8,800 | 10K | 80/30 | 100 |
| LEN Management | 8,800 | 10K | 80/30 | 100 |
| LEN Cable Vehicle | 8,180 | 10K | 80/30 | 100 |
| SCC Command | 8,800 | 10K | 80/30 | 100 |
| SCC Planning | 8,300 | 10K | 80/30 | 100 |
| SCC Technical | 8,507 | 10K | 80/30 | 100 |
| LOS (V1) | 8,800 | 10K | 80/30 | 100 |
| LOS (V2) | 8,500 | 10K | 80/30 | 100 |
| Radio Access Unit | 8,800 | 10K | 80/30 | 100 |
| SEN (V1) | 8,800 | 10K | 80/30 | 100 |
| SEN (V2) | 8,800 | 10K | 80/30 | 100 |
| Maintenance #1 | 8,084 | 10K | 80/30 | 100 |
| Maintenance #2 | 8,350 | 10K | 80/30 | 100 |

**Table 2-5. Shelter Carrier (HMMWV) With S-250/S-250E Shelter (Continued)**

| SHELTER VARIANT NOMENCLATURE | MAX WEIGHT (POUNDS) | SLING SET | LINK COUNT FRONT/REAR | RECOMMENDED AIRSPEED (KNOTS) |
|---|---|---|---|---|
| Battalion Spares | 8,800 | 10K | 80/30 | 100 |
| Company Spares | 7,850 | 10K | 80/30 | 100 |
| AN/TLQ-17A (V3) | 8,040 | 10K | 80/30 | 100 |
| Deployable Media Production Center | 7,840 | 10K | 80/30 | 120 |
| Operational Control Group (OCG) / Firefinder AN/TPQ-36 (V) Block IIB | 7,500 | 10K | 80/30 | 100 |
| TLQ-37 Intelligence and Electronic Warfare (IEW) System | 8,200 | 10K | 80/30 | 100 |

**b. Materials.** The following materials are required to rig this load:

**(1)** Sling set (10,000-pound capacity).

**(2)** Chain length, part number 38850-00053-101, from a 10,000-pound capacity sling set (4 each).

**(3)** Coupling link, part number 577-0615, from a 10,000-pound sling set (4 each).

**(4)** Tape, adhesive, pressure-sensitive, 2-inch wide roll.

**(5)** Cord, nylon, Type III, 550-pound breaking strength.

**(6)** Webbing, cotton, 1/4-inch, 80-pound breaking strength.

**(7)** Felt sheet, cattle hair, Type IV, 1/2-inch or suitable padding.

**(8)** Padding, Cellulose.

**c. Personnel.** Two persons can prepare and rig this load in 15 minutes.

**d. Procedures.** The following procedures apply to this load:

**(1) Preparation.** Prepare the load using the following steps:

**(a)** Connect one additional chain length to each chain of the sling set with the coupling link.

**(b)** Fold mirrors forward in front of the windshield for added protection and tie together with Type III nylon cord. Tape the windshield in an X formation from corner to corner.

**(c)** Secure the shelter to the truck using wire rope or tie-down assemblies. Secure all equipment inside the shelter with tape, nylon cord, or lashings; close and secure the door.

**(d)** Secure all equipment and cargo inside the vehicle with tape, nylon cord, or lashings. Secure the doors shut if installed.

**(e)** Ensure the fuel tank is not over 3/4 full. Inspect fuel tank cap, oil filler cap, and battery caps for proper installation.

**(f)** Engage the vehicle parking brake and put the transmission in neutral.

**(g)** Ensure the front wheels are pointed straight ahead. Tie down the steering wheel, using the securing

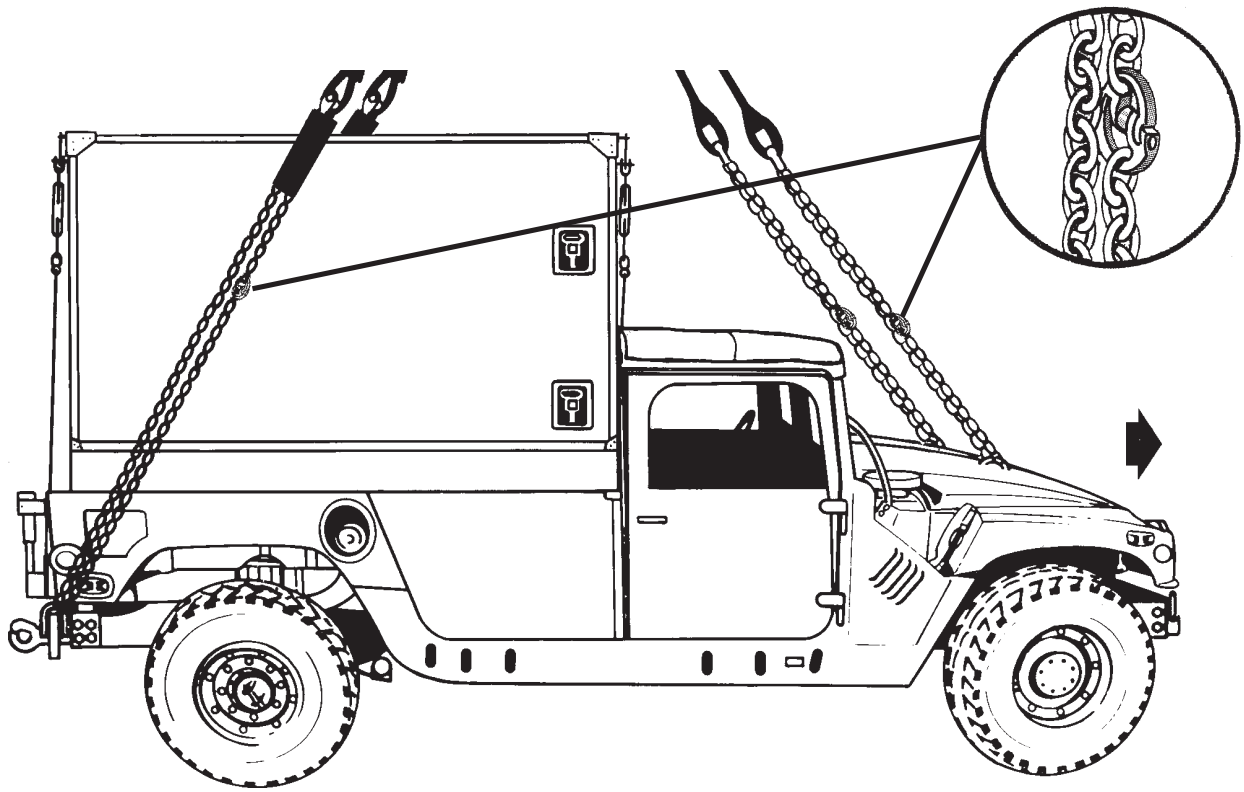

**RIGGING STEPS**

**1.** Position apex fitting on top of the shelter. Route outer sling legs 1and 2 to the front of the vehicle and inner sling legs 3 and 4 to the rear. Sling legs 1 and 3 must be on the left side of the load.

**2.** Loop the chain end of sling leg 1 through the left front lift provision that protrudes through the hood from inboard to outboard. Place the correct link from Table 2-5 in the grab hook. Repeat with sling leg 2 and the right front lift provision. Secure excess chain with tape or Type III nylon cord.

**3.** Route the chain end of sling leg 3 through the lift provision located on the left end of the rear bumper from inboard to outboard. Place the correct link from Table 2-5 in the grab hook. Repeat with sling leg 4 and the right rear lift provision. Secure excess chain with tape or Type III nylon cord.

**4.** Wrap the rear slings with padding where they contact the shelter sides.

**5.** Raise the apex fitting above the shelter carrier keeping the slings to the side of the shelter.

**6.** Cluster and tie or tape (breakaway technique) all sling legs together on top of the shelter to prevent entanglement during hookup and lift-off.

***Figure 2-5. M1037/1042 Shelter Carrier with S-250/S-250E Shelter***

**CAUTION**

**Do not use the lift shackles located near the center of the rear bumper for sling load lift provisions.**

**(h)** Install the lift provisions on the outer ends of the rear bumper by removing the tiedown provisions located inboard of the bumper end and installing them on the outer ends of the rear bumper.

**(2) Rigging.** Rig the load according to the steps in Figure 2-5.

**NOTE: Hookup of this load presents substantial risk of damage to the load or injury to the hookup personnel. Use of a reach pendant is recommended for this load.**

**(3) Hookup.** The hookup team stands on top of the shelter. The static wand person discharges the static electricity with the static wand. The hookup person places the apex fitting onto the aircraft cargo hook. The hookup team then carefully dismounts the vehicle and remains close to the load as the helicopter removes slack from the sling legs. When successful hookup is assured, the hookup team quickly exits the area underneath the helicopter to the designated rendezvous point.

**(4) Derigging.** Derigging is the reverse of the preparation and rigging procedures in steps d (1) and d (2).

## 2-7. M1097 Shelter Carrier, Heavy HMMWV, With S-250 or S-250E Shelter

**a. Applicability.** The following items in Table 2-6 are certified for all helicopters with suitable lift capacity by the US Army Soldier Systems Center:

**Table 2-6. Shelter Carrier, (Heavy HMMWV), With S-250/S-250E Shelter**

| NOMENCLATURE | MAX WEIGHT (POUNDS) | SLING SET | LINK COUNT FRONT / REAR | RECOMMENDED AIRSPEED (KNOTS) |
|---|---|---|---|---|
| S-250/S-250E | 10,001 | 25K | 60/10 | 120 |
| AN/TRC-170 Communication Shelter | 9,240 | 15K | 40/3 | 130 |
| TRQ-32, Intelligence and Electronic Warfare (IEW) System | 9,700 | 10K | 60/10 | 120 |
| Platoon Operations Center (POC), Intelligence and Electronic Warfare (IEW) System | 9,700 | 10K | 60/10 | 120 |
| Mobile Subscriber Equipment Contingency Communications Package/Light Forces Contingency Communications Package in S-250E | 9,993 | 10K | 60/10 | 120 |
| Mobile Subscriber Equipment Contingency Communications Package/Light Forces Contingency Communications Package in S-250 | 8,913 | 10K | 60/10 | 120 |
| LOS (V1) | 9,038 | 10K | 60/10 | 120 |
| LOS (V2) | 9,038 | 10K | 60/10 | 120 |
| LOS (V3) | 9,038 | 10K | 60/10 | 120 |
| LOS (V4) | 9,038 | 10K | 60/10 | 120 |
| NODAL Support Vehicle | 8,250 | 10K | 60/10 | 120 |

**NOTE: All certified shelters in paragraph 2-6 (M1037/ M1042 Shelter Carrier, HMMWV, With S-250/S-250E Shelter) are certified for sling loading on the M1097 Shelter Carrier with an increased maximum weight of 300 pounds.**

**b. Materials.** The following materials are required to rig this load:

**(1)** Sling set (10,000-pound capacity or 25,000-pound capacity).

**OR**

**(2)** Multileg sling set (15,000-pound capacity for the CH-53E only).

**(a)** Additional chain lengths from the sling set being used (4 each).

**(b)** Additional coupling links from the sling set being used (4 each).

**(3)** Tape, adhesive, pressure-sensitive, 2-inch wide roll.

**(4)** Cord, nylon, Type III, 550-pound breaking strength.

**(5)** Webbing, cotton, 1/4-inch, 80-pound breaking strength.

**(6)** Felt sheet, cattle hair, Type IV, 1/2-inch or suitable padding.

**(7)** Padding, Cellulose.

**c. Personnel.** Two persons can prepare and rig this load in 15 to 25 minutes.

**d. Procedures.** The following procedures apply to this load:

**(1) Preparation.** Prepare the load using the following steps:

**(a)** Connect one additional chain length to each chain of the sling set with the coupling link.

**(b)** Fold mirrors forward in front of the windshield and tie together with Type III nylon cord. Tape the windshield in an X formation from corner to corner.

**(c)** Secure the shelter to the truck using wire rope or tie-down assemblies. Secure all equipment inside the shelter with tape, nylon cord, or lashings; close and secure the door.

**(d)** Secure all equipment and cargo inside the vehicle with tape, nylon cord, or lashings. Secure the doors shut if installed.

**(e)** Ensure the fuel tank is not over 3/4 full. Inspect fuel tank cap, oil filler cap, and battery caps for proper installation.

**(f)** Engage the vehicle parking brake and put the transmission in neutral.

**(g)** Ensure the front wheels are pointed straight ahead. Tie down the steering wheel, using the securing device attached under the dashboard.

**(h)** Install the lift provisions on the outer ends of the rear bumper by removing the tiedown provisions located inboard of the bumper end and installing them on the outer ends of the rear bumper.

**(i)** When using the multileg sling set, attach an additional chain length to the end of the chain on each sling leg with the coupling link.

**(2) Rigging.** Rig the load according to the steps in Figure 2-6.

**NOTE: Hookup of this load presents substantial risk of damage to the load or injury to the hookup personnel. Use of a reach pendant is recommended for this load.**

**(3) Hookup.** The hookup team stands on top of the shelter. The static wand person discharges the static electricity with the static wand. The hookup person places the apex fitting onto the aircraft cargo hook. The hookup team then carefully dismounts the vehicle and remains close to the load as the helicopter removes slack from the sling legs. When successful hookup is assured, the hookup team quickly exits the area underneath the helicopter to the designated rendezvous point.

**(4) Derigging.** Derigging is the reverse of the preparation and rigging procedures in steps d (1) and d (2).

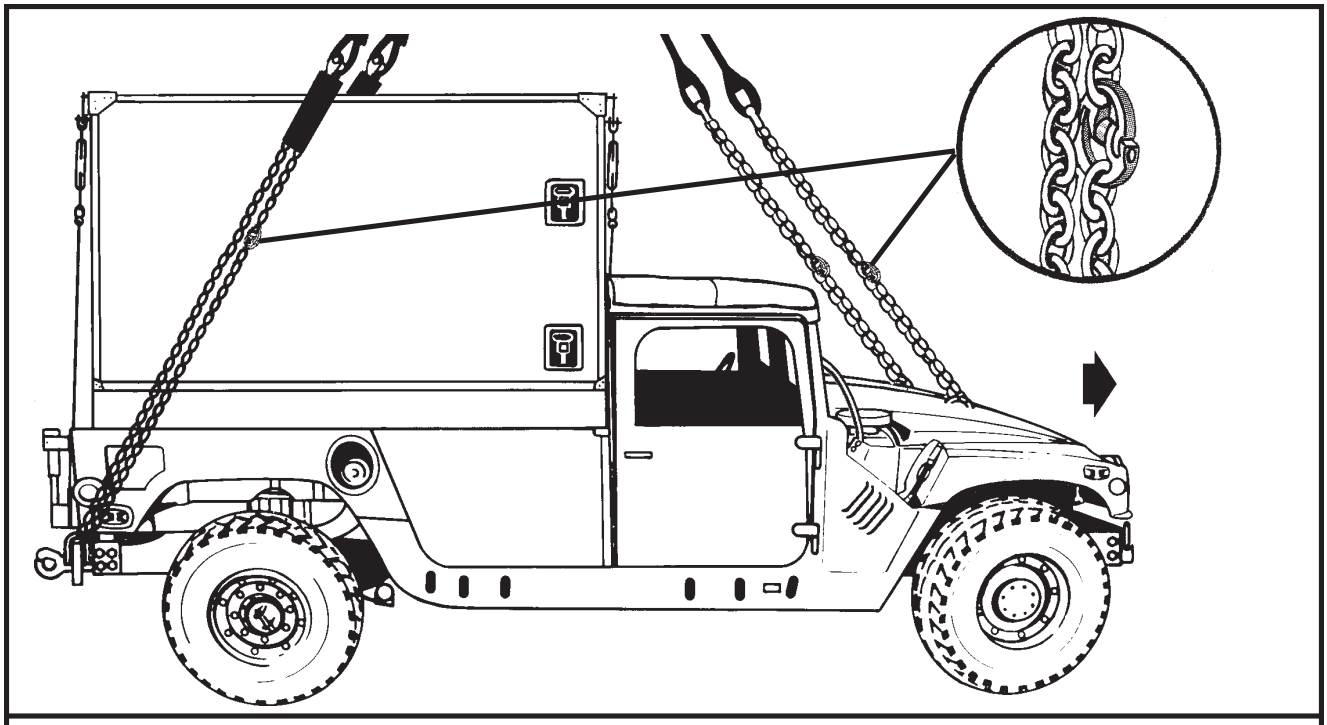

**RIGGING STEPS**

**1.** Position apex fitting on top of the shelter. Route outer sling legs 1and 2 to the front of the vehicle and inner sling legs 3 and 4 to the rear. Sling legs 1 and 3 must be on the left side of the load.

**2.** Loop the chain end of sling leg 1 through the left front lift provision that protrudes through the hood from inboard to outboard. Place the correct link from Table 2-6 in the grab hook. Repeat with sling leg 2 and the right front lift provision. Secure excess chain with tape or Type III nylon cord.

**3.** Route the chain end of sling leg 3 through the lift provision located on the left end of the rear bumper from inboard to outboard. Place the correct link from Table 2-6 in the grab hook. Repeat with sling leg 4 and the right rear lift provision. Secure excess chain with tape or Type III nylon cord.

**4.** Wrap the rear slings with padding where they contact the shelter sides.

**5.** Raise the apex fitting above the shelter carrier keeping the slings to the side of the shelter.

**6.** Cluster and tie or tape (breakaway technique) all sling legs together on top of the shelter to prevent entanglement during hookup and lift-off.

***Figure 2-6. M1097 Shelter Carrier with S-250/S-250E Shelter***

**CAUTION**

**Do not use the lift shackles located near the center of the rear bumper for sling load lift provisions.**

## 2-8. M1037 Shelter Carrier (Heavy HMMWV) With Downsized Direct Support Section (DDSS) Shelter

**a. Applicability.** The following item in Table 2-7 is certified for all helicopters with suitable lift capacity by the US Army Natick Research, Development, and Engineering Center:

**Table 2-7. Downsized Direct Support Section Shelter**

| NOMENCLATURE | MAX WEIGHT (POUNDS) | SLING SET | LINK COUNT FRONT/REAR | RECOMMENDED AIRSPEED (KNOTS) |
|---|---|---|---|---|
| Downsized Direct Support Section (DDSS) | 8,030 | 10K | 70/3 | 100 |

**b. Materials.** The following materials are required to rig this load:

**(1)** Sling set (10,000-pound capacity).

**(2)** Chain length, part number 38850-00053-101, from a 10,000-pound capacity sling set (4 each).

**(3)** Coupling link, part number 577-0615, from a 10,000-pound sling set (4 each).

**(4)** Tape, adhesive, pressure-sensitive, 2-inch wide roll.

**(5)** Cord, nylon, Type III, 550-pound breaking strength.

**(6)** Webbing, cotton, 1/4-inch, 80-pound breaking strength.

**(7)** Felt sheet, cattle hair, Type IV, 1/2-inch or suitable padding.

**(8)** Padding, Cellulose.

**c. Personnel.** Two persons can prepare and rig this load in 15 minutes.

**d. Procedures.** The following procedures apply to this load:

**(1) Preparation.** Prepare the load using the following steps:

**(a)** Connect one additional chain length to each chain of the sling set with the coupling link.

**(b)** Fold mirrors forward in front of the windshield for added protection and tie together with Type III nylon cord.

**(c)** Secure the shelter to the truck using wire rope or tie-down assemblies.

**(d)** Remove the ladder from the rear of the shelter. Secure the ladder inside the shelter. Secure all equipment inside the shelter with tape, nylon cord, or lashings; close and secure shelter vents and door with nylon cord or tape.

**(e)** Secure all equipment and cargo inside the vehicle with tape, nylon cord, or lashings. Secure the doors shut if installed.

**(f)** Ensure the fuel tank is not over 3/4 full. Inspect fuel tank cap, oil filler cap, and battery caps for proper installation.

**(g)** Engage the vehicle parking brake and put the transmission in neutral.

**(h)** Ensure the front wheels are pointed straight ahead. Tie down the steering wheel, using the securing device attached under the dashboard.

**(i)** Tape the windshield in an X formation from corner to corner.

**(j)** Install the lift provisions on the outer ends of the rear bumper by removing the tiedown provisions located inboard of the bumper end and installing them on the outer ends of the rear bumper

.

**(2) Rigging.** Rig the load according to the steps in Figure 2-7.

**NOTE: Hookup of this load presents substantial risk of damage to the load or injury to the hookup personnel. Use of a reach pendant is recommended for this load.**

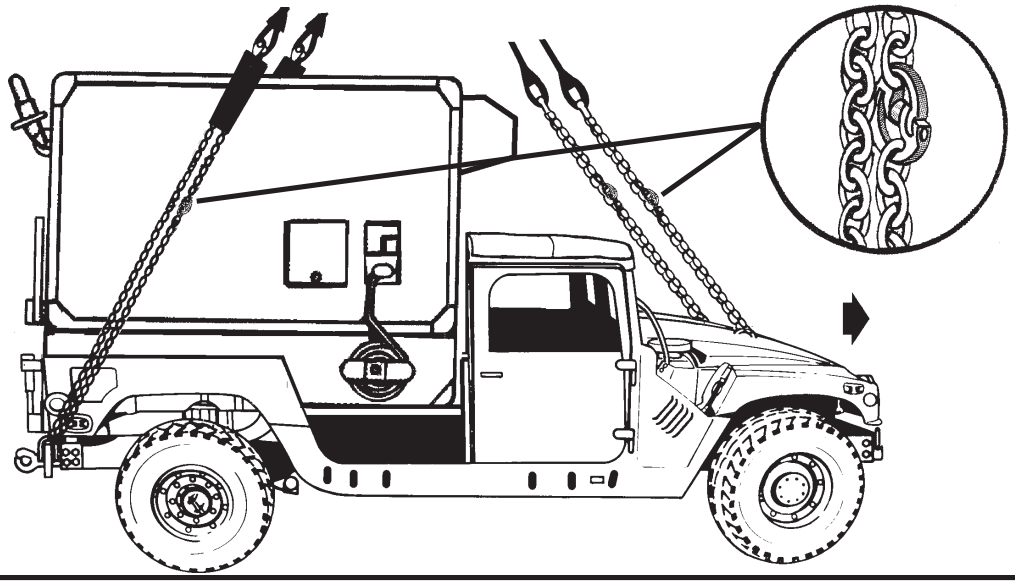

**RIGGING STEPS**

**1.** Position apex fitting on top of the shelter. Route outer sling legs 1and 2 to the front of the vehicle and inner sling legs 3 and 4 to the rear. Sling legs 1 and 3 must be on the left side of the load.

**2.** Loop the chain end of sling leg 1 through the left front lift provision that protrudes through the hood from inboard to outboard. Place the correct link from Table 2-7 in the grab hook. Repeat with sling leg 2 and the right front lift provision. Secure excess chain with tape or Type III nylon cord.

**3.** Route the chain end of sling leg 3 through the lift provision located on the left end of the rear bumper from inboard to outboard. Place the correct link from Table 2-7 in the grab hook. Repeat with sling leg 4 and the right rear lift provision. Secure excess chain with tape or Type III nylon cord.

**4.** Wrap the rear slings with padding where they contact the shelter sides.

**5.** Raise the apex fitting above the shelter carrier keeping the slings to the side of the shelter.

**6.** Cluster and tie or tape (breakaway technique) all sling legs together on top of the shelter to prevent entanglement during hookup and lift-off.

***Figure 2-7. Downsized Direct Support Section Mounted on the M1037***

**CAUTION**

**Do not use the lift shackles located near the center of the rear bumper for sling load lift provisions.**

**(3) Hookup.** The hookup team stands on top of the shelter. The static wand person discharges the static electricity with the static wand. The hookup person places the apex fitting onto the aircraft cargo hook. The hookup team then carefully dismounts the vehicle and remains close to the load as the helicopter removes slack from the sling legs. When successful hookup is assured, the hookup team quickly exits the area underneath the helicopter to the designated rendezvous point.

**(4) Derigging.** Derigging is the reverse of the preparation and rigging procedures in steps d (1) and d (2).

## 2-9. M1037 Shelter Carrier (HMMWV) With S-318 Shelter

**a. Applicability.** The following item in Table 2-8 is certified for all helicopters with suitable lift capacity by the US Army Natick Research, Development, and Engineering Center:

**Table 2-8. S-318 Shelter**

| NOMENCLATURE | MAX WEIGHT (POUNDS) | SLING SET | LINK COUNT FRONT/REAR | RECOMMENDED AIRSPEED (KNOTS) |
|---|---|---|---|---|
| S-318 Shelter Mounted on M1037 | 7,440 | 10K | 80/30 | 100 |

**b. Materials.** The following materials are required to rig this load.

**(1)** Sling set (10,000-pound capacity).

**(2)** Chain length, part number 38850-00053-101, from a 10,000-pound capacity sling set (4 each).

**(3)** Coupling link, part number 577-0615, from a 10,000-pound sling set (4 each).

**(4)** Tape, adhesive, pressure-sensitive, 2-inch wide roll.

**(5)** Cord, nylon, Type III, 550-pound breaking strength.

**(6)** Webbing, cotton, 1/4-inch, 80-pound breaking strength.

**(7)** Felt sheet, cattle hair, Type IV, 1/2-inch or suitable padding.

**(8)** Padding, Cellulose.

**c. Personnel.** Two persons can prepare and rig this load in 15 minutes.

**d. Procedures.** The following procedures apply to this load:

**(1) Preparation.** Prepare the load using the following steps:

**(a)** Connect one additional chain length to each chain of the sling set with the coupling link.

**(b)** Fold mirrors forward in front of the windshield for added protection and tie together with Type III nylon cord.

**(c)** Secure the shelter to the truck using wire rope or tie-down assemblies.

**(d)** Secure all equipment inside the shelter with tape, nylon cord, or lashings; close and secure shelter vents and door with nylon cord or tape.

**(e)** Secure all equipment and cargo inside the vehicle with tape, nylon cord, or lashings. Secure the doors shut if installed.

**(f)** Ensure the fuel tank is not over 3/4 full. Inspect fuel tank cap, oil filler cap, and battery caps for proper installation.

**(g)** Engage the vehicle parking brake and put the

**(g)** Engage the vehicle parking brake and put the transmission in neutral.

**(h)** Ensure the front wheels are pointed straight ahead. Tie down the steering wheel, using the securing device attached under the dashboard.

**(i)** Tape the windshield in an X formation from corner to corner.

**(j)** Install the lift provisions on the outer ends of the rear bumper by removing the tiedown provisions located inboard of the bumper end and installing them on the outer ends of the rear bumper.

**(2) Rigging.** Rig the load according to the steps in Figure 2-8.

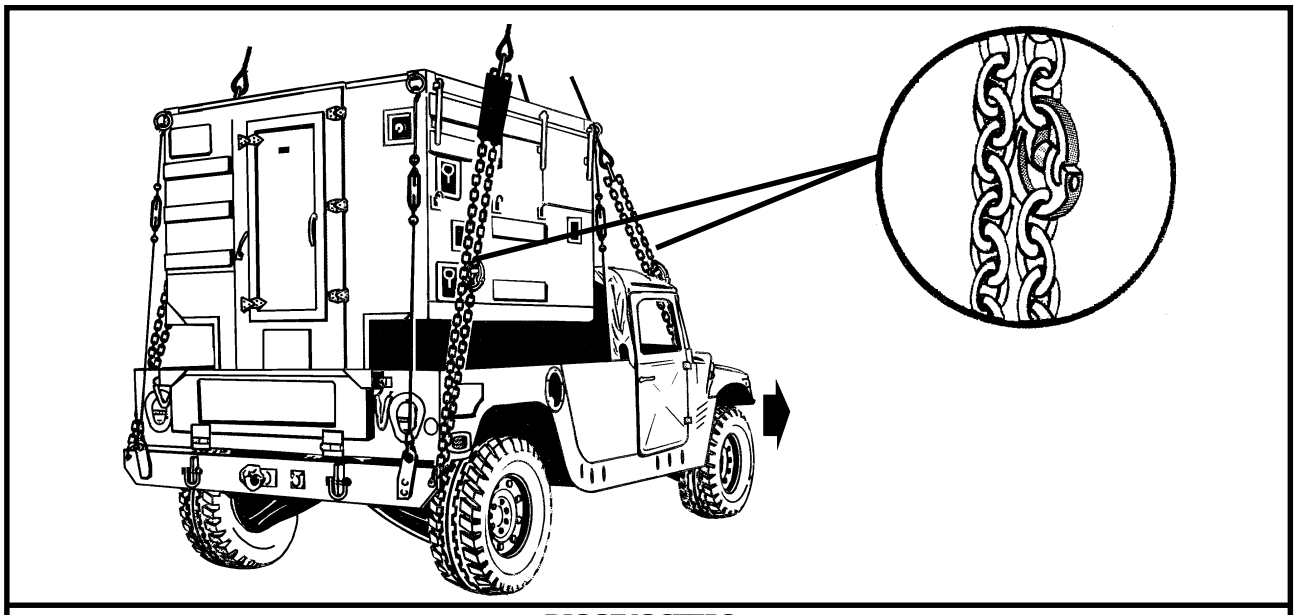

**RIGGING STEPS**

**1.** Position apex fitting on top of the shelter. Route outer sling legs 1and 2 to the front of the vehicle and inner sling legs 3 and 4 to the rear. Sling legs 1 and 3 must be on the left side of the load.

**2.** Loop the chain end of sling leg 1 through the left front lift provision that protrudes through the hood from inboard to outboard. Place the correct link from Table 2-8 in the grab hook. Repeat with sling leg 2 and the right front lift provision. Secure excess chain with tape or Type III nylon cord.

**3.** Route the chain end of sling leg 3 through the lift provision located on the left end of the rear bumper from inboard to outboard. Place the correct link from Table 2-8 in the grab hook. Repeat with sling leg 4 and the right rear lift provision. Secure excess chain with tape or Type III nylon cord.

**4.** Wrap the rear slings with padding where they contact the shelter sides.

**5.** Raise the apex fitting above the shelter carrier keeping the slings to the side of the shelter.

**6.** Cluster and tie or tape (breakaway technique) all sling legs together on top of the shelter to prevent entanglement during hookup and lift-off.

***Figure 2-8. S-318 Shelter Mounted on the M1037***

**CAUTION**

**Do not use the lift shackles located near the center of the rear bumper for sling load lift provisions.**

**NOTE: Hookup of this load presents substantial risk of damage to the load or injury to the hookup personnel. Use of a reach pendant is recommended for this load.**

**(3) Hookup.** The hookup team stands on top of the shelter. The static wand person discharges the static electricity with the static wand. The hookup person places the apex fitting onto the aircraft cargo hook. The hookup team then carefully dismounts the vehicle and remains close to the load as the helicopter removes slack from the sling legs. When successful hookup is assured, the hookup team quickly exits the area underneath the helicopter to the designated rendezvous point.

**(4) Derigging.** Derigging is the reverse of the preparation and rigging procedures in steps d (1) and d (2).

## 2-10. M1097/M1097A2 Shelter Carrier (HMMWV) With Lightweight Multipurpose Shelter (LMS)

**a. Applicability.** The following items in Table 2-9 are certified for all helicopters with suitable lift capacity by the US Army Soldier Systems Center:

**Table 2-9. Lightweight Multipurpose Shelter (LMS)**

| SHELTER VARIANT NOMENCLATURE | MAX WEIGHT (POUNDS) | SLING SET | LINK COUNT FRONT/REAR | RECOMMENDED AIRSPEED (KNOTS) |
|---|---|---|---|---|
| High Mobility Downsized (HMD) Direct Air Support Central | 8,420 | 15K | 40/3 | 120 |
| Operations Central (OC) Group Firefinder AN/TPQ-36 (V) 8 | 8,620 | 10K | 50/3 | 120 |
| Biological Integrated Detection System (BIDS) | 9,000 | 10K | 40/3 | 110 |
| Integrated Meteorological Systems (IMETS), Block I & II | 9,050 | 10K | 70/3 | 120 |
| Enhanced Position Location Reporting System (EPLRS) Downsized Net Control Station (NCS-E(D) | 10,000 | 10K | 70/3 | 120 |
| Digital Group Multiplexer (DGM) AN/TRC-138C | 9,020 | 10K | 60/10 | 115 |
| High Mobility Digital Group Multiplexer Assemblage (HMDA) AN/TRC-173B, AN/TRC-174B, AN/TRC-175B | 9,100 | 10K | 60/10 | 100 |
| High Frequency Communications Central AN/TRC 120 | 8,765 | 15K | 50/5 | 120 |
| Marine Expeditionary Force Intelligence Analysis System (IAS) | 9,220 | 15K | 64/2 | 120 |

**Table 2-9. Lightweight Multipurpose Shelter (LMS) (continued)**

| NOMENCLATURE | MAX WEIGHT (POUNDS) | SLING SET | LINK COUNT FRONT/REAR | RECOMMENDED AIRSPEED (KNOTS) |
|---|---|---|---|---|
| Spare Equipment and Maintenance Shelter AN/TSQ-190 (V) 1 | 9,220 | 10K | 40/3 | 120 |
| Tactical Remote Sensor System (TRSS) Sensor Mobile Monitoring System (SMMS) | 7,685 | 10K | 40/3 | 120 |
| Meteorological Measuring Set AN/TMQ-41 | 7,770 | 15K | 40/3 | 120 |
| Air Defense Communications Platform AN/MSQ-124 | 10,000 | 10K | 40/3 | 120 |
| Forward Area Air Defense Command Control System AN/TSQ-182 | 9,800 | 10K | 40/3 | 100 |
| Forward Area Air Defense Command Control System AN/TSQ-183 | 7,561 | 10K | 40/3 | 100 |
| Forward Area Air Defense Command Control System AN/TSQ-184 | 7,297 | 10K | 40/3 | 100 |
| Mobile Radio Broadcasting Subsystem (MRBS) | 9,746 | 10K | 40/3 | 120 |
| Mobile Radio (MR) Cargo Vehicle | 9,907 | 10K | 40/3 | 120 |
| Mobile Television Broadcasting Subsystem (MTBS) | 9,295 | 10K | 40/3 | 120 |
| Mobile Television (MT) Cargo Vehicle | 9,637 | 10K | 40/3 | 120 |
| Common Ground Station, Joint Surveillance Target Attack Radar (JSTAR) System | 10,300 | 25K<br>15K | 32/5<br>40/3 | 120 |
| Advanced Field Artillery Tactical Data Systems (AFATADS), System #1, RWS with a CHS-2 AN/GYG-3(V)1 | 8,882 | 10K | 50/3 | 100 |
| Marine Expeditionary Force Intelligence Analysis System S1 | 9,194 | 15K | 40/3 | 100 |
| Marine Expeditionary Force Intelligence Analysis System S2 | 9,126 | 15K | 40/3 | 100 |
| Tactical Control and Analysis Center | 9,300 | 15K | 40/3 | 100 |

**b. Materials.** The following materials are required to rig this load:

**(1)** Sling set (10,000-pound capacity or 25,000-pound capacity).

**(a)** Chain length, part number 38850-00053-101, for a 10,000-pound capacity sling set or chain length, part number 38850-00053-102, for a 25,000-pound capacity sling set (4 each).

**(b)** Coupling link, part number 577-0615, for a 10,000-pound sling set or coupling link, part number 664241, for a 25,000-pound sling set (4 each).

**OR**

**(2)** Multileg sling set (15,000-pound capacity for the CH-53E only).

**(a)** Additional chain lengths from 15,000-pound capacity sling sets (8 each).

**(b)** Additional coupling links from 15,000-pound capacity sling sets (8 each).

**(3)** Tape, adhesive, pressure-sensitive, 2-inch wide roll.

**(4)** Cord, nylon, Type III, 550-pound breaking strength.

**(5)** Webbing, cotton, 1/4-inch, 80-pound breaking strength.

**(6)** Felt sheet, cattle hair, Type IV, 1/2-inch or suitable padding.

**c. Personnel.** Two persons can prepare and rig this load in 15 minutes.

**d. Procedures.** The following procedures apply to this load:

**(1) Preparation.** Prepare the load using the following steps:

**(a)** Extend the sling leg chains by connecting one additional chain length to each chain on a 10,000-, 25,000- or 40,000-pound capacity sling set with coupling links. Connect two additional chain lengths to each chain on the 15,000-pound multileg sling set chain with coupling links.

**(b)** Fold mirrors forward in front of the windshield for added protection and tie together with Type III nylon cord.

**(c)** Secure the shelter to the truck using wire rope or tie-down assemblies.

**(d)** Secure all equipment inside the shelter with tape, nylon cord, or lashings; close and secure shelter vents and door with nylon cord or tape.

**(e)** Secure environmental control unit cover with tape.

**(f)** Disconnect the power cord from the rear panel and secure it to the rear platform with Type III nylon cord. Lower the power panel door and secure the door.

**(g)** Secure all equipment and cargo inside the vehicle with tape, nylon cord, or lashings. Secure the doors shut if installed.

**(h)** Ensure the fuel tank is not over 3/4 full. Inspect fuel tank cap, oil filler cap, and battery caps for proper installation.

**(i)** Engage the vehicle parking brake and put the transmission in neutral.

**(j)** Ensure the front wheels are pointed straight ahead. Tie down the steering wheel, using the securing device attached under the dashboard.

**(k)** Tape the windshield in an X formation from corner to corner.

**(l)** Install the lift provisions on the outer ends of the rear bumper by removing the tiedown provisions located inboard of the bumper end and installing them on the outer ends of the rear bumper.

**(m)** Remove the upper antenna mounting bracket if installed.

**(2) Rigging.** Rig the load according to the steps in Figure 2-9.

**NOTE: Hookup of this load presents substantial risk of damage to the load or injury to the hookup personnel. Use of a reach pendant is recommended for this load.**

**(3) Hookup.** The hookup team stands on top of the shelter. The static wand person discharges the static electricity with the static wand. The hookup person places the apex fitting onto the aircraft cargo hook. The hookup team then carefully dismounts the vehicle and remains close to the load as the helicopter removes slack from the

sling legs. When successful hookup is assured, the hookup team quickly exits the area underneath the helicopter to the designated rendezvous point.

**(4) Derigging.** Derigging is the reverse of the preparation and rigging procedures in steps d (1) and d (2).

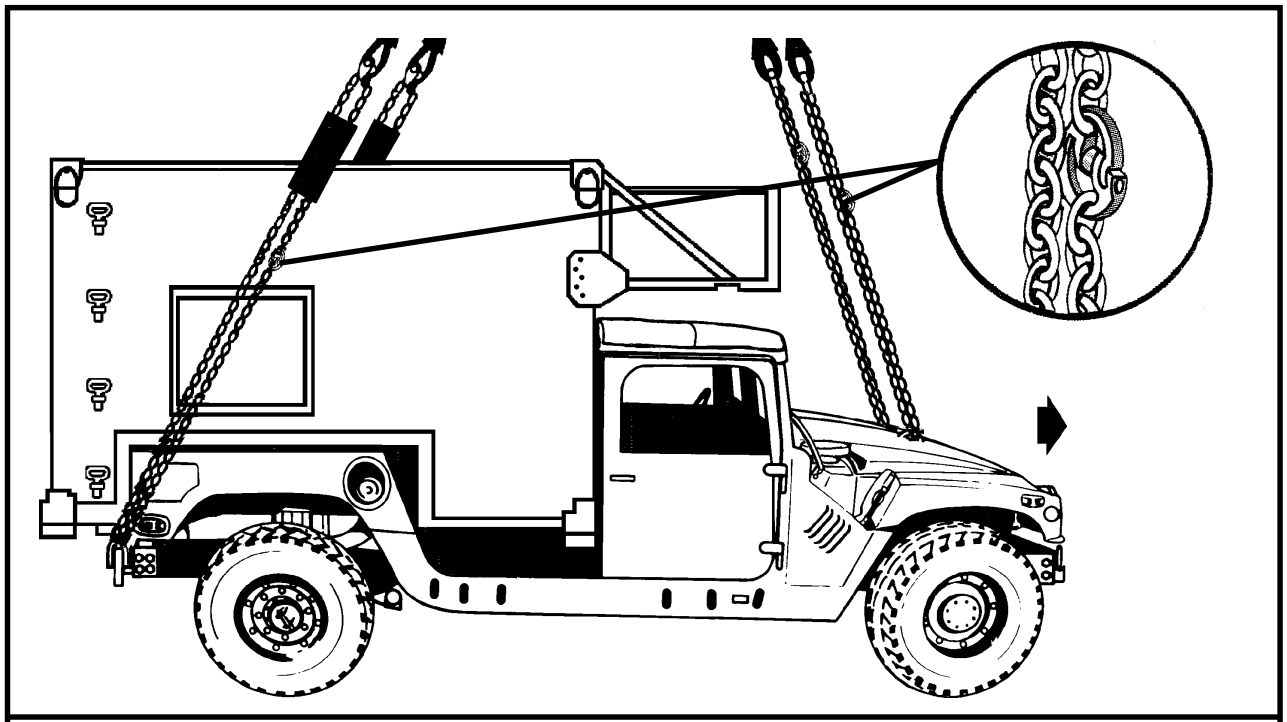

**RIGGING STEPS**

**1.** Position apex fitting on top of the shelter. Route outer sling legs 1and 2 to the front of the vehicle and inner sling legs 3 and 4 to the rear. Sling legs 1 and 3 must be on the left side of the load.

**2.** Loop the chain end of sling leg 1 through the left front lift provision that protrudes through the hood from inboard to outboard. Place the correct link from Table 2-9 in the grab hook. Repeat with sling leg 2 and the right front lift provision. Secure excess chain with tape or Type III nylon cord.

**3.** Route the chain end of sling leg 3 through the lift provision located on the left end of the rear bumper from inboard to outboard. Place the correct link from Table 2-9 in the grab hook. Repeat with sling leg 4 and the right rear lift provision. Secure excess chain with tape or Type III nylon cord.

**4.** Wrap the rear slings with padding where they contact the shelter sides.

**5.** Raise the apex fitting above the shelter carrier keeping the slings to the side of the shelter.

**6.** Cluster and tie or tape (breakaway technique) all sling legs together on top of the shelter to prevent entanglement during hookup and lift-off.

*Figure 2-9. LMS Shelter Mounted on the M1097 /M1097A2*

**CAUTION**

**Do not use the lift shackles located near the center of the rear bumper for sling load lift provisions.**

## 2-11. M1037/M1042 Shelter Carrier (HMMWV) With Lightweight Multipurpose Shelter (LMS)

**a. Applicability.** The following item in Table 2-10 is certified for all helicopters with suitable lift capacity by the US Army Soldier Systems Center:

**Table 2-10. Lightweight Multipurpose Shelter (LMS) on M1037/M1042**

| NOMENCLATURE | MAX WEIGHT (POUNDS) | SLING SET | LINK COUNT FRONT/REAR | RECOMMENDED AIRSPEED (KNOTS) |
|---|---|---|---|---|
| High Frequency Communications Central AN/TSC-120 | 8,365 | 15K | 50/5 | 120 |

**b. Materials.** The following materials are required to rig this load.

**(1)** Multileg sling set (15,000-pound capacity for the CH-53E only).

**(a)** Additional chain lengths from 15,000-pound capacity sling sets (8 each).

**(b)** Additional coupling links from 15,000-pound capacity sling sets (8 each).

**(2)** Tape, adhesive, pressure-sensitive, 2-inch wide roll.

**(3)** Cord, nylon, Type III, 550-pound breaking strength.

**(4)** Webbing, cotton, 1/4-inch, 80-pound breaking strength.

**(5)** Felt sheet, cattle hair, Type IV, 1/2-inch or suitable padding.

**(6)** Padding, Cellulose.

**c. Personnel.** Two persons can prepare and rig this load in 15 minutes.

**d. Procedures.** The following procedures apply to this load:

**(1) Preparation.** Prepare the load using the following steps:

**(a)** Extend the sling leg chains by connecting one additional chain length to each chain on a 10,000-, 25,000- or 40,000-pound capacity sling set with coupling links. Connect two additional chain lengths to each chain on the 15,000-pound multileg sling set chain with coupling links.

**(b)** Fold mirrors forward in front of the windshield for added protection and tie together with Type III nylon cord.

**(c)** Secure the shelter to the truck using wire rope or tie-down assemblies.

**(d)** Secure all equipment inside the shelter with tape, nylon cord, or lashings; close and secure shelter vents and door with nylon cord or tape.

**(e)** Secure environmental control unit cover with duct tape.

**(f)** Disconnect the power cord from the rear panel and secure it to the rear platform with Type III nylon cord. Lower the power panel door and secure the door.

**(g)** Secure all equipment and cargo inside the vehicle with tape, nylon cord, or lashings. Secure the doors shut if installed.

**(h)** Ensure the fuel tank is not over 3/4 full. Inspect fuel tank cap, oil filler cap, and battery caps for proper installation.

**(i)** Engage the vehicle parking brake and put the transmission in neutral.

**(j)** Ensure the front wheels are pointed straight ahead. Tie down the steering wheel, using the securing device attached under the dashboard.

**(k)** Tape the windshield in an X formation from corner to corner.

**(l)** Install the lift provisions on the outer ends of the rear bumper by removing the tiedown provisions located inboard of the bumper end and installing them on the outer ends of the rear bumper.

**(2) Rigging.** Rig the load according to the steps in Figure 2-9.

**NOTE: Use the link count from Table 2-10.**

**NOTE: Hookup of this load presents substantial risk of damage to the load or injury to the hookup personnel. Use of a reach pendant is recommended for this load.**

**(3) Hookup.** The hookup team stands on top of the shelter. The static wand person discharges the static electricity with the static wand. The hookup person places the apex fitting onto the aircraft cargo hook. The hookup team then carefully dismounts the vehicle and remains close to the load as the helicopter removes slack from the sling legs. When successful hookup is assured, the hookup team quickly exits the area underneath the helicopter to the designated rendezvous point.

**(4) Derigging.** Derigging is the reverse of the preparation and rigging procedures in steps d (1) and d (2).

## 2-12. M1037/M1097 Shelter Carrier (HMMWV) With G15840 Smoke Generator Set, M157/ M157A1E1

**a. Applicability.** The following items in Table 2-11 are certified for all helicopters with suitable lift capacity by the US Army Natick Research, Development, and Engineering Center:

**Table 2-11. G15840 Smoke Generator Set, M157, on M1037/M1097**

| NOMENCLATURE | MAX WEIGHT (POUNDS) | SLING SET | LINK COUNT FRONT/REAR | RECOMMENDED AIRSPEED (KNOTS) |
|---|---|---|---|---|
| Smoke Generator Set, M157, on M1037 HMMWV | 7,400 | 10K | 80/30 | 100 |
| Smoke Generator Set, M157, on M1097 HMMWV | 8,025 | 10K | 80/30 | 120 |
| Smoke Generator Set, M157A1E1, on M1097 HMMWV | 8,035 | 10K | 80/30 | 120 |

**b. Materials.** The following materials are required to rig this load.

**(1)** Sling set (10,000-pound capacity).

**(2)** Tape, adhesive, pressure-sensitive, 2-inch wide roll.

**(3)** Cord, nylon, Type III, 550-pound breaking strength.

**(4)** Webbing, cotton, 1/4-inch, 80-pound breaking strength.

**(5)** Felt sheet, cattle hair, Type IV, 1/2-inch or suitable padding.

**c. Personnel.** Two persons can prepare and rig this load in 15 minutes.

**d. Procedures.** The following procedures apply to this load:

**(1) Preparation.** Prepare the load using the following steps:

**(a)** Fold mirrors forward in front of the windshield for added protection and tie together with Type III nylon cord.

**(b)** Secure all equipment and cargo inside the vehicle with tape, nylon cord, or lashings. Secure the doors shut if installed.

**(c)** Ensure the fuel tank is not over 3/4 full. Inspect fuel tank cap, oil filler cap, and battery caps for proper installation.

**(d)** Engage the vehicle parking brake and put the transmission in neutral.

**(e)** Ensure the front wheels are pointed straight ahead. Tie down the steering wheel, using the securing device attached under the dashboard.

**(f)** Tape the windshield in an X formation from corner to corner.

**(g)** Install the lift provisions on the outer ends of the rear bumper by removing the tiedown provisions located inboard of the bumper end and installing them on the outer ends of the rear bumper.

**(2) Rigging.** Rig the load according to the steps in Figure 2-10.

**(3) Hookup.** The hookup team stands on top of the shelter. The static wand person discharges the static electricity with the static wand. The hookup person places the apex fitting onto the aircraft cargo hook. The hookup

team then carefully dismounts the vehicle and remains close to the load as the helicopter removes slack from the sling legs. When successful hookup is assured, the hookup team quickly exits the area underneath the helicopter to the designated rendezvous point.

**(4) Derigging.** Derigging is the reverse of the preparation and rigging procedures in steps d (1) and d (2).

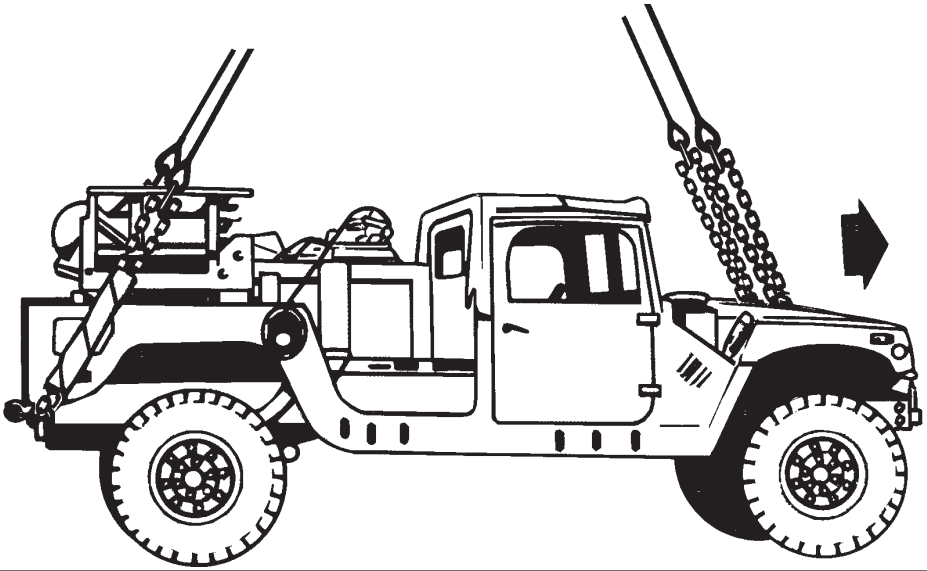

**RIGGING STEPS**

**1.** Position apex fitting on top of the roof of the HMMWV. Route outer sling legs 1and 2 to the front of the vehicle and inner sling legs 3 and 4 to the rear. Sling legs 1 and 3 must be on the left side of the load.

**2.** Loop the chain end of sling leg 1 through the left front lift provision that protrudes through the hood from inboard to outboard. Place the correct link from Table 2-11 in the grab hook. Repeat with sling leg 2 and the right front lift provision. Secure excess chain with tape or Type III nylon cord.

**3.** Route the chain end of sling leg 3 through the lift provision located on the left end of the rear bumper from inboard to outboard. Place the correct link from Table 2-11 in the grab hook. Repeat with sling leg 4 and the right rear lift provision. Secure excess chain with tape or Type III nylon cord.

**4.** Wrap the rear slings with padding where they contact the vehicles sides.

**5.** Raise the apex fitting above the shelter carrier keeping the slings to the side of the shelter.

**6.** Cluster and tie or tape (breakaway technique) all sling legs together on top of the shelter to prevent entanglement during hookup and lift-off.

*Figure 2-10. M157/M157A1E1 Smoke Generator Set Mounted on the M1037/M1097*

**CAUTION**

**Do not use the lift shackles located near the center of the rear bumper for sling load lift provisions.**

## 2-13. M998 (HMMWV) With Two MRC-127 Stacks

**a. Applicability.** The following item in Table 2-12 is certified for all helicopters with suitable lift capacity by the US Army Natick Research, Development, and Engineering Center:

**Table 2-12. M998 (HMMWV) With Two MRC-127 Stacks**

| NOMENCLATURE | MAX WEIGHT (POUNDS) | SLING SET | LINK COUNT FRONT/REAR | RECOMMENDED AIRSPEED (KNOTS) |
|---|---|---|---|---|
| MRC-127 Stacks (Two) on M998 HMMWV | 8,010 | 10K | 80/3 | 110 |

**b. Materials.** The following materials are required to rig this load:

**(1)** Sling set (10,000-pound capacity).

**(2)** Tape, adhesive, pressure-sensitive, 2-inch wide roll.

**(3)** Cord, nylon, Type III, 550-pound breaking strength.

**(4)** Webbing, cotton, 1/4-inch, 80-pound breaking strength.

**(5)** Felt sheet, cattle hair, Type IV, 1/2-inch or suitable padding.

**c. Personnel.** Two persons can prepare and rig this load in 20 minutes.

**d. Procedures.** The following procedures apply to this load:

**(1) Preparation.** Prepare the load using the following steps:

**(a)** Fold mirrors forward in front of the windshield for added protection and tie together with Type III nylon cord. If installed, remove canvas covering over the bed of the truck. Remove the doors. Tape the windshield in an X formation from corner to corner. If time permits, fold canvas top and tie to windshield for added protection.

**(b)** Secure all equipment and cargo inside the vehicle with tape, nylon cord, or lashings. Remove antennas and stow inside vehicle.

**(c)** Ensure the fuel tank is not over 3/4 full. Inspect fuel tank cap, oil filler cap, and battery caps for proper installation.

**(d)** Engage the vehicle parking brake and put the transmission in neutral.

**(e)** Ensure the front wheels are pointed straight ahead. Tie down the steering wheel, using the securing device attached under the dashboard.

**(2) Rigging.** Rig the load according to the steps in Figure 2-11.

**(3) Hookup.** The hookup team stands in the bed of the vehicle. The static wand person discharges the static electricity with the static wand. The hookup person places the apex fitting onto the aircraft cargo hook. The hookup team then carefully dismounts the vehicle and remains close to the load as the helicopter removes slack from the sling legs. When successful hookup is assured, the hookup team quickly exits the area underneath the helicopter to the designated rendezvous point.

**(4) Derigging.** Derigging is the reverse of the preparation and rigging procedures in steps d (1) and d (2).

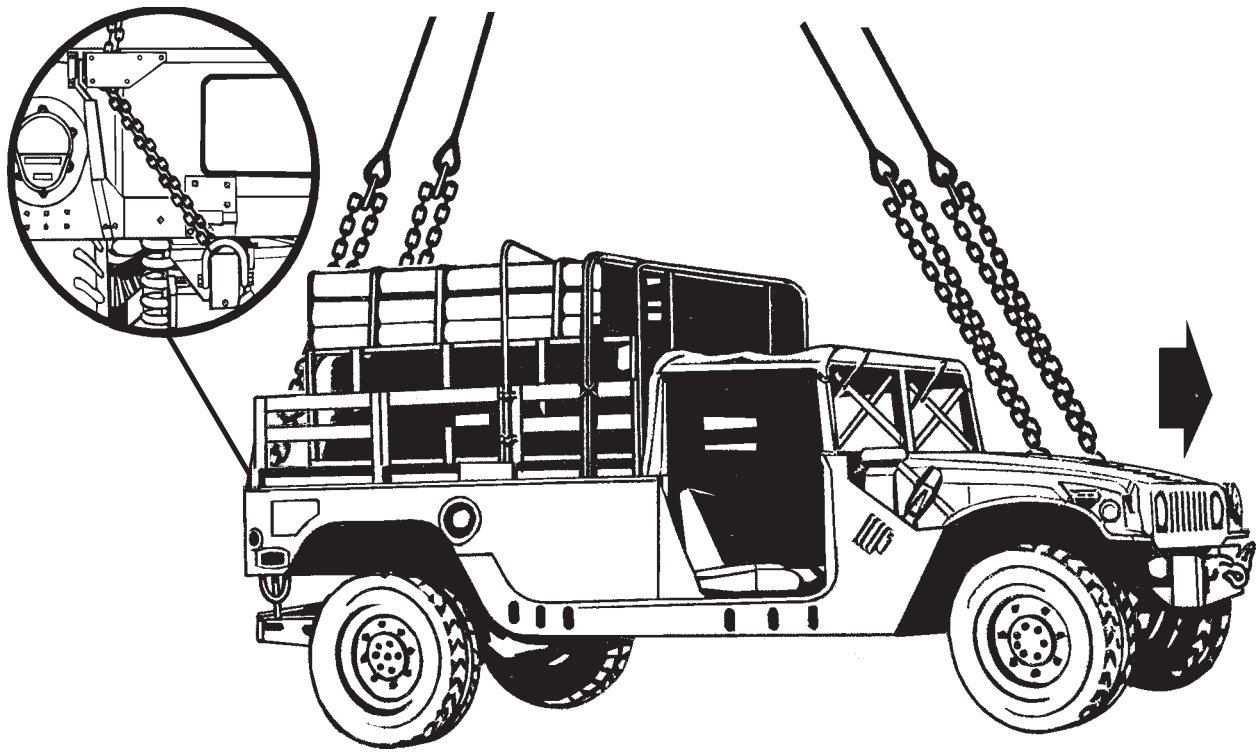

**RIGGING STEPS**

**1.** Position apex fitting in the bed of the vehicle. Route outer sling legs 1and 2 to the front of the vehicle and inner sling legs 3 and 4 to the rear. Sling legs 1 and 3 must be on the left side of the load.

**2.** Loop the chain end of sling leg 1 through the left front lift provision that protrudes through the hood. Place the correct link from Table 2-12 in the grab hook. Repeat with sling leg 2 and the right front lift provision. Secure excess chain with tape or Type III nylon cord.

**3.** Route the chain end of sling leg 3 through the eyelet opening in the upper left corner of the tailgate. Loop the chain end through the left lift provision on the bumper and thread back through the eyelet opening in the tailgate. Place the correct link from Table 2-12 in the grab hook. Repeat with sling leg 4 and the right rear lift provision. See insert above.

**4.** Cluster and tie or tape (breakaway technique) all sling legs together on top of the vehicle to prevent entanglement during hookup and lift-off.

***Figure 2-11. M998 (HMMWV) With Two MRC-127 Stacks***

## 2-14. M998/M1038 (HMMWV) With Lightweight Tactical Fire Control Systems (LTACFIRE)/Tactical Terminal Control System (TTCS)

**a. Applicability.** The following items in Table 2-13 are certified for all helicopters with suitable lift capacity by the US Army Natick Research, Development, and Engineering Center:

**Table 2-13. M998/M1038 With LTACFIRE or TTCS**

| NOMENCLATURE | MAX WEIGHT (POUNDS) | SLING SET | LINK COUNT FRONT/REAR | RECOMMENDED AIRSPEED (KNOTS) |
|---|---|---|---|---|
| LTACFIRE, Single Station | 5,927 | 10K | 80/45 | 90 |
| LTACFIRE, Dual Station | 6,215 | 10K | 80/45 | 90 |
| AN/TSQ-198 TTCS | 6,015 | 10K | 80/3 | 90 |

**b. Materials.** The following materials are required to rig this load:

**(1)** Sling set (10,000-pound capacity).

**(2)** Tape, adhesive, pressure-sensitive, 2-inch wide roll.

**(3)** Cord, nylon, Type III, 550-pound breaking strength.

**(4)** Webbing, cotton, 1/4-inch, 80-pound breaking strength.

**(5)** Felt sheet, cattle hair, Type IV, 1/2-inch or suitable padding.

**c. Personnel.** Two persons can prepare and rig this load in 20 minutes.

**d. Procedures.** The following procedures apply to this load:

**(1) Preparation.** Prepare the load using the following steps:

**(a)** Fold mirrors forward in front of the windshield for added protection and tie together with Type III nylon cord. Remove the canvas cab top and the doors. Fold the canvas top and stow securely inside the driver's compartment sandwiched between the doors.

**(b)** Secure all equipment and cargo inside the vehicle with tape, nylon cord, or lashings.

**(c)** Ensure the fuel tank is not over 3/4 full. Inspect fuel tank cap, oil filler cap, and battery caps for proper installation.

**(d)** Engage the vehicle parking brake and put the transmission in neutral.

**(e)** Ensure the front wheels are pointed straight ahead. Tie down the steering wheel, using the securing device attached under the dashboard.

**(f)** Tape the windshield in an X formation from corner to corner.

**(2) Rigging.** Rig the load according to the steps in Figure 2-12.

**(3) Hookup.** The hookup team stands in the bed of the vehicle. The static wand person discharges the static electricity with the static wand. The hookup person places the apex fitting onto the aircraft cargo hook. The hookup team then carefully dismounts the vehicle and remains close to the load as the helicopter removes slack from the sling legs. When successful hookup is assured, the hookup team quickly exits the area underneath the helicopter to the designated rendezvous point.

**(4) Derigging.** Derigging is the reverse of the preparation and rigging procedures in steps d (1) and d (2).

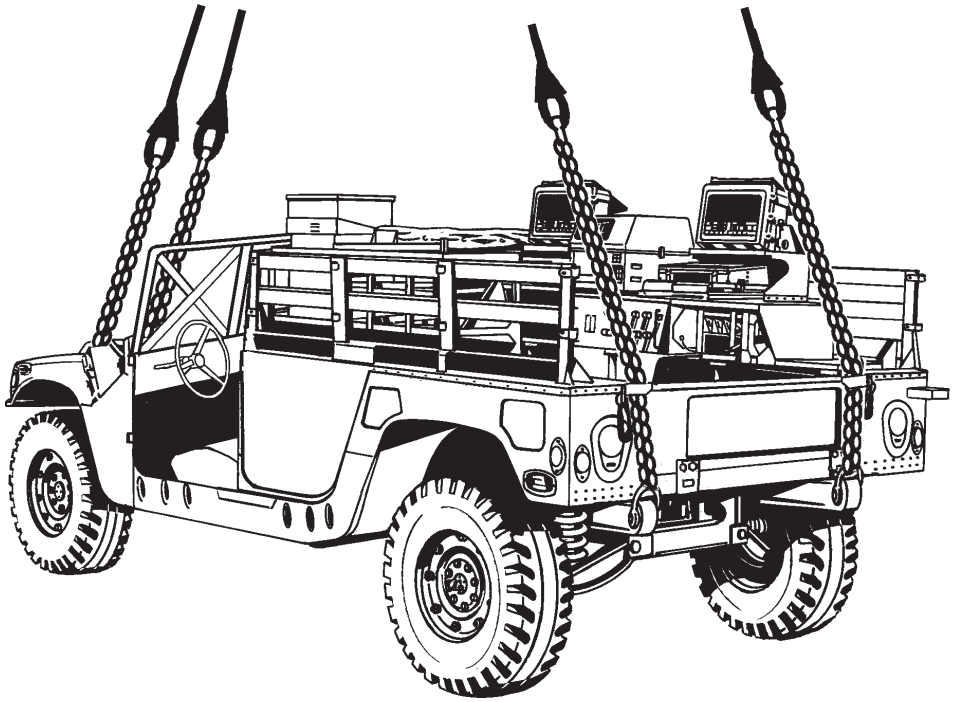

**RIGGING STEPS**

**1.** Position apex fitting in the bed of the vehicle. Route outer sling legs 1and 2 to the front of the vehicle and inner sling legs 3 and 4 to the rear. Sling legs 1 and 3 must be on the left side of the load.

**2.** Loop the chain end of sling leg 1 through the left front lift provision that protrudes through the hood. Place the correct link from Table 2-13 in the grab hook. Repeat with sling leg 2 and the right front lift provision. Secure excess chain with tape or Type III nylon cord.

**3.** Route the chain end of sling leg 3 through the eyelet opening in the upper left corner of the tailgate. Loop the chain end through the left lift provision on the bumper and thread back through the eyelet opening in the tailgate. Place the correct link from Table 2-13 in the grab hook. Repeat with sling leg 4 and the right rear lift provision. See insert above.

**4.** Cluster and tie or tape (breakaway technique) all sling legs together on top of the vehicle to prevent entanglement during hookup and lift-off.

*Figure 2-12. M998/M1038 (HMMWV) With Two Lightweight Tactical Fire Control Systems*

## 2-15. M1037 (HMMWV) With AN/TPQ-36 Firefinder Generator Pallet

**a. Applicability.** The following item in Table 2-14 is certified for all helicopters with suitable lift capacity by the US Army Natick Research, Development, and Engineering Center:

**Table 2-14. M1037 (HMMWV) With AN/TPQ-36 Firefinder Generator Pallet**

| NOMENCLATURE | MAX WEIGHT (POUNDS) | SLING SET | LINK COUNT FRONT/REAR | RECOMMENDED AIRSPEED (KNOTS) |
|---|---|---|---|---|
| ANTPQ-36 Firefinder Generator Pallet | 7,700 | 10K | 50/3 | 110 |

**b. Materials.** The following materials are required to rig this load:

**(1)** Sling set (10,000-pound capacity).

**(2)** Tape, adhesive, pressure-sensitive, 2-inch wide roll.

**(3)** Cord, nylon, Type III, 550-pound breaking strength.

**(4)** Webbing, cotton, 1/4-inch, 80-pound breaking strength.

**(5)** Felt sheet, cattle hair, Type IV, 1/2-inch or suitable padding.

**c. Personnel.** Two persons can prepare and rig this load in 15 minutes.

**d. Procedures.** The following procedures apply to this load:

**(1) Preparation.** Prepare the load using the following steps:

**(a)** Fold mirrors forward in front of the windshield for added protection and tie together with Type III nylon cord. Remove the cab doors.

**(b)** Ensure the generator is secured to the truck. Secure all lids, doors, and vents on the generator with tape or nylon Type III nylon cord. Safety tie all chains and hoses with 1/4-inch cotton webbing or tape.

**(c)** Secure all equipment and cargo inside the vehicle with tape, nylon cord, or lashings.

**(d)** Ensure the fuel tank is not over 3/4 full. Inspect fuel tank cap, oil filler cap, and battery caps for proper installation.

**(e)** Engage the vehicle parking brake and put the transmission in neutral.

**(f)** Ensure the front wheels are pointed straight ahead. Tie down the steering wheel, using the securing device attached under the dashboard.

**(g)** Tape the windshield in an X formation from corner to corner.

**(h)** Install the lift provisions on the outer ends of the rear bumper by removing the tiedown provisions located inboard of the bumper end and installing them on the outer ends of the rear bumper.

**(2) Rigging.** Rig the load according to the steps in Figure 2-13.

**(3) Hookup.** The hookup team stands in the bed of the vehicle. The static wand person discharges the static electricity with the static wand. The hookup person places the apex fitting onto the aircraft cargo hook. The hookup team then carefully dismounts the vehicle and remains close to the load as the helicopter removes slack from the sling legs. When successful hookup is assured, the hookup team quickly exits the area underneath the helicopter to the designated rendezvous point.

**(4) Derigging.** Derigging is the reverse of the preparation and rigging procedures in steps d (1) and d (2).

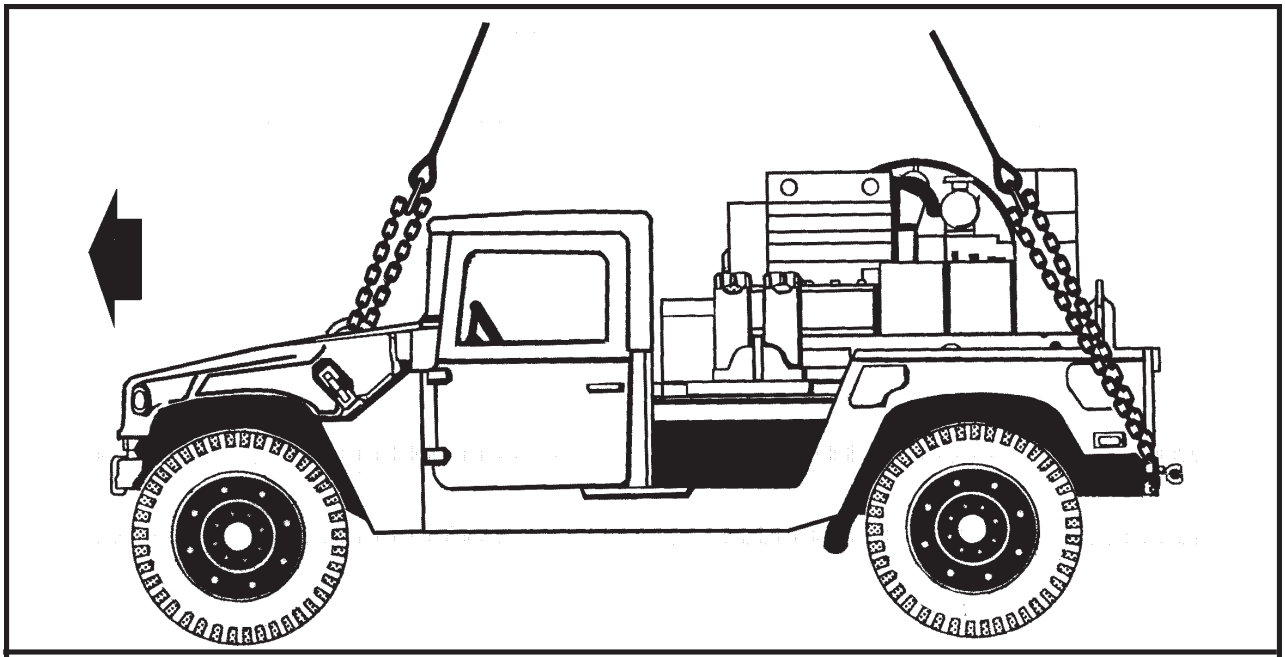

**RIGGING STEPS**

**1.** Position apex fitting on top of the vehicle. Route outer sling legs 1and 2 to the front of the vehicle and inner sling legs 3 and 4 to the rear. Sling legs 1 and 3 must be on the left side of the load.

**2.** Loop the chain end of sling leg 1 through the left front lift provision that protrudes through the hood from inboard to outboard. Place the correct link from Table 2-14 in the grab hook. Repeat with sling leg 2 and the right front lift provision. Secure excess chain with tape or Type III nylon cord.

**3.** Route the chain end of sling leg 3 through the lift provision located on the left end of the rear bumper from inboard to outboard. Place the correct link from Table 2-14 in the grab hook. Repeat with sling leg 4 and the right rear lift provision. Secure excess chain with tape or Type III nylon cord.

**4.** Wrap the rear slings with padding where they contact the vehicles sides.

**5.** Raise the apex fitting above the shelter carrier keeping the slings to the side of the shelter.

**6.** Cluster and tie or tape (breakaway technique) all sling legs together on top of the shelter to prevent entanglement during hookup and lift-off.

***Figure 2-13. M1037 (HMMWV) With AN/TPQ-36 Firefinder Generator Pallet***

**CAUTION**

**Do not use the lift shackles located near the center of the rear bumper for sling load lift provisions.**

## 2-16. M1097 (H-HMMWV) With Antenna AS-3036/TSC on OA-9134/TSC Pallet Group

**a. Applicability.** The following item in Table 2-15 is certified for all helicopters with suitable lift capacity by the US Army Natick Research, Development, and Engineering Center:

**Table 2-15. M1097 (H-HMMWV) With Antenna AS-3036/TSC on OA-9134/TSC Pallet Group**

| NOMENCLATURE | MAX WEIGHT (POUNDS) | SLING SET | LINK COUNT FRONT/REAR | RECOMMENDED AIRSPEED (KNOTS) |
|---|---|---|---|---|
| OA-9134/TSC Pallet Group, Antenna AS-3036/TSC on M1097 | 7,120 | 10K | 46/8 | 110 |

**b. Materials.** The following materials are required to rig this load:

**(1)** Sling set (10,000-pound capacity).

**(2)** Reach pendant (11,000-pound capacity).

**(3)** Tape, adhesive, pressure-sensitive, 2-inch wide roll.

**(4)** Cord, nylon, Type III, 550-pound breaking strength.

**(5)** Webbing, cotton, 1/4-inch, 80-pound breaking strength.

**(6)** Felt sheet, cattle hair, Type IV, 1/2-inch or suitable padding.

**(7)** Spreader bar assembly (component of the M996/M997 HMMWV Ambulance).

**c. Personnel.** Two persons can prepare and rig this load in 20 minutes.

**d. Procedures.** The following procedures apply to this load:

**(1) Preparation.** Prepare the load using the following steps:

**(a)** Fold mirrors forward in front of the windshield for added protection and tie together with Type III nylon cord. Remove the cab doors.

**(b)** Ensure the antenna support structure is secured to the truck. Secure all loose equipment within the antenna support structure with Type III nylon cord, tape, or lashings.

**(c)** Secure all equipment and cargo inside the vehicle with tape, nylon cord, or lashings.

**(d)** Ensure the fuel tank is not over 3/4 full. Inspect fuel tank cap, oil filler cap, and battery caps for proper installation.

**(e)** Engage the vehicle parking brake and put the transmission in neutral.

**(f)** Ensure the front wheels are pointed straight ahead. Tie down the steering wheel, using the securing device attached under the dashboard.

**(g)** Tape the windshield in an X formation from corner to corner.

**(h)** Install the lift provisions on the outer ends of the rear bumper by removing the tiedown provisions located inboard of the bumper end and installing them on the outer ends of the rear bumper.

**(2) Rigging.** Rig the load according to the steps in Figure 2-14.

**(3) Hookup.** The hookup team stands in the bed of the vehicle. The static wand person discharges the static electricity with the static wand. The hookup person places

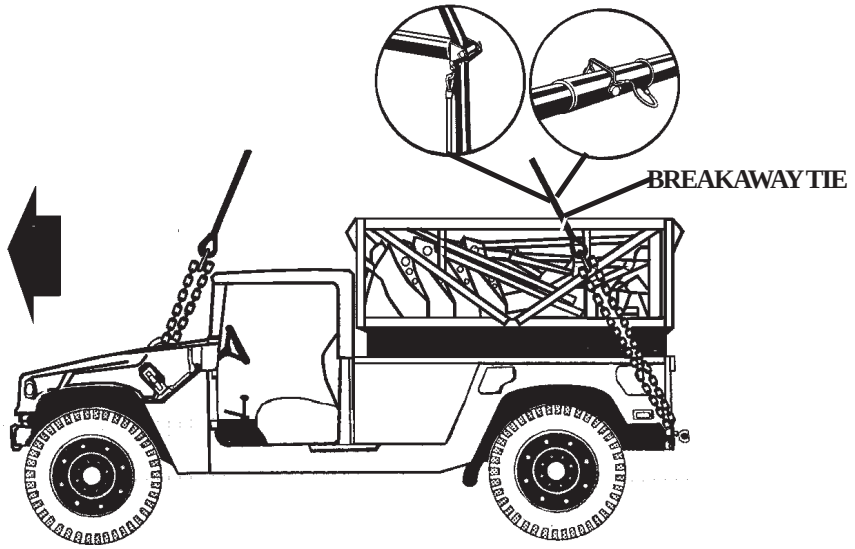


**RIGGING STEPS**

**1.** Install the reach pendant on the apex fitting of the sling set.

**2.** Position apex fitting and reach pendant on top of the antenna support structure assembly. Route outer sling legs 1and 2 to the front of the vehicle and inner sling legs 3 and 4 to the rear. Sling legs 1 and 3 must be on the left side of the load.

**3.** Loop the chain end of sling leg 1 through the left front lift provision that protrudes through the hood from inboard to outboard. Place the correct link from Table 2-15 in the grab hook. Repeat with sling leg 2 and the right front lift provision. Secure excess chain with tape or Type III nylon cord.

**4.** Position the spreader bar assembly 12 inches from the rear of the antenna support structure. Route the rear sling ropes through the guides on the end of the spreader bar. Secure the sling ropes in the guides with the retainer pins and keepers.

**5.** Route the chain end of sling leg 3 through the lift provision located on the left end of the rear bumper from inboard to outboard. Place the correct link from Table 2-15 in the grab hook. Repeat with sling leg 4 and the right rear lift provision. Secure excess chain with tape or Type III nylon cord.

**6.** Remove all slack from sling legs 3 and 4. Install a breakaway tie using 1/4-inch cotton webbing around each leg and around the top bar of the antenna support structure.

**CAUTION**

**Do not use Type III nylon cord to make the breakaway ties.**

**7.** Extend the spreader bar retainer cable down the length of the sling leg and secure to the chain with Type III nylon cord.

**8.** Cluster and tie or tape (breakaway technique) all sling legs together on top of the shelter to prevent entanglement during hookup and lift-off.

*Figure 2-14. M1097 (H-HMMWV) With AS-3036/TSC Antenna on OA-9134/TSC Pallet Group*

**CAUTION**

**Do not use the lift shackles located near the center of the rear bumper for sling load lift provisions.**

the apex fitting onto the aircraft cargo hook. The hookup team then carefully dismounts the vehicle and remains close to the load as the helicopter removes slack from the sling legs. When successful hookup is assured, the hookup team quickly exits the area underneath the helicopter to the designated rendezvous point.

**An aircrew member must monitor the spreader bar at all times. If there is any evidence of the spreader bar bending the load should be set down at the nearest suitable landing area.**

**(4) Derigging.** Derigging is the reverse of the preparation and rigging procedures in steps d (1) and d (2).

## 2-17. M1097 (H-HMMWV) With High Mobility Digital Group Multiplexer (DGM) Auxiliary Equipment Transportation Container (AETC) in 2 and 3 Mast Configurations

**a. Applicability.** The following items in Table 2-16 are certified for all helicopters with suitable lift capacity by the US Army Natick Research, Development, and Engineering Center:

**Table 2-16. M1097 (H-HMMWV) With High Mobility Digital Group Multiplexer (DGM) Auxiliary Equipment Transportation Container (AETC) in 2 and 3 Mast Configurations**

| NOMENCLATURE | MAX WEIGHT (POUNDS) | SLING SET | LINK COUNT FRONT/REAR | RECOMMENDED AIRSPEED (KNOTS) |
|---|---|---|---|---|
| 2 Mast AETC Configuration | 8,500 | 10K | 55/3 | 110 |
| 3 Mast AETC Configuration | 9,500 | 10K | 55/3 | 110 |

**b. Materials.** The following materials are required to rig this load:

**(1)** Sling set (10,000-pound capacity).

**(2)** Chain length, part number 38850-00053-101, from a 10,000-pound capacity sling set (4 each).

**(3)** Coupling link, part number 577-0615, from a 10,000-pound sling set (4 each).

**(4)** Tape, adhesive, pressure-sensitive, 2-inch wide roll.

**(5)** Cord, nylon, Type III, 550-pound breaking strength.

**(6)** Webbing, cotton, 1/4-inch, 80-pound breaking strength.

**(7)** Felt sheet, cattle hair, Type IV, 1/2-inch or suitable padding.

**c. Personnel.** Two persons can prepare and rig this load in 20 minutes.

**d. Procedures.** The following procedures apply to this load:

**(1) Preparation.** Prepare the load using the following steps:

**(a)** Fold mirrors forward in front of the windshield for added protection and tie together with Type III nylon cord. Remove the cab doors.

**(b)** Remove, fold, stow, and secure the canvas cover for the AETC using Type III nylon cord.

**(c)** Ensure the AETC is secured to the truck with wire rope or tie-down assemblies. Secure all equipment and cargo inside the AETC with tape, Type III nylon cord, and lashings.

**(d)** Secure all equipment and cargo inside the vehicle with tape, nylon cord, or lashings.

**(e)** Ensure the fuel tank is not over 3/4 full. Inspect fuel tank cap, oil filler cap, and battery caps for proper installation.

**(f)** Engage the vehicle parking brake and put the transmission in neutral.

**(g)** Ensure the front wheels are pointed straight ahead. Tie down the steering wheel, using the securing device attached under the dashboard.

**(h)** Tape the windshield in an X formation from corner to corner.

**(i)** Install the lift provisions on the outer ends of the rear bumper by removing the tiedown provisions located inboard of the bumper end and installing them on the outer ends of the rear bumper.

**(j)** Connect one additional chain length to each chain of the sling set with the coupling link.

**(2) Rigging.** Rig the load according to the steps in Figure 2-15.

**(3) Hookup.** The hookup team stands in the bed of the vehicle. The static wand person discharges the static electricity with the static wand. The hookup person places the apex fitting onto the aircraft cargo hook. The hookup team then carefully dismounts the vehicle and remains close to the load as the helicopter removes slack from the sling legs. When successful hookup is assured, the hookup team quickly exits the area underneath the helicopter to the designated rendezvous point.

**(4) Derigging.** Derigging is the reverse of the preparation and rigging procedures in steps d (1) and d (2).

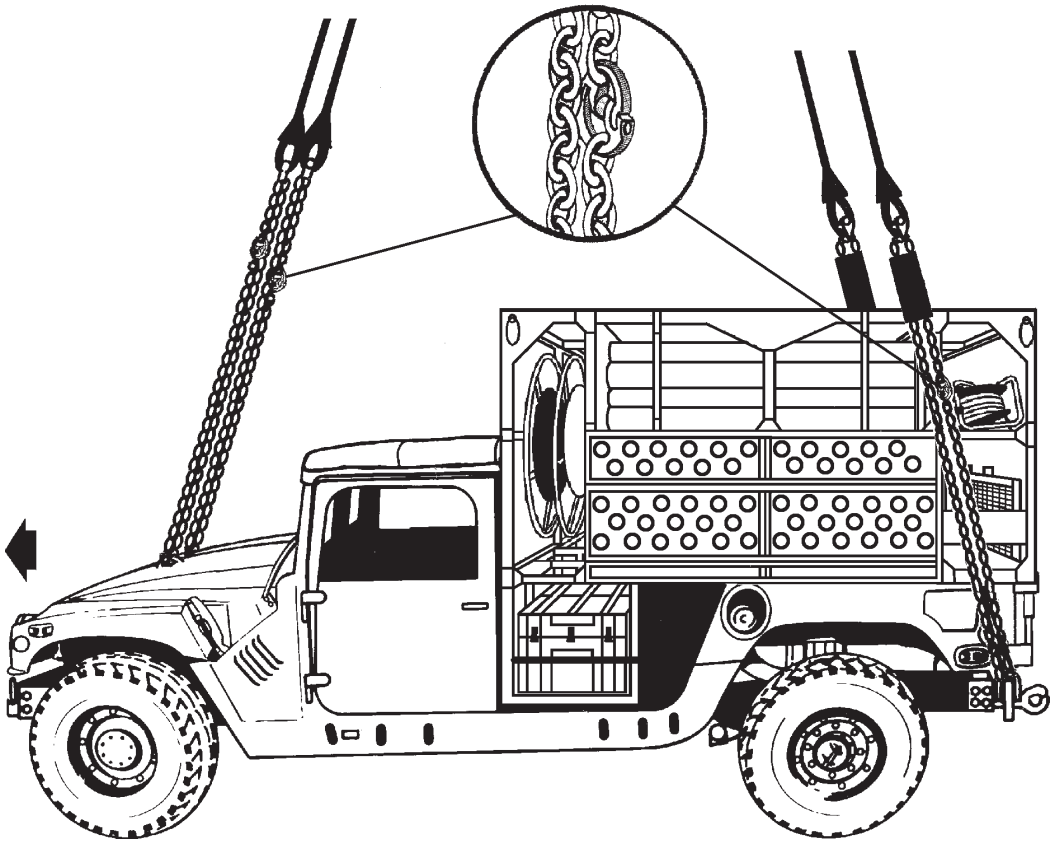

**RIGGING STEPS**

**1.** Position apex fitting on top of the shelter. Route outer sling legs 1and 2 to the front of the vehicle and inner sling legs 3 and 4 to the rear. Sling legs 1 and 3 must be on the left side of the load.

**2.** Loop the chain end of sling leg 1 through the left front lift provision that protrudes through the hood from inboard to outboard. Place the correct link from Table 2-16 in the grab hook. Repeat with sling leg 2 and the right front lift provision. Secure excess chain with tape or Type III nylon cord.

**3.** Route the chain end of sling leg 3 through the lift provision located on the left end of the rear bumper from inboard to outboard. Place the correct link from Table 2-16 in the grab hook. Repeat with sling leg 4 and the right rear lift provision. Pad the slings where they contact the frame. Secure excess chain with tape or Type III nylon cord.

**4.** Cluster and tie or tape (breakaway technique) all sling legs together on top of the shelter to prevent entanglement during hookup and lift-off.

*Figure 2-15. M1097 (H-HMMWV) With 2 or 3 Mast AETC Configuration*

**CAUTION**

**Do not use the lift shackles located near the center of the rear bumper for sling load lift provisions.**

## 2-18. M1097 (H-HMMWV) With Fiberglass Cargo Bed Cover (CBC)

**a. Applicability.** The following items in Table 2-17 are certified for all helicopters with suitable lift capacity by the US Army Soldier Systems Center:

**Table 2-17. M1097 (H-HMMWV) Fiberglass Cargo Bed Cover (CBC)**

| NOMENCLATURE | MAX WEIGHT (POUNDS) | SLING SET | LINK COUNT FRONT/REAR | RECOMMENDED AIRSPEED (KNOTS) |
|---|---|---|---|---|
| Cargo Bed Cover, HMMWV, Type I, Camoflage, NSN: 5411-01-647-32463 | 10,000 | 10K<br>15K | 50/3<br>62/2 | 90 |
| Cargo Bed Cover, HMMWV, Type I, Sand, NSN: 5411-01-479-1928 | 10,000 | 10K<br>15K | 50/3<br>62/2 | 90 |

**b. Materials.** The following materials are required to rig this load:

**(1)** Sling set (10,000-pound capacity).

**(a)** Chain length, part number 38850-00053-101, from a 10,000-pound capacity sling set (4 each).

**(b)** Coupling link, part number 577-0615, from a 10,000-pound sling set (4 each).

**OR**

**(2)** Multileg sling set (15,000-pound capacity for the CH-53E only).

**(a)** Additional chain lengths from the sling set being used (8 each).

**(b)** Additional coupling links from the sling set being used (8 each).

**(3)** Tape, adhesive, pressure-sensitive, 2-inch wide roll.

**(4)** Cord, nylon, Type III, 550-pound breaking strength.

**(5)** Webbing, cotton, 1/4-inch, 80-pound breaking strength.

**(6)** Felt sheet, cattle hair, Type IV, 1/2-inch or suitable padding.

**c. Personnel.** Two persons can prepare and rig this load in 15 minutes.

**d. Procedures.** The following procedures apply to this load:

**(1) Preparation.** Prepare the load using the following steps:

**(a)** Extend the sling leg chains by connecting one additional chain length to each chain on a 10,000-pound capacity sling set with coupling links. Connect two additional chain lengths to each chain on the 15,000-pound multileg sling set chain with coupling links.

**(b)** Fold mirrors forward in front of the windshield for added protection and tie together with Type III nylon cord.

**(c)** Secure the cargo bed cover to the truck using wire rope or tie-down assemblies.

**(d)** Secure all equipment inside the cargo bed cover with tape, nylon cord, or lashings; close and secure shelter vents and door with nylon cord or tape.

**(e)** Secure all equipment and cargo inside the vehicle with tape, nylon cord, or lashings. Secure the doors shut if installed.

**(f)** Ensure the fuel tank is not over 3/4 full. Inspect fuel tank cap, oil filler cap, and battery caps for proper installation.

**(g)** Engage the vehicle parking brake and put the transmission in neutral.

**(h)** Ensure the front wheels are pointed straight ahead. Tie down the steering wheel, using the securing device attached under the dashboard.

**(i)** Tape the windshield in an X formation from corner to corner.

**(j)** Install the lift provisions on the outer ends of the rear bumper by removing the tiedown provisions located inboard of the bumper end and installing them on the outer ends of the rear bumper.

**(2) Rigging.** Rig the load according to the steps in Figure 2-16.

**(3) Hookup.** The hookup team stands on top of the cargo bed cover. The static wand person discharges the static electricity with the static wand. The hookup person places the apex fitting onto the aircraft cargo hook. The hookup team then carefully dismounts the vehicle and remains close to the load as the helicopter removes slack from the sling legs. When successful hookup is assured, the hookup team quickly exits the area underneath the helicopter to the designated rendezvous point.

**(4) Derigging.** Derigging is the reverse of the preparation and rigging procedures in steps d (1) and d (2).

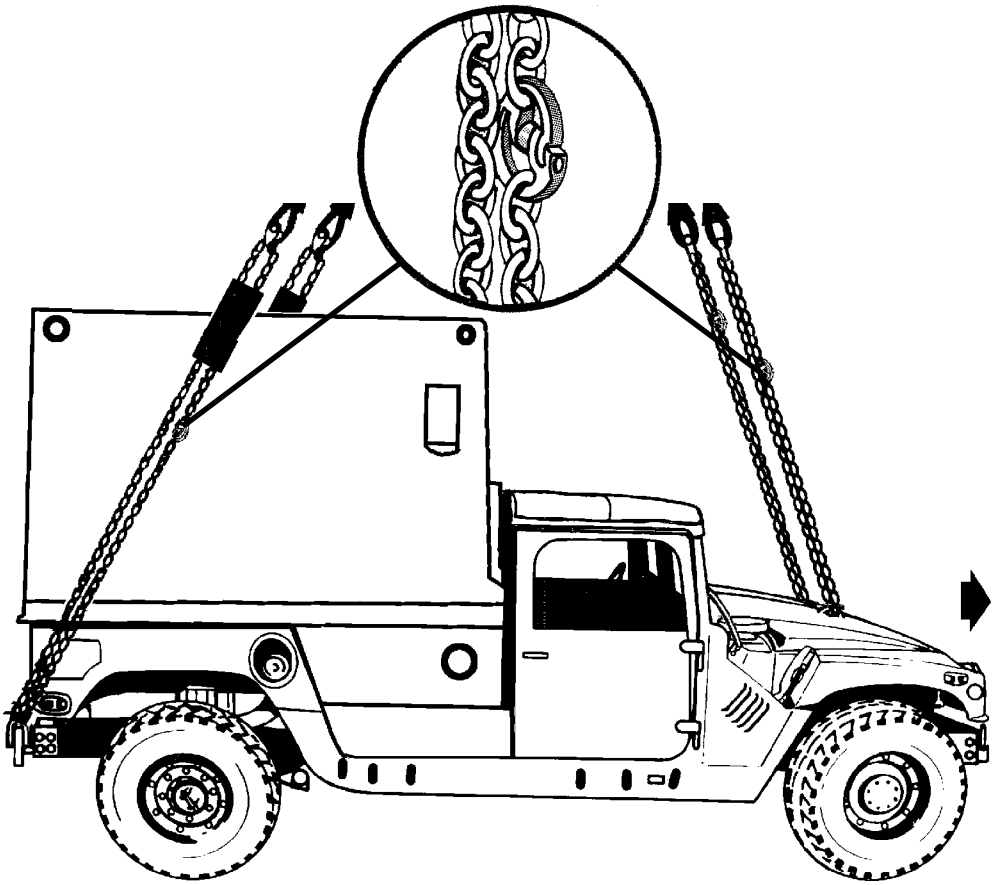

**RIGGING STEPS**

**1.** Position apex fitting on top of the cargo bed cover. Route outer sling legs 1and 2 to the front of the vehicle and inner sling legs 3 and 4 to the rear. Sling legs 1 and 3 must be on the left side of the load.

**2.** Loop the chain end of sling leg 1 through the left front lift provision that protrudes through the hood from inboard to outboard. Place the correct link from Table 2-17 in the grab hook. Repeat with sling leg 2 and the right front lift provision. Secure excess chain with tape or Type III nylon cord.

**3.** Route the chain end of sling leg 3 through the lift provision located on the left end of the rear bumper from inboard to outboard. Place the correct link from Table 2-17 in the grab hook. Repeat with sling leg 4 and the right rear lift provision. Secure excess chain with tape or Type III nylon cord.

**4.** Wrap the rear slings with padding where they contact the cover sides.

**5.** Raise the apex fitting above the shelter carrier keeping the slings to the side of the shelter.

**6.** Cluster and tie or tape (breakaway technique) all sling legs together on top of the shelter to prevent entanglement during hookup and lift-off.

*Figure 2-16. M1097 (H-HMMWV) With Fiberglass Cargo Bed Cover*

**CAUTION**

**Do not use the lift shackles located near the center of the rear bumper for sling load lift provisions.**

## 2-19. Light Armored Vehicle (LAV) (USMC)

**a. Applicability.** The following items in Table 2-18 are certified for all helicopters with suitable lift capacity by the US Army Soldier Systems Center:

**Table 2-18. Light Armored Vehicle (LAV)**

| NOMENCLATURE | MAX WEIGHT (POUNDS) | SLING SET | LINK COUNT FRONT/REAR | RECOMMENDED AIRSPEED (KNOTS) |
|---|---|---|---|---|
| Command and Control TAMCN E0946 | 27,060 | 40K | 3/20 | 95 |
| 25-MM, TAMCN E0947 | 28,200 | 40K | 25/3 | 85 |
| Logistics TAMCN E0948 | 28,200 | 40K | 3/10 | 90 |
| Mortar TAMCN E0949 | 27,400 | 40K | 25/3 | 95 |
| Recovery Unit TAMCN E0950 | 28,400 | 40K | 3/10 | 90 |
| Tow Anti-Tank TAMCN E0942 | 27,650 | 40K | 10/3 | 90 |

**b. Materials.** The following materials are required to rig this load:

**(1)** Sling set (40,000-pound capacity).

**(2)** Tape, adhesive, pressure-sensitive, 2-inch wide roll.

**(3)** Cord, nylon, Type III, 550-pound breaking strength.

**(4)** Webbing, cotton, 1/4-inch, 80-pound breaking strength.

**(5)** Felt sheet, cattle hair, Type IV, 1/2-inch or suitable padding.

**c. Personnel.** Two persons can prepare and rig this load in 15 minutes.

**d. Procedures.** The following procedures apply to this load:

**(1) Preparation.** Prepare the load using the following steps:

**(a)** Secure all loose items inside the LAV.

**(b)** Remove all antennae.

**(c)** Ensure the parking brake is set.

**(d)** Pad and tape all vision blocks, mirrors, and lights.

**(e)** Secure all hatches and panels.

**(f)** Ensure the boom is pinned down and tape the hydraulic cables. (Recovery Unit)

**(2) Rigging.** Rig the load according to the steps in Figure 2-17.

**(3) Hookup.** The hookup team stands on top of the vehicle. The static wand person discharges the static electricity with the static wand. The hookup person places the apex fitting onto the aircraft cargo hook. The hookup team then carefully dismounts the vehicle and remains close to the load as the helicopter removes slack from the sling legs. When successful hookup is assured, the hookup team quickly exits the area underneath the helicopter to the designated rendezvous point.

**(4) Derigging.** Derigging is the reverse of the preparation and rigging procedures in steps d (1) and d (2).

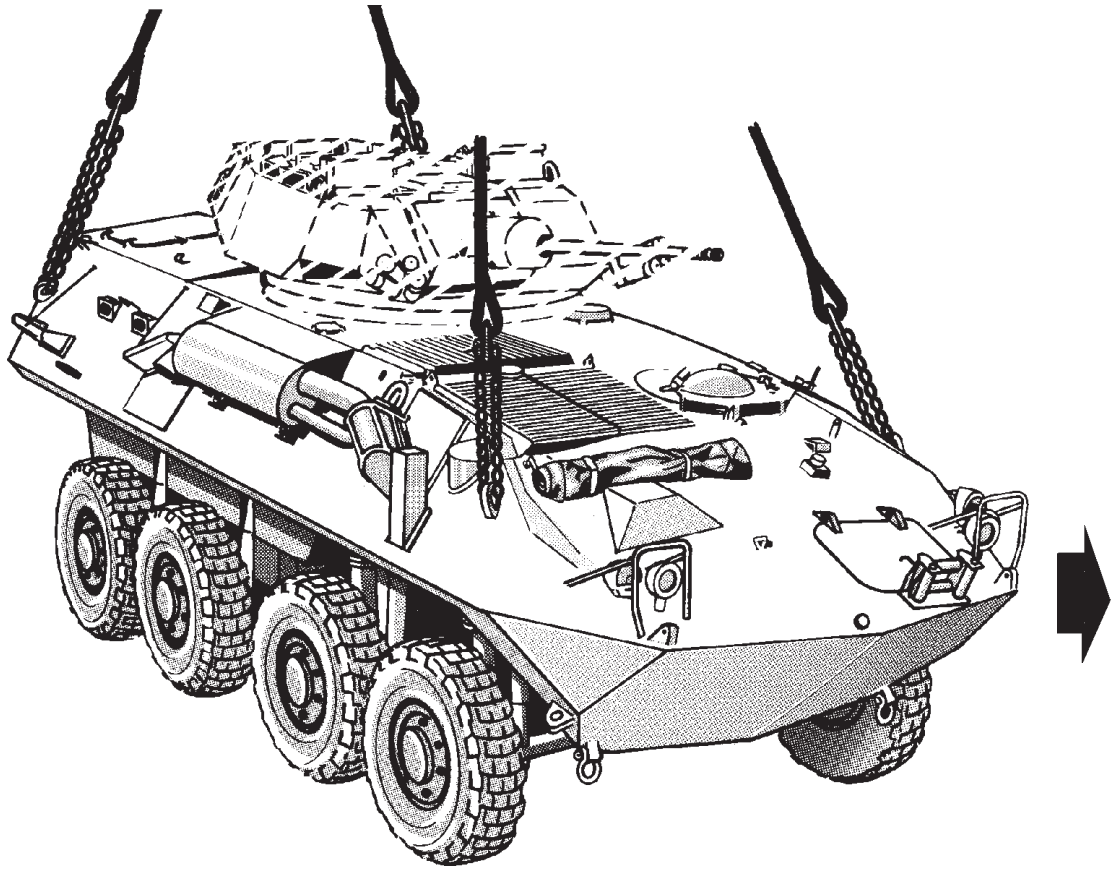

**RIGGING STEPS**

**1.** Position apex fitting on top of the vehicle. Route outer sling legs 1and 2 to the front of the vehicle and inner sling legs 3 and 4 to the rear. Sling legs 1 and 3 must be on the left side of the load.

**2.** Loop the chain end of sling leg 1 through the left front lift provision. Place the correct link from Table 2-18 in the grab hook. Repeat with sling leg 2 and the right front lift provision. Secure excess chain with tape or Type III nylon cord.

**3.** Route the chain end of sling leg 3 through the lift provision located on the left end of the rear bumper from inboard to outboard. Place the correct link from Table 2-18 in the grab hook. Repeat with sling leg 4 and the right rear lift provision. Secure excess chain with tape or Type III nylon cord.

**4.** Cluster and tie or tape (breakaway technique) all sling legs together on top of the LAV to prevent entanglement during hookup and lift-off.

***Figure 2-17. Light Armored Vehicle (LAV)***

## 2-20. M1097 (H-HMMWV) With AN/TPQ-42, Meteorological Hydrogen Generator (MHG)

**a. Applicability.** The following items in Table 2-19 are certified for all helicopters with suitable lift capacity by the US Army Natick Research, Development, and Engineering Center:

**Table 2-19. M1097 (H-HMMWV) With AN/TPQ-42, Meteorological Hydrogen Generator (MHG)**

| NOMENCLATURE | MAX WEIGHT (POUNDS) | SLING SET | LINK COUNT FRONT/REAR | RECOMMENDED AIRSPEED (KNOTS) |
|---|---|---|---|---|
| AN/TPQ-42, Meteorological Hydrogen Generator (MHG) | 10,000 | 10K | 80/45 | 120 |
| AN/TPQ-42, Meteorological Hydrogen Generator (MHG) | 10,000 | 15K | 25/3 | 120 |

**b. Materials.** The following materials are required to rig this load:

**(1)** Sling set (10,000-pound capacity).

**OR**

**(2)** Multileg sling set (15,000-pound capacity or for the CH-53E only).

**(3)** Tape, adhesive, pressure-sensitive, 2-inch wide roll.

**(4)** Cord, nylon, Type III, 550-pound breaking strength.

**(5)** Webbing, cotton, 1/4-inch, 80-pound breaking strength.

**c. Personnel.** Two persons can prepare and rig this load in 15 minutes.

**d. Procedures.** The following procedures apply to this load:

**(1) Preparation.** Prepare the load using the following steps:

**(a)** Fold mirrors forward in front of the windshield for added protection and tie together with Type III nylon cord.

**(b)** Secure all equipment and cargo inside the vehicle with tape, nylon cord, or lashings. Secure the doors shut if installed.

**(c)** Ensure the fuel tank is not over 3/4 full. Inspect fuel tank cap, oil filler cap, and battery caps for proper installation.

**(d)** Engage the vehicle parking brake and put the transmission in neutral.

**(e)** Ensure the front wheels are pointed straight ahead. Tie down the steering wheel, using the securing device attached under the dashboard.

**(2) Rigging.** Rig the load according to the steps in Figure 2-18.

**(3) Hookup.** The hookup team stands in the cargo bed. The static wand person discharges the static electricity with the static wand. The hookup person places the apex fitting onto the aircraft cargo hook. The hookup team then carefully dismounts the vehicle and remains close to the load as the helicopter removes slack from the sling legs. When successful hookup is assured, the hookup team quickly exits the area underneath the helicopter to the designated rendezvous point.

**(4) Derigging.** Derigging is the reverse of the preparation and rigging procedures in steps d (1) and d (2).

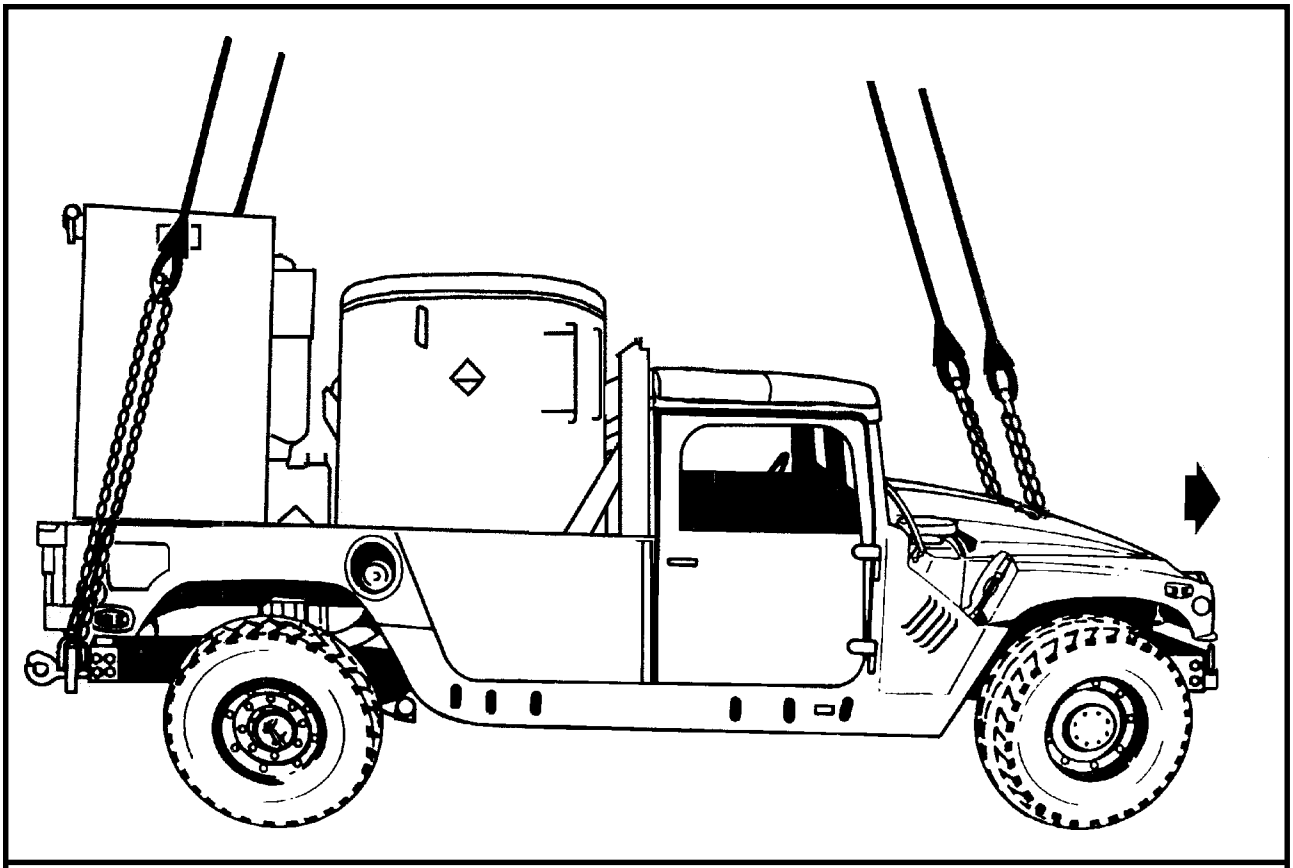

**RIGGING STEPS**

**1.** Position apex fitting on top of the vehicle. Route outer sling legs 1and 2 to the front of the vehicle and inner sling legs 3 and 4 to the rear. Sling legs 1 and 3 must be on the left side of the load.

**2.** Loop the chain end of sling leg 1 through the left front lift provision that protrudes through the hood from inboard to outboard. Place the correct link from Table 2-19 in the grab hook. Repeat with sling leg 2 and the right front lift provision. Secure excess chain with tape or Type III nylon cord.

**3.** Route the chain end of sling leg 3 through the lift provision located on the left end of the rear bumper from inboard to outboard. Place the correct link from Table 2-19 in the grab hook. Repeat with sling leg 4 and the right rear lift provision. Secure excess chain with tape or Type III nylon cord.

**4.** Cluster and tie or tape (breakaway technique) all sling legs together on top of the shelter to prevent entanglement during hookup and lift-off.

***Figure 2-18. M1097 (H-HMMWV) With AN/TPQ-42, Meteorological Hydrogen Generator (MHG)***

## 2-21. M1097/M1113 Shelter Carrier (HMMWV) With Gitchner Model 1497A Shelter

**a. Applicability.** The following items in Table 2-20 are certified for all helicopters with suitable lift capacity by the US Army Soldier Systems Center:

**Table 2-20. M1097/M1113 Shelter Carrier (HMMWV) With Gitchner Model 1497A Shelter**

| NOMENCLATURE | MAX WEIGHT (POUNDS) | SLING SET | LINK COUNT FRONT/REAR | RECOMMENDED AIRSPEED (KNOTS) |
|---|---|---|---|---|
| Joint Tactical Information Distribution System (JTIDS), AN/TYQ-JTIDS Shelter on M1097 HMMWV | 10,000 | 10K | 30/3 | 120 |
| AN/TSM-210 Electronic Shop on Enhanced Capacity Vehicle, M1113 HMMWV | 10,360 | 25K | 22/46 | 120 |

**b. Materials.** The following materials are required to rig this load:

**(1)** Sling set (10,000-pound capacity).

**(a)** Chain length, part number 38850-00053-101, from a 10,000-pound capacity sling set (4 each).

**(b)** Coupling link, part number 577-0615, from a 10,000-pound capacity sling set (4 each).

**OR**

**(2)** Sling set (25,000-pound capacity).

**(a)** Chain length, part number 38850-00053-102, from a 25,000-pound capacity sling set (4 each).

**(b)** Coupling link, part number 664241, from a 25,000-pound capacity sling set (4 each).

**(3)** Tape, adhesive, pressure-sensitive, 2-inch wide roll.

**(4)** Cord, nylon, Type III, 550-pound breaking strength.

**(5)** Webbing, cotton, 1/4-inch, 80-pound breaking strength.

**(6)** Felt sheet, cattle hair, Type IV, 1/2-inch or suitable padding.

**(7)** Padding, cellulose.

**c. Personnel.** Two persons can prepare and rig this load in 15 minutes.

**d. Procedures.** The following procedures apply to this load:

**(1) Preparation.** Prepare the load using the following steps:

**(a)** Extend the sling leg chains by connecting one additional chain length to each chain on a 10,000- or 25,000-pound capacity sling set with coupling links.

**(b)** Fold mirrors forward in front of the windshield for added protection and tie together with Type III nylon cord.

**(c)** Secure the shelter to the truck using wire rope or tie-down assemblies.

**(d)** Secure all equipment inside the shelter with tape, nylon cord, or lashings. Close and secure all shelter doors and vents with tape or Type III nylon cord.

**(e)** Secure the environmental control unit cover with duct tape.

**(f)** Disconnect the power cord from the rear panel and secure it to the rear platform with Type III nylon cord. Lower the power panel door and secure it.

**(g)** Secure all equipment and cargo inside the vehicle with tape, nylon cord, or lashings. Secure the doors shut if installed.

**(h)** Ensure the fuel tank is not over 3/4 full. Inspect fuel tank cap, oil filler cap, and battery caps for proper installation.

**(i)** Engage the vehicle parking brake and put the transmission in neutral.

**(j)** Ensure the front wheels are pointed straight ahead. Tie down the steering wheel, using the securing device attached under the dashboard.

**(k)** Tape the windshield in an X formation from corner to corner.

**(l)** Install the lift provisions on the outer ends of the rear bumper by removing the tiedown provisions located inboard of the bumper end and installing them on the outer ends of the rear bumper.

**(2) Rigging.** Rig the load according to the steps in Figure 2-19.

**NOTE: Hookup of this load presents substantial risk of damage to the load or injury to the hookup personnel. Use of a reach pendant is recommended for this load.**

**(3) Hookup.** The hookup team stands on top of the shelter. The static wand person discharges the static electricity with the static wand. The hookup person places the apex fitting onto the aircraft cargo hook. The hookup team then carefully dismounts the vehicle and remains close to the load as the helicopter removes slack from the sling legs. When successful hookup is assured, the hookup team quickly exits the area underneath the helicopter to the designated rendezvous point.

**(4) Derigging.** Derigging is the reverse of the preparation and rigging procedures in steps d (1) and d (2).

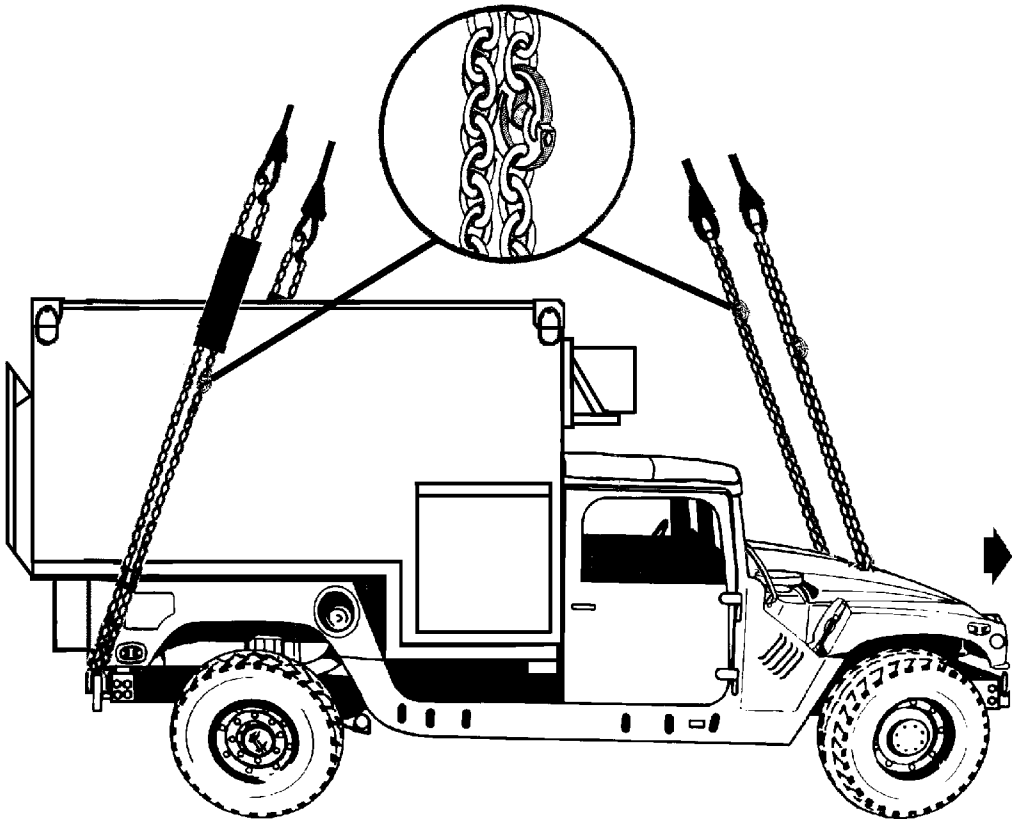

**RIGGING STEPS**

**1.** Position apex fitting on top of the vehicle. Route outer sling legs 1and 2 to the front of the vehicle and inner sling legs 3 and 4 to the rear. Sling legs 1 and 3 must be on the left side of the load.

**2.** Loop the chain end of sling leg 1 through the left front lift provision that protrudes through the hood from inboard to outboard. Place the correct link from Table 2-20 in the grab hook. Repeat with sling leg 2 and the right front lift provision. Secure excess chain with tape or Type III nylon cord.

**3.** Route the chain end of sling leg 3 through the lift provision located on the left end of the rear bumper from inboard to outboard. Place the correct link from Table 2-20 in the grab hook. Repeat with sling leg 4 and the right rear lift provision.

**4.** Cluster and tie or tape (breakaway technique) all sling legs together on top of the shelter to prevent entanglement during hookup and lift-off.

***Figure 2-19. M1097/M1113 Shelter Carrier (HMMWV) With Gitchner Model 1497A Shelter***

## 2-22. M1097 (HMMWV) With Contact Maintenance Truck, Heavy (CMTH)

**a. Applicability.** The following item in Table 2-21 is certified for all helicopters with suitable lift capacity by the US Army Soldier Systems Center:

**Table 2-21. M1097 (HMMWV) With Contact Maintenance Truck, Heavy (CMTH)**

| NOMENCLATURE | MAX WEIGHT (POUNDS) | SLING SET | LINK COUNT FRONT/REAR | RECOMMENDED AIRSPEED (KNOTS) |
|---|---|---|---|---|
| CMTH, Aviation Section (AS) | 9,400 | 10K | 80/30 | 120 |

**b. Materials.** The following materials are required to rig this load:

**(1)** Sling set (10,000-pound capacity).

**(a)** Chain length, part number 38850-00053-101, from a 10,000-pound capacity sling set (4 each).

**(b)** Coupling link, part number 577-0615, from a 10,000-pound capacity sling set (4 each).

**(2)** Tape, adhesive, pressure-sensitive, 2-inch wide roll.

**(3)** Cord, nylon, Type III, 550-pound breaking strength.

**(4)** Webbing, cotton, 1/4-inch, 80-pound breaking strength.

**(5)** Felt sheet, cattle hair, Type IV, 1/2-inch or suitable padding.

**(6)** Spreader bar assembly (component of the M996/M997 HMMWV Ambulance).

**c. Personnel.** Two persons can prepare and rig this load in 15 minutes.

**d. Procedures.** The following procedures apply to this load:

**(1) Preparation.** Prepare the load using the following steps:

**(a)** Extend the sling leg chains by connecting one additional chain length to each chain using the coupling links.

**(b)** Fold mirrors forward in front of the windshield for added protection and tie together with Type III nylon cord.

**(c)** Ensure the shelter is properly attached to the truck.

**(d)** Secure all equipment inside the shelter with tape, nylon cord, or lashings. Close and secure all doors.

**(e)** Secure the environmental control unit cover with duct tape.

**(f)** Secure all equipment and cargo inside the vehicle with tape, nylon cord, or lashings. Secure the doors in the shelter or in the cab of the vehicle.

**(g)** Ensure the fuel tank is not over 3/4 full. Inspect fuel tank cap, oil filler cap, and battery caps for proper installation.

**(h)** Engage the vehicle parking brake and put the transmission in neutral.

**(i)** Ensure the front wheels are pointed straight ahead. Tie down the steering wheel, using the securing device attached under the dashboard.

**(j)** Tape the windshield in an X formation from corner to corner.

**(k)** Install the lift provisions on the outer ends of the rear bumper by removing the tiedown provisions located inboard of the bumper end and installing them on the outer ends of the rear bumper.

**(2) Rigging.** Rig the load according to the steps in Figure 2-20.

**(3) Hookup.** The hookup team stands on top of the shelter. The static wand person discharges the static electricity with the static wand. The hookup person places the apex fitting onto the aircraft cargo hook. The hookup team then carefully dismounts the vehicle and remains close to the load as the helicopter removes slack from the sling legs. When successful hookup is assured, the hookup team quickly exits the area underneath the helicopter to the designated rendezvous point.

**(4) Derigging.** Derigging is the reverse of the preparation and rigging procedures in steps d (1) and d (2).

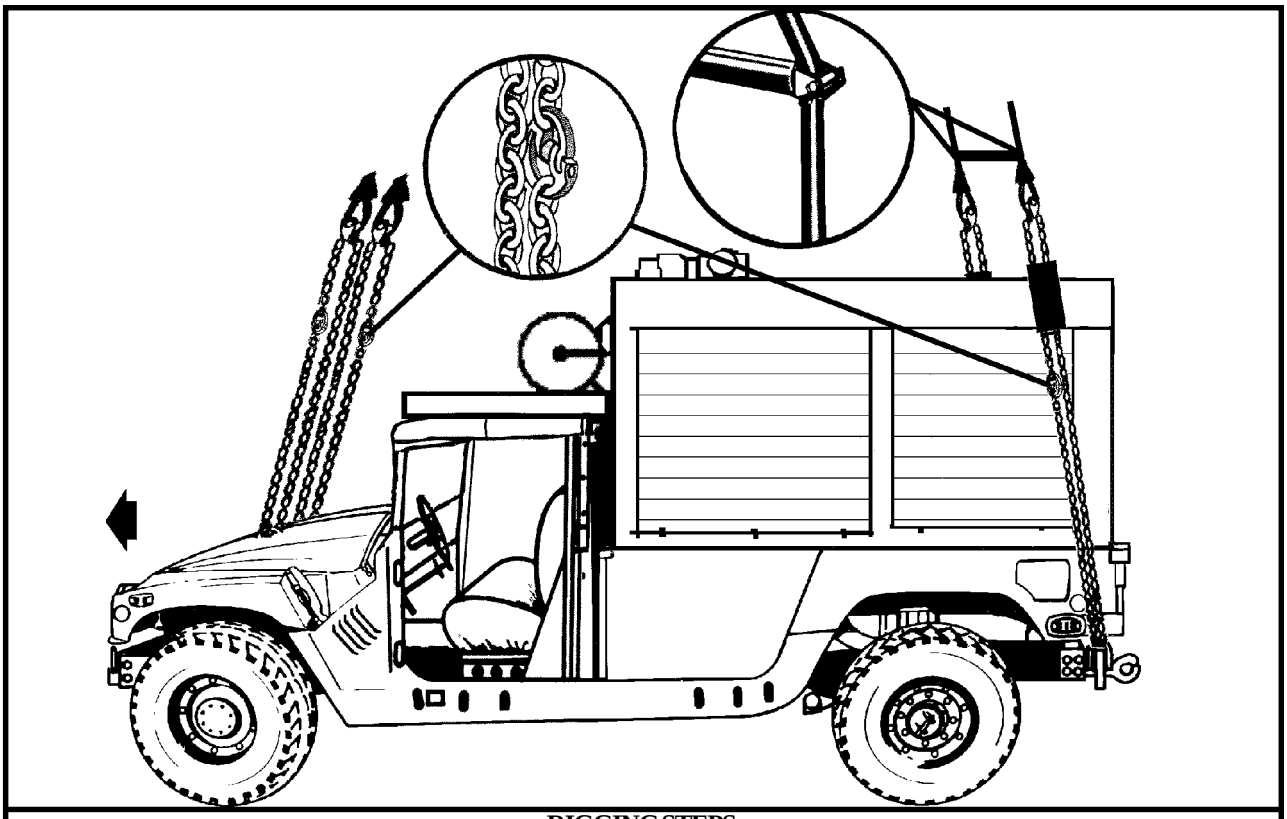

**RIGGING STEPS**

**1.** Position apex fitting on top of the vehicle. Route outer sling legs 1and 2 to the front of the vehicle and inner sling legs 3 and 4 to the rear. Sling legs 1 and 3 must be on the left side of the load.

**2.** Loop the chain end of sling leg 1 through the left front lift provision that protrudes through the hood from inboard to outboard. Place the correct link from Table 2-21 in the grab hook. Repeat with sling leg 2 and the right front lift provision. Secure excess chain with tape or Type III nylon cord.

**3.** Position the spreader bar assembly 12 to18 inches forward of the rear of the shelter. Route the rear sling legs through guides on the end of the spreader bar and install the pins and keepers.

**4.** Route the chain end of sling leg 3 through the lift provision located on the left end of the rear bumper from inboard to outboard. Place the correct link from Table 2-21 in the grab hook. Repeat with sling leg 4 and the right rear lift provision.

**5.** Secure the spreader bar retainer cable to the sling leg chain.

**6.** Cluster and tie or tape (breakaway technique) all sling legs together on top of the shelter to prevent entanglement during hookup and lift-off.

*Figure 2-20. M1097 (HMMWV) With Contact Maintenance Truck, Heavy (CMTH)*

## 2-23. M1097 (HMMWV) With Enhanced Fiber Optic Guided Missile (EFOGM) Launcher

**a. Applicability.** The following item in Table 2-22 is certified for all helicopters with suitable lift capacity by the US Army Soldier Systems Center:

**Table 2-22. M1097 (HMMWV) With Enhanced Fiber Optic Guided Missile (EFOGM) Launcher**

| NOMENCLATURE | MAX WEIGHT (POUNDS) | SLING SET | LINK COUNT FRONT/REAR | RECOMMENDED AIRSPEED (KNOTS) |
|---|---|---|---|---|
| Enhanced Fiber Optic Guided Missile (EFOGM) Launcher with Six Missiles | 9,100 | 10K | 55/3 | 90 |

**b. Materials.** The following materials are required to rig this load:

**(1)** Sling set (10,000-pound capacity).

**(2)** Tape, adhesive, pressure-sensitive, 2-inch wide roll.

**(3)** Cord, nylon, Type III, 550-pound breaking strength.

**(4)** Webbing, cotton, 1/4-inch, 80-pound breaking strength.

**(5)** Felt sheet, cattle hair, Type IV, 1/2-inch or suitable padding.

**c. Personnel.** Two persons can prepare and rig this load in 15 minutes.

**d. Procedures.** The following procedures apply to this load:

**(1) Preparation.** Prepare the load using the following steps:

**(a)** Fold mirrors forward in front of the windshield for added protection and tie together with Type III nylon cord.

**(b)** Ensure the launcher is properly attached to the truck. Secure all wiring and loose equipment with hold-down straps, tape, or Type III nylon cord.

**(c)** Secure all equipment and cargo inside the vehicle with tape, nylon cord, or lashings. Remove and secure the doors in the cab of the vehicle.

**(d)** Ensure the fuel tank is not over 3/4 full. Inspect fuel tank cap, oil filler cap, and battery caps for proper installation.

**(e)** Engage the vehicle parking brake and put the transmission in neutral.

**(f)** Ensure the front wheels are pointed straight ahead. Tie down the steering wheel, using the securing device attached under the dashboard.

**(g)** Tape the windshield in an X formation from corner to corner. Tape all mirrors, lights and gauges.

**(h)** Remove the third missile from each side counting inwards from the outside edges.

**(2) Rigging.** Rig the load according to the steps in Figure 2-21.

**(3) Hookup.** The hookup team stands on EFOGM vehicle. The static wand person discharges the static electricity with the static wand. The hookup person places the apex fitting onto the aircraft cargo hook. The hookup team then carefully dismounts the vehicle and remains close to the load as the helicopter removes slack from the sling legs. When successful hookup is assured, the hookup team quickly exits the area underneath the helicopter to the designated rendezvous point.

**(4) Derigging.** Derigging is the reverse of the preparation and rigging procedures in steps d (1) and d (2).

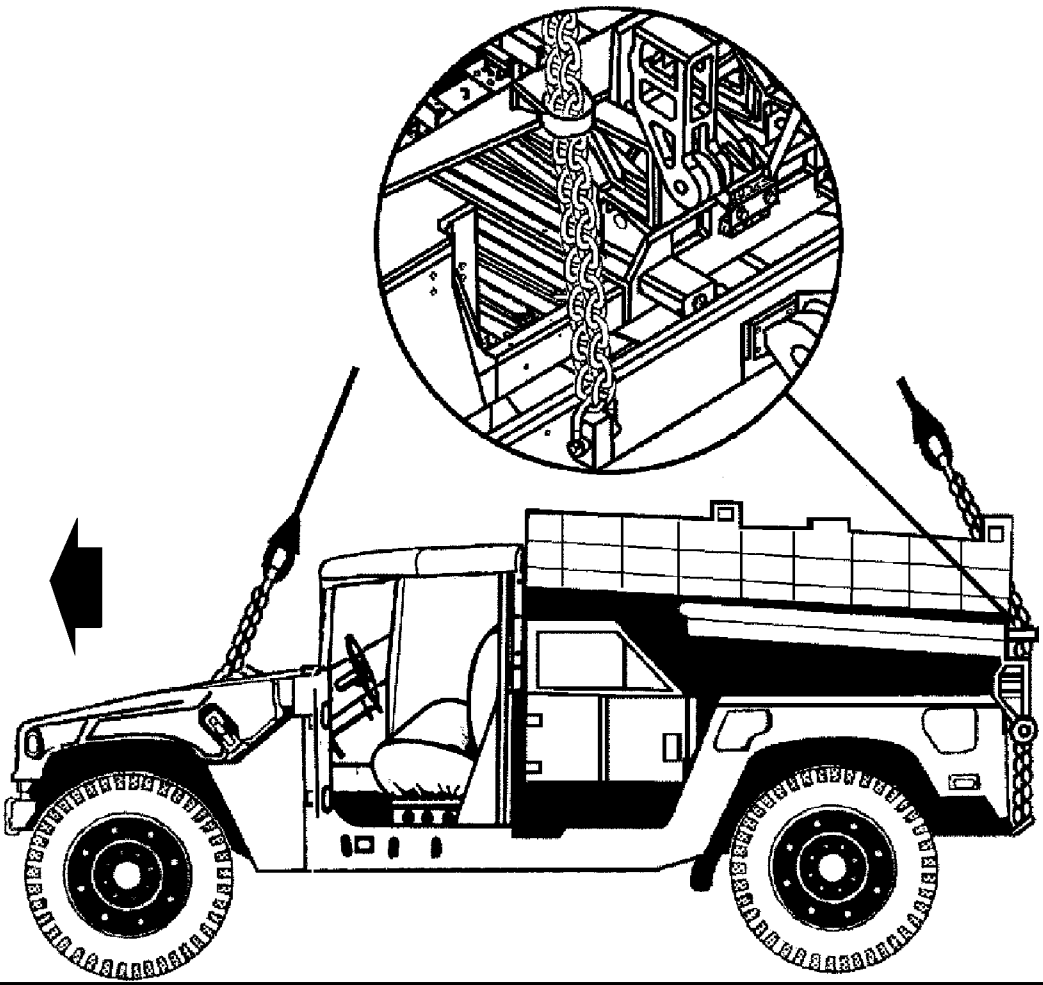

**RIGGING STEPS**

**1.** Position apex fitting on top of the vehicle. Route outer sling legs 1and 2 to the front of the vehicle and inner sling legs 3 and 4 to the rear. Sling legs 1 and 3 must be on the left side of the load.

**2.** Loop the chain end of sling leg 1 through the left front lift provision that protrudes through the hood from inboard to outboard. Place the correct link from Table 2-22 in the grab hook. Repeat with sling leg 2 and the right front lift provision. Secure excess chain with tape or Type III nylon cord.

**3.** Route the chain end of sling leg 3 through the sling guide located on the aft end of the launcher frame. Loop the chain end through the left lift provision on the bumper and thread back through the sling guide. Place the correct link from Table 2-22 in the grab hook. Repeat with sling leg 4 and the right rear lift provision. See insert above.

**4.** Pad the chains where they contact the sling guides and the missile sides.

**5.** Cluster and tie or tape (breakaway technique) all sling legs together on top of the shelter to prevent entanglement during hookup and lift-off.

***Figure 2-21. M1097 (HMMWV) With Enhanced Fiber Optic Guided Missile (EFOGM) Launcher***

## 2-24. M1097 (HMMWV) With Sentinel AN/MPQ-64 Tactical Quiet Generator (TQG)

**a. Applicability.** The following item in Table 2-23 is certified for all helicopters with suitable lift capacity by the US Army Soldier Systems Center:

**Table 2-23. M1097 (HMMWV) With Sentinel AN/MPQ-64 Tactical Quiet Generator (TQG)**

| NOMENCLATURE | MAX WEIGHT (POUNDS) | SLING SET | LINK COUNT FRONT/REAR | RECOMMENDED AIRSPEED (KNOTS) |
|---|---|---|---|---|
| M1097 (HMMWV) With Sentinel AN/MPQ-64 Tactical Quiet Generator (TQG) | 7,800 | 10K | 80/3 | 120 |

**b. Materials.** The following materials are required to rig this load:

**(1)** Sling set (10,000-pound capacity).

**(2)** Tape, adhesive, pressure-sensitive, 2-inch wide roll.

**(3)** Cord, nylon, Type III, 550-pound breaking strength.

**(4)** Webbing, cotton, 1/4-inch, 80-pound breaking strength.

**c. Personnel.** Two persons can prepare and rig this load in 10 minutes.

**d. Procedures.** The following procedures apply to this load:

**(1) Preparation.** Prepare the load using the following steps:

**(a)** Fold mirrors forward in front of the windshield for added protection and tie together with Type III nylon cord.

**(b)** Secure all equipment and cargo inside the vehicle with tape, nylon cord, or lashings. Remove and secure the doors in the cab of the vehicle.

**(c)** Ensure the fuel tank is not over 3/4 full. Inspect fuel tank cap, oil filler cap, and battery caps for proper installation.

**(d)** Engage the vehicle parking brake and put the transmission in neutral.

**(e)** Ensure the front wheels are pointed straight ahead. Tie down the steering wheel, using the securing device attached under the dashboard.

**(f)** Install the lift provisions on the outer ends of the rear bumper by removing the tiedown provisions located inboard of the bumper end and installing them on the outer ends of the rear bumper.

**(g)** Tape the windshield in an X formation from corner to corner. Tape all mirrors, lights and gauges. Remove and secure the rear cabin window.

**(2) Rigging.** Rig the load according to the steps in Figure 2-22.

**(3) Hookup.** The hookup team stands on the vehicle bed. The static wand person discharges the static electricity with the static wand. The hookup person places the apex fitting onto the aircraft cargo hook. The hookup team then carefully dismounts the vehicle and remains close to the load as the helicopter removes slack from the sling legs. When successful hookup is assured, the hookup team quickly exits the area underneath the helicopter to the designated rendezvous point.

**(4) Derigging.** Derigging is the reverse of the preparation and rigging procedures in steps d (1) and d (2).

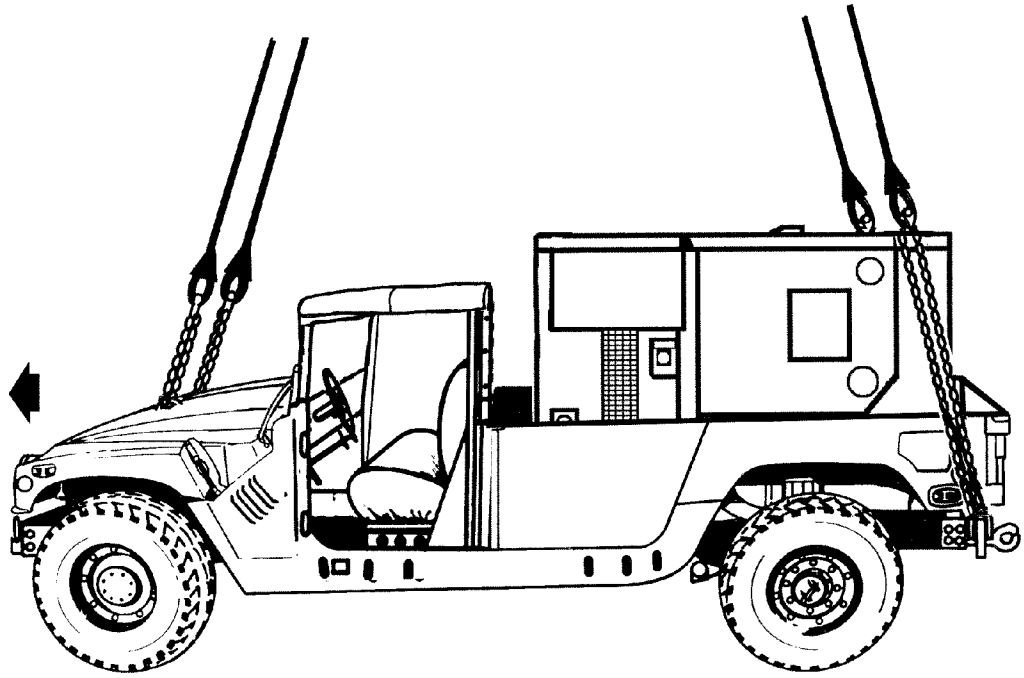

**RIGGING STEPS**

**1.** Position apex fitting on top of the vehicle. Route outer sling legs 1and 2 to the front of the vehicle and inner sling legs 3 and 4 to the rear. Sling legs 1 and 3 must be on the left side of the load.

**2.** Loop the chain end of sling leg 1 through the left front lift provision that protrudes through the hood from inboard to outboard. Place the correct link from Table 2-23 in the grab hook. Repeat with sling leg 2 and the right front lift provision. Secure excess chain with tape or Type III nylon cord.

**3.** Route the chain end of sling leg 3 through the lift provision located on the left end of the rear bumper from inboard to outboard. Place the correct link from Table 2-23 in the grab hook. Repeat with sling leg 4 and the right rear lift provision.

**4.** Cluster and tie or tape (breakaway technique) all sling legs together on top of the shelter to prevent entanglement during hookup and lift-off.

***Figure 2-22. M1097 (HMMWV) With Sentinel AN/MPQ-64 Tactical Quiet Generator (TQG)***

## 2-25. M1097A2 (HMMWV) With Secure Mobile Anti-Jam Tactical Terminal (SMART-T) Pallet

**a. Applicability.** The following item in Table 2-24 is certified for all helicopters with suitable lift capacity by the US Army Soldier Systems Center:

**Table 2-24. M1097A2 (HMMWV) With Secure Mobile Anti-Jam Tactical Terminal (SMART-T) Pallet**

| NOMENCLATURE | MAX WEIGHT (POUNDS) | SLING SET | LINK COUNT FRONT/REAR | RECOMMENDED AIRSPEED (KNOTS) |
|---|---|---|---|---|
| M1097A2 (HMMWV) With Secure Mobile Anti-Jam Tactical Terminal (SMART-T) Pallet | 8,540 | 10K | 30/3 | 100 |

**b. Materials.** The following materials are required to rig this load:

**(1)** Sling set (10,000-pound capacity).

**(2)** Tape, adhesive, pressure-sensitive, 2-inch wide roll.

**(3)** Cord, nylon, Type III, 550-pound breaking strength.

**(4)** Webbing, cotton, 1/4-inch, 80-pound breaking strength.

**c. Personnel.** Two persons can prepare and rig this load in 10 minutes.

**d. Procedures.** The following procedures apply to this load:

**(1) Preparation.** Prepare the load using the following steps:

**(a)** Fold mirrors forward in front of the windshield for added protection and tie together with Type III nylon cord.

**(b)** Secure all equipment and cargo inside the vehicle with tape, nylon cord, or lashings. Remove and secure the doors in the cab of the vehicle.

**(c)** Ensure the fuel tank is not over 3/4 full. Inspect fuel tank cap, oil filler cap, and battery caps for proper installation.

**(d)** Engage the vehicle parking brake and put the transmission in neutral.

**(e)** Ensure the front wheels are pointed straight ahead. Tie down the steering wheel, using the securing device attached under the dashboard.

**(f)** Secure all loose equipment on the SMART-T with tape or Type III nylon cord.

**(g)** Tape the windshield in an X formation from corner to corner. Tape all mirrors, lights and gauges. Remove and secure the rear cabin window.

**(h)** Secure the antenna dish.

**(2) Rigging.** Rig the load according to the steps in Figure 2-23.

**(3) Hookup.** The hookup team stands on the vehicle. The static wand person discharges the static electricity with the static wand. The hookup person places the apex fitting onto the aircraft cargo hook. The hookup team then carefully dismounts the vehicle and remains close to the load as the helicopter removes slack from the sling legs. When successful hookup is assured, the hookup team quickly exits the area underneath the helicopter to the designated rendezvous point.

**(4) Derigging.** Derigging is the reverse of the preparation and rigging procedures in steps d (1) and d (2).

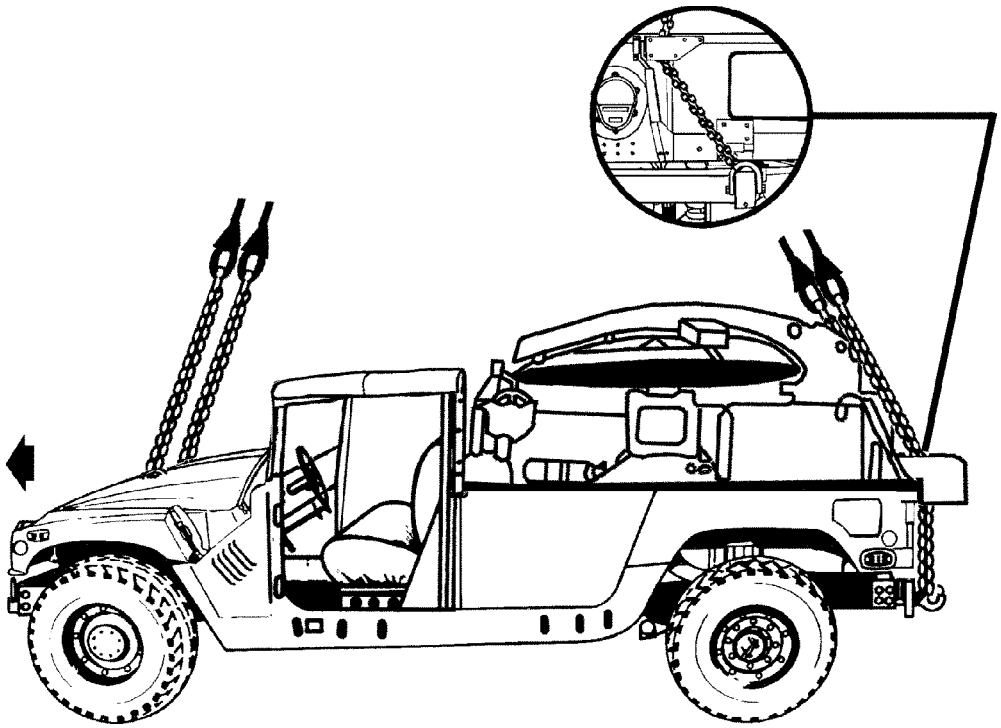

**RIGGING STEPS**

**1.** Position apex fitting on top of the vehicle. Route outer sling legs 1and 2 to the front of the vehicle and inner sling legs 3 and 4 to the rear. Sling legs 1 and 3 must be on the left side of the load.

**2.** Loop the chain end of sling leg 1 through the left front lift provision that protrudes through the hood from inboard to outboard. Place the correct link from Table 2-24 in the grab hook. Repeat with sling leg 2 and the right front lift provision. Secure excess chain with tape or Type III nylon cord.

**3.** Route the chain end of sling leg 3 through the sling guide located on the tailgate. Loop the chain end through the left lift provision on the bumper and thread back through the sling guide. Place the correct link from Table 2-24 in the grab hook. Repeat with sling leg 4 and the right rear lift provision. See insert above.

**4.** Cluster and tie or tape (breakaway technique) all sling legs together on top of the shelter to prevent entanglement during hookup and lift-off.

***Figure 2-23. M1097A2 (HMMWV) With Secure Mobile Anti-Jam Tactical Terminal (SMART-T) Pallet***

## 2-26. M1097A1 (HMMWV) With Remote Landing Site Tower (RLST)

**a. Applicability.** The following item in Table 2-25 is certified for all helicopters with suitable lift capacity by the US Army Soldier Systems Center:

**Table 2-25. M1097A1 (HMMWV) With Remote Landing Site Tower (RLST)**

| NOMENCLATURE | MAX WEIGHT (POUNDS) | SLING SET | LINK COUNT FRONT/REAR | RECOMMENDED AIRSPEED (KNOTS) |
|---|---|---|---|---|
| M1097A1 (HMMWV) With Remote Landing Site Tower (RLST) | 8,460 | 15K | 60/3 | 120 |

**b. Materials.** The following materials are required to rig this load:

**(1)** Sling set (15,000-pound capacity).

**(a)** Chain length, part number 34080-4, from 15,000-pound capacity sling sets (8 each).

**(b)** Coupling link, part number 31611, from 15,000-pound capacity sling sets (8 each).

**(2)** Tape, adhesive, pressure-sensitive, 2-inch wide roll.

**(3)** Cord, nylon, Type III, 550-pound breaking strength.

**(4)** Webbing, cotton, 1/4-inch, 80-pound breaking strength.

**(5)** Felt sheet, cattle hair, Type IV, 1/2-inch or suitable padding.

**c. Personnel.** Two persons can prepare and rig this load in 15 minutes.

**d. Procedures.** The following procedures apply to this load:

**(1) Preparation.** Prepare the load using the following steps:

**(a)** Fold mirrors forward in front of the windshield for added protection and tie together with Type III nylon cord.

**(b)** Secure all equipment and cargo inside the vehicle with tape, nylon cord, or lashings. Remove and secure the doors in the cab of the vehicle.

**(c)** Ensure the fuel tank is not over 3/4 full. Inspect fuel tank cap, oil filler cap, and battery caps for proper installation.

**(d)** Engage the vehicle parking brake and put the transmission in neutral.

**(e)** Ensure the front wheels are pointed straight ahead. Tie down the steering wheel, using the securing device attached under the dashboard.

**(f)** Install the lift provisions on the outer ends of the rear bumper by removing the tiedown provisions located inboard of the bumper end and installing them on the outer ends of the rear bumper.

**(g)** Configure the RLST in the TRANSPORT mode in accordance with the operator's manual.

**(h)** Ensure the RLST is properly secured to the vehicle. Secure all equipment inside the RLST with the hold-down straps, tape, or Type III nylon cord.

**(i)** Secure the RLST cover with the straps provided. Secure the loose ends with tape.

**(j)** Tape the windshield in an X formation from corner to corner.

**(k)** Extend the sling leg chains by connecting two additional chain lengths to each chain with coupling links.

**(2) Rigging.** Rig the load according to the steps in Figure 2-24.

**(3) Hookup.** The hookup team stands on the vehicle. The static wand person discharges the static electricity with the static wand. The hookup person places the apex fitting onto the aircraft cargo hook. The hookup team then carefully dismounts the vehicle and remains close to the load as the helicopter removes slack from the sling legs. When successful hookup is assured, the hookup team quickly exits the area underneath the helicopter to the designated rendezvous point.

**(4) Derigging.** Derigging is the reverse of the preparation and rigging procedures in steps d (1) and d (2).

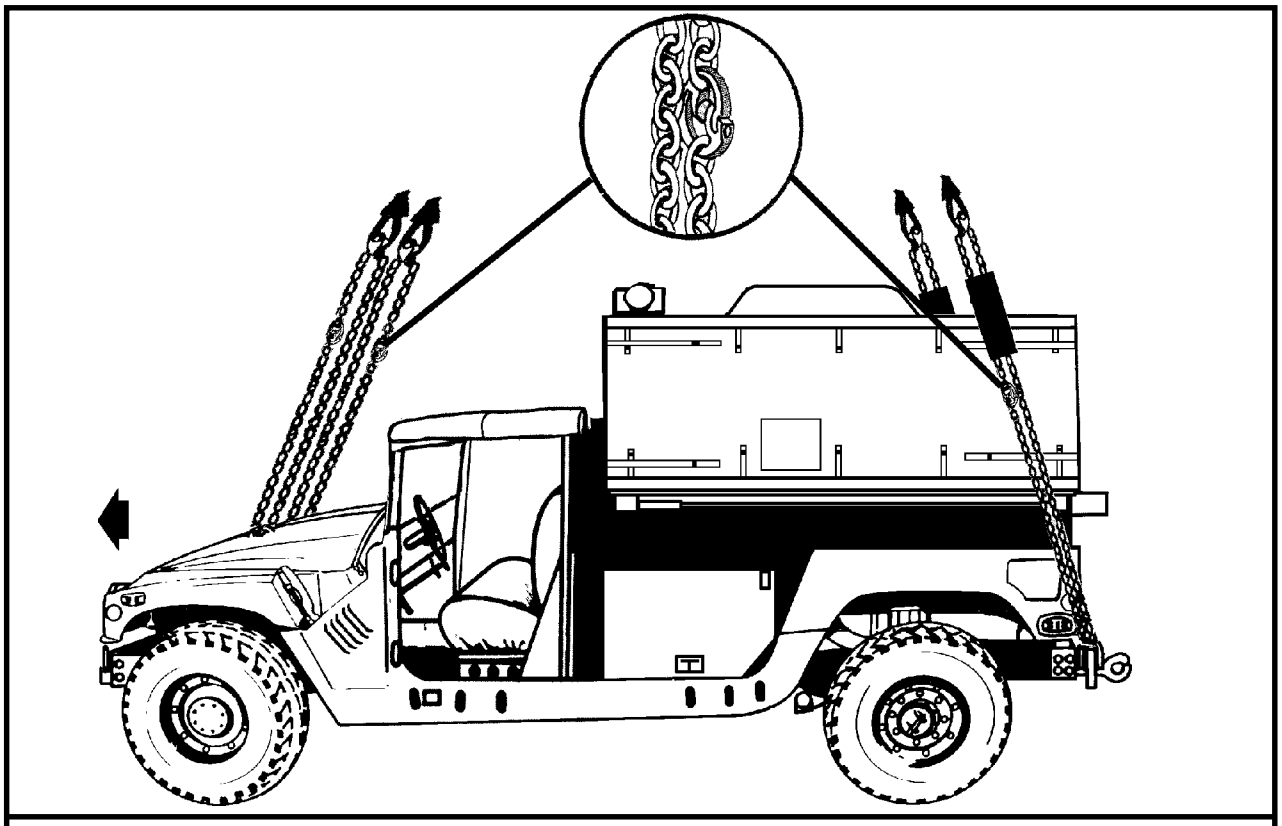

**RIGGING STEPS**

**1.** Position the web ring beside the RLST. Route outer sling legs 1and 2 to the front of the vehicle and inner sling legs 3 and 4 to the rear. Sling legs 1 and 3 must be on the left side of the load.

**2.** Loop the chain end of sling leg 1 through the left front lift provision that protrudes through the hood from inboard to outboard. Place the correct link from Table 2-25 in the grab hook. Repeat with sling leg 2 and the right front lift provision. Secure excess chain with tape or Type III nylon cord.

**3.** Route the chain end of sling leg 3 through the lift provision located on the left end of the rear bumper from inboard to outboard. Place the correct link from Table 2-25 in the grab hook. Repeat with sling leg 4 and the right rear lift provision.

**4.** Pad the sling legs in the area where they make contact with the RLST.

**5.** Cluster and tie or tape (breakaway technique) all sling legs together on top of the shelter to prevent entanglement during hookup and lift-off.

*Figure 2-24. M1097A1 (HMMWV) With Remote Landing Site Tower (RLST)*

## 2-27. M1113 (HMMWV) With M56 Smoke Generating System

**a. Applicability.** The following item in Table 2-26 is certified for all helicopters with suitable lift capacity by the US Army Soldier Systems Center:

**Table 2-26. M1113 (HMMWV) With M56 Smoke Generating System**

| NOMENCLATURE | MAX WEIGHT (POUNDS) | SLING SET | LINK COUNT FRONT/REAR | RECOMMENDED AIRSPEED (KNOTS) |
|---|---|---|---|---|
| M1113 (HMMWV) With M56 Smoke Generating System with Graphite in Tank | 9,400 | 10K | 50/3 | 120 |
| M1113 (HMMWV) With M56 Smoke Generating System without Graphite in Tank | 9,400 | 10K | 50-Front<br>14-Right Rear<br>3-Left Rear | 120 |

**b. Materials.** The following materials are required to rig this load:

**(1)** Sling set (10,000-pound capacity).

**(2)** Tape, adhesive, pressure-sensitive, 2-inch wide roll.

**(3)** Cord, nylon, Type III, 550-pound breaking strength.

**(4)** Webbing, cotton, 1/4-inch, 80-pound breaking strength.

**(5)** Felt sheet, cattle hair, Type IV, 1/2-inch or suitable padding.

**(6)** Spreader bar assembly(component of the M996/M997 HMMWV Ambulance).

**c. Personnel.** Two persons can prepare and rig this load in 10 minutes.

**d. Procedures.** The following procedures apply to this load:

**(1) Preparation.** Prepare the load using the following steps:

**(a)** Fold mirrors forward in front of the windshield for added protection and tie together with Type III nylon cord.

**(b)** Secure all equipment and cargo inside the vehicle with tape, nylon cord, or lashings. Remove and secure the doors in the cab of the vehicle.

**(c)** Ensure the fuel tank is not over 3/4 full. Inspect fuel tank cap, oil filler cap, and battery caps for proper installation.

**(d)** Engage the vehicle parking brake and put the transmission in neutral.

**(e)** Ensure the front wheels are pointed straight ahead. Tie down the steering wheel, using the securing device attached under the dashboard.

**(f)** Ensure the turbine fuel and both fog oil tanks are not over 3/4 full.

**(g)** Set the three-way valve to the OFF position.

**(h)** Ensure the IR hopper latches are securely closed and the auxiliary hoses are attached to the mounting bracket at the forward end of the inboard fog oil tank.

**(i)** Secure all latches and doors with tape or Type III nylon cord.

**(j)** Extend the spreader bar until the holes line up. Install the pin and engage the keeper.

**(k)** Position the spreader bar across the rear of the vehicle, resting on the power module and the weapons case. Attach the two spreader bar check cables to the larger hole openings, footman's loop, on the vehicle fenders.

**(2) Rigging.** Rig the load according to the steps in Figure 2-25.

**(3) Hookup.** The hookup team stands on the IR hopper loading platform on the left side of the vehicle. The static wand person discharges the static electricity with the static wand. The hookup person places the apex fitting onto the aircraft cargo hook. The hookup team then carefully dismounts the vehicle and remains close to the load as the helicopter removes slack from the sling legs. When successful hookup is assured, the hookup teamquickly exits the area underneath the helicopter to the designated rendezvous point.

**(4) Derigging.** Derigging is the reverse of the preparation and rigging procedures in steps d (1) and d (2).

**CAUTION**
**TOTAL WEIGHT OF LOAD IS RESTRICTED TO 9,400 POUNDS DUE TO THE STRUCTURAL STRENGTH OF THE SPREADER BAR.**

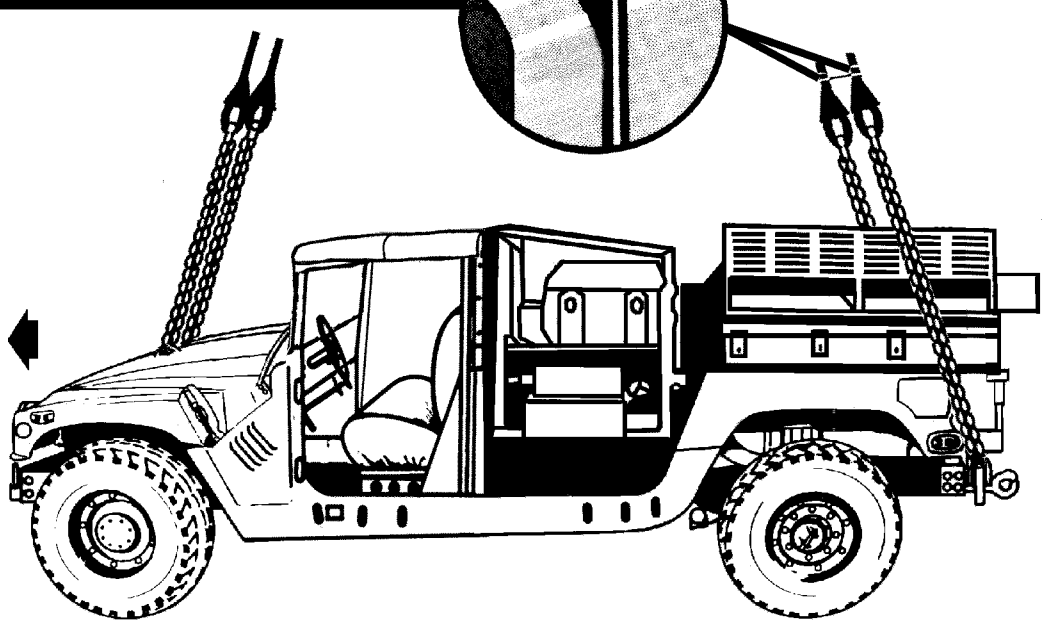

**RIGGING STEPS**

**1.** Position the apex fitting on top of the IR hopper or on the forward end of the fog oil tanks. Route outer sling legs 1and 2 to the front of the vehicle and inner sling legs 3 and 4 to the rear. Sling legs 1 and 3 must be on the left side of the load.

**2.** Loop the chain end of sling leg 1 through the left front lift provision that protrudes through the hood from inboard to outboard. Place the correct link from Table 2-26 in the grab hook. Repeat with sling leg 2 and the right front lift provision. Secure excess chain with tape or Type III nylon cord.

**3.** Place the nylon rope of sling legs 3 and 4 in the guides on the ends of the spreader bar. Route the chain end of sling leg 3 through the lift provision located on the left end of the rear bumper from inboard to outboard. Place the correct link from Table 2-26 in the grab hook. Repeat with sling leg 4 and the right rear lift provision.

**4.** Pad the sling legs in the area where they make contact with the structure.

**5.** Cluster and tie or tape (breakaway technique) all sling legs together on top of the shelter to prevent entanglement during hookup and lift-off.

*Figure 2-25. M1113 (HMMWV) With M56 Smoke Generating System*

## 2-28. M1097A2 (HMMWV) Soft Top Truck With Advanced Field Artillery Tactical Data Systems (AFATADS)

**a. Applicability.** The following items in Table 2-27 are certified for all helicopters with suitable lift capacity by the US Army Soldier Systems Center:

**Table 2-27. M1097A2 (HMMWV) Soft Top Truck With Advanced Field Artillery Tactical Data Systems (AFATADS)**

| NOMENCLATURE | MAX WEIGHT (POUNDS) | SLING SET | LINK COUNT FRONT/REAR | RECOMMENDED AIRSPEED (KNOTS) |
|---|---|---|---|---|
| **System 2**: CHS-2 AN/GYG-3(V)1, with SINCGARS AN/VRC-90, AN/VRC-92, and EPLRS installed in the bed. AN/VRC-92 installed in cab. | 8,103 | 10K | 50/3 | 100 |
| **System 3**: CHS-2 AN/GYG-3(V)3, with SINCGARS AN/VRC-90, AN/VRC-92, and EPLRS installed in the bed. AN/VRC-92 installed in cab. | 8,366 | 10K | 50/3 | 100 |
| **System 4**: 2 each AN/GYK-37(V)2, with SINCGARS AN/VRC-89, AN/VRC-92, and EPLRS | 7,790 | 10K | 50/3 | 100 |

**b. Materials.** The following materials are required to rig this load:

**(1)** Sling set (10,000-pound capacity).

**(a)** Chain length, part number 38850-00053-101, from a 10,000-pound capacity sling set (4 each).

**(b)** Coupling link, part number 577-0615, from a 10,000-pound capacity sling set (4 each).

**(2)** Tape, adhesive, pressure-sensitive, 2-inch wide roll.

**(3)** Cord, nylon, Type III, 550-pound breaking strength.

**(4)** Webbing, cotton, 1/4-inch, 80-pound breaking strength.

**(5)** Padding, cellulose.

**c. Personnel.** Two persons can prepare and rig this load in 10 minutes.

**d. Procedures.** The following procedures apply to this load:

**(1) Preparation.** Prepare the load using the following steps:

**(a)** Fold mirrors forward in front of the windshield for added protection and tie together with Type III nylon cord.

**(b)** Secure all equipment and cargo inside the vehicle with tape, nylon cord, or lashings. Remove and secure the doors in the cab of the vehicle.

**(c)** Ensure the fuel tank is not over 3/4 full. Inspect fuel tank cap, oil filler cap, and battery caps for proper installation.

**(d)** Engage the vehicle parking brake and put the transmission in neutral.

**(e)** Ensure the front wheels are pointed straight ahead. Tie down the steering wheel, using the securing device attached under the dashboard.

**(f)** Extend the sling leg chains by connecting one

additional chain length to each chain using the coupling links.

**(2) Rigging.** Rig the load according to the steps in Figure 2-26.

**(3) Hookup.** The hookup team stands on the shelter. The static wand person discharges the static electricity with the static wand. The hookup person places the apex fitting onto the aircraft cargo hook. The hookup team then carefully dismounts the vehicle and remains close to the load as the helicopter removes slack from the sling legs. When successful hookup is assured, the hookup team quickly exits the area underneath the helicopter to the designated rendezvous point.

**(4) Derigging.** Derigging is the reverse of the preparation and rigging procedures in steps d (1) and d (2).

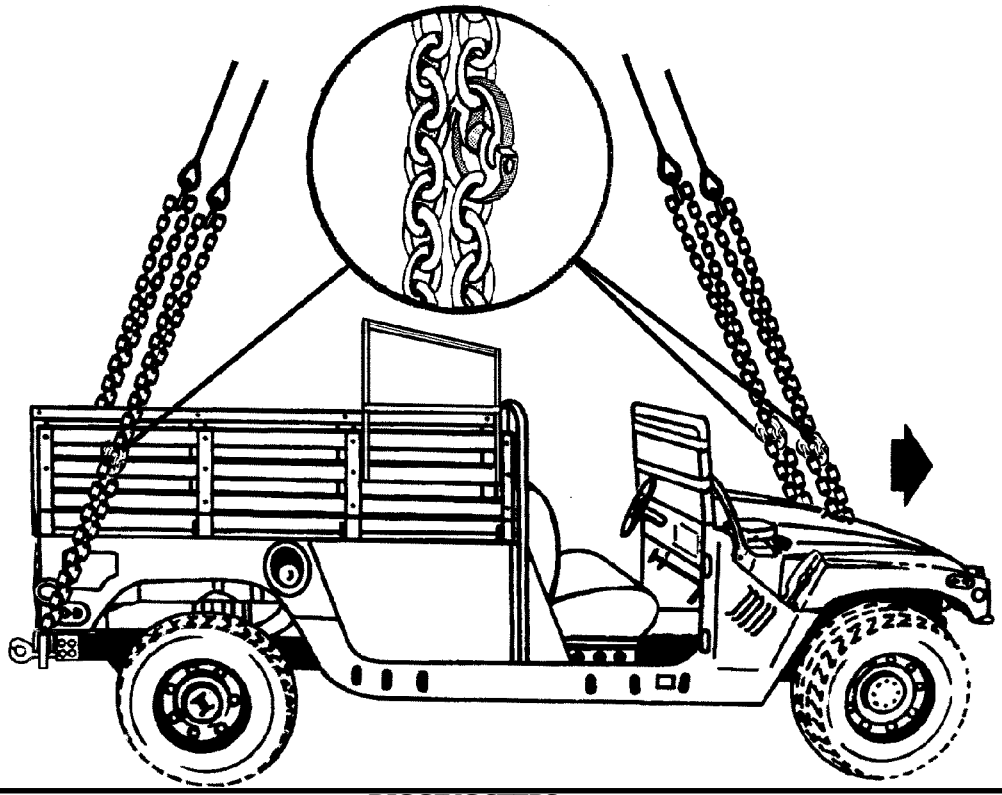

**RIGGING STEPS**

**1.** Position the apex fitting on top of the shelter. Route outer sling legs 1and 2 to the front of the vehicle and inner sling legs 3 and 4 to the rear. Sling legs 1 and 3 must be on the left side of the load.

**2.** Loop the chain end of sling leg 1 through the left front lift provision that protrudes through the hood from inboard to outboard. Place the correct link from Table 2-27 in the grab hook. Repeat with sling leg 2 and the right front lift provision. Secure excess chain with tape or Type III nylon cord.

**3.** Route the chain end of sling leg 3 through the lift provision located on the left end of the rear bumper from inboard to outboard. Place the correct link from Table 2-27 in the grab hook. Repeat with sling leg 4 and the right rear lift provision.

**5.** Cluster and tie or tape (breakaway technique) all sling legs together on top of the shelter to prevent entanglement during hookup and lift-off.

*Figure 2-26. M1097A2 Soft Top Truck With Advanced Field Artillery Tactical Data Systems (AFATADS)*

## 2-29. M1113 Truck, Utility, Expanded Capacity (HMMWV) With Lightweight Multipurpose Shelter (LMS)

**a. Applicability.** The following items in Table 2-28 are certified for all helicopters with suitable lift capacity by the US Army Soldier Systems Center:

**Table 2-28. M1113 HMMWV with Lightweight Multipurpose Shelter (LMS)**

| NOMENCLATURE | MAX WEIGHT (POUNDS) | SLING SET | LINK COUNT FRONT / REAR | RECOMMENDED AIRSPEED (KNOTS) |
|---|---|---|---|---|
| AN/TTC-56 Single Shelter Switch (SSS) | 11,500 | 25K | 32/5 | 120 |
| Digital Topographic Support System-Light (DTSS-L) | 11,500 | 25K | 32/5 | 100 |

**b. Materials.** The following materials are required to rig this load:

**(1)** Sling set (25,000-pound capacity).

**(a)** Chain length, part number 38850-00053-102, from a 25,000-pound capacity sling set (4 each).

**(b)** Coupling link, part number 664241, from a 25,000-pound sling set (4 each).

**(2)** Tape, adhesive, pressure-sensitive, 2-inch wide roll.

**(3)** Cord, nylon, Type III, 550-pound breaking strength.

**(4)** Webbing, cotton, 1/4-inch, 80-pound breaking strength.

**(5)** Felt sheet, cattle hair, Type IV, 1/2-inch or suitable padding.

**c. Personnel.** Two persons can prepare and rig this load in 15 minutes.

**d. Procedures.** The following procedures apply to this load:

**(1) Preparation.** Prepare the load using the following steps:

**(a)** Extend the sling leg chains by connecting one additional chain length to each chain on a 25,000-pound capacity sling set with coupling links.

**(b)** Fold mirrors forward in front of the windshield for added protection and tie together with Type III nylon cord.

**(c)** Secure all equipment inside the shelter with tape, nylon cord, or lashings; close and secure shelter vents and door with nylon cord or tape.

**(d)** Secure environmental control unit cover with duct tape.

**(e)** Disconnect the power cord from the rear panel and secure it to the rear platform with Type III nylon cord. Lower the power panel door and secure the door.

**(f)** Secure all equipment and cargo inside the vehicle with tape, nylon cord, or lashings. Secure the doors shut if installed.

**(g)** Ensure the fuel tank is not over 3/4 full. Inspect fuel tank cap, oil filler cap, and battery caps for proper installation.

**(h)** Engage the vehicle parking brake and put the transmission in neutral.

**(i)** Ensure the front wheels are pointed straight ahead. Tie down the steering wheel, using the securing device attached under the dashboard.

**(j)** Tape the windshield in an X formation from corner to corner.

**(k)** Install the lift provisions on the outer ends of the rear bumper.

**(l)** Remove the upper antenna mounting bracket if installed.

**(2) Rigging.** Rig the load according to the steps in Figure 2-27.

**(3) Hookup.** The hookup team stands on top of the shelter. The static wand person discharges the static electricity with the static wand. The hookup person places the apex fitting onto the cargo hook. The hookup team then carefully dismounts the vehicle and remains close to the load as the helicopter removes slack from the sling legs. When successful hookup is assured, the hookup team quickly exits the area underneath the helicopter to the designated rendezvous point.

**(4) Derigging.** Derigging is the reverse of the preparation and rigging procedures in steps d (1) and d (2).

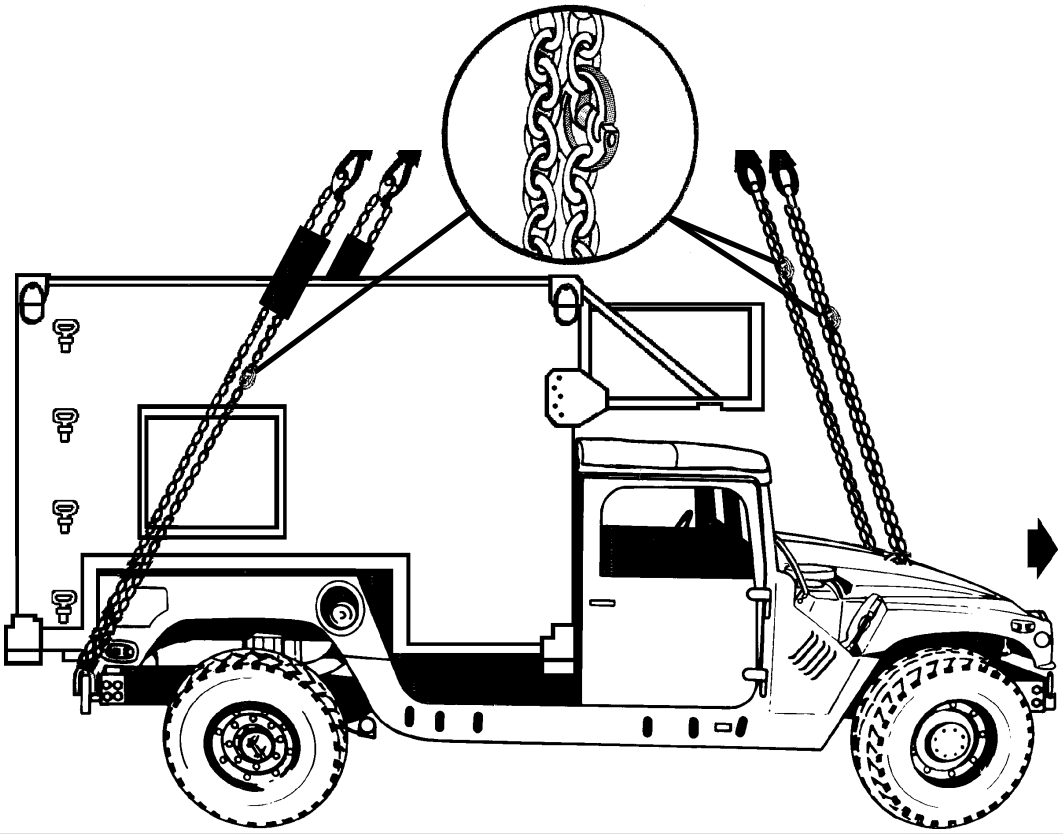

**RIGGING STEPS**

**1.** Position the apex fitting on top of the shelter. Route outer sling legs 1 and 2 to the front of the vehicle and inner sling legs 3 and 4 to the rear. Sling legs 1 and 3 must be on the left side of the load.

**2.** Loop the chain end of sling leg 1 through the left front lift provision that protrudes through the hood from inboard to outboard. Place the correct link from Table 2-28 in the grab hook. Repeat with sling leg 2 through the right front lift provision. Secure all excess chain with tape or Type III nylon cord.

**3.** Loop the chain end of sling leg 3 through the left rear lift provision located on the left end of the rear bumper. Place the correct link from Table 2-28 in the grab hook. Repeat with sling leg 4 through the right rear lift provision Secure all excess chain with tape or Type III nylon cord.

**4.** Wrap the rear slings with padding where they contact the shelter sides.

**5.** Cluster and tie or tape (breakaway technique) the sling legs in each sling set together to prevent entanglement during hookup and lift-off.

*Figure 2-27. LMS Shelter Mounted on the M1113*

**CAUTION**

**Do not use the lift shackles located near the center of the rear bumper for sling load lift provisions.**

## 2-30. M1097A2 Shelter Carrier (HMMWV) With Special Operations Media System (SOMS-B) in S-788G Shelter (LMS)

**a. Applicability.** The following item in Table 2-29 is certified for all helicopters with suitable lift capacity by the US Army Soldier Systems Center:

**Table 2-29. M1097A2 Shelter Carrier (HMMWV) With Special Operations Media System (SOMS-B) in S-788G Shelter (LMS)**

| NOMENCLATURE | MAX WEIGHT (POUNDS) | SLING SET | LINK COUNT FRONT / REAR | RECOMMENDED AIRSPEED (KNOTS) |
|---|---|---|---|---|
| Special Operations Media System | 9,080 | 10K | 40/3 | 120 |

**b. Materials.** The following materials are required to rig this load:

**(1)** Sling set (10,000-pound capacity).

**(a)** Chain length, part number 38850-00053-101, from a 10,000-pound capacity sling set (4 each).

**(b)** Coupling link, part number 577-0615, from a 10,000-pound sling set (4 each).

**(2)** Tape, adhesive, pressure-sensitive, 2-inch wide roll.

**(3)** Cord, nylon, Type III, 550-pound breaking strength.

**(4)** Webbing, cotton, 1/4-inch, 80-pound breaking strength.

**(5)** Felt sheet, cattle hair, Type IV, 1/2-inch or suitable padding.

**(6)** Padding, Cellulose.

**c. Personnel.** Two persons can prepare and rig this load in 15 minutes.

**d. Procedures.** The following procedures apply to this load:

**(1) Preparation.** Prepare the load using the following steps:

**(a)** Extend the sling leg chains by connecting one additional chain length to each chain on a 10,000-pound capacity sling set with coupling links.

**(b)** Fold mirrors forward in front of the windshield for added protection and tie together with Type III nylon cord.

**(c)** Secure all equipment inside the shelter with tape, nylon cord, or lashings; close and secure shelter vents and door with nylon cord or tape.

**(d)** Disconnect the power cord from the rear panel and secure it to the rear platform with Type III nylon cord. Lower the power panel door and secure the door.

**(e)** Secure all equipment and cargo inside the vehicle with tape, nylon cord, or lashings. Secure the doors shut if installed.

**(f)** Ensure the fuel tank is not over 3/4 full. Inspect fuel tank cap, oil filler cap, and battery caps for proper installation.

**(g)** Engage the vehicle parking brake and put the transmission in neutral.

**(h)** Ensure the front wheels are pointed straight ahead. Tie down the steering wheel, using the securing device attached under the dashboard.

**(i)** Tape the windshield in an X formation from corner to corner.

**(j)** Install the lift provisions on the outer ends of the rear bumper.

**(k)** Remove the upper antenna bracket if installed.

**(2) Rigging.** Rig the load according to the steps in Figure 2-28.

**NOTE: Ensure the chains on sling leg 1 are routed between the shelter and the 30 meter mast.**

**(3) Hookup.** The hookup team stands on top of the shelter. The static wand person discharges the static electricity with the static wand. The hookup person places the apex fitting onto the cargo hook. The hookup team then carefully dismounts the vehicle and remains close to the load as the helicopter removes slack from the sling legs. When successful hookup is assured, the hookup team quickly exits the area underneath the helicopter to the designated rendezvous point.

**NOTE: Hookup of this load presents substantial risk of damage to the load or injury to the hookup personnel. Use of a reach pendant is recommended for this load.**

**(4) Derigging.** Derigging is the reverse of the preparation and rigging procedures in steps d (1) and d (2).

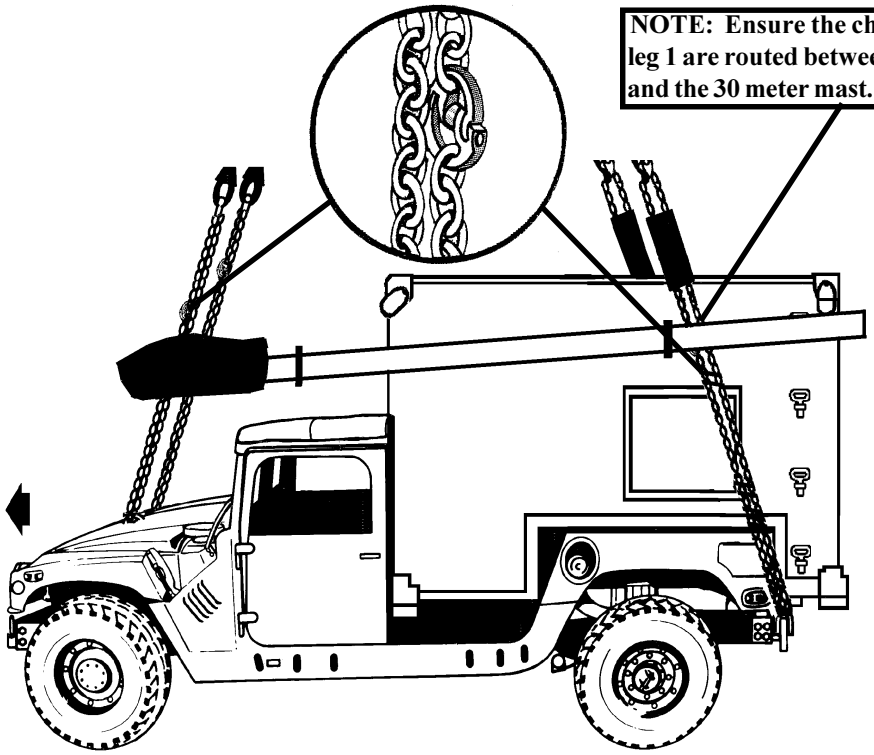


**RIGGING STEPS**

**1.** Position the apex fitting on top of the shelter. Route outer sling legs 1 and 2 to the front of the vehicle and inner sling legs 3 and 4 to the rear. Sling legs 1 and 3 must be on the left side of the load.

**2.** Loop the chain end of sling leg 1 through the left front lift provision that protrudes through the hood from inboard to outboard. Place the correct link from Table 2-29 in the grab hook. Repeat with sling leg 2 through the right front lift provision. Secure all excess chain with tape or Type III nylon cord.

**3.** Loop the chain end of sling leg 3 through the left rear lift provision located on the left end of the rear bumper. Place the correct link from Table 2-29 in the grab hook. Repeat with sling leg 4 through the right rear lift provision Secure all excess chain with tape or Type III nylon cord.

**4.** Wrap the rear slings with padding where they contact the shelter sides.

**5.** Cluster and tie or tape (breakaway technique) the sling legs in each sling set together to prevent entanglement during hookup and lift-off.

*Figure 2-28. SOMS-B in LMS Shelter Mounted on the M1097A2*

**CAUTION**

**Do not use the lift shackles located near the center of the rear bumper for sling load lift provisions.**

## 2-31. M1037 (HMMWV) With Compressed Air-Foam System, Mobile (CAFSM)

**a. Applicability.** The following item in Table 2-30 is certified for all helicopters with suitable lift capacity by the US Army Soldier Systems Center:

**Table 2-30. M1037 (HMMWV) With Compressed Air-Foam System, Mobile (CAFSM)**

| NOMENCLATURE | MAX WEIGHT (POUNDS) | SLING SET | LINK COUNT FRONT / REAR | RECOMMENDED AIRSPEED (KNOTS) |
|---|---|---|---|---|
| Compressed Air-Foam System, Mobile | 6,400 (EMPTY) | 15K | 40/3 | 120 |

**Note: The water tank in the CAFSM MUST BE EMPTY for sling loading.**

**b. Materials.** The following materials are required to rig this load:

**(1)** Sling set (15,000-pound capacity) .

**(2)** Tape, adhesive, pressure-sensitive, 2-inch wide roll.

**(3)** Cord, nylon, Type III, 550-pound breaking strength.

**(4)** Webbing, cotton, 1/4-inch, 80-pound breaking strength.

**c. Personnel.** Two persons can prepare and rig this load in 15 minutes.

**d. Procedures.** The following procedures apply to this load:

**(1) Preparation.** Prepare the load using the following steps:

**(a)** Fold mirrors forward in front of the windshield for added protection and tie together with Type III nylon cord. Remove the canvas cab top and the doors. Secure to the seats with Type III nylon cord.

**(b)** Ensure the CAFSM is secured to the truck. Secure all lids, doors, and vents on the CAFSM with tape or Type III nylon cord. Safety tie all chains and hoses with tape or Type III nylon cord.

**(c)** Secure all equipment and cargo inside the vehicle with tape, nylon cord, or lashings.

**(d)** Ensure the fuel tank is not over 3/4 full. Inspect fuel tank cap, oil filler cap, and battery caps for proper installation.

**(e)** Engage the vehicle parking brake and put the transmission in neutral.

**(f)** Ensure the front wheels are pointed straight ahead. Tie down the steering wheel, using the securing device attached under the dashboard.

**(g)** Tape the windshield in an X formation from corner to corner.

**(2) Rigging.** Rig the load according to the steps in Figure 2-29.

**(3) Hookup.** The hookup team stands in the bed of the vehicle. The static wand person discharges the static electricity with the static wand. The hookup person places the apex fitting on the cargo hook. The hookup team then carefully dismounts the vehicle and remains close to the load as the helicopter removes slack from the sling legs. When successful hookup is assured, the hookup team quickly exits the area underneath the helicopter to the designated rendezvous point.

**(4) Derigging.** Derigging is the reverse of the preparation and rigging procedures in steps d (1) and d (2).

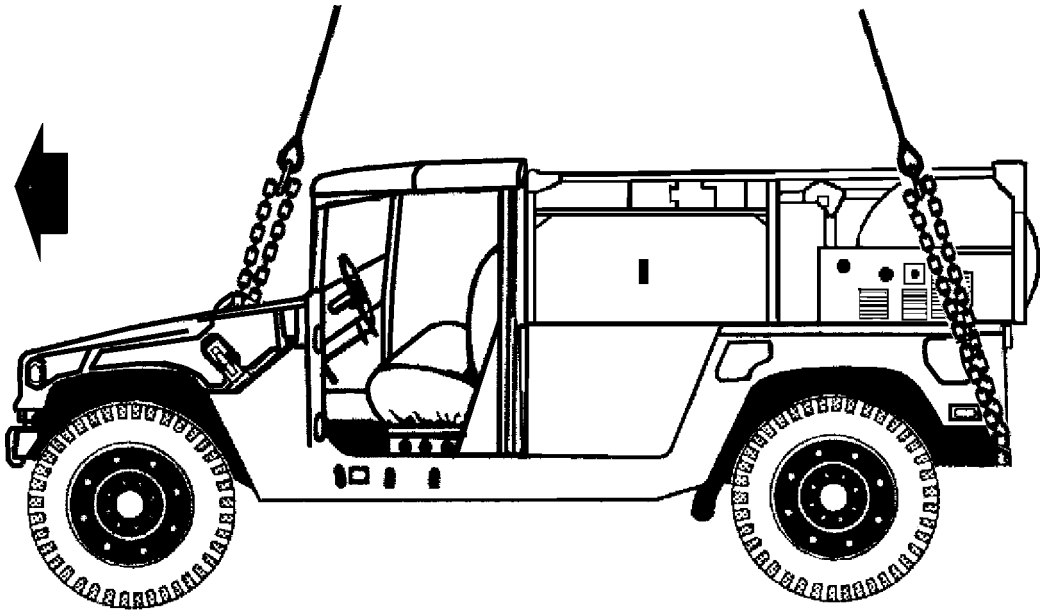

**RIGGING STEPS**

**1.** Position the apex fitting on top of the vehicle. Route outer sling legs 1 and 2 to the front of the vehicle and inner sling legs 3 and 4 to the rear. Sling legs 1 and 3 must be on the left side of the load.

**2.** Loop the chain end of sling leg 1 through the left front lift provision that protrudes through the hood from inboard to outboard. Place the correct link from Table 2-30 in the grab hook. Repeat with sling leg 2 through the right front lift provision.

**3.** Loop the chain end of sling leg 3 through the left rear lift provision located on the outside end of the rear bumper. Place the correct link from Table 2-30 in the grab hook. Repeat with sling leg 4 through the right rear lift provision.

**4.** Secure all excess chain with tape or Type III nylon cord.

**5.** Cluster and tie or tape (breakaway technique) the sling legs in each sling set together to prevent entanglement during hookup and lift-off.

*Figure 2-29. M1037 (HMMWV) With Compressed Air-Foam System, Mobile (CAFSM)*

**CAUTION**

**Do not use the lift shackles located near the center of the rear bumper for sling load lift provisions.**

## 2-32. Prophet AN/MLQ-40 (V) on M1097 HMMWV

**a. Applicability.** The following item in Table 2-31 is certified for all helicopters with suitable lift capacity by the US Army Soldier Systems Center:

**Table 2-31. Prophet AN/MLQ-40 (V) on M1097 HMMWV**

| NOMENCLATURE | MAX WEIGHT (POUNDS) | SLING SET | LINK COUNT FRONT / REAR | RECOMMENDED AIRSPEED (KNOTS) |
|---|---|---|---|---|
| Prophet AN/MLQ-40 (V) | 10,000 | 10K | 55/10 | 90 |

**b. Materials.** The following materials are required to rig this load:

**(1)** Sling set (10,000-pound capacity).

**(a)** Chain length, part number 38850-00053-101, from a 10,000-pound capacity sling set (4 each).

**(b)** Coupling link, part number 577-0615, from a 10,000-pound sling set (4 each).

**(2)** Tape, adhesive, pressure-sensitive, 2-inch wide roll.

**(3)** Cord, nylon, Type III, 550-pound breaking strength.

**(4)** Webbing, cotton, 1/4-inch, 80-pound breaking strength.

**c. Personnel.** Two persons can prepare and rig this load in 15 minutes.

**d. Procedures.** The following procedures apply to this load:

**(1) Preparation.** Prepare the load using the following steps:

**(a)** Fold mirrors forward inward and tie together with Type III nylon cord.

**(b)** Ensure the Prophet cargo bed cover is secured to the truck. Secure all equipment and cargo inside the unit with tape, nylon cord, or lashings. Close and secure the door.

**(c)** Secure all equipment and cargo inside the vehicle with tape, nylon cord, or lashings. Roll up all the windows and secure the doors closed (if installed)

**(d)** Ensure the fuel tank is not over 3/4 full. Inspect fuel tank cap, oil filler cap, and battery caps for proper installation.

**(e)** Engage the vehicle parking brake and put the transmission in neutral.

**(f)** Ensure the front wheels are pointed straight ahead. Tie down the steering wheel, using the securing device attached under the dashboard.

**(g)** Tape the windshield in an X formation from corner to corner.

**(h)** Extend the sling leg chains by connecting one additional chain length to each chain on a 10,000-pound capacity sling set with coupling links.

**(2) Rigging.** Rig the load according to the steps in Figure 2-30.

**(3) Hookup.** The hookup team stands on top of the vehicle. The static wand person discharges the static electricity with the static wand. The hookup person places the apex fitting on the cargo hook. The hookup team then carefully dismounts the vehicle and remains close to the load as the helicopter removes slack from the sling legs. When successful hookup is assured, the hookup team quickly exits the area underneath the helicopter to the designated rendezvous point.

**(4) Derigging.** Derigging is the reverse of the preparation and rigging procedures in steps d (1) and d (2).

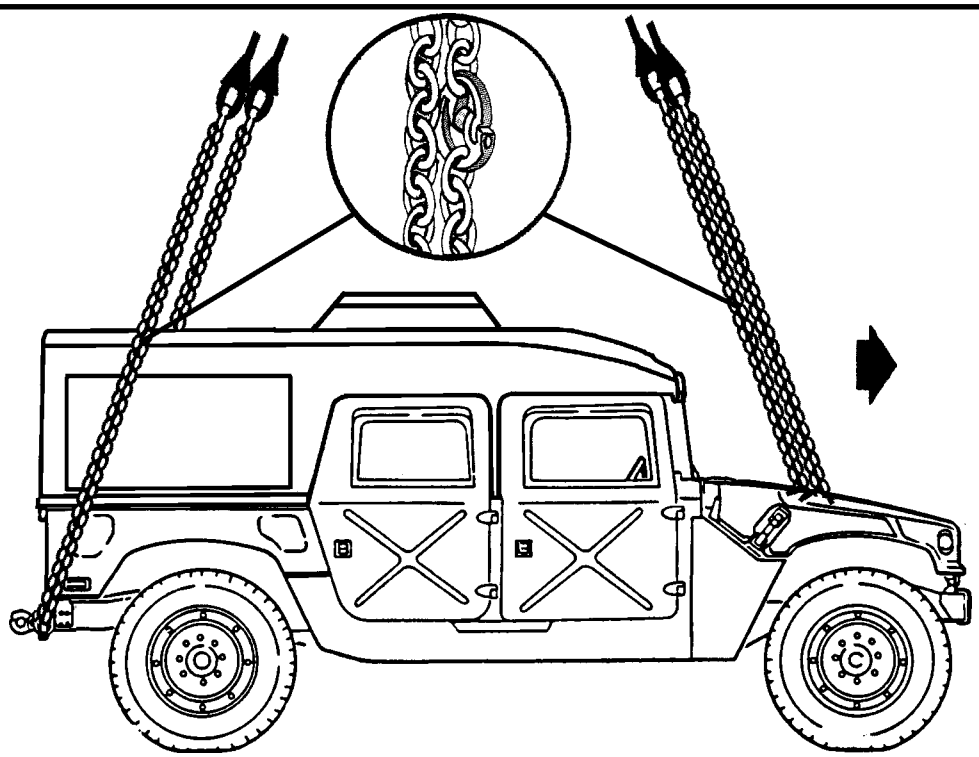

**RIGGING STEPS**

**1.** Position the apex fitting on top of the vehicle roof. Route outer sling legs 1 and 2 to the front of the vehicle and inner sling legs 3 and 4 to the rear. Sling legs 1 and 3 must be on the left side of the load.

**2.** Loop the chain end of sling leg 1 through the left front lift provision that protrudes through the hood from inboard to outboard. Place the correct link from Table 2-31 in the grab hook. Repeat with sling leg 2 through the right front lift provision.

**3.** Loop the chain end of sling leg 3 through the left rear lift provision located on the outside end of the rear bumper. Place the correct link from Table 2-31 in the grab hook. Repeat with sling leg 4 through the right rear lift provision.

**4.** Secure all excess chain with tape or Type III nylon cord.

**5.** Cluster and tie or tape (breakaway technique) the sling legs in each sling set together to prevent entanglement during hookup and lift-off.

*Figure 2-30. Prophet AN/MLQ-40 (V) on M1097 HMMWV*

**CAUTION**

**Do not use the lift shackles located near the center of the rear bumper for sling load lift provisions.**

## 2-33. Helmet Hardtop (Amtech Corp) Cargo Bed Cover on M1097A2 HMMWV

**a. Applicability.** The following item in Table 2-32 is certified for all helicopters with suitable lift capacity by the US Army Soldier Systems Center:

**Table 2-32. Helmit Hardtop (Amtech Corp) Cargo Bed Cover on M1097A2 HMMWV**

| NOMENCLATURE | MAX WEIGHT (POUNDS) | SLING SET | LINK COUNT FRONT / REAR | RECOMMENDED AIRSPEED (KNOTS) |
|---|---|---|---|---|
| Measurements and Signature Intelligence (MASINT) | 10,300 | 25K | 45/10 | 90 |

**b. Materials.** The following materials are required to rig this load:

**(1)** Sling set (25,000-pound capacity).

**(a)** Chain length, part number 38850-00053-102, from a 25,000-pound capacity sling set (4 each).

**(b)** Coupling link, part number 664241, from a 25,000-pound sling set (4 each).

**(2)** Tape, adhesive, pressure-sensitive, 2-inch wide roll.

**(3)** Cord, nylon, Type III, 550-pound breaking strength.

**(4)** Webbing, cotton, 1/4-inch, 80-pound breaking strength.

**c. Personnel.** Two persons can prepare and rig this load in 15 minutes.

**d. Procedures.** The following procedures apply to this load:

**(1) Preparation.** Prepare the load using the following steps:

**(a)** Fold mirrors forward inward and tie together with Type III nylon cord.

**(b)** Ensure the cargo bed cover is secured to the truck. Secure all equipment and cargo inside the unit with tape, nylon cord, or lashings. Close and secure the door.

**(c)** Secure all equipment and cargo inside the vehicle with tape, nylon cord, or lashings. Roll up all the windows and secure the doors closed (if installed)

**(d)** Ensure the fuel tank is not over 3/4 full. Inspect fuel tank cap, oil filler cap, and battery caps for proper installation.

**(e)** Engage the vehicle parking brake and put the transmission in neutral.

**(f)** Ensure the front wheels are pointed straight ahead. Tie down the steering wheel, using the securing device attached under the dashboard.

**(g)** Tape the windshield in an X formation from corner to corner.

**(h)** Extend the sling leg chains by connecting one additional chain length to each chain on a 10,000-pound capacity sling set with coupling links.

**(2) Rigging.** Rig the load according to the steps in Figure 2-31.

**(3) Hookup.** The hookup team stands on top of the vehicle. The static wand person discharges the static electricity with the static wand. The hookup person places the apex fitting on the cargo hook. The hookup team then carefully dismounts the vehicle and remains close to the load as the helicopter removes slack from the sling legs. When successful hookup is assured, the hookup team quickly exits the area underneath the helicopter to the designated rendezvous point.

**(4) Derigging.** Derigging is the reverse of the preparation and rigging procedures in steps d (1) and d (2).

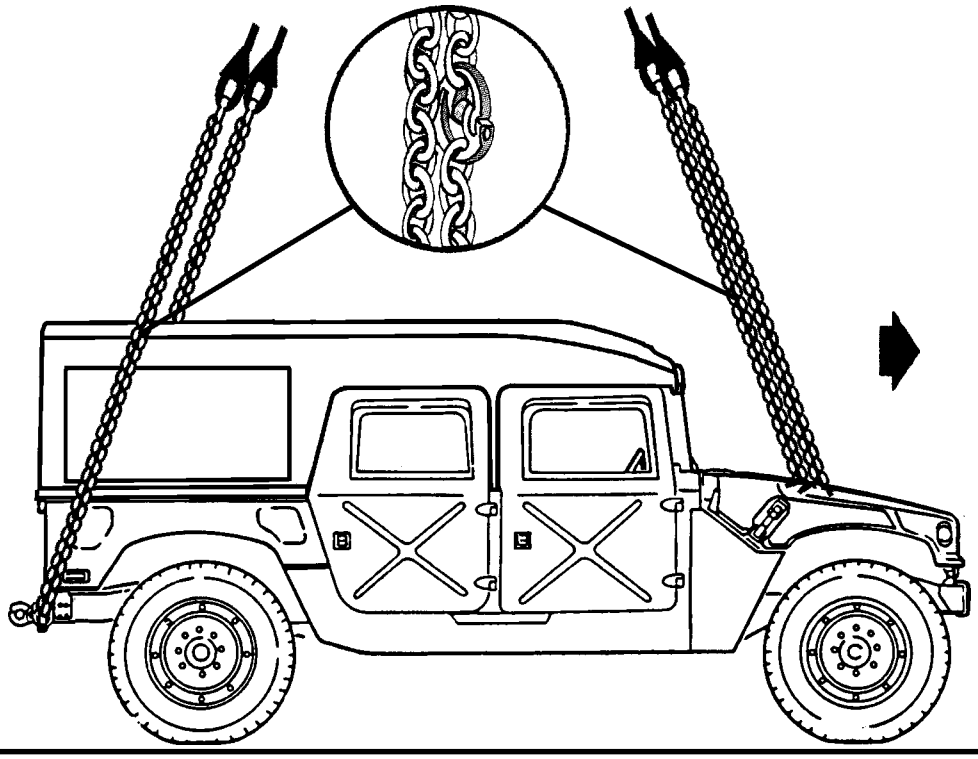

**RIGGING STEPS**

**1.** Position the apex fitting on top of the vehicle roof. Route outer sling legs 1 and 2 to the front of the vehicle and inner sling legs 3 and 4 to the rear. Sling legs 1 and 3 must be on the left side of the load.

**2.** Loop the chain end of sling leg 1 through the left front lift provision that protrudes through the hood from inboard to outboard. Place the correct link from Table 2-32 in the grab hook. Repeat with sling leg 2 through the right front lift provision.

**3.** Loop the chain end of sling leg 3 through the left rear lift provision located on the outside end of the rear bumper. Place the correct link from Table 2-32 in the grab hook. Repeat with sling leg 4 through the right rear lift provision.

**4.** Secure all excess chain with tape or Type III nylon cord.

**5.** Cluster and tie or tape (breakaway technique) the sling legs in each sling set together to prevent entanglement during hookup and lift-off.

*Figure 2-31. Helmit Hardtop (Amtech Corp) Cargo Bed Cover on M1097A2 HMMWV*

**CAUTION**

**Do not use the lift shackles located near the center of the rear bumper for sling load lift provisions.**

## 2-34. Interim Fast Attack Vehicle (IFAV) Truck, Long Wheel Base

**a. Applicability.** The following item in Table 2-33 is certified for all helicopters with suitable lift capacity by the US Army Soldier Systems Center:

**Table 2-33. Interim Fast Attack Vehicle (IFAV) Truck, Long Wheel Base**

| NOMENCLATURE | MAX WEIGHT (POUNDS) | SLING SET | LINK COUNT FRONT / REAR | RECOMMENDED AIRSPEED (KNOTS) |
|---|---|---|---|---|
| Interim Fast Attack Vehicle Truck, Long Wheel Base | 5,720 | 15K | 3/15 | 120 |

**b. Materials.** The following materials are required to rig this load:

**(1)** Sling set (15,000-pound capacity).

**(2)** Tape, adhesive, pressure-sensitive, 2-inch wide roll.

**(3)** Cord, nylon, Type III, 550-pound breaking strength.

**(4)** Webbing, cotton, 1/4-inch, 80-pound breaking strength.

**(5)** Padding, cellulose.

**(6)** Strap, cargo, tiedown (as required).

**c. Personnel.** Two persons can prepare and rig this load in 10 minutes.

**d. Procedures.** The following procedures apply to this load:

**(1) Preparation.** Prepare the load using the following steps:

**(a)** Fold mirrors forward in front of the windshield for added protection and tie together with Type III nylon cord. Remove all canvas covers.

**(b)** Secure all equipment and cargo inside the vehicle with tape, nylon cord, or tiedown straps.

**(c)** Ensure the fuel tank is not over 3/4 full. Inspect fuel tank cap, oil filler cap, and battery caps for proper installation.

**(d)** Engage the vehicle parking brake and put the transmission in neutral.

**(e)** Ensure the front wheels are pointed straight ahead. Tie down the steering wheel using Type III nylon cord.

**(f)** Tape the windshield in an X formation from corner to corner.

**(2) Rigging.** Rig the load according to the steps in Figure 2-32.

**(3) Hookup.** The hookup teams stand in the bed of the vehicle. The static wand person discharges the static electricity with the static wand. The hookup person places the web ring on the cargo hook. The hookup team then carefully dismounts the vehicle and remains close to the load as the helicopter removes slack from the sling legs. When successful hookup is assured, the hookup team quickly exits the area underneath the helicopter to the designated rendezvous point.

**(4) Derigging.** Derigging is the reverse of the preparation and rigging procedures in steps d (1) and d (2).

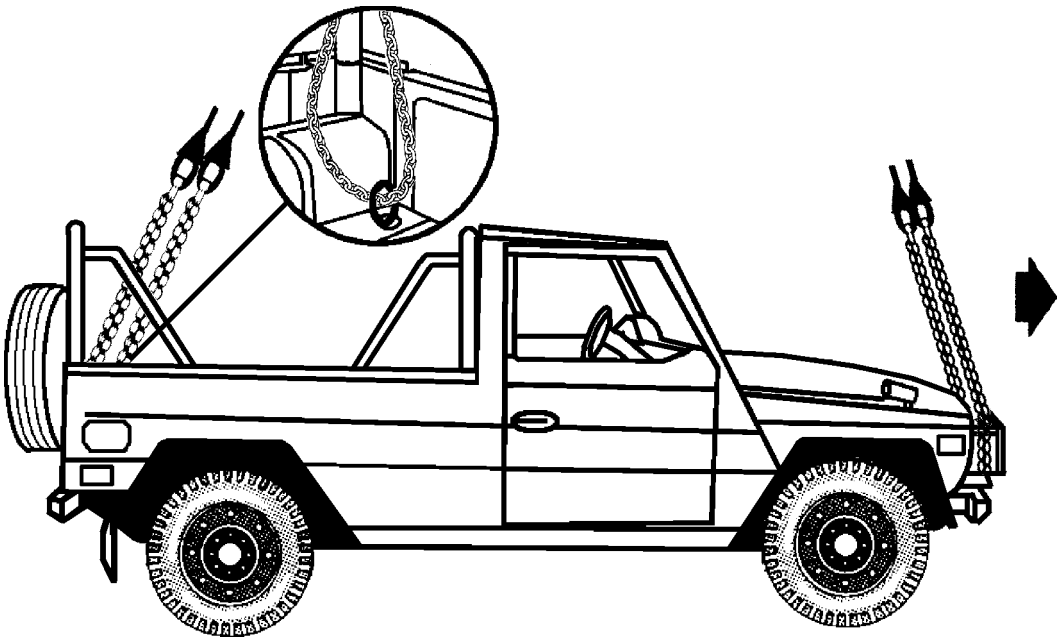

**RIGGING STEPS**

**1.** Position the apex fitting on top of the vehicle. Route outer sling legs 1 and 2 to the front of the vehicle and inner sling legs 3 and 4 to the rear. Sling legs 1 and 3 must be on the left side of the load.

**2.** Loop the chain end of sling leg 1 through the left front lift provision located on the left front corner of the bumper . Place the correct link from Table 2-33 in the grab hook. Repeat with sling leg 2 through the right front lift provision.

**3.** Loop the chain end of sling leg 3 through the left rear lift provision located in the left rear corner of the cargo bed. Place the correct link from Table 2-33 in the grab hook. Repeat with sling leg 4 through the right rear lift provision.

**4.** Secure all excess chain with tape or Type III nylon cord.

**5.** Cluster and tie or tape (breakaway technique) the sling legs in each sling set together to prevent entanglement during hookup and lift-off.

***Figure 2-32. Interim Fast Attack Vehicle (IFAV) Truck, Long Wheel Base***

## 2-35. John Deere M-Gator (Model #VGM6X01001)

**a. Applicability.** The following items in Table 2-34 are certified for all helicopters with suitable lift capacity by the US Army Soldier Systems Center:

**Table 2-34. John Deere M-Gator (Model #VGM6X01001)**

| NOMENCLATURE | MAX WEIGHT (POUNDS) | SLING SET | LINK COUNT FRONT / REAR | RECOMMENDED AIRSPEED (KNOTS) |
|---|---|---|---|---|
| John Deere M-Gator (Empty) (Model # VGM6X01001) | 1,400 | 10K | 3/30 | 90 |
| John Deere M-Gator (with load) (Model # VGM6X01001) | 2,450 | 10K | 3/40 | 90 |

**b. Materials.** The following materials are required to rig this load:

**(1)** Sling set (10,000-pound capacity).

**(2)** Tape, adhesive, pressure-sensitive, 2-inch wide roll.

**(3)** Cord, nylon, Type III, 550-pound breaking strength.

**(4)** Webbing, cotton, 1/4-inch, 80-pound breaking strength.

**c. Personnel.** Two persons can prepare and rig this load in 10 minutes.

**d. Procedures.** The following procedures apply to this load:

**(1) Preparation.** Prepare the load using the following steps:

**(a)** Secure the gas cap, tailgate, fire extinguisher, and all equipment and cargo inside the vehicle with tape, nylon cord, or lashings.

**(b)** Place tape on all the lights.

**(c)** Ensure the fuel tank is not over 3/4 full. Inspect fuel tank cap, oil filler cap, and battery caps for proper installation.

**(d)** Engage the vehicle parking brake and put the transmission in neutral.

**(e)** Ensure the front wheels are pointed straight ahead. Tie down the steering wheel, using the securing device attached under the dashboard or type III nylon cord.

**(2) Rigging.** Rig the load according to the steps in Figure 2-33.

**(3) Hookup.** The hookup team stands on the vehicle. The static wand person discharges the static electricity with the static wand. The hookup person places the apex fitting on the cargo hook. The hookup team then carefully dismounts the vehicle and remains close to the load as the helicopter removes slack from the sling legs. When successful hookup is assured, the hookup team quickly exits the area underneath the helicopter to the designated rendezvous point.

**(4) Derigging.** Derigging is the reverse of the preparation and rigging procedures in steps d (1) and d (2).

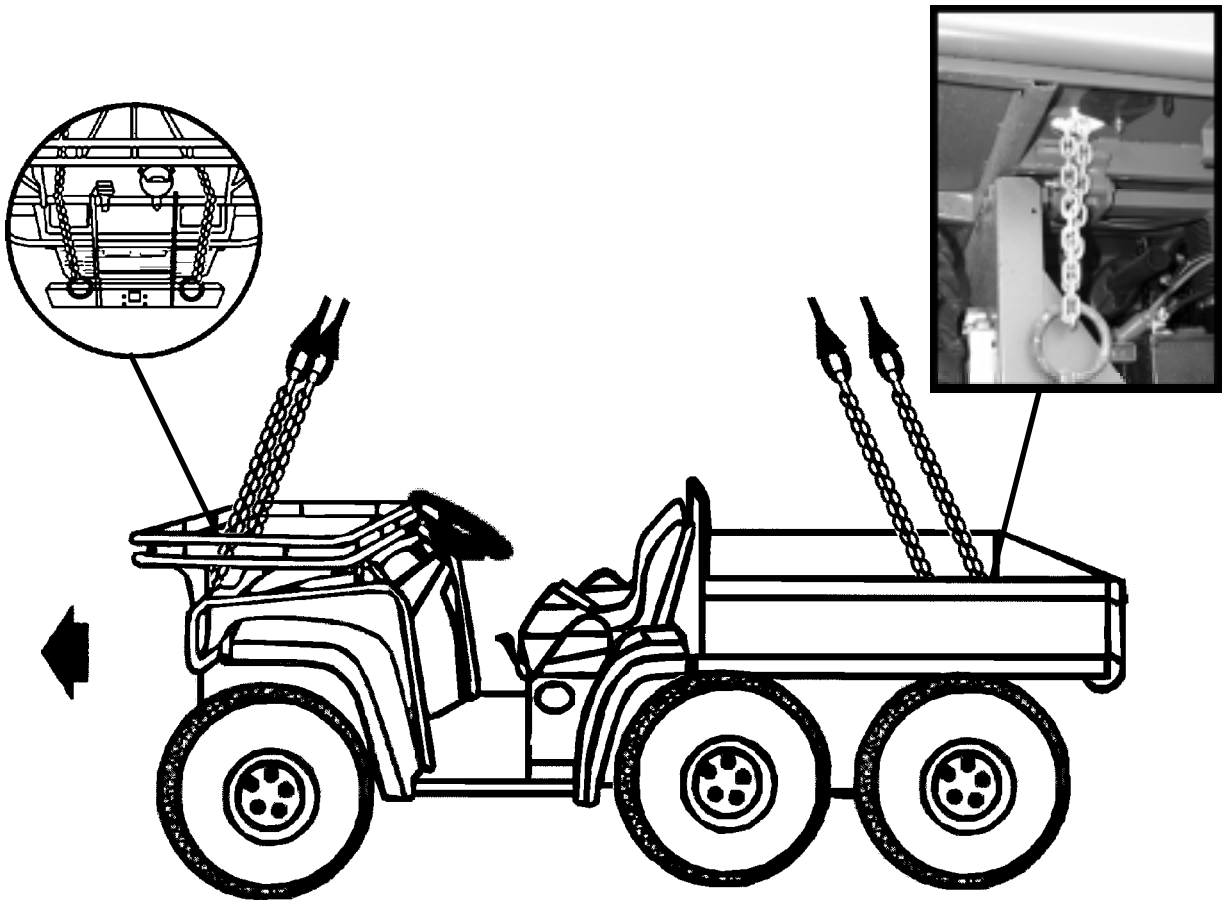

**RIGGING STEPS**

**1.** Position the apex fitting on top of the vehicle. Route outer sling legs 1 and 2 to the front of the vehicle and inner sling legs 3 and 4 to the rear. Sling legs 1 and 3 must be on the left side of the load.

**2.** Route the chain end of sling leg 1 through the litter carrier and over the brush bar to the left front lift provision. Loop the chain through the lift provision and follow the chain routing back to the grab link. Place the correct link from Table 2-34 in the grab hook. Repeat with sling leg 2 through the right front lift provision.

**3.** Slide the black circular hole covers, located in the vehicle bed, to the side. Route the chain end of sling leg 3 through the left exposed hole and the left rear lift provision. Place the correct link from Table 2-34 in the grab hook. Repeat with sling leg 4 through the right exposed hole and right rear lift provision.

**4.** Secure all excess chain with tape or Type III nylon cord.

**5.** Cluster and tie or tape (breakaway technique) the sling legs in each sling set together to prevent entanglement during hookup and lift-off.

*Figure 2-33.* ***John Deere M-Gator (Model #VGM6X01001)***

## 2-36. Two John Deere M-Gators, Model # VGM6X4D01001, Side by Side (Shotgun Method)

**a. Applicability.** The following item in Table 2-35 is certified for all helicopters with suitable lift capacity by the US Army Soldier Systems Center:

**Table 2-35. Two John Deere M-Gators, Model # VGM6X4D01001, Side by Side (Shotgun Method)**

| NOMENCLATURE | MAX WEIGHT (POUNDS) | SLING SET | LINK COUNT FRONT/REAR | RECOMMENDED AIRSPEED (KNOTS) |
|---|---|---|---|---|
| John Deere M-Gator, Model # VGM6X4D01001 | 1,450 each | 10K | Listed in Rigging steps | 75 |

**b. Materials.** The following materials are required to rig this load:

**(1)** Sling set (10,000-pound capacity (2 each)).

**(2)** Additional apex fitting from a 10,000-pound capacity sling set (NSN: 4030-01-027-2902).

**(3)** Tape, adhesive, pressure-sensitive, 2-inch wide roll.

**(4)** Cord, nylon, Type III, 550-pound breaking strength.

**(5)** Webbing, cotton, 1/4-inch, 80-pound breaking strength.

**(6)** Strap, tiedown, cargo, CGU-1/B (2 each).

**c. Personnel.** Two persons can prepare and rig this load in 15 minutes.

**d. Procedures.** The following procedures apply to this load:

**(1) Preparation.** Prepare the load using the following steps:

**(a)** Position the vehicles as close together as possible. Ensure the vehicles are facing in the same direction and the wheels of the M-Gators are lined up.

**(b)** Secure all equipment and cargo inside the vehicle with tape, nylon cord, or lashings.

**(c)** Ensure the fuel tank is not over 3/4 full. Inspect fuel tank cap, oil filler cap, and battery caps for proper installation.

**(d)** Engage the vehicle parking brake and put the transmission in neutral.

**(e)** Ensure the front wheels are pointed straight ahead. Tie down the steering wheel using the securing device under the dash or Type III nylon cord.

**(f)** Tape all lights and gauges.

**(g)** Reposition the blackout lights and the infrared LED lights so they do not interfere with the routing of the sling legs.

**(h)** Open the black sling guide covers in the bed of both vehicles.

**(2) Rigging.** Rig the load according to the steps in Figure 2-34.

**(3) Hookup.** The hookup team stands in the bed of the vehicle. The static wand person discharges the static electricity with the static wand. The hookup person places the apex fitting on the cargo hook. The hookup team then carefully dismounts the vehicle and remains close to the load as the helicopter removes slack from the sling legs. When successful hookup is assured, the hookup team quickly exits the area underneath the helicopter to the designated rendezvous point.

**(4) Derigging.** Derigging is the reverse of the preparation and rigging procedures in steps d (1) and d (2).

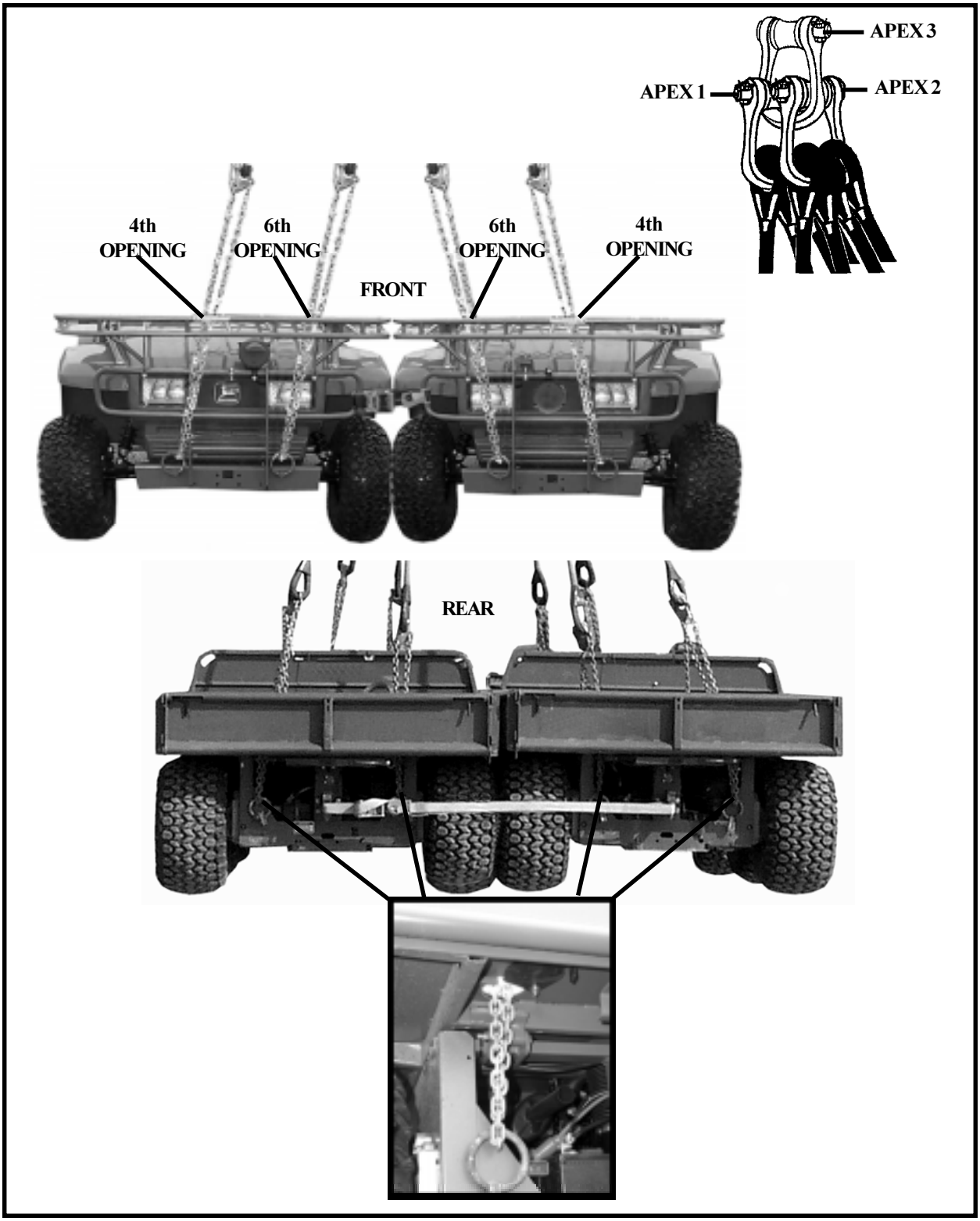


*Figure 2-34. Two John Deere M-Gators, Model # VGM6X4D01001, Side by Side (Shotgun Method)*

**RIGGING STEPS**

**1.** Position sling set 1 on top of the right vehicle with the bolt parallel to the length of the vehicle. Route sling legs 1 and 2 to the front of the vehicle and sling legs 3 and 4 to the rear. Sling legs 1 and 4 must be on the outside.

**2.** Route the chain end of sling leg 1 through the 4th opening in the front litter carrier, over the brush guard to the outside front lift provision. Loop the chain end through the outside front lift provision and back to the grabhook along the same path. Place link 3 in the grabhook.

**3.** Route the chain end of sling leg 2 through the 6th opening in the front litter carrier, over the brush guard to the inside front lift provision. Loop the chain end through the inside front lift provision and back to the grabhook along the same path. Place link 20 in the grabhook.

**4.** Route the chain end of sling leg 4 through the outside sling guide to the outside rear lift provision. Loop the chain end through the outside rear lift provision and back to the grabhook along the same path. Place link 30 in the grabhook.

**5.** Route the chain end of sling leg 3 through the inside sling guide to the inside rear lift provision. Loop the chain end through the inside rear lift provision and back to the grabhook along the same path. Place link 45 in the grabhook.

**6.** Position sling set 2 on top of the left vehicle with the bolt parallel to the length of the vehicle. Route sling legs 1 and 2 to the front of the vehicle and sling legs 3 and 4 to the rear. Sling legs 1 and 4 must be on the outside.

**7.** Route the chain end of sling leg 1 through the 4th opening in the front litter carrier, over the brush guard to the outside front lift provision. Loop the chain end through the outside front lift provision and back to the grabhook along the same path. Place link 3 in the grabhook.

**8.** Route the chain end of sling leg 2 through the 6th opening in the front litter carrier, over the brush guard to the inside front lift provision. Loop the chain end through the inside front lift provision and back to the grabhook along the same path. Place link 20 in the grabhook.

**9.** Route the chain end of sling leg 4 through the outside sling guide to the outside rear lift provision. Loop the chain end through the outside rear lift provision and back to the grabhook along the same path. Place link 30 in the grabhook.

**10.** Route the chain end of sling leg 3 through the inside sling guide to the inside rear lift provision. Loop the chain end through the inside rear lift provision and back to the grabhook along the same path. Place link 45 in the grabhook.

**11.** Route the additional apex fitting through apex fittings 1 and 2.

**12.** Secure all excess chain with tape or Type III nylon cord.

**13.** Cluster and tie or tape (breakaway technique) the sling legs in each sling set on top of the vehicle to prevent entanglement during hookup and lift-off.

**14.** Route a CGU-1/B cargo tiedown strap through the trailer hitch of both vehicles and connect the hooks together. Tighten the straps.

**15.** Route a CGU-1/B cargo tiedown strap through the inside front bar of the brush guard on both vehicles and connect the hooks together. Tighten the straps.

***Figure 2-34. Two John Deere M-Gators, Model # VGM6X4D01001, Side by Side (Shotgun Method) (continued)***

# CHAPTER 3

# CERTIFIED SINGLE-POINT RIGGING PROCEDURES FOR TRAILERS

## 3-1. INTRODUCTION

This chapter contains rigging procedures for single-point trailer loads that have been certified for sling load. Each rigging procedure is found in a paragraph that includes a description of the load, materials required for rigging, and steps to complete the procedure. An applicability paragraph is also a part of each paragraph and identifies the certified loads. The certified single-point rigging procedures for trailers are in this section. Paragraphs 3-2 through 3-31 give detailed instructions for rigging loads.

**NOTE: Reach Pendants may be used on all single point loads. A static discharge person is not required when using a Reach Pendant.**

## 3-2. M416 1/4 Ton Trailer

**a. Applicability.** The following item in Table 3-1 is certified for all helicopters with suitable lift capacity by the US Army Soldier Systems Center:

**Table 3-1. M416 1/4-Ton Trailer**

| NOMENCLATURE | MAX WEIGHT (POUNDS) | SLING SET | LINK COUNT FRONT/REAR | RECOMMENDED AIRSPEED (KNOTS) |
|---|---|---|---|---|
| M416 1/4-Ton Trailer | 1,080 | 10K | 3/3 | 90 |

**WARNING**

**THE M416 1/4-TON TRAILER MUST HAVE A GROSS WEIGHT OF 800 POUNDS OR MORE. ADD ADDITIONAL WEIGHT OR CARGO TO ANY TRAILER WHICH WEIGHS LESS THAN 800 POUNDS.**

**b. Materials.** The following materials are required to rig this load:

**(1)** Sling set (10,000-pound capacity).

**(2)** Tape, adhesive, pressure-sensitive, 2-inch wide roll.

**(3)** Cord, nylon, Type III, 550-pound breaking strength.

**(4)** Webbing, cotton, 1/4-inch, 80-pound breaking strength.

**(5)** Tie down, CGU-1B or Dacron lashing and load binder.

**c. Personnel.** Two persons can prepare and rig this load in 15 minutes.

**d. Procedures.** The following procedures apply to this load:

**(1) Preparation.** Prepare the load using the following steps:

**(a)** Lower and lock the trailer support leg in the down position.

**(b)** Tape or tie the light cable firmly to the top of the drawbar.

**(c)** Load and lash the cargo in the bed of the trailer.

**(d)** Ensure the parking brake is set.

**(2) Rigging.** Rig the load according to the steps in Figure 3-1.

**(3) Hookup.** The hookup team stands in the bed of

the trailer. The static wand person discharges the static electricity with the static wand. The hookup person places the apex fitting onto the aircraft cargo hook. The hookup team then carefully dismounts the vehicle and remains close to the load as the helicopter removes slack from the sling legs. When successful hookup is assured, the hookup team quickly exits the area underneath the helicopter to the designated rendezvous point.

**(4) Derigging.** Derigging is the reverse of the preparation and rigging procedures in steps d (1) and d (2).

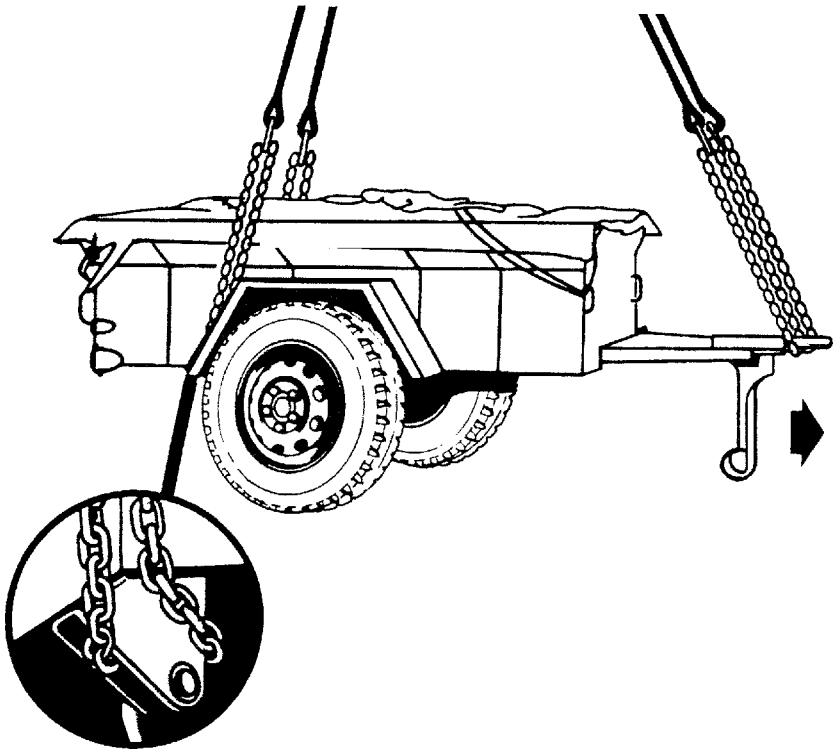

**RIGGING STEPS**

**1.** Position apex fitting in the trailer bed. Route outer sling legs 1and 2 to the front of the trailer and inner sling legs 3 and 4 to the rear. Sling legs 1 and 3 must be on the left side of the load.

**2.** Loop the chain end of sling leg 1 through the lunette. Place the correct link from Table 3-1 in the grab hook. Repeat with sling leg 2 through the lunette.

**3.** Route the chain end of sling leg 3 around the left rear spring shackle mounting bracket. Place the correct link from Table 3-1 in the grab hook. Repeat with sling leg 4 around the right rear spring shackle mounting bracket.

**4.** Tape or tie (breakaway technique) the chains of legs 3 and 4 to the next-to-last tarpaulin hold-down hook on each side.

**5.** Cluster and tie or tape (breakaway technique) all sling legs together on top of the trailer to prevent entanglement during hookup and lift-off.

*Figure 3-1. M416 1/4 Ton Trailer*

## 3-3. M101A2/A3 3/4-Ton Trailer

**a. Applicability.** The following items in Table 3-2 are certified for all helicopters with suitable lift capacity by the US Army Soldier Systems Center:

**Table 3-2. M101A2/A3 3/4-Ton Trailer**

| NOMENCLATURE | MAX WEIGHT (POUNDS) | SLING SET | LINK COUNT FRONT/REAR | RECOMMENDED AIRSPEED (KNOTS) |
|---|---|---|---|---|
| M101A2 with Accompanying Load | 3,000 | 10K | 3/40 | 65 |
| Command Version 1 Trailer | 1,958 | 10K | 3/40 | 65 |
| Command Version 2 Trailer | 1,981 | 10K | 3/40 | 65 |
| Len Cable Trailer | 2,796 | 10K | 3/40 | 65 |
| NC Support Trailer | 2,643 | 10K | 3/40 | 65 |
| Maintenance Trailer #2 | 1,430 | 10K | 3/40 | 65 |
| Battalion Spares Trailer #1 | 1,594 | 10K | 3/40 | 65 |
| Battalion Spares Trailer #2 | 2,206 | 10K | 3/40 | 65 |
| Marine Expeditionary Force Intelligence Analysis System M101A3 Trailer | 3,000 | 10K | 15/3 | 65 |
| Technical Control and Analysis Center Production Improvement Program M101A3 Trailer | 3,000 | 10K | 15/3 | 65 |

**WARNINGS**

**THE M101A2 3/4-TON TRAILER MUST HAVE A GROSS WEIGHT OF 1,575 POUNDS OR MORE. ADD ADDITIONAL WEIGHT OR CARGO TO ANY TRAILER WHICH WEIGHS LESS THAN 1,575 POUNDS. PLACE THE WEIGHT NEAR THE CENTER OF THE TRAILER.**

**MAXIMUM WEIGHT DURING SLING LOAD OPERATIONS FOR ANY VARIANT OF THE M101A2 3/4-TON TRAILER IS 3,000 POUNDS.**

**b. Materials.** The following materials are required to rig this load:

**(1)** Sling set (10,000-pound capacity).

**(2)** Tape, adhesive, pressure-sensitive, 2-inch wide roll.

**(3)** Cord, nylon, Type III, 550-pound breaking strength.

**(4)** Webbing, cotton, 1/4-inch, 80-pound breaking strength.

**(5)** Tie down, CGU-1B or dacron lashing and load binder.

**c. Personnel.** Two persons can prepare and rig this load in 15 minutes.

**d. Procedures.** The following procedures apply to this load:

**(1) Preparation.** Prepare the load using the following steps:

**(a)** Fasten the tailgate in the open position with the chains on each side hooked through the keeper.

**(b)** Remove the front rack and place it in the bed of

the trailer. Place the accompanying load on top of the front rack. Secure the accompanying load to the trailer using tie-down straps. Route the straps diagonally across the load from the tailgate hinge to the front lifting shackles.

**(c)** Tape or tie the light cable firmly to the top of the drawbar.

**(d)** Ensure the tongue wheel is in the down and locked position and the parking brake is set..

**(2) Rigging.** Rig the load according to the steps in Figure 3-2.

**(3) Hookup.** The hookup team stands in the bed of the trailer. The static wand person discharges the static electricity with the static wand. The hookup person places the apex fitting onto the aircraft cargo hook. The hookup team then carefully dismounts the vehicle and remains close to the load as the helicopter removes slack from the sling legs. When successful hookup is assured, the hookup team quickly exits the area underneath the helicopter to the designated rendezvous point.

**(4) Derigging.** Derigging is the reverse of the preparation and rigging procedures in steps d (1) and d (2).

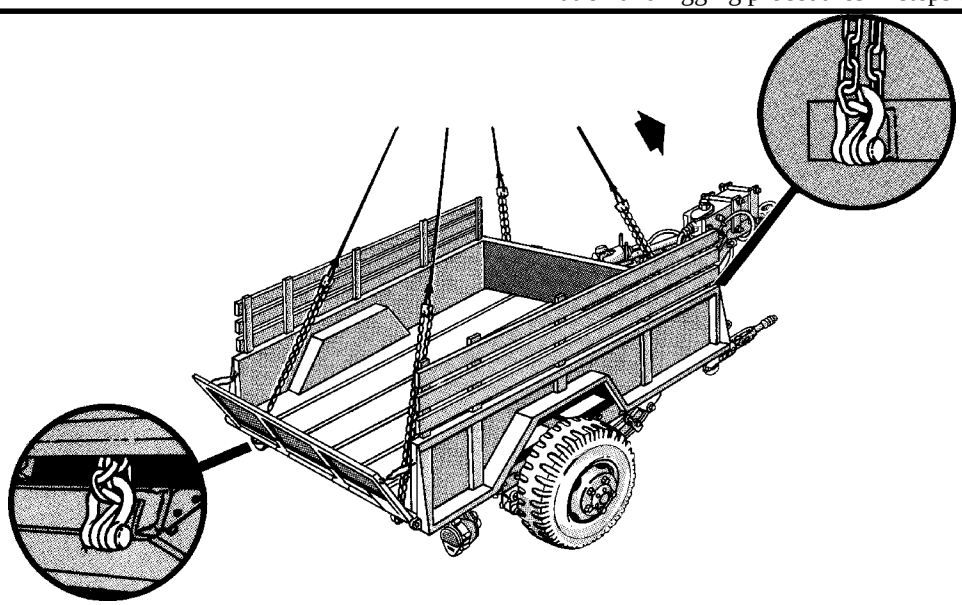

**RIGGING STEPS**

**1.** Position apex fitting in the trailer bed. Route outer sling legs 1and 2 to the front of the trailer and inner sling legs 3 and 4 to the rear. Route the rear chains through the opening between the tailgate and the trailer bed. Sling legs 1 and 3 must be on the left side of the load.

**2.** Loop the chain end of sling leg 1 through the left front lift provision located on the front of the trailer. Place the correct link from Table 3-2 in the grab hook. Repeat with sling leg 2 through the right front lift provision. Secure excess chain with tape or Type III nylon cord.

**3.** Route the chain end of sling leg 3 through the left rear lift provision. Place the correct link from Table 3-2 in the grab hook. Repeat with sling leg 4 through the right rear lift provision. Secure excess chain with tape or Type III nylon cord.

**4.** Tape or tie (breakaway technique) the chains of legs 3 and 4 to the side racks to keep the chains from binding between the tailgate and trailer bed.

**5.** Cluster and tie or tape (breakaway technique) all sling legs together on top of the trailer to prevent entanglement during hookup and lift-off.

*Figure 3-2. M101A2/A3 3/4-Ton Trailer*

## 3-4. M1048/M1073 Trailer

**a. Applicability.** The following item in Table 3-3 is certified for all helicopters with suitable lift capacity by the US Army Natick Research, Development, and Engineering Center:

**Table 3-3. M1048/M1073 Trailer**

| NOMENCLATURE | MAX WEIGHT (POUNDS) | SLING SET | LINK COUNT FRONT/REAR | RECOMMENDED AIRSPEED (KNOTS) |
|---|---|---|---|---|
| M1048 Trailer | 5,880 | 10K | 44/6 | 120 |
| M1073 Trailer | 6,260 | 15K | 58/3 | 110 |

**b. Materials.** The following materials are required to rig this load:

**(1)** Sling set (10,000-pound capacity).

**OR**

**(2)** Multileg sling set (15,000-pound capacity).

**(3)** Tape, adhesive, pressure-sensitive, 2-inch wide roll.

**(4)** Cord, nylon, Type III, 550-pound breaking strength.

**(5)** Webbing, cotton, 1/4-inch, 80-pound breaking strength.

**c. Personnel.** Two persons can prepare and rig this load in 15 minutes.

**d. Procedures.** The following procedures apply to this load:

**(1) Preparation.** Prepare the load using the following steps:

**(a)** Secure all loose chains, hoses, and cables to the trailer drawbar with Type III nylon cord.

**(b)** Secure any lids, caps, or loose items with tape or Type III nylon cord.

**(c)** Tape or tie the light cable firmly to the top of the drawbar.

**(d)** Place the leveling jacks in the down position. Ensure the base of the leveling jacks are not extended. Stow the jack handles and secure with Type III nylon cord. The trailer should lean downward at the lunette end.

**(e)** Ensure the parking brake is set.

**(2) Rigging.** Rig the load according to the steps in Figure 3-3.

**(3) Hookup.** The hookup team stands in the bed of the trailer. The static wand person discharges the static electricity with the static wand. The hookup person places the apex fitting onto the aircraft cargo hook. The hookup team then carefully dismounts the vehicle and remains close to the load as the helicopter removes slack from the sling legs. When successful hookup is assured, the hookup team quickly exits the area underneath the helicopter to the designated rendezvous point.

**(4) Derigging.** Derigging is the reverse of the preparation and rigging procedures in steps d (1) and d (2).

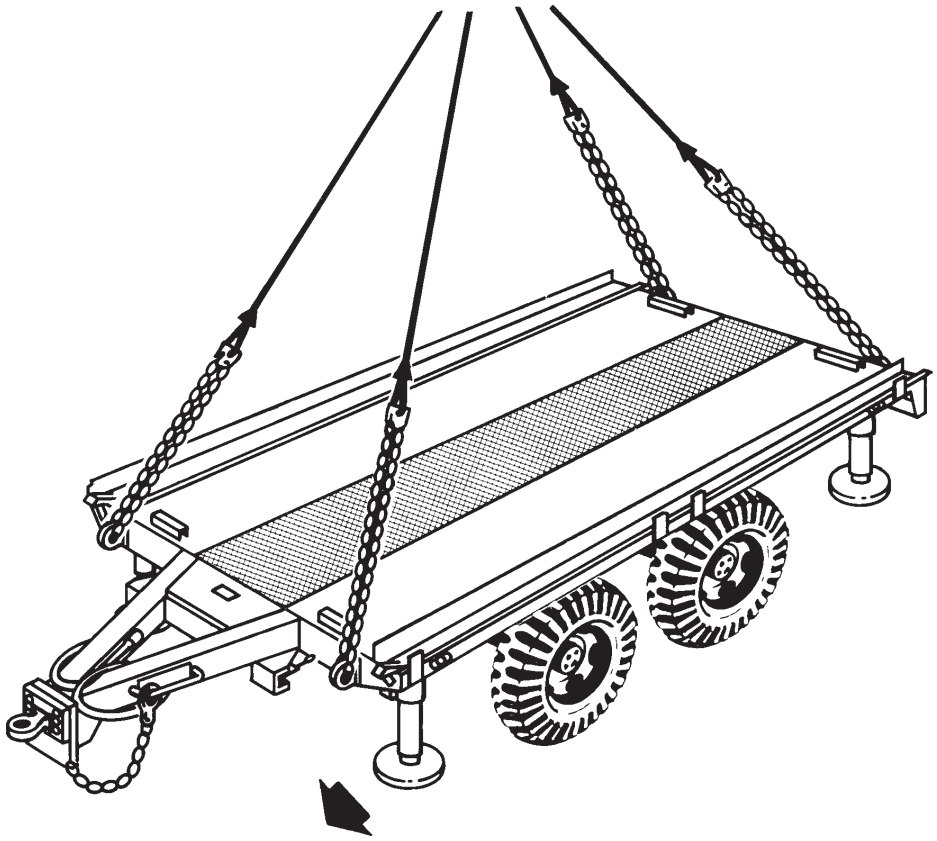

**RIGGING STEPS**

**1.** Position apex fitting in the trailer bed. Route outer sling legs 1and 2 to the front of the trailer and inner sling legs 3 and 4 to the rear. Sling legs 1 and 3 must be on the left side of the load.

**2.** Loop the chain end of sling leg 1 through the left front lift provision located on the left front corner of the trailer. Place the correct link from Table 3-3 in the grab hook. Repeat with sling leg 2 through the right front lift provision.

**3.** Route the chain end of sling leg 3 through the left rear lift provision. Place the correct link from Table 3-3 in the grab hook. Repeat with sling leg 4 through the right rear lift provision. Secure excess chain with tape or Type III nylon cord.

**4.** Cluster and tie or tape (breakaway technique) all sling legs together on top of the trailer to prevent entanglement during hookup and lift-off. Secure excess chain with tape or Type III nylon cord.

***Figure 3-3. M1048/M1073 Trailer***

## 3-5. M1048 Trailer with Tracked Suspension System (TSS)

**a. Applicability.** The following item in Table 3-4 is certified for all helicopters with suitable lift capacity by the US Army Natick Research, Development, and Engineering Center:

**Table 3-4. M1048 Trailer (TSS)**

| NOMENCLATURE | MAX WEIGHT (POUNDS) | SLING SET | LINK COUNT FRONT/REAR | RECOMMENDED AIRSPEED (KNOTS) |
|---|---|---|---|---|
| M1048 Trailer (TSS) | 7,880 | 10K | 26/3 | 120 |

**b. Materials.** The following materials are required to rig this load:

**(1)** Sling set (10,000-pound capacity).

**(2)** Tape, adhesive, pressure-sensitive, 2-inch wide roll.

**(3)** Cord, nylon, Type III, 550-pound breaking strength.

**(4)** Webbing, cotton, 1/4-inch, 80-pound breaking strength.

**c. Personnel.** Two persons can prepare and rig this load in 10 minutes.

**d. Procedures.** The following procedures apply to this load:

**(1) Preparation.** Prepare the load using the following steps:

**(a)** Secure all loose chains, hoses, and cables to the trailer drawbar with Type III nylon cord.

**(b)** Secure any lids, caps, or loose items with tape or Type III nylon cord.

**(c)** Tape or tie the light cable firmly to the top of the drawbar.

**(d)** Place the front leveling jacks in the down position. Ensure the base of the leveling jacks are not extended. Stow the jack handles and secure with Type III nylon cord. Secure the rear leveling jacks in the up position. The trailer should lean downward at the lunette end.

**(e)** Ensure the parking brake is set.

**(2) Rigging.** Rig the load according to the steps in Figure 3-4.

**(3) Hookup.** The hookup team stands in the bed of the trailer. The static wand person discharges the static electricity with the static wand. The hookup person places the apex fitting onto the aircraft cargo hook. The hookup team then carefully dismounts the vehicle and remains close to the load as the helicopter removes slack from the sling legs. When successful hookup is assured, the hookup team quickly exits the area underneath the helicopter to the designated rendezvous point.

**(4) Derigging.** Derigging is the reverse of the preparation and rigging procedures in steps d (1) and d (2).

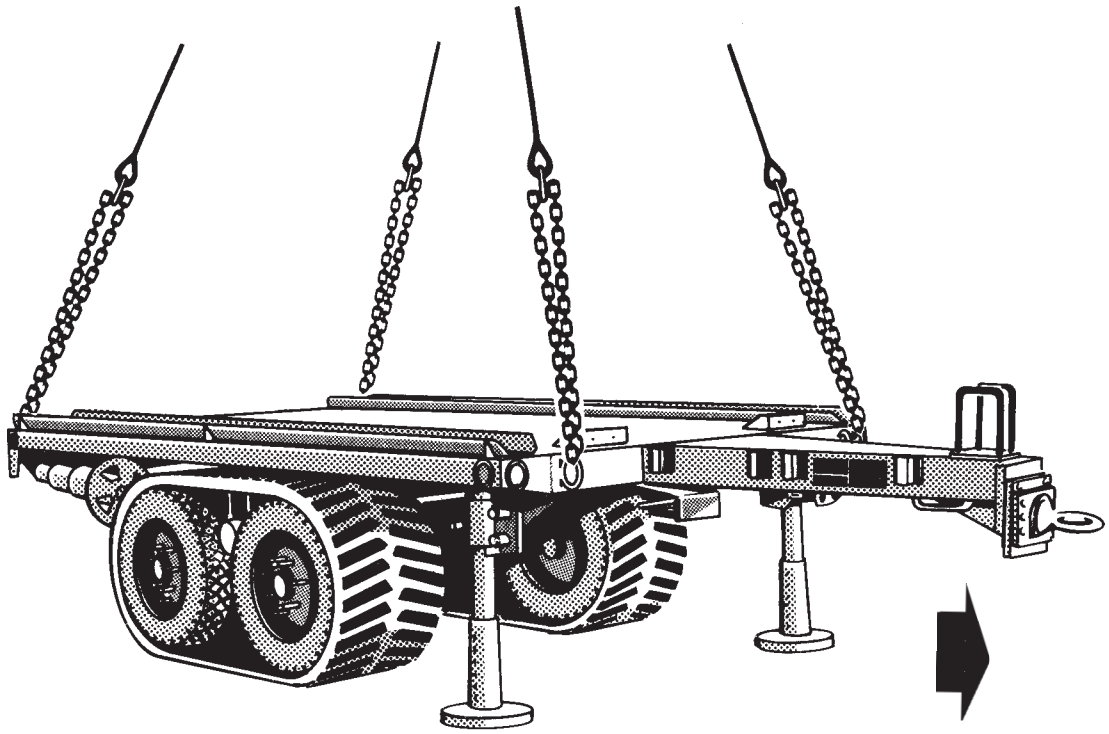

**RIGGING STEPS**

**1.** Position apex fitting in the trailer bed. Route outer sling legs 1and 2 to the front of the trailer and inner sling legs 3 and 4 to the rear. Sling legs 1 and 3 must be on the left side of the load.

**2.** Loop the chain end of sling leg 1 through the left front lift provision located on the left front corner of the trailer. Place the correct link from Table 3-4 in the grab hook. Repeat with sling leg 2 through the right front lift provision. Secure excess chain with tape or Type III nylon cord.

**3.** Route the chain end of sling leg 3 through the left rear lift provision. Place the correct link from Table 3-4 in the grab hook. Repeat with sling leg 4 through the right rear lift provision.

**4.** Cluster and tie or tape (breakaway technique) all sling legs together on top of the trailer to prevent entanglement during hookup and lift-off. Secure excess chain with tape or Type III nylon cord.

***Figure 3-4. M1048 Trailer (TSS)***

## 3-6. M149A2 Water Trailer (USMC)

**a. Applicability.** The following item in Table 3-5 is certified for all helicopters with suitable lift capacity by the US Army Natick Research, Development, and Engineering Center:

**Table 3-5. M149A2 Water Trailer**

| NOMENCLATURE | MAX WEIGHT (POUNDS) | SLING SET | LINK COUNT FRONT/REAR | RECOMMENDED AIRSPEED (KNOTS) |
|---|---|---|---|---|
| M149A2 Water Trailer Modified with Clevis Type Lifting Provisions | 6,100 | 15K | 3/11 | 90 |

**NOTES:**

**1. This load is only certified for sling loading at its full weight of 6,100 pounds.**

**2. The rigging procedures for the M149 Water Trailer (US Army) are located in chapter 16.**

**b. Materials.** The following materials are required to rig this load:

**(1)** Multileg sling set (15,000-pound capacity).

**(2)** Tape, adhesive, pressure-sensitive, 2-inch wide roll.

**(3)** Cord, nylon, Type III, 550-pound breaking strength.

**(4)** Webbing, cotton, 1/4-inch, 80-pound breaking strength.

**(5)** Felt sheet, cattle hair, Type IV, 1/2-inch or suitable substitute.

**c. Personnel.** Two persons can prepare and rig this load in 10 minutes.

**d. Procedures.** The following procedures apply to this load:

**(1) Preparation.** Prepare the load using the following steps:

**(a)** Secure all loose chains, hoses, and cables to the trailer drawbar with Tape or Type III nylon cord.

**(b)** Ensure the tongue wheel is locked in the down position.

**(c)** Close the tank lid and secure.

**(d)** Ensure that one trailer brake is set.

**(2) Rigging.** Rig the load according to the steps in Figure 3-5.

**(3) Hookup.** The hookup team stands on the trailer fenders or the front of the trailer. The static wand person discharges the static electricity with the static wand. The hookup person places the apex fitting onto the aircraft cargo hook. The hookup team then carefully dismounts the vehicle and remains close to the load as the helicopter removes slack from the sling legs. When successful hookup is assured, the hookup team quickly exits the area underneath the helicopter to the designated rendezvous point.

**(4) Derigging.** Derigging is the reverse of the preparation and rigging procedures in steps d (1) and d (2).

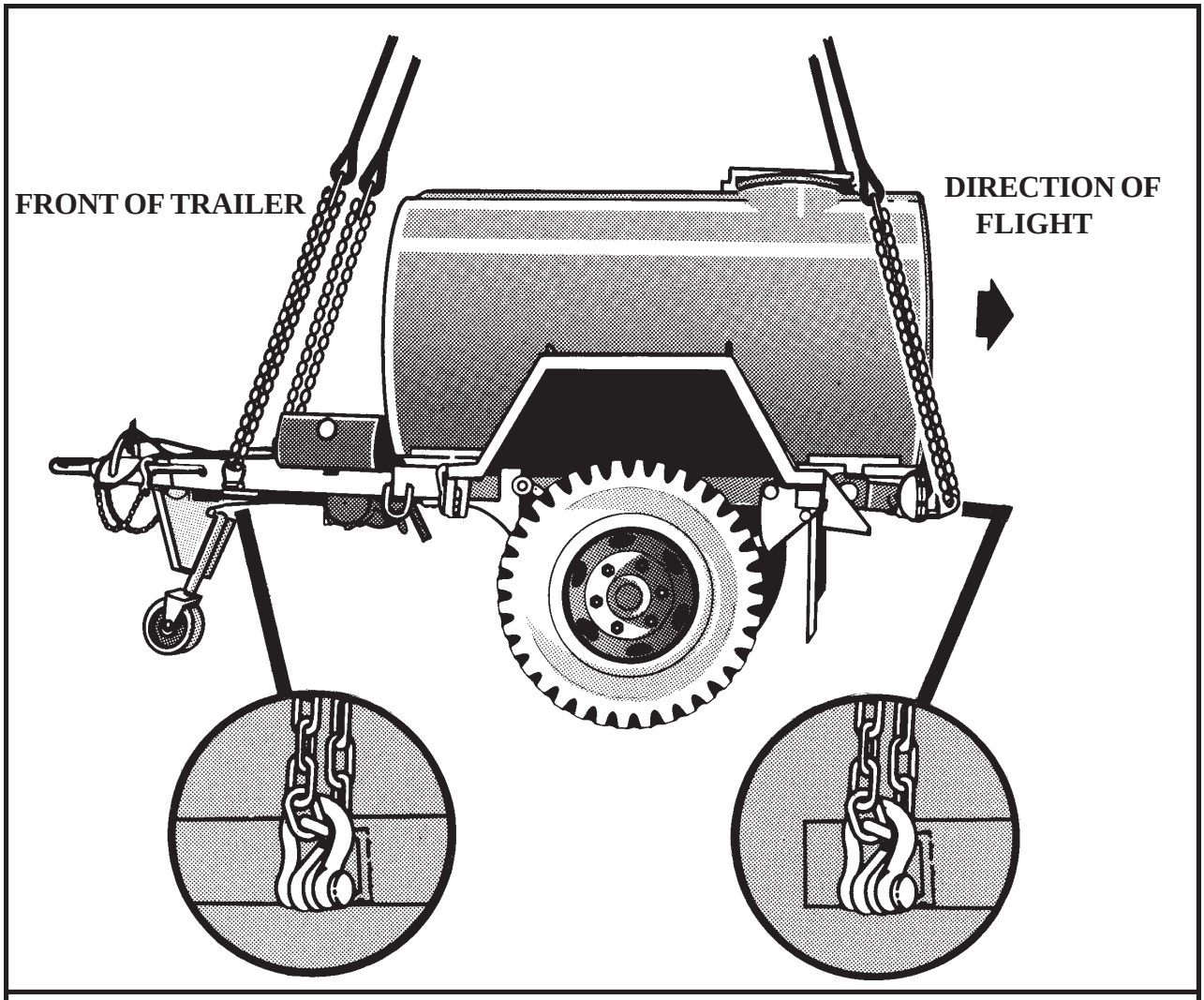


**RIGGING STEPS**

**1.** Position apex fitting on top of the water tank. Route outer sling legs 1and 2 to the front of the trailer and inner sling legs 3 and 4 to the rear. Sling legs 1 and 3 must be on the left side of the load.

**2.** Loop the chain end of sling leg 1 through the left front lift provision located on the left front corner of the trailer. Place the correct link from Table 3-5 in the grab hook. Repeat with sling leg 2 through the right front lift provision.

**3.** Route the chain end of sling leg 3 through the left rear lift provision. Place the correct link from Table 3-5 in the grab hook. Repeat with sling leg 4 through the right rear lift provision. Pad the rear slings where they contact the water tank. Secure excess chain with tape or Type III nylon cord.

**4.** Position the two rear slings around the side of the tank so that the sling legs cradle the tank.

**5.** Cluster and tie or tape (breakaway technique) all sling legs together on top of the tank to prevent entanglement during hookup and lift-off.

***Figure 3-5. M149A2 Water Trailer***

## 3-7. M989 Heavy-Expanded Mobility Ammunition Trailer (HEMAT)

**a. Applicability.** The following item in Table 3-6 is certified for all helicopters with suitable lift capacity by the US Army Natick Research, Development, and Engineering Center:

**Table 3-6. M989 HEMAT**

| NOMENCLATURE | MAX WEIGHT (POUNDS) | SLING SET | LINK COUNT FRONT/REAR | RECOMMENDED AIRSPEED (KNOTS) |
|---|---|---|---|---|
| M989 HEMAT (Empty) | 7,640 | 10K | 40/4 | 120 |

**NOTE: This load is only certified for sling loading at its empty weight.**

**b. Materials.** The following materials are required to rig this load:

**(1)** Sling set (10,000-pound capacity).

**(2)** Tape, adhesive, pressure-sensitive, 2-inch wide roll.

**(3)** Cord, nylon, Type III, 550-pound breaking strength.

**(4)** Webbing, cotton, 1/4-inch, 80-pound breaking strength.

**(5)** Tie-down CGU-1/B (4 each).

**c. Personnel.** Two persons can prepare and rig this load in 15 minutes.

**d. Procedures.** The following procedures apply to this load:

**(1) Preparation.** Prepare the load using the following steps:

**(a)** At each corner of the trailer, slide the lifting provisions out until they are completely extended. Do not lift the trailer unless the provisions are fully extended and secured in position.

**(b)** Remove the side and end panels. Place two panels side by side on the trailer so that the panel ends are approximately 10 inches from the front of the trailer. Make sure the panels are positioned lengthwise on the trailer. Place the remaining panels on top of the respective panels on the trailer.

**(c)** Secure the panels on the trailer with the tie-down straps. Attach the hook end of one tie-down strap to a tie-down ring on the trailer bed beside the panels approximately 1 foot from the end of the panels. Connect and tighten the ratchet end to a tie-down ring on the other side of the panels. Secure loose end of strap. Repeat with a second tie-down strap at the other end of the panels.

**(d)** To secure the panels lengthwise, route the hook end of one tie-down strap around the vertical metal stiffeners on the top panel of the stack of panels on the left side of the trailer. Attach the hook end to a tie-down ring on the front end of the trailer bed. Connect and tighten the ratchet end to a tie-down ring on the other end of the stack of panels. Secure loose end of strap. Repeat with a second tie-down strap on the other stack of panels.

**(e)** Tape or tie the intervehicular cable, hoses, and safety chains firmly to the top of the drawbar with tape or Type III nylon cord.

**(f)** Engage the parking brake.

**(2) Rigging.** Rig the load according to the steps in Figure 3-6.

**(3) Hookup.** The hookup team stands on the bed of the trailer. The static wand person discharges the static electricity with the static wand. The hookup person places the apex fitting onto the aircraft cargo hook. The hookup team then carefully dismounts the vehicle and remains close to the load as the helicopter removes slack from the sling legs. When successful hookup is assured, the

hookup team quickly exits the area underneath the helicopter to the designated rendezvous point.

**(4) Derigging.** Derigging is the reverse of the preparation and rigging procedures in steps d (1) and d (2).

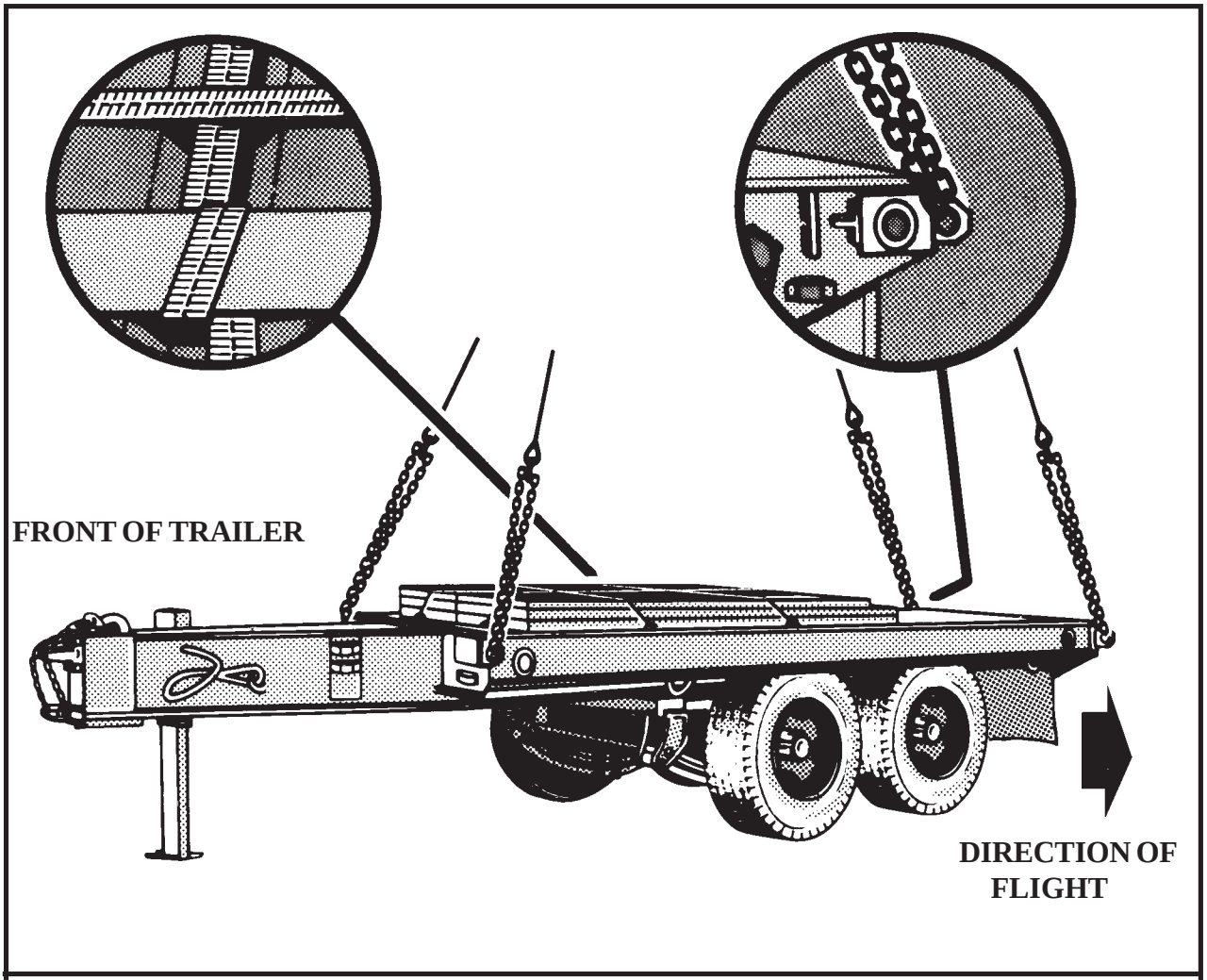


**RIGGING STEPS**

**1.** Position apex fitting on top of the trailer. Route outer sling legs 1and 2 to the front of the trailer and inner sling legs 3 and 4 to the rear. Sling legs 1 and 3 must be on the left side of the load.

**2.** Loop the chain end of sling leg 1 through the left front lift provision located on the left front corner of the trailer. Place the correct link from Table 3-6 in the grab hook. Repeat with sling leg 2 through the right front lift provision. Secure excess chain with Type III nylon cord.

**3.** Route the chain end of sling leg 3 through the left rear lift provision. Place the correct link from Table 3-6 in the grab hook. Repeat with sling leg 4 through the right rear lift provision. Secure excess chain with tape or Type III nylon cord.

**4.** Cluster and tie or tape (breakaway technique) all sling legs together on top of the trailer to prevent entanglement during hookup and lift-off.

*Figure 3-6. M989 HEMAT*

## 3-8. M989A1 Heavy-Expanded Mobility Ammunition Trailer (HEMAT II)

**a. Applicability.** The following item in Table 3-7 is certified for all helicopters with suitable lift capacity by the US Army Natick Research, Development, and Engineering Center:

**Table 3-7. M989A1 HEMAT II**

| NOMENCLATURE | MAX WEIGHT (POUNDS) | SLING SET | LINK COUNT FRONT/REAR | RECOMMENDED AIRSPEED (KNOTS) |
|---|---|---|---|---|
| M989A1 HEMAT II | 10,650 | 25K | 15/3 | 125 |

**CAUTION**

**The following rigging procedures are for the M989A1 HEMAT II only. Do not use these procedures when rigging the M989 HEMAT.**

**b. Materials.** The following materials are required to rig this load:

**(1)** Sling set (25,000-pound capacity).

**(2)** Tape, adhesive, pressure-sensitive, 2-inch wide roll.

**(3)** Cord, nylon, Type III, 550-pound breaking strength.

**(4)** Webbing, cotton, 1/4-inch, 80-pound breaking strength.

**(5)** Tie-down CGU-1/B (8 each).

**(6)** Felt sheet, cattle hair, Type IV, 1/2-inch or suitable substitute.

**c. Personnel.** Two persons can prepare and rig this load in 10 minutes.

**d. Procedures.** The following procedures apply to this load:

**(1) Preparation.** Prepare the load using the following steps:

**(a)** Inspect the lift provisions at the four upper corners of the cargo bed.

**(b)** Raise the trailer tongue and secure it in the up position with a CGU-1/B.

**(c)** Secure the brake hose, safety hose, intervehicular cables, and safety chains to the trailer and tongue with tape or Type III nylon cord.

**(d)** Engage the steering lockout pin.

**(e)** Secure the side panels to the cargo deck with CGU-1/Bs.

**(2) Rigging.** Rig the load according to the steps in Figure 3-7.

**(3) Hookup.** The hookup team stands on the bed of the trailer. The static wand person discharges the static electricity with the static wand. The hookup person places the apex fitting onto the aircraft cargo hook. The hookup team then carefully dismounts the vehicle and remains close to the load as the helicopter removes slack from the sling legs. When successful hookup is assured, the hookup team quickly exits the area underneath the helicopter to the designated rendezvous point.

**CAUTION**

**Brief the aircrew to relax sling leg tension and hover to the side of the load when releasing the apex fitting to prevent damage to the panels on top of the trailer.**

**(4) Derigging.** Derigging is the reverse of the preparation and rigging procedures in steps d (1) and d (2).

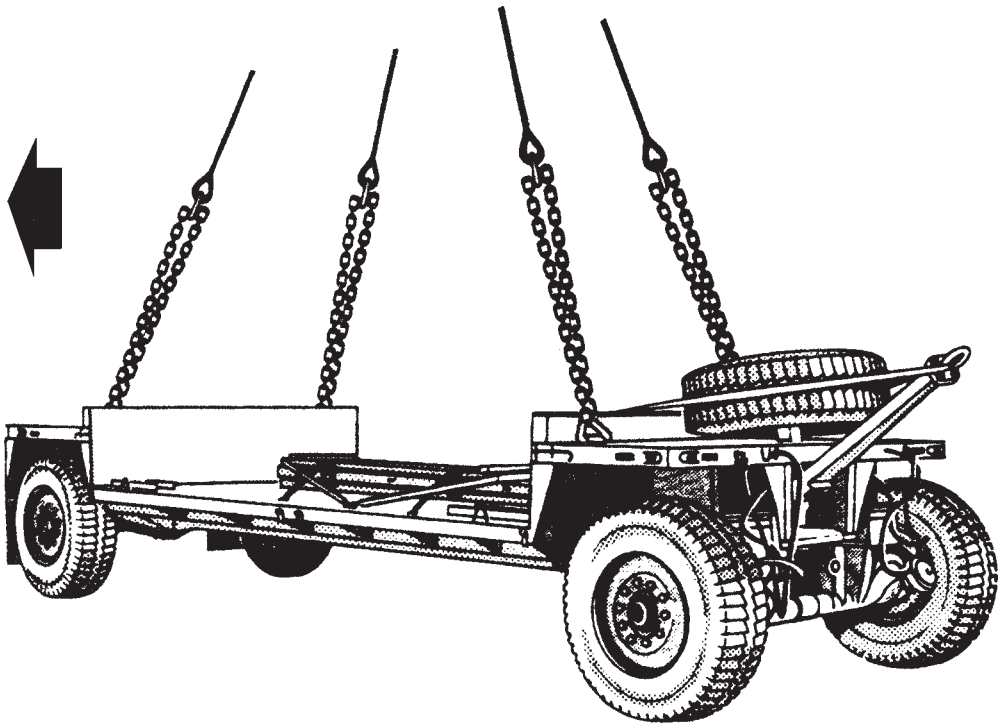

**RIGGING STEPS**

**1.** Position apex fitting on top of the trailer. Route outer sling legs 1and 2 to the front of the trailer and inner sling legs 3 and 4 to the rear. Sling legs 1 and 3 must be on the left side of the load.

**2.** Loop the chain end of sling leg 1 through the left front lift provision located on the left front corner of the trailer. Place the correct link from Table 3-7 in the grab hook. Repeat with sling leg 2 through the right front lift provision. Secure excess chain with Type III nylon cord.

**3.** Route the chain end of sling leg 3 through the left rear lift provision. Place the correct link from Table 3-7 in the grab hook. Repeat with sling leg 4 through the right rear lift provision. Secure excess chain with tape or Type III nylon cord.

**4.** Cluster and tie or tape (breakaway technique) all sling legs together on top of the trailer to prevent entanglement during hookup and lift-off.

***Figure 3-7. M989A1 HEMAT II***

## 3-9. Mk14, Trailer, Container Hauler

**a. Applicability.** The following item in Table 3-8 is certified for all helicopters with suitable lift capacity by the US Army Natick Research, Development, and Engineering Center:

**Table 3-8. Mk14, Trailer, Container Hauler**

| NOMENCLATURE | MAX WEIGHT (POUNDS) | SLING SET | LINK COUNT FRONT/REAR | RECOMMENDED AIRSPEED (KNOTS) |
|---|---|---|---|---|
| Mk14, Trailer, Container Hauler | 16,000 | 40K | 3/3 | 100 |

**b. Materials.** The following materials are required to rig this load:

**(1)** Sling set (40,000-pound capacity).

**(2)** Tape, adhesive, pressure-sensitive, 2-inch wide roll.

**(3)** Cord, nylon, Type III, 550-pound breaking strength.

**(4)** Webbing, cotton, 1/4-inch, 80-pound breaking strength.

**c. Personnel.** Two persons can prepare and rig this load in 15 minutes.

**d. Procedures.** The following procedures apply to this load:

**(1) Preparation.** Prepare the load using the following steps:

**(a)** Disengage the Mkl4 from the Mk48 prime mover according to the operator's manual.

**(b)** Secure all hoses with tape or nylon cord.

**(c)** Tape all lights, reflectors, and glass fixtures.

**(d)** Remove the safety retainer pins from the lifting eyelets located under the doors in the bed of the trailer. Unscrew the lifting eyelets from their stored position and reinsert the lifting eyelets so that the eyelet portion is accessible from the bed of the trailer through the access doors. Screw the lifting eyelets all the way in and back out one full turn. Reinsert the safety retainer pins to prevent the lifting eyelets from backing out in flight.

**(e)** Make sure all tool compartment doors are secured shut.

**(2) Rigging.** Rig the load according to the steps in Figure 3-8.

**(3) Hookup.** The hookup team stands on the bed of the trailer. The static wand person discharges the static electricity with the static wand. The hookup person places the apex fitting onto the aircraft cargo hook. The hookup team then carefully dismounts the vehicle and remains close to the load as the helicopter removes slack from the sling legs. When successful hookup is assured, the hookup team quickly exits the area underneath the helicopter to the designated rendezvous point.

**(4) Derigging.** Derigging is the reverse of the preparation and rigging procedures in steps d (1) and d (2).

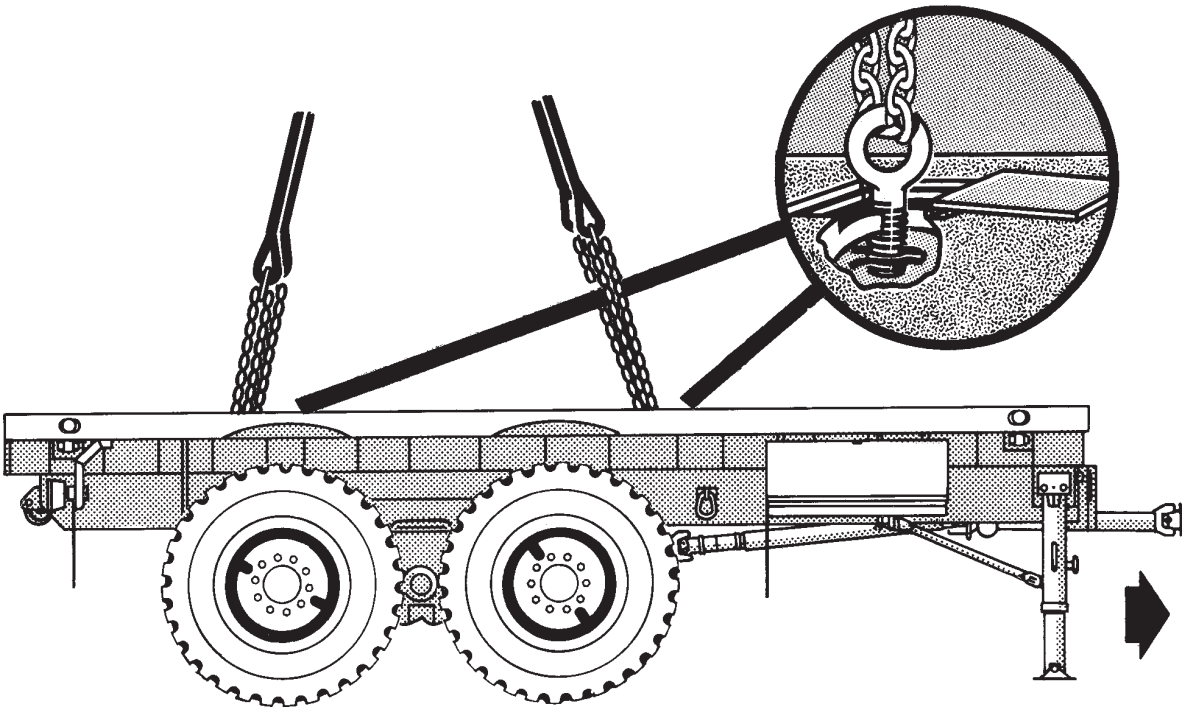

**RIGGING STEPS**

**1.** Position apex fitting on top of the trailer. Route outer sling legs 1and 2 to the front of the trailer and inner sling legs 3 and 4 to the rear. Sling legs 1 and 3 must be on the left side of the load.

**2.** Loop the chain end of sling leg 1 through the left front lift provision located on the left front corner of the trailer. Place the correct link from Table 3-8 in the grab hook. Repeat with sling leg 2 through the right front lift provision. Secure excess chain with Type III nylon cord.

**3.** Route the chain end of sling leg 3 through the left rear lift provision. Place the correct link from Table 3-8 in the grab hook. Repeat with sling leg 4 through the right rear lift provision. Secure excess chain with tape or Type III nylon cord.

**4.** Cluster and tie or tape (breakaway technique) all sling legs together on top of the trailer to prevent entanglement during hookup and lift-off.

***Figure 3-7. Mk14, Trailer, Container Hauler***

## 3-10. Mk15, Trailer, Wrecker /Recovery

**a. Applicability.** The following item in Table 3-9 is certified for all helicopters with suitable lift capacity by the US Army Natick Research, Development, and Engineering Center:

**Table 3-9. Mk15, Trailer, Wrecker /Recovery**

| NOMENCLATURE | MAX WEIGHT (POUNDS) | SLING SET | LINK COUNT FRONT/REAR | RECOMMENDED AIRSPEED (KNOTS) |
|---|---|---|---|---|
| Mk15, Trailer, Wrecker /Recovery | 26,000 | 40K | 3/10 | 90 |

**b. Materials.** The following materials are required to rig this load:

**(1)** Sling set (40,000-pound capacity).

**(2)** Tape, adhesive, pressure-sensitive, 2-inch wide roll.

**(3)** Cord, nylon, Type III, 550-pound breaking strength.

**(4)** Webbing, cotton, 1/4-inch, 80-pound breaking strength.

**(5)** Tie-down strap, cargo, CGU-1/B, as required.

**c. Personnel.** Two persons can prepare and rig this load in 30 minutes.

**d. Procedures.** The following procedures apply to this load:

**(1) Preparation.** Prepare the load using the following steps:

**(a)** Disengage the Mkl5 from the Mk48 prime mover according to the operator's manual.

**(b)** Remove the A-frame from the rear of the trailer.

**(c)** Secure all hoses with tape or nylon cord.

**(d)** Tape all lights, reflectors, and glass fixtures.

**(e)** Remove the safety retainer pins from the lifting eyelets located under the doors in the bed of the trailer. Unscrew the lifting eyelets from their stored position and reinsert the lifting eyelets so that the eyelet portion is accessible from the bed of the trailer through the access doors. Screw the lifting eyelets all the way in and back out one full turn. Reinsert the safety retainer pins to prevent the lifting eyelets from backing out in flight.

**(f)** Make sure all tool compartment doors are secured shut.

**(2) Rigging.** Rig the load according to the steps in Figure 3-9.

**(3) Hookup.** The hookup team stands on the bed of the trailer. The static wand person discharges the static electricity with the static wand. The hookup person places the apex fitting onto the aircraft cargo hook. The hookup team then carefully dismounts the vehicle and remains close to the load as the helicopter removes slack from the sling legs. When successful hookup is assured, the hookup team quickly exits the area underneath the helicopter to the designated rendezvous point.

**(4) Derigging.** Derigging is the reverse of the preparation and rigging procedures in steps d (1) and d (2).

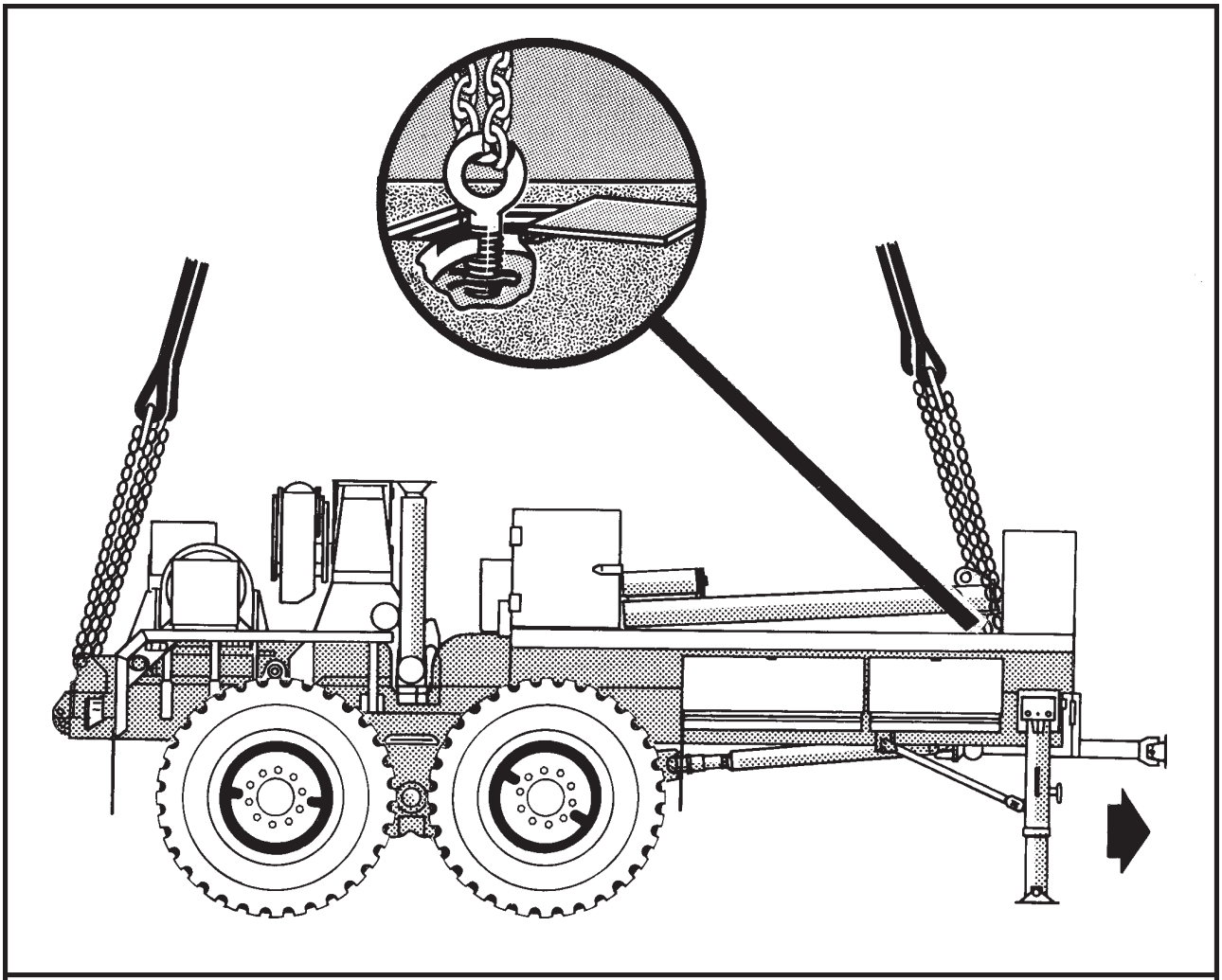

**RIGGING STEPS**

**1.** Position apex fitting on top of the trailer. Route outer sling legs 1and 2 to the front of the trailer and inner sling legs 3 and 4 to the rear. Sling legs 1 and 3 must be on the left side of the load.

**2.** Loop the chain end of sling leg 1 through the left front lift provision located on the left front corner of the trailer. Place the correct link from Table 3-9 in the grab hook. Repeat with sling leg 2 through the right front lift provision. Secure excess chain with Type III nylon cord.

**3.** Route the chain end of sling leg 3 through the left rear lift provision. Place the correct link from Table 3-9 in the grab hook. Repeat with sling leg 4 through the right rear lift provision. Secure excess chain with tape or Type III nylon cord.

**4.** Cluster and tie or tape (breakaway technique) all sling legs together on top of the trailer to prevent entanglement during hookup and lift-off.

*Figure 3-9. Mk15, Trailer, Wrecker/Recovery*

## 3-11. Mk16, Trailer, Fifth-Wheel Adapter

**a. Applicability.** The following item in Table 3-10 is certified for all helicopters with suitable lift capacity by the US Army Natick Research, Development, and Engineering Center:

**Table 3-10. Mk16, Trailer, Fifth-Wheel Adapter**

| NOMENCLATURE | MAX WEIGHT (POUNDS) | SLING SET | LINK COUNT FRONT/REAR | RECOMMENDED AIRSPEED (KNOTS) |
|---|---|---|---|---|
| Mk16, Trailer, Fifth-Wheel Adapter | 16,000 | 40K | 3/3 | 90 |

**b. Materials.** The following materials are required to rig this load:

**(1)** Sling set (40,000-pound capacity).

**(2)** Tape, adhesive, pressure-sensitive, 2-inch wide roll.

**(3)** Cord, nylon, Type III, 550-pound breaking strength.

**(4)** Webbing, cotton, 1/4-inch, 80-pound breaking strength.

**c. Personnel.** Two persons can prepare and rig this load in 30 minutes.

**d. Procedures.** The following procedures apply to this load:

**(1) Preparation.** Prepare the load using the following steps:

**(a)** Disengage the Mkl6 from the Mk48 prime mover according to the operator's manual.

**(b)** Secure all hoses with tape or nylon cord.

**(c)** Tape all lights, reflectors, and glass fixtures.

**(d)** Make sure all tool compartment doors are secured shut.

**(2) Rigging.** Rig the load according to the steps in Figure 3-10.

**(3) Hookup.** The hookup team stands on top of the fifth-wheel adapter. The static wand person discharges the static electricity with the static wand. The hookup person places the apex fitting onto the aircraft cargo hook. The hookup team then carefully dismounts the vehicle and remains close to the load as the helicopter removes slack from the sling legs. When successful hookup is assured, the hookup team quickly exits the area underneath the helicopter to the designated rendezvous point.

**(4) Derigging.** Derigging is the reverse of the preparation and rigging procedures in steps d (1) and d (2).

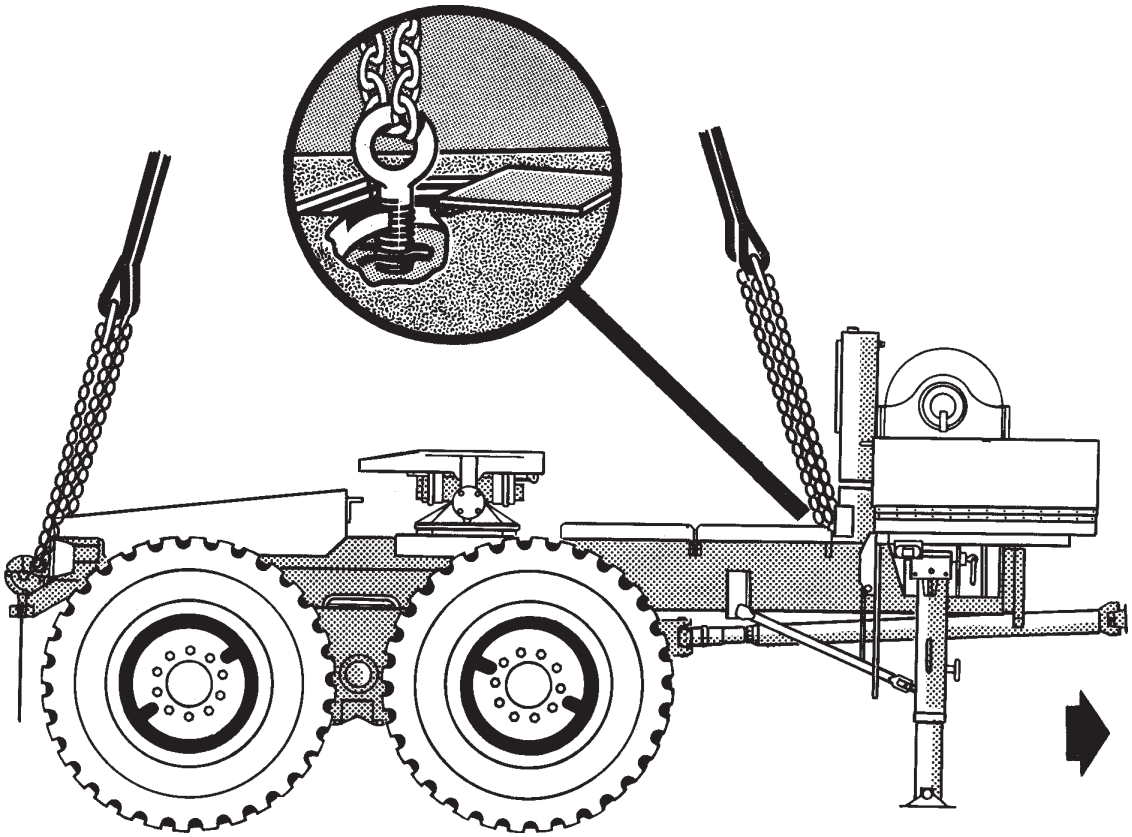

**RIGGING STEPS**

**1.** Position apex fitting on top of the fifth-wheel. Route outer sling legs 1and 2 to the front of the trailer and inner sling legs 3 and 4 to the rear. Sling legs 1 and 3 must be on the left side of the load.

**2.** Loop the chain end of sling leg 1 through the left front lift provision located on the main frame below the winch and behind the left front stowage compartment. Place the correct link from Table 3-10 in the grab hook. Repeat with sling leg 2 through the right front lift provision.

**3.** Route the chain end of sling leg 3 through the left rear lift provision located on the left side of the towing pintle. Place the correct link from Table 3-10 in the grab hook. Repeat with sling leg 4 through the right rear lift provision.

**4.** Cluster and tie or tape (breakaway technique) all sling legs together on top of the trailer to prevent entanglement during hookup and lift-off.

*Figure 3-10. Mk16, Trailer, Fifth-Wheel Adapter*

## 3-12. Mk17, Trailer, Drop-side, Cargo

**a. Applicability.** The following item in Table 3-11 is certified for all helicopters with suitable lift capacity by the US Army Natick Research, Development, and Engineering Center:

**Table 3-11. Mk17, Trailer, Drop-side, Cargo**

| NOMENCLATURE | MAX WEIGHT (POUNDS) | SLING SET | LINK COUNT FRONT/REAR | RECOMMENDED AIRSPEED (KNOTS) |
|---|---|---|---|---|
| Mk17, Trailer, Drop-side, Cargo | 23,000 | 40K | 3/13 | 75 |

**b. Materials.** The following materials are required to rig this load:

**(1)** Sling set (40,000-pound capacity).

**(2)** Tape, adhesive, pressure-sensitive, 2-inch wide roll.

**(3)** Cord, nylon, Type III, 550-pound breaking strength.

**(4)** Webbing, cotton, 1/4-inch, 80-pound breaking strength.

**c. Personnel.** Two persons can prepare and rig this load in 20 minutes.

**d. Procedures.** The following procedures apply to this load:

**(1) Preparation.** Prepare the load using the following steps:

**(a)** Disengage the Mkl7 from the Mk48 prime mover according to the operator's manual.

**(b)** Secure all hoses with tape or nylon cord.

**(c)** Tape all lights, reflectors, and glass fixtures.

**(d)** Remove the safety retainer pins from the lifting eyelets located under the doors in the bed of the trailer. Unscrew the lifting eyelets from their stored position and reinsert the lifting eyelets so that the eyelet portion is accessible from the bed of the trailer through the access doors. Screw the lifting eyelets all the way in and back out one full turn. Reinsert the safety retainer pins to prevent the lifting eyelets from backing out in flight.

**(e)** Make sure all tool compartment doors are secured shut.

**(2) Rigging.** Rig the load according to the steps in Figure 3-11.

**(3) Hookup.** The hookup team stands on top of the trailer. The static wand person discharges the static electricity with the static wand. The hookup person places the apex fitting onto the aircraft cargo hook. The hookup team then carefully dismounts the vehicle and remains close to the load as the helicopter removes slack from the sling legs. When successful hookup is assured, the hookup team quickly exits the area underneath the helicopter to the designated rendezvous point.

**(4) Derigging.** Derigging is the reverse of the preparation and rigging procedures in steps d (1) and d (2).

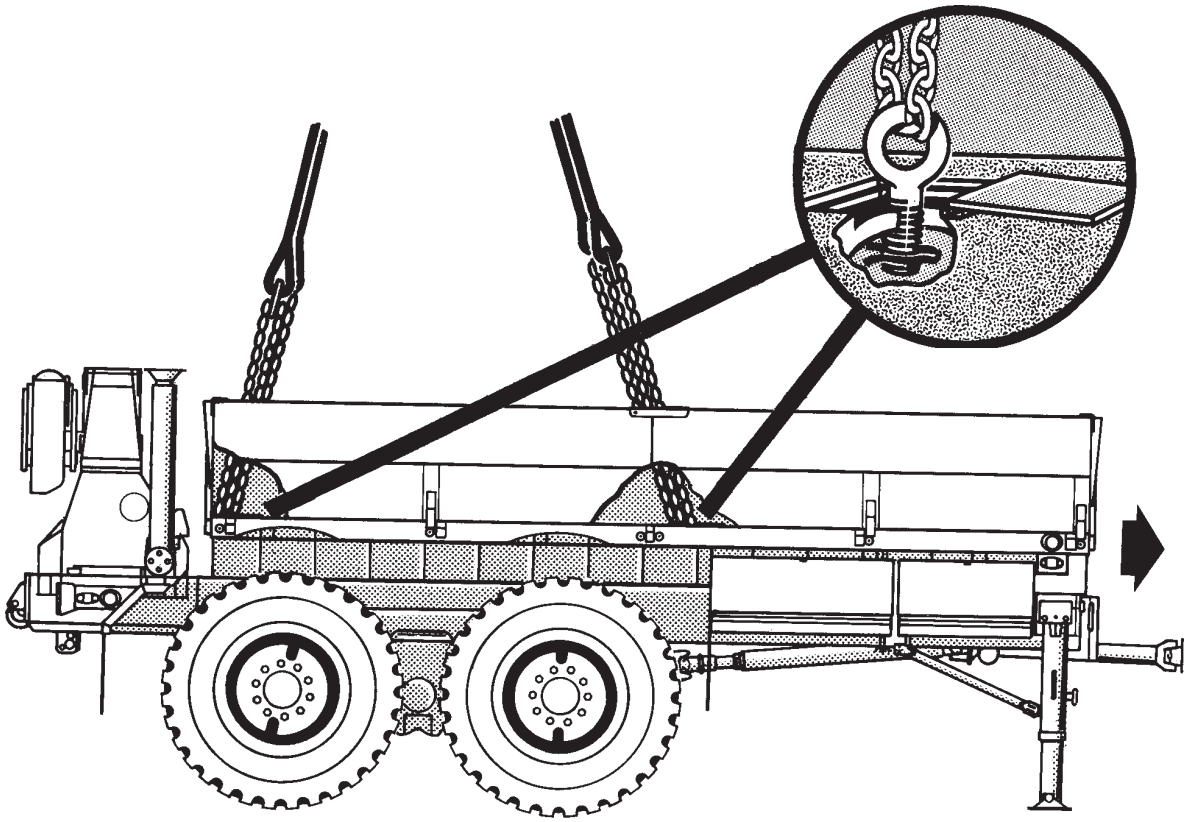

**RIGGING STEPS**

**1.** Position apex fitting on top of the trailer. Route outer sling legs 1and 2 to the front of the trailer and inner sling legs 3 and 4 to the rear. Sling legs 1 and 3 must be on the left side of the load.

**2.** Loop the chain end of sling leg 1 through the left front lift provision located in the middle of the left side of the trailer bed. Place the correct link from Table 3-11 in the grab hook. Repeat with sling leg 2 through the right front lift provision.

**3.** Route the chain end of sling leg 3 through the left rear lift provision located in the left rear corner of the trailer bed by the towing pintle hook. Place the correct link from Table 3-11 in the grab hook. Repeat with sling leg 4 through the right rear lift provision.

**4.** Cluster and tie or tape (breakaway technique) all sling legs together on top of the trailer to prevent entanglement during hookup and lift-off.

***Figure 3-11. Mk17, Trailer, Drop-side, Cargo***

## 3-13. M116A2 Trailer with Antenna Groups, AS-3954/TRC (2 each) (USMC)

**a. Applicability.** The following item in Table 3-12 is certified for all helicopters with suitable lift capacity by the US Army Natick Research, Development, and Engineering Center:

**Table 3-12. M116A2 Trailer with Antenna Groups, AS-3954/TRC (2 each)**

| NOMENCLATURE | MAX WEIGHT (POUNDS) | SLING SET | LINK COUNT FRONT/REAR | RECOMMENDED AIRSPEED (KNOTS) |
|---|---|---|---|---|
| M116A2 Trailer with Antenna Groups, AS-3954/TRC (2 each) | 3,230 | 15K | 3/3 | 65 |

**b. Materials.** The following materials are required to rig this load:

**(1)** Multileg sling set (15,000-pound capacity).

**(2)** Tape, adhesive, pressure-sensitive, 2-inch wide roll.

**(3)** Cord, nylon, Type III, 550-pound breaking strength.

**(4)** Webbing, cotton, 1/4-inch, 80-pound breaking strength.

**(5)** Tie-down strap, cargo, CGU-1/B.

**c. Personnel.** Two persons can prepare and rig this load in 10 minutes.

**d. Procedures.** The following procedures apply to this load:

**(1) Preparation.** Prepare the load using the following steps:

**(a)** Secure all loose items inside the trailer with tape or Type III nylon cord.

**(b)** Secure all covers in their proper place. Do not remove the tarps. The tarps protect the antennae.

**(c)** Secure all chains, hoses, and cables with Type III nylon cord.

**(d)** Engage both trailer parking brakes and ensure the front support leg is down.

**(2) Rigging.** Rig the load according to the steps in Figure 3-12.

**(3) Hookup.** The hookup team stands on top of the trailer. The static wand person discharges the static electricity with the static wand. The hookup person places the apex fitting onto the aircraft cargo hook. The hookup team then carefully dismounts the vehicle and remains close to the load as the helicopter removes slack from the sling legs. When successful hookup is assured, the hookup team quickly exits the area underneath the helicopter to the designated rendezvous point.

**(4) Derigging.** Derigging is the reverse of the preparation and rigging procedures in steps d (1) and d (2).

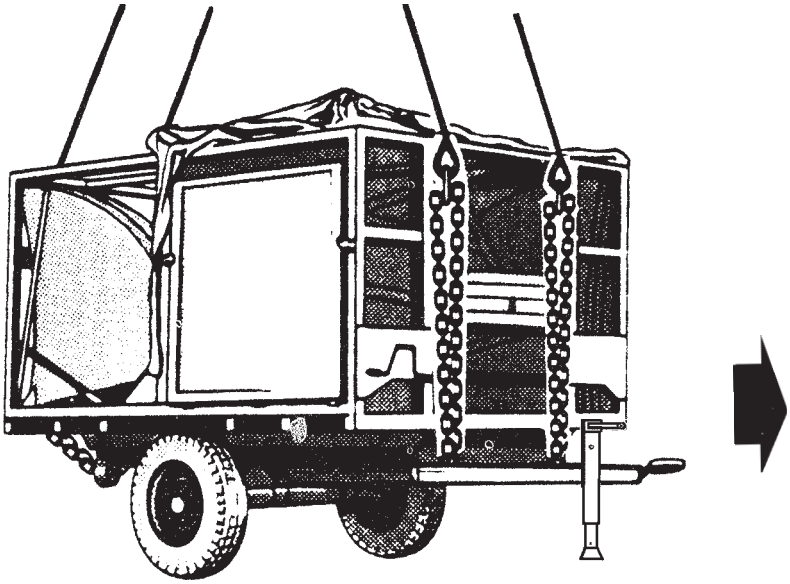

**RIGGING STEPS**

**1.** Position apex fitting on top of the trailer. Route outer sling legs 1and 2 to the front of the trailer (lunette end) and inner sling legs 3 and 4 to the rear. Sling legs 1 and 3 must be on the left side of the load.

**2.** Loop the chain end of sling leg 1 through the left front lift provision located on the aluminum frame attached to the trailer. Do not use the trailer lifting provisions attached to the chassis. Place the correct link from Table 3-12 in the grab hook. Repeat with sling leg 2 through the right front lift provision.

**3.** Route the chain end of sling leg 3 through the left rear lift provision located on the aluminum frame attached to the trailer. Do not use the trailer lifting provisions attached to the chassis. Place the correct link from Table 3-12 in the grab hook. Repeat with sling leg 4 through the right rear lift provision.

**4.** Cluster and tie or tape (breakaway technique) all sling legs together on top of the trailer to prevent entanglement during hookup and lift-off.

***Figure 3-12. M116A2 Trailer with Antenna Groups, AS-3954/TRC (2 each)***

## 3-14. M116A2 Trailer with AN/TPQ-36 Firefinder Antenna Transceiver Group (ATG)

**a. Applicability.** The following item in Table 3-13 is certified for all helicopters with suitable lift capacity by the US Army Natick Research, Development, and Engineering Center:

**Table 3-13. M116A2 Trailer with AN/TPQ-36 Firefinder Antenna Transceiver Group (ATG)**

| NOMENCLATURE | MAX WEIGHT (POUNDS) | SLING SET | LINK COUNT FRONT/REAR | RECOMMENDED AIRSPEED (KNOTS) |
|---|---|---|---|---|
| AN/TPQ-36 Firefinder Antenna Transceiver Group | 3,320 | 10K | 3/25 | 105 |

**b. Materials.** The following materials are required to rig this load:

**(1)** Sling set (10,000-pound capacity).

**(2)** Chain length, part number 38850-00053-101, from a 10,000-pound capacity sling set (4 each).

**(3)** Coupling link, part number 577-0615, from a 10,000-pound sling set (4 each).

**(4)** Tape, adhesive, pressure-sensitive, 2-inch wide roll.

**(5)** Cord, nylon, Type III, 550-pound breaking strength.

**(6)** Webbing, cotton, 1/4-inch, 80-pound breaking strength.

**(7)** Felt sheet, cattle hair, Type IV, 1/2-inch or suitable padding.

**(8)** Padding, Cellulose.

**c. Personnel.** Two persons can prepare and rig this load in 20 minutes.

**d. Procedures.** The following procedures apply to this load:

**(1) Preparation.** Prepare the load using the following steps:

**(a)** Connect one additional chain length to each chain of the sling set with the coupling link.

**(b)** Engage the trailer parking brake.

**(c)** Secure the doors closed with Type III nylon cord.

**(d)** Place the radar set in the travel mode and secure the antenna cover to the antenna with tape.

**(2) Rigging.** Rig the load according to the steps in Figure 3-13.

**(3) Hookup.** The hookup team stands on top of the ATG trailer frame. The static wand person discharges the static electricity with the static wand. The hookup person places the apex fitting onto the aircraft cargo hook. The hookup team then carefully dismounts the ATG and remains close to the load as the helicopter removes slack from the sling legs. When successful hookup is assured, the hookup team quickly exits the area underneath the helicopter to the designated rendezvous point.

**NOTES:**
**1. Do not stand on the radar panel during hookup.**
**2. Due to limited clearance between the helicopter and the top of the ATG, the hookup team may want to use an extended sling system on this load and hook this load from the ground or the bed of a truck. Polyester round slings are recommended for use as vertical pendants. The extended sling legs may not be ideal for flying this load "nap of the earth" in a tactical environment.**
**3. Hookup of this load presents substantial risk of damage to the load or injury to the hookup personnel. Use of a reach pendant is recommended for this load.**

**(4) Derigging.** Derigging is the reverse of the preparation and rigging procedures in steps d (1) and d (2).

**NOTE: When releasing the apex fitting after setting the load down, the helicopter pilot should hover to the side to prevent damaging the radar panel.**

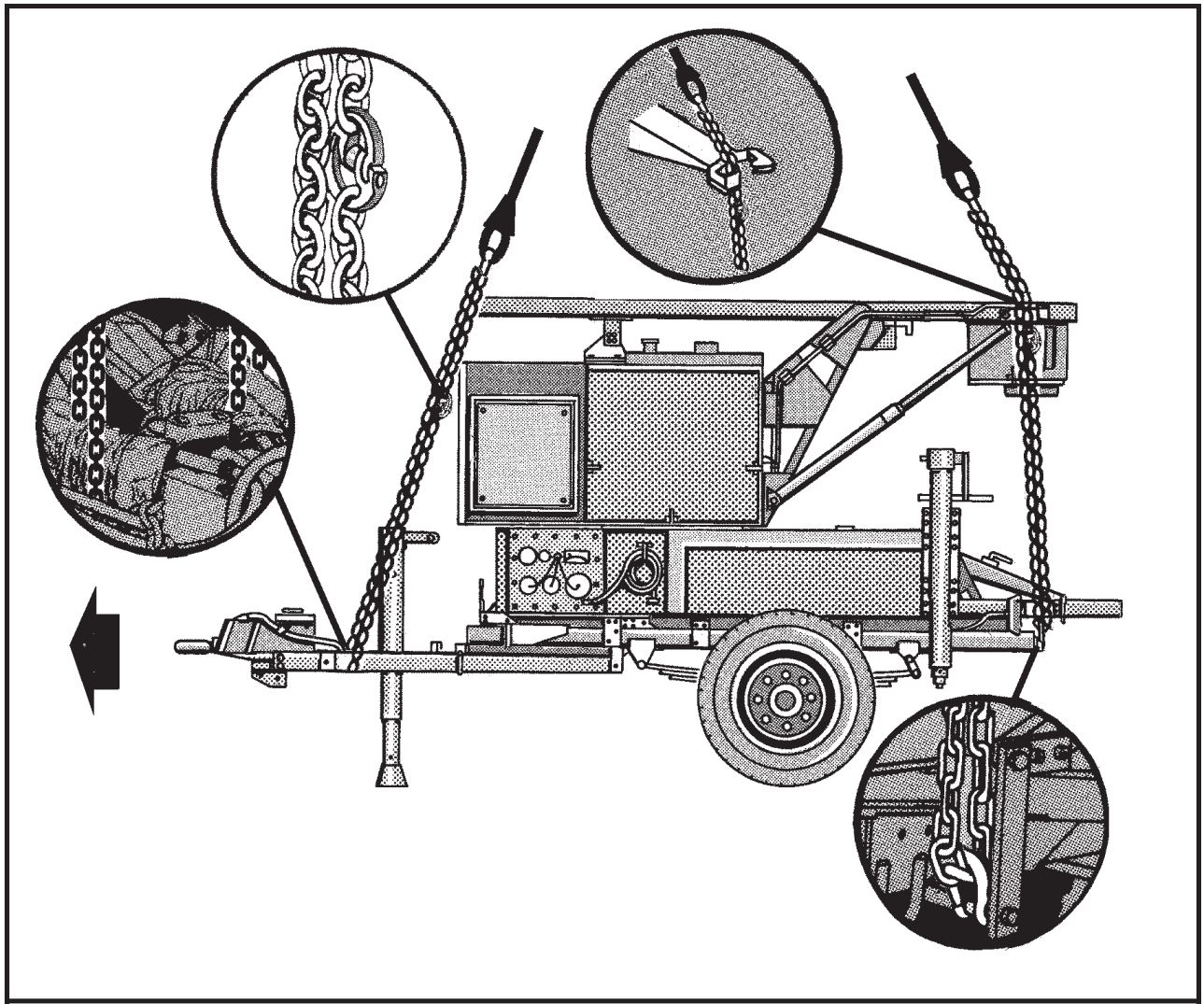

**RIGGING STEPS**

**1.** Position apex fitting on top of the trailer (but not on top of the radar panel). Route outer sling legs 1and 2 to the front of the trailer (lunette end) and inner sling legs 3 and 4 to the rear. Sling legs 1 and 3 must be on the left side of the load.

**2.** Loop the chain end of sling leg 1 under the trailer A-frame just aft of the lunette and through the keeper from left to right on the left side of the drawbar. Place the correct link from Table 3-13 in the grab hook. Repeat with sling leg 2 on the right side of the drawbar.

**3.** Route the chain end of sling leg 3 through the left rear lift provision located on the rear of the trailer. Place the correct link from Table 3-13 in the grab hook. Repeat with sling leg 4 through the right rear lift provision. Secure the excess chain with Type III nylon cord.

**4.** Cluster and tie or tape (breakaway technique) all sling legs together on top of the trailer to prevent entanglement during hookup and lift-off.

***Figure 3-13. M116A2 Trailer with AN/TPQ-36 Firefinder Antenna Transceiver Group (ATG)***

## 3-15. M116A2 Trailer with M894 18,000-BTU Air Conditioner and MEP-003A Generator

**a. Applicability.** The following item in Table 3-14 is certified for all helicopters with suitable lift capacity by the US Army Natick Research, Development, and Engineering Center:

**Table 3-14. M116A2 Trailer with M894 18,000-BTU Air Conditioner and MEP-003A Generator**

| NOMENCLATURE | MAX WEIGHT (POUNDS) | SLING SET | LINK COUNT FRONT/REAR | RECOMMENDED AIRSPEED (KNOTS) |
|---|---|---|---|---|
| M116A2 Trailer with M894 18,000-BTU Air Conditioner and MEP-003A Generator | 2,620 | 10K | 3/3 | 80 |

**b. Materials.** The following materials are required to rig this load:

**(1)** Sling set (10,000-pound capacity).

**(2)** Tape, adhesive, pressure-sensitive, 2-inch wide roll.

**(3)** Cord, nylon, Type III, 550-pound breaking strength.

**(4)** Webbing, cotton, 1/4-inch, 80-pound breaking strength.

**(5)** Felt sheet, cattle hair, Type IV, 1/2-inch or suitable substitute.

**c. Personnel.** Two persons can prepare and rig this load in 15 minutes.

**d. Procedures.** The following procedures apply to this load:

**(1) Preparation.** Prepare the load using the following steps:

**(a)** Secure all lids, doors, and caps with tape or Type III nylon cord.

**(b)** Secure all chains, hoses, and cables with Type III nylon cord.

**(c)** Engage both trailer parking brakes and ensure the front support leg is down.

**(2) Rigging.** Rig the load according to the steps in Figure 3-14.

**(3) Hookup.** The hookup team stands on top of the trailer. The static wand person discharges the static electricity with the static wand. The hookup person places the apex fitting onto the aircraft cargo hook. The hookup team then carefully dismounts the vehicle and remains close to the load as the helicopter removes slack from the sling legs. When successful hookup is assured, the hookup team quickly exits the area underneath the helicopter to the designated rendezvous point.

**(4) Derigging.** Derigging is the reverse of the preparation and rigging procedures in steps d (1) and d (2).

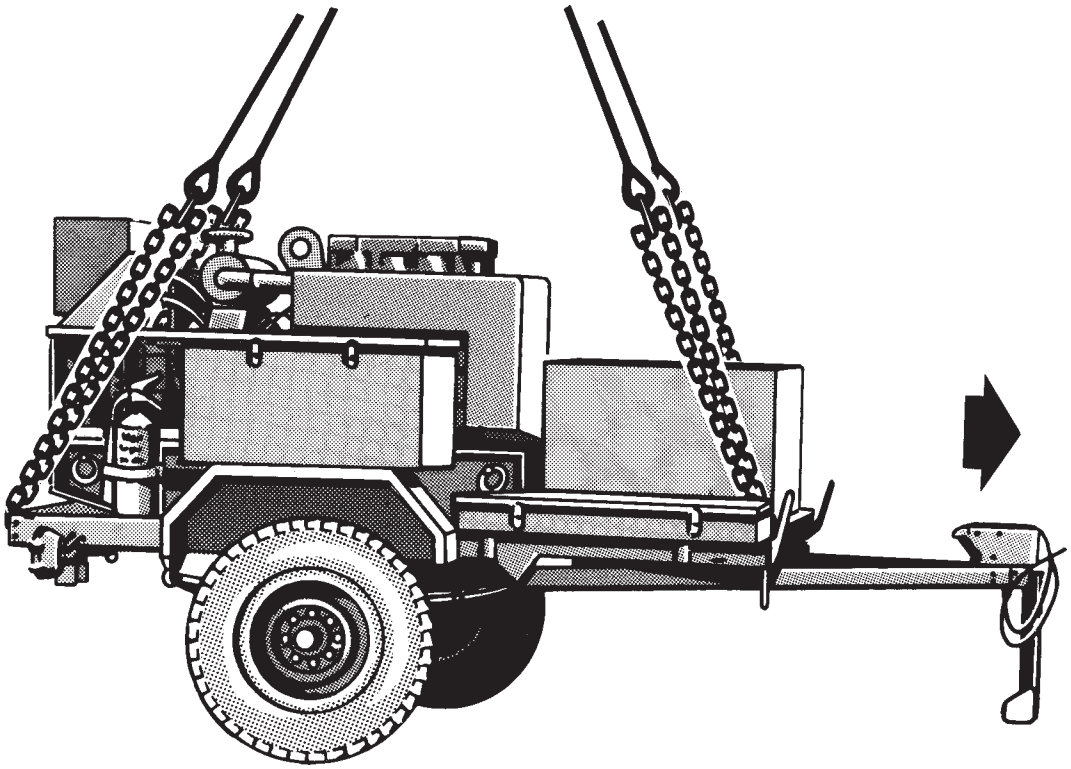

**RIGGING STEPS**

**1.** Position apex fitting on top of the generator. Route outer sling legs 1and 2 to the front of the trailer (lunette end) and inner sling legs 3 and 4 to the rear. Sling legs 1 and 3 must be on the left side of the load.

**2.** Loop the chain end of sling leg 1 through the left front lift provision located on the front of the trailer just outside the A-frame. Place the correct link from Table 3-14 in the grab hook. Repeat with sling leg 2 through the right front lift provision.

**3.** Route the chain end of sling leg 3 through the left rear lift provision located on the rear of the trailer frame. Place the correct link from Table 3-14 in the grab hook. Repeat with sling leg 4 through the right rear lift provision.

**4.** Cluster and tie or tape (breakaway technique) all sling legs together on top of the trailer to prevent entanglement during hookup and lift-off.

***Figure 3-14. M116A2 Trailer with M894 18,000-BTU Air Conditioner and MEP-003A Generator***

## 3-16. MKT-90 Field Kitchen Trailer

**a. Applicability.** The following item in Table 3-15 is certified for all helicopters with suitable lift capacity by the US Army Natick Research, Development, and Engineering Center:

**Table 3-15. MKT-90 Field Kitchen Trailer**

| NOMENCLATURE | MAX WEIGHT (POUNDS) | SLING SET | LINK COUNT FRONT/REAR | RECOMMENDED AIRSPEED (KNOTS) |
|---|---|---|---|---|
| MKT-90 Field Kitchen Trailer | 5,730 | 10K | 3/11 | 70 |

**NOTE: Only MKT-90 versions equipped with internal spreader bars (PIP No. 1-85-08-2802) may be sling loaded. The data plate next to the item data plate must contain an etched helicopter.**

**b. Materials.** The following materials are required to rig this load:

**(1)** Sling set (10,000-pound capacity).

**(a)** Chain length, part number 38850-00053-101, from a 10,000-pound capacity sling set (4 each).

**(b)** Coupling link, part number 577-0615, from a 10,000-pound sling set (4 each).

**(2)** Tape, adhesive, pressure-sensitive, 2-inch wide roll.

**(3)** Cord, nylon, Type III, 550-pound breaking strength.

**(4)** Webbing, cotton, 1/4-inch, 80-pound breaking strength.

**(5)** Felt sheet, cattle hair, Type IV, 1/2-inch or suitable substitute.

**c. Personnel.** Two persons can prepare and rig this load in 20 minutes.

**d. Procedures.** The following procedures apply to this load:

**(1) Preparation.** Prepare the load using the following steps:

**(a)** Secure all items in their proper storage location before closing the unit.

**(b)** Configure the MKT for ground transportation according to the operator's instructions.

**(c)** Retract and stow all landing legs. Secure each landing leg with Type III nylon cord.

**(d)** Lower the lunette as far as possible by adjusting the landing wheel hand screw. Do not retract the landing wheel.

**(e)** Secure all chains, hoses, and cables with Type III nylon cord to the trailer drawbar.

**(f)** Engage both trailer parking brakes and ensure the front support leg is down.

**(g)** Secure all loose canvas with tape.

**(h)** Extend the sling leg chains by connecting one additional chain length to each chain on a 10,000-pound capacity sling set with coupling links.

**(2) Rigging.** Rig the load according to the steps in Figure 3-15.

**(3) Hookup.** The hookup team stands on top of the trailer forward of the trailer axle. The static wand person discharges the static electricity with the static wand. The hookup person places the apex fitting onto the aircraft cargo hook. The hookup team then carefully dismounts the vehicle and remains close to the load as the helicopter removes slack from the sling legs. When successful hookup is assured, the hookup team quickly exits the area underneath the helicopter to the designated rendezvous point.

**(4) Derigging.** Derigging is the reverse of the preparation and rigging procedures in steps d (1) and d (2).

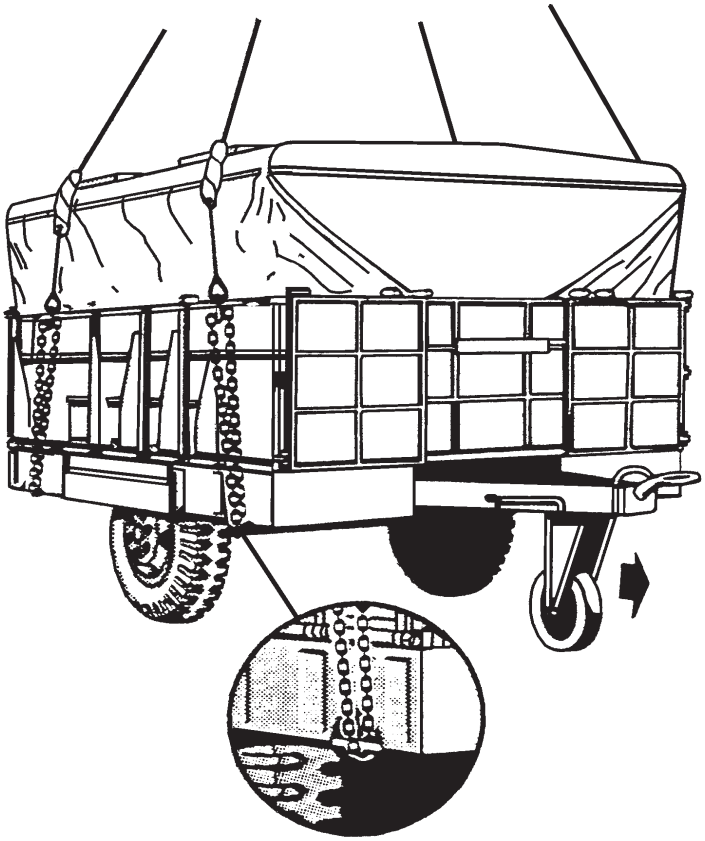

**RIGGING STEPS**

**CAUTION**

**While on the roof of the trailer, stay in front of the trailer axle. Moving behind the axle may cause the trailer to tip rearwards, causing possible injury to personnel and damage to the load.**

**1.** Position apex fitting on top of the trailer roof. Route outer sling legs 1and 2 to the front of the trailer (lunette end) and inner sling legs 3 and 4 to the rear. Sling legs 1 and 3 must be on the left side of the load.

**2.** Loop the chain end of sling leg 1 through the left front lift provision located in the trailer frame. Place the correct link from Table 3-15 in the grab hook. Repeat with sling leg 2 through the right front lift provision. The lift provisions are in the form of cutouts in the frame.

**3.** Route the chain end of sling leg 3 through the left rear lift provision located on the rear of the trailer frame. Place the correct link from Table 3-15 in the grab hook. Repeat with sling leg 4 through the right rear lift provision. Secure the excess chain with Type III nylon cord.

**4.** Pull sling legs 1 and 2 up on the roof. Tie (breakaway technique) the grabhooks together to keep them from sliding off the roof. Repeat with sling legs 3 and 4.

**5.** Pad each sling leg where it contacts the edge of the roof. Secure the padding with tape or Type III nylon cord.

**6.** Cluster and tie or tape (breakaway technique) all sling legs together on top of the trailer to prevent entanglement during hookup and lift-off.

*Figure 3-15. MKT-90 Field Kitchen Trailer*

## 3-17. Hydraulic System Test and Repair Unit (HSTRU)

**a. Applicability.** The following item in Table 3-16 is certified for all helicopters with suitable lift capacity by the US Army Natick Research, Development, and Engineering Center:

**Table 3-16. Hydraulic System Test and Repair Unit (HSTRU)**

| NOMENCLATURE | MAX WEIGHT (POUNDS) | SLING SET | LINK COUNT FRONT/REAR | RECOMMENDED AIRSPEED (KNOTS) |
|---|---|---|---|---|
| Hydraulic System Test and Repair Unit (HSTRU) | 2,878 | 10K | 16/3 | 70 |

**b. Materials.** The following materials are required to rig this load:

**(1)** Sling set (10,000-pound capacity).

**(2)** Tape, adhesive, pressure-sensitive, 2-inch wide roll.

**(3)** Cord, nylon, Type III, 550-pound breaking strength.

**(4)** Webbing, cotton, 1/4-inch, 80-pound breaking strength.

**c. Personnel.** Two persons can prepare and rig this load in 15 minutes.

**d. Procedures.** The following procedures apply to this load:

**(1) Preparation.** Prepare the load using the following steps:

**(a)** Safety tie the covers in the down position with Type III nylon cord.

**(b)** Secure all chains, hoses, and cables with Type III nylon cord to the trailer drawbar.

**(c)** Engage both trailer parking brakes and ensure the front support leg is down.

**(2) Rigging.** Rig the load according to the steps in Figure 3-16.

**(3) Hookup.** The hookup team stands on top of the HSTRU. The static wand person discharges the static electricity with the static wand. The hookup person places the apex fitting onto the aircraft cargo hook. The hookup team then carefully dismounts the vehicle and remains close to the load as the helicopter removes slack from the sling legs. When successful hookup is assured, the hookup team quickly exits the area underneath the helicopter to the designated rendezvous point.

**(4) Derigging.** Derigging is the reverse of the preparation and rigging procedures in steps d (1) and d (2).

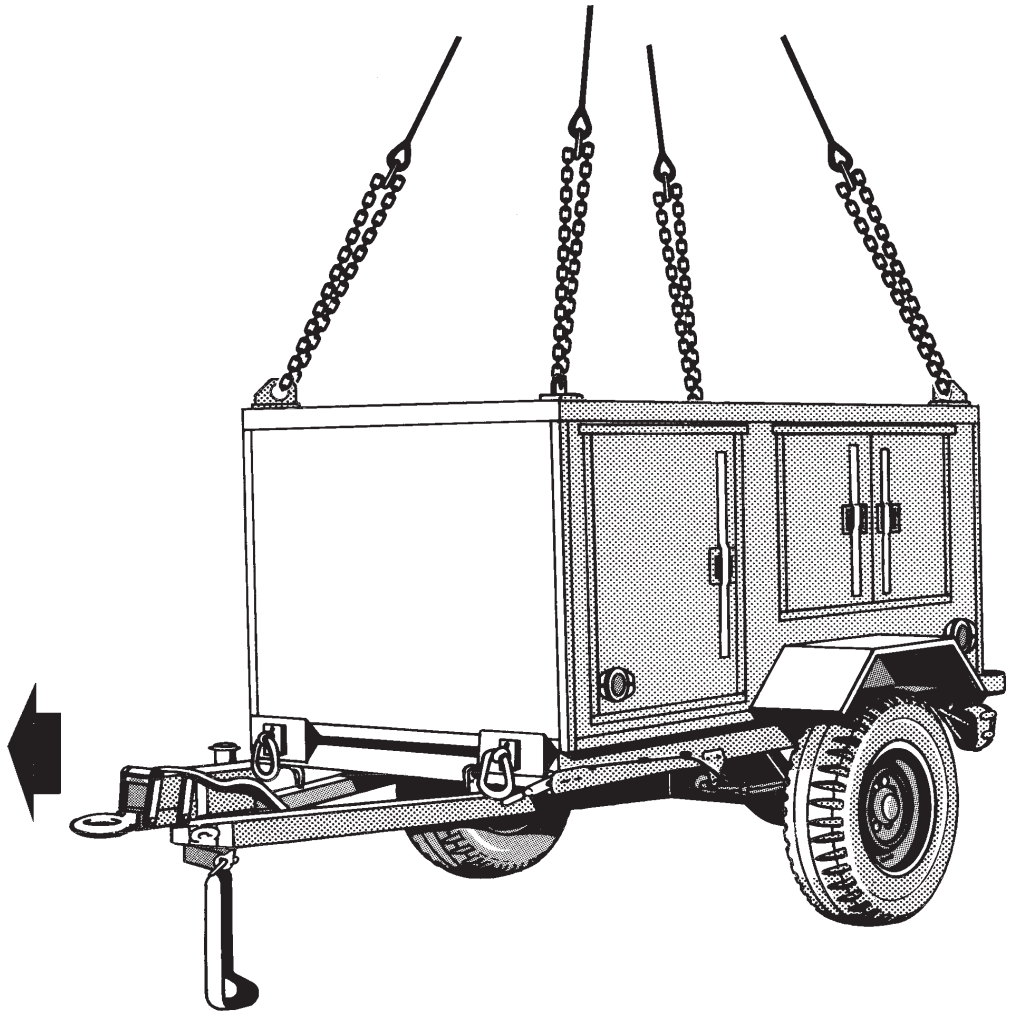

**RIGGING STEPS**

**1.** Position apex fitting on top of the trailer roof. Route outer sling legs 1and 2 to the front of the trailer (lunette end) and inner sling legs 3 and 4 to the rear. Sling legs 1 and 3 must be on the left side of the load.

**2.** Loop the chain end of sling leg 1 through the left front lift provision located on the front of the HSTRU roof. Place the correct link from Table 3-16 in the grab hook. Repeat with sling leg 2 through the right front lift provision. Secure the excess chain with Type III nylon cord.

**3.** Route the chain end of sling leg 3 through the left rear lift provision located on the rear of the HSTRU roof. Place the correct link from Table 3-16 in the grab hook. Repeat with sling leg 4 through the right rear lift provision.

**4.** Cluster and tie or tape (breakaway technique) all sling legs together on top of the roof to prevent entanglement during hookup and lift-off.

*Figure 3-16. Hydraulic System Test and Repair Unit (HSTRU)*

## 3-18. M116A2 Trailer, Single Channel Objective Tactical Terminal (SCOTT)

**a. Applicability.** The following item in Table 3-17 is certified for all helicopters with suitable lift capacity by the US Army Natick Research, Development, and Engineering Center:

**Table 3-17. M116A2 Trailer, Single Channel Objective Tactical Terminal (SCOTT)**

| NOMENCLATURE | MAX WEIGHT (POUNDS) | SLING SET | LINK COUNT FRONT/REAR | RECOMMENDED AIRSPEED (KNOTS) |
|---|---|---|---|---|
| M116A2 Trailer, Single Channel Objective Tactical Terminal (SCOTT) | 2,830 | 10K | 18/3 | 85 |

**b. Materials.** The following materials are required to rig this load:

**(1)** Sling set (10,000-pound capacity).

**(2)** Tape, adhesive, pressure-sensitive, 2-inch wide roll.

**(3)** Cord, nylon, Type III, 550-pound breaking strength.

**(4)** Webbing, cotton, 1/4-inch, 80-pound breaking strength.

**(5)** Felt sheet, cattle hair, Type IV, 1/2-inch or suitable substitute.

**(6)** Tie-down, cargo, CGU-1/B.

**c. Personnel.** Two persons can prepare and rig this load in 15 minutes.

**d. Procedures.** The following procedures apply to this load:

**(1) Preparation.** Prepare the load using the following steps:

**(a)** Secure all cargo in the bed of the trailer with tie-down straps.

**(b)** Remove and secure nylon tarps to upper trailer structure with tape or Type III nylon cord.

**(c)** Secure all chains, hoses, and cables to the drawbar with Type III nylon cord.

**(d)** Engage both hand brakes.

**(2) Rigging.** Rig the load according to the steps in Figure 3-17.

**CAUTION**

**Brief the pilots to hover to the side of the trailer prior to jettisoning the apex fitting during landing operations.**

**(3) Hookup.** The hookup team stands on the trailer chassis. The static wand person discharges the static electricity with the static wand. The hookup person places the apex fitting onto the aircraft cargo hook. The hookup team then carefully dismounts the vehicle and remains close to the load as the helicopter removes slack from the sling legs. When successful hookup is assured, the hookup team quickly exits the area underneath the helicopter to the designated rendezvous point.

**(4) Derigging.** Derigging is the reverse of the preparation and rigging procedures in steps d (1) and d (2).

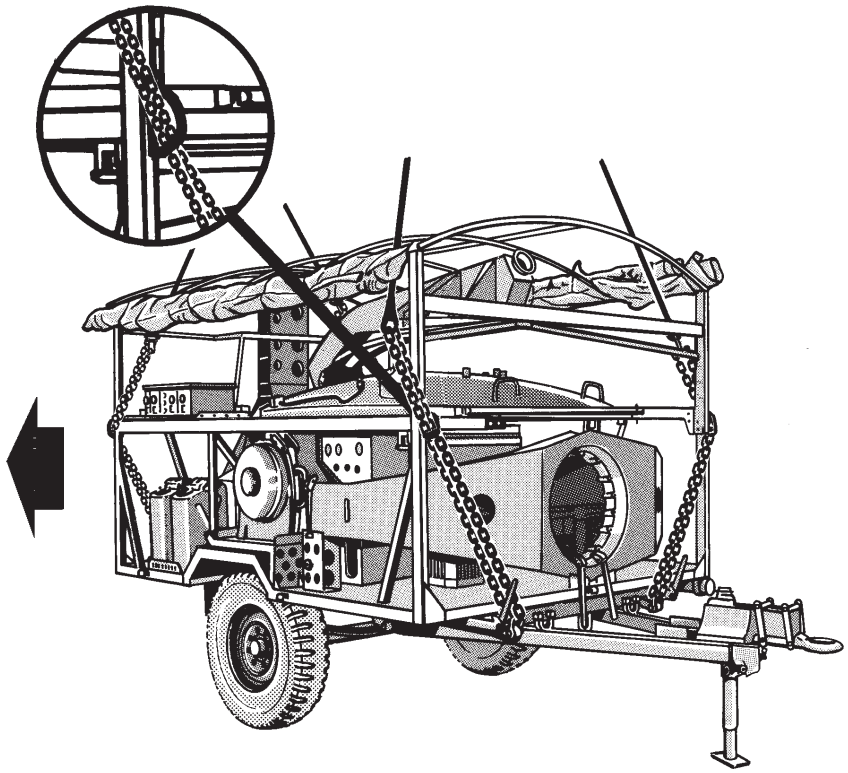

**RIGGING STEPS**

**NOTE: This trailer will fly with the front end (trailer lunette) aft.**

**1.** Position apex fitting on top of the trailer . Route outer sling legs 1and 2 to the front of the trailer (lunette end) and inner sling legs 3 and 4 to the rear. Sling legs 1 and 3 must be on the left side of the load.

**2.** Route sling leg 1 through the trailer canopy structure to the side of the trailer and through the front left sling guide on the horizontal reflector support tube. Repeat with sling leg 2 and the right front sling guide provision.

**3.** Loop the chain end of sling leg 1 through the left front lift provision located on the front of the trailer. Place the correct link from Table 3-17 in the grab hook. Repeat with sling leg 2 through the right front lift provision. Secure the excess chain with Type III nylon cord.

**4.** Route sling leg 3 through the trailer canopy structure to the side of the trailer and through the rear left sling guide on the horizontal reflector support tube. Repeat with sling leg 4 and the right rear sling guide provision.

**5.** Route the chain end of sling leg 3 through the left rear lift provision located on the rear of the trailer. Place the correct link from Table 3-17 in the grab hook. Repeat with sling leg 4 through the right rear lift provision.

**6.** Pad the chain and/or trailer support where there is chain contact.

**7.** Cluster and tie or tape (breakaway technique) all sling legs together on top of the roof to prevent entanglement during hookup and lift-off.

*Figure 3-17. M116A2 Trailer, Single Channel Objective Tactical Terminal (SCOTT)*

## 3-19. High Mobility Trailers (HMT), M1101/M1102

**a. Applicability.** The following items in Table 3-18 are certified for all helicopters with suitable lift capacity by the US Army Soldier Systems Center:

**Table 3-18. High Mobility Trailers**

| NOMENCLATURE | MAX WEIGHT (POUNDS) | SLING SET | LINK COUNT FRONT/REAR | RECOMMENDED AIRSPEED (KNOTS) |
|---|---|---|---|---|
| High Mobility Trailer (Light), M1101 | 3,400 | 10K | 20/3 | 120 |
| High Mobility Trailer (Light), M1102 | 4,200 | 10K | 20/3 | 120 |
| Tactical Messaging System (TMS) Cargo Carrier, M1102 | 4,200 | 10K | 20/3 | 120 |

**b. Materials.** The following materials are required to rig this load:

**(1)** Sling set (10,000-pound capacity).

**(2)** Tape, adhesive, pressure-sensitive, 2-inch wide roll.

**(3)** Cord, nylon, Type III, 550-pound breaking strength.

**(4)** Webbing, cotton, 1/4-inch, 80-pound breaking strength.

**(5)** Felt sheet, cattle hair, Type IV, 1/2-inch or suitable substitute.

**(6)** Tie-down, cargo, CGU-1/B or suitable tie-down lashings.

**c. Personnel.** Two persons can prepare and rig this load in 10 minutes.

**d. Procedures.** The following procedures apply to this load:

**(1) Preparation.** Prepare the load using the following steps:

**(a)** Remove the two rear stabilizer legs from their storage location on the front of the trailer. Place the lower support section in the fully retracted position. Install the stabilizer legs on the rear of the trailer.

**(b)** Install the front jack and lower the lunette as close to the ground as possible.

**(c)** Remove the canvas cover and racks from the trailer. Place these items in the bed of the trailer. Place the accompanying load on top of the canvas cover and secure with the tie-down lashings.

**(d)** Secure the light cable to the top of the drawbar with Type III nylon cord.

**(e)** Engage the parking brake.

**(2) Rigging.** Rig the load according to the steps in Figure 3-18.

**(3) Hookup.** The hookup team stands on the drawbar or in the bed of the trailer (if possible). The static wand person discharges the static electricity with the static wand. The hookup person places the apex fitting onto the aircraft cargo hook. The hookup team then carefully dismounts the trailer and remains close to the load as the helicopter removes slack from the sling legs. When successful hookup is assured, the hookup team quickly exits the area underneath the helicopter to the designated rendezvous point.

**CAUTION**

**The hookup team should dismount the trailer towards the lunette to keep the trailer from tipping towards the rear.**

**(4) Derigging.** Derigging is the reverse of the preparation and rigging procedures in steps d (1) and d (2).

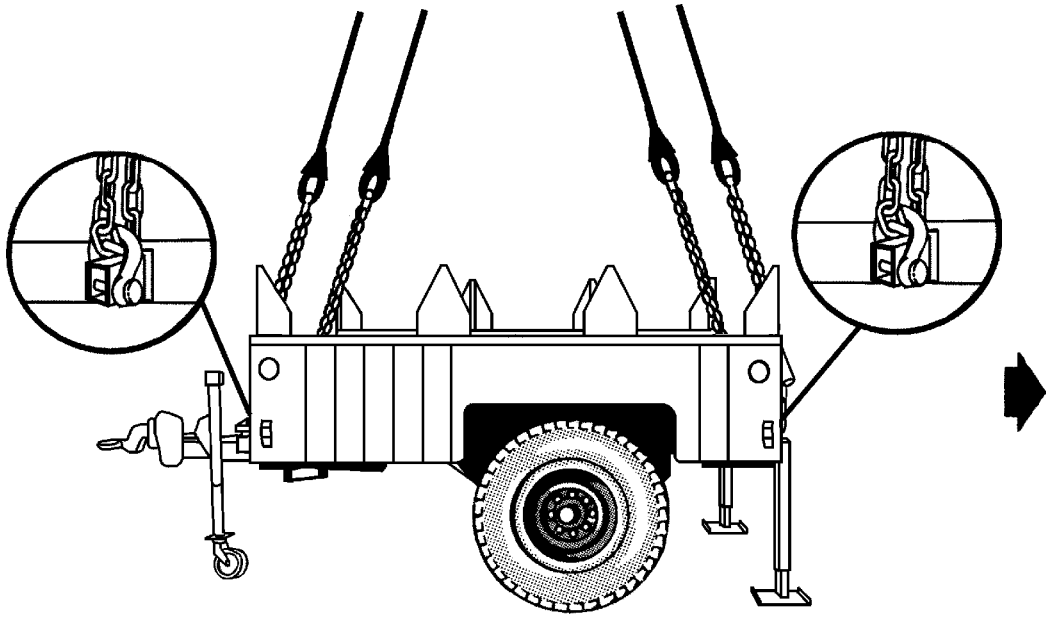

**RIGGING STEPS**

**NOTE: This trailer will fly with the front end (trailer lunette) aft.**

**1.** Position apex fitting on top of the trailer . Route outer sling legs 1and 2 to the front of the trailer (lunette end) and inner sling legs 3 and 4 to the rear. Sling legs 1 and 3 must be on the left side of the load.

**2.** Loop the chain end of sling leg 1 through the left front lift provision located on the front of the trailer. Place the correct link from Table 3-18 in the grab hook. Repeat with sling leg 2 through the right side front lift provision. Secure the excess chain with Type III nylon cord.

**3.** Route the chain end of sling leg 3 through the left rear lift provision located on the rear of the trailer. Place the correct link from Table 3-18 in the grab hook. Repeat with sling leg 4 through the right rear lift provision.

**4.** Pad the chain at and below where the chain contacts the trailer walls.

**5.** Cluster and tie or tape (breakaway technique) all sling legs together on top of the roof to prevent entanglement during hookup and lift-off.

*Figure 3-18. High Mobility Trailers*

## 3-20. M116A3 Trailer with OE334 Antenna Coupler Group

**a. Applicability.** The following items in Table 3-19 are certified for all helicopters with suitable lift capacity by the US Army Natick Research, Development, and Engineering Center:

**Table 3-19. M116A3 Trailer with OE334 Antenna Coupler Group**

| NOMENCLATURE | MAX WEIGHT (POUNDS) | SLING SET | LINK COUNT FRONT/REAR | RECOMMENDED AIRSPEED (KNOTS) |
|---|---|---|---|---|
| High Mobility Downsized (HMD), Direct Air Support Central (DASC), OE334 Antenna Coupler Group | 3,280 | 15K | 3/15 | 80 |

**b. Materials.** The following materials are required to rig this load:

**(1)** Multileg sling set (15,000-pound capacity).

**(2)** Tape, adhesive, pressure-sensitive, 2-inch wide roll.

**(3)** Cord, nylon, Type III, 550-pound breaking strength.

**(4)** Webbing, cotton, 1/4-inch, 80-pound breaking strength.

**(5)** Felt sheet, cattle hair, Type IV, 1/2-inch or suitable substitute.

**c. Personnel.** Two persons can prepare and rig this load in 15 minutes.

**d. Procedures.** The following procedures apply to this load:

**(1) Preparation.** Prepare the load using the following steps:

**(a)** Lower and lock the rear landing leg in place.

**(b)** Lower the front jack on the lunette as close to the ground as possible.

**(c)** Secure the light cable to the top of the drawbar with Type III nylon cord.

**(d)** Engage both parking brakes.

**(2) Rigging.** Rig the load according to the steps in Figure 3-19.

**(3) Hookup.** The hookup team stands next to the trailer. The static wand person discharges the static electricity with the static wand. The hookup person places the apex fitting onto the aircraft cargo hook. The hookup team remains close to the load as the helicopter removes slack from the sling legs. When successful hookup is assured, the hookup team quickly exits the area underneath the helicopter to the designated rendezvous point.

**(4) Derigging.** Derigging is the reverse of the preparation and rigging procedures in steps d (1) and d (2).

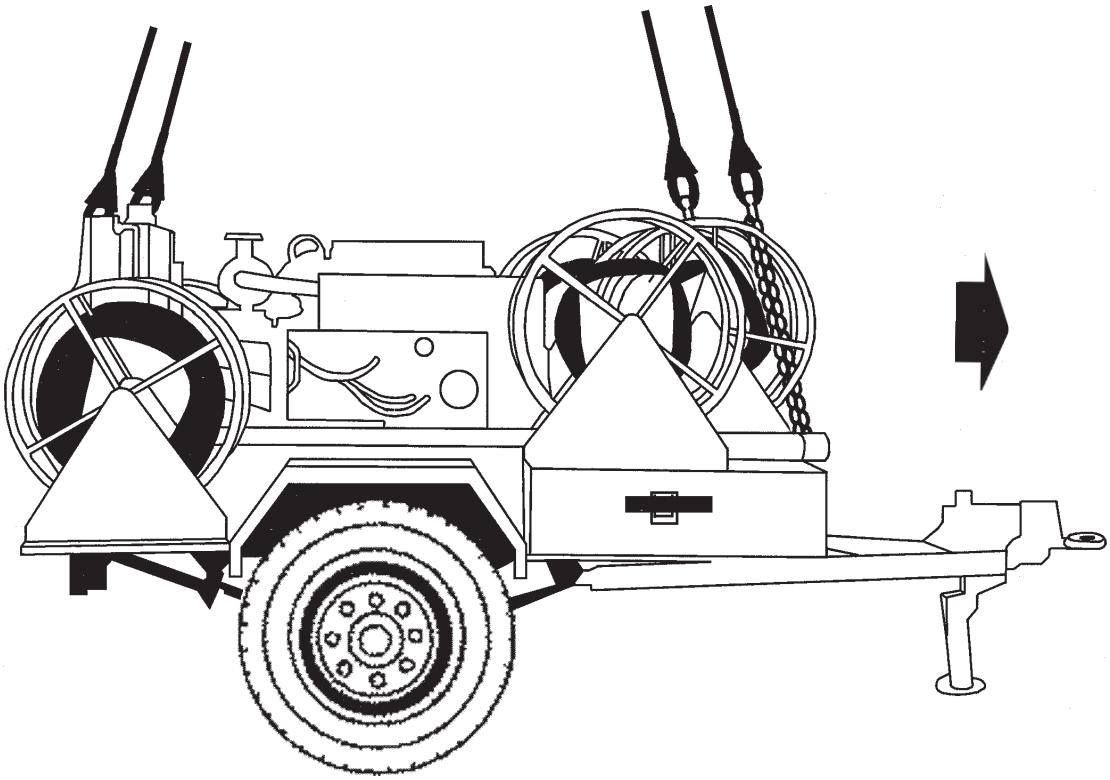

**RIGGING STEPS**

**1.** Position apex fitting on top of the trailer . Route outer sling legs 1and 2 to the front of the trailer (lunette end) and inner sling legs 3 and 4 to the rear. Sling legs 1 and 3 must be on the left side of the load.

**2.** Pass the chain end of sling leg 1 through the right inner cable reel assembly at the front of the trailer. Loop the chain end of sling leg 1 through the left front multipurpose provision located on the front of the trailer. Place the correct link from Table 3-19 in the grab hook. Repeat with sling leg 2 through the right multipurpose provision.

**3.** Route the chain end of sling leg 3 through the left rear multipurpose provision located on the rear of the trailer. Place the correct link from Table 3-19 in the grab hook. Repeat with sling leg 4 through the right rear multipurpose provision. Secure the excess chain with Type III nylon cord.

**4.** Pad the front chains where the chains contact the generator and reels.

**5.** Cluster and tie or tape (breakaway technique) all sling legs together to prevent entanglement during hookup and lift-off.

*Figure 3-19. M116A3 Trailer with OE334 Antenna Coupler Group*

## 3-21. Desert Operation Trailer (DOT) with Desert Operation Motorcycle (DOM)

**a. Applicability.** The following items in Table 3-20 are certified for all helicopters with suitable lift capacity by the US Army Natick Research, Development, and Engineering Center:

**Table 3-20. Desert Operation Trailer (DOT) with Desert Operation Motorcycle (DOM)**

| NOMENCLATURE | MAX WEIGHT (POUNDS) | SLING SET | LINK COUNT FRONT/REAR | RECOMMENDED AIRSPEED (KNOTS) |
|---|---|---|---|---|
| Desert Operation Trailer (DOT) with Desert Operation Motorcycle (DOM) | 3,300 | 10K | 20/3 | 80 |

**b. Materials.** The following materials are required to rig this load:

**(1)** Sling set (10,000-pound capacity).

**(2)** Tape, adhesive, pressure-sensitive, 2-inch wide roll.

**(3)** Cord, nylon, Type III, 550-pound breaking strength.

**(4)** Webbing, cotton, 1/4-inch, 80-pound breaking strength.

**(5)** Felt sheet, cattle hair, Type IV, 1/2-inch or suitable substitute.

**(6)** Tie-down strap, cargo, CGU-1/B (4 each).

**(7)** Canvas to cover the motorcycle.

**c. Personnel.** Two persons can prepare and rig this load in 15 minutes.

**d. Procedures.** The following procedures apply to this load:

**(1) Preparation.** Prepare the load using the following steps:

**(a)** Secure the motorcycle to the trailer using standard mounting methods or using at lease four (4) CGU-1/B tie-down straps.

**(b)** Secure the tailgate in the up position.

**(c)** Secure all chains and hoses with tape or Type III nylon cord.

**(d)** Engage the parking brake and place the front support leg in the down position.

**(d)** Safety the spare tire with Type III nylon cord.

**(e)** Pad the motorcycle handlebars and luggage rack with felt padding.

**(f)** Cover the motorcycle with canvas and secure the canvas with Type III nylon cord.

**(2) Rigging.** Rig the load according to the steps in Figure 3-20.

**(3) Hookup.** The hookup team stands on the trailer fender or in the trailer bed. The static wand person discharges the static electricity with the static wand. The hookup person places the apex fitting onto the aircraft cargo hook. The hookup team remains close to the load as the helicopter removes slack from the sling legs. When successful hookup is assured, the hookup team quickly exits the area underneath the helicopter to the designated rendezvous point.

**(4) Derigging.** Derigging is the reverse of the preparation and rigging procedures in steps d (1) and d (2).

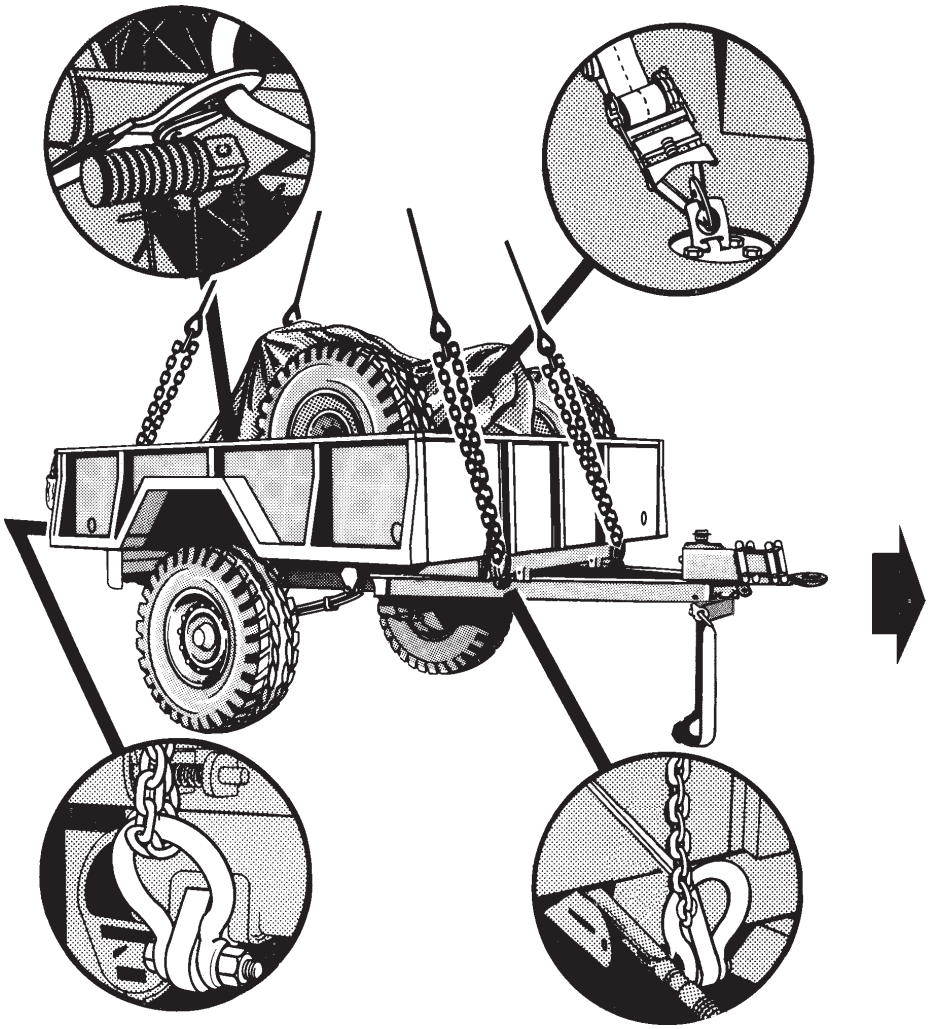

**RIGGING STEPS**

**1.** Position apex fitting on top of the motorcycle . Route outer sling legs 1and 2 to the front of the trailer (lunette end) and inner sling legs 3 and 4 to the rear. Sling legs 1 and 3 must be on the left side of the load.

**2.** Loop the chain end of sling leg 1 through the left front lift provision located on the front of the trailer. Place the correct link from Table 3-20 in the grab hook. Repeat with sling leg 2 through the right front lift provision. Secure the excess chain with Type III nylon cord.

**3.** Route the chain end of sling leg 3 over the tailgate and through the left rear lift provision located on the rear of the trailer. Place the correct link from Table 3-20 in the grab hook. Repeat with sling leg 4 through the right rear lift provision.

**4.** Secure the excess chain taut to the sidewall with tape or Type III nylon cord.

**5.** Cluster and tie or tape (breakaway technique) all sling legs together on top of the motorcycle to prevent entanglement during hookup and lift-off.

*Figure 3-20. Desert Operation Trailer (DOT) with Desert Operation Motorcycle (DOM)*

## 3-22. HMT Trailer With Sentinel AN/MPQ-64 Antenna Transmitter Group (ATG)

**a. Applicability.** The following item in Table 3-21 is certified for all helicopters with suitable lift capacity by the US Army Soldier Systems Center:

**Table 3-21. HMT Trailer With Sentinel AN/MPQ-64 Antenna Transmitter Group (ATG)**

| NOMENCLATURE | MAX WEIGHT (POUNDS) | SLING SET | LINK COUNT FRONT/REAR | RECOMMENDED AIRSPEED (KNOTS) |
|---|---|---|---|---|
| Sentinel AN/MPQ-64 Antenna Transmitter Group (ATG) | 3,900 | 10K | 3/20 | 80 |

**b. Materials.** The following materials are required to rig this load:

**(1)** Sling set (10,000-pound capacity).

**(2)** Tape, adhesive, pressure-sensitive, 2-inch wide roll.

**(3)** Cord, nylon, Type III, 550-pound breaking strength.

**(4)** Webbing, cotton, 1/4-inch, 80-pound breaking strength.

**(5)** Plywood, 3/4-inch x 48-inches x 72-inches.

**(6)** Reach pendant, 11K or 25K.

**c. Personnel.** Two persons can prepare and rig this load in 15 minutes.

**d. Procedures.** The following procedures apply to this load:

**(1) Preparation.** Prepare the load using the following steps:

**(a)** Partially retract all landing legs. Secure in position and tie with Type III nylon cord.

**(b)** Engage the hand brakes.

**(c)** Tape or tie the light cable and brake hose to the top of the drawbar.

**(d)** Secure all loose equipment, lids, and caps with tape or Type III nylon cord.

**(e)** Cut pieces of plywood to cover the antenna boxes on top of the ATG. Drill holes in the plywood where necessary to secure the plywood with Type III nylon cord. Ensure the plywood is adequately secured.

**(f)** Pad the slings where they make contact with the load.

**(2) Rigging.** Rig the load according to the steps in Figure 3-21.

**(3) Hookup.** The hookup team stands on the wheel well of the trailer. The static wand person discharges the static electricity with the static wand. The hookup person places the apex fitting onto the aircraft cargo hook. The hookup team then carefully dismounts the vehicle and remains close to the load as the helicopter removes slack from the sling legs. When successful hookup is assured, the hookup team quickly exits the area underneath the helicopter to the designated rendezvous point.

**CAUTION**
**Advise the air crew to hover to the side of the load before releasing the apex to prevent damaging the load.**

**(4) Derigging.** Derigging is the reverse of the preparation and rigging procedures in steps d (1) and d (2).

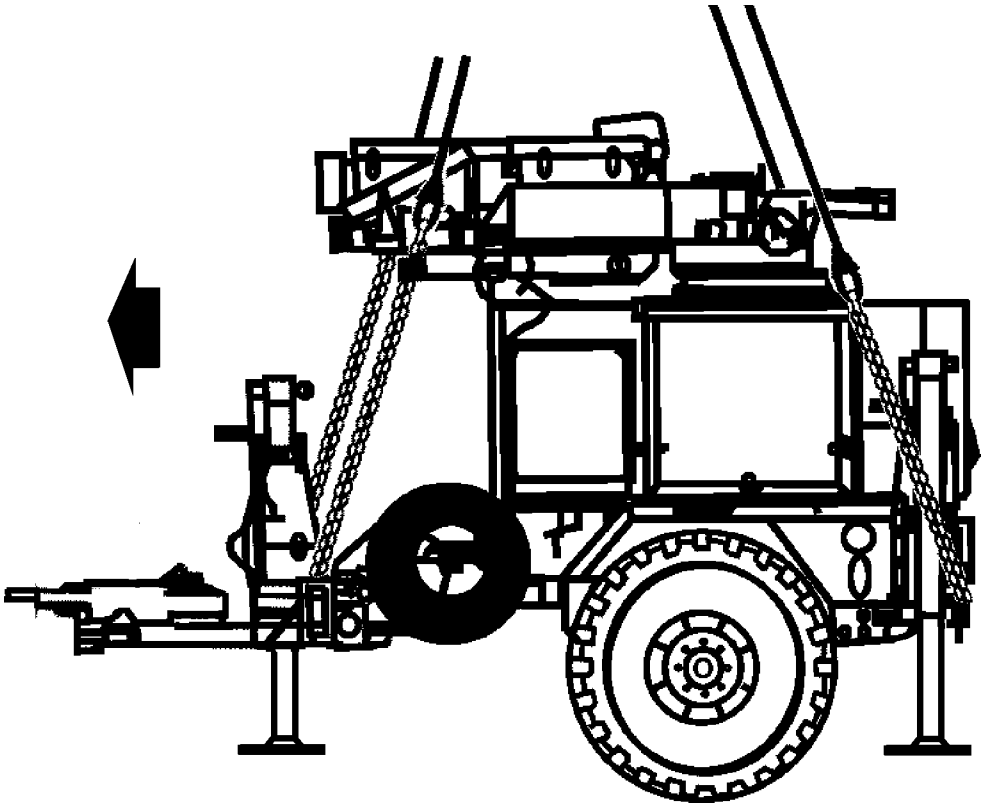

**RIGGING STEPS**

**1.** Attach a reach pendant to the apex fitting. Position the reach pendant and apex fitting on top of the ATG. Route outer sling legs 1and 2 to the front of the trailer and inner sling legs 3 and 4 to the rear. Sling legs 1 and 3 must be on the left side of the load.

**2.** Loop the chain end of sling leg 1 through the left front lift provision located on the front of the trailer. Place the correct link from Table 3-21 in the grab hook. Repeat with sling leg 2 through the right front lift provision.

**3.** Cluster and tie or tape (breakaway technique) sling legs 1 and 2 together at 3-foot intervals to prevent entanglement during hookup and lift-off.

**4.** Route the chain end of sling leg 3 through the left rear lift provision. Place the correct link from Table 3-21in the grab hook. Repeat with sling leg 4 through the right rear lift provision. Secure excess chain with tape or Type III nylon cord.

**5.** Cluster and tie or tape (breakaway technique) all sling legs together on top of the trailer to prevent entanglement during hookup and lift-off.

***Figure 3-21. HMT Trailer With Sentinel AN/MPQ-64 Antenna Transmitter Group (ATG)***

## 3-23. HMT Trailer With Remote Landing Site Tower (RLST)

**a. Applicability.** The following item in Table 3-22 is certified for all helicopters with suitable lift capacity by the US Army Soldier Systems Center:

**Table 3-22. HMT Trailer With Remote Landing Site Tower (RLST)**

| NOMENCLATURE | MAX WEIGHT (POUNDS) | SLING SET | LINK COUNT FRONT/REAR | RECOMMENDED AIRSPEED (KNOTS) |
|---|---|---|---|---|
| Remote Landing Site Tower (RLST) | 3,600 | 15K | 3/15 | 120 |

**b. Materials.** The following materials are required to rig this load:

**(1)** Sling set (15,000-pound capacity).

**(a)** Chain length, part number 34080-4, from 15,000-pound capacity sling sets (8 each).

**(b)** Coupling link, part number 31611, from 15,000-pound capacity sling sets (8 each).

**(2)** Tape, adhesive, pressure-sensitive, 2-inch wide roll.

**(3)** Cord, nylon, Type III, 550-pound breaking strength.

**(4)** Webbing, cotton, 1/4-inch, 80-pound breaking strength.

**(5)** Felt sheet, cattle hair, Type IV, 1/2-inch or suitable padding

**c. Personnel.** Two persons can prepare and rig this load in 15 minutes.

**d. Procedures.** The following procedures apply to this load:

**(1) Preparation.** Prepare the load using the following steps:

**(a)** Engage the hand brakes.

**(b)** Secure loose fittings, wires, and cables with tape or Type III nylon cord. Tape the trailer lights and the cable on the spool.

**(c)** Retract the jack wheel to the lowest position. Position the rear stabilizers in the highest position.

**(d)** Place the cover over the aft rack and secure the loose ends of the straps with tape.

**(e)** Extend the sling leg chains by connecting two additional chain lengths to each chain using the coupling links.

**(2) Rigging.** Rig the load according to the steps in Figure 3-22.

**(3) Hookup.** The hookup team stands beside the trailer. The static wand person discharges the static electricity with the static wand. The hookup person places the apex fitting onto the aircraft cargo hook. The hookup team then carefully dismounts the vehicle and remains close to the load as the helicopter removes slack from the sling legs. When successful hookup is assured, the hookup team quickly exits the area underneath the helicopter to the designated rendezvous point.

**CAUTION**

**Ensure the sling legs do not snag on the antenna or the pole at the corner of the trailer.**

**(4) Derigging.** Derigging is the reverse of the preparation and rigging procedures in steps d (1) and d (2).

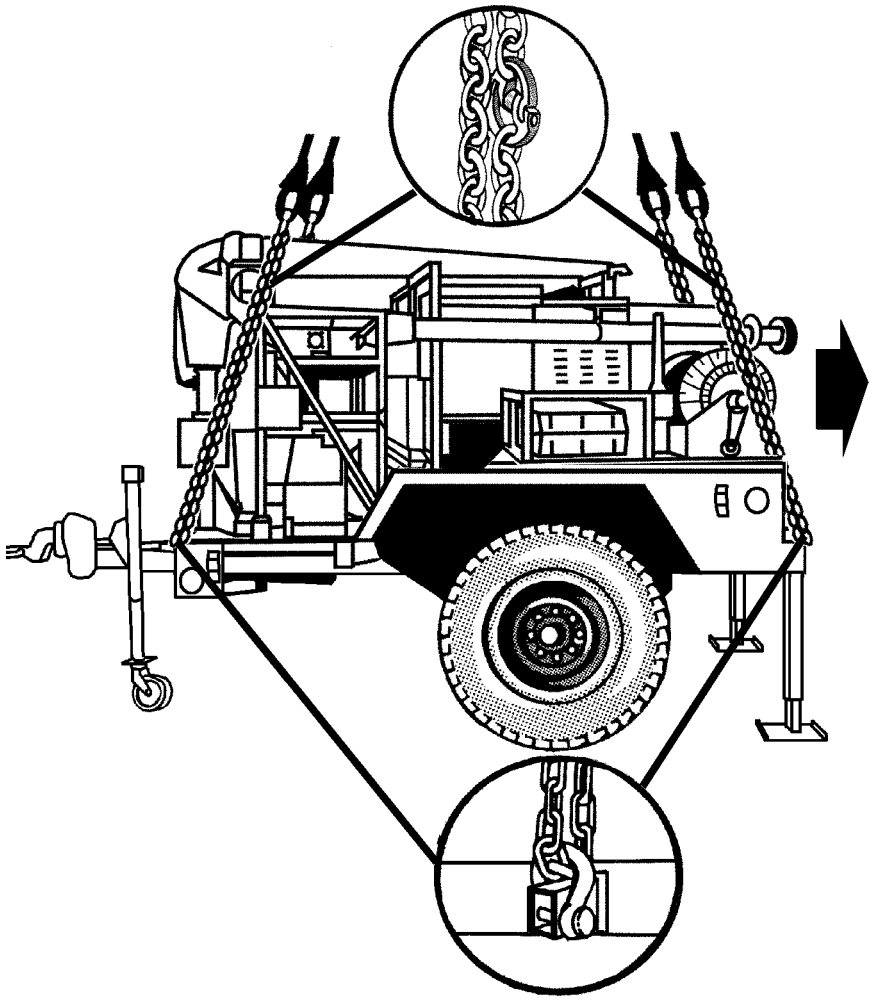

**RIGGING STEPS**

**1.** Position the web ring beside the trailer. Route outer sling legs 1and 2 to the aft of the trailer and inner sling legs 3 and 4 to the front (lunette end). Sling legs 1 and 3 must be on the left side of the load.

**2.** Loop the chain end of sling leg 1 through the left front lift provision of the trailer. Place the correct link from Table 3-22 in the grab hook. Repeat with sling leg 2 through the right front lift provision.

**3.** Route the chain end of sling leg 3 through the left rear lift provision (lunette end). Place the correct link from Table 3-22 in the grab hook. Repeat with sling leg 4 through the right rear lift provision (lunette end). Secure excess chain with tape or Type III nylon cord.

**4.** Pad the sling legs or chains where they make contact with the load.

**5.** Cluster and tie or tape (breakaway technique) all sling legs together on top of the trailer to prevent entanglement during hookup and lift-off.

*Figure 3-22. HMT Trailer With Remote Landing Site Tower (RLST)*

## 3-24. M105A3 Trailer

**a. Applicability.** The following item in Table 3-23 is certified for all helicopters with suitable lift capacity by the US Army Soldier Systems Center:

**Table 3-23. M105A3 Trailer**

| NOMENCLATURE | MAX WEIGHT (POUNDS) | SLING SET | LINK COUNT FRONT/REAR | RECOMMENDED AIRSPEED (KNOTS) |
|---|---|---|---|---|
| M105A3 Trailer, Empty | 2,600 | 10K | 3/40 | 80 |
| M105A3 Trailer, Loaded | 5,580 | 10K | 3/40 | 110 |

**b. Materials.** The following materials are required to rig this load:

**(1)** Sling set (10,000-pound capacity).

**(2)** Tape, adhesive, pressure-sensitive, 2-inch wide roll.

**(3)** Cord, nylon, Type III, 550-pound breaking strength.

**(4)** Webbing, cotton, 1/4-inch, 80-pound breaking strength.

**c. Personnel.** Two persons can prepare and rig this load in 10 minutes.

**d. Procedures.** The following procedures apply to this load:

**(1) Preparation.** Prepare the load using the following steps:

**(a)** Raise the trailer's jack stand so the pintle is on the ground.

**(b)** Engage the hand brakes.

**(c)** Tape or tie the light cable, safety chains, and brake hose to the top of the drawbar.

**(2) Rigging.** Rig the load according to the steps in Figure 3-23.

**(3) Hookup.** The hookup team stands on the trailer bed. The static wand person discharges the static electricity with the static wand. The hookup person places the apex fitting onto the aircraft cargo hook. The hookup team then carefully dismounts the vehicle and remains close to the load as the helicopter removes slack from the sling legs. When successful hookup is assured, the hookup team quickly exits the area underneath the helicopter to the designated rendezvous point.

**(4) Derigging.** Derigging is the reverse of the preparation and rigging procedures in steps d (1) and d (2).

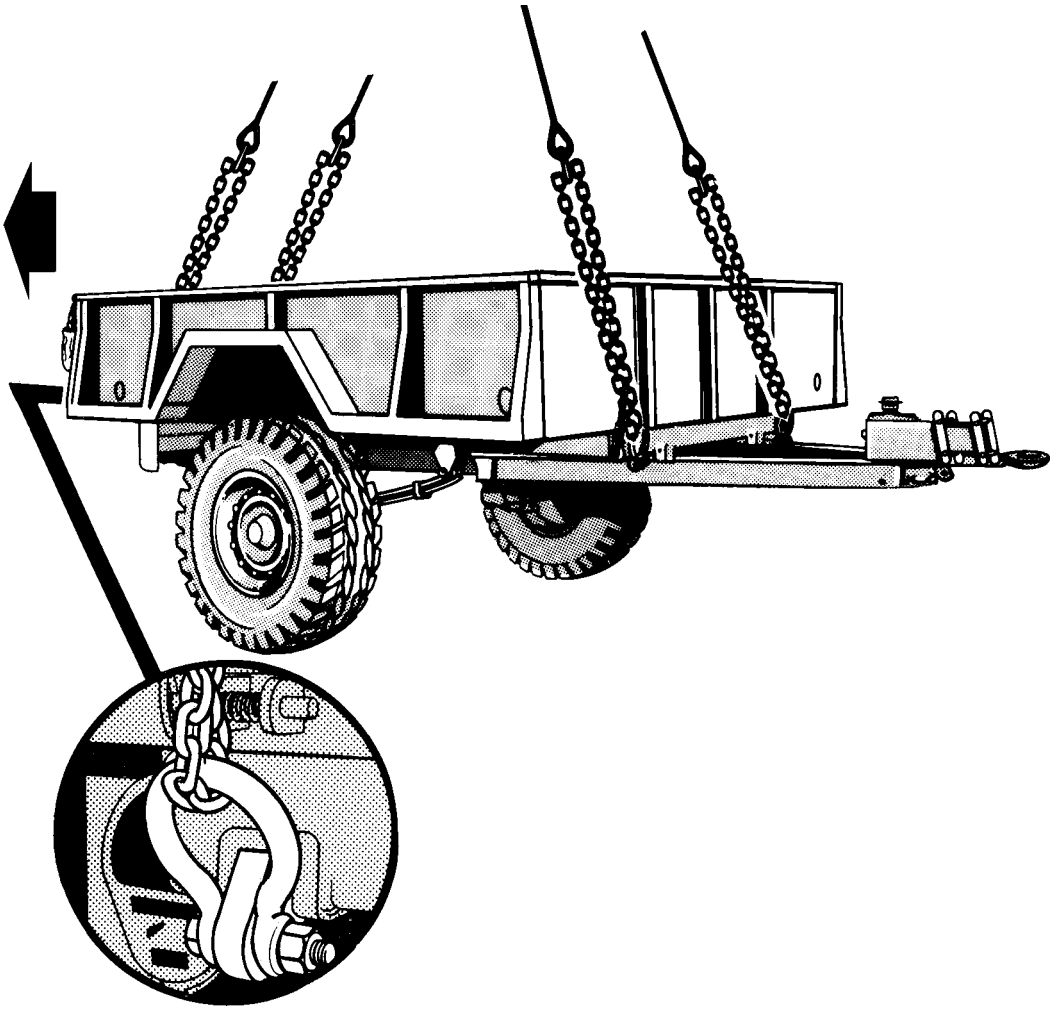

**RIGGING STEPS**

**1.** Position the apex fitting beside the trailer. Route outer sling legs 1and 2 to the front of the trailer (tailgate end) and inner sling legs 3 and 4 to the rear (lunette end). Sling legs 1 and 3 must be on the left side of the load.

**2.** Loop the chain end of sling leg 1 through the left front lift provision of the trailer. Place the correct link from Table 3-23 in the grab hook. Repeat with sling leg 2 through the right front lift provision.

**3.** Route the chain end of sling leg 3 through the left rear lift provision (lunette end). Place the correct link from Table 3-23 in the grab hook. Repeat with sling leg 4 through the right rear lift provision (lunette end). Secure excess chain with tape or Type III nylon cord.

**4.** Cluster and tie or tape (breakaway technique) all sling legs together on top of the trailer to prevent entanglement during hookup and lift-off.

*Figure 3-23. M105A3 Trailer*

## 3-25. M332 Ammunition Trailer, 1 1/2-Ton

**a. Applicability.** The following item in Table 3-24 is certified for all helicopters with suitable lift capacity by the US Army Soldier Systems Center:

**Table 3-24. M332 Ammunition Trailer, 1 1/2-Ton**

| NOMENCLATURE | MAX WEIGHT (POUNDS) | SLING SET | LINK COUNT FRONT/REAR | RECOMMENDED AIRSPEED (KNOTS) |
|---|---|---|---|---|
| M332 Ammunition Trailer, 1 1/2-Ton | 5,780 | 10K | 10/3 | 120 |

**b. Materials.** The following materials are required to rig this load:

**(1)** Sling set (10,000-pound capacity).

**(2)** Tape, adhesive, pressure-sensitive, 2-inch wide roll.

**(3)** Cord, nylon, Type III, 550-pound breaking strength.

**(4)** Webbing, cotton, 1/4-inch, 80-pound breaking strength.

**c. Personnel.** Two persons can prepare and rig this load in 15 minutes.

**d. Procedures.** The following procedures apply to this load:

**(1) Preparation.** Prepare the load using the following steps:

**(a)** Secure all loose items, lids, and caps with tape or Type III nylon cord.

**(b)** Engage the hand brakes.

**(c)** Tape or tie the light cable, safety chains, and brake hose to the top of the drawbar.

**(d)** Place the telescoping leg in the down position.

**(2) Rigging.** Rig the load according to the steps in Figure 3-24.

**(3) Hookup.** The hookup team stands on the trailer bed. The static wand person discharges the static electricity with the static wand. The hookup person places the apex fitting onto the aircraft cargo hook. The hookup team then carefully dismounts the vehicle and remains close to the load as the helicopter removes slack from the sling legs. When successful hookup is assured, the hookup team quickly exits the area underneath the helicopter to the designated rendezvous point.

**(4) Derigging.** Derigging is the reverse of the preparation and rigging procedures in steps d (1) and d (2).

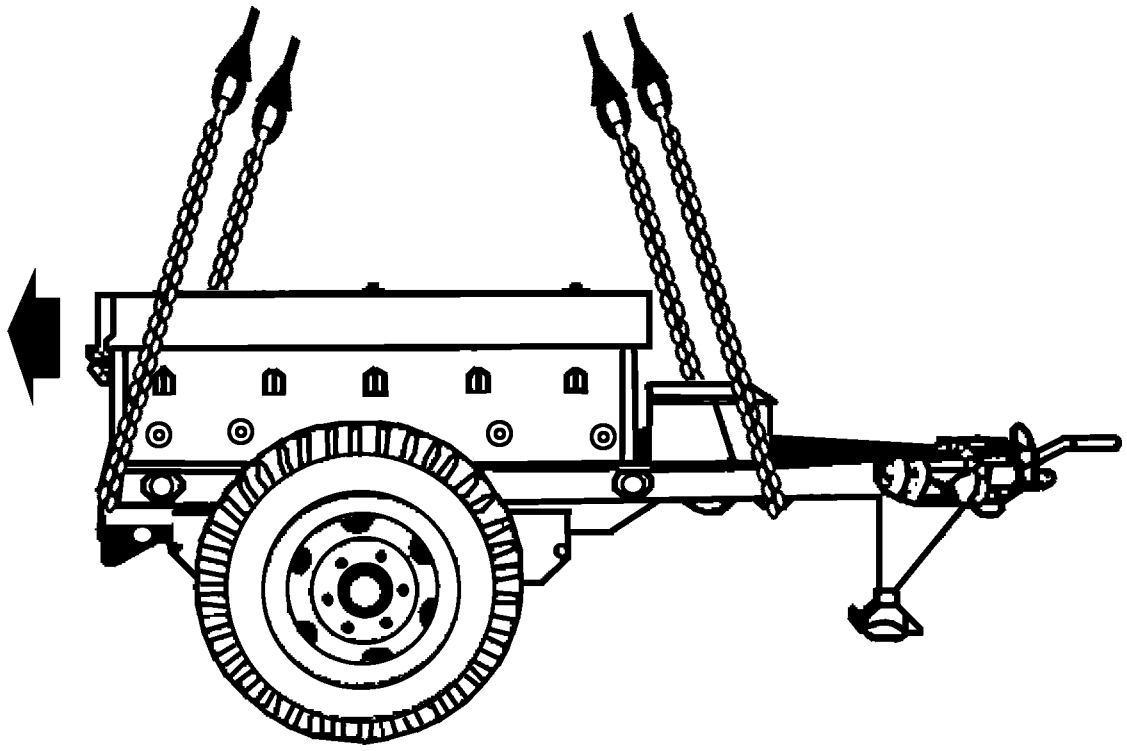

**RIGGING STEPS**

**1.** Position the apex fitting in the trailer bed. Route outer sling legs 1and 2 to the front of the trailer (lunette end) and inner sling legs 3 and 4 to the rear (tailgate end). Sling legs 1 and 3 must be on the left side of the load.

**2.** Loop the chain end of sling leg 1 through the left front lift provision located on the left side of the A-frame drawbar. Place the correct link from Table 3-24 in the grab hook. Repeat with sling leg 2 through the right front lift provision. Secure excess chain with tape or Type III nylon cord.

**3.** Route the chain end of sling leg 3 through the left rear lift provision (tailgate end). Place the correct link from Table 3-24 in the grab hook. Repeat with sling leg 4 through the right rear lift provision.

**4.** Cluster and tie or tape (breakaway technique) all sling legs together on top of the trailer to prevent entanglement during hookup and lift-off.

***Figure 3-23. M332 Ammunition Trailer, 1 1/2-Ton***

## 3-26. AS-4492/TSC, Lightweight, High Gain, X-band Antenna (LHGXA) Trailer

**a. Applicability.** The following item in Table 3-25 is certified for all helicopters with suitable lift capacity by the US Army Soldier Systems Center:

**Table 3-25. AS-4492/TSC, Lightweight, High Gain, X-band Antenna (LHGXA) Trailer**

| NOMENCLATURE | MAX WEIGHT (POUNDS) | SLING SET | LINK COUNT FRONT/REAR | RECOMMENDED AIRSPEED (KNOTS) |
|---|---|---|---|---|
| AS-4492/TSC, Lightweight, High Gain, X-band Antenna (LHGXA) Trailer | 3,820 | 10K | 60/10 | 90 |

**WARNING**

**DO NOT SLING LOAD THE LHGXA IN THE DUAL POINT CONFIGURATION AS STRUCTURAL DAMAGE MAY OCCUR TO THE LOAD.**

**b. Materials.** The following materials are required to rig this load:

**(1)** Sling set (10,000-pound capacity).

**(2)** Additional apex fitting (10,000-pound capacity).

**(3)** Polyester round sling, green, 17-foot (4,200-pound capacity) used as a vertical pendant.

**(4)** Tape, adhesive, pressure-sensitive, 2-inch wide roll.

**(5)** Cord, nylon, Type III, 550-pound breaking strength.

**(6)** Webbing, cotton, 1/4-inch, 80-pound breaking strength.

**(7)** Felt sheet, cattle hair, Type IV, 1/2-inch or suitable padding.

**c. Personnel.** Two persons can prepare and rig this load in 15 minutes.

**d. Procedures.** The following procedures apply to this load:

**(1) Preparation.** Prepare the load using the following steps:

**(a)** Prepare the LHGXA for sling loading in accordance with the operator's manual.

**(b)** Install the shackles and lift cables in accordance with the operator's manual.

**(c)** Tape or tie the light cable to the top of the drawbar.

**(d)** Fully retract the rear trailer jacks. Lower the tongue jack to the position nearest the ground.

**(e)** Engage the parking brake.

**(2) Rigging.** Rig the load according to the steps in Figure 3-25.

**(3) Hookup.** The hookup team stands beside the trailer. The static wand person discharges the static electricity with the static wand. The hookup person places the apex fitting onto the aircraft cargo hook. The hookup team remains close to the load as the helicopter removes slack from the sling legs. When successful hookup is assured, the hookup team quickly exits the area underneath the helicopter to the designated rendezvous point.

**(4) Derigging.** Derigging is the reverse of the preparation and rigging procedures in steps d (1) and d (2).

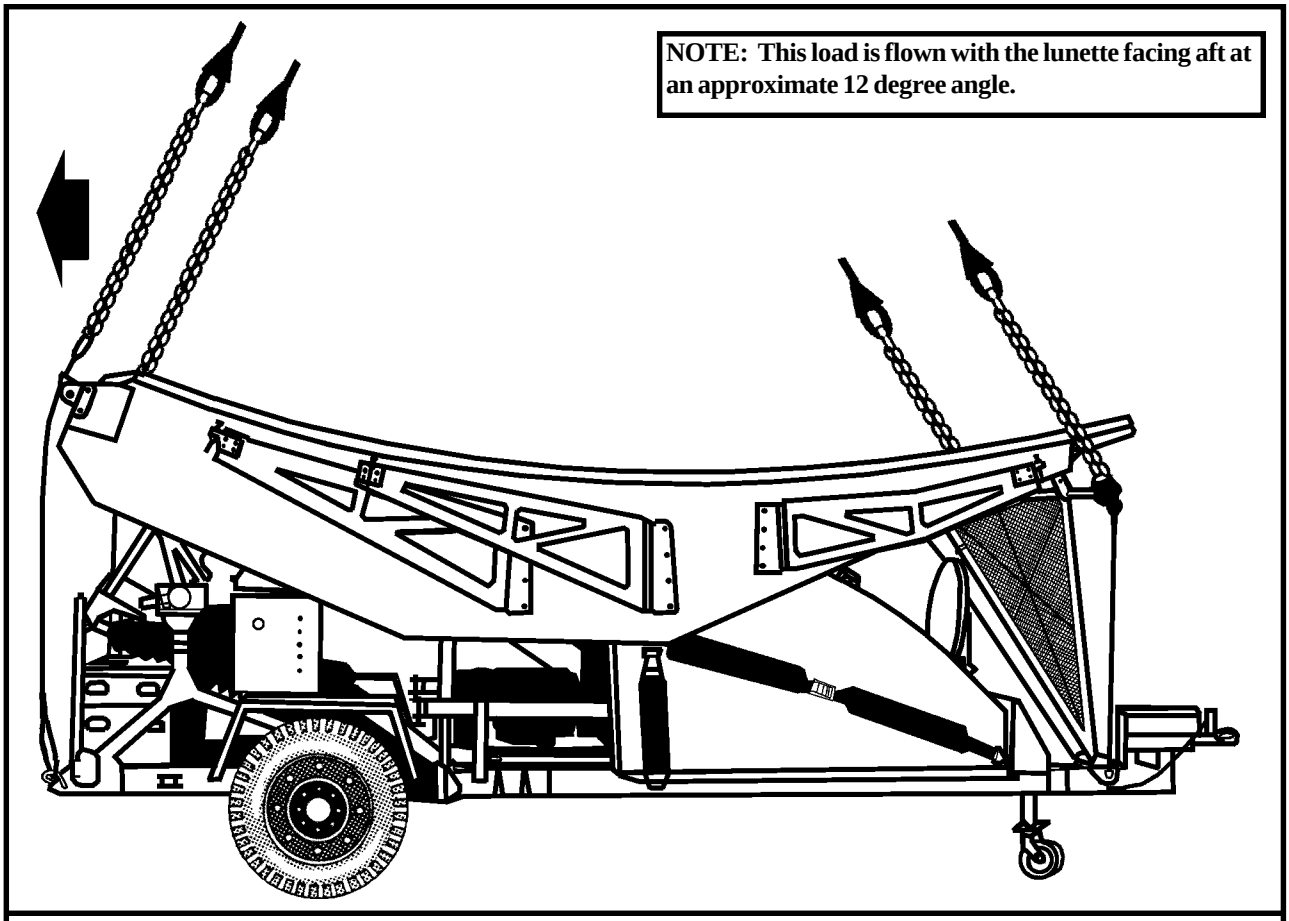


**RIGGING STEPS**

**1.** Position the apex fitting beside the trailer. Route outer sling legs 1and 2 to the front (lunette end) of the trailer and inner sling legs 3 and 4 to the rear . Sling legs 1 and 3 must be on the left side of the load.

**2.** Loop the chain end of sling leg 1 through the left front lift provision. Place the correct link from Table 3-25 in the grab hook. Repeat with sling leg 2 through the right front lift provision. Secure excess chain with tape or Type III nylon cord.

**3.** Route the chain end of sling leg 3 through the left rear lift provision. Place the correct link from Table 3-25 in the grab hook. Repeat with sling leg 4 through the right rear lift provision. Secure excess chain with tape or Type III nylon cord.

**4.** Pad each chain with felt padding. Secure the padding with tape.

**5.** Install a 17-foot polyester round sling on the bolt end of the apex fitting on the sling set. Tape the eye of the sling to prevent the apex fitting from rotating through the eye.

**6.** Place the free end of the 17-foot polyester round sling on the bell portion of the additional apex fitting. Tape the eye of the sling to prevent the apex fitting from rotating through the eye.

**7.** Cluster and tie or tape (breakaway technique) all sling legs together on top of the trailer to prevent entanglement during hookup and lift-off.

***Figure 3-25. AS-4492/TSC, Lightweight, High Gain, X-band Antenna (LHGXA) Trailer***

## 3-27. XM1112 400 Gallon Water Trailer

**a. Applicability.** The following item in Table 3-26 is certified for all helicopters with suitable lift capacity by the US Army Soldier Systems Center:

**Table 3-26. XM1112 400 Gallon Water Trailer**

| NOMENCLATURE | MAX WEIGHT (POUNDS) | SLING SET | LINK COUNT FRONT/REAR | RECOMMENDED AIRSPEED (KNOTS) |
|---|---|---|---|---|
| XM1112 400 Gallon Water Trailer, Empty | 3,860 | 10K | 3/3 | 80 |

**CAUTION**
**This load is certified only when empty. Do not lift the trailer loaded.**

**b. Materials.** The following materials are required to rig this load:

**(1)** Sling set (10,000-pound capacity).

**(2)** Tape, adhesive, pressure-sensitive, 2-inch wide roll.

**(3)** Cord, nylon, Type III, 550-pound breaking strength.

**(4)** Webbing, cotton, 1/4-inch, 80-pound breaking strength.

**(5)** Felt sheet, cattle hair, Type IV, 1/2-inch or suitable padding.

**c. Personnel.** Two persons can prepare and rig this load in 10 minutes.

**d. Procedures.** The following procedures apply to this load:

**(1) Preparation.** Prepare the load using the following steps:

**(a)** Secure all loose chains, hoses, and cables to the trailer drawbar with tape or Type III nylon cord.

**(b)** Ensure the tongue wheel is in the down and locked position.

**(c)** Close and secure the tank lid.

**(d)** Engage the parking brake.

**(2) Rigging.** Rig the load according to the steps in Figure 3-26.

**(3) Hookup.** The hookup team stands on the trailer fenders or the front of the trailer. The static wand person discharges the static electricity with the static wand. The hookup person places the apex fitting onto the aircraft cargo hook. The hookup team then carefully dismounts the trailer and remains close to the load as the helicopter removes slack from the sling legs. When successful hookup is assured, the hookup team quickly exits the area underneath the helicopter to the designated rendezvous point.

**(4) Derigging.** Derigging is the reverse of the preparation and rigging procedures in steps d (1) and d (2).

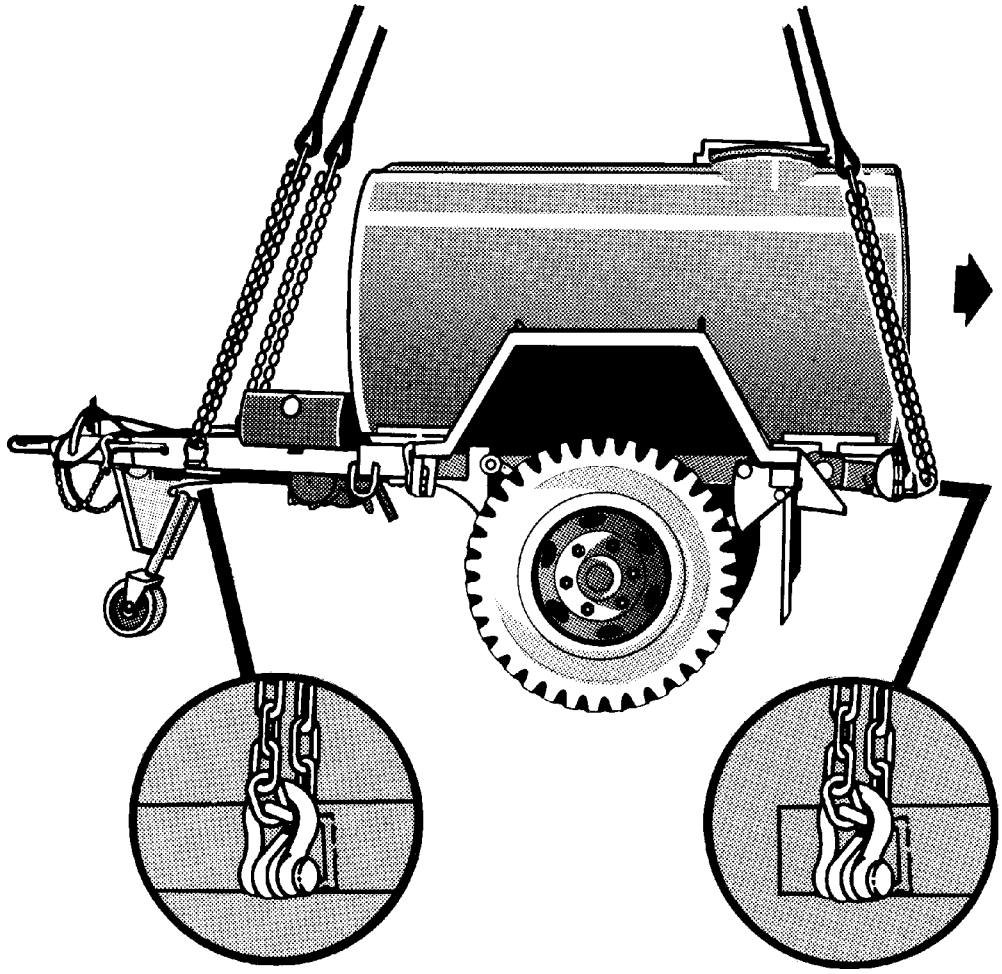

**RIGGING STEPS**

**1.** Position the apex fitting on top of the water tank. Route outer sling legs 1and 2 to the front of the trailer and inner sling legs 3 and 4 to the rear. Sling legs 1 and 3 must be on the left side of the load.

**2.** Loop the chain end of sling leg 1 through the left front lift provision located on the left front corner of the trailer. Place the correct link from Table 3-26 in the grab hook. Repeat with sling leg 2 through the right front lift provision.

**3.** Route the chain end of sling leg 3 through the left rear lift provision. Place the correct link from Table 3-26 in the grab hook. Repeat with sling leg 4 through the right rear lift provision.

**4.** Pad the chains where they make contact with the trailer.

**5.** Cluster and tie or tape (breakaway technique) all sling legs together on top of the trailer to prevent entanglement during hookup and lift-off.

***Figure 3-26. XM1112 400 Gallon Water Trailer***

## 3-28. M1082 Light Medium Tactical Vehicle (LMTV) and M1095 Medium Tactical Vehicle (MTV) Trailers

**a. Applicability.** The following items in Table 3-27 are certified for all helicopters with suitable lift capacity by the US Army Soldier Systems Center:

**Table 3-27. M1082 Light Medium Tactical Vehicle (LMTV) and M1095 Medium Tactical Vehicle (MTV) Trailers**

| NOMENCLATURE | MAX WEIGHT (POUNDS) | SLING SET | LINK COUNT FRONT / REAR | RECOMMENDED AIRSPEED (KNOTS) |
|---|---|---|---|---|
| M1082 LMTV Trailer | 11,510 | 25K | 10/3 | 70 |
| M1095 MTV Trailer | 15,780 | 25K | 10/3 | 70 |

**b. Materials.** The following materials are required to rig this load:

**(1)** Sling set (25,000-pound capacity).

**(2)** Tape, adhesive, pressure-sensitive, 2-inch wide roll.

**(3)** Cord, nylon, Type III, 550-pound breaking strength.

**(4)** Webbing, cotton, 1/4-inch, 80-pound breaking strength.

**c. Personnel.** Two persons can prepare and rig this load in 10 minutes.

**d. Procedures.** The following procedures apply to this load:

**(1) Preparation.** Prepare the load using the following steps:

**(a)** Position the trailer's jack stand in the down position so the trailer sets level.

**(b)** Secure all loose chains, hoses, and cables to the trailer drawbar with tape or Type III nylon cord.

**(c)** Engage the parking brake.

**(d)** Extend the lift provision bars to the widest position and lock into place with the locking pins. Secure the locking pins in place with tape.

**Note: Ensure the lift eyes on the lift provision bars are perpendicular to the ground.**

**(e)** Remove the side and end panels and stow in the storage boxes under the bed of the trailer. Secure the storage latches with tape.

**(2) Rigging.** Rig the load according to the steps in Figure 3-27.

**(3) Hookup.** The hookup teams stand in the bed of the trailer. The static wand person discharges the static electricity with the static wand. The hookup person places the apex fitting on the cargo hook. The hookup team then carefully dismounts the trailer and remains close to the load as the helicopter removes slack from the sling legs. When successful hookup is assured, the hookup team quickly exits the area underneath the helicopter to the designated rendezvous point.

**(4) Derigging.** Derigging is the reverse of the preparation and rigging procedures in steps d (1) and d (2).

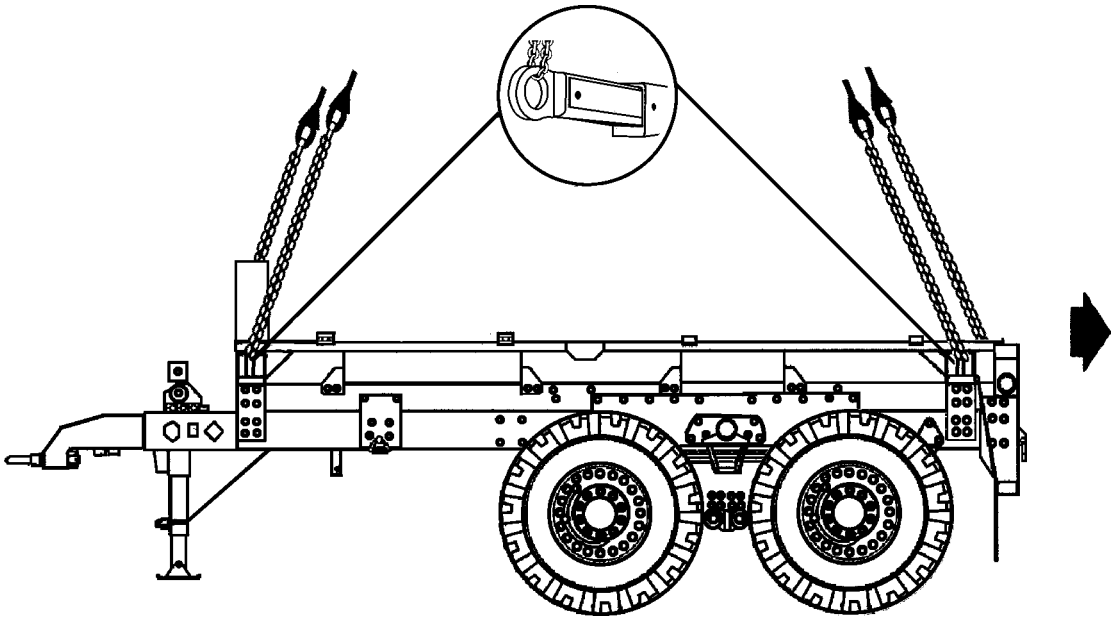

**RIGGING STEPS**

**1.** Position the apex fitting on top of the trailer. Route outer sling legs 1 and 2 to the front of the trailer and inner sling legs 3 and 4 to the rear. Sling legs 1 and 3 must be on the left side of the load.

**2.** Loop the chain end of sling leg 1 through the left front lift provision bar located on the left front corner of the trailer (lunette end) . Place the correct link from Table 3-27 in the grab hook. Repeat with sling leg 2 through the right front lift provision.

**3.** Loop the chain end of sling leg 3 through the left rear lift provision bar located on the left rear corner of the trailer. Place the correct link from Table 3-27 in the grab hook. Repeat with sling leg 4 through the right rear lift provision.

**4.** Secure all excess chain with tape or Type III nylon cord.

**5.** Cluster and tie or tape (breakaway technique) the sling legs in each sling set together to prevent entanglement during hookup and lift-off.

***Figure 3-27. M1082 Light Medium Tactical Vehicle (LMTV) and M1095 Medium Tactical Vehicle (MTV) Trailers***

## 3-29. Small Portable Expeditionary Aeromedical Rapid Response (SPEARR) Trailer

**a. Applicability.** The following item in Table 3-28 is certified for all helicopters with suitable lift capacity by the US Army Soldier Systems Center:

**Table 3-28. Small Portable Expeditionary Aeromedical Rapid Response (SPEARR) Trailer**

| NOMENCLATURE | MAX WEIGHT (POUNDS) | SLING SET | LINK COUNT FRONT / REAR | RECOMMENDED AIRSPEED (KNOTS) |
|---|---|---|---|---|
| Small Portable Expeditionary Aeromedical Rapid Response (SPEARR) Trailer | 6,100 | 10K | Listed in Rigging Steps | 80 |

**b. Materials.** The following materials are required to rig this load:

**(1)** Sling set (10,000-pound capacity).

**(2)** Tape, adhesive, pressure-sensitive, 2-inch wide roll.

**(3)** Cord, nylon, Type III, 550-pound breaking strength.

**(4)** Webbing, cotton, 1/4-inch, 80-pound breaking strength.

**c. Personnel.** Two persons can prepare and rig this load in 10 minutes.

**d. Procedures.** The following procedures apply to this load:

**(1) Preparation.** Prepare the load using the following steps:

**(a)** Position the trailer's jack stand in the down position so the lunette is near the ground.

**(b)** Secure all loose chains, hoses, and cables to the trailer drawbar with tape or Type III nylon cord.

**(c)** Secure all lids, doors, and caps with tape or Type III nylon cord.

**(d)** Ensure the stabilizer legs are retracted and stowed.

**(e)** Release the curb side lift provisions from the stowage straps. Secure the stowage straps to the trailer with tape.

**(2) Rigging.** Rig the load according to the steps in Figure 3-28.

**(3) Hookup.** The hookup teams stand on the roof of the trailer. The static wand person discharges the static electricity with the static wand. The hookup person places the apex fitting on the cargo hook. The hookup team then carefully dismounts the trailer and remains close to the load as the helicopter removes slack from the sling legs. When successful hookup is assured, the hookup team quickly exits the area underneath the helicopter to the designated rendezvous point.

**NOTE: This load is flown with the rear of the trailer facing forward.**

**(4) Derigging.** Derigging is the reverse of the preparation and rigging procedures in steps d (1) and d (2).

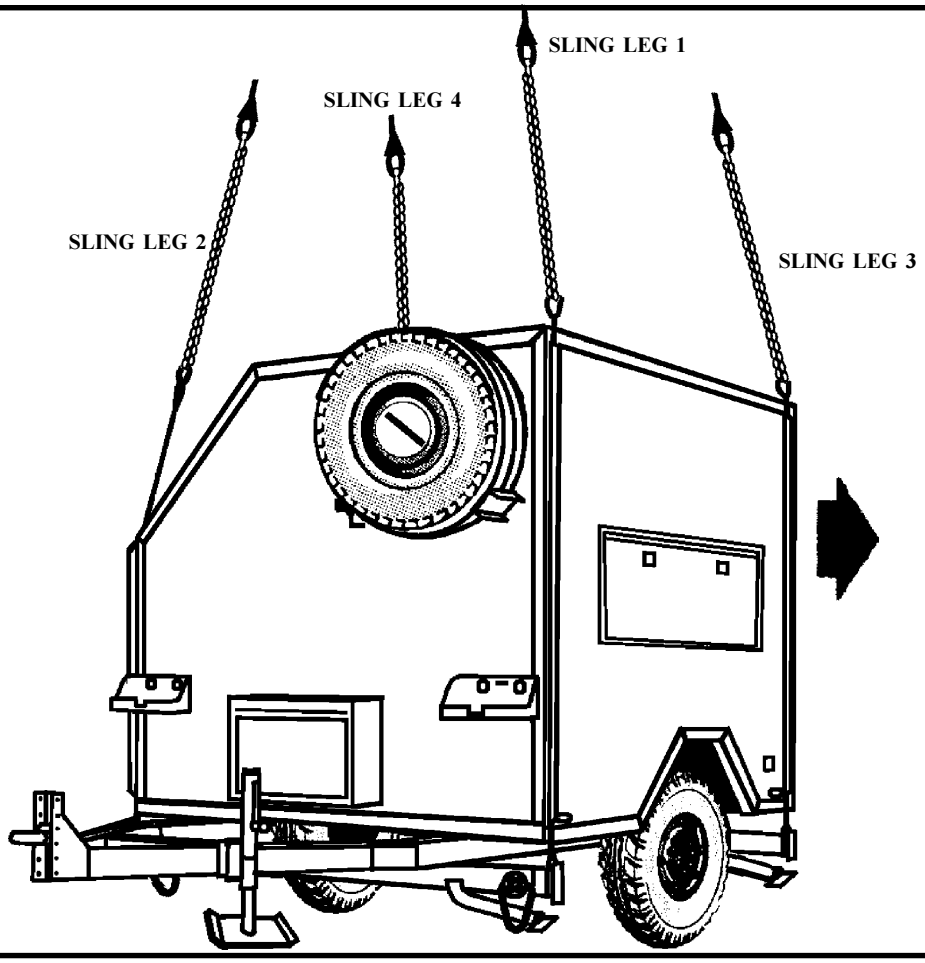


**RIGGING STEPS**

**1.** Position the apex fitting on top of the trailer roof. Route outer sling legs 1 and 2 to the front of the trailer (lunette end) and inner sling legs 3 and 4 to the rear. Sling legs 1 and 3 must be on the left side of the load.

**2.** Loop the chain end of sling leg 1 through the left front lift provision located on the left front corner of the trailer roof (lunette end) . Place link 20 in the grab hook.

**3.** Loop the chain end of sling leg 2 through the right front lift provision located on the right front corner of the trailer roof (lunette end) . Place link 30 in the grab hook.

**4.** Loop the chain end of sling leg 3 through the left rear lift provision located on the left rear corner of the trailer roof. Place link 3 in the grab hook.

**5.** Loop the chain end of sling leg 4 through the right rear lift provision located on the right rear corner of the trailer roof. Place link 10 in the grab hook.

**6.** Secure all excess chain with tape or Type III nylon cord.

**7.** Cluster and tie or tape (breakaway technique) the sling legs in each sling set together to prevent entanglement during hookup and lift-off.

*Figure 3-28. Small Portable Expeditionary Aeromedical Rapid Response (SPEARR) Trailer*

## 3-30. Minimum Operating Strip Lighting System (MOSLS)

**a. Applicability.** The following item in Table 3-29 is certified for all helicopters with suitable lift capacity by the US Army Soldier Systems Center:

**Table 3-29. Minimum Operating Strip Lighting System (MOSLS)**

| NOMENCLATURE | MAX WEIGHT (POUNDS) | SLING SET | LINK COUNT FRONT / REAR | RECOMMENDED AIRSPEED (KNOTS) |
|---|---|---|---|---|
| Minimum Operating Strip Lighting System (MOSLS) with Spreader Bars | 3,350 | 15K | 10/3 | 70 |

**b. Materials.** The following materials are required to rig this load:

**(1)** Sling set (15,000-pound capacity).

**(2)** Tape, adhesive, pressure-sensitive, 2-inch wide roll.

**(3)** Cord, nylon, Type III, 550-pound breaking strength.

**(4)** Webbing, cotton, 1/4-inch, 80-pound breaking strength.

**(5)** Padding, cellulose.

**(6)** Spreader bar, HMMWV (2 each).

**c. Personnel.** Two persons can prepare and rig this load in 10 minutes.

**d. Procedures.** The following procedures apply to this load:

**(1) Preparation.** Prepare the load using the following steps:

**(a)** Position the trailer's jack stand in the down position so the lunette is near the ground.

**(b)** Secure all loose chains, hoses, and cables to the trailer drawbar with tape or Type III nylon cord.

**(c)** Secure all lids, doors, and caps with tape or Type III nylon cord.

**(d)** Ensure the stabilizer legs are retracted and stowed.

**(e)** Engage the parking brake.

**(2) Rigging.** Rig the load according to the steps in Figure 3-29.

**(3) Hookup.** The hookup teams stand on the roof of the trailer. The static wand person discharges the static electricity with the static wand. The hookup person places the apex fitting on the cargo hook. The hookup team then carefully dismounts the trailer and remains close to the load as the helicopter removes slack from the sling legs. When successful hookup is assured, the hookup team quickly exits the area underneath the helicopter to the designated rendezvous point.

**NOTE: This load is flown with the rear of the trailer facing forward.**

**(4) Derigging.** Derigging is the reverse of the preparation and rigging procedures in steps d (1) and d (2).

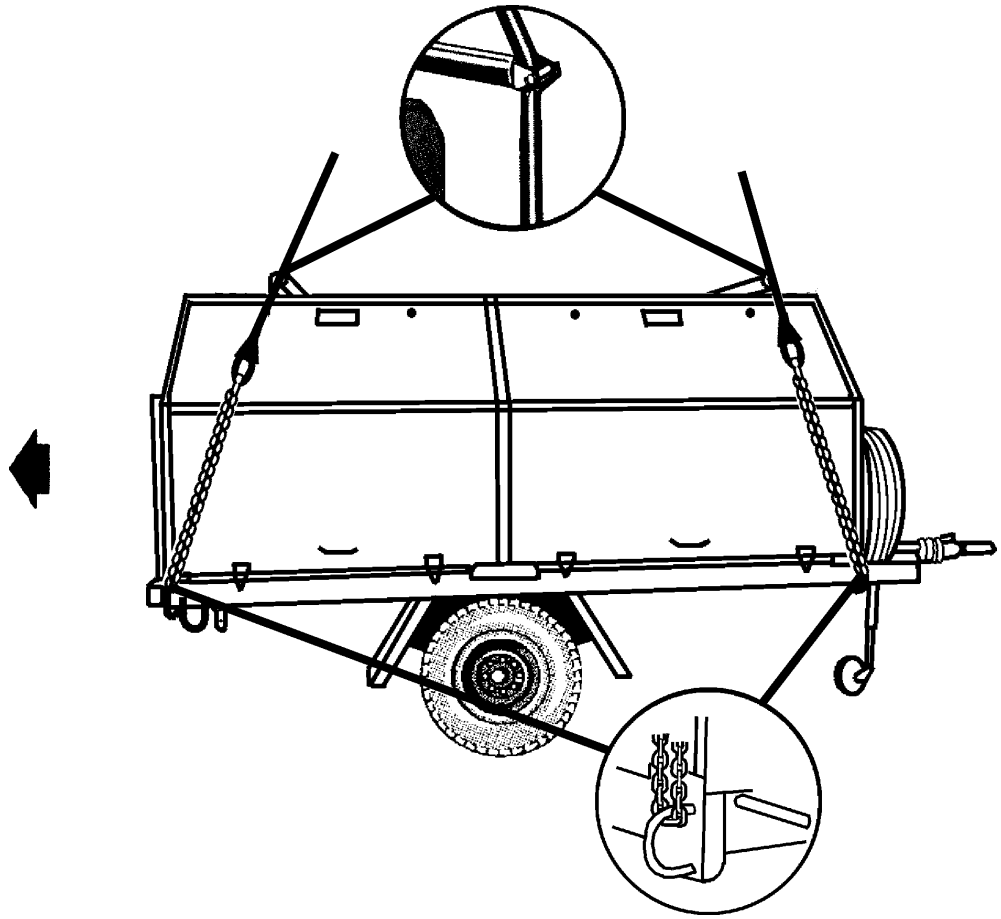

**RIGGING STEPS**

**1.** Position the apex fitting on top of the trailer. Route outer sling legs 1 and 2 to the front of the trailer (lunette end) and inner sling legs 3 and 4 to the rear. Sling legs 1 and 3 must be on the left side of the load.

**2.** Loop the chain end of sling leg 1 through the vertical left front lift provision located on the left front corner of the trailer (lunette end) . Place the correct link from Table 3-29 in the grab hook. Repeat with sling leg 2 through the vertical right front lift provision.

**3.** Loop the chain end of sling leg 3 through the vertical left rear lift provision located on the left rear corner of the trailer. Place the correct link from Table 3-29 in the grab hook. Repeat with sling leg 4 through the vertical right rear lift provision.

**4.** Secure all excess chain with tape or Type III nylon cord.

**5.** Extend the sling set above the trailer. Position the spreader bar between the front slings 6-inches above the trailer roof. Secure the spreader bar to the slings with Type III nylon cord and tape. Repeat the procedure with the second spreader bar and the rear slings.

**6.** Cluster and tie or tape (breakaway technique) the sling legs in each sling set together to prevent entanglement during hookup and lift-off.

*Figure 3-29. Minimum Operating Strip Lighting System (MOSLS)*

## 3-31. Assault Command Post With High Mobility Wheel Set

**a. Applicability.** The following item in Table 3-30 is certified for all helicopters with suitable lift capacity by the US Army Soldier Systems Center:

**Table 3-30. Assault Command Post With High Mobility Wheel Set**

| NOMENCLATURE | MAX WEIGHT (POUNDS) | SLING SET | LINK COUNT FRONT / REAR | RECOMMENDED AIRSPEED (KNOTS) |
|---|---|---|---|---|
| Assault Command Post (ACP), Housed in Expandable Light Airmobile Shelter (ELAMS), with High Speed Mobile Wheel Set | 13,240 | 25K | ECU is Front 3/3 | 80 |

**b. Materials.** The following materials are required to rig this load:

**(1)** Sling set (25,000-pound capacity).

**(2)** Tape, adhesive, pressure-sensitive, 2-inch wide roll.

**(3)** Cord, nylon, Type III, 550-pound breaking strength.

**(4)** Webbing, cotton, 1/4-inch, 80-pound breaking strength.

**c. Personnel.** Two persons can prepare and rig this load in 15 minutes.

**d. Procedures.** The following procedures apply to this load:

**(1) Preparation.** Prepare the load using the following steps:

**(a)** Ensure manufacturer approved tiedown assemblies (2 each) are in place between the shelter and each wheel set.

**(b)** Remove all antennas and secure inside the shelter.

**(c)** Secure all lids, doors, and caps with tape or Type III nylon cord.

**(d)** Secure all loose equipment inside the shelter with tape, lashings, or Type III nylon cord.

**(e)** Secure the tow bar in the up position.

**(2) Rigging.** Rig the load according to the steps in Figure 3-30.

**(3) Hookup.** The hookup teams stand on the roof of the shelter. The static wand person discharges the static electricity with the static wand. The hookup person places the apex fitting on the cargo hook. The hookup team then carefully dismounts the trailer and remains close to the load as the helicopter removes slack from the sling legs. When successful hookup is assured, the hookup team quickly exits the area underneath the helicopter to the designated rendezvous point.

**(4) Derigging.** Derigging is the reverse of the preparation and rigging procedures in steps d (1) and d (2).

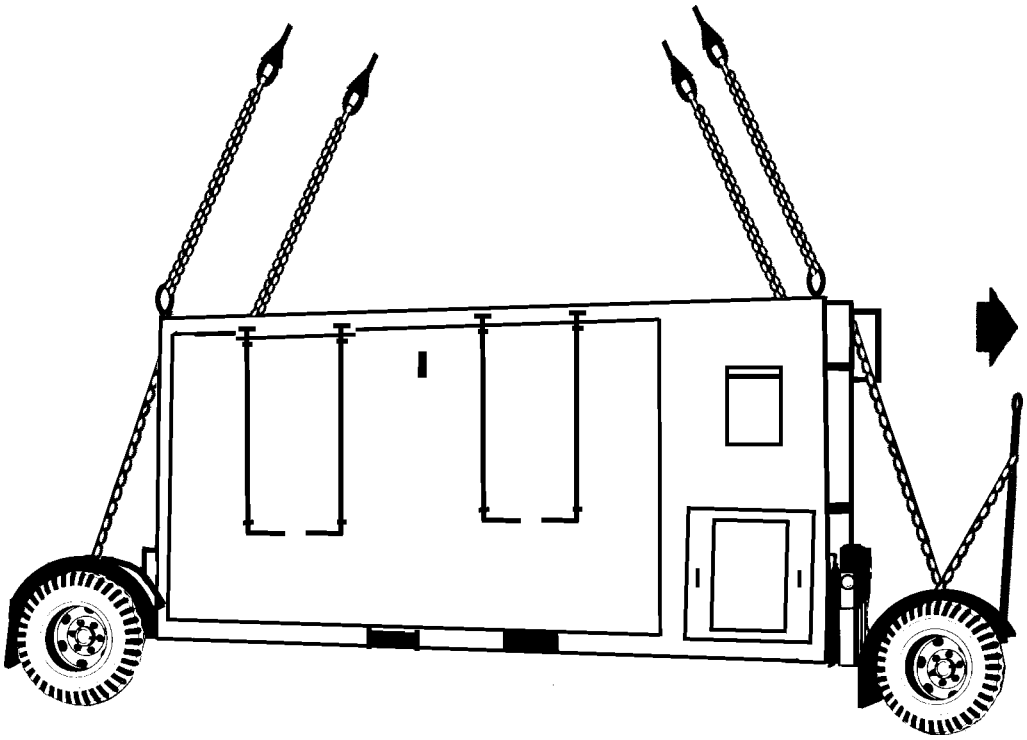

**RIGGING STEPS**

**1.** Position the apex fitting on top of the shelter. Route outer sling legs 1 and 2 to the front of the shelter (lunette end) and inner sling legs 3 and 4 to the rear. Sling legs 1 and 3 must be on the left side of the load.

**2.** Loop the chain end of sling leg 1 through the left front lift provision located on the top left front corner of the shelter (lunette end) . Place the correct link from Table 3-30 in the grab hook. Repeat with sling leg 2 through the top right front lift provision.

**3.** Loop the chain end of sling leg 3 through the left rear lift provision located on the top left rear corner of the shelter. Place the correct link from Table 3-30 in the grab hook. Repeat with sling leg 4 through the top right rear lift provision.

**4.** Secure all excess chain with tape or Type III nylon cord.

**5.** Cluster and tie or tape (breakaway technique) the sling legs in each sling set together to prevent entanglement during hookup and lift-off.

*Figure 3-30. Assault Command Post With High Mobility Wheel Set*

# CHAPTER 4

# CERTIFIED SINGLE-POINT RIGGING PROCEDURES FOR TRAILERS WITH MOUNTED GENERATORS

## 4-1. INTRODUCTION

This chapter contains rigging procedures for single-point trailer loads that have been certified for sling load. Each rigging procedure is found in a paragraph that includes a description of the load, materials required for rigging, and steps to complete the procedure. An applicability paragraph is also a part of each paragraph and identifies the certified loads. The certified single-point rigging procedures for trailers are in this section. Paragraphs 4-2 through 4-10 give detailed instructions for rigging loads.

**NOTE: Reach Pendants may be used on all single point loads. A static discharge person is not required when using a Reach Pendant.**

## 4-2. M353 Trailer Chassis with Mounted Generators

**a. Applicability.** The following items in Table 4-1 are certified for all helicopters with suitable lift capacity by the US Army Natick Research, Development, and Engineering Center:

**Table 4-1. M353 Trailer Chassis with Mounted Generators**

| NOMENCLATURE | MAX WEIGHT (POUNDS) | SLING SET | LINK COUNT FRONT/REAR | RECOMMENDED AIRSPEED (KNOTS) |
|---|---|---|---|---|
| M353 Trailer Chassis | 2,720 | 10K | 20/3 | 100 |
| MEP-005A | 6,220 | 10K | 20/3 | 100 |
| MEP-006A | 7,720 | 10K | 20/3 | 100 |
| MEP-114A | 6,220 | 10K | 20/3 | 100 |
| MEP-115A | 6,320 | 10K | 20/3 | 100 |

**b. Materials.** The following materials are required to rig this load:

**(1)** Sling set (10,000-pound capacity).

**(2)** Tape, adhesive, pressure-sensitive, 2-inch wide roll.

**(3)** Cord, nylon, Type III, 550-pound breaking strength.

**(4)** Webbing, cotton, 1/4-inch, 80-pound breaking strength.

**c. Personnel.** Two persons can prepare and rig this load in 10 minutes.

**d. Procedures.** The following procedures apply to this load:

**(1) Preparation.** Prepare the load using the following steps:

**(a)** Engage both hand brakes.

**(b)** Secure safety chains and brake hoses to the top of the drawbar with Type III nylon cord.

**(c)** Secure all lids, doors, and caps with tape or Type III nylon cord.

**(2) Rigging.** Rig the load according to the steps in Figure 4-1.

**(3) Hookup.** The hookup team stands on top of the generator. The static wand person discharges the static electricity with the static wand. The hookup person places the apex fitting onto the aircraft cargo hook. The hookup team then carefully dismounts the trailer and remains close to the load as the helicopter removes slack from the sling legs. When successful hookup is assured, the hookup team quickly exits the area underneath the helicopter to the designated rendezvous point.

**(4) Derigging.** Derigging is the reverse of the preparation and rigging procedures in steps d (1) and d (2).

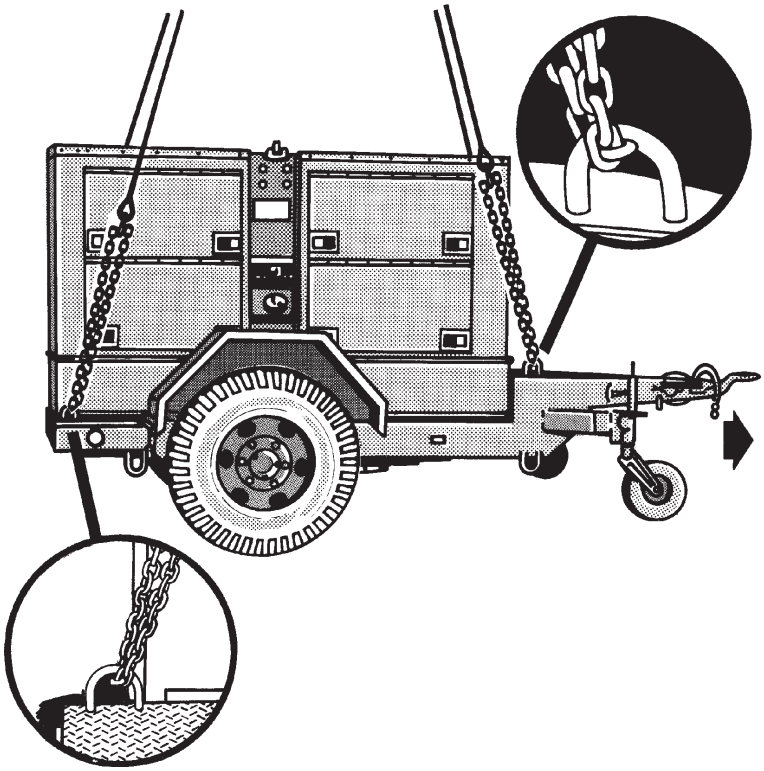

**RIGGING STEPS**

**1.** Position apex fitting on top of the generator. Route outer sling legs 1and 2 to the front of the trailer (lunette end) and inner sling legs 3 and 4 to the rear. Sling legs 1 and 3 must be on the left side of the load.

**2.** Loop the chain end of sling leg 1 through the left front lift provision located on the front of the trailer frame. Place the correct link from Table 4-1 in the grab hook. Repeat with sling leg 2 through the right side, front lift provision. Secure the excess chain with Type III nylon cord.

**3.** Route the chain end of sling leg 3 through the left rear lift provision located on the rear of the trailer frame. Place the correct link from Table 4-1 in the grab hook. Repeat with sling leg 4 through the right rear lift provision.

**4.** Cluster and tie or tape (breakaway technique) all sling legs together on top of the roof to prevent entanglement during hookup and lift-off.

*Figure 4-1. M353 Trailer Chassis with Mounted Generators*

## 4-3. M200A1 Trailer-Mounted Power Units, Generators, and Power Plants

**a. Applicability.** The following items in Table 4-2 are certified for all helicopters with suitable lift capacity by the US Army Natick Research, Development, and Engineering Center:

**Table 4-2. M200A1 Trailer-Mounted Power Units, Generators, and Power Plants**

| NOMENCLATURE | MAX WEIGHT (POUNDS) | SLING SET | LINK COUNT FRONT/REAR | RECOMMENDED AIRSPEED (KNOTS) |
|---|---|---|---|---|
| Generator set, 15 kW, 6113 | 5,119 | 10K | 3/23 | 100 |
| Generator set, 30 kW, CE301ACWK1 | 5,625 | 10K | 3/28 | 100 |
| Generator set, 45 kW, 52300 | 6,885 | 10K | 3/30 | 100 |
| Generator set, 60 kW, MEP-006A | 7,347 | 10K | 3/33 | 100 |
| AN/MJQ-12A, Unit A, 60 kW, 50/60 Hz Power Unit with MEP 006A, 60 kW, 50/60 Hz, generator set with switch box | 8,060 | 10K | 10/3 | 90 |
| AN/MJQ-12A, Unit B, 60 kW, 50/60 Hz Power Unit with MEP 806A, 60 kW, 50/60 Hz, generator set (no switch box) | 7,980 | 10K | 10/3 | 90 |
| AN/MJQ-39, Unit A, 15 kW, 400 Hz Power Unit with MEP 814A, 15 kW, 400 Hz, generator set with switch box | 5,255 | 10K | 3/3 | 80 |
| AN/MJQ-39, Unit B, 15 kW, 400 Hz Power Unit with MEP 814A, 15 kW, 400 Hz, generator set (no switch box) | 5,255 | 10K | 3/3 | 80 |
| AN/MJQ-40, Unit A, 30 kW, 50/60 Hz Power Unit with MEP 805A, 30 kW, 50/60 Hz, generator set with switch box | 6,100 | 10K | 3/3 | 90 |
| AN/MJQ-40, Unit B, 30 kW, 50/60 Hz Power Unit with MEP 805A, 30 kW, 50/60 Hz, generator set (no switch box) | 6,100 | 10K | 3/3 | 90 |

**Table 4-2. M200A1 Trailer-Mounted Power Units, Generators, and Power Plants (continued)**

| NOMENCLATURE | MAX WEIGHT (POUNDS) | SLING SET | LINK COUNT FRONT/REAR | RECOMMENDED AIRSPEED (KNOTS) |
|---|---|---|---|---|
| AN/MJQ-41, Unit A, 60 kW, 50/60 Hz Power Unit with MEP 806A, 60 kW, 50/60 Hz, generator set with switch box | 6,720 | 10K | 3/3 | 70 |
| AN/MJQ-41, Unit B, 60 kW, 50/60 Hz Power Unit with MEP 806A, 60 kW, 50/60 Hz, generator set (no switch box) | 6,720 | 10K | 3/3 | 70 |
| PU-405 A/M Power Unit, 15 kW, without acoustic suppression kit (ASK) | 6,119 | 10K | 3/33 | 100 |
| PU-405 A/M Power Unit, 15 kW, with acoustic suppression kit (ASK) | 6,740 | 10K | 3/28 | 80 |
| PU-406 B/M Power Unit, 30 kW, with acoustic suppression kit (ASK) | 7,520 | 10K | 3/28 | 80 |
| PU-650 B/G, 60 kW , 50/60 Hz Power Unit with MEP 006A, 60 kW, 50/60 Hz generator set | 7,800 | 10K | 10/3 | 90 |
| PU-707 A/M, 60 kW , 400 Hz Power Unit with MEP 115A, 60 kW, 400 Hz generator set | 7,800 | 10K | 10/3 | 90 |
| PU-732 Power Unit, 15 kW, with acoustic suppression kit (ASK) | 6,690 | 10K | 3/28 | 80 |
| PU-760 Power Unit, 30 kW, with acoustic suppression kit (ASK) | 7,240 | 10K | 3/28 | 80 |
| PU-800, 15 kW, 400 Hz Power Unit with MEP 814A, 15 kW, 400 Hz, generator set | 5,255 | 10K | 3/3 | 80 |
| PU-802, 15 kW, 50/60 Hz Power Unit with MEP 804A, 15 kW, 50/60 Hz, generator set | 5,320 | 10K | 3/3 | 80 |
| PU-803, 30 kW, 50/60 Hz Power Unit with MEP 805A, 30 kW, 50/60 Hz, generator set | 6,100 | 10K | 3/3 | 90 |

**Table 4-2. M200A1 Trailer-Mounted Power Units, Generators, and Power Plants (continued)**

| NOMENCLATURE | MAX WEIGHT (POUNDS) | SLING SET | LINK COUNT FRONT/REAR | RECOMMENDED AIRSPEED (KNOTS) |
|---|---|---|---|---|
| PU-804, 30 kW, 400 Hz Power Unit with MEP 815A, 30 kW, 400 Hz, generator set | 6,130 | 10K | 3/3 | 90 |
| PU-805, 60 kW, 50/60 Hz Power Unit with MEP 806A, 60 kW, 50/60 Hz, generator set | 7,120 | 10K | 3/3 | 70 |
| PU-806, 60 kW, 400 Hz Power Unit with MEP 816A, 60 kW, 400 Hz, generator set | 7,215 | 10K | 3/3 | 70 |
| PU-794/G Regency Net Power Unit | 6,600 | 10K | 3/18 | 90 |

**b. Materials.** The following materials are required to rig this load:

**(1)** Sling set (10,000-pound capacity).

**(2)** Tape, adhesive, pressure-sensitive, 2-inch wide roll.

**(3)** Cord, nylon, Type III, 550-pound breaking strength.

**(4)** Webbing, cotton, 1/4-inch, 80-pound breaking strength.

**(5)** Felt sheet, cattle hair, Type IV, 1/2-inch or suitable substitute.

**(6)** Tie-down strap, CGU/1B (as required).

**c. Personnel.** Two persons can prepare and rig this load in 15 minutes.

**d. Procedures.** The following procedures apply to this load:

**(1) Preparation.** Prepare the load using the following steps:

**(a)** Lower the lunette as far as possible.

**(b)** Engage both hand brakes.

**(c)** Secure safety chains and brake hoses to the top of the drawbar with Type III nylon cord.

**(d)** Secure all lids, doors, and caps with tape or type III nylon cord.

**(e)** Secure the fire extinguisher (if installed) with Type III nylon cord.

**(f)** Secure the landing legs in the up position with the safety pins. Secure the safety pins with tape.

**(g)** Place additional cargo as close to the center of the trailer as possible. The cargo must not contact the sling legs during lift-off or flight.

**NOTE: The load must not weigh more than the maximum allowable weight during sling load operations.**

**(2) Rigging.** Rig the load according to the steps in Figure 4-2.

**(3) Hookup.** The hookup team stands on top of the generator. The static wand person discharges the static electricity with the static wand. The hookup person places the apex fitting onto the aircraft cargo hook. The hookup team then carefully dismounts the trailer and remains close to the load as the helicopter removes slack from the sling legs. When successful hookup is assured, the hookup team quickly exits the area underneath the helicopter to the designated rendezvous point.

**(4) Derigging.** Derigging is the reverse of the preparation and rigging procedures in steps d (1) and d (2).

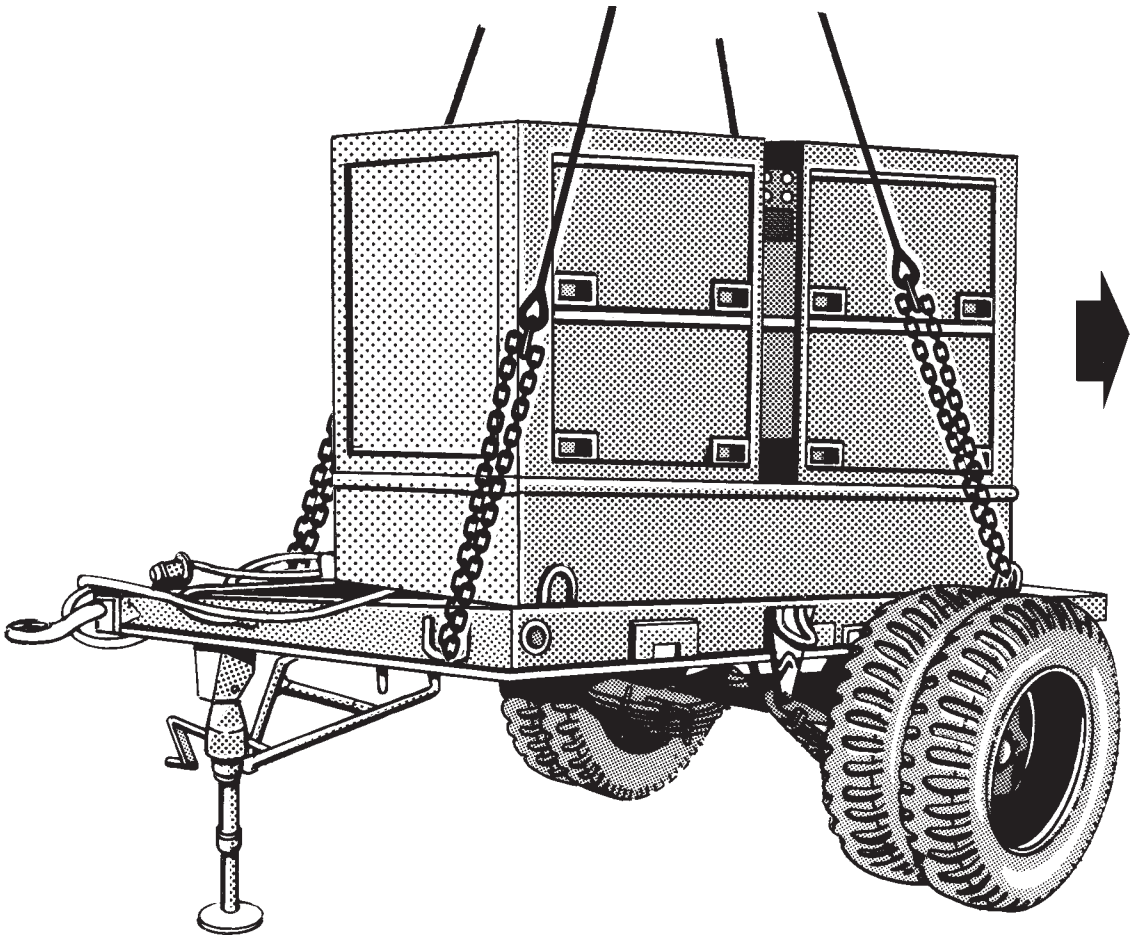

**RIGGING STEPS**

**1.** Position apex fitting on top of the generator. Route outer sling legs 1and 2 to the front of the trailer (lunette end) and inner sling legs 3 and 4 to the rear. Sling legs 1 and 3 must be on the left side of the load.

**2.** Loop the chain end of sling leg 1 through the left front lift provision located on the front of the trailer frame. Place the correct link from Table 4-2 in the grab hook. Repeat with sling leg 2 through the right side, front lift provision. Secure the excess chain with Type III nylon cord.

**3.** Route the chain end of sling leg 3 through the left rear lift provision located on the rear of the trailer frame. Place the correct link from Table 4-2 in the grab hook. Repeat with sling leg 4 through the right rear lift provision.

**4.** Cluster and tie or tape (breakaway technique) all sling legs together on top of the roof to prevent entanglement during hookup and lift-off.

*Figure 4-2. M200A1 Trailer-Mounted Power Units, Generators, and Power Plants*

## 4-4. M103A3 Trailer-Mounted Power Units, Generators, and Power Plants

**a. Applicability.** The following items in Table 4-3 are certified for all helicopters with suitable lift capacity by the US Army Natick Research, Development, and Engineering Center:

**Table 4-3. M103A3 Trailer-Mounted Power Units, Generators, and Power Plants**

| NOMENCLATURE | MAX WEIGHT (POUNDS) | SLING SET | LINK COUNT FRONT/REAR | RECOMMENDED AIRSPEED (KNOTS) |
|---|---|---|---|---|
| AN/MJQ-16 Power Unit, 5 kW, 60 Hz | 5,100 | 10K | 5/10 | 120 |
| AN/MJQ-18 Power Unit, 10 kW, 60 Hz | 5765 | 10K | 5/10 | 120 |
| AN/MJQ-25 Power Unit, 10 kW, 400 Hz | 5750 | 10K | 5/10 | 120 |

**b. Materials.** The following materials are required to rig this load:

**(1)** Sling set (10,000-pound capacity).

**(2)** Tape, adhesive, pressure-sensitive, 2-inch wide roll.

**(3)** Cord, nylon, Type III, 550-pound breaking strength.

**(4)** Webbing, cotton, 1/4-inch, 80-pound breaking strength.

**(5)** Felt sheet, cattle hair, Type IV, 1/2-inch or suitable substitute.

**(6)** Tie-down strap, CGU/1B (as required).

**c. Personnel.** Two persons can prepare and rig this load in 15 minutes.

**d. Procedures.** The following procedures apply to this load:

**(1) Preparation.** Prepare the load using the following steps:

**(a)** Remove the canvas top and bows. Secure the top and bows on the generator trailer or coordinate the transportation for the canvas top and bows.

**(b)** Ensure the fuel tank is less than 3/4 full.

**(c)** Engage both hand brakes.

**(d)** Secure safety chains and brake hoses to the top of the drawbar with Type III nylon cord.

**(e)** Secure all lids, doors, and caps with tape or Type III nylon cord.

**(2) Rigging.** Rig the load according to the steps in Figure 4-3.

**(3) Hookup.** The hookup person stands on top of the generator. The static wand person stands on the wheel well. The static wand person discharges the static electricity with the static wand. The hookup person places the apex fitting onto the aircraft cargo hook. The hookup team then carefully dismounts the trailer and remains close to the load as the helicopter removes slack from the sling legs. When successful hookup is assured, the hookup team quickly exits the area underneath the helicopter to the designated rendezvous point.

**(4) Derigging.** Derigging is the reverse of the preparation and rigging procedures in steps d (1) and d (2).

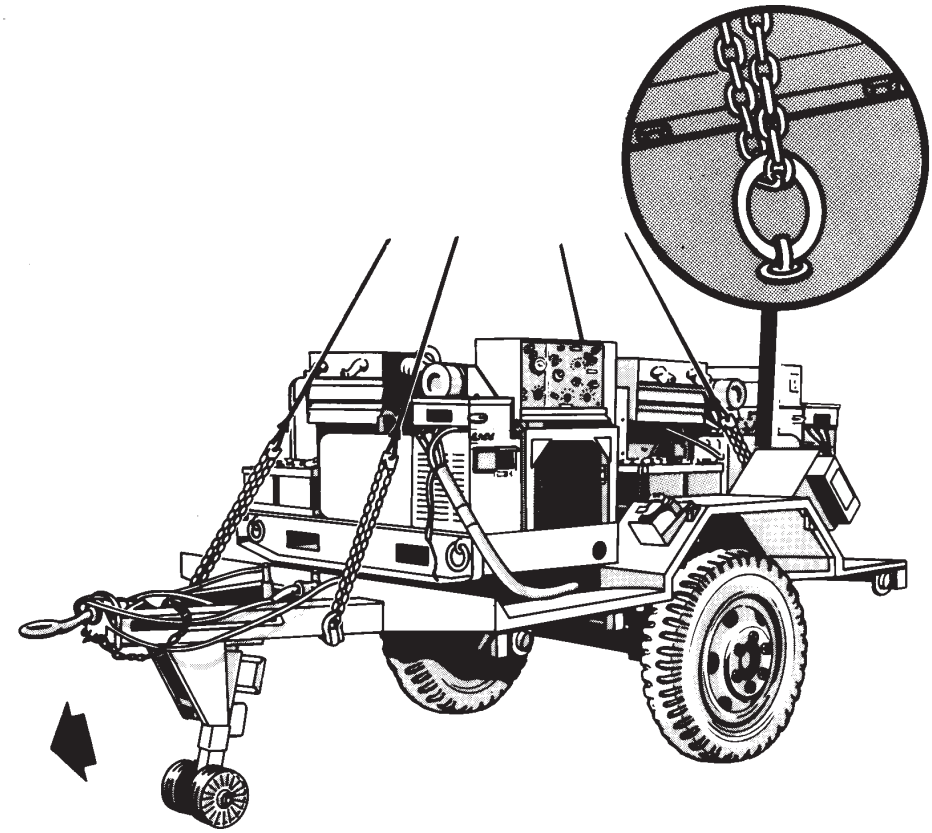

**RIGGING STEPS**

**1.** Position apex fitting on top of the generator. Route outer sling legs 1and 2 to the front of the trailer (lunette end) and inner sling legs 3 and 4 to the rear. Sling legs 1 and 3 must be on the left side of the load.

**2.** Loop the chain end of sling leg 1 through the left front lift provision located on the outboard side of the trailer A-frame. Place the correct link from Table 4-3 in the grab hook. Repeat with sling leg 2 through the right side, front lift provision. Secure the excess chain with Type III nylon cord.

**3.** Route the chain end of sling leg 3 through the left rear lift ring located on the trailer deck aft of the wheel well. Place the correct link from Table 4-3 in the grab hook. Repeat with sling leg 4 through the right rear lift provision.

**4.** Secure the rear lift provisions in the up position to the generator tiedown provisions with Type III nylon cord.

**5.** Pad the slings in the areas where they contact the generators.

**6.** Cluster and tie or tape (breakaway technique) the front sling legs together to prevent entanglement during hookup and lift-off. Repeat the procedure for the rear sling legs.

*Figure 4-3. M103A3 Trailer-Mounted Power Units, Generators, and Power Plants*

## 4-5. M103A3/A4 Trailer-Mounted Power Units, Generators, and Power Plants

**a. Applicability.** The following items in Table 4-4 are certified for all helicopters with suitable lift capacity by the US Army Natick Research, Development, and Engineering Center:

**Table 4-4. M103A3/A4 Trailer-Mounted Power Units, Generators, and Power Plants**

| NOMENCLATURE | MAX WEIGHT (POUNDS) | SLING SET | LINK COUNT FRONT/REAR | RECOMMENDED AIRSPEED (KNOTS) |
|---|---|---|---|---|
| AN/MJQ-37 Power Unit with two (2) MEP-803A, 10 kW, 60 Hz, generator sets | 4,735 | 10K | 15/3 | 90 |
| AN/MJQ-38 Power Unit with two (2) MEP-813A, 10 kW, 400 Hz, generator sets | 4,735 | 10K | 15/3 | 90 |

**b. Materials.** The following materials are required to rig this load:

**(1)** Sling set (10,000-pound capacity).

**(2)** Tape, adhesive, pressure-sensitive, 2-inch wide roll.

**(3)** Cord, nylon, Type III, 550-pound breaking strength.

**(4)** Webbing, cotton, 1/4-inch, 80-pound breaking strength.

**(5)** Felt sheet, cattle hair, Type IV, 1/2-inch or suitable substitute.

**(6)** Tie-down strap, CGU/1B (as required).

**c. Personnel.** Two persons can prepare and rig this load in 15 minutes.

**d. Procedures.** The following procedures apply to this load:

**(1) Preparation.** Prepare the load using the following steps:

**(a)** Engage both hand brakes.

**(b)** Secure safety chains and brake hoses to the top of the drawbar with Type III nylon cord.

**(c)** Secure all lids, doors, and caps with tape or type III nylon cord.

**(d)** Ensure the rear lift provisions, located on the rear of the trailer frame, are free to rotate. Secure the pins with tape.

**(e)** Place additional cargo as close to the center of the trailer as possible. The cargo must not contact the sling legs during lift-off or flight.

**(2) Rigging.** Rig the load according to the steps in Figure 4-4.

**(3) Hookup.** The hookup person stands on top of the generator. The static wand person stands on the wheel well. The static wand person discharges the static electricity with the static wand. The hookup person places the apex fitting onto the aircraft cargo hook. The hookup team then carefully dismounts the trailer and remains close to the load as the helicopter removes slack from the sling legs. When successful hookup is assured, the hookup team quickly exits the area underneath the helicopter to the designated rendezvous point.

**(4) Derigging.** Derigging is the reverse of the preparation and rigging procedures in steps d (1) and d (2).

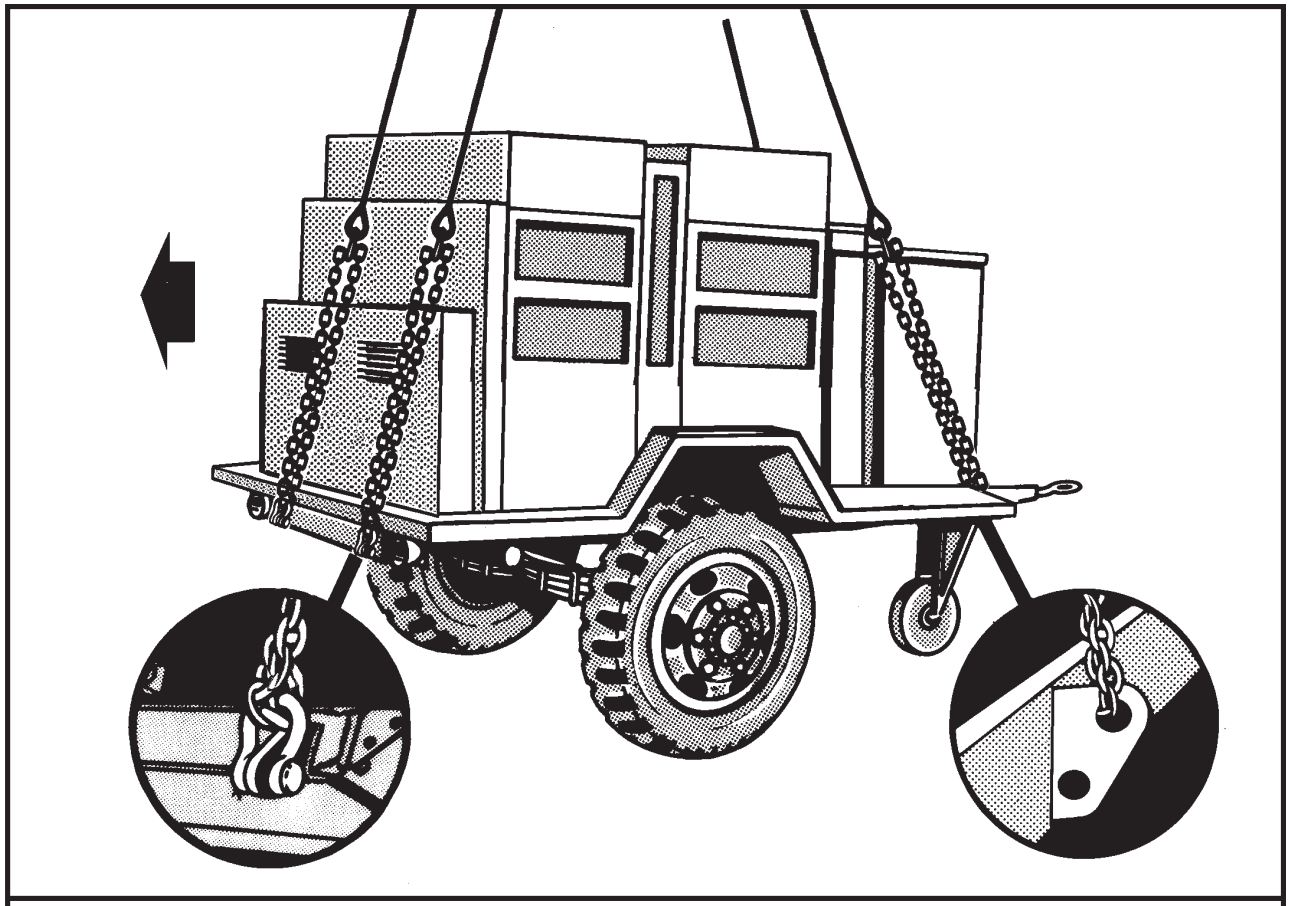

**RIGGING STEPS**

**1.** Position apex fitting on top of the generator. Route outer sling legs 1and 2 to the front of the trailer (lunette end) and inner sling legs 3 and 4 to the rear. Sling legs 1 and 3 must be on the left side of the load.

**2.** Loop the chain end of sling leg 1 through the left front lift provision located on the left side of the trailer A-frame. Place the correct link from Table 4-4 in the grab hook. Repeat with sling leg 2 through the right side, front lift provision. Secure the excess chain with Type III nylon cord.

**3.** Route the chain end of sling leg 3 through the left rear lift provision located on the rear of the trailer frame. Place the correct link from Table 4-4 in the grab hook. Repeat with sling leg 4 through the right rear lift provision.

**4.** Secure the rear lift provisions in the up position to the generator tiedown provisions with Type III nylon cord.

**5.** Raise the apex fitting above the generators and route the rear slings to the side of the rear generator.

**6.** Pad the slings in the areas where they contact the generators.

**7.** Cluster and tie or tape (breakaway technique) the front sling legs together to prevent entanglement during hookup and lift-off. Repeat the procedure for the rear sling legs.

***Figure 4-4. M103A3/A4 Trailer-Mounted Power Units, Generators, and Power Plants***

## 4-6. M116A2 Trailer-Mounted Power Units, Generators, and Power Plants

**a. Applicability.** The following items in Table 4-5 are certified for all helicopters with suitable lift capacity by the US Army Natick Research, Development, and Engineering Center:

**Table 4-5. M116A2 Trailer-Mounted Power Units, Generators, and Power Plants**

| NOMENCLATURE | MAX WEIGHT (POUNDS) | SLING SET | LINK COUNT FRONT/REAR | RECOMMENDED AIRSPEED (KNOTS) |
|---|---|---|---|---|
| PU-751/M, 5 kW, Generator Variants:<br>LOS V1/V2/V3/V4<br>Planning Trailer<br>Radio Access Trailer | 3,000 | 10K | 3/40 | 75 |
| PU-753/M 10 kW Generator Variants:<br>NC OPS Trailer<br>SCC TECH Trailer<br>NC MGMT Trailer<br>LEN MGNT Trailer<br>LEN OPS Trailer<br>SEN V1 Trailer<br>SEN V2 Trailer<br>Maintenance #1 Trailer<br>AN/TSQ-182 | 3,000 | 10K | 3/40 | 75 |
| AN/MJQ-32 Power Unit with Acoustic Suppression Kit, 3 kW | 3,120 | 10K | 7/3 | 120 |
| AN/MJQ-33 Power Unit with Acoustic Suppression Kit, 3 kW | 2,858 | 10K | 7/3 | 100 |

**b. Materials.** The following materials are required to rig this load:

**(1)** Sling set (10,000-pound capacity).

**(2)** Tape, adhesive, pressure-sensitive, 2-inch wide roll.

**(3)** Cord, nylon, Type III, 550-pound breaking strength.

**(4)** Webbing, cotton, 1/4-inch, 80-pound breaking strength.

**(5)** Felt sheet, cattle hair, Type IV, 1/2-inch or suitable substitute.

**(6)** Tie-down strap, CGU/1B (as required).

**c. Personnel.** Two persons can prepare and rig this load in 20 minutes.

**d. Procedures.** The following procedures apply to this load:

**(1) Preparation.** Prepare the load using the following steps:

**(a)** Engage both hand brakes.

**(b)** Secure safety chains and brake hoses to the top of the drawbar with Type III nylon cord.

**(c)** Secure all lids, doors, and caps with tape or Type III nylon cord.

**(d)** Remove the tarp and bows from the trailer and secure in appropriate place on trailer. Secure the tarp and bows with tiedown straps (if required).

**(2) Rigging.** Rig the load according to the steps in Figure 4-5.

**(3) Hookup.** The hookup person stands on top of the generator. The static wand person stands on the wheel well. The static wand person discharges the static electricity with the static wand. The hookup person places the apex fitting onto the aircraft cargo hook. The hookup team then carefully dismounts the trailer and remains close to the load as the helicopter removes slack from the sling legs. When successful hookup is assured, the hookup team quickly exits the area underneath the helicopter to the designated rendezvous point.

**(4) Derigging.** Derigging is the reverse of the preparation and rigging procedures in steps d (1) and d (2).

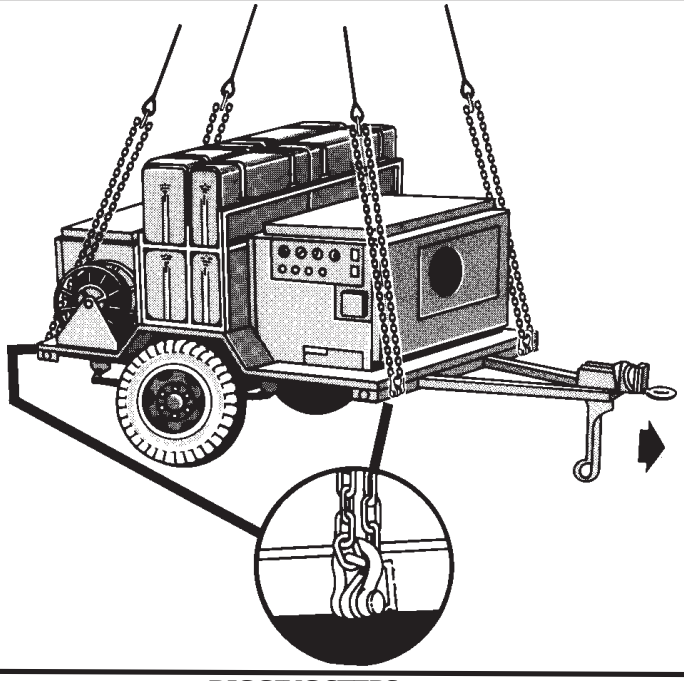

**RIGGING STEPS**

**1.** Position apex fitting on top of the generator. Route outer sling legs 1and 2 to the front of the trailer (lunette end) and inner sling legs 3 and 4 to the rear. Sling legs 1 and 3 must be on the left side of the load.

**2.** Loop the chain end of sling leg 1 through the left front lift provision located on the left front side of the trailer bed. Place the correct link from Table 4-5 in the grab hook. Repeat with sling leg 2 through the right side, front lift provision. Secure the excess chain with Type III nylon cord.

**3.** Route the chain end of sling leg 3 through the left rear lift provision located on the rear of the trailer bed. Place the correct link from Table 4-5 in the grab hook. Repeat with sling leg 4 through the right rear lift provision.

**4.** Secure the lift provisions in the up position to the generator tiedown provisions with 1/4-inch cotton webbing.

**5.** Raise the apex fitting above the generators and route the rear slings to the side of the rear generator.

**6.** Pad the slings in the areas where they contact the tool boxes or the generators.

**7.** Cluster and tie or tape (breakaway technique) the sling legs together to prevent entanglement during hookup and lift-off.

***Figure 4-5. M116A2 Trailer-Mounted Power Units, Generators, and Power Plants***

## 4-7. M116A3 Trailer-Mounted Power Units, Generators, and Power Plants

**a. Applicability.** The following items in Table 4-6 are certified for all helicopters with suitable lift capacity by the US Army Soldier Systems Center:

**Table 4-6. M116A3 Trailer-Mounted Power Units, Generators, and Power Plants**

| NOMENCLATURE | MAX WEIGHT (POUNDS) | SLING SET | LINK COUNT FRONT / REAR | RECOMMENDED AIRSPEED (KNOTS) |
|---|---|---|---|---|
| AN/MJQ-43 Power Unit with two (2) MEP-831A, 3 kW, 60 Hz, Generator Sets | 2,060 | 10K | 3/3 | 80 |
| AN/MJQ-35 Power Unit with two (2) MEP-802A, 5 kW, 60 Hz, Generator Sets | 3,160 | 10K | 3/3 | 80 |
| PU-797, 5 kW, 60 Hz, Power Unit with MEP-802A, 5 kW, 60 Hz, Generator Set | 2,720 | 10K | 3/3 | 70 |
| PU-798, 10 kW, 60 Hz, Power Unit with MEP-803A, 10 kW, 60 Hz, Generator Set | 2,860 | 10K | 3/3 | 70 |
| PU-799, 10 kW, 400 Hz, Power Unit with MEP-813A, 10 kW, 400 Hz, Generator Set | 2,870 | 10K | 3/3 | 70 |
| PU-801, 15 kW, 50/60 Hz, Power Unit with MEP-804A, 15 kW, 50/60 Hz, Generator Set | 3,160 | 10K | 15/3 | 100 |
| AN/MJQ-33 Tactical Quiet Generator (TQG) | 2,100 | 10K | 3/3 | 100 |

**b. Materials.** The following materials are required to rig this load:

**(1)** Sling set (10,000-pound capacity).

**(2)** Tape, adhesive, pressure-sensitive, 2-inch wide roll.

**(3)** Cord, nylon, Type III, 550-pound breaking strength.

**(4)** Webbing, cotton, 1/4-inch, 80-pound breaking strength.

**(5)** Felt sheet, cattle hair, Type IV, 1/2-inch or suitable substitute.

**(6)** Tie-down strap, CGU/1B (as required).

**c. Personnel.** Two persons can prepare and rig this load in 15 minutes.

**d. Procedures.** The following procedures apply to this load:

**(1) Preparation.** Prepare the load using the following steps:

**(a)** Engage both hand brakes.

**(b)** Secure safety chains and brake hoses to the top of the drawbar with Type III nylon cord.

**(c)** Secure all lids, doors, and caps with tape or Type III nylon cord.

**(d)** Place additional cargo as close to the center of the trailer as possible. Secure the cargo with CGU-1/B tiedown straps. The cargo must not contact the sling legs during lift-off or flight.

**(2) Rigging.** Rig the load according to the steps in Figure 4-6.

**(3) Hookup.** The hookup person stands on top of the generator. The static wand person stands on the wheel well. The static wand person discharges the static electricity with the static wand. The hookup person places the apex fitting onto the aircraft cargo hook. The hookup team then carefully dismounts the trailer and remains close to the load as the helicopter removes slack from the sling legs. When successful hookup is assured, the hookup team quickly exits the area underneath the helicopter to the designated rendezvous point.

**(4) Derigging.** Derigging is the reverse of the preparation and rigging procedures in steps d (1) and d (2).

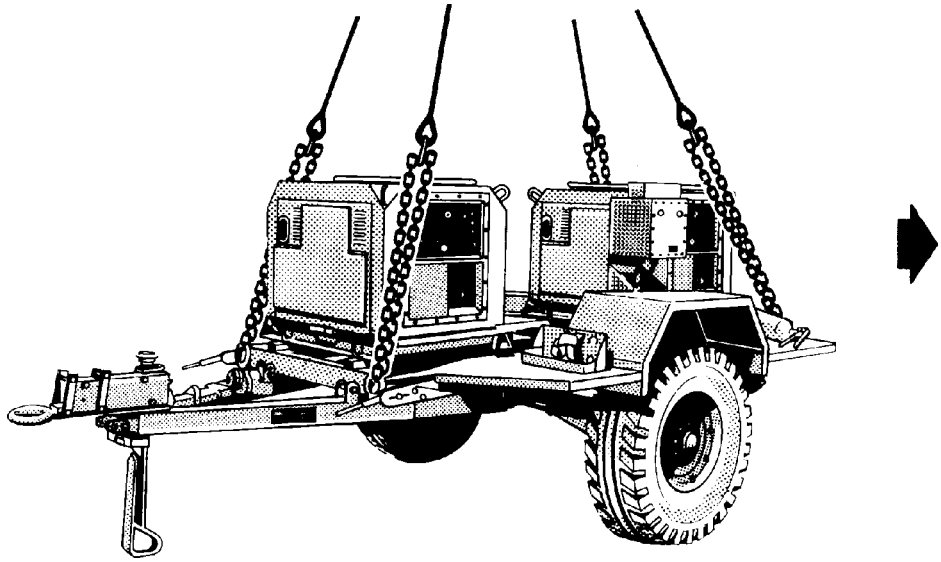

**RIGGING STEPS**

**CAUTION**
**DO NOT ADD CARGO TO THE PU-801 GENERATOR SET**

**1.** Position apex fitting on top of the generator. Route outer sling legs 1and 2 to the front of the trailer (lunette end) and inner sling legs 3 and 4 to the rear. Sling legs 1 and 3 must be on the left side of the load.

**2.** Loop the chain end of sling leg 1 through the left front lift provision located on the left front side of the trailer bed. Place the correct link from Table 4-6 in the grab hook. Repeat with sling leg 2 through the right side, front lift provision. Secure the excess chain with Type III nylon cord.

**3.** Route the chain end of sling leg 3 through the left rear lift provision located on the rear of the trailer bed. Place the correct link from Table 4-6 in the grab hook. Repeat with sling leg 4 through the right rear lift provision.

**4.** Secure the lift provisions in the up position to the generator tiedown provisions with 1/4-inch cotton webbing.

**5.** Raise the apex fitting above the generators and route the rear slings to the side of the rear generator.

**6.** Pad the slings in the areas where they contact the tool boxes or the generators.

**7.** Cluster and tie or tape (breakaway technique) the front sling legs together to prevent entanglement during hookup and lift-off. Repeat the procedure for the rear sling legs.

*Figure 4-6. M116A3 Trailer Mounted Power Units, Generators, and Power Plants*

## 4-8. High Mobility Trailer (HMT) with AN/MJQ-35A Power Plant

**a. Applicability.** The following item in Table 4-7 is certified for all helicopters with suitable lift capacity by the US Army Natick Research, Development, and Engineering Center:

**Table 4-7. High Mobility Trailer (HMT) with AN/MJQ-35A Power Plant**

| NOMENCLATURE | MAX WEIGHT (POUNDS) | SLING SET | LINK COUNT FRONT/REAR | RECOMMENDED AIRSPEED (KNOTS) |
|---|---|---|---|---|
| AN/TMQ-35A, 5 kW, 60 Hz, Power Plant | 3,540 | 10K | 20/3 | 80 |

**b. Materials.** The following materials are required to rig this load:

**(1)** Sling set (10,000-pound capacity).

**(2)** Tape, adhesive, pressure-sensitive, 2-inch wide roll.

**(3)** Cord, nylon, Type III, 550-pound breaking strength.

**(4)** Webbing, cotton, 1/4-inch, 80-pound breaking strength.

**(5)** Felt sheet, cattle hair, Type IV, 1/2-inch or suitable substitute.

**(6)** Tie-down strap, CGU/1B (as required).

**c. Personnel.** Two persons can prepare and rig this load in 10 minutes.

**d. Procedures.** The following procedures apply to this load:

**(1) Preparation.** Prepare the load using the following steps:

**(a)** Engage the parking brake.

**(b)** Secure safety chains and brake hoses to the top of the drawbar with Type III nylon cord.

**(c)** Secure all lids, doors, and caps with tape or type III nylon cord.

**(d)** Place additional cargo on the trailer bed and secure the cargo with CGU-1/B tiedown straps.

**(e)** Install the rear stabilizer legs with the lower support section fully retracted.

**(f)** Lower the front jack so the lunette is close to the ground.

**(2) Rigging.** Rig the load according to the steps in Figure 4-7.

**(3) Hookup.** The hookup team stands on the drawbar or the bed of the trailer. The static wand person discharges the static electricity with the static wand. The hookup person places the apex fitting onto the aircraft cargo hook. The hookup team then carefully dismounts the trailer on the lunette end of the trailer and remains close to the load as the helicopter removes slack from the sling legs. When successful hookup is assured, the hookup team quickly exits the area underneath the helicopter to the designated rendezvous point.

**(4) Derigging.** Derigging is the reverse of the preparation and rigging procedures in steps d (1) and d (2).

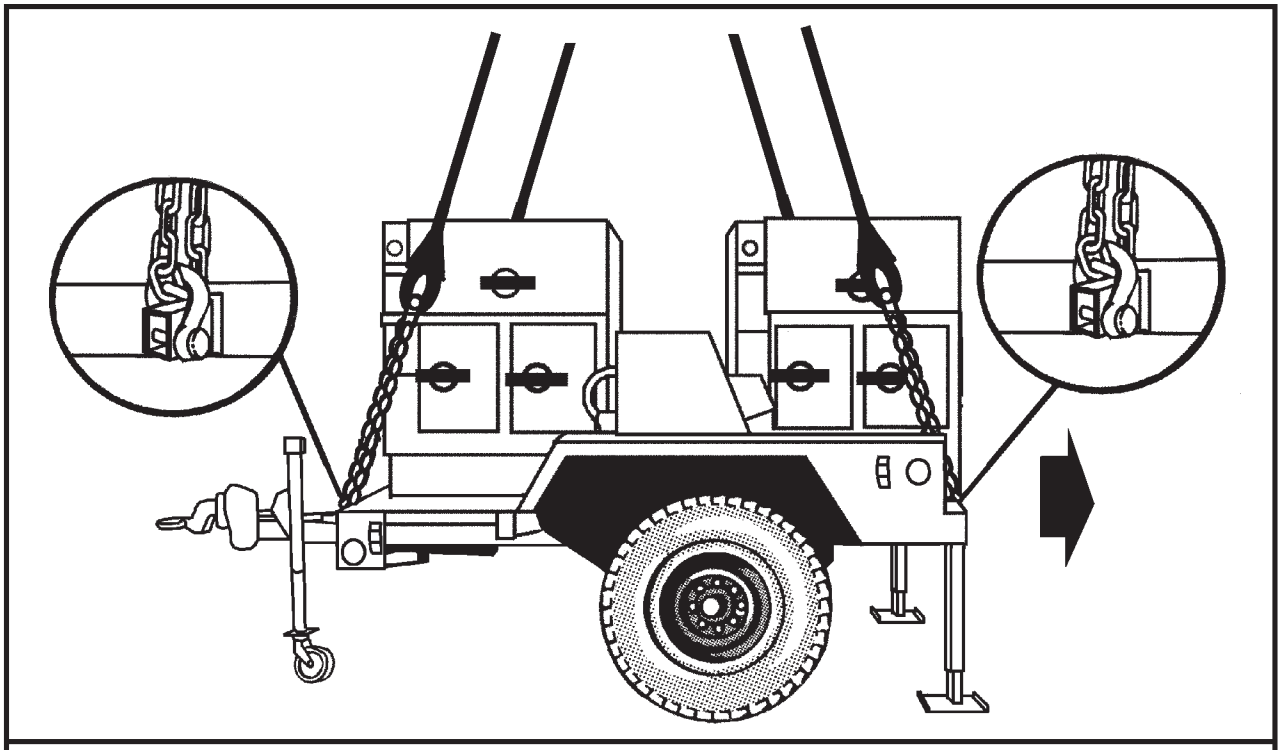

**RIGGING STEPS**

**1.** Position apex fitting on top of the generator. Route outer sling legs 1and 2 to the front of the trailer (lunette end) and inner sling legs 3 and 4 to the rear. Sling legs 1 and 3 must be on the left side of the load.

**2.** Loop the chain end of sling leg 1 through the left front lift provision located on the left front side of the trailer bed. Place the correct link from Table 4-7 in the grab hook. Repeat with sling leg 2 through the right side, front lift provision. Secure the excess chain with Type III nylon cord.

**3.** Route the chain end of sling leg 3 through the left rear lift provision located on the rear of the trailer bed. Place the correct link from Table 4-7 in the grab hook. Repeat with sling leg 4 through the right rear lift provision.

**4.** Pad the slings in the areas where they contact the tool boxes or the generators.

**5.** Cluster and tie or tape (breakaway technique) the front sling legs together to prevent entanglement during hookup and lift-off. Repeat the procedure for the rear sling legs.

***Figure 4-7. High Mobility Trailer (HMT) with AN/MJQ-35A Power Plant***

## 4-9. High Mobility Trailer (HMT) with Tactical Quiet Generator Power Units

**a. Applicability.** The following items in Table 4-8 are certified for all helicopters with suitable lift capacity by the US Army Natick Research, Development, and Engineering Center:

**Table 4-8. High Mobility Trailer (HMT) with Tactical Quiet Generator Power Units**

| NOMENCLATURE | MAX WEIGHT (POUNDS) | SLING SET | LINK COUNT FRONT/REAR | RECOMMENDED AIRSPEED (KNOTS) |
|---|---|---|---|---|
| PU-797A 5 kW, 60 Hz, Power Unit with MEP 802A generator set | 2,657 | 10K | 3/15 | 70 |
| PU-798A 10 kW, 60 Hz, Power Unit with MEP 803A generator set | 2,880 | 10K | 3/15 | 70 |
| PU-799A 10 kW, 400 Hz, Power Unit with MEP 813A generator set | 2,910 | 10K | 3/15 | 70 |
| PU-801A 15 kW, 60 Hz, Power Unit with MEP 804A generator set | 3,800 | 10K | 3/3 | 100 |

**b. Materials.** The following materials are required to rig this load:

**(1)** Sling set (10,000-pound capacity).

**(2)** Tape, adhesive, pressure-sensitive, 2-inch wide roll.

**(3)** Cord, nylon, Type III, 550-pound breaking strength.

**(4)** Webbing, cotton, 1/4-inch, 80-pound breaking strength.

**(5)** Felt sheet, cattle hair, Type IV, 1/2-inch or suitable substitute.

**(6)** Tie-down strap, CGU/1B (as required).

**c. Personnel.** Two persons can prepare and rig this load in 10 minutes.

**d. Procedures.** The following procedures apply to this load:

**(1) Preparation.** Prepare the load using the following steps:

**(a)** Engage the parking brake.

**(b)** Secure safety chains and brake hoses to the top of the drawbar with Type III nylon cord.

**(c)** Secure all lids, doors, and caps with tape or Type III nylon cord.

**(d)** Place additional cargo on the trailer bed and secure the cargo with CGU-1/B tiedown straps.

**(e)** Install the rear stabilizer legs with the lower support section fully retracted.

**(f)** Lower the front jack so the lunette is close to the ground.

**(g)** Secure the four lift rings on the trailer in the up position to a convenient point on the load with 1/4-inch cotton webbing.

**(2) Rigging.** Rig the load according to the steps in Figure 4-8.

**CAUTION**

**The routing of the sling legs is reversed from the standard routing found in this manual. Sling legs 1 and 2 are routed to the rear of the trailer to increase the clearance between the sling legs and the generator.**

**(3) Hookup.** The hookup team stands on the drawbar or the bed of the trailer. The static wand person discharges the static electricity with the static wand. The hookup person places the apex fitting onto the aircraft cargo hook. The hookup team then carefully dismounts the trailer on the lunette end of the trailer and remains close to the load as the helicopter removes slack from the sling legs. When successful hookup is assured, the hookup team quickly exits the area underneath the helicopter to the designated rendezvous point.

**(4) Derigging.** Derigging is the reverse of the preparation and rigging procedures in steps d (1) and d (2).

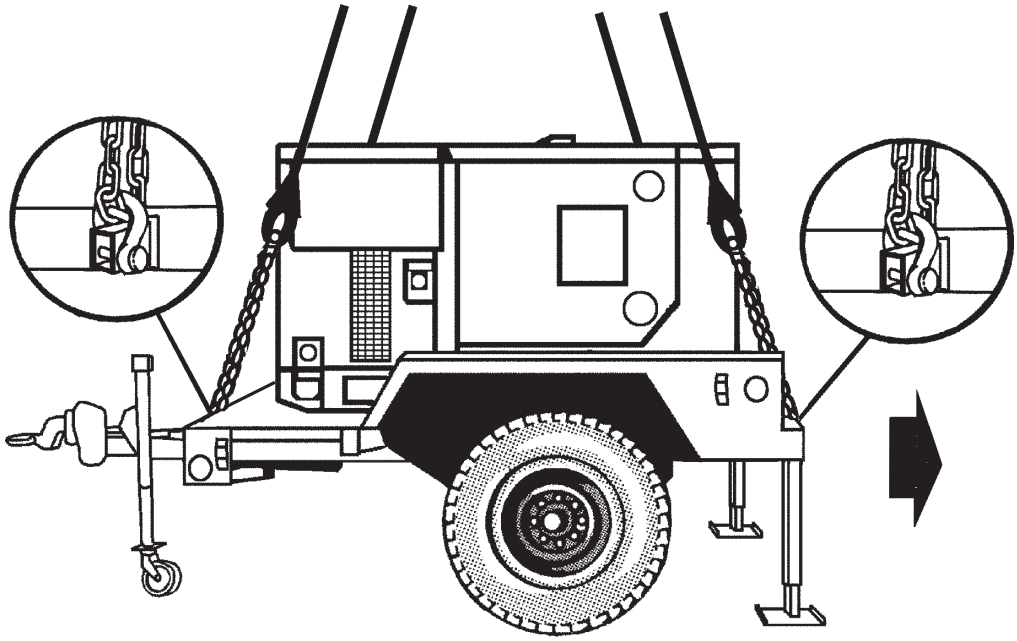

**RIGGING STEPS**

**1.** Position apex fitting on top of the generator. Route outer sling legs 1and 2 to the rear of the trailer and inner sling legs 3 and 4 to the front (lunette end). Sling legs 1 and 3 must be on the left side of the load.

**2.** Loop the chain end of sling leg 1 through the left rear lift provision located on the left rear side of the trailer bed. Place the correct link from Table 4-8 in the grab hook. Repeat with sling leg 2 through the right rear lift provision. Secure the excess chain with Type III nylon cord.

**3.** Route the chain end of sling leg 3 through the left front lift provision located on the front of the trailer bed. Place the correct link from Table 4-8 in the grab hook. Repeat with sling leg 4 through the right front lift provision.

**4.** Pad the slings in the areas where they contact the tool boxes or the generators.

**5.** Cluster and tie or tape (breakaway technique) the sling legs together on top of the generator to prevent entanglement during hookup and lift-off.

*Figure 4-8. High Mobility Trailer (HMT) with Tactical Quiet Generator Power Units*

## 4-10. High Mobility Trailers (HMT) with Generator For Joint Surveillance Target Attack Radar (JSTAR) System

**a. Applicability.** The following items in Table 4-9 are certified for all helicopters with suitable lift capacity by the US Army Natick Research, Development, and Engineering Center:

**Table 4-9. High Mobility Trailers (HMT) with Generator (JSTAR)**

| NOMENCLATURE | MAX WEIGHT (POUNDS) | SLING SET | LINK COUNT FRONT/REAR | RECOMMENDED AIRSPEED (KNOTS) |
|---|---|---|---|---|
| Mission Trailer, W/O Transit Cases | 3,960 | 10K | 10/3 | 90 |
| Support Trailer, W/O Transit Cases | 3,878 | 10K | 10/3 | 90 |

**b. Materials.** The following materials are required to rig this load:

**(1)** Sling set (10,000-pound capacity).

**(2)** Chain length, part number 38850-00053-10, from a 10,000-pound capacity sling set (4 each).

**(3)** Coupling link, part number 577-0615, from a 10,000-pound capacity sling set (4 each).

**(4)** Tape, adhesive, pressure-sensitive, 2-inch wide roll.

**(5)** Cord, nylon, Type III, 550-pound breaking strength.

**(6)** Webbing, cotton, 1/4-inch, 80-pound breaking strength.

**(7)** Felt sheet, cattle hair, Type IV, 1/2-inch or suitable substitute.

**c. Personnel.** Two persons can prepare and rig this load in 15 minutes.

**d. Procedures.** The following procedures apply to this load:

**(1) Preparation.** Prepare the load using the following steps:

**(a)** Engage the parking brake.

**(b)** Secure safety chains and brake hoses to the top of the drawbar with Type III nylon cord.

**(c)** Secure all lids, doors, and caps with tape or Type III nylon cord.

**(d)** Remove transit cases which will interfere with the sling legs and store them in the shelter.

**(e)** Install the rear stabilizer legs with the lower support section fully retracted.

**(f)** Remove the lunette jack and secure in the trailer bed.

**(g)** Secure the four lift rings on the trailer in the up position to a convenient point on the load with 1/4-inch cotton webbing.

**(h)** Connect one additional chain length to each chain of the sling set with the coupling link.

**(2) Rigging.** Rig the load according to the steps in Figure 4-9.

**(3) Hookup.** The hookup team stands in the bed of the trailer. The static wand person discharges the static electricity with the static wand. The hookup person places the apex fitting onto the aircraft cargo hook. The hookup team then carefully dismounts the trailer and remains close to the load as the helicopter removes slack from the sling legs. When successful hookup is assured, the hookup team quickly exits the area underneath the helicopter to the designated rendezvous point.

**(4) Derigging.** Derigging is the reverse of the preparation and rigging procedures in steps d (1) and d (2).

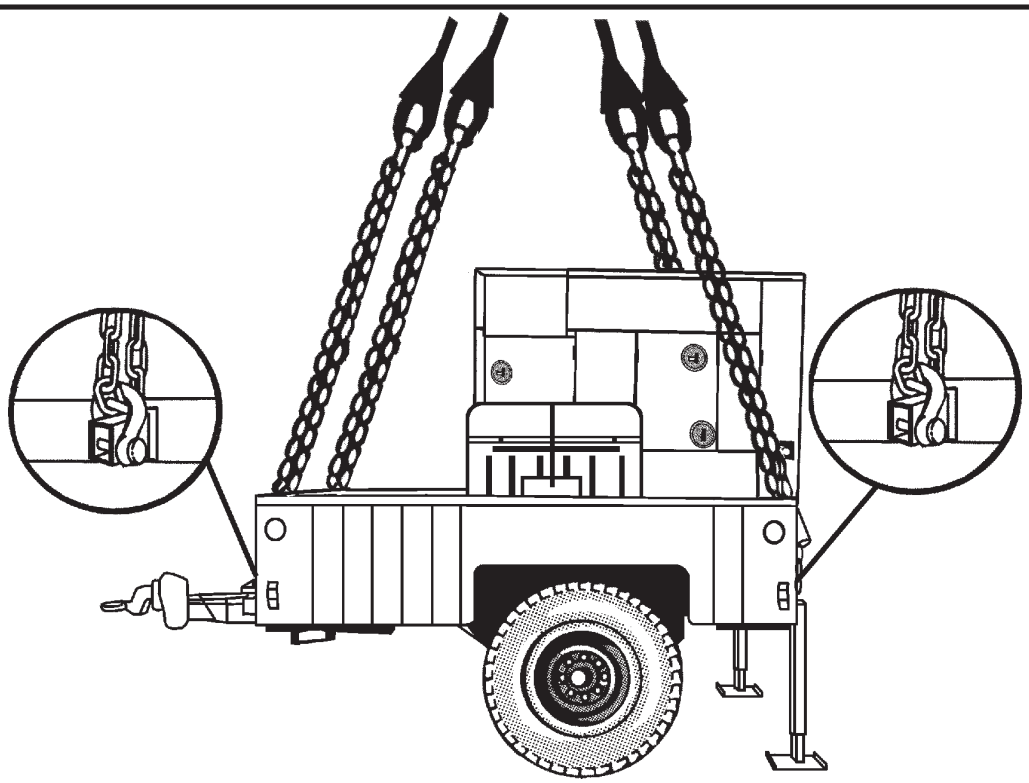

**RIGGING STEPS**

**1.** Position apex fitting on top of the generator. Route outer sling legs 1and 2 to the front of the trailer (lunette end) and inner sling legs 3 and 4 to the rear . Sling legs 1 and 3 must be on the left side of the load.

**2.** Loop the chain end of sling leg 1 through the left front lift provision located on the left front side of the trailer bed. Place the correct link from Table 4-9 in the grab hook. Repeat with sling leg 2 through the right front lift provision. Secure the excess chain with Type III nylon cord.

**3.** Route the chain end of sling leg 3 through the left rear lift provision located on the rear of the trailer bed. Place the correct link from Table 4-9 in the grab hook. Repeat with sling leg 4 through the right rear lift provision.

**4.** Pad the slings/chains in the areas where they contact the generators.

**5.** Cluster and tie or tape (breakaway technique) the sling legs together on top of the generator to prevent entanglement during hookup and lift-off.

*Figure 4-9. High Mobility Trailers (HMT) with Generator (JSTAR)*

# CHAPTER 5

# CERTIFIED SINGLE-POINT RIGGING PROCEDURES FOR TRUCK AND TOWED COMBINATIONS

## 5-1. INTRODUCTION

This chapter contains rigging procedures for single-point truck and towed combination loads that have been certified for sling load. Each rigging procedure is found in a paragraph that includes a description of the load, materials required for rigging, and steps to complete the procedure. An applicability paragraph is also a part of each paragraph and identifies the certified loads. The certified single-point rigging procedures for truck and towed combination loads are in this section. Paragraphs 5-2 and 5-3 give detailed instructions for rigging loads.

## 5-2. M973/M973E1/M1065/M1066 Small Unit Support Vehicle (SUSV)

**a. Applicability.** The following items in Table 5-1 are certified for all helicopters with suitable lift capacity by the US Army Soldier Systems Center:

**Table 5-1. Small Unit Support Vehicle (SUSV)**

| NOMENCLATURE | MAX WEIGHT (POUNDS) | SLING SET | LINK COUNT FRONT/REAR | RECOMMENDED AIRSPEED (KNOTS) |
|---|---|---|---|---|
| M973, Cargo, Tracked | Front-6,380<br>Rear-6,600<br>Total-12,980 | 25K | Listed in Rigging Instructions | 80 |
| M973E1, Cargo, Tracked | Front-6,380<br>Rear-6,600<br>Total-12,980 | 25K | Listed in Rigging Instructions | 80 |
| M1065, Command Post, Tracked | Front-6,380<br>Rear-6,600<br>Total-12,980 | 25K | Listed in Rigging Instructions | 80 |
| M1066, Ambulance, Tracked | Front-6,380<br>Rear-6,600<br>Total-12,980 | 25K | Listed in Rigging Instructions | 80 |

**b. Materials.** The following materials are required to rig this load:

**(1)** Sling set (25,000-pound capacity) (2 sets).

**(2)** Additional chain length, part number 38850-00053-102, from 25,000-pound capacity sling sets (8 each).

**(3)** Additional coupling links, part number 664241, from 25,000-pound capacity sling sets (8 each).

**(4)** Aerial delivery slings, Type XXVI nylon, 4 loop, 20 foot length (2 each) (Used to form 40 foot vertical pendant) (For CH-47 use only).

**(5)** Apex fitting (25,000-pound capacity) (2 each) (For CH-47 use only).

**(6)** Tape, adhesive, pressure-sensitive, 2-inch wide roll.

**(7)** Webbing, cotton, 1/4-inch, 80-pound breaking strength.

**(8)** Tie-down strap, CGU/1B (as required).

**(9)** Cord, nylon, Type III, 550-pound breaking strength.

**c. Personnel.** Two persons can prepare and rig this load in 30 minutes.

**d. Procedures.** The following procedures apply to this load:

**(1) Preparation.** Prepare the load using the following steps:

**(a)** Secure all internal cargo and loose items with Type III nylon cord or tie-down straps.

**(b)** Lock the articulated steering unit with the steering cylinder locks.

**(c)** Secure all doors, windows, and roof hatches in the closed position.

**(d)** Tape all lights and glass fixtures including the windshield.

**(e)** Fold side mirrors inboard and tie or tape as required.

**(f)** Tape windshield wipers to windshield.

**(g)** Secure all hoses and cables located between the two cars with tape or nylon cord to avoid entanglement with sling legs.

**(h)** Screw the lifting eyes in as far as possible while ensuring that they are pointing towards the middle of each car. Tie diagonally opposing rings of each car together (for example, the front right ring to the left rear ring) with Type III nylon cord.

**(i)** Place the mud flaps in the up position and tape them in place.

**(j)** Ensure the fuel tank is not over 3/4 full. Inspect fuel tank cap, oil filler cap, and battery caps for proper installation.

**(2) Rigging.** Rig the load according to the steps in Figure 5-1.

**(3) Hookup.** The helicopter lands near the vehicle. The hookup team crawls under the helicopter. The static wand person discharges the static electricity with the static wand. The hookup person places the apex fitting onto the aircraft cargo hook. The hookup team then moves clear of the helicopter but remains close to the load as the helicopter removes slack from the sling legs. When successful hookup is assured, the hookup team quickly exits the area underneath the helicopter to the designated rendezvous point.

**(4) Derigging.** Derigging is the reverse of the preparation and rigging procedures in steps d (1) and d (2).

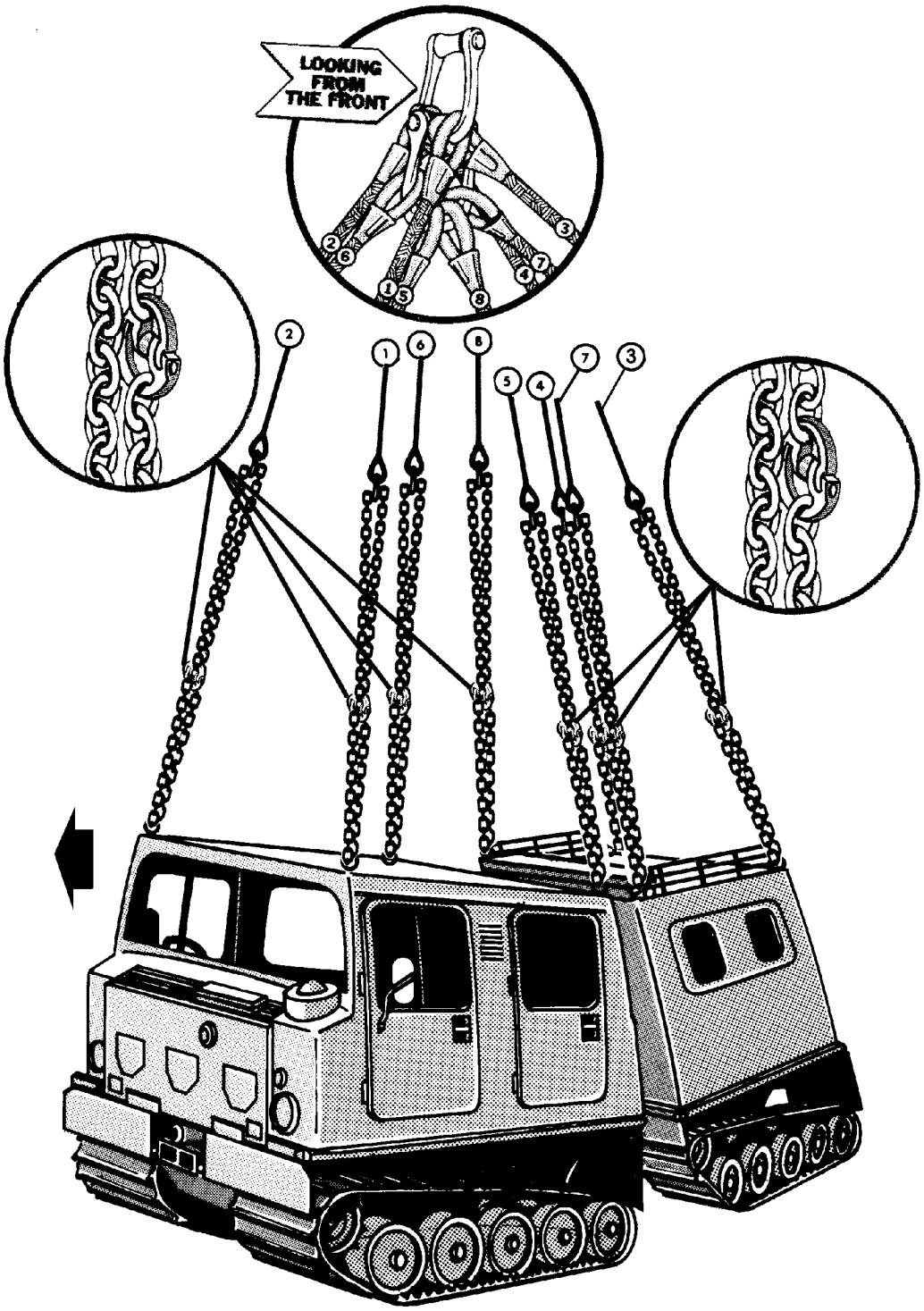


*Figure 5-1. Small Unit Support Vehicle (SUSV)*

**RIGGING STEPS**

**1.** Assemble the two sling sets as shown in the insert on page 5-3. Note the sling numbering sequences.

**2.** Route outer sling legs 1and 2 to the front of the front provisions of the front car. Route inner sling legs 3 and 4 under the roof rack and to the rear provisions of the rear car. Sling legs 1 and 3 must be on the left side of the load.

**3.** Route sling legs 5 and 6 to the rear provisions of the front car. Route sling legs 7 and 8 to the front provisions of the rear car. Sling legs 5 and 7 must be on the left side of the load.

**4.** Loop the chain end of sling leg 1 through the left front lift provision of the front car. Add an additional chain length using the coupling links. The chain must be looped through the lifting provision prior to attaching the additional chain. Place link **40** in the grab hook. Repeat with sling leg 2 through the right front lift provision of the front car. Secure the excess chain with Type III nylon cord.

**5.** Route the chain end of sling leg 5 through the left rear lift provision of the front car. Add an additional chain length using the coupling links. The chain must be looped through the lifting provision prior to attaching the additional chain. Place link **67** in the grab hook. Repeat with sling leg 6 through the right rear lift provision of the front car. Secure the excess chain with Type III nylon cord.

**6.** Route the chain end of sling leg 7 through the left front lift provision of the rear car. Add an additional chain length using the coupling links. The chain must be looped through the lifting provision prior to attaching the additional chain. Place link **67** in the grab hook. Repeat with sling leg 8 through the right front lift provision of the rear car. Secure the excess chain with Type III nylon cord.

**7.** Route the chain end of sling leg 3 through the left rear lift provision of the rear car. Add an additional chain length using the coupling links. The chain must be looped through the lifting provision prior to attaching the additional chain. Place link **40** in the grab hook. Repeat with sling leg 4 through the right rear lift provision of the rear car. Ensure sling legs 3 and 4 are routed under the roof rack. Secure the excess chain with Type III nylon cord.

**8.** Cluster and tie or tape (breakaway technique) the sling legs together on top of the vehicle to prevent entanglement during hookup and lift-off.

**9.** When using a CH-47 helicopter, assemble a 40-foot vertical pendant using two 20-foot aerial delivery slings and two 25,000-pound capacity apex fittings. Attach the end of the 40-foot vertical pendant to the top apex fitting of the sling set by removing the bolt from the apex fitting. Insert the looped end of the vertical pendant into the apex fitting and replace the bolt.

***Figure 5-1. Small Unit Support Vehicle (SUSV) (continued)***

## 5-3. M1067 Flatbed Small Unit Support Vehicle (SUSV)

**a. Applicability.** The following item in Table 5-2 is certified for the **CH-47 HELICOPTER ONLY** by the US Army Soldier Systems Center:

**Table 5-2. Flatbed Small Unit Support Vehicle (SUSV)**

| NOMENCLATURE | MAX WEIGHT (POUNDS) | SLING SET | LINK COUNT FRONT/REAR | RECOMMENDED AIRSPEED (KNOTS) |
|---|---|---|---|---|
| M1067, Flatbed, Tracked | Front-6,600<br>Rear-7,150<br>Total-12,980 | 25K | Listed in Rigging Instructions | 70 |

**b. Materials.** The following materials are required to rig this load:

**(1)** Sling set (25,000-pound capacity) (2 sets).

**(2)** Additional chain length, part number 38850-00053-102, from 25,000-pound capacity sling sets (12 each).

**(3)** Additional coupling links, part number 664241, from 25,000-pound capacity sling sets (12 each).

**(4)** Aerial delivery slings, Type XXVI nylon, 4 loop, 20 foot length (2 each) (Used to form 40 foot vertical pendant) (For CH-47 use only).

**(5)** Apex fitting (25,000-pound capacity) (2 each) (For CH-47 use only).

**(6)** Tape, adhesive, pressure-sensitive, 2-inch wide roll.

**(7)** Webbing, cotton, 1/4-inch, 80-pound breaking strength.

**(8)** Tie-down strap, CGU/1B (as required).

**(9)** Cord, nylon, Type III, 550-pound breaking strength.

**c. Personnel.** Two persons can prepare and rig this load in 30 minutes.

**d. Procedures.** The following procedures apply to this load:

**(1) Preparation.** Prepare the load using the following steps:

**(a)** Secure all internal cargo and loose items with Type III nylon cord or tie-down straps.

**(b)** Lock the articulated steering unit with the steering cylinder locks.

**(c)** Secure all doors, windows, and roof hatches in the closed position.

**(d)** Tape all lights and glass fixtures including the windshield.

**(e)** Fold side mirrors inboard and tie or tape as required.

**(f)** Tape windshield wipers to windshield.

**(g)** Secure all hoses and cables located between the two cars with tape or nylon cord to avoid entanglement with sling legs.

**(h)** Screw the lifting eyes in as far as possible while ensuring that they are pointing towards the middle of each car. Tie diagonally opposing rings of each car together (for example, the front right ring to the left rear ring) with Type III nylon cord.

**(i)** Place the mud flaps in the up position and tape them in place.

**(j)** Cargo in the rear car must be loaded so that it will not make contact with the sling legs and that it is not higher than the sides of the rear car.

**(2) Rigging.** Rig the load according to the steps in Figure 5-2.

**(3) Hookup.** The helicopter lands near the vehicle. The hookup team crawls under the helicopter. The static wand person discharges the static electricity with the static wand. The hookup person places the apex fitting onto the aircraft cargo hook. The hookup team then moves clear of the helicopter but remains close to the load as the helicopter removes slack from the sling legs. When successful hookup is assured, the hookup team quickly exits the area underneath the helicopter to the designated rendezvous point.

**(4) Derigging.** Derigging is the reverse of the preparation and rigging procedures in steps d (1) and d (2).

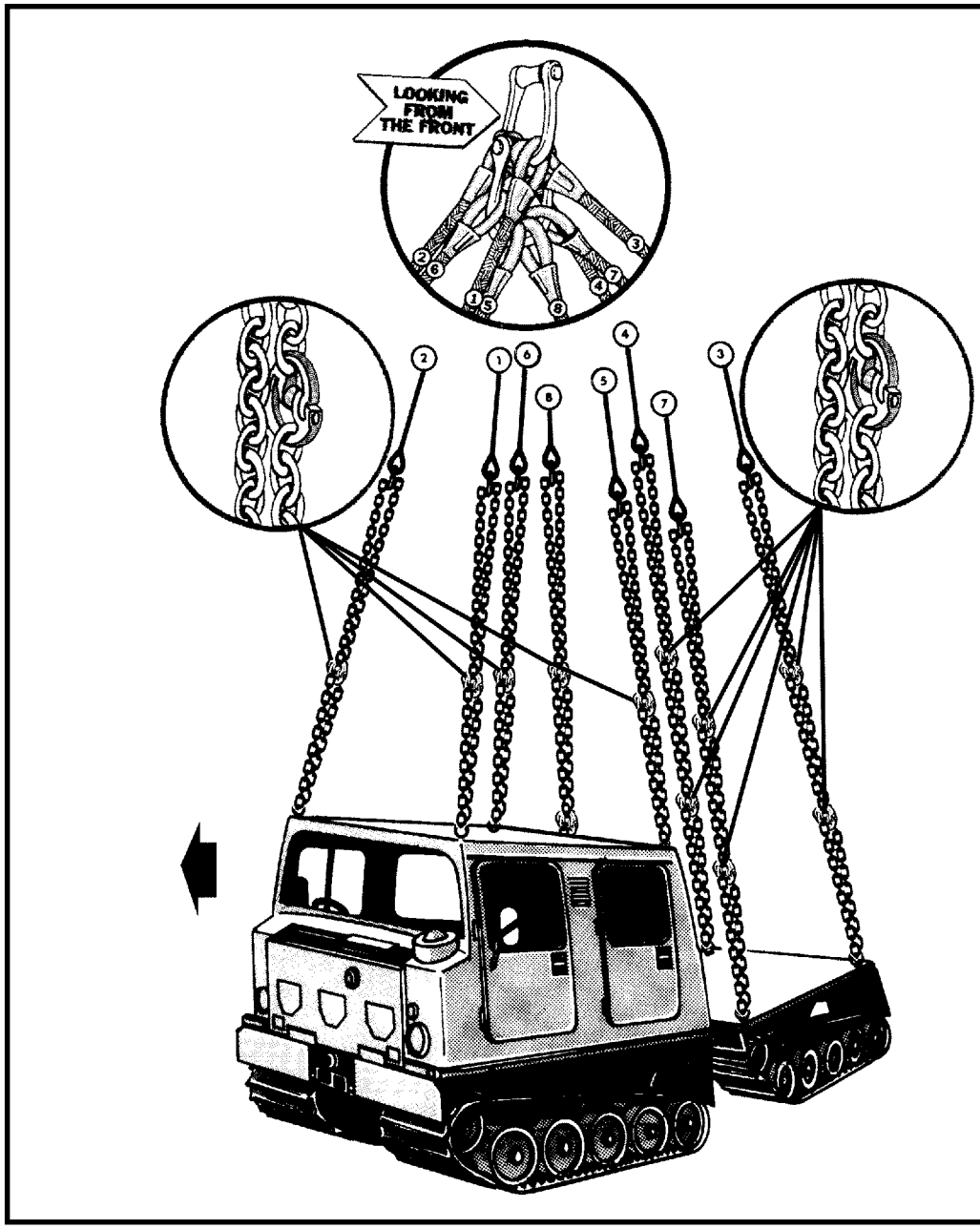


*Figure 5-2. Flatbed Small Unit Support Vehicle (SUSV)*

**RIGGING STEPS**

**1.** Assemble the two sling sets as shown on page 5-6. Note the sling numbering sequences.

**2.** Route outer sling legs 1and 2 to the front of the front provisions of the front car. Route inner sling legs 3 and 4 to the rear provisions of the rear car. Sling legs 1 and 3 must be on the left side of the load.

**3.** Route sling legs 5and 6 to the rear provisions of the front car. Route sling legs 7 and 8 to the front provisions of the rear car. Sling legs 5 and 7 must be on the left side of the load.

**4.** Loop the chain end of sling leg 1 through the left front lift provision of the front car. Attach an additional chain length using the coupling links. The chain must be looped through the lifting provision prior to attaching the additional chain. Place link **40** in the grab hook. Repeat with sling leg 2 through the right front lift provision of the front car. Secure the excess chain with Type III nylon cord.

**5.** Route the chain end of sling leg 5 through the left rear lift provision of the front car. Attach an additional chain length using the coupling links. The chain must be looped through the lifting provision prior to attaching the additional chain. Place link **67** in the grab hook. Repeat with sling leg 6 through the right rear lift provision of the front car. Secure the excess chain with Type III nylon cord.

**6.** Route the chain end of sling leg 7 through the left front lift provision of the rear car. Attach two additional chain lengths using the coupling links. The chain must be looped through the lifting provision prior to attaching the additional chains. Place link **67** in the grab hook. Repeat with sling leg 8 through the right front lift provision of the rear car. Secure the excess chain with Type III nylon cord.

**7.** Route the chain end of sling leg 3 through the left rear lift provision of the rear car. Attach two additional chain lengths using the coupling links. The chain must be looped through the lifting provision prior to attaching the additional chains. Place link **40** in the grab hook. Repeat with sling leg 4 through the right rear lift provision of the rear car.

**8.** Cluster and tie or tape (breakaway technique) the sling legs together on top of the vehicle to prevent entanglement during hookup and lift-off.

**9.** Secure legs 7 and 8 to the outside supports of the spare fuel can racks using 1/4-inch cotton webbing to prevent damage to the racks during lift-off.

**10.** Assemble a 40-foot vertical pendant using two 20-foot aerial delivery slings and two 25,000-pound capacity apex fittings. Attach the end of the 40-foot vertical pendant to the top apex fitting of the sling set by removing the bolt from the apex fitting, inserting the looped end of the vertical pendant into the apex fitting and replacing the bolt.

***Figure 5-2. Flatbed Small Unit Support Vehicle (SUSV) (continued)***

# CHAPTER 6

# CERTIFIED SINGLE-POINT RIGGING PROCEDURES FOR HOWITZERS AND WEAPONS SYSTEMS

## 6-1. INTRODUCTION

This chapter contains rigging procedures for single-point howitzer and weapon system loads that have been certified for sling load. Each rigging procedure is found in a paragraph that includes a description of the load, materials required for rigging, and steps to complete the procedure. An applicability paragraph is also a part of each paragraph and identifies the certified loads. The certified single-point rigging procedures for truck and towed combination loads are in this section. Paragraphs 6-2 through 6-14 give detailed instructions for rigging loads.

**NOTE: Reach Pendants may be used on all single point loads. A static discharge person is not required when using a Reach Pendant.**

## 6-2. M101A1 105-MM Howitzer, with or without A-22 Cargo Bags

**a. Applicability.** The following items in Table 6-1 are certified for all helicopters with suitable lift capacity by the US Army Natick Research, Development, and Engineering Center:

**Table 6-1. M101A1 105-MM Howitzer**

| NOMENCLATURE | MAX WEIGHT (POUNDS) | SLING SET | LINK COUNT FRONT/REAR | RECOMMENDED AIRSPEED (KNOTS) |
|---|---|---|---|---|
| M101A1 Howitzer | 4,980 | 10K<br>15K<br>25K<br>40K | 30/30<br>33/3<br>12/12<br>22/3 | 95 |
| M101A1 Howitzer with one A-22 Cargo Bag | 7,180 | 10K<br>15K<br>25K<br>40K | 30/30<br>33/3<br>12/12<br>22/3 | 75 |
| M101A1 Howitzer with two A-22 Cargo Bags | 9,380 | 10K<br>15K<br>25K<br>40K | 30/30<br>33/3<br>12/12<br>22/3 | 80 |
| M101A1 Howitzer with three A-22 Cargo Bags | 11,580 | 10K<br>15K<br>25K<br>40K | 30/30<br>33/3<br>12/12<br>22/3 | 75 |

**b. Materials.** The following materials are required to rig this load:

**(1)** Sling set (10,000 or 25,000-pound capacity) (USA).

**(2)** Sling set (15,000 or 40,000-pound capacity) (USMC).

**(3)** Sling leg assembly (2,500-pound capacity) from a 10,000-pound sling set, one per A-22 container.

**(4)** Tape, adhesive, pressure-sensitive, 2-inch wide roll.

**(5)** Cord, nylon, Type III, 550-pound breaking strength.

**(6)** Webbing, cotton, 1/4-inch, 80-pound breaking strength.

**(7)** Felt sheet, cattle hair, Type IV, 1/2-inch or suitable substitute.

**(8)** Tie-down strap, CGU/1B (as required).

**(9)** Bag, Cargo, A-22, as required.

**(10)** Apex fitting (10,000-pound capacity), one per A-22 container.

**c. Personnel.** Two persons can prepare and rig this load in 20 minutes.

**d. Procedures.** The following procedures apply to this load:

**(1) Preparation.** Prepare the load using the following steps:

**(a)** Close and lock the breech.

**(b)** Close and secure the trails. Rotate the lunette to the down position. Secure the trail closing lock handle with Type III nylon cord or tape.

**(c)** Remove and secure the muzzle, breech, and tube covers.

**(d)** Pad or remove all sight mounts.

**(e)** Place the gun section equipment chest and other equipment on the trails and secure it with tie-down straps.

**(f)** Engage one hand brake.

**(g)** Pad the gun tube above the cradle and around the forward edge of the recoil damper assembly. Secure the padding with tape or 1/4-inch cotton webbing.

**(h)** Pad the left and right trails aft of the traveling lock shaft area. Secure the padding with tape or 1/4-inch cotton webbing.

**(2) Rigging.** Rig the load according to the steps in Figure 6-1.

**(3) Hookup.** The hookup team stands on top of the trails or alongside the howitzer. The static wand person discharges the static electricity with the static wand. The hookup person places the apex fitting onto the aircraft cargo hook. The hookup team then moves clear of the helicopter but remains close to the load as the helicopter removes slack from the sling legs. When successful hookup is assured, the hookup team quickly exits the area underneath the helicopter to the designated rendezvous point.

**(4) Derigging.** Derigging is the reverse of the preparation and rigging procedures in steps d (1) and d (2).

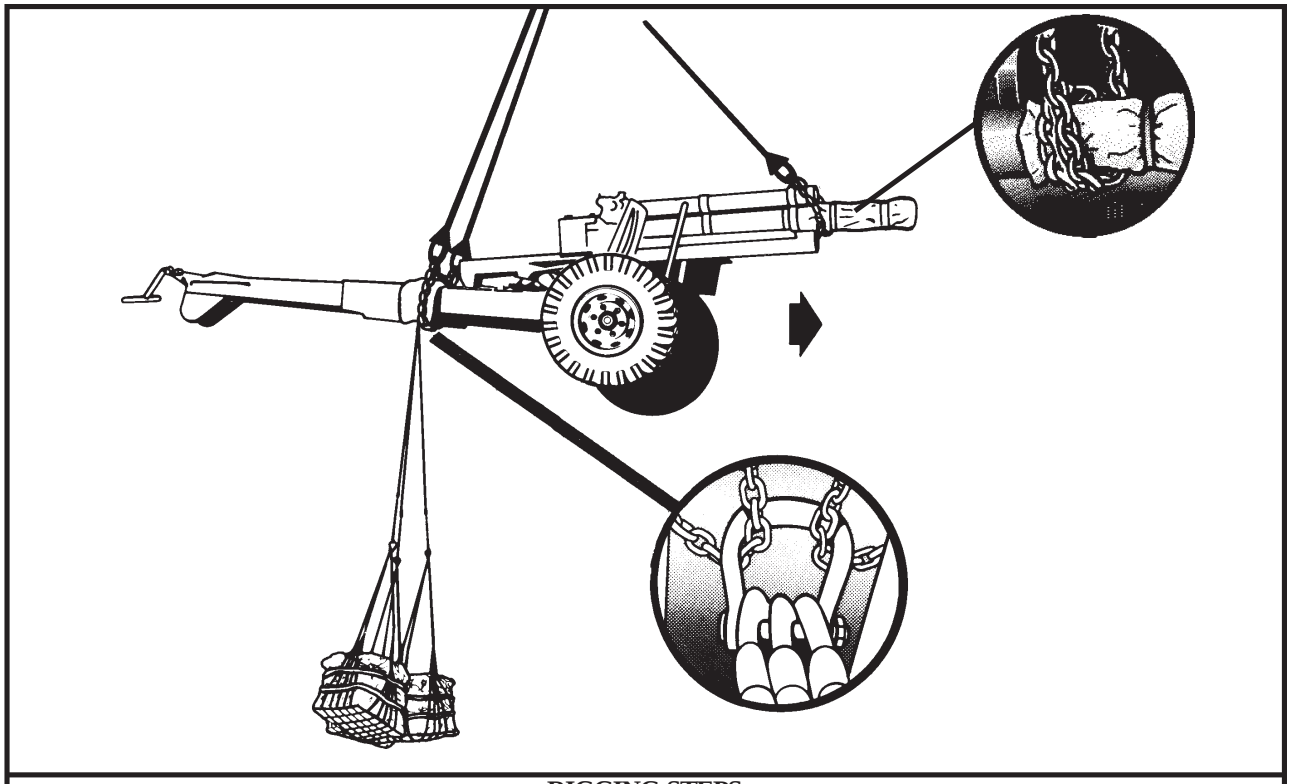

**RIGGING STEPS**

**1.** Position the apex fitting on top of the breech. Route outer sling legs 1and 2 to the trails. Route inner sling legs 3 and 4 to the muzzle. Sling legs 1 and 3 must be on the left side of the load.

**2.** Wrap the chain end of sling leg 1 around the padded area of the left trail. When using the 10,000 or 25,000-pound capacity sling set, make two complete wraps around the left trail. Place the correct link from Table 6-1 in the grab hook. Repeat with sling leg 2 on the right trail. Secure the excess chain with Type III nylon cord.

**3.** Position the grab hook sling leg 3 on the left side of the gun tube padded area. Wrap the chain end of sling leg 3 one complete turn around the gun tube padded area. Place the correct link from Table 6-1 in the grab hook. Repeat with sling leg 4 with the grab hook on the opposite side of the gun tube. Ensure the chains completely encircle and not just cradle the gun tube.

**4.** Cluster and tie or tape (breakaway technique) the sling legs together on top of the howitzer to prevent entanglement during hookup and lift-off.

**5.** Attach the accompanying A-22 (s) by placing an additional apex fitting around the inner chains of sling legs 1 and 2, so the fitting is between the trails. Route the chain end of the additional sling leg through the clevis on the A-22 cargo bag and insert link 3 in the grab hook. Place the other end of the sling leg in the additional apex fitting between the trails. Repeat this procedure for each A-22 cargo bag being lifted.

***Figure 6-1. M101A1 105-MM Howitzer***

## 6-3. M102 105-MM Howitzer

**a. Applicability.** The following item in Table 6-2 is certified for all helicopters with suitable lift capacity by the US Army Natick Research, Development, and Engineering Center:

**Table 6-2. M102 105-MM Howitzer**

| NOMENCLATURE | MAX WEIGHT (POUNDS) | SLING SET | LINK COUNT FRONT/REAR | RECOMMENDED AIRSPEED (KNOTS) |
|---|---|---|---|---|
| M102 Howitzer | 3,330 | 10K | 55/3 | 80 |

**b. Materials.** The following materials are required to rig this load:

**(1)** Sling set (10,000-pound capacity).

**(2)** Tape, adhesive,pressure-sensitive, 2-inch wide roll.

**(3)** Cord, nylon, Type III, 550-pound breaking strength.

**(4)** Webbing, cotton, 1/4-inch, 80-pound breaking strength.

**(5)** Tie-down strap, CGU/1B (as required).

**c. Personnel.** Two persons can prepare and rig this load in 10 minutes.

**d. Procedures.** The following procedures apply to this load:

**(1) Preparation.** Prepare the load using the following steps:

**(a)** Place the muzzle and sight covers on the howitzer and secure them with Type III nylon cord.

**(b)** Place the section equipment chest on the end of the trails and secure it with tie-down straps.

**(2) Rigging.** Rig the load according to the steps in Figure 6-2.

**(3) Hookup.** The hookup team stands on top of the trails next to the breech. The static wand person discharges the static electricity with the static wand. The hookup person places the apex fitting onto the aircraft cargo hook. The hookup team then moves clear of the helicopter but remains close to the load as the helicopter removes slack from the sling legs. When successful hookup is assured, the hookup team quickly exits the area underneath the helicopter to the designated rendezvous point.

**(4) Derigging.** Derigging is the reverse of the preparation and rigging procedures in steps d (1) and d (2).

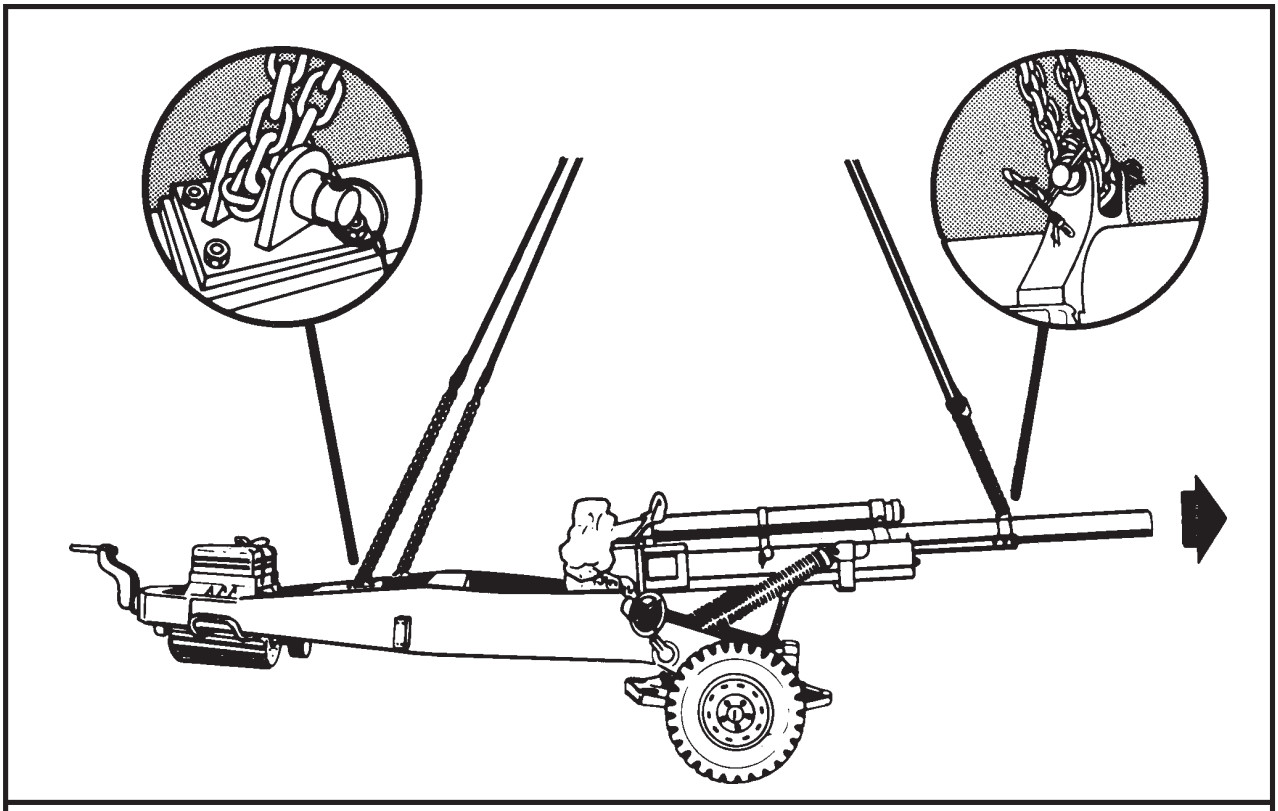

**RIGGING STEPS**

**1.** Position the apex fitting on top of the breech. Route outer sling legs 1and 2 to the trails. Route inner sling legs 3 and 4 to the muzzle. Sling legs 1 and 3 must be on the left side of the load.

**2.** Remove the pin from the lift provision on the left trail. Center the chain end of sling leg 1 in the lift provision. Reinstall the pin in the lift provision. Place the correct link from Table 6-2 in the grab hook. Repeat with sling leg 2 on the right trail. Secure the excess chain with Type III nylon cord.

**3.** Remove the pin from the lift provision on the gun tube. Center the chain end of sling legs 3and 4 in the lift provision. Reinstall the pin in the lift provision. Place the correct link from Table 6-2 in the grab hook. Secure the excess chain with Type III nylon cord.

**NOTE: This item may be rigged with only three legs by eliminating one of the sling legs to the gun tube.**

**4.** Cluster and tie or tape (breakaway technique) the sling legs together on top of the howitzer to prevent entanglement during hookup and lift-off.

*Figure 6-2. M102 105-MM Howitzer*

## 6-4. M102 105-MM Howitzer with One A-22 Cargo Bag

**a. Applicability.** The following item in Table 6-3 is certified for all helicopters with suitable lift capacity by the US Army Natick Research, Development, and Engineering Center:

**Table 6-3. M102 105-MM Howitzer with One A-22 Cargo Bag**

| NOMENCLATURE | MAX WEIGHT (POUNDS) | SLING SET | LINK COUNT FRONT/REAR | RECOMMENDED AIRSPEED (KNOTS) |
|---|---|---|---|---|
| M102 Howitzer with one A-22 Cargo Bag | 5,660 | 10K | 105/3 | 90 |

**NOTE: More than one A-22 may be used with these rigging procedures as long as the total weight of the A-22s does not exceed 2,500 pounds.**

**b. Materials.** The following materials are required to rig this load:

**(1)** Sling set (10,000-pound capacity).

**(2)** Tape, adhesive, pressure-sensitive, 2-inch wide roll.

**(3)** Cord, nylon, Type III, 550-pound breaking strength.

**(4)** Webbing, cotton, 1/4-inch, 80-pound breaking strength.

**(5)** Assembly, tie-down (10,000-pound capacity).

**(6)** Clevis, large

**(7)** Bag, Cargo, A-22.

**c. Personnel.** Two persons can prepare and rig this load in 30 minutes.

**d. Procedures.** The following procedures apply to this load:

**(1) Preparation.** Prepare the load using the following steps:

**(a)** Place the muzzle and sight covers on the howitzer and secure them with Type III nylon cord.

**(b)** Place the section equipment chest on the end of the trails and secure it with tie-down straps.

**(c)** Place a large clevis assembly on the ground between the howitzer trails.

**(2) Rigging.** Rig the load according to the steps in Figure 6-3.

**(3) Hookup.** The hookup team stands on top of the trails next to the breech. The static wand person discharges the static electricity with the static wand. The hookup person places the apex fitting onto the aircraft cargo hook. The hookup team then moves clear of the helicopter but remains close to the load as the helicopter removes slack from the sling legs. When successful hookup is assured, the hookup team quickly exits the area underneath the helicopter to the designated rendezvous point.

**(4) Derigging.** Derigging is the reverse of the preparation and rigging procedures in steps d (1) and d (2).

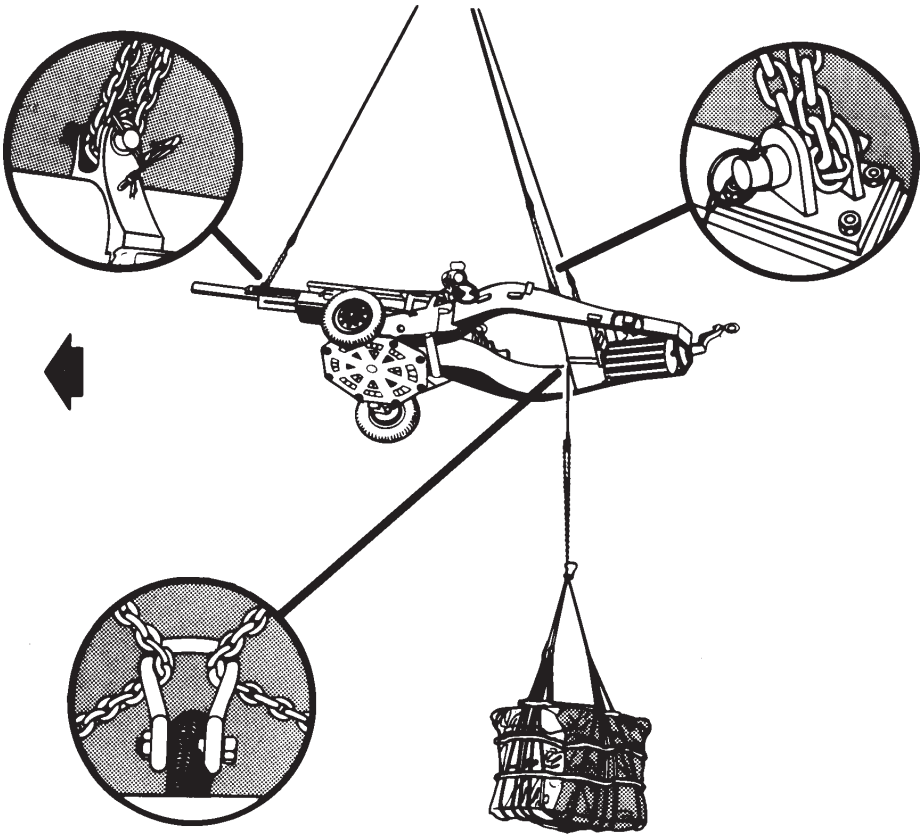

**RIGGING STEPS**

**1.** Remove one sling leg from the sling set. This sling leg will be used to lift the A-22 cargo bag.

**2.** Position the apex fitting on top of the breech. Route outer sling legs 1and 2 to the trails. Route inner sling leg 3 to the muzzle.

**3.** Remove the pin from the lift provision on the left trail. Center the chain end of sling leg 1 in the lift provision. Reinstall the pin in the lift provision. Place the correct link from Table 6-3 in the grab hook. Repeat with sling leg 2 on the right trail. Secure the excess chain with Type III nylon cord.

**4.** Remove the pin from the lift provision on the gun tube. Center the chain end of sling leg 3 in the lift provision. Reinstall the pin in the lift provision. Place the correct link from Table 6-3 in the grab hook. Secure the excess chain with Type III nylon cord.

**5.** Cluster and tie or tape (breakaway technique) the sling legs together on top of the howitzer to prevent entanglement during hookup and lift-off.

**6.** Attach the large clevis around the inner chains of sling legs 1 and 2, so the clevis is between the trails. Route the chain end of the additional sling leg through the clevis on the A-22 cargo bag and insert link 3 in the grab hook. Route the sling leg under the trail and place eye of the sling leg on the bolt of the large clevis between the trails.

***Figure 6-3. M102 105-MM Howitzer with One A-22 Cargo Bag***

## 6-5. M102 105-MM Howitzer with Two or Three A-22 Cargo Bags

**a. Applicability.** The following items in Table 6-4 are certified for all helicopters with suitable lift capacity by the US Army Natick Research, Development, and Engineering Center:

**Table 6-4. M102 105-MM Howitzer with Two or Three A-22 Cargo Bags**

| NOMENCLATURE | MAX WEIGHT (POUNDS) | SLING SET | LINK COUNT FRONT/REAR | RECOMMENDED AIRSPEED (KNOTS) |
|---|---|---|---|---|
| M102 Howitzer with Two A-22 Cargo Bags | 7,560 | 25K | 83/3 | 80 |
| M102 Howitzer with Three A-22 Cargo Bags | 9,760 | 25K | 83/3 | 80 |

**b. Materials.** The following materials are required to rig this load:

**(1)** Sling set (25,000-pound capacity).

**(2)** Sling leg assembly (2,500-pound capacity) from a 10,000-pound capacity sling set. One for each A-22 cargo bag.

**(3)** Bag, Cargo, A-22, as required.

**(4)** Tape, adhesive, pressure-sensitive, 2-inch wide roll.

**(5)** Cord, nylon, Type III, 550-pound breaking strength.

**(6)** Tie-down strap, cargo, CGU-1/B, as required.

**(7)** Clevis, large.

**(8)** Clevis, medium (2 each).

**(9)** Webbing, cotton, 1/4-inch, 80-pound breaking strength.

**(10)** Fitting, apex (10,000-pound capacity).

**c. Personnel.** Two persons can prepare and rig this load in 60 minutes.

**d. Procedures.** The following procedures apply to this load:

**(1) Preparation.** Prepare the load using the following steps:

**(a)** Place the muzzle and sight covers on the howitzer and secure them with Type III nylon cord.

**(b)** Place the section equipment chest on the end of the trails and secure it with tie-down straps.

**(c)** Place a large clevis assembly on the ground between the howitzer trails.

**(d)** Remove the left trail lift provision pin and place a medium clevis assembly, bell portion down, in the provision. Reinstall the lift provision pin. Repeat the procedures for the lift provision on the right trail.

**(2) Rigging.** Rig the load according to the steps in Figure 6-4.

**(3) Hookup.** The hookup team stands on top of the trails next to the breech. The static wand person discharges the static electricity with the static wand. The hookup person places the apex fitting onto the aircraft cargo hook. The hookup team then moves clear of the helicopter but remains close to the load as the helicopter removes slack from the sling legs. When successful hookup is assured, the hookup team quickly exits the area underneath the helicopter to the designated rendezvous point.

**(4) Derigging.** Derigging is the reverse of the preparation and rigging procedures in steps d (1) and d (2).

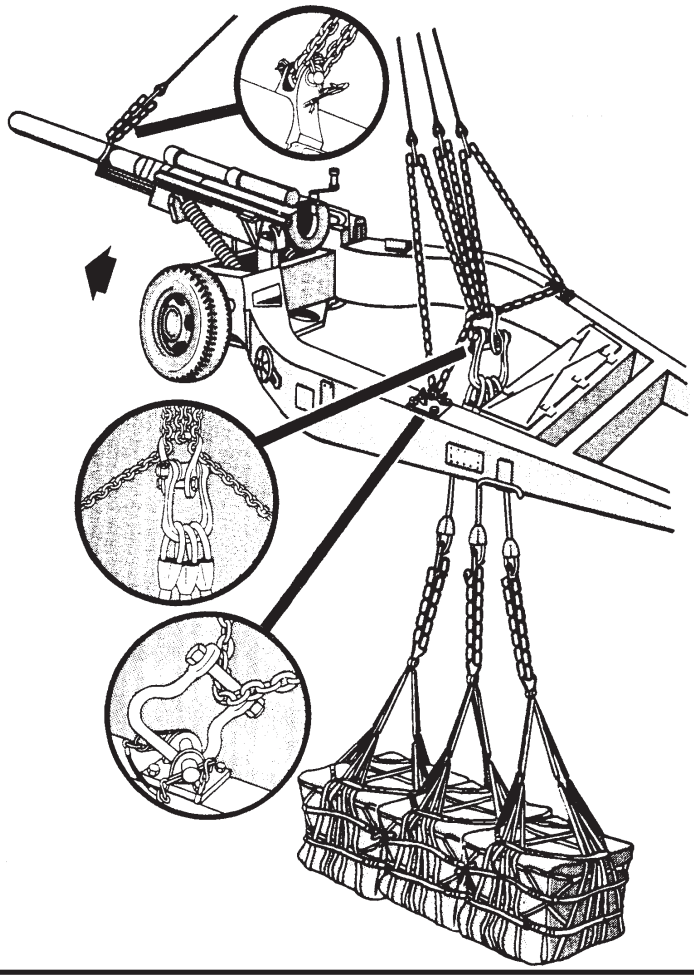

**RIGGING STEPS**

**1.** Position the apex fitting on top of the breech. Route outer sling legs 1and 2 to the trails. Route inner sling leg 3 to the howitzer tube, and sling leg 4 to the area between the trails.

**2.** Route sling leg 1 through the medium clevis installed on the left trail and through the large clevis on the ground. Place the correct link from Table 6-4 in the grab hook. Repeat with sling leg 2 on the right trail. Secure the excess chain with Type III nylon cord

**3.** Remove the pin from the lift provision on the gun tube. Center the chain end of sling leg 3 in the lift provision. Reinstall the pin in the lift provision. Place the correct link from Table 6-4 in the grab hook. Secure the excess chain with Type III nylon cord.

**4.** Route the chain end of sling leg 4 through the large clevis on the ground and insert link 56 in the grab hook.

**5.** Cluster and tie or tape (breakaway technique) the sling legs together on top of the howitzer to prevent entanglement during hookup and lift-off.

**6.** Route the chain end of the additional sling legs through the clevis on the A-22 cargo bags, one sling leg for each A-22 cargo bag, and insert link 3 in the grab hook. Route the sling legs under the trail and place the eye of the sling legs on an apex fitting. Attach the apex fitting to the large clevis between the trails.

***Figure 6-4. M102 105-MM Howitzer with Two or Three A-22 Cargo Bags***

## 6-6. Two M102 105-MM Howitzers

**a. Applicability.** The following items in Table 6-5 are certified for all helicopters with suitable lift capacity by the US Army Natick Research, Development, and Engineering Center:

**Table 6-5. Two M102 105-MM Howitzers**

| NOMENCLATURE | MAX WEIGHT (POUNDS) | SLING SET | LINK COUNT FRONT/CENTER/REAR | RECOMMENDED AIRSPEED (KNOTS) |
|---|---|---|---|---|
| Two M102 Howitzers | 6,660 | 10K | 60/20/3 | 90 |

**b. Materials.** The following materials are required to rig this load:

**(1)** Sling set (10,000-pound capacity) with one additional sling leg .

**(2)** Tape, adhesive, pressure-sensitive, 2-inch wide roll.

**(3)** Cord, nylon, Type III, 550-pound breaking strength.

**(4)** Webbing, cotton, 1/4-inch, 80-pound breaking strength.

**(5)** Tie-down strap, cargo, CGU-1/B.

**(6)** Pad, energy dissipating, honeycomb, 30- x 36-inch. (A wooden block or four sheets of felt may be substituted for the honeycomb.)

**(7)** Felt sheet, 24- x 60-inch (2 each) or equivalent padding.

**c. Personnel.** Two persons can prepare and rig this load in 30 minutes.

**d. Procedures.** The following procedures apply to this load:

**(1) Preparation.** Prepare the load using the following steps:

**(a)** Position two howitzers side by side with the wheels approximately 18 inches apart and the barrels facing the same direction.

**(b)** Place honeycomb padding between the inside wheels of the howitzers. Slide the howitzers together and securely lash the wheels together with the tie-down straps.

**(c)** Wrap one sheet of felt around each inboard trail. Secure the felt with tape or Type III nylon cord. Ensure the lift provisions are accessible.

**(d)** Place the muzzle and sight covers on the howitzer and secure them with Type III nylon cord.

**(2) Rigging.** Rig the load according to the steps in Figure 6-5.

**(3) Hookup.** The hookup team stands on top of the padding wrapped around the inside trails. The static wand person discharges the static electricity with the static wand. The hookup person places the apex fitting onto the aircraft cargo hook. The hookup team then moves clear of the helicopter but remains close to the load as the helicopter removes slack from the sling legs. When successful hookup is assured, the hookup team quickly exits the area underneath the helicopter to the designated rendezvous point.

**(4) Derigging.** Derigging is the reverse of the preparation and rigging procedures in steps d (1) and d (2).

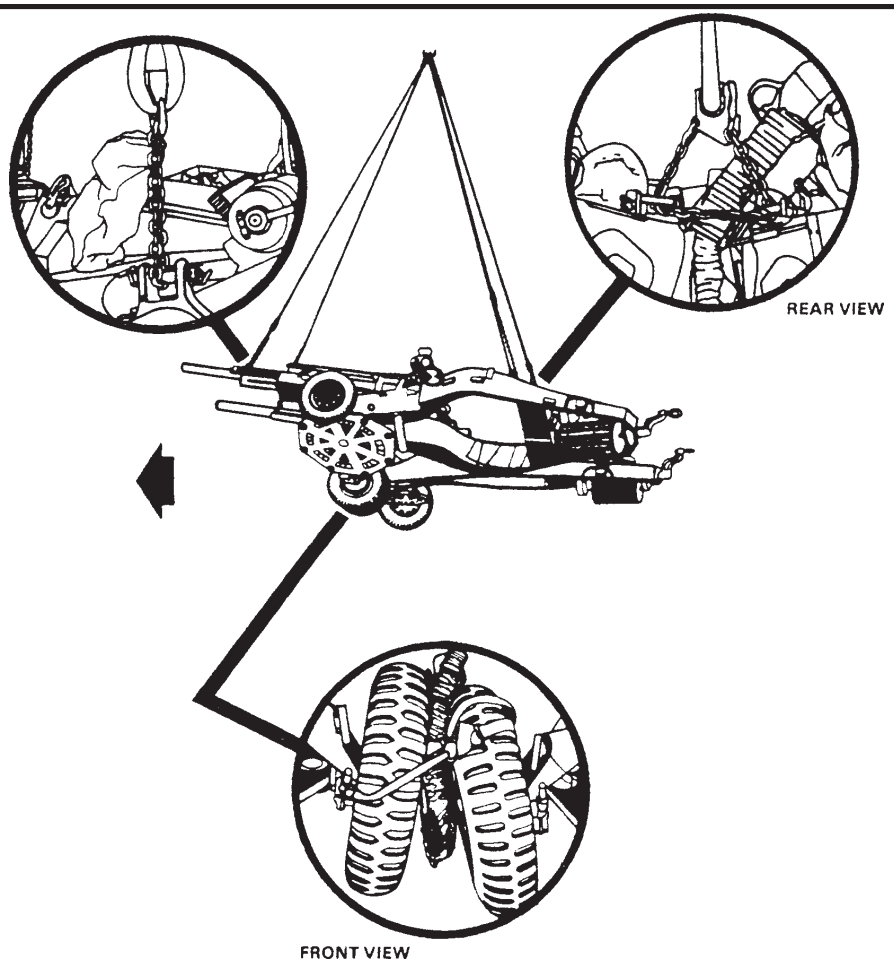


**RIGGING STEPS**

**1.** Add the additional sling leg to the sling set. The outer sling legs are numbers 1 and 2, the inner sling legs are numbers 3 and 4, and the center sling leg is number 5.

**2.** Position the apex fitting on top of the inner wheels at the center of the load. Route outer sling legs 1and 2 to the barrels. Route inner sling legs 3 and 4 to the outside trails, and center sling leg 5 to the inside trails of both howitzers. Sling legs 1 and 3 must be connected to the left howitzer.

**3.** Route the chain end of sling leg 1 through the lift provision on the barrel of the left howitzer. Place the correct link from Table 6-5 in the grab hook. Repeat with sling leg 2 on the right howitzer. Secure the excess chain with Type III nylon cord

**4.** Route the chain end of sling leg 3 through the lift provision on the outside trail of the left howitzer. Place the correct link from Table 6-5 in the grab hook. Repeat with sling leg 4 on the right howitzer. Secure the excess chain with Type III nylon cord.

**5.** Route the chain end of sling leg 5 through the lift provisions on the inside trails of both howitzers. Place the correct link from Table 6-5 in the grab hook. Secure the excess chain with Type III nylon cord.

**6.** Cluster and tie or tape (breakaway technique) the sling legs together on top of the howitzers to prevent entanglement during hookup and lift-off.

*Figure 6-5. Two M102 105-MM Howitzers*

## 6-7. Two M102 105-MM Howitzers with One, Two, or Three A-22 Cargo Bags

**a. Applicability.** The following items in Table 6-6 are certified for all helicopters with suitable lift capacity by the US Army Natick Research, Development, and Engineering Center:

**Table 6-6. Two M102 105-MM Howitzers with One, Two, or Three A-22 Cargo Bags**

| NOMENCLATURE | MAX WEIGHT (POUNDS) | SLING SET | LINK COUNT FRONT/CENTER/REAR | RECOMMENDED AIRSPEED (KNOTS) |
|---|---|---|---|---|
| Two M102 Howitzers with one A-22 Cargo Bag | 8,860 | 10K | 60/20/3 | 90 |
| Two M102 Howitzers with two A-22 Cargo Bags | 11,060 | 25K | 48/16/3 | 90 |
| Two M102 Howitzers with three A-22 Cargo Bags | 13,260 | 25K | 48/16/3 | 90 |

**b. Materials.** The following materials are required to rig this load:

**(1)** Sling set (10,000 or 25,000-pound capacity) with additional sling leg(s) (as required).

**(2)** Bag, Cargo, A-22, as required.

**(3)** Apex fitting (10,000 or 25,000-pound capacity) (as required) (1 each).

**(4)** Tape, adhesive, pressure-sensitive, 2-inch wide roll.

**(5)** Cord, nylon, Type III, 550-pound breaking strength.

**(6)** Webbing, cotton, 1/4-inch, 80-pound breaking strength.

**(7)** Tie-down strap, cargo, CGU-1/B.

**(8)** Pad, energy dissipating, honeycomb, 30- x 36-inch. (A wooden block or four sheets of felt may be substituted for the honeycomb.)

**(9)** Felt sheet, 24- x 60-inch (2 each) or equivalent padding.

**c. Personnel.** Two persons can prepare and rig this load in 30 minutes. Add 15 minutes for each A-22 cargo bag.

**d. Procedures.** The following procedures apply to this load:

**(1) Preparation.** Prepare the load using the following steps:

**(a)** Position two howitzers side by side with the wheels approximately 18 inches apart and the barrels facing the same direction.

**(b)** Place honeycomb padding between the inside wheels of the howitzers. Slide the howitzers together and securely lash the wheels together with the tie-down straps.

**(c)** Wrap one sheet of felt around each inboard trail. Secure the felt with tape or Type III nylon cord. Ensure the lift provisions are accessible.

**(d)** Place the muzzle and sight covers on the howitzer and secure them with Type III nylon cord.

**(2) Rigging.** Rig the load according to the steps in Figure 6-6.

**(3) Hookup.** The hookup team stands on top of the padding wrapped around the inside trails. The static wand person discharges the static electricity with the static wand. The hookup person places the apex fitting onto the aircraft cargo hook. The hookup team then moves clear of the helicopter but remains close to the load as the helicop

ter removes slack from the sling legs. When successful hookup is assured, the hookup team quickly exits the area underneath the helicopter to the designated rendezvous point.

**(4) Derigging.** Derigging is the reverse of the preparation and rigging procedures in steps d (1) and d (2).

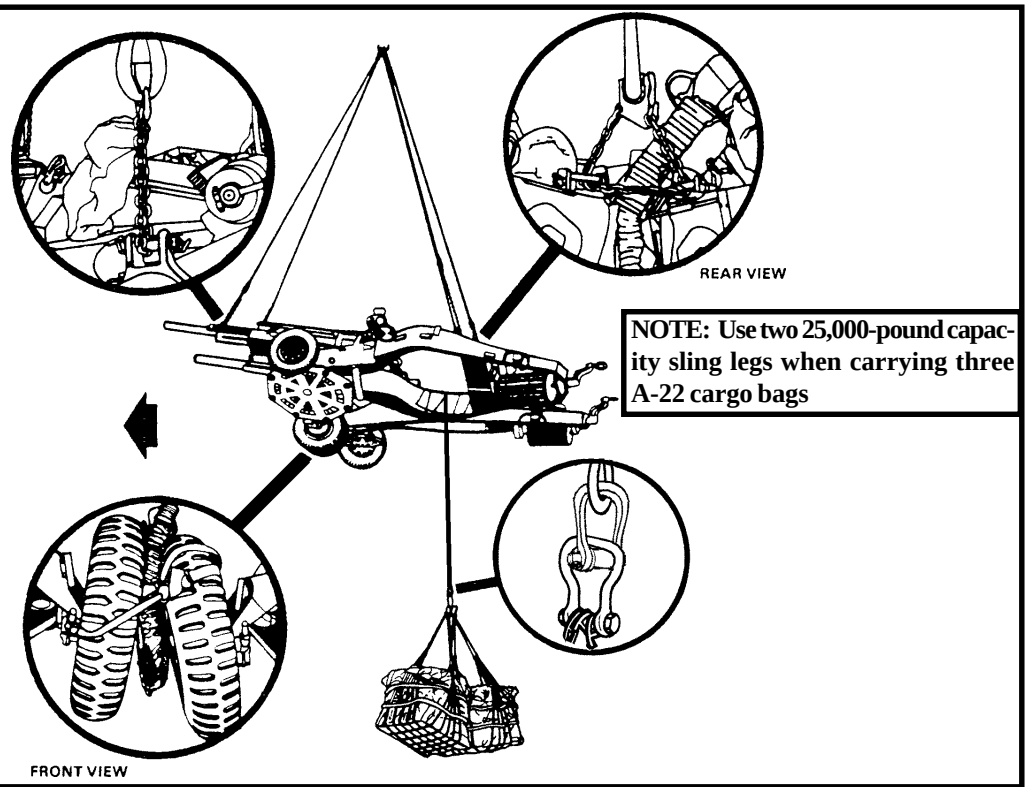


**NOTE: Use two 25,000-pound capacity sling legs when carrying three A-22 cargo bags**

**RIGGING STEPS**

**1.** Add the additional sling leg to the sling set. The outer sling legs are numbers 1 and 2, the inner sling legs are numbers 3 and 4, and the center sling leg is number 5.

**2.** Position the apex fitting on top of the inner wheels at the center of the load. Route outer sling legs 1and 2 to the barrels. Route inner sling legs 3 and 4 to the outside trails, and center sling leg 5 to the inside trails of both howitzers. Sling legs 1 and 3 must be connected to the left howitzer.

**3.** Route the chain end of sling leg 1 through the lift provision on the barrel of the left howitzer. Place the correct link from Table 6-6 in the grab hook. Repeat with sling leg 2 on the right howitzer. Secure the excess chain with Type III nylon cord

**4.** Route the chain end of sling leg 3 through the lift provision on the outside trail of the left howitzer. Place the correct link from Table 6-6 in the grab hook. Repeat with sling leg 4 on the right howitzer. Secure the excess chain with Type III nylon cord.

**5.** Route the chain end of sling leg 5 through the lift provisions on the inside trails of both howitzers. Place the correct link from Table 6-6 in the grab hook. Secure the excess chain with Type III nylon cord.

**6.** Cluster and tie or tape (breakaway technique) the sling legs together on top of the howitzers to prevent entanglement during hookup and lift-off.

**7.** Wrap the chain end of the sling leg(s) around both inboard trails over the felt sheets and insert link 60 in the grab hook. Secure the excess chain with Type III nylon cord.

**8.** Route the other end of the sling leg(s) under the outside trail of the howitzers and attach the additional apex fitting. Place the medium clevis of the A-22s on the bolt of the apex fitting.

***Figure 6-6. Two M102 105-MM Howitzers with One, Two, or Three A-22 Cargo Bags***

## 6-8. M119 105-MM Howitzer, Folded/Towed Position

**a. Applicability.** The following items in Table 6-7 are certified for all helicopters with suitable lift capacity by the US Army Soldier Systems Center:

**Table 6-7. M119 105-MM Howitzer, Folded/Towed Position**

| NOMENCLATURE | MAX WEIGHT (POUNDS) | SLING SET | LINK COUNT FRONT/REAR | RECOMMENDED AIRSPEED (KNOTS) |
|---|---|---|---|---|
| M119 Howitzer | 4,400 | 10K | 50/10 | 120 |
| M119 Howitzer with accompanying load | 7,400 | 25K | 40/10 | 120 |

**b. Materials.** The following materials are required to rig this load:

**(1)** Sling set (10,000-pound capacity) (when moving the howitzer without accompanying load).

**(2)** Sling set (25,000-pound capacity) (when moving the howitzer with an accompanying load).

**(3)** Tape, adhesive, pressure-sensitive, 2-inch wide roll.

**(4)** Cord, nylon, Type III, 550-pound breaking strength.

**(5)** Webbing, cotton, 1/4-inch, 80-pound breaking strength.

**(6)** Sling set chain safety clamp.

**(7)** Webbing, nylon, tubular, 1/2-inch (as required).

**(8)** Line, multiloop, Type XXVI, 4-loop, 3-foot.

**(9)** Clevis, suspension, medium (2 each).

**(10)** Bag, cargo A-22 or net, cargo (5,000- or 10,000-pound capacity).

**(11)** Apex fitting (10,000- or 25,000-pound capacity) (1 each).

**c. Personnel.** Two persons can prepare and rig this load in 30 minutes.

**d. Procedures.** The following procedures apply to this load:

**(1) Preparation.** Prepare the load using the following steps:

**(a)** Place the howitzer in the folded/towed position. Ensure the wheel knock-off hub is horizontal. Engage the right wheel parking brake (wheel with the knock-off hub).

**(b)** Secure the sight cover to the dial sight with tape or Type III nylon cord.

**(c)** Secure the firing platform, hand spike, and jack to the trail assembly with Type III nylon cord.

**(d)** Ensure the lunette is in the extended position. Install the towing eye stop (C-clamp) on the lunette and secure in place with its retaining pins, when applicable.

**(e)** The sling set chain safety clamp is an additional authorized item. Refer to TM 9-1015-252-10 for NSN and installation information.

**(f)** When the detachable field spade is attached, ensure the two locking pins are installed and locked. Route and tie a length of Type III nylon cord through the key ring of the cable and around the end of the locking pin.

**(2) Rigging.** Rig the load according to the steps in Figure 6-7.

**NOTE: When an accompanying load requires a sling leg, you may remove and use one of the inner sling legs from the sling set, leaving one sling leg attached to the lunette of the howitzer.**

**(3) Hookup.** The hookup team stands beside the howitzer on the trails. The static wand person discharges the

static electricity with the static wand. The hookup person places the apex fitting onto the aircraft cargo hook. The hookup team then moves clear of the helicopter but remains close to the load as the helicopter removes slack from the sling legs. When successful hookup is assured, the hookup team quickly exits the area underneath the helicopter to the designated rendezvous point.

**(4) Derigging.** Derigging is the reverse of the preparation and rigging procedures in steps d (1) and d (2).

**WARNING**
**When moving the howitzer with an accompanying load, the 25,000-pound capacity sling set must be used.**

**WARNING**
**Accompanying loads must not exceed the weight limits of the cargo net, cargo bag, sling leg, or exceed the lift capability of the helicopter.**

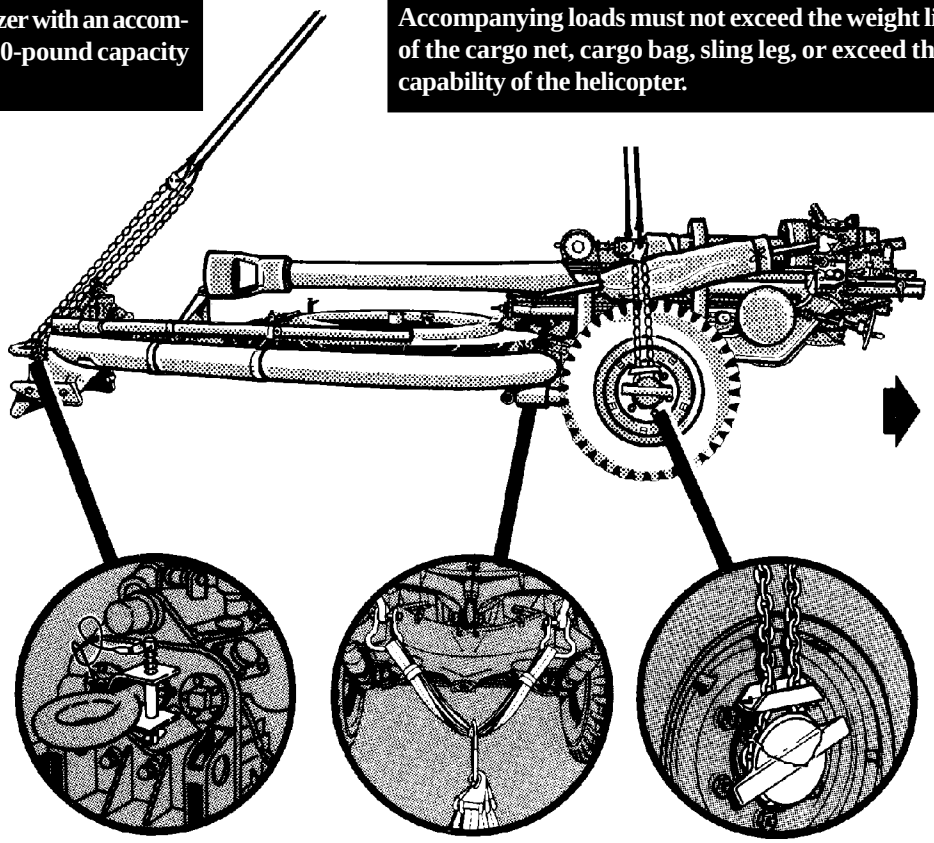

**RIGGING STEPS**

**1.** Position the apex fitting on the barrel over the firing platform. Route outer sling legs 1and 2 to the wheel hubs. Route inner sling legs 3 and 4 to the lunette. Sling legs 1 and 3 must be on the left side of the load.

**2.** Route the chain end of sling leg 1 around the left wheel hub. Place the link from Table 6-7 in the grab hook. Pull the chain taut and ensure the chain is centered on the hub. Install the sling set chain safety clamp on the two chain links closest to the top of the wheel hub. If using the 25,000-pound capacity sling set, tie the two chain links together with 1/2-inch tubular nylon webbing. Repeat with sling leg 2 on the right wheel hub. Secure the excess chain with Type III nylon cord.

**3.** Route the chain end of sling legs 3 and 4 through the lunette. Place the correct link from Table 6-7 in the grab hook.

**4.** Cluster and tie or tape (breakaway technique) the sling legs together on top of the howitzers to prevent entanglement during hookup and lift-off.

**5.** Attach the accompanying load by routing the 3-foot, 4-loop, Type XXVI multiloop line through the eye of the sling leg attached to an A-22 or the apex fitting of a cargo net. Place a medium suspension clevis through the loop on each end of the multiloop line and attach to the provisions located under the howitzer carriage and inboard of the wheels.

*Figure 6-7. M119 105-MM Howitzer, Folded/Towed Position*

## 6-9. M119 105-MM Howitzer, Forward/Firing Position

**a. Applicability.** The following items in Table 6-8 are certified for all helicopters with suitable lift capacity by the US Army Soldier Systems Center:

**Table 6-8. M119 105-MM Howitzer, Forward/Firing Position**

| NOMENCLATURE | MAX WEIGHT (POUNDS) | SLING SET | LINK COUNT FRONT/REAR | RECOMMENDED AIRSPEED (KNOTS) |
|---|---|---|---|---|
| M119 Howitzer | 4,400 | 10K | Listed in rigging steps | 110 |
| M119 Howitzer with accompanying load | 7,400 | 25K | Listed in rigging steps | 110 |

**b. Materials.** The following materials are required to rig this load:

**(1)** Sling set (10,000-pound capacity) (when moving the howitzer without accompanying load).

**(2)** Sling set (25,000-pound capacity) (when moving the howitzer with an accompanying load).

**(3)** Reach Pendant (11,000 or 25,000-pound capacity).

**(4)** Tape, adhesive, pressure-sensitive, 2-inch wide roll.

**(5)** Cord, nylon, Type III, 550-pound breaking strength.

**(6)** Webbing, cotton, 1/4-inch, 80-pound breaking strength.

**(7)** Sling set chain safety clamp.

**(8)** Webbing, nylon, tubular, 1/2-inch (as required).

**(9)** Line, multiloop, Type XXVI, 4-loop, 3-foot (for accompanying load).

**(10)** Clevis, suspension, medium (2 each) (for accompanying load).

**(11)** Bag, cargo A-22 or net, cargo (5,000- or 10,000-pound capacity).

**(12)** Chain length, part number 38850-00053-102, from a 25,000-pound capacity sling set (1 each) (for accompanying load).

**(13)** Coupling link, part number 664241, from a 25,000-pound capacity sling set (1 each) (for accompanying load).

**(14)** Strap, cargo, tiedown, CGU-1/B (as required).

**c. Personnel.** Two persons can prepare and rig this load in 30 minutes.

**d. Procedures.** The following procedures apply to this load:

**(1) Preparation.** Prepare the load using the following steps:

**(a)** Place the howitzer in the forward/firing position. If the firing platform is to be carried in the down position, follow these steps:

**1** Mark the wheel hubs at the center of gravity (CG) with tape. The CG is located 6-inches behind (towards the lunette) the center of the hub.

**2** Mark the center of the firing platform with tape. Roll the howitzer onto the firing platform aligning the tape strips. The wheel knock-off hub must be horizontal. Engage both parking brakes.

**3** Connect the firing platform to the weapon and add an additional CGU-1/B tiedown strap.

**(b)** When the firing platform is carried on top of the trails ensure the wheel knock-off hub is horizontal. Engage the right wheel parking brakes.

**(c)** Secure the sight cover to the dial sight with tape

or Type III nylon cord.

**(d)** Secure the firing platform (if carried), hand spike, and jack to the trail assembly with Type III nylon cord.

**(e)** Ensure the lunette is in the extended position. Install the towing eye stop (C-clamp) on the lunette and secure in place with its retaining pins, when applicable.

**(f)** The sling set chain safety clamp is an additional authorized item. Refer to TM 9-1015-252-10 for NSN and installation information.

**(g)** When the detachable field spade is attached to the permanent spades, ensure the two locking pins are installed and locked. Route and tie a length of Type III nylon cord through the key ring of the cable and around the end of the locking pin.

**(h)** When moving the howitzer without an accompanying load, extend the chain on sling leg 3 by removing the chain length and coupling link from sling leg 4 and attaching them to the end of the chain on sling leg 3.

**(i)** When moving the howitzer with an accompanying load and using sling leg 4 on the accompanying load, extend the chain on sling leg 3 by adding an additional length of chain with a coupling link from a 25,000-pound capacity sling set.

**(2) Rigging.** Rig the load according to the steps in Figure 6-8.

**NOTE: When an accompanying load requires a sling leg, you may remove and use one of the inner sling legs from the sling set, leaving one sling leg attached to the lunette of the howitzer.**

**(3) Hookup.** The hookup team stands beside the howitzer on the trails. The static wand person discharges the static electricity with the static wand. The hookup person places the top loop of the reach pendant onto the aircraft cargo hook. The hookup team then moves clear of the helicopter but remains close to the load as the helicopter removes slack from the sling legs. When successful hookup is assured, the hookup team quickly exits the area underneath the helicopter to the designated rendezvous point.

**(4) Derigging.** Derigging is the reverse of the preparation and rigging procedures in steps d (1) and d (2).

**WARNING**
**When moving the howitzer with an accompanying load, the 25,000-pound capacity sling set must be used.**

**WARNING**
**Accompanying loads must not exceed the weight limits of the cargo net, cargo bag, sling leg, or exceed the lift capability of the helicopter.**

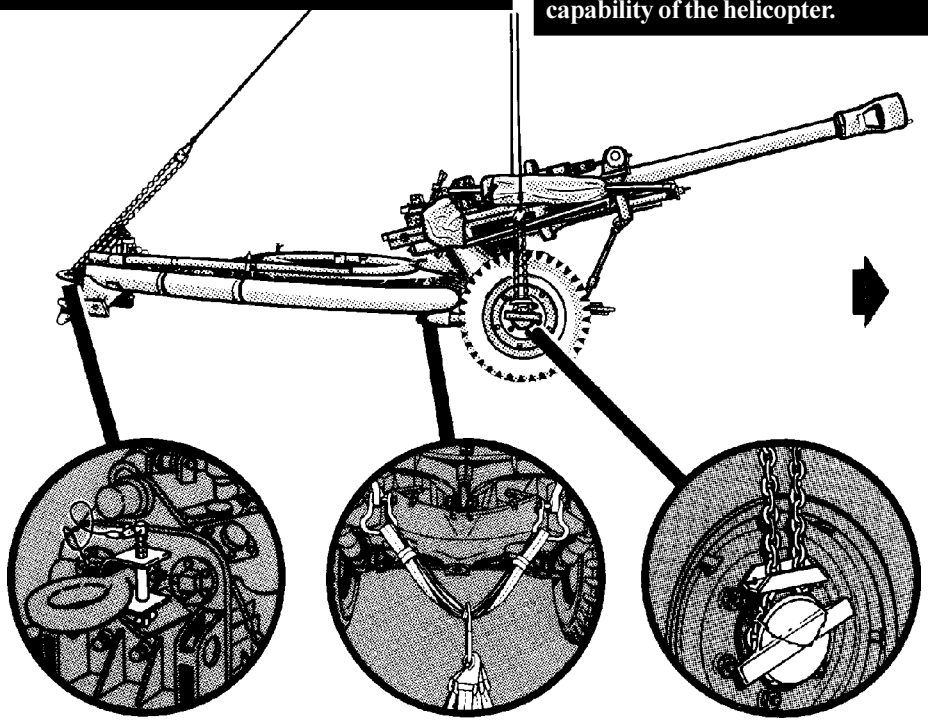

**RIGGING STEPS**

**1.** Attach a reach pendant on the sling set apex fitting.

**2.** Position the apex fitting and the reach pendant on the breech assembly. Route outer sling legs 1and 2 to the wheel hubs. Route inner sling leg 3 to the lunette.

**3.** Route the chain end of sling leg 1 around the left wheel hub. Place link **50** (when using the 10,000-pound capacity sling set) or link **40** (when using the 25,000-pound capacity sling set) in the grab hook. Pull the chain taut and ensure the chain is centered on the hub. Install the sling set chain safety clamp on the two chain links closest to the top of the wheel hub. If the sling set chain safety clamp is unavailable or if the 25,000-pound capacity sling set is being used, tie the two chain links together with 1/2-inch tubular nylon webbing. Repeat with sling leg 2 on the right wheel hub. Place link **55** (when using the 10,000-pound capacity sling set) or link **45** (when using the 25,000-pound capaclity sling set) in the grabhook. Secure the excess chain with Type III nylon cord.

**4.** Route the chain end of the extended sling leg 3 through the lunette. Place link **35** (when using the 10,000-pound capacity sling set) or link **28** (when using the 25,000-pound capaclity sling set) in the grab hook. Secure the excess chain with Type III nylon cord

**5.** Cluster and tie or tape (breakaway technique) the sling legs together on top of the howitzers to prevent entanglement during hookup and lift-off.

**6.** Attach the accompanying load (if required) by routing the 3-foot, 4-loop, Type XXVI multiloop line through the eye of the sling leg attached to an A-22 or the apex fitting of a cargo net. Place a medium suspension clevis through the loop on each end of the multiloop line and attach to the provisions located under the howitzer carriage and inboard of the wheels.

*Figure 6-8. M119 105-MM Howitzer, Forward/Firing Position*

## 6-9.1. M119, 105-MM Howitzer, Forward/Firing Position, Platform Down, with Additional Boxes of Ammunition

**a. Applicability.** The following items in Table 6-8.1 are certified for all helicopters with suitable lift capacity by the US Army Soldier Systems Center:

**Table 6-8.1. M119 105-MM Howitzer, Forward/Firing Position, Platform Down**

| NOMENCLATURE | MAX WEIGHT (POUNDS) | SLING SET | LINK COUNT FRONT/REAR | RECOMMENDED AIRSPEED (KNOTS) |
|---|---|---|---|---|
| M119 Howitzer with Two Boxes of Ammunition on Firing Platform | 4,850 | 10K | Listed in rigging steps | 80 |
| M119 Howitzer with Two Boxes of Ammunition on Firing Platform and Ammunition in A/22 or Cargo Net | 7,500 | 25K | Listed in rigging steps | 110 |

**WARNINGS**

1. **The ammunition boxes must be securely lashed to the firing platform.**
2. **When using the A/22 cargo bag for an accompanying load do not exceed 2,200 pounds.**
3. **When using the cargo net for an accompanying load do not exceed 2,650 pounds.**

**b. Materials.** The following materials are required to rig this load:

**(1)** Sling set (10,000-pound capacity) (when moving the howitzer without A/22 or cargo net).

**OR**

**(2)** Sling set (25,000-pound capacity) (when moving the howitzer with an A/22 or cargo net).

**(3)** Reach Pendant (11,000 or 25,000-pound capacity).

**(4)** Tape, adhesive, pressure-sensitive, 2-inch wide roll.

**(5)** Cord, nylon, Type III, 550-pound breaking strength.

**(6)** Webbing, cotton, 1/4-inch, 80-pound breaking strength.

**(7)** Sling set chain safety clamp is an authorized item. Refer to TM 9-1015-252-10 for NSN and installation information. Also authorized is the Suncor Stainless 316 precision cast, heavy duty Jaw and Swivel device, Item # S0156-HD008 ( for use with 10K and 25K sling sets) or a safety clamp (Picatinny Arsenal Part # 12591189; Cage Code 19200) designed for the 25K sling set .

**(9)** Line, multiloop, Type XXVI, 4-loop, 3-foot (for accompanying load).

**(10)** Clevis, suspension, medium (2 each) (for A/22 or cargo net).

**(11)** Bag, cargo A/22 or net, cargo (5,000- or 10,000-pound capacity).

**(12)** Chain length, part number 38850-00053-102, from a 25,000-pound capacity sling set (1 each) (for A/22 or cargo net).

**(13)** Coupling link, part number 664241, from a 25,000-pound capacity sling set (1 each)(for A/22 or cargo net).

**(14)** Strap, cargo, tiedown, CGU-1/B (as required).

**c. Personnel.** Two persons can prepare and rig this load in 30 minutes.

**d. Procedures.** The following procedures apply to this load:

**(1) Preparation.** Prepare the load using the following steps:

**(a)** Place the howitzer in the forward/firing position. If the firing platform is to be carried in the down position, follow these steps:

**1** Mark the wheel hubs with tape at the center of gravity (CG). The CG is located 6 inches behind (towards the lunette) the center of the hub.

**2** Mark the center of the firing platform along the length (lunette to muzzle) and width (side to side) with strips of tape. Ensure the hand holes (used to secure the ammunition boxes) are equally spaced on either side of the long axis of the gun.

**3** Roll the howitzer onto the firing platform. Align the CG masking tape with the side to side tape strips. The wheel knock-off hub must be horizontal. Engage both parking brakes.

**4** Connect the firing platform to the weapon. Tie the ammunition boxes together with Type III nylon cord. Secure the two ammunition boxes (if carried) by routing a CGU-1/B tiedown strap through the platform hand holes and the carrying handles of each box. Pad the CGU-1/B where it rubs on the boxes and platform.

**5** Pad and tape the trailing edge of the platform when carrying an accompanying load in an A/22 cargo bag or a cargo net.

**(b)** Secure the sight cover to the dial sight with tape or Type III nylon cord.

**(c)** Secure the firing platform (if carried), hand spike, and jack to the trail assembly with Type III nylon cord.

**(d)** When the detachable field spade is attached to the permanent spades, ensure the two locking pins are installed and locked. Route and tie a length of Type III nylon cord through the key ring of the cable and around the end of the locking pin.

**(e)** When moving the howitzer without an A/22 cargo bag or a cargo net load, extend the chain on sling leg 3 by removing the chain length and coupling link from sling leg 4 and attaching them to the end of the chain on sling leg 3.

**(f)** When moving the howitzer with an accompanying load and using sling leg 4 on the accompanying load, extend the chain on sling leg 3 by adding an additional length of chain with a coupling link from a 25,000-pound capacity sling set.

**(2) Rigging.** Rig the load according to the steps in Figure 6-8.1.

**NOTE: When an accompanying load requires a sling leg, you may remove and use one of the inner sling legs from the sling set, leaving one sling leg attached to the lunette of the howitzer.**

**(3) Hookup.** The hookup team stands on the howitzer or on the trails. The static wand person discharges the static electricity with the static wand. The hookup person places the top loop of the reach pendant onto the aircraft cargo hook. The hookup team then moves clear of the helicopter but remains close to the load as the helicopter removes slack from the sling legs. When successful hookup is assured, the hookup team quickly exits the area underneath the helicopter to the designated rendezvous point.

**(4) Derigging.** Derigging is the reverse of the preparation and rigging procedures in steps d (1) and d (2).

**WARNING**
**When moving the howitzer with an accompanying load, the 25,000-pound capacity sling set must be used.**

**WARNING**
**Accompanying loads must not exceed the weight limits of the cargo net, cargo bag, sling leg, or exceed the lift capability of the helicopter.**

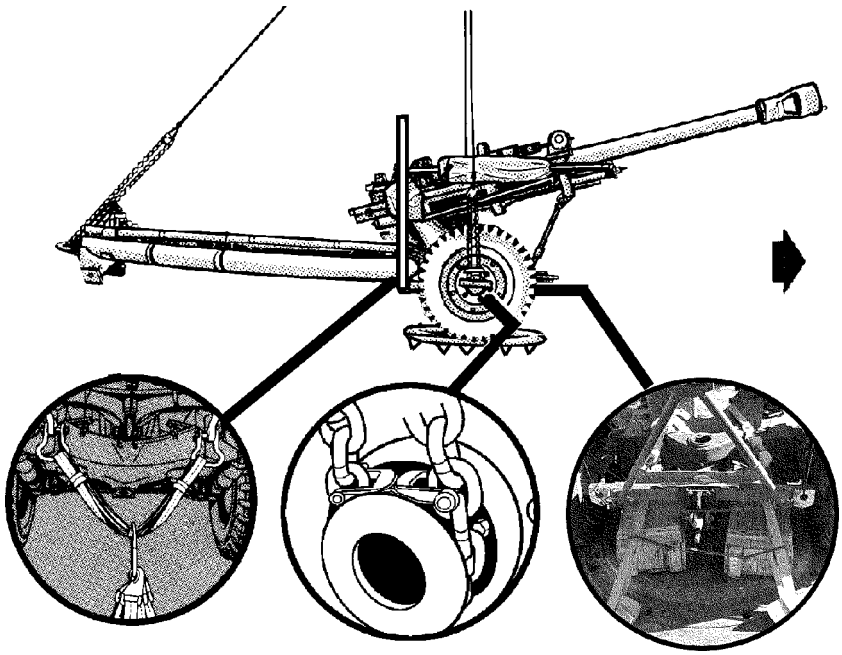

**RIGGING STEPS**

**1.** Attach a reach pendant on the sling set apex fitting.

**2.** Position the apex fitting and the reach pendant on the breech assembly. Route outer sling legs 1and 2 to the wheel hubs. Route inner sling leg 3 to the lunette.

**3.** Route the chain end of sling leg 1 around the left wheel hub (looking at the howitzer from the lunette). Place link **50** (when using the 10,000-pound capacity sling set) or link **40** (when using the 25,000-pound capacity sling set) in the grab hook. Pull the chain taut and ensure the chain is centered on the hub. Install the sling set chain safety clamp on the two chain links closest to the top of the wheel hub. If the sling set chain safety clamp is unavailable, tie the two chain links together with 1/2-inch tubular nylon webbing. Repeat with sling leg 2 on the right (knock-off) wheel hub. Place link **55** (when using the 10,000-pound capacity sling set) or link **45** (when using the 25,000-pound capaclity sling set) in the grabhook. Secure the excess chain with Type III nylon cord.

**4.** Route the chain end of the extended sling leg 3 through the lunette. Place link **35** (when using the 10,000-pound capacity sling set) or link **28** (when using the 25,000-pound capaclity sling set) in the grab hook. Secure the excess chain with Type III nylon cord

**5.** Cluster and tie or tape (breakaway technique) the sling legs together on top of the howitzers to prevent entanglement during hookup and lift-off.

**6.** Attach the accompanying load (if required) by routing the 3-foot, 4-loop, Type XXVI multiloop line through the eye of the sling leg attached to an A-22 or the apex fitting of a cargo net. Place a medium suspension clevis through the loop on each end of the multiloop line and attach to the provisions located under the howitzer carriage and inboard of the wheels.

*Figure 6-8.1. M119 105-MM Howitzer, Forward/Firing Position, Platform Down*

## 6-10. M114A2 155-MM Howitzer, Towed

**a. Applicability.** The following item in Table 6-9 is certified for all helicopters with suitable lift capacity by the US Army Natick Research, Development, and Engineering Center:

**Table 6-9. M114A2 155-MM Howitzer, Towed**

| NOMENCLATURE | MAX WEIGHT (POUNDS) | SLING SET | LINK COUNT FRONT/REAR | RECOMMENDED AIRSPEED (KNOTS) |
|---|---|---|---|---|
| M114A2 Howitzer | 12,700 | 40K | 50/10 | 110 |

**b. Materials.** The following materials are required to rig this load:

**(1)** Sling set (40,000-pound capacity) with two additional 8-foot chain lengths and coupling links.

**(2)** Tape, adhesive, pressure-sensitive, 2-inch wide roll.

**(3)** Cord, nylon, Type III, 550-pound breaking strength.

**(4)** Webbing, cotton, 1/4-inch, 80-pound breaking strength.

**(5)** Felt sheet, cattle hair, Type IV, 1/2-inch or suitable substitute.

**(6)** Tie-down strap, cargo, CGU-1/B (2 each).

**c. Personnel.** Two persons can prepare and rig this load in 15 minutes.

**d. Procedures.** The following procedures apply to this load:

**(1) Preparation.** Prepare the load using the following steps:

**(a)** Stow all howitzer equipment, including sights, in the proper place, except the spade key. Stow the spade key in the section chest. Secure all equipment with tape or Type III nylon cord.

**(b)** Position the section chest on the rear of the trails.

**(c)** Secure the section chest to the trails by routing the tie-down strap through the handles of the chest and both trail lifting handles.

**(d)** Secure the spades to the brackets with Type III nylon cord. Secure all hoses and cables to the sides of the trails with tape or Type III nylon cord.

**(e)** Engage one parking brake.

**(f)** Pad the barrel forward of the recoil mechanism. Ensure all sight mounts are removed or padded. Ensure the gun jack pin is locked in place.

**(g)** Remove or secure all gun covers.

**(2) Rigging.** Rig the load according to the steps in Figure 6-9.

**(3) Hookup.** The hookup team stands on the wheels or on the firing platform. The static wand person discharges the static electricity with the static wand. The hookup person places the apex fitting onto the aircraft cargo hook. The hookup team then moves clear of the helicopter but remains close to the load as the helicopter removes slack from the sling legs. When successful hookup is assured, the hookup team quickly exits the area underneath the helicopter to the designated rendezvous point.

**(4) Derigging.** Derigging is the reverse of the preparation and rigging procedures in steps d (1) and d (2).

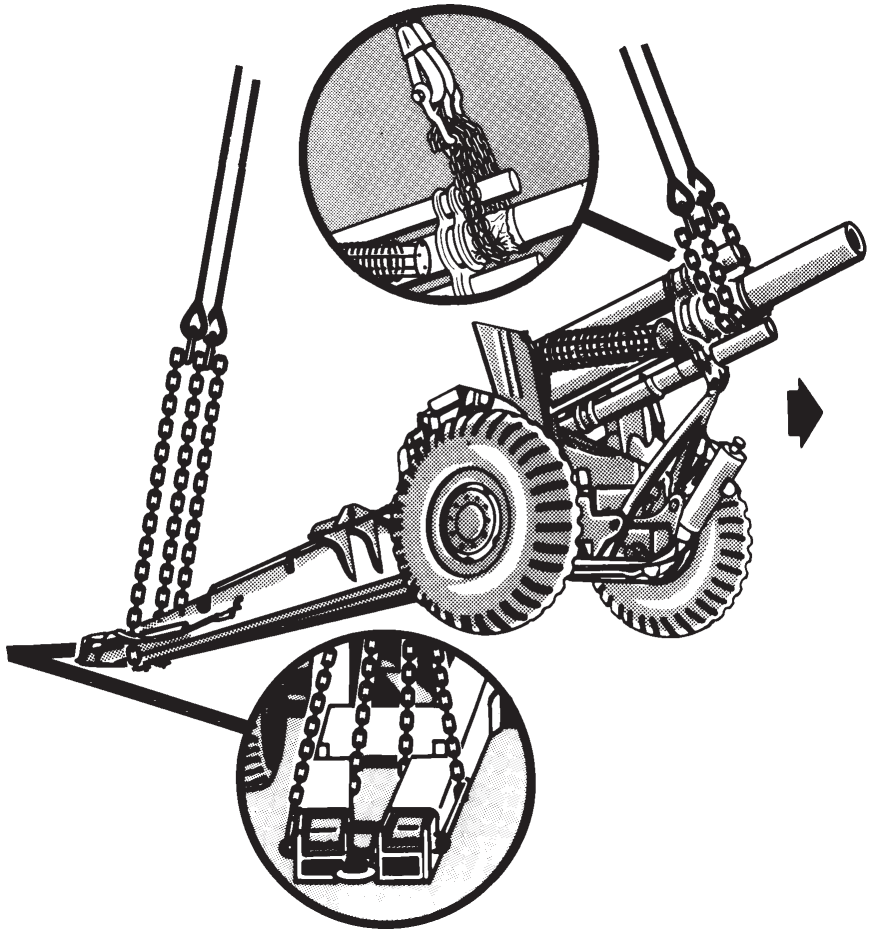

**RIGGING STEPS**

**1.** Position the apex fitting on the breech assembly. Route outer sling legs 1and 2 to the barrel. Route inner sling legs 3 and 4 to the trail. Sling legs 1 and 3 must be on the left side of the load. Attach the additional chain lengths to sling legs 3 and 4 using the coupling links.

**2.** Position the grab link of sling leg 1 on the left side of the gun tube padded area. Route the chain end under the tube and back up to the grab link. Place the correct link from Table 6-9 in the grab hook. Repeat with sling leg 2 with the grab link on the right side of the gun tube. Secure the excess chain with Type III nylon cord

**3.** Route the chain end of sling leg 3 down through the spade key bracket on the outboard side of the left trail, under the trail, and up the inboard side of the trail. Place the correct link from Table 6-9 in the grab hook. Repeat with sling leg 4 on the right trail.

**4.** Cluster and tie or tape (breakaway technique) the sling legs together on top of the howitzers to prevent entanglement during hookup and lift-off.

*Figure 6-9. M114A2 155-MM Howitzer, Towed*

## 6-11. M198 155-MM Howitzer, Towed/Stowed

**a. Applicability.** The following items in Table 6-10 are certified for all helicopters with suitable lift capacity by the US Army Natick Research, Development, and Engineering Center:

**Table 6-10. M198 155-MM Howitzer, Towed/Stowed**

| NOMENCLATURE | MAX WEIGHT (POUNDS) | SLING SET | LINK COUNT FRONT/REAR | RECOMMENDED AIRSPEED (KNOTS) |
|---|---|---|---|---|
| M198 Howitzer in towed position | 15,740 | 25K | 50/3 | 110 |
| M198 Howitzer in stowed position | 15,740 | 25K | 70/3 | 110 |

**b. Materials.** The following materials are required to rig this load:

**(1)** Sling set (25,000-pound capacity) with two additional 8-foot chain lengths and coupling links.

**(2)** Tape, adhesive, pressure-sensitive, 2-inch wide roll.

**(3)** Cord, nylon, Type III, 550-pound breaking strength.

**(4)** Webbing, cotton, 1/4-inch, 80-pound breaking strength.

**(5)** Felt sheet, cattle hair, Type IV, 1/2-inch or suitable substitute.

**(6)** Tie-down strap, cargo, CGU-1/B (2 each).

**(7)** Clevis assembly, suspension, large, one per lift provision.

**(8)** Reach pendant (25,000-pound capacity) required for sling loading in the towed position.

**c. Personnel.** Two persons can prepare and rig this load in 20 minutes.

**d. Procedures.** The following procedures apply to this load:

**(1) Preparation.** Prepare the load using the following steps:

**(a)** Secure the spades to the trails with the tie-down straps.

**(b)** Secure all hoses and cables to the outboard side of the right trail with tape or Type III nylon cord.

**(c)** Pad the sight mounts and secure the padding with tape or Type III nylon cord.

**(d)** Attach a large clevis assembly to the trail lift provisions located forward of the stowed firing baseplate.

**(e)** Ensure the top carriage locking pin is in place and is secured with a locking safety clip for the towed position.

**CAUTION:**
**Do not attempt to lift the howitzer if the top carriage lock pin will not drop into place or if the locking safetyclip is missing. Either of these conditions could result in the top carriage rotating in flight.**

**(f)** Position the barrel and install the travel lock; secure with the pins for the towed position.

**(g)** Attach a large clevis assembly to the lift provision on each side of the carriage for the towed position.

**(h)** Attach a large clevis assembly to the two lift provisions located at the upper end of the equilibrator for the towed position.

**(2) Rigging.** Rig the load according to the steps in Figure 6-10.

**NOTE: Hookup of this load presents substantial risk of damage to the load or injury to the hookup personnel. Use of a reach pendant is recommended for this load.**

**(3) Hookup.** The hookup team stands on the carriage.

**NOTE: The helicopter must approach the howitzer over the trails.**

The static wand person discharges the static electricity with the static wand. The hookup person places the apex fitting onto the aircraft cargo hook. The hookup team then moves clear of the helicopter but remains close to the load as the helicopter removes slack from the sling legs. When successful hookup is assured, the hookup team quickly exits the area underneath the helicopter to the designated rendezvous point.

**(4) Derigging.** Derigging is the reverse of the preparation and rigging procedures in steps d (1) and d (2).

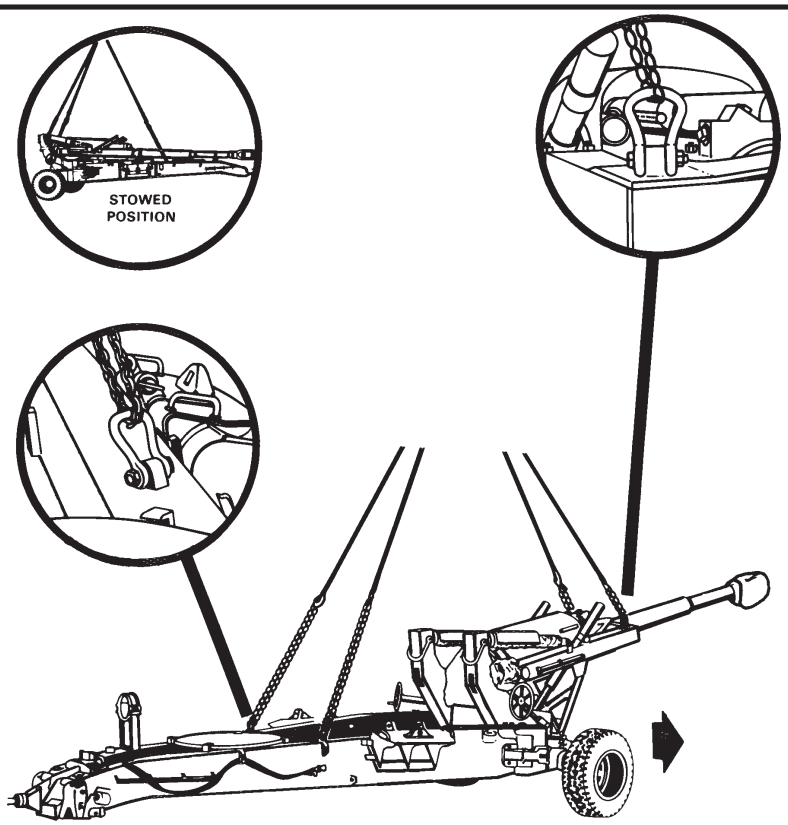


**RIGGING STEPS (TOWED POSITION)**

**1.** Install the 25,000-pound capacity reach pendant on the bolt of the apex fitting. Position the reach pendant and apex fitting on top of the breech block. Route outer sling legs 1and 2 to the front of the carriage. Route inner sling legs 3 and 4 to the trails. Sling legs 1 and 3 must be on the left side of the load. Attach the additional chain lengths to sling legs 3 and 4 using the coupling links.

**2.** Route the chain end of sling leg 1 through the clevis on the lifting provision on the left side of the carriage assembly. Place the correct link from Table 6-10 in the grab hook. Repeat with sling leg 2 and the right front lift provision on the right side of the carriage. Secure the excess chain with Type III nylon cord

*Figure 6-10. M198 155-MM Howitzer, Towed/Stowed*

**3.** Route the chain end of sling leg 3 through the clevis on the lift provision on top of the left trail. Place the correct link from Table 6-10 in the grab hook. Repeat with sling leg 4 on the right trail.

**4.** Cluster and tie or tape (breakaway technique) the sling legs together on top of the howitzers to prevent entanglement during hookup and lift-off.

**RIGGING STEPS (STOWED POSITION)**

**1.** Position the apex fitting on top of the barrel centered on the load. Route outer sling legs 1and 2 to the trails. Route inner sling legs 3 and 4 to the breech end. Sling legs 1 and 3 must be on the left side of the load. Attach the additional chain lengths to sling legs 1 and 2 using the coupling links.

**2.** Route the chain end of sling leg 1 through the clevis on the left trail. Place the correct link from Table 6-10 in the grab hook. Repeat with sling leg 2 and the right trail.

**3.** Route the chain end of sling leg 3 through the clevis on the left side of the equilibrator above the breech. Place the correct link from Table 6-10 in the grab hook. Repeat with sling leg 4 on the right side. Secure the excess chain with Type III nylon cord.

**4.** Cluster and tie or tape (breakaway technique) the sling legs together on top of the howitzers to prevent entanglement during hookup and lift-off.

*Figure 6-10. M198 155-MM Howitzer, Towed/Stowed (continued)*

## 6-12. Two M101A1 155-MM Howitzers

**a. Applicability.** The following items in Table 6-11 are certified for all helicopters with suitable lift capacity by the US Army Natick Research, Development, and Engineering Center:

**Table 6-11. Two M101A1 155-MM Howitzers**

| NOMENCLATURE | MAX WEIGHT (POUNDS) | SLING SET | LINK COUNT FRONT/REAR | RECOMMENDED AIRSPEED (KNOTS) |
|---|---|---|---|---|
| Two M101A1 Howitzers | 9,960 | 40K | Listed in rigging instructions | 100 |

**b. Materials.** The following materials are required to rig this load:

**(1)** Sling set (40,000-pound capacity) with two additional chain lengths and coupling links for the sling set being used.

**(2)** Tape, adhesive, pressure-sensitive, 2-inch wide roll.

**(3)** Cord, nylon, Type III, 550-pound breaking strength.

**(4)** Webbing, cotton, 1/4-inch, 80-pound breaking strength.

**(5)** Felt sheet, cattle hair, Type IV, 1/2-inch or suitable substitute.

**(6)** Tie-down strap, cargo, CGU-1/B (as required).

**(7)** Pad, energy-dissipating, 24- x 24-inch (2 each) or 4- x 4- x 24-inch lumber (2 each).

**c. Personnel.** Two persons can prepare and rig this load in 15 minutes.

**d. Procedures.** The following procedures apply to this load:

**(1) Preparation.** Prepare the load using the following steps:

**NOTE: The howitzer with the gun tube facing in the direction of flight is designated as howitzer 1.**

**(a)** Position the howitzers side by side with the gun tubes facing in opposite directions. Howitzer 1 is on the left side facing forward and howitzer 2 is on the right side facing aft.

**(b)** Ensure the trails are secured. Rotate the lunette to the down position. Secure the trail closing lock handles with Type III nylon cord or tape.

**(c)** Place honeycomb between the right wheel of howitzer 1 and the right trail of howitzer 2. Route two CGU-1/B cargo tie-down straps through the top of the wheel rim, out the bottom of the rim, and around the honeycomb and trail of howitzer 2. Repeat with the right wheel of howitzer 2 and the right trail of howitzer 1.

**(d)** Ratchet the howitzers together as securely as possible. Add more straps as required. A minimum of two straps per wheel is required.

**(e)** Close and lock the breech of each gun. Secure or remove the muzzle, breech, and tube covers. Remove or pad the sight mounts.

**(f)** Place the gun section equipment chest on the trails and secure it with CGU-1/B tie-down straps.

**(g)** Pad the gun tubes above the cradles and around the forward edge of the recoil damper assemblies. Secure the padding with tape or Type III nylon cord.

**(h)** Pad the gun trails on both howitzers aft of the traveling lock shaft area.

**(i)** Set the hand brakes.

**(2) Rigging.** Rig the load according to the steps in Figure 6-11.

**(3) Hookup.** The hookup team stands alongside the howitzer or on top of the trails. The static wand person discharges the static electricity with the static wand. The hookup person places the apex fitting onto the aircraft cargo hook. The hookup team then moves clear of the helicopter but remains close to the load as the helicopter removes slack from the sling legs. When successful hookup is assured, the hookup team quickly exits the area underneath the helicopter to the designated rendezvous point.

**(4) Derigging.** Derigging is the reverse of the preparation and rigging procedures in steps d (1) and d (2).

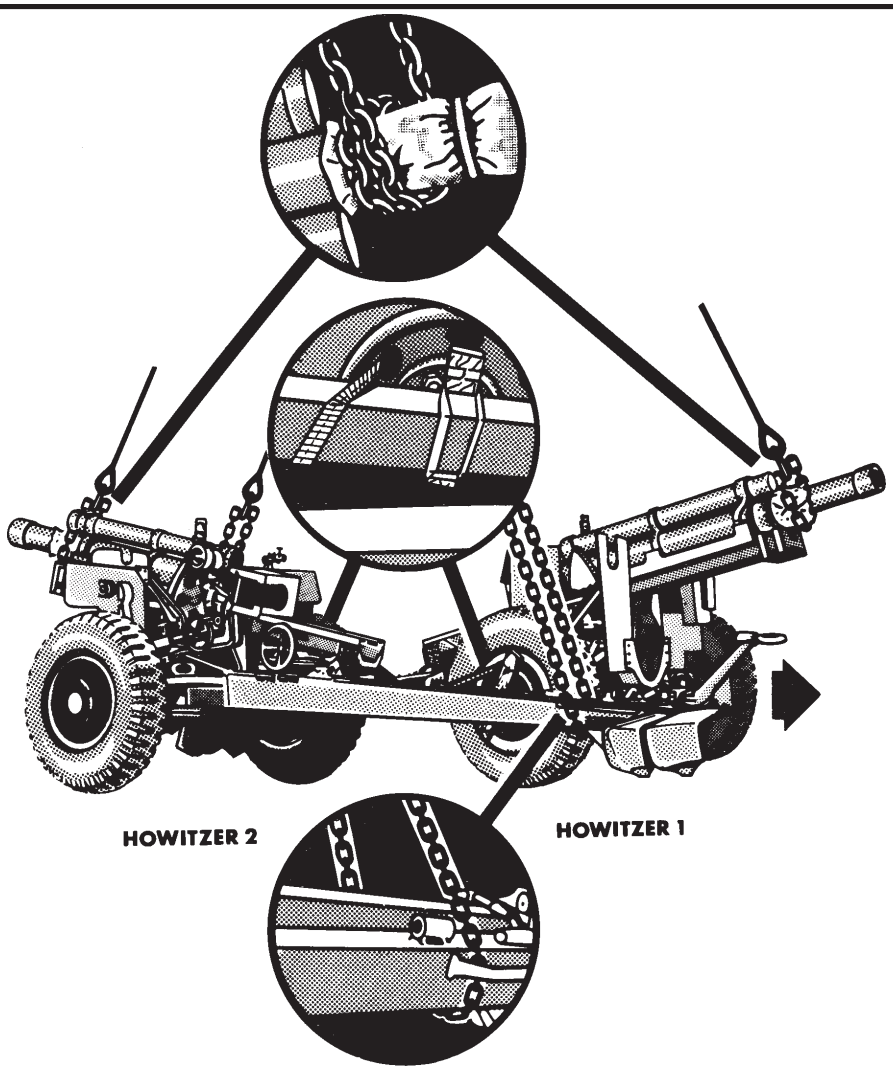


**RIGGING STEPS**

**1.** Position the apex fitting between the breech area of the two howitzers. Route outer sling leg 1 to the barrel end of howitzer 1. Route outer sling leg 2 to the trail end of howitzer 2. Route inner sling leg 3 to the trail end of howitzer 1. Route inner sling leg 4 to the to the barrel end of howitzer 2. Sling legs 1 and 3 must be on the left side of the load. Attach the additional chain lengths to sling legs 2 and 3 using the coupling links.

**2.** Wrap the chain end of sling leg 1 once around the padding on the barrel of howitzer 1 and insert link 30 in the grab link. Repeat with sling leg 2 on the barrel end of howitzer 2. Secure the excess chain with Type III nylon cord.

**3.** Wrap the chain end of sling leg 2 around the padded area on the trail end of howitzer 2 and insert link 55 in the grab link. Repeat with sling leg 3 and the trails on howitzer 1. Secure the excess chain with Type III nylon cord.

**4.** Cluster and tie or tape (breakaway technique) the sling legs together on top of the howitzers to prevent entanglement during hookup and lift-off.

*Figure 6-11. Two M101A1 155-MM Howitzers*

## 6-13. M167 20-MM AA Gun (Vulcan) with or without one A-22 Cargo Bag

**a. Applicability.** The following items in Table 6-12 are certified for all helicopters with suitable lift capacity by the US Army Natick Research, Development, and Engineering Center:

**Table 6-12. M167 20-MM AA Gun (Vulcan)**

| NOMENCLATURE | MAX WEIGHT (POUNDS) | SLING SET | LINK COUNT FRONT/REAR | RECOMMENDED AIRSPEED (KNOTS) |
|---|---|---|---|---|
| M167 Vulcan | 3,260 | 10K | 33/3 | 80 |
| M167 Vulcan with one A-22 Cargo Bag | 5,460 | 10K | 33/3 | 80 |

**b. Materials.** The following materials are required to rig this load:

**(1)** Sling set (10,000-pound capacity).

**(2)** Sling leg assembly from a 10,000-pound capacity sling set (if required).

**(3)** Bag, cargo, aerial delivery, A-22 (1 each) (if required).

**(4)** Fitting, apex (10,000-pound capacity) (1 each) (if required).

**(5)** Tape, adhesive, pressure-sensitive, 2-inch wide roll.

**(6)** Cord, nylon, Type III, 550-pound breaking strength.

**(7)** Webbing, cotton, 1/4-inch, 80-pound breaking strength.

**(8)** Felt sheet, cattle hair, Type IV, 1/2-inch or suitable substitute.

**c. Personnel.** Two persons can prepare and rig this load in 30 minutes.

**d. Procedures.** The following procedures apply to this load:

**(1) Preparation.** Prepare the load using the following steps:

**(a)** Pad the horizontal brace aft of the generator. Secure the padding with tape or Type III nylon cord.

**(b)** Point the radar antenna assembly directly upward.

**(c)** Place the cover on the gun and secure it with Type III nylon cord.

**(d)** Secure all loose equipment with tape or Type III nylon cord.

**(e)** Engage one parking brake. Install lifting clevises on the tongue on trails.

**(f)** Extend and secure the rear trails in the down position.

**(2) Rigging.** Rig the load according to the steps in Figure 6-12.

**(3) Hookup.** The hookup team stands alongside the gun or on the trailer frame on the same side as the radar dish. The static wand person discharges the static electricity with the static wand. The hookup person places the apex fitting onto the aircraft cargo hook. The hookup team then moves clear of the helicopter but remains close to the load as the helicopter removes slack from the sling legs. When successful hookup is assured, the hookup team quickly exits the area underneath the helicopter to the designated rendezvous point.

**(4) Derigging.** Derigging is the reverse of the preparation and rigging procedures in steps d (1) and d (2).

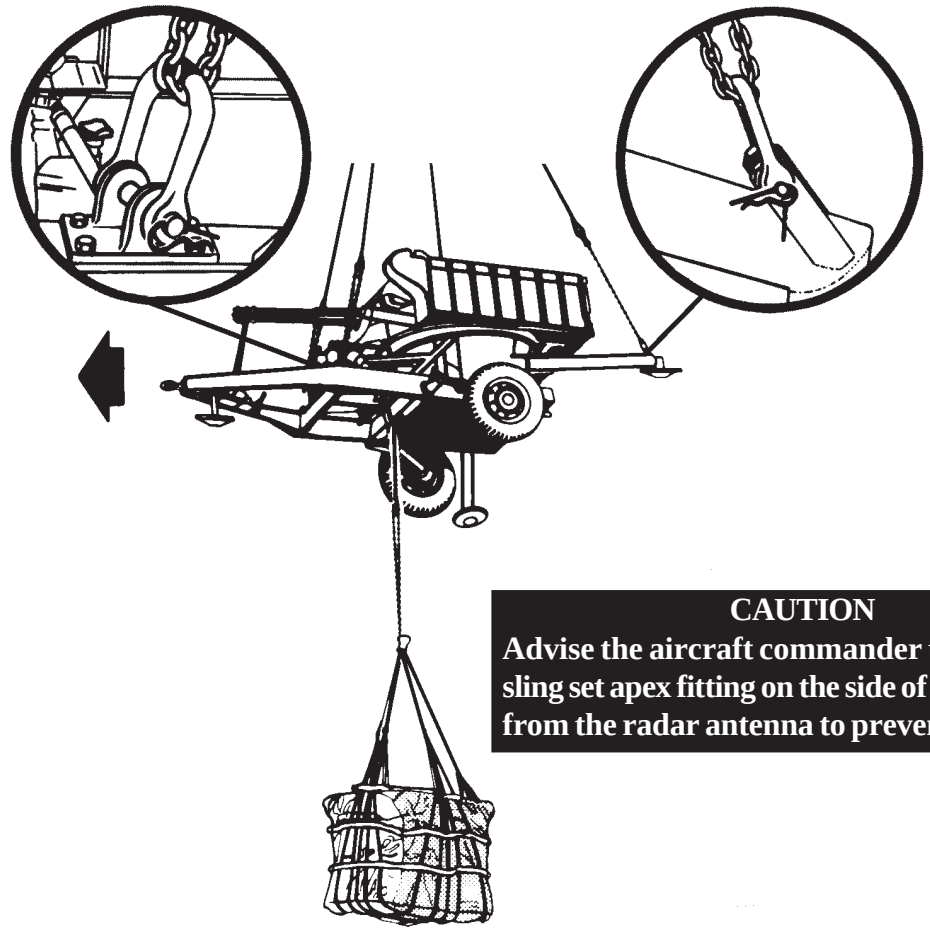

**CAUTION**

**Advise the aircraft commander to release the sling set apex fitting on the side of the gun away from the radar antenna to prevent damage.**

**RIGGING STEPS**

**1.** Position the apex fitting on top of the gun. Route outer sling legs 1and 2 to the rear extended trails. Route inner sling legs 3 and 4 to the tongue end. Sling legs 1 and 3 must be on the left side of the load. Sling legs 1 and 2 are on the rear of the load.

**2.** Route the chain end of sling leg 1 through the lift provision on the left trail. Place the correct link from Table 6-12 in the grab hook. Repeat with sling leg 2 and the right trail.

**3.** Route the chain end of sling leg 3 through the lift provision on top of the left side of the tongue. Place the correct link from Table 6-12 in the grab hook. Repeat with sling leg 4 on the tongue right side lift provision. Secure the excess chain with Type III nylon cord.

**4.** Cluster and tie or tape (breakaway technique) the sling legs together on top of the howitzers to prevent entanglement during hookup and lift-off.

**5.** Place the separate apex fitting on the additional apex fitting. Place the apex fitting around the padded area on the horizontal strut. (The apex fitting pin must face up.)

**6.** Route the sling leg under the tongue to the accompanying load. Route the chain end of the sling leg through the medium clevis on the A-22 or the cargo net apex fitting and insert link 3 in the grab hook.

*Figure 6-12. M167 20-MM AA Gun (Vulcan)*

## 6-14. BMS-120 Battalion Mortar System

**a. Applicability.** The following item in Table 6-13 is certified for all helicopters with suitable lift capacity by the US Army Natick Research, Development, and Engineering Center:

**Table 6-13. BMS-120 Battalion Mortar System**

| NOMENCLATURE | MAX WEIGHT (POUNDS) | SLING SET | LINK COUNT FRONT/REAR | RECOMMENDED AIRSPEED (KNOTS) |
|---|---|---|---|---|
| BMS-120, carriage mounted | 764 | 10K | 3/67 | 60 |

**b. Materials.** The following materials are required to rig this load:

**(1)** Sling set (10,000-pound capacity).

**(2)** Tape, adhesive, pressure-sensitive, 2-inch wide roll.

**(3)** Cord, nylon, Type III, 550-pound breaking strength.

**(4)** Webbing, cotton, 1/4-inch, 80-pound breaking strength.

**(5)** Felt sheet, cattle hair, Type IV, 1/2-inch or suitable substitute.

**(6)** Tie-down strap, cargo, CGU-1B (as required).

**c. Personnel.** Two persons can prepare and rig this load in 20 minutes.

**d. Procedures.** The following procedures apply to this load:

**(1) Preparation.** Prepare the load using the following steps:

**(a)** Secure all loose equipment, chains and wires with tape or Type III nylon cord.

**(b)** Secure the mortar to the carriage by routing the tie-down strap across the mortar base plate and around the axle. Route one end of the strap through the base plate left handle, around the axle, and back through the base plate handle. Continue the strap across the base plate, through the base plate right handle, around the axle, back through the base plate handle, and attach the end of the tie-down strap to the ratchet. Pad the tie-down strap where it makes contact with the sharp edges of the base plate.

**(2) Rigging.** Rig the load according to the steps in Figure 6-13.

**(3) Hookup.** The hookup team stands alongside the carriage. The static wand person discharges the static electricity with the static wand. The hookup person places the apex fitting onto the aircraft cargo hook. The hookup team then moves clear of the helicopter but remains close to the load as the helicopter removes slack from the sling legs. When successful hookup is assured, the hookup team quickly exits the area underneath the helicopter to the designated rendezvous point.

**(4) Derigging.** Derigging is the reverse of the preparation and rigging procedures in steps d (1) and d (2).

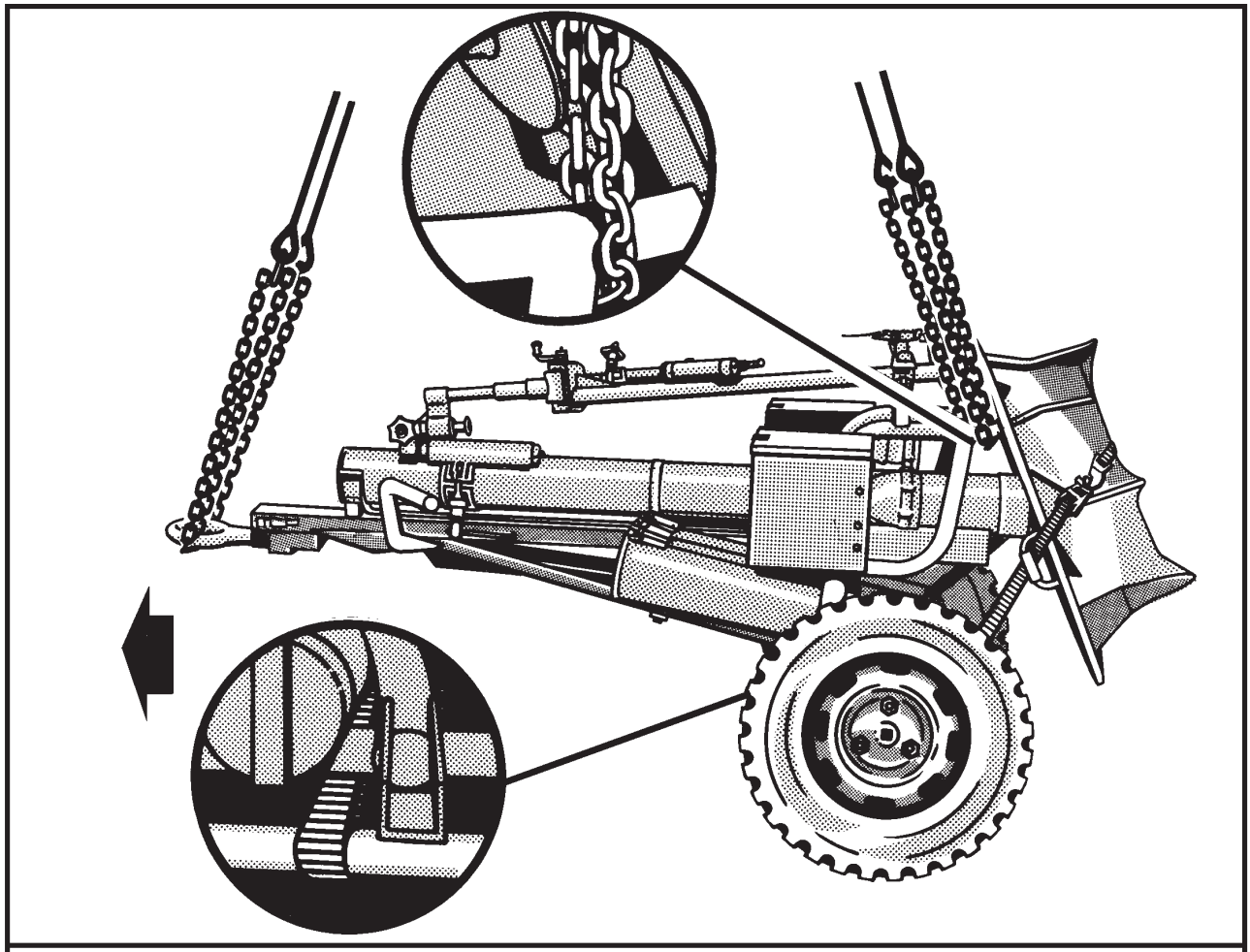

**RIGGING STEPS**

**1.** Position the apex fitting on top of the carriage. Route outer sling legs 1and 2 to the anchor points behind the base plate supports. Route inner sling legs 3 and 4 to the lunette. Sling legs 1 and 3 must be on the left side of the load. Sling legs 1 and 2 are on the rear of the load.

**2.** Route the chain end of sling leg 1 around the horizontal pipe on the left side of the carriage between the vertical pipe and the base plate. Place the correct link from Table 6-13 in the grab hook. Repeat with sling leg 2 and the right side of the carriage. Secure the excess chain with Type III nylon cord.

**3.** Route the chain end of sling leg 3 through the lunette. Place the correct link from Table 6-13 in the grab hook. Repeat with sling leg 4 on the lunette.

**4.** Cluster and tie or tape (breakaway technique) the grab hooks from sling legs 1 and 2 together on top of the bipod assembly and sling legs 3 and 4 together on top of the lunette to prevent entanglement during hookup and lift-off.

**NOTE: Failure to use the proper breakaway technique in taping or tying the sling legs could result in damage to the load.**

*Figure 6-13. BMS-120 Battalion Mortar System*

# CHAPTER 7

# CERTIFIED SINGLE-POINT RIGGING PROCEDURES FOR GUIDED MISSILE SYSTEMS

## 7-1. INTRODUCTION

This chapter contains rigging procedures for single-point guided missile systems that have been certified for sling load. Each rigging procedure is found in a paragraph that includes a description of the load, materials required for rigging, and steps to complete the procedure. An applicability paragraph is also a part of each paragraph and identifies the certified loads. The certified single-point rigging procedures for guided missile systems are in this section. Paragraphs 7-2 through 7-8 give detailed instructions for rigging loads.

**NOTE: Reach Pendants may be used on all single point loads. A static discharge person is not required when using a Reach Pendant.**

## 7-2. M54A1/M54A2 Chaparral Launch Station

**a. Applicability.** The following items in Table 7-1 are certified for all helicopters with suitable lift capacity by the US Army Natick Research, Development, and Engineering Center:

**Table 7-1. M54A1/M54A2 Chaparral Launch Station**

| NOMENCLATURE | MAX WEIGHT (POUNDS) | SLING SET | LINK COUNT FRONT/REAR | RECOMMENDED AIRSPEED (KNOTS) |
|---|---|---|---|---|
| M54A1 Launch Station | 13,000 | 25K | 10/3 | 100 |
| M54A2 Launch Station | 13,000 | 25K | 10/3 | 100 |

**b. Materials.** The following materials are required to rig this load:

**(1)** Sling set (25,000-pound capacity).

**(2)** Tape, adhesive, pressure-sensitive, 2-inch wide roll.

**(3)** Cord, nylon, Type III, 550-pound breaking strength.

**(4)** Webbing, cotton, 1/4-inch, 80-pound breaking strength.

**c. Personnel.** Two persons can prepare and rig this load in 20 minutes.

**d. Procedures.** The following procedures apply to this load:

**(1) Preparation.** Prepare the load using the following steps:

**(a)** Prepare the launch station for sling loading in accordance with TM 9-1425-2585-10-1.

**(b)** Rotate the missile pedestal 90 degrees from the centerline to avoid sling interference.

**(2) Rigging.** Rig the load according to the steps in Figure 7-1.

**(3) Hookup.** The hookup team stands on the back of the gunner's compartment. The static wand person discharges the static electricity with the static wand. The hookup person places the apex fitting onto the aircraft cargo hook. The hookup team then moves clear of the helicopter but remains close to the load as the helicopter removes slack from the sling legs. When successful hookup is assured, the hookup team quickly exits the area underneath the helicopter to the designated rendezvous point.

**(4) Derigging.** Derigging is the reverse of the preparation and rigging procedures in steps d (1) and d (2).

**NOTE: Brief the aircrew to hover to the side of the load and relax sling leg tension before releasing the apex fitting to prevent damage to the missile pedestal.**

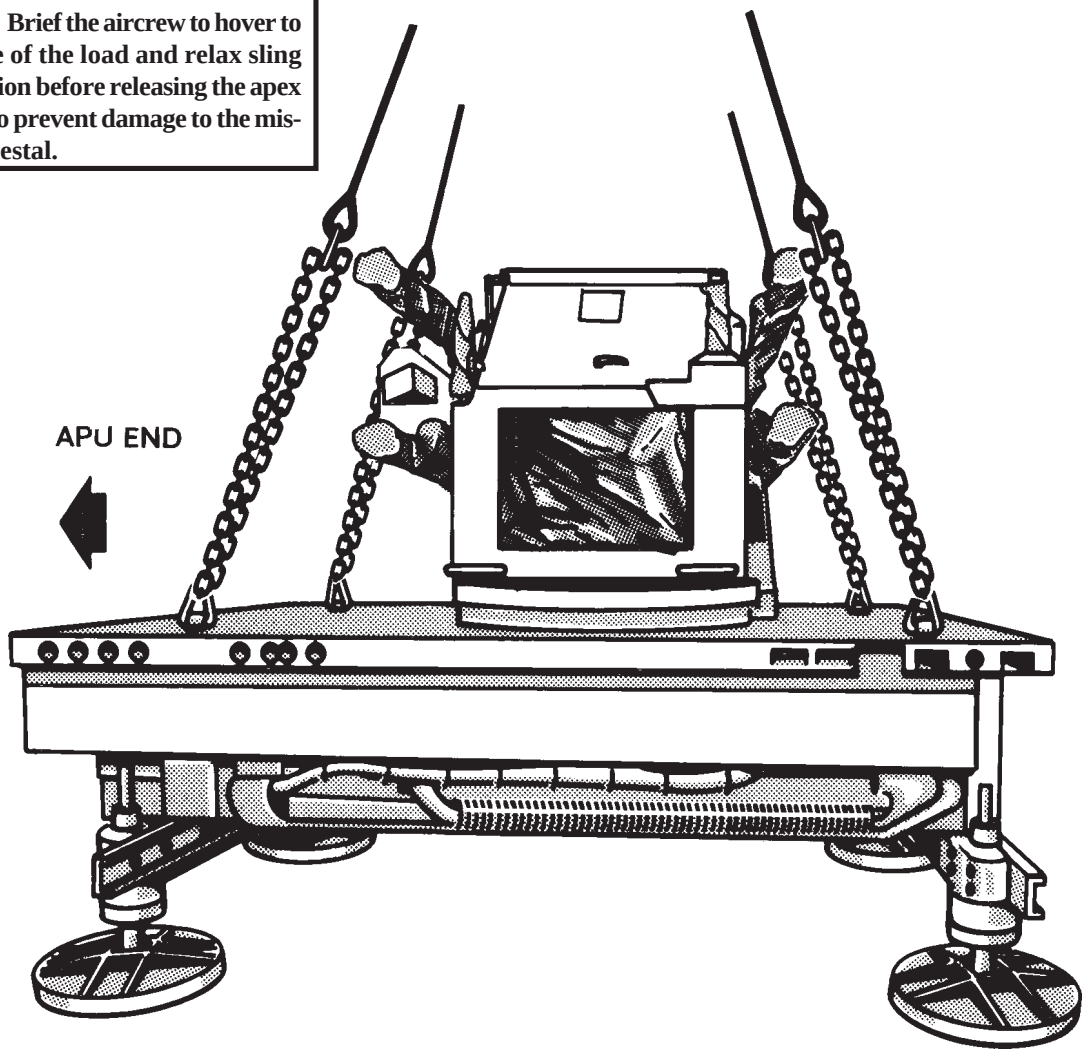


**RIGGING STEPS**

**1.** Position the apex fitting on top of the gunner's compartment. Route outer sling legs 1and 2 to the front of the load (main power unit end). Route inner sling legs 3 and 4 to the rear of the load. Sling legs 1 and 3 must be on the left side of the load.

**2.** Route the chain end of sling leg 1 through the left front lift provision located on the left front corner of the platform. Place the correct link from Table 7-1 in the grab hook. Repeat with sling leg 2 and the right front lift provision. Secure the excess chain with Type III nylon cord.

**3.** Route the chain end of sling leg 3 through the left rear lift provision located on the left rear corner of the platform. Place the correct link from Table 7-1 in the grab hook. Repeat with sling leg 4 on the right rear lift provision.

**4.** Cluster and tie or tape (breakaway technique) the sling legs together on top of the gunner's compartment to prevent entanglement during hookup and lift-off.

*Figure 7-1. M54A1/M54A2 Chaparral Launch Station*

## 7-3. M85 Towed Chaparral Missile System

**a. Applicability.** The following item in Table 7-2 is certified for all helicopters with suitable lift capacity by the US Army Natick Research, Development, and Engineering Center:

**Table 7-2. M85 Towed Chaparral Missile System**

| NOMENCLATURE | MAX WEIGHT (POUNDS) | SLING SET | LINK COUNT FRONT/REAR | RECOMMENDED AIRSPEED (KNOTS) |
|---|---|---|---|---|
| M85 Towed Chaparral Missile System | 13,500 | 25K | 28/3 | 100 |

**b. Materials.** The following materials are required to rig this load:

**(1)** Sling set (25,000-pound capacity).

**(2)** Tape, adhesive, pressure-sensitive, 2-inch wide roll.

**(3)** Cord, nylon, Type III, 550-pound breaking strength.

**(4)** Webbing, cotton, 1/4-inch, 80-pound breaking strength.

**c. Personnel.** Two persons can prepare and rig this load in 20 minutes.

**d. Procedures.** The following procedures apply to this load:

**(1) Preparation.** Prepare the load using the following steps:

**(a)** Prepare the launch station for sling loading in accordance with TM 9-1425-2585-10-1. Ensure the four stabilizer pads are raised all the way up.

**(b)** Secure the lift provisions on the upper portion of the four stabilizers.

**(c)** Rotate the missile pedestal 90 degrees from the centerline to avoid sling interference.

**(d)** Place the trailer jack support in the fully retracted (UP) position.

**(2) Rigging.** Rig the load according to the steps in Figure 7-2.

**(3) Hookup.** The hookup team stands on the back of the gunner's compartment. The static wand person discharges the static electricity with the static wand. The hookup person places the apex fitting onto the aircraft cargo hook. The hookup team then moves clear of the helicopter but remains close to the load as the helicopter removes slack from the sling legs. When successful hookup is assured, the hookup team quickly exits the area underneath the helicopter to the designated rendezvous point.

**(4) Derigging.** Derigging is the reverse of the preparation and rigging procedures in steps d (1) and d (2).

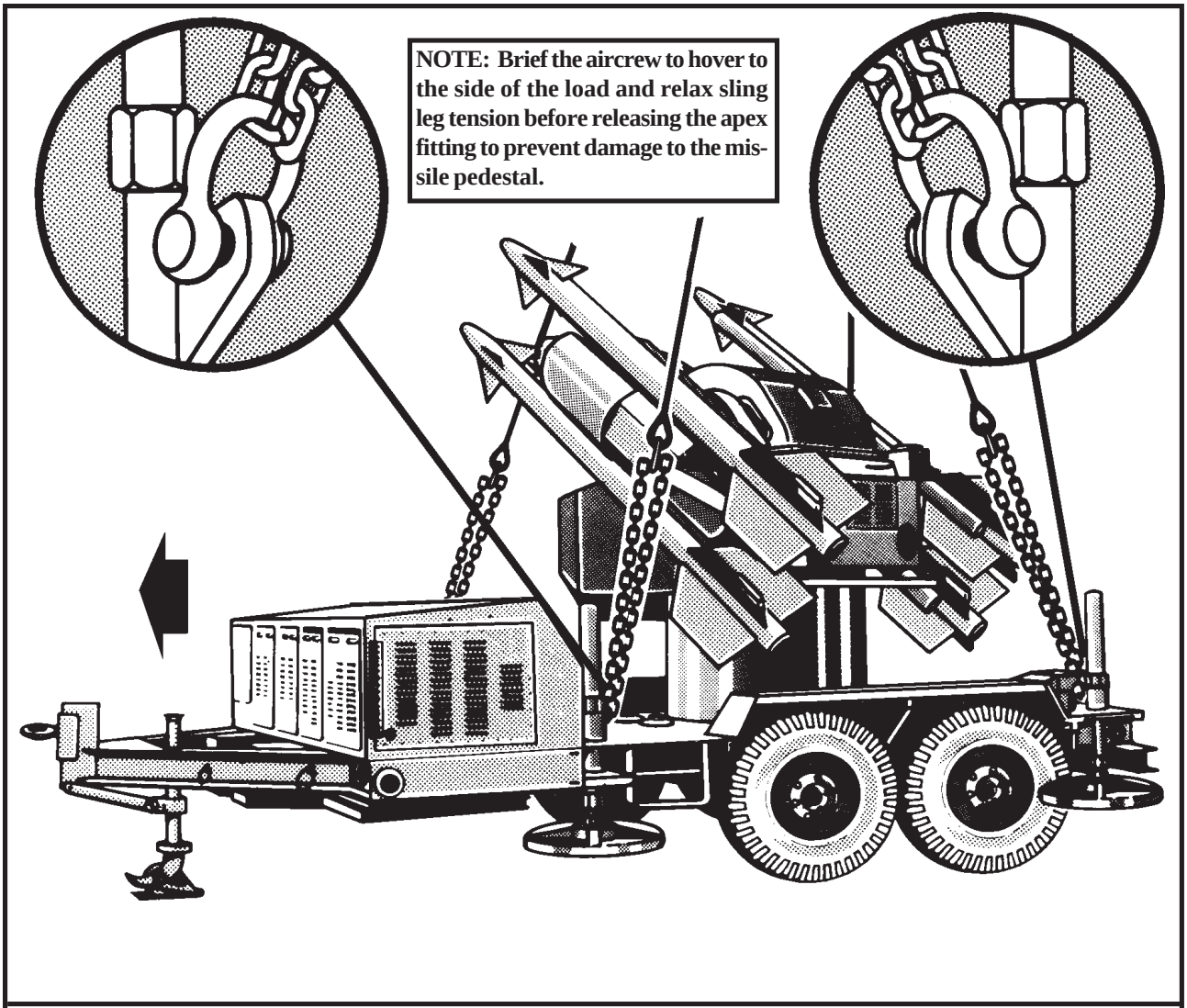


**RIGGING STEPS**

**1.** Position the apex fitting on top of the crew compartment. Route outer sling legs 1and 2 to the front of the load (lunette end). Route inner sling legs 3 and 4 to the rear of the load. Sling legs 1 and 3 must be on the left side of the load.

**2.** Route the chain end of sling leg 1 through the left front lift provision located on the upper structure of the left front stabilizer. Place the correct link from Table 7-2 in the grab hook. Repeat with sling leg 2 and the right front lift provision. Secure the excess chain with Type III nylon cord.

**3.** Route the chain end of sling leg 3 through the left rear lift provision located on the upper structure of the left rear stabilizer. Place the correct link from Table 7-2 in the grab hook. Repeat with sling leg 4 on the right rear lift provision.

**4.** Cluster and tie or tape (breakaway technique) the sling legs together on top of the crew compartment to prevent entanglement during hookup and lift-off.

*Figure 7-2. M85 Towed Chaparral Missile System*

## 7-4. Continuous Wave Acquisition Radar (CWAR)

**a. Applicability.** The following items, components of the HAWK Missile System, in Table 7-3 are certified for all helicopters with suitable lift capacity by the US Army Natick Research, Development, and Engineering Center:

**Table 7-3. Continuous Wave Acquisition Radar (CWAR)**

| NOMENCLATURE | MAX WEIGHT (POUNDS) | SLING SET | LINK COUNT FRONT/REAR | RECOMMENDED AIRSPEED (KNOTS) |
|---|---|---|---|---|
| CWAR, Phase II, on M514 Trailer | 4,898 | 25K | 3/14 | 75 |
| CWAR, Phase III, on M514 Trailer | 4,840 | 25K | 3/14 | 75 |

**b. Materials.** The following materials are required to rig this load:

**(1)** Sling set (25,000-pound capacity).

**(2)** Tape, adhesive, pressure-sensitive, 2-inch wide roll.

**(3)** Cord, nylon, Type III, 550-pound breaking strength.

**(4)** Webbing, cotton, 1/4-inch, 80-pound breaking strength.

**c. Personnel.** Two persons can prepare and rig this load in 20 minutes.

**d. Procedures.** The following procedures apply to this load:

**(1) Preparation.** Prepare the load using the following steps:

**(a)** Prepare the CWAR for general travel according to the operator's manual. Secure the shipping cover over the radar.

**(b)** Extend the rear leveling jack so the CWAR is level.

**(c)** Secure all doors and vents with tape or Type III nylon cord.

**(d)** Secure all safety chains and hoses to the trailer frame with tape or Type III nylon cord.

**(2) Rigging.** Rig the load according to the steps in Figure 7-3.

**(3) Hookup.** This load does not use a ground crew to connect the load to the aircraft cargo hook. As the helicopter hovers over the load, the flight engineer hooks the apex fitting with the helicopter cargo loading pole, lifts the apex fitting up, and places it on the aircraft cargo hook. The ground crew stands by the trailer and checks to make sure the sling legs do not become entangled as the helicopter removes slack from the sling legs. When successful hookup is assured, the hookup team quickly exits the area underneath the helicopter to the designated rendezvous point.

**(4) Derigging.** Derigging is the reverse of the preparation and rigging procedures in steps d (1) and d (2).

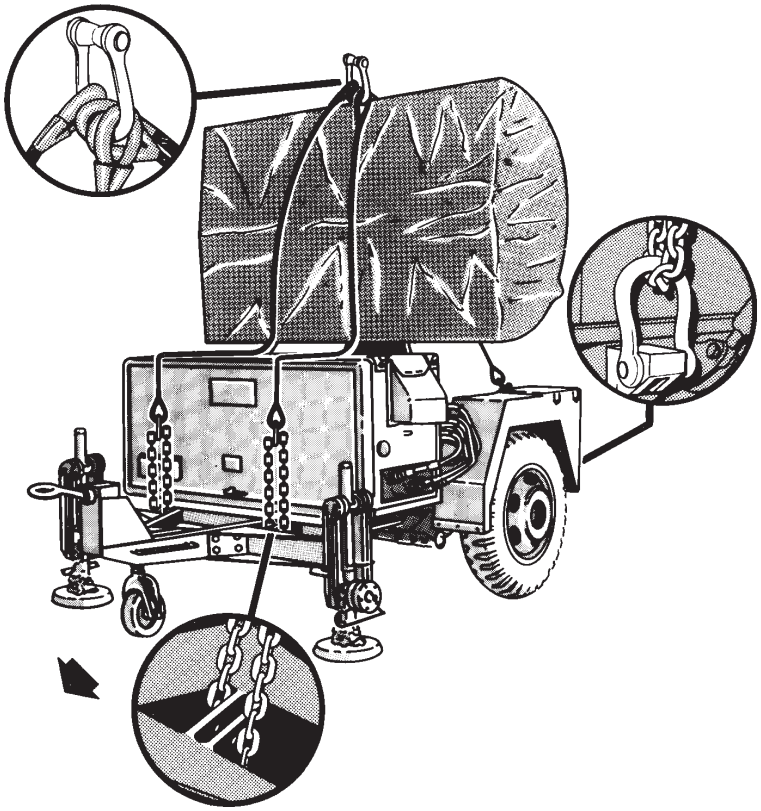

**RIGGING STEPS**

**1.** Position the apex fitting on top of the radar antenna. Route outer sling legs 1and 2 to the front of the trailer (lunette end). Route inner sling legs 3 and 4 to the rear of the load. Sling legs 1 and 3 must be on the left side of the load.

**2.** Route the chain end of sling leg 1 down through the opening between the left front leveling jack bracket and the trailer A-frame, under the short cross members, and back up through the opening between the leveling jack bracket and the front of the trailer chassis. Place the correct link from Table 7-3 in the grab hook. Repeat with sling leg 2 on the right side of the trailer A-frame.

**3.** Route the chain end of sling leg 3 through the left rear lift provision located on the left rear corner of the trailer chassis outboard of the support rod. Place the correct link from Table 7-3 in the grab hook. Repeat with sling leg 4 on the right rear lift provision. Secure the excess chain with Type III nylon cord.

**4.** Pull the front sling legs up and tape or tie (breakaway technique) the chains together at the top of the leveling jack bracket. Tape or tie (breakaway technique) the front sling leg grab hooks to the back of the front compartment so the chains do not become entangled during hookup and lift-off.

**5.** Pull the aft sling legs up and tape or tie (breakaway technique) the grab hooks to the base of the antenna support so the chains do not become entangled in the rear support leg.

**6.** Position the apex fitting so that it sits vertically on top of the radar antenna. Tape in place (breakaway technique) so the helicopter aircrew can pick it up using the helicopter cargo loading pole.

*Figure 7-3. Continuous Wave Acquisition Radar (CWAR)*

## 7-5. M192E1/M192-1 Zero Length Launcher

**a. Applicability.** The following items, components of the HAWK Missile System, in Table 7-4 are certified for all helicopters with suitable lift capacity by the US Army Natick Research, Development, and Engineering Center:

**Table 7-4. M192E1/M192-1 Zero Length Launcher**

| NOMENCLATURE | MAX WEIGHT (POUNDS) | SLING SET | LINK COUNT FRONT/REAR | RECOMMENDED AIRSPEED (KNOTS) |
|---|---|---|---|---|
| M192E1, Guided Missile Launcher, Zero Length | 4,482 | 25K | 53/53 | 90 |
| M192-1, Guided Missile Launcher, Zero Length | 4,500 | 15K | 47/50 | 60 |

**b. Materials.** The following materials are required to rig this load:

**(1)** Sling set (25,000 or 15,000-pound capacity).

**(2)** Tape, adhesive, pressure-sensitive, 2-inch wide roll.

**(3)** Cord, nylon, Type III, 550-pound breaking strength.

**(4)** Webbing, cotton, 1/4-inch, 80-pound breaking strength.

**(5)** Webbing, nylon, tubular, 1/2-inch (20' length).

**c. Personnel.** Two persons can prepare and rig this load in 20 minutes.

**d. Procedures.** The following procedures apply to this load:

**(1) Preparation.** Prepare the load using the following steps:

**(a)** Prepare the launcher for general travel according to the operator's manual.

**(b)** Secure all doors and vents with tape or Type III nylon cord.

**(c)** Secure all safety chains and hoses to the trailer frame with tape or Type III nylon cord.

**(d)** Load the launcher section control box inside the helicopter.

**(e)** Engage the brakes.

**(2) Rigging.** Rig the load according to the steps in Figure 7-4.

**(3) Hookup.** The hookup team stands on the launcher on each side of the pedestal. The static wand person discharges the static electricity with the static wand. The hookup person places the apex fitting onto the aircraft cargo hook. The hookup team then moves clear of the helicopter but remains close to the load as the helicopter removes slack from the sling legs. When successful hookup is assured, the hookup team quickly exits the area underneath the helicopter to the designated rendezvous point.

Due to the relatively small clearance between the top of the load and the helicopter during hookup, it may be desirable for the helicopter flight engineer to make the hookup using the cargo loading pole (shepherd's hook). Place the apex fitting on top of the center launch boom, with the pin facing up. Ground crew must stand by to ensure the sling legs do not become entangled on the load.

**(4) Derigging.** Derigging is the reverse of the preparation and rigging procedures in steps d (1) and d (2).

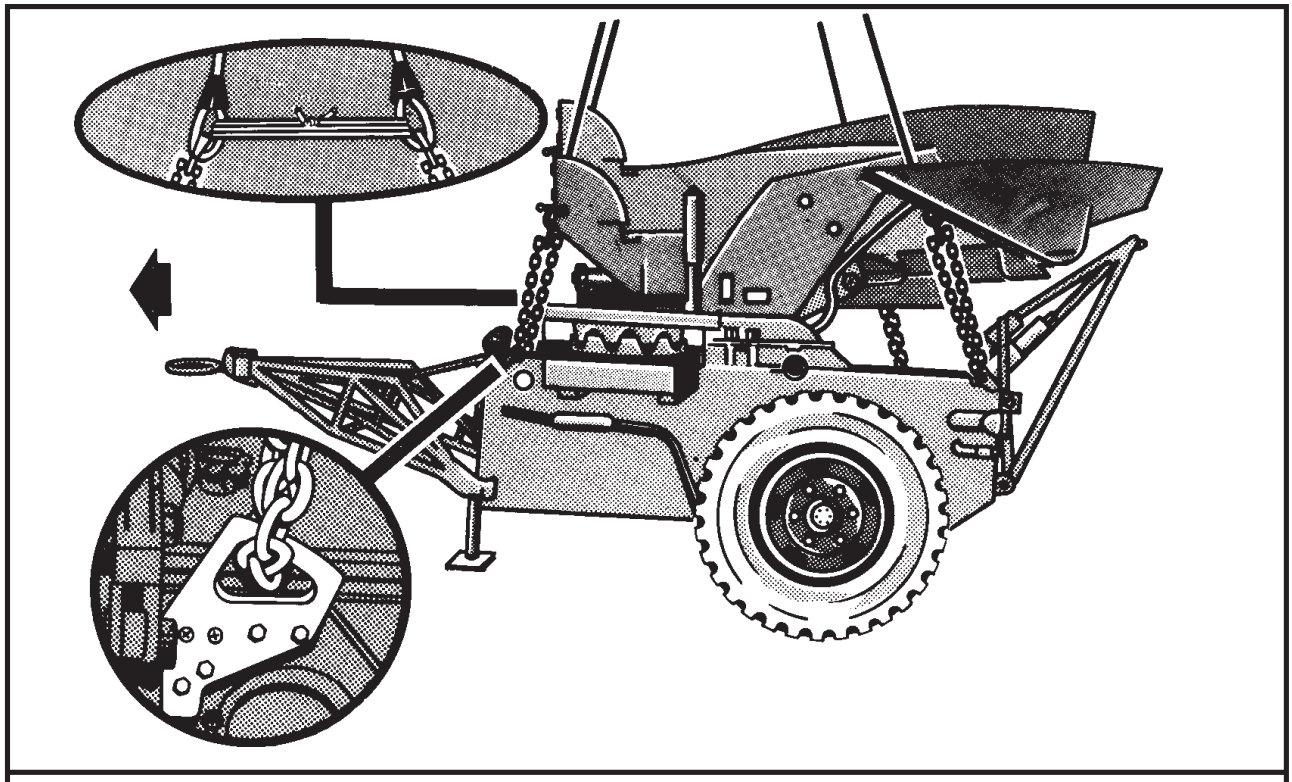

**RIGGING STEPS**

**1.** Position the apex fitting on top of the launch stand pedestal. Route outer sling legs 1and 2 to the front of the launcher (lunette end). Route inner sling legs 3 and 4 to the rear of the load. Sling legs 1 and 3 must be on the left side of the load.

**2.** Route the chain end of sling leg 1 through the left front lifting provision located aft of the leveling cylinder outboard end. Place the correct link from Table 7-4 in the grab hook. Repeat with sling leg 2 on the right front lift provision. Ensure the chain is routed from the inside of the lifting provision to the outside so the hook on the grab hook faces outboard when you insert the chain in the grab hook. Secure the excess chain with Type III nylon cord.

**3.** Route one end of the tubular nylon through the potted eye of sling leg 1. Route the same end of the tubular nylon through the potted eye of sling leg 2. Position the potted eyes of the two sling legs 39 inches apart so the sling legs cannot contact the two outer launch booms or the center boom. Using the remainder of the tubular nylon, repeat the procedure until there are at least 5 lengths of nylon (2 1/2 wraps) between the potted eyes of the two sling legs. Tie the ends of the tubular nylon together with a square knot and an overhand knot in each running end.

**NOTE: Do not route the tubular nylon between the chains or grab hooks. Failure to attach the tubular nylon between the sling leg potted eyes may result in damage to the missile launch booms or failure of the load.**

**4.** Route the chain end of sling leg 3 through the left rear lift provision located above the taillight. Place the correct link from Table 7-4 in the grab hook. Repeat with sling leg 4 on the right rear lift provision. Secure the excess chain with Type III nylon cord.

**5.** Pull the sling legs up and tape or tie (breakaway technique) the grab hooks to the boom supports. Cluster and tape or tie (breakaway technique) all sling legs together above the center launch boom to prevent entanglement during hookup and lift-off.

*Figure 7-4. M192E1/M192-1 Zero Length Launcher*

## 7-6. M501E3 Loader-Transporter, Guided Missile

**a. Applicability.** The following items, components of the HAWK Missile System, in Table 7-5 are certified for all helicopters with suitable lift capacity by the US Army Natick Research, Development, and Engineering Center:

**Table 7-5. M501E3 Loader-Transporter, Guided Missile**

| NOMENCLATURE | MAX WEIGHT (POUNDS) | SLING SET | LINK COUNT FRONT/REAR | RECOMMENDED AIRSPEED (KNOTS) |
|---|---|---|---|---|
| M501E3 Loader-Transporter, Guided Missile | 5,650 | 25K | 3/13 | 100 |
| M501E3 Loader-Transporter, Guided Missile | 5,300 | 15K | 8/3 | 80 |

**b. Materials.** The following materials are required to rig this load:

**(1)** Sling set (25,000 or 15,000-pound capacity).

**(2)** Tape, adhesive, pressure-sensitive, 2-inch wide roll.

**(3)** Cord, nylon, Type III, 550-pound breaking strength.

**(4)** Webbing, cotton, 1/4-inch, 80-pound breaking strength.

**c. Personnel.** Two persons can prepare and rig this load in 20 minutes.

**d. Procedures.** The following procedures apply to this load:

**(1) Preparation.** Prepare the load using the following steps:

**(a)** With the loader-transporter engine **ON**, raise the super structure about 3 feet using the **EXTENSION** lever. Using the **ROLL/ELEVATION, AZIMUTH, and EXTENSION** levers, position the super structure in the **OPERATIONAL READY** position. Shut the engine down and place the transmission in neutral.

**(b)** Secure the super structure arms in the operational position by engaging the lock pins. **THE SUPER STRUCTURE CANNOT BE ALLOWED TO MOVE.**

**(c)** Secure all safety chains and hoses to the adjacent structure with tape or Type III nylon cord.

**(d)** Secure all doors and vents with tape or Type III nylon cord.

**(2) Rigging.** Rig the load according to the steps in Figure 7-5.

**(3) Hookup.** The hookup team stands on the loader-transporter on each side of the center of the vehicle. The static wand person discharges the static electricity with the static wand. The hookup person places the apex fitting onto the aircraft cargo hook. The hookup team then moves clear of the helicopter but remains close to the load as the helicopter removes slack from the sling legs. When successful hookup is assured, the hookup team quickly exits the area underneath the helicopter to the designated rendezvous point.

**(4) Derigging.** Derigging is the reverse of the preparation and rigging procedures in steps d (1) and d (2).

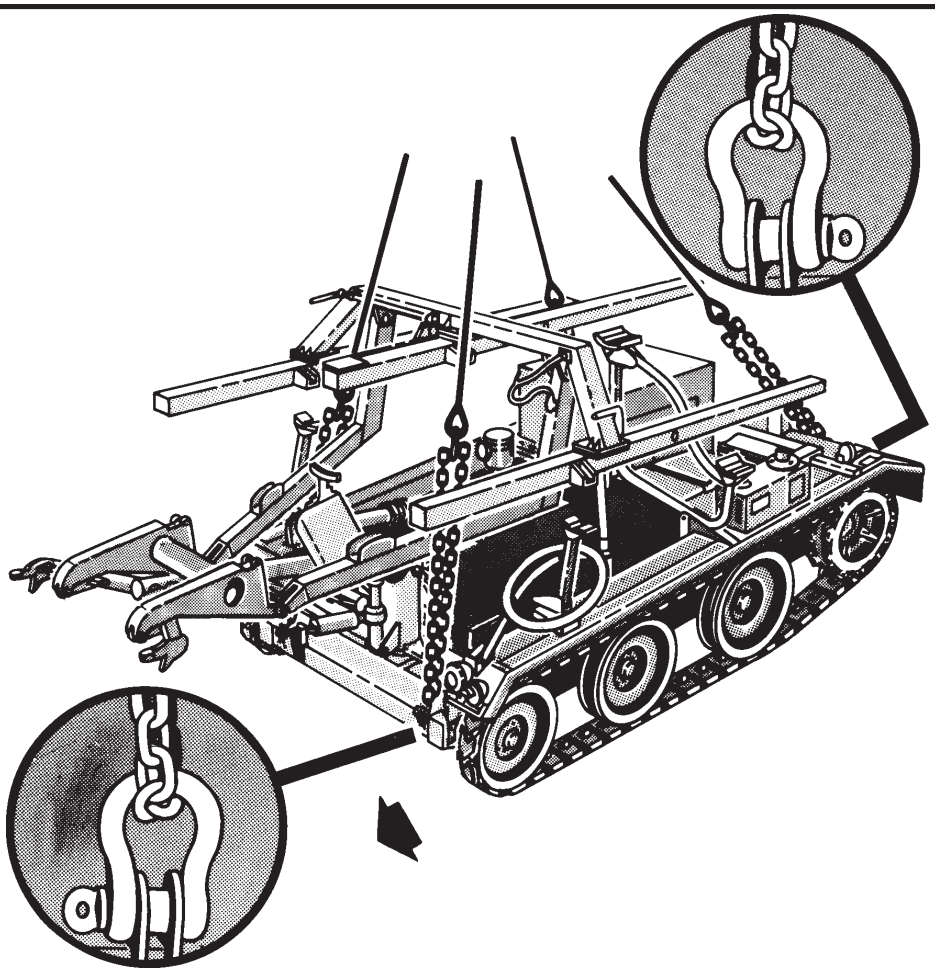

**RIGGING STEPS**

**1.** Position the apex fitting on top of the loader arm at the center of the vehicle. Route outer sling legs 1and 2 to the front of the vehicle (driver's compartment). Ensure the sling legs are routed inboard of the outer two upper hoisting beams and outboard of the two lower super structure arms.

**2.** Route inner sling legs 3 and 4 to the rear of the load (engine compartment). Ensure the sling legs are routed inboard of the outer two upper hoisting beams. Sling legs 1 and 3 must be on the left side of the load.

**3.** Route the chain end of sling leg 1 through the left front lift provision clevis located inboard of the left front wheel. Place the correct link from Table 7-5 in the grab hook. Repeat with sling leg 2 on the right front lift provision clevis.

**4.** Route the chain end of sling leg 3 through the left rear lift provision clevis inboard of the left rear fender. Place the correct link from Table 7-5 in the grab hook. Repeat with sling leg 4 on the right rear lift provision clevis. Secure the excess chain with Type III nylon cord.

**5.** Pull the sling legs up and tape or tie (breakaway technique) the grab hooks to the hoisting beams. Cluster and tape or tie (breakaway technique) all sling legs together above the hoisting beams to prevent entanglement during hookup and lift-off.

*Figure 7-5. Guided Missile Loader-Transporter*

## 7-7. M1E2 Loading and Storage Missile Pallet

**a. Applicability.** The following item, component of the HAWK Missile System, in Table 7-6 is certified for all helicopters with suitable lift capacity by the US Army Natick Research, Development, and Engineering Center:

**Table 7-6. M1E2 Loading and Storage Missile Pallet**

| NOMENCLATURE | MAX WEIGHT (POUNDS) | SLING SET | LINK COUNT FRONT/REAR | RECOMMENDED AIRSPEED (KNOTS) |
|---|---|---|---|---|
| M1E2 Loading and Storage Missile Pallet on M390C Trailer Chassis | 4,670 | 15K | 3/35 | 100 |

**b. Materials.** The following materials are required to rig this load:

**(1)** Sling set (15,000-pound capacity).

**(2)** Tape, adhesive, pressure-sensitive, 2-inch wide roll.

**(3)** Cord, nylon, Type III, 550-pound breaking strength.

**(4)** Webbing, cotton, 1/4-inch, 80-pound breaking strength.

**c. Personnel.** Two persons can prepare and rig this load in 10 minutes.

**d. Procedures.** The following procedures apply to this load:

**(1) Preparation.** Prepare the load using the following steps:

**(a)** Prepare the missile pallet for general travel in accordance with the operator's manual.

**(b)** Ensure the 3 1/4-ton shackles initially provided with the M390C trailer chassis have been replaced by the 6 3/4-ton shackles (NSN 4030-00-278-0699). Ensure the shackles are properly pinned.

**(c)** Secure all cables, safety chains, and hoses to the adjacent structure with tape or Type III nylon cord.

**(d)** Engage the parking brake.

**(e)** Adjust the forward and aft leveling jacks so the pads are located just above ground level.

**(2) Rigging.** Rig the load according to the steps in Figure 7-6.

**(3) Hookup.** The hookup team stands on the missile pallet. The static wand person discharges the static electricity with the static wand. The hookup person places the apex fitting onto the aircraft cargo hook. The hookup team then moves clear of the helicopter but remains close to the load as the helicopter removes slack from the sling legs. When successful hookup is assured, the hookup team quickly exits the area underneath the helicopter to the designated rendezvous point.

**(4) Derigging.** Derigging is the reverse of the preparation and rigging procedures in steps d (1) and d (2).

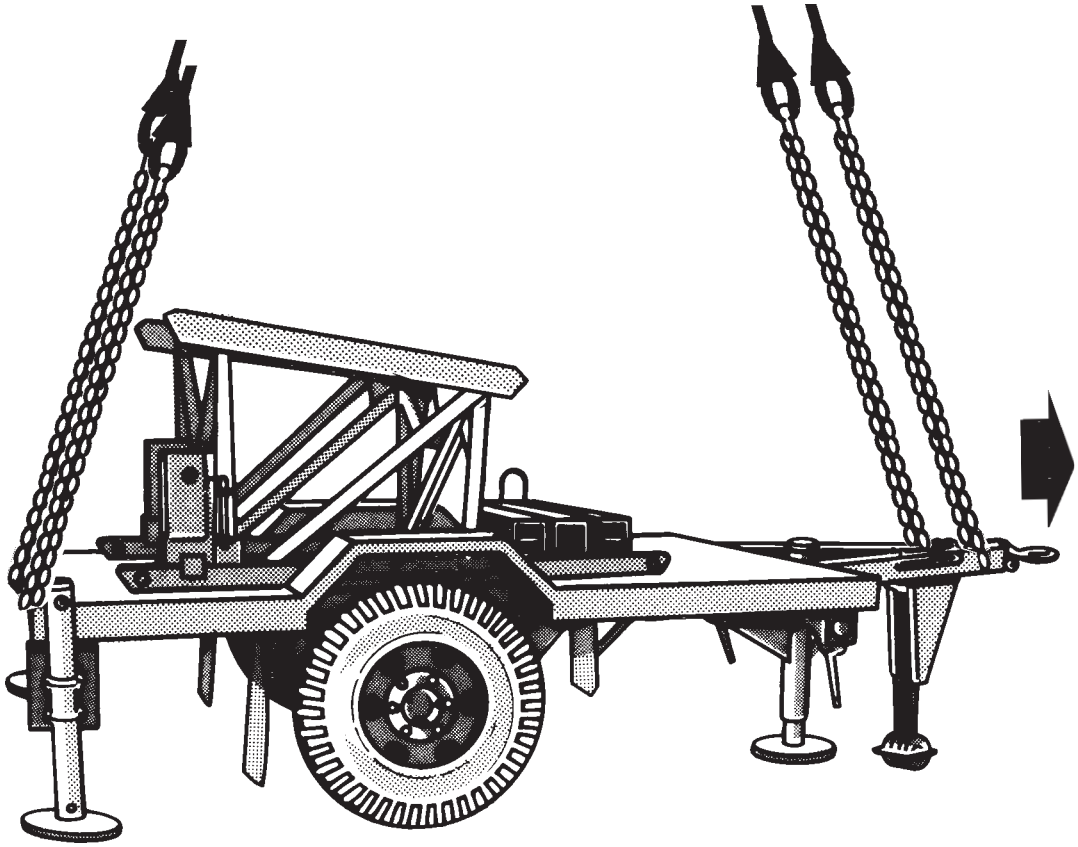

**RIGGING STEPS**

**1.** Position the apex fitting on top of the missile storage racks. Route outer sling legs 1and 2 to the rear of the missile pallet and inner sling legs 3 and 4 to the front of the missile pallet (lunette end).

**2.** Route the chain end of sling leg 1 through the left rear lift provision located on the corner of the trailer above the taillight. Route the chain from the inside to the outside of the lift provision. Place the correct link from Table 7-6 in the grab hook. Repeat with sling leg 2 on the right rear lift provision. Secure the excess chain with Type III nylon cord.

**3.** Loop the chain end of sling leg 3 through the opening aft of the lunette and of the landing wheel on the left side of the tongue. Place the correct link from Table 7-6 in the grab hook. Repeat with sling leg 4 on the side of the tongue.

**4.** Cluster and tie or tape (breakaway technique) the sling legs together on top of the missile storage racks to prevent entanglement during hookup and lift-off.

*Figure 7-6. M1E2 Loading and Storage Missile Pallet*

## 7-8. Pedestal-Mounted Stinger (Avenger)

**a. Applicability.** The following items in Table 7-7 are certified for all helicopters with suitable lift capacity by the US Army Natick Research, Development, and Engineering Center:

**Table 7-7. Pedestal-Mounted Stinger (Avenger)**

| NOMENCLATURE | MAX WEIGHT (POUNDS) | SLING SET | LINK COUNT FRONT/REAR | RECOMMENDED AIRSPEED (KNOTS) |
|---|---|---|---|---|
| Stinger, Pedestal-Mounted on M998 (Avenger) | 8,513 | 10K | 50/5 | 90 |
| Stinger, Pedestal-Mounted on M1097 (Avenger) | 9,087 | 10K | 50/5 | 90 |

**b. Materials.** The following materials are required to rig this load:

**(1)** Sling set (10,000-pound capacity).

**(2)** Tape, adhesive, pressure-sensitive, 2-inch wide roll.

**(3)** Cord, nylon, Type III, 550-pound breaking strength.

**(4)** Webbing, cotton, 1/4-inch, 80-pound breaking strength.

**c. Personnel.** Two persons can prepare and rig this load in 15 minutes.

**d. Procedures.** The following procedures apply to this load:

**(1) Preparation.** Prepare the load using the following steps:

**(a)** Fold the mirrors in front of the windshield and tie together with Type III nylon cord.

**(b)** Ensure the Avenger fire unit is secured to the truck. Secure all equipment inside the fire unit with tape, tie-downs, or nylon cord; close and secure the door.

**(c)** Disconnect the standard vehicle mounted launcher connectors from the missile pods and secure them to the fire unit with tape or nylon cord.

**(d)** Secure all equipment inside the vehicle with tape, nylon cord, or tie-downs. Close and secure the doors (if installed).

**(e)** Ensure the fuel tank is not over 3/4 full. Inspect the fuel tank, oil filter, and battery caps for proper installation.

**(f)** Place the transmission in neutral and set the parking brake.

**(g)** Ensure the front wheels are pointed straight ahead. Secure the steering wheel using the securing device attached under the dashboard.

**(2) Rigging.** Rig the load according to the steps in Figure 7-7.

**NOTE: Hookup of this load presents substantial risk of damage to the load or injury to the hookup personnel. Use of a reach pendant is recommended for this load.**

**(3) Hookup.** The hookup team stands on top of the fire unit. The static wand person discharges the static electricity with the static wand. The hookup person places the apex fitting onto the aircraft cargo hook. The hookup team then moves clear of the helicopter but remains close to the load as the helicopter removes slack from the sling legs. When successful hookup is assured, the hookup team quickly exits the area underneath the helicopter to the designated rendezvous point.

**(4) Derigging.** Derigging is the reverse of the preparation and rigging procedures in steps d (1) and d (2).

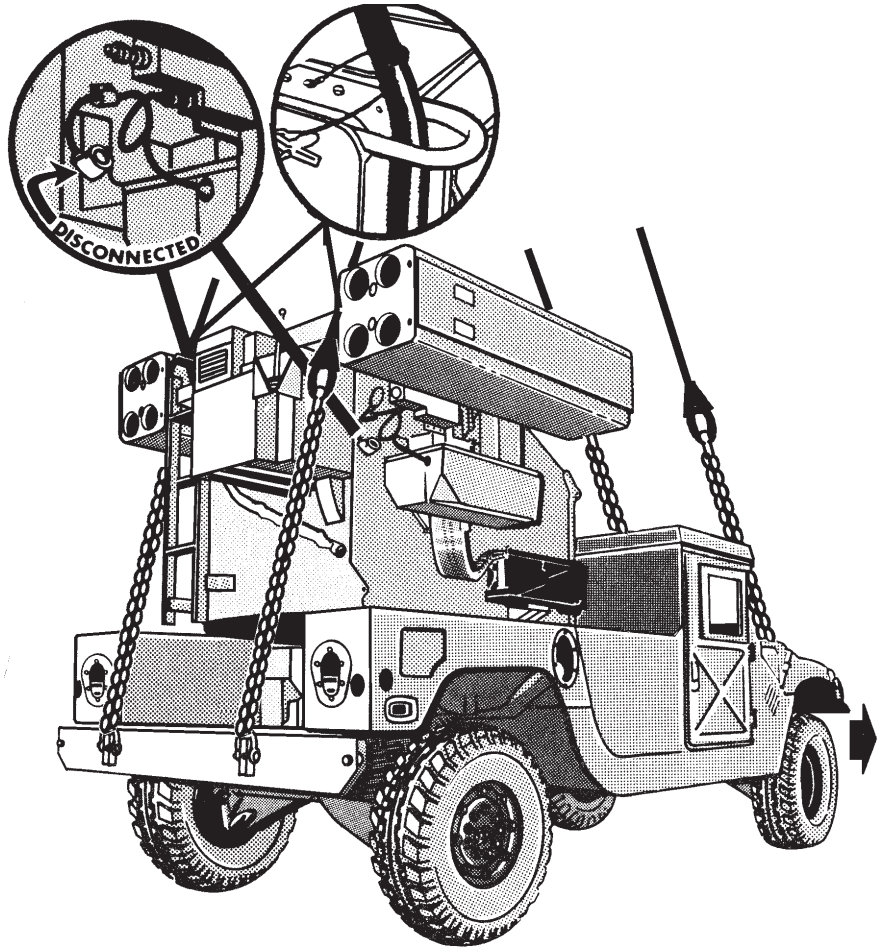


**RIGGING STEPS**

**1.** Position the apex fitting on top of the fire unit. Route outer sling legs 1and 2 to the front of the vehicle and inner sling legs 3 and 4 to the rear of the load. Ensure sling legs 1 and 3 are on the left side of the load.

**2.** Route the chain end of sling leg 1 through the left front lift provision that protrudes through the hood. Place the correct link from Table 7-7 in the grab hook. Repeat with sling leg 2 on the right front lift provision. Secure the excess chain with Type III nylon cord.

**3.** Loop the chain end of sling leg 3 through the left rear lift provision located on the rear bumper. Place the correct link from Table 7-7 in the grab hook. Place the sling leg in the sling guide on top of the fire unit. Repeat with sling leg 4 on the right rear lift provision.

**4.** Cluster and tie or tape (breakaway technique) the sling legs together on top of the fire unit to prevent entanglement during hookup and lift-off.

*Figure 7-7. Pedestal-Mounted Stinger (Avenger)*

# CHAPTER 8

# CERTIFIED SINGLE-POINT RIGGING PROCEDURES FOR ENGINEER EQUIPMENT

## 8-1. INTRODUCTION

This chapter contains rigging procedures for single-point lift of engineer equipment that has been certified for sling load. Each rigging procedure is found in a paragraph that includes a description of the load, materials required for rigging, and steps to complete the procedure. An applicability paragraph is also a part of each paragraph and identifies the certified loads. The certified single-point rigging procedures for engineer equipment are in this section. Paragraphs 8-2 through 8-40 give detailed instructions for rigging loads.

**NOTE: Reach Pendants may be used on all single point loads. A static discharge person is not required when using a Reach Pendant.**

## 8-2. T-3 Tractor, Crawler

**a. Applicability.** The following items in Table 8-1 are certified for all helicopters with suitable lift capacity by the US Army Soldier Systems Center:

**Table 8-1. T-3 Tractor, Crawler**

| NOMENCLATURE | MAX WEIGHT (POUNDS) | SLING SET | LINK COUNT FRONT/ REAR | RECOMMENDED AIRSPEED (KNOTS) |
|---|---|---|---|---|
| Tractor, Full-Tracked, JD550 with Roll Over Protection System (ROPS), Towing Winch and Hydraulic Angle Blade | 16,662 | 25K | 10/20 | 90 |

**b. Materials.** The following materials are required to rig this load:

**(1)** Sling set (25,000-pound capacity).

**(2)** Tape, adhesive, pressure-sensitive, 2-inch wide roll.

**(3)** Cord, nylon, Type III, 550-pound breaking strength.

**(4)** Webbing, cotton, 1/4-inch, 80-pound breaking strength.

**(5)** Felt sheet, cattle hair, Type IV, 1/2-inch or suitable substitute.

**c. Personnel.** Two persons can prepare and rig this load in 10 minutes.

**d. Procedures.** The following procedures apply to this load:

**(1) Preparation.** Prepare the load using the following steps:

**(a)** Secure the operator's seat cushion to the seat frame with tape or Type III nylon cord.

**(b)** Remove both canopy lights, wrap in padding, and store in the toolbox.

**(c)** Secure all loose covers and panels with tape.

**(d)** Place the transmission in neutral and start the engine. Raise the blade 12 inches above the ground and align the blade at a 90 degree angle to the tractor. Turn the engine off and tape the ignition key in place.

**(2) Rigging.** Rig the load according to the steps in Figure 8-1.

**(3) Hookup.** The hookup team stands on the engine cowl in front of the ROPS. The static wand person discharges the static electricity with the static wand. The hookup person places the apex fitting onto the aircraft cargo hook. The hookup team then moves clear of the load but remains close to the load as the helicopter removes slack from the sling legs. When successful hookup is assured, the hookup team quickly exits the area underneath the helicopter to the designated rendezvous point.

**(4) Derigging.** Derigging is the reverse of the preparation and rigging procedures in steps d (1) and d (2).

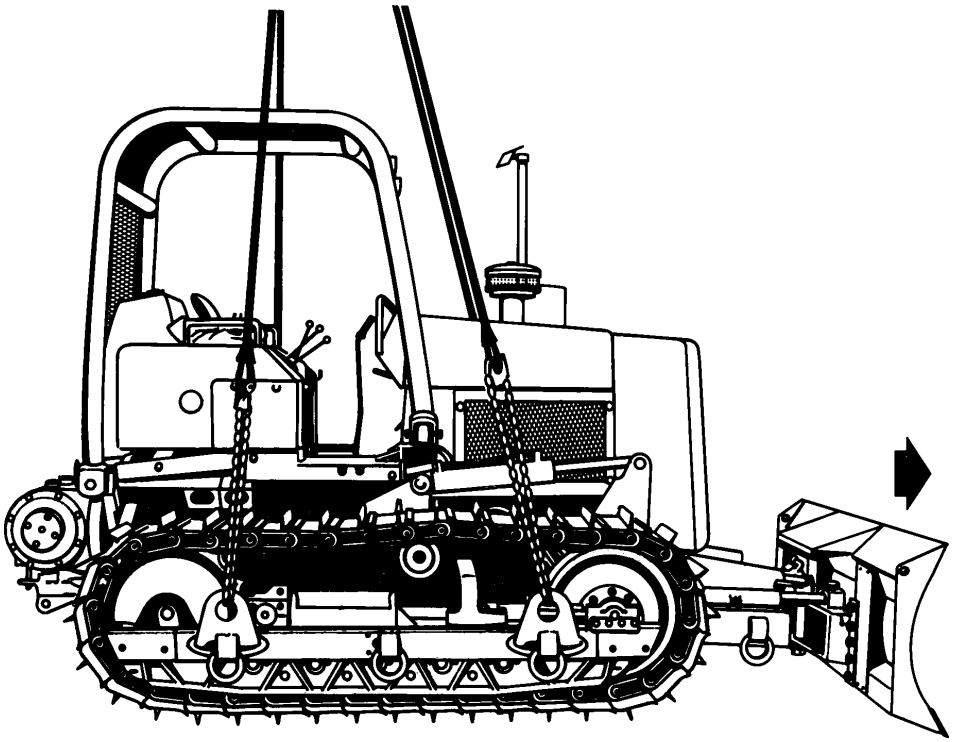

**RIGGING STEPS**

**1.** Position the apex fitting on top of the ROPS. Route outer sling legs 1and 2 to the front of the load. Route inner sling legs 3 and 4 to the rear of the load. Sling legs 1 and 3 must be on the left side of the load.

**2.** Route the chain end of sling leg 1 through the left front lift provision located just aft of the front of the left track. Place the correct link from Table 8-1 in the grab hook. Repeat with sling leg 2 and the right front lift provision located on the right track. Secure the excess chain with Type III nylon cord.

**3.** Route the chain end of sling leg 3 through the left rear lift provision located forward of the left track rear wheel. Place the correct link from Table 8-1 in the grab hook. Repeat with sling leg 4 on the right rear lift provision located on the right track.

**4.** Cluster and tie or tape (breakaway technique) the sling legs together on top of the crew compartment to prevent entanglement during hookup and lift-off.

*Figure 8-1. T-3 Tractor, Crawler*

## 8-3. D5B Tractor, Dozer

**a. Applicability.** The following items in Table 8-2 are certified for all helicopters with suitable lift capacity by the US Army Natick Research, Development, and Engineering Center:

**Table 8-2. D5B Tractor, Dozer**

| NOMENCLATURE | MAX WEIGHT (POUNDS) | SLING SET | LINK COUNT FRONT/REAR | RECOMMENDED AIRSPEED (KNOTS) |
|---|---|---|---|---|
| D5B Tractor, Dozer, Type II, Power Section without ROPS | 18,915 | 25K | 47/8 | 70 |
| D5B Tractor, Dozer, Type II, Track Section | 13,735 | 25K | 21/3 | 90 |

**b. Materials.** The following materials are required to rig this load:

**(1)** Sling set (25,000-pound capacity) (2 each).

**(2)** Tape, adhesive, pressure-sensitive, 2-inch wide roll.

**(3)** Cord, nylon, Type III, 550-pound breaking strength.

**(4)** Webbing, cotton, 1/4-inch, 80-pound breaking strength.

**c. Personnel.** Four persons can sectionalize the dozer in 2 1/2 hours and two persons can prepare and rig this load in 10 minutes.

**d. Procedures.** The following procedures apply to this load:

**(1) Preparation.** Prepare the load using the following steps:

**(a)** Sectionalize the dozer in accordance with the operator's manual. Do not remove the winch or the winch pump.

**(b)** Remove the exhaust stack and secure it on top of the winch with Type III nylon cord.

**(c)** Remove the pre-air cleaner and secure it on the seat with Type III nylon cord.

**(d)** Secure the operator's seat cushion to the seat frame with tape or Type III nylon cord.

**(e)** Tape all lights and gauges.

**(f)** Place the transmission in neutral and secure the safety lock lever with Type III nylon cord.

**(2) Rigging.** Rig the load according to the steps in Figure 8-2.

**NOTE: Hookup of this load presents substantial risk of damage to the load or injury to the hookup personnel. Use of a reach pendant is recommended for this load.**

**(3) Hookup.** The hookup team stands on top of the power or track section. The static wand person discharges the static electricity with the static wand. The hookup person places the apex fitting onto the aircraft cargo hook. The hookup team then moves clear of the load but remains close to the load as the helicopter removes slack from the sling legs. When successful hookup is assured, the hookup team quickly exits the area underneath the helicopter to the designated rendezvous point.

**(4) Derigging.** Derigging is the reverse of the preparation and rigging procedures in steps d (1) and d (2).

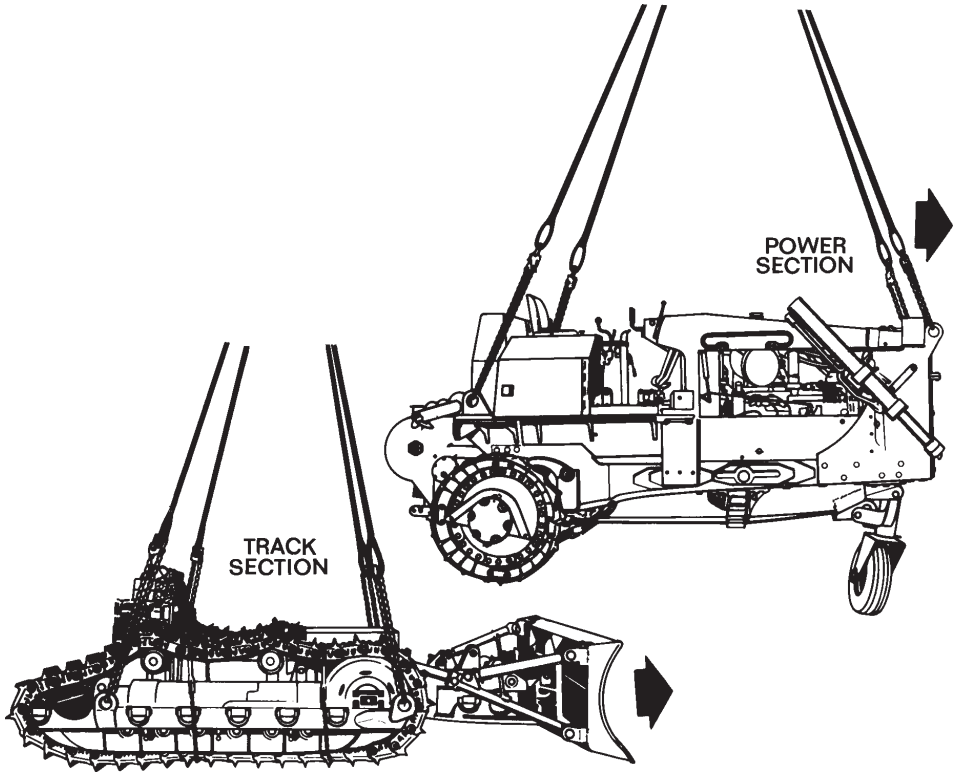


| RIGGING STEPS<br>TRACK SECTION | RIGGING STEPS<br>POWER SECTION |
|---|---|
| **1.** Position the apex fitting on top of the section. Route outer sling legs 1and 2 to the front of the load (blade end). Route inner sling legs 3 and 4 to the rear of the load. Sling legs 1 and 3 must be on the left side of the load. | **1.** Position the apex fitting on top of the section. Route outer sling legs 1and 2 to the front of the load (radiator end). Route inner sling legs 3 and 4 to the rear of the load. Sling legs 1 and 3 must be on the left side of the load. |
| **2.** Route the chain end of sling leg 1 through the left front lift provision. Place the correct link from Table 8-2 in the grab hook. Repeat with sling leg 2 and the right front lift provision. Secure the excess chain with Type III nylon cord. | **2.** Route the chain end of sling leg 1 through the left front lift provision located by the left headlight. Place the correct link from Table 8-2 in the grab hook. Repeat with sling leg 2 and the right front lift provision. Secure the excess chain with Type III nylon cord. |
| **3.** Route the chain end of sling leg 3 through the left rear lift provision. Place the correct link from Table 8-2 in the grab hook. Repeat with sling leg 4 on the right rear lift provision. | **3.** Route the chain end of sling leg 3 through the left rear lift provision located beside the fuel tank. Place the correct link from Table 8-2 in the grab hook. Repeat with sling leg 4 on the right rear lift provision. |
| **4.** Cluster and tie or tape (breakaway technique) the sling legs together on top of the section to prevent entanglement during hookup and lift-off. | **4.** Cluster and tie or tape (breakaway technique) the sling legs together on top of the section to prevent entanglement during hookup and lift-off. |

*Figure 8-2. D5B Tractor, Dozer*

## 8-4. Tractor, Full Tracked, MC1150E

**a. Applicability.** The following item in Table 8-3 is certified for all helicopters with suitable lift capacity by the US Army Natick Research, Development, and Engineering Center:

**Table 8-3. Tractor, Full Tracked, MC1150E**

| NOMENCLATURE | MAX WEIGHT (POUNDS) | SLING SET | LINK COUNT FRONT/REAR | RECOMMENDED AIRSPEED (KNOTS) |
|---|---|---|---|---|
| Tractor, Full-Tracked, MC1150E | 24,062 | 40K | 5/35 | 75 |

**b. Materials.** The following materials are required to rig this load:

**(1)** Sling set (40,000-pound capacity).

**(2)** Tape, adhesive, pressure-sensitive, 2-inch wide roll.

**(3)** Cord, nylon, Type III, 550-pound breaking strength.

**(4)** Webbing, cotton, 1/4-inch, 80-pound breaking strength.

**(5)** Felt sheet, cattle hair, Type IV, 1/2-inch or suitable substitute.

**(6)** Chain, 8-foot length from 40,000-pound capacity sling set with coupling links (2 each).

**(7)** Tie-down chain assembly (10,000-pound capacity), MB-1.

**c. Personnel.** Two persons can prepare and rig this load in 30 minutes.

**d. Procedures.** The following procedures apply to this load:

**(1) Preparation.** Prepare the load using the following steps:

**(a)** Elevate the blade two feet off the ground. Using the tie-down chains, secure the blade in the UP position.

**(b)** Twist the lights on the cab inward. Tape the lights, glass fixtures, and exhaust pipe opening.

**(c)** Ensure all caps, lids, and doors are securely fastened.

**(d)** Place the transmission in neutral and engage the hand brake.

**(2) Rigging.** Rig the load according to the steps in Figure 8-3.

**(3) Hookup.** The hookup team stands on top of the engine deck or cab. The static wand person discharges the static electricity with the static wand. The hookup person places the apex fitting onto the aircraft cargo hook. The hookup team then moves clear of the load but remains close to the load as the helicopter removes slack from the sling legs. When successful hookup is assured, the hookup team quickly exits the area underneath the helicopter to the designated rendezvous point.

**(4) Derigging.** Derigging is the reverse of the preparation and rigging procedures in steps d (1) and d (2).

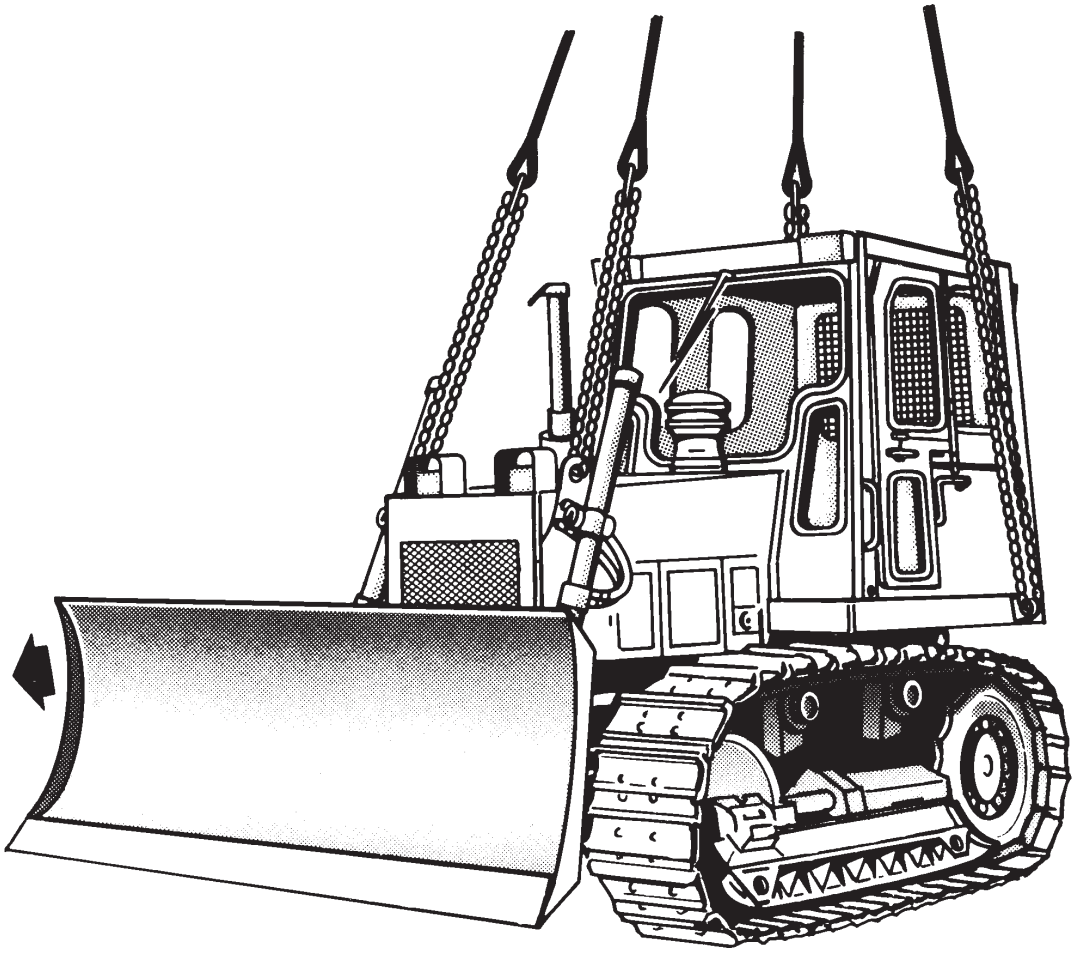

**RIGGING STEPS**

**1.** Position the apex fitting on top of the cab. Route outer sling legs 1and 2 to the front of the load. Route inner sling legs 3 and 4 to the rear of the load. Sling legs 1 and 3 must be on the left side of the load.

**2.** Route the chain end of sling leg 1 through the left front lift provision located on the left front corner of the engine deck. Place the correct link from Table 8-3 in the grab hook. Repeat with sling leg 2 and the right front lift provision. Secure the excess chain with Type III nylon cord.

**3.** Route the chain end of sling leg 3 through the left rear lift provision located near the base of the cab. Using the coupling link add the additional chain length to the sling leg chain. Place the correct link from Table 8-3 in the grab hook. Repeat with sling leg 4 on the right rear lift provision.

**NOTE: Add the additional chain length after the sling leg chain is routed through the lift provision. The link coupling does not fit through the lift provision.**

**4.** Cluster and tie or tape (breakaway technique) the sling legs together on top of the crew compartment to prevent entanglement during hookup and lift-off.

*Figure 8-3. Tractor, Full Tracked, MC1150E*

## 8-5. Tractor, Wheeled, Industrial, Case Model 580

**a. Applicability.** The following item in Table 8-4 is certified for all helicopters with suitable lift capacity by the US Army Natick Research, Development, and Engineering Center:

**Table 8-4. Tractor, Wheeled, Industrial, Case Model 580**

| NOMENCLATURE | MAX WEIGHT (POUNDS) | SLING SET | LINK COUNT FRONT/REAR | RECOMMENDED AIRSPEED (KNOTS) |
|---|---|---|---|---|
| Tractor, Case, 580 | 10,500 | 15K | 30/54 | 80 |

**b. Materials.** The following materials are required to rig this load:

**(1)** Sling set (15,000-pound capacity).

**(2)** Tape, adhesive, pressure-sensitive, 2-inch wide roll.

**(3)** Cord, nylon, Type III, 550-pound breaking strength.

**(4)** Webbing, cotton, 1/4-inch, 80-pound breaking strength.

**(5)** Felt sheet, cattle hair, Type IV, 1/2-inch or suitable substitute.

**(6)** Chain, 6-foot length from 15,000-pound capacity sling set with coupling links (2 each).

**(7)** Tie-down strap, cargo, CGU-1B (2 each).

**c. Personnel.** Two persons can prepare and rig this load in 20 minutes.

**d. Procedures.** The following procedures apply to this load:

**(1) Preparation.** Prepare the load using the following steps:

**(a)** Elevate the front bucket halfway and tilt the bucket toward the rear.

**(b)** Position the rear backhoe arm with the backhoe in the up position and secure with the tie-down straps to prevent the backhoe arm from swinging freely. Route the straps from each stabilizer to the backhoe arm.

**(c)** Ensure all caps, lids, and doors are securely fastened.

**(d)** Tape all lights, glass fixtures, and the exhaust cap closed.

**(e)** Place the transmission in neutral and engage the hand brake.

**(2) Rigging.** Rig the load according to the steps in Figure 8-4.

**(3) Hookup.** The hookup team stands on top of the engine deck or ROPS. The static wand person discharges the static electricity with the static wand. The hookup person places the apex fitting onto the aircraft cargo hook. The hookup team then moves clear of the load but remains close to the load as the helicopter removes slack from the sling legs. When successful hookup is assured, the hookup team quickly exits the area underneath the helicopter to the designated rendezvous point.

**(4) Derigging.** Derigging is the reverse of the preparation and rigging procedures in steps d (1) and d (2).

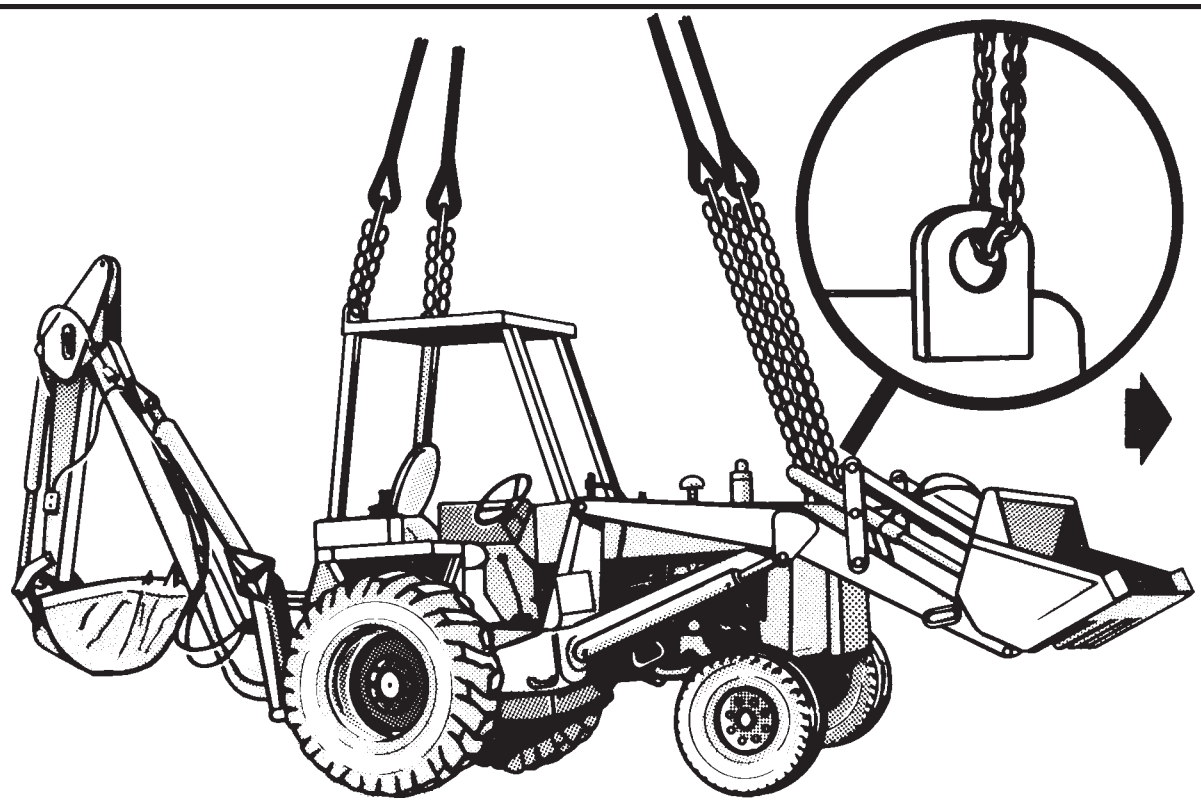

**RIGGING STEPS**

**1.** Position the apex fitting on top of the cab. Route outer sling legs 1and 2 to the front of the load. Route inner sling legs 3 and 4 to the rear of the load. Sling legs 1 and 3 must be on the left side of the load. Using the coupling links, add the additional chain length to sling legs 1and 2.

**2.** Route the chain end of sling leg 1 through the left front lift provision located on the left front corner of the engine hood. Place the correct link from Table 8-4 in the grab hook. Repeat with sling leg 2 and the right front lift provision. Secure the excess chain with Type III nylon cord.

**3.** Route the chain end of sling leg 3 through the left rear lift provision located on the left rear corner of the ROPS. Place the correct link from Table 8-4 in the grab hook. Repeat with sling leg 4 on the right rear lift provision. Secure the excess chain with Type III nylon cord.

**4.** Cluster and tie or tape (breakaway technique) the sling legs together on top of the crew compartment to prevent entanglement during hookup and lift-off.

***Figure 8-4. Tractor, Wheeled, Industrial, Case Model 580***

## 8-6. Small Emplacement Excavator (SEE)

**a. Applicability.** The following item in Table 8-5 is certified for all helicopters with suitable lift capacity by the US Army Natick Research, Development, and Engineering Center:

**Table 8-5. Small Emplacement Excavator (SEE)**

| NOMENCLATURE | MAX WEIGHT (POUNDS) | SLING SET | LINK COUNT FRONT/REAR | RECOMMENDED AIRSPEED (KNOTS) |
|---|---|---|---|---|
| Small Emplacement Excavator (SEE) | 16,240 | 25K | Listed in Rigging Steps | 95 |

**b. Materials.** The following materials are required to rig this load:

**(1)** Sling set (25,000-pound capacity).

**(2)** Tape, adhesive, pressure-sensitive, 2-inch wide roll.

**(3)** Cord, nylon, Type III, 550-pound breaking strength.

**(4)** Webbing, cotton, 1/4-inch, 80-pound breaking strength.

**(5)** Felt sheet, cattle hair, Type IV, 1/2-inch or suitable substitute.

**c. Personnel.** Two persons can prepare and rig this load in 30 minutes.

**d. Procedures.** The following procedures apply to this load:

**(1) Preparation.** Prepare the load using the following steps:

**(a)** Elevate the bucket halfway and tilt the bucket toward the rear. Ensure the front end loader assembly travel locks, located at the ends of both front end loader boom cylinders, are properly pinned in place.

**(b)** Secure the steering wheel, doors, and all loose equipment with tape or Type III nylon cord.

**(c)** Tape all lights, glass fixtures, and the exhaust cap closed.

**(d)** Fold the side mirrors inboard and tie or tape as required. Tape the windshield wipers to the windshield. Secure the engine compartment hood with Type III nylon cord.

**(e)** Place the transmission in neutral and engage the hand brake.

**(f)** Tie or tape the hydraulic lines and hoses in close proximity to the forward lift provisions to prevent possible entanglement during hookup.

**(2) Rigging.** Rig the load according to the steps in Figure 8-5.

**NOTE: Hookup of this load presents substantial risk of damage to the load or injury to the hookup personnel. Use of a reach pendant is recommended for this load.**

**(3) Hookup.** The hookup team stands on top of the falling objects protection systems (FOPS). The static wand person discharges the static electricity with the static wand. The hookup person places the apex fitting onto the aircraft cargo hook. The hookup team then moves clear of the load but remains close to the load as the helicopter removes slack from the sling legs. When successful hookup is assured, the hookup team quickly exits the area underneath the helicopter to the designated rendezvous point.

**(4) Derigging.** Derigging is the reverse of the preparation and rigging procedures in steps d (1) and d (2).

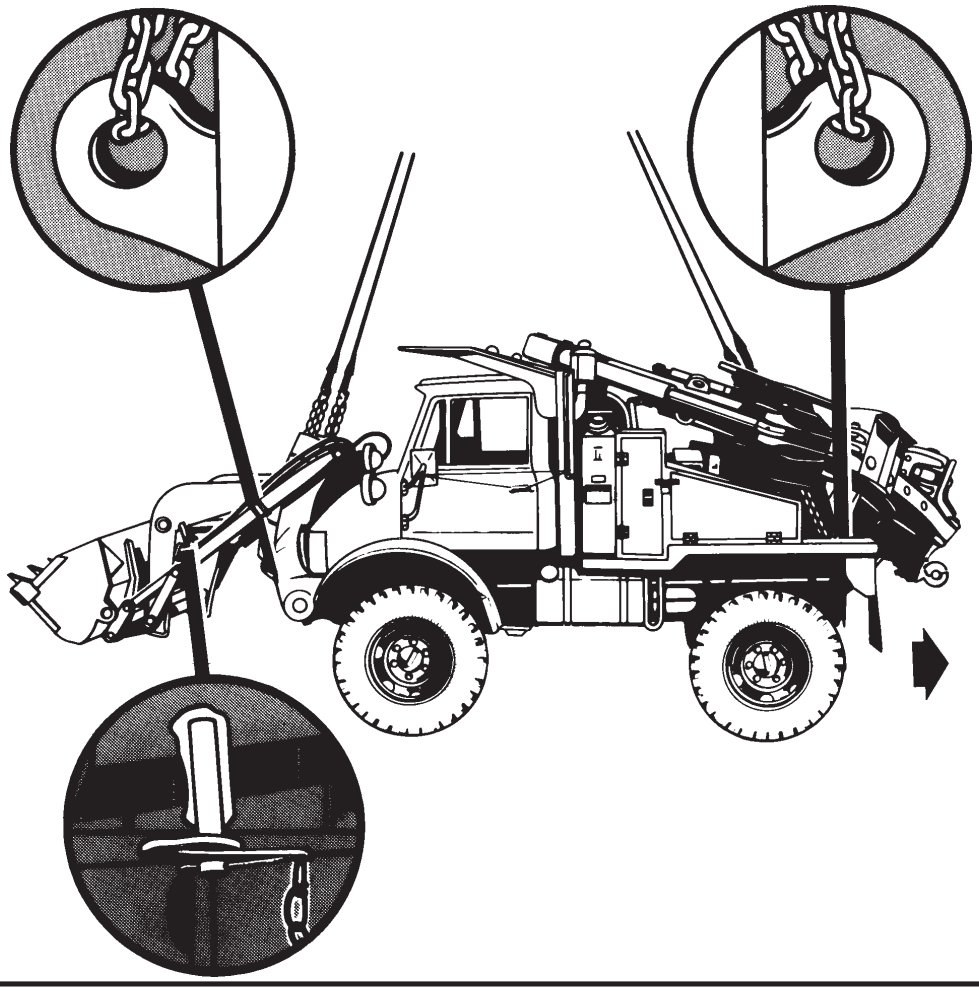

**RIGGING STEPS**

**1.** Position the apex fitting on top of the FOPS. Route outer sling legs 1and 2 to the front of the load. Route inner sling legs 3 and 4 to the rear of the load (backhoe bucket end). Sling legs 1 and 3 must be on the left side of the load.

**2.** Route the chain end of sling leg 1 through the left front lift provision located on the front bumper inboard of the front end loader left support arm. Insert link 3 in the grab hook. Repeat with sling leg 2 and the right front lift provision inboard of the right support arm.

**3.** Route the chain end of sling leg 3 through the left rear lift provision located (closest to the backhoe operators seat) on the top left between the left rear wheel and frame. Insert link 5 in the grab hook.

**4.** Route the chain end of sling leg 4 through the right rear lift provision located (closest to the backhoe bucket) on the top right between the right rear wheel and frame. Insert link 10 in the grab hook. Secure the excess chain with Type III nylon cord.

**5.** Place felt padding around all the chains. Secure the padding with tape or Type III nylon cord.

**6.** Cluster and tie or tape (breakaway technique) the sling legs together on top of the crew compartment to prevent entanglement during hookup and lift-off.

*Figure 8-5. Small Emplacement Excavator (SEE)*

## 8-7. High Mobility Materiel Handler (HMMH)

**a. Applicability.** The following item in Table 8-6 is certified for all helicopters with suitable lift capacity by the US Army Natick Research, Development, and Engineering Center:

**Table 8-6. High Mobility Materiel Handler (HMMH)**

| NOMENCLATURE | MAX WEIGHT (POUNDS) | SLING SET | LINK COUNT FRONT/REAR | RECOMMENDED AIRSPEED (KNOTS) |
|---|---|---|---|---|
| High Mobility Materiel Handler | 15,650 | 25K | 3/56 | 115 |

**b. Materials.** The following materials are required to rig this load:

**(1)** Sling set (25,000-pound capacity).

**(2)** Tape, adhesive, pressure-sensitive, 2-inch wide roll.

**(3)** Cord, nylon, Type III, 550-pound breaking strength.

**(4)** Webbing, cotton, 1/4-inch, 80-pound breaking strength.

**(5)** Felt sheet, cattle hair, Type IV, 1/2-inch or suitable substitute.

**c. Personnel.** Two persons can prepare and rig this load in 30 minutes.

**d. Procedures.** The following procedures apply to this load:

**(1) Preparation.** Prepare the load using the following steps:

**(a)** Ensure all travel locks are properly pinned in place.

**(b)** Secure the steering wheel, doors, and all loose equipment with tape or Type III nylon cord.

**(c)** Tape all lights, glass fixtures, and the exhaust cap closed.

**(d)** Fold the side mirrors inboard and tie or tape as required. Tape the windshield wipers to the windshield. Secure the engine compartment hood with Type III nylon cord.

**(e)** Place the transmission in neutral and engage the hand brake.

**(f)** Tie or tape the hydraulic lines and hoses in close proximity to the forward lift provisions to prevent possible entanglement during hookup.

**(2) Rigging.** Rig the load according to the steps in Figure 8-6.

**NOTE: Hookup of this load presents substantial risk of damage to the load or injury to the hookup personnel. Use of a reach pendant is recommended for this load.**

**(3) Hookup.** The hookup team stands on top of the falling objects protection systems (FOPS). The static wand person discharges the static electricity with the static wand. The hookup person places the apex fitting onto the aircraft cargo hook. The hookup team then moves clear of the load but remains close to the load as the helicopter removes slack from the sling legs. When successful hookup is assured, the hookup team quickly exits the area underneath the helicopter to the designated rendezvous point.

**(4) Derigging.** Derigging is the reverse of the preparation and rigging procedures in steps d (1) and d (2).

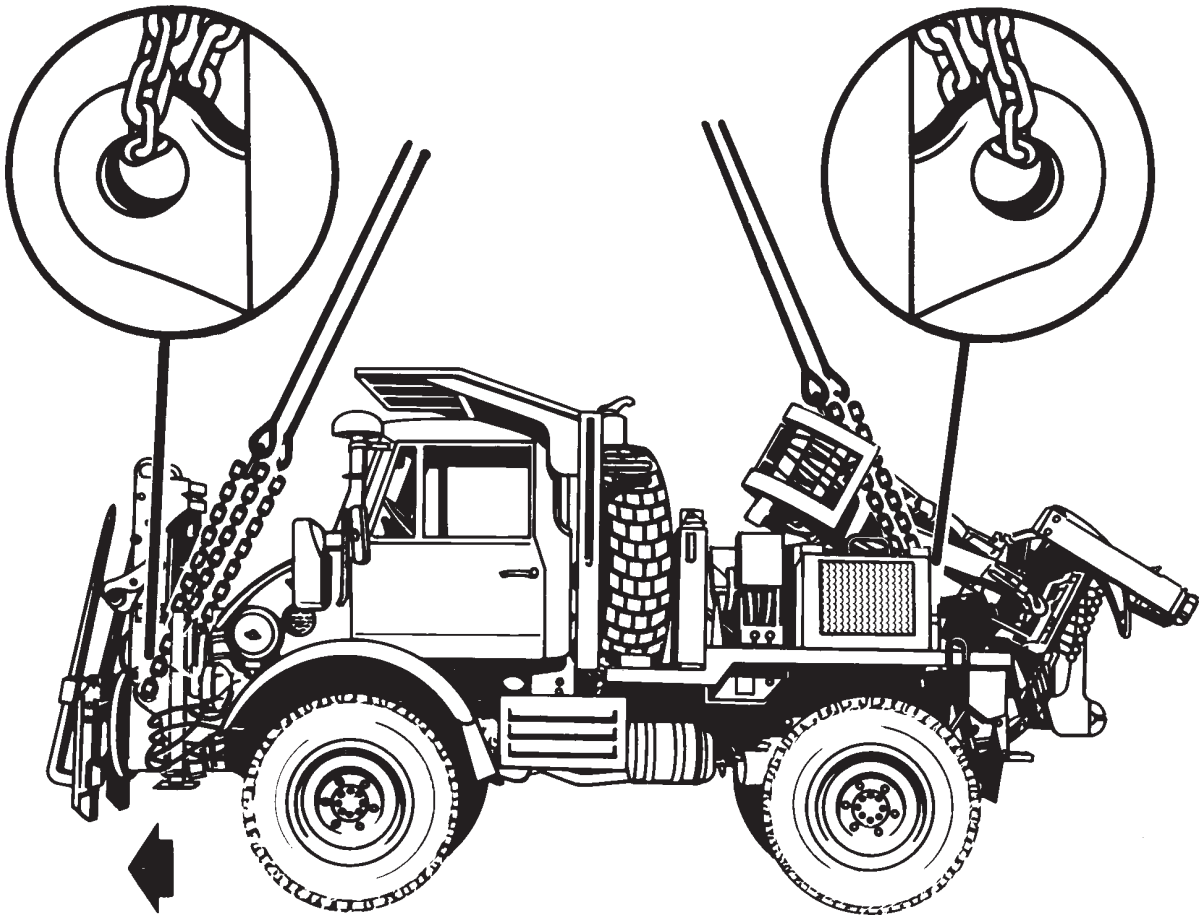

**RIGGING STEPS**

**1.** Position the apex fitting on top of the FOPS. Route outer sling legs 1and 2 to the front of the load. Route inner sling legs 3 and 4 to the rear of the load. Sling legs 1 and 3 must be on the left side of the load.

**2.** Route the chain end of sling leg 1 through the left front lift provision located near the front bumper outboard of the forklift frame. Place the correct link from Table 8-6 in the grab hook. Repeat with sling leg 2 and the right front lift provision.

**3.** Route the chain end of sling leg 3 through the left rear lift provision located on the frame inboard of the rear wheel. Place the correct link from Table 8-6 in the grab hook. Repeat with sling leg 4 on the right rear lift provision. Secure the excess chain with Type III nylon cord.

**4.** Place felt padding around all the chains. Secure the padding with tape or Type III nylon cord.

**5.** Cluster and tie or tape (breakaway technique) the sling legs together on top of the FOPS to prevent entanglement during hookup and lift-off.

*Figure 8-6. High Mobility Materiel Handler (HMMH)*

## 8-8. Ditching Machine

**a. Applicability.** The following item in Table 8-7 is certified for all helicopters with suitable lift capacity by the US Army Natick Research, Development, and Engineering Center:

**Table 8-7. Ditching Machine**

| NOMENCLATURE | MAX WEIGHT (POUNDS) | SLING SET | LINK COUNT FRONT/REAR | RECOMMENDED AIRSPEED (KNOTS) |
|---|---|---|---|---|
| Ditching Machine | 3,340 | 15K | 3/20 | 100 |

**b. Materials.** The following materials are required to rig this load:

**(1)** Sling set (15,000-pound capacity).

**(2)** Tape, adhesive, pressure-sensitive, 2-inch wide roll.

**(3)** Cord, nylon, Type III, 550-pound breaking strength.

**(4)** Webbing, cotton, 1/4-inch, 80-pound breaking strength.

**(5)** Felt sheet, cattle hair, Type IV, 1/2-inch or suitable substitute.

**c. Personnel.** Two persons can prepare and rig this load in 15 minutes.

**d. Procedures.** The following procedures apply to this load:

**(1) Preparation.** Prepare the load using the following steps:

**(a)** Raise the blade on the front of the vehicle and the digging chain on the rear of the vehicle.

**(b)** Ensure the fuel tank is not over 3/4 full. Inspect the fuel tank cap, oil filter cap, and the battery caps for proper installation.

**(c)** Place the transmission in neutral and engage the parking brake.

**(d)** Ensure the front wheels are pointed straight ahead and tie the steering wheel in place with Type III nylon cord.

**(e)** Secure the hood latches with type III nylon cord.

**(2) Rigging.** Rig the load according to the steps in Figure 8-7.

**(3) Hookup.** The hookup team stands on the hood of the vehicle. The static wand person discharges the static electricity with the static wand. The hookup person places the apex fitting onto the aircraft cargo hook. The hookup team then moves clear of the load but remains close to the load as the helicopter removes slack from the sling legs. When successful hookup is assured, the hookup team quickly exits the area underneath the helicopter to the designated rendezvous point.

**(4) Derigging.** Derigging is the reverse of the preparation and rigging procedures in steps d (1) and d (2).

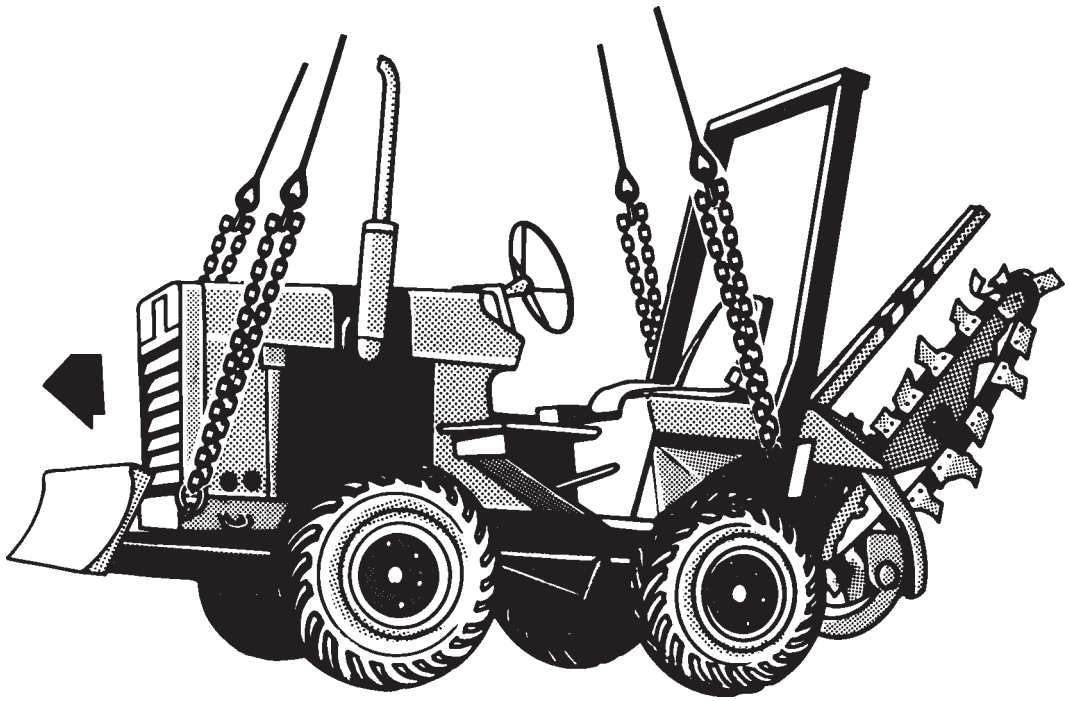

**RIGGING STEPS**

**1.** Position the apex fitting on the hood of the vehicle. Route outer sling legs 1and 2 to the front of the load (blade end). Route inner sling legs 3 and 4 to the rear of the load. Sling legs 1 and 3 must be on the left side of the load.

**2.** Route the chain end of sling leg 1 through the left front lift provision located at the front bottom of the frame. Place the correct link from Table 8-7 in the grab hook. Repeat with sling leg 2 and the right front lift provision.

**3.** Route the chain end of sling leg 3 through the left rear lift provision located below the rollover bar. Place the correct link from Table 8-7 in the grab hook. Repeat with sling leg 4 on the right rear lift provision. Secure the excess chain with Type III nylon cord.

**4.** Place felt padding around all the chains where they contact the vehicle. Secure the padding with tape or Type III nylon cord.

**5.** Raise the apex fitting above the hood of the vehicle. Ensure the front slings are in front of the exhaust stack and the rear slings are in front of the rollover bar.

**6.** Cluster and tie or tape (breakaway technique) the sling legs together on top of the FOPS to prevent entanglement during hookup and lift-off.

***Figure 8-7. Ditching Machine***

## 8-9. 950BS Scoop Loader

**a. Applicability.** The following items in Table 8-8 are certified for all helicopters with suitable lift capacity by the US Army Natick Research, Development, and Engineering Center:

**Table 8-8. 950BS Scoop Loader**

| NOMENCLATURE | MAX WEIGHT (POUNDS) | SLING SET | LINK COUNT FRONT/REAR | RECOMMENDED AIRSPEED (KNOTS) |
|---|---|---|---|---|
| Loader, Scoop, 950BS (Type II), Work Section | 15,830 | 25K | 10/5 | 100 |
| Loader, Scoop, 950BS (Type II), Power Section | 16,110 | 25K | 10/20 | 90 |

**b. Materials.** The following materials are required to rig this load:

**(1)** Sling set (25,000-pound capacity).

**(2)** Chain, 8-foot length from a 25,000-pound capacity sling set with coupling links.

**(3)** Cord, nylon, Type III, 550-pound breaking strength.

**(4)** Webbing, cotton, 1/4-inch, 80-pound breaking strength.

**(5)** Felt sheet, cattle hair, Type IV, 1/2-inch or suitable substitute.

**(6)** Tape, adhesive, pressure-sensitive, 2-inch wide roll.

**(7)** Tie-down assembly, 15-foot dacron (2 each).

**(8)** Tie-down assembly, chain, MB-1 (2 each).

**(9)** Plastic bags (4 each).

**c. Personnel.** Four persons can sectionalize the scoop loader in 2 1/2 hours. Two persons can prepare and rig this load in 20 minutes per section.

**d. Procedures.** The following procedures apply to this load:

**(1) Preparation.** Prepare the load using the following steps:

**(a)** Sectionalize the loader according to the instructions provided in the operator's manual.

**(b)** Secure the bucket lift arm assembly to the work section housing with two MB-1 chain tie-down assemblies. Pass a chain around the left side of the bucket control group arm crosstube through the lift point on the housing, and secure the running ends with an MB-1 tensioning device. Repeat this procedure on the right side of the crosstube.

**CAUTION**
**Chains must be tight to prevent sagging of the hydraulic system during flight.**

**(c)** Cover all hitch pins and pivot holes with plastic and tape to prevent contamination by dust and dirt.

**(d)** Secure tool basket lid, located in the bucket, with nylon cord. Tape all lights.

**(e)** Secure all hoses and cables located on front of the power section, with nylon cord to prevent damage.

**(f)** Secure the floating axle in level position with two 15-foot tie-down assemblies. On the left side, pass the running end of a 15-foot tie-down strap down through the tie-down provision aft of the axle, under the axle, and up

through the tie-down provision forward of the axle. Secure the running ends of the strap using a D-ring and load binder on top of the axle. Repeat this procedure on the right side. Fold and secure excess webbing and loadbinder with cotton webbing or tape.

**(g)** Install the low-velocity airdrop suspension provisions on the left and right sides of the operator's platform. (These provisions are used as forward lift points for sling loading.) Torque mounting bolts to 640 + 80 foot-pounds.

**(h)** Remove exhaust stack and stow on the component tray, mounted in the work section bucket. Cover opening of exhaust stack with tape.

**(i)** Remove the pre-air cleaner and pad with cellulose padding and stow in the stowage compartment located behind the operator's seat. Cover opening of pre-air cleaner with tape.

**(j)** Fold the back of the operator seat down and secure in place with nylon cord. Secure the seat belt over the seat back.

**(k)** Tape all lights and instruments.

**(l)** Secure all doors and covers with tape or nylon cord.

**(m)** Place controls in neutral and release brakes.

**(2) Rigging.** Rig the load according to the steps in Figure 8-8.

**(3) Hookup.** The hookup team stands on the wheels or fender of the work section and on the operator's platform of the power section. The static wand person discharges the static electricity with the static wand. The hookup person places the apex fitting onto the aircraft cargo hook. The hookup team then moves clear of the load but remains close to the load as the helicopter removes slack from the sling legs. When successful hookup is assured, the hookup team quickly exits the area underneath the helicopter to the designated rendezvous point.

**(4) Derigging.** Derigging is the reverse of the preparation and rigging procedures in steps d (1) and d (2).

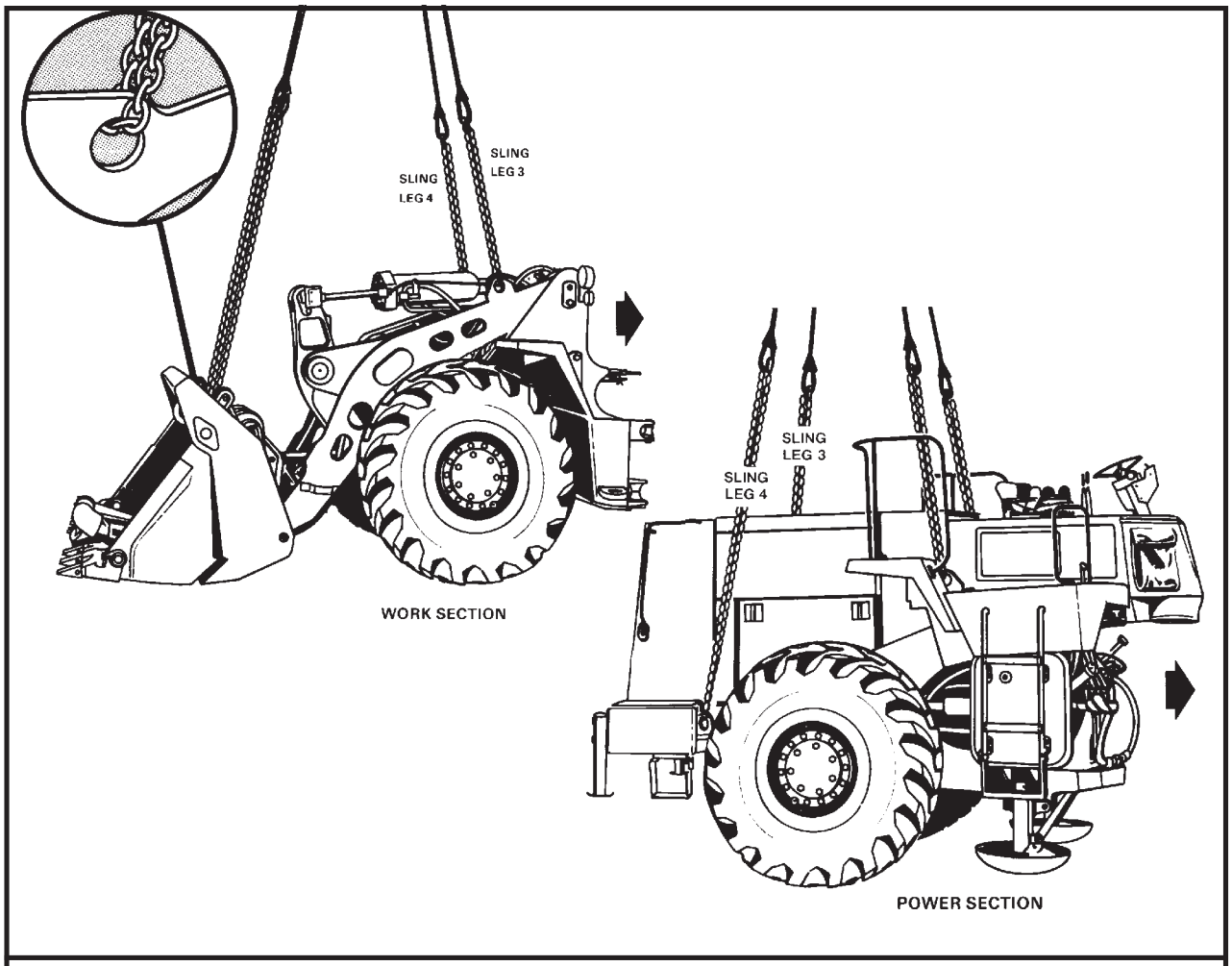


**RIGGING STEPS (WORK SECTION)**

**1.** Lay out a 25,000-pound sling set and connect the additional 8-foot chain sections to sling legs 1 and 2 using the proper coupling links.

**2.** Position apex fitting on top of the hydraulic cylinder. Route outer sling legs 1 and 2 to the bucket end of the load and the inner sling legs 3 and 4 to the aft end. Sling legs 1 and 3 should be on the left side of the load.

**3.** Pass the chain end of sling leg 1 through the left front lift provision, located on the left side of the back of the bucket. Place the correct link from Table 8-8 in the grab hook. Repeat with sling leg 2 on the right front lift provision on the right side of the bucket. Secure the excess chain with Type III nylon cord.

**4.** Loop the chain end of sling leg 3 through the left rear lift provision, located on top of the control group left support arm. Place the correct link from Table 8-8 in the grab hook. Repeat with sling leg 4 on the right rear lift provision on the right arm.

**5.** Cluster and tie or tape (breakaway technique) all sling legs together to prevent entanglement during hookup and lift-off.

*Figure 8-8. 950BS Scoop Loader*

**RIGGING STEPS (POWER SECTION)**

**1.** Lay out a 25,000-pound sling set and connect the additional 8-foot chain sections to sling legs 3 and 4 using the proper coupling links.

**2.** Position apex fitting on the engine hood. Route outer sling legs 1 and 2 to the front of the load (operator's seat) and inner sling legs 3 and 4 to the rear of the load (bumper end). Sling legs 1 and 3 should be on the left side of the load.

**3.** Loop the chain end of sling leg 1 through the left front lift provision located to the left of the operator's seat above the fuel tank. Place the correct link from Table 8-8 in the grab hook. Repeat with sling leg 2 on the right front lift provision.

**4.** Loop the chain end of sling leg 3 through the left rear lift provision located on the forward edge of the battery box aft of the left wheel. Place the correct link from Table 8-8 in the grab hook. Repeat with sling leg 4 on the right rear lift provision. Secure the excess chain with Type III nylon cord.

**WARNING**

**DO NOT ATTACH SLING LEGS 3 AND 4 TO FRAME LIFTING PROVISIONS LOCATED ON THE FRAME. SLINGS ATTACHED TO THESE PROVISIONS MAY CAUSE LOSS OF THE LOAD IN FLIGHT.**

**5.** Pull sling legs up on top of the engine hood and secure together with cotton webbing. Cluster and tie or tape (breakaway technique) all sling legs together to prevent entanglement during hookup and lift-off.

*Figure 8-8. 950BS Scoop Loader (continued)*

## 8-10. 130GS Grader

**a. Applicability.** The following items in Table 8-9 are certified for all helicopters with suitable lift capacity by the US Army Natick Research, Development, and Engineering Center:

**Table 8-9. 130GS Grader**

| NOMENCLATURE | MAX WEIGHT (POUNDS) | SLING SET | LINK COUNT FRONT/REAR | RECOMMENDED AIRSPEED (KNOTS) |
|---|---|---|---|---|
| 130GS Grader, Front Section with Scarifier and ROPS and Low-Velocity Airdrop (LVAD) suspension provisions removed | 16,120 | 25K | 3/77 | 100 |
| 130GS Grader, Rear Section | 14,270 | 25K | 46/56 | 100 |

**b. Materials.** The following materials are required to rig this load:

**(1)** Sling set (25,000-pound capacity).

**(2)** Tape, adhesive, pressure-sensitive, 2-inch wide roll.

**(3)** Cord, nylon, Type III, 550-pound breaking strength.

**(4)** Webbing, cotton, 1/4-inch, 80-pound breaking strength.

**(5)** Felt sheet, cattle hair, Type IV, 1/2-inch or suitable substitute.

**(6)** Tie-down, cargo, CGU-1B (2 each).

**(7)** Plastic bags (4 each).

**(8)** Posts, wooden, 4- x 4- x 48-inch (2 each).

**c. Personnel.** Two persons can prepare and rig each load in 20 minutes after the ROPS and LVAD suspension provisions are removed and the grader is sectionalized.

**d. Procedures.** The following procedures apply to this load:

**(1) Preparation.** Prepare the load using the following steps:

**(a)** Sectionalize the loader according to the instructions provided in the operator's manual.

**(b)** Remove ROPS and LVAD suspension provisions mounted on the front bolster.

**(c)** Ensure the fuel tank is not over 3/4 full.

**(d)** Use a tie-down assembly to secure each side of the front axle to front tie-down points on the front end.

**(e)** Loosen front headlight bar, rotate forward 180 degrees, and retighten. Pad lights with padding and tape.

**(f)** Tape work lights on forward edge of operator's platform.

**(g)** Secure steering wheel to horizontal control bar with nylon cord on both sides. Secure seat with nylon cord.

**(h)** Cover all pivot points in the articulated hitch group with plastic bags or a suitable substitute and tape securely to prevent fouling by sand and dirt.

**(i)** Remove throttle handle and secure in toolbox.

**(j)** Pad instrument panel with cellulose padding and tape.

**(k)** Remove air cleaner and exhaust stack and secure

to top rail with nylon cord.

**(l)** Tie 4- x 4- x 48-inch posts to inside rear guardrail on the rear section with nylon cord.

**(m)** Pad and tape rear working light and taillights.

**(n)** Secure doors with one loop of nylon cord horizontally around the body of the unit.

**(2) Rigging.** Rig the load according to the steps in Figure 8-9.

**(3) Hookup.** The hookup team stands on top of each section. The static wand person discharges the static electricity with the static wand. The hookup person places the apex fitting onto the aircraft cargo hook. The hookup team then moves clear of the load but remains close to the load as the helicopter removes slack from the sling legs. When successful hookup is assured, the hookup team quickly exits the area underneath the helicopter to the designated rendezvous point.

**(4) Derigging.** Derigging is the reverse of the preparation and rigging procedures in steps d (1) and d (2).

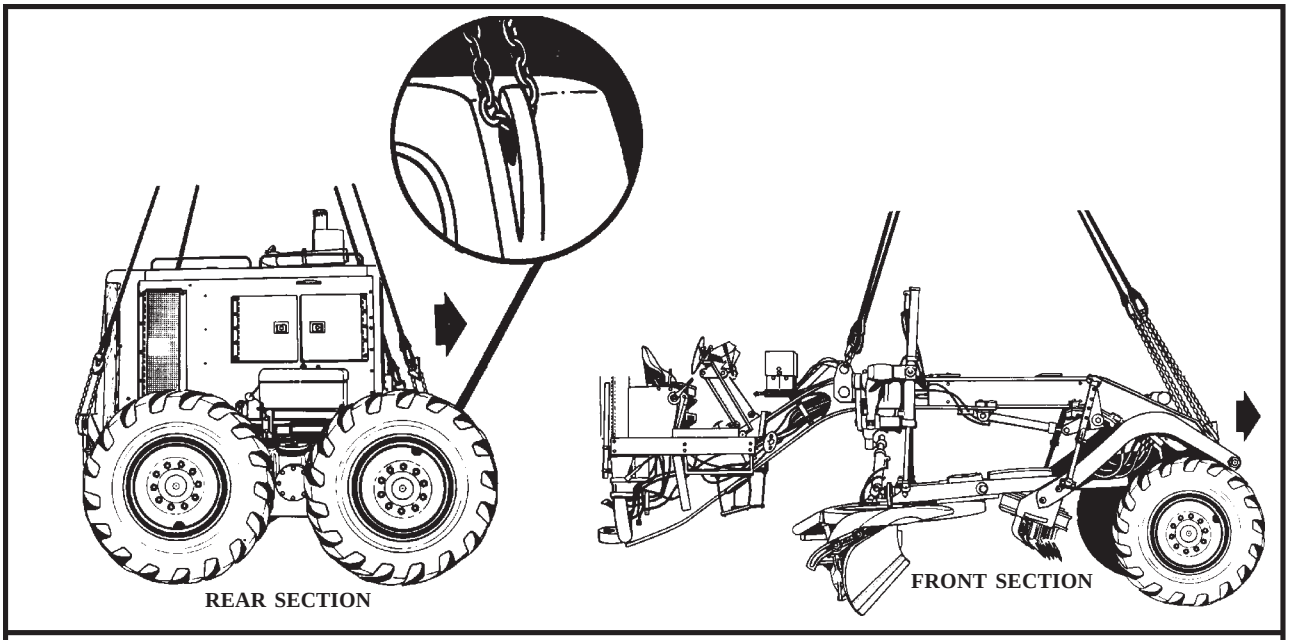


**RIGGING STEPS (REAR SECTION)**

**1.** Position the apex fitting on top of the engine compartment. Route outer sling legs 1 and 2 to the front (forward wheel) end and inner sling legs 3 and 4 to the rear (radiator) end of the rear section. Sling legs1 and 3 should be on the left side of the load.

**2.** Loop the chain end of sling leg 1 through the left front lift provision located inboard of the left front wheel Place the correct link from Table 8-9 in the grab hook. Repeat with sling leg 2 on the right front lift provision.

**3.** Loop the chain end of sling leg 3 through the left rear lift provision located aft of the left rear wheel. Place the correct link from Table 8-9 in the grab hook. Repeat with sling leg 4 on the right rear lift provision.

**4.** Cluster and tie or tape (breakaway technique) all sling legs together to prevent entanglement during hookup and lift-off. Ensure the sling legs are located outside of the 4- x 4- x 48-inch posts.

*Figure 8-9. 130GS Grader*

**RIGGING STEPS (FRONT SECTION)**

**1.** Position apex fitting on top of the front section. Route outer sling legs 1 and 2 to the front (wheel end) of the section and inner sling legs 3 and 4 to the rear end. Sling legs 1 and 3 should be on the left side of the load.

**2.** Loop the chain end of sling leg 1 through the left front lift provision by the left wheel. Place the correct link from Table 8-9 in the grab hook. Repeat with sling leg 2 on the right front lift provision.

**3.** Loop the chain end of sling leg 3 through the left rear lift provision above the blade. Place the correct link from Table 8-9 in the grab hook. Repeat with sling leg 4 on the right rear lift provision. Secure excess chain with tape or nylon cord.

**4.** Cluster and tie or tape (breakaway technique) all sling legs together to prevent entanglement during hookup and lift-off.

*Figure 8-9. 130GS Grader (continued)*

## 8-11. 613BS Scraper, Elevating

**a. Applicability.** The following items in Table 8-10 are certified for all helicopters with suitable lift capacity by the US Army Natick Research, Development, and Engineering Center:

**Table 8-10. 613BS Scraper, Elevating**

| NOMENCLATURE | MAX WEIGHT (POUNDS) | SLING SET | LINK COUNT FRONT/REAR | RECOMMENDED AIRSPEED (KNOTS) |
|---|---|---|---|---|
| 613BS Scraper, Elevating, Work Section | 16,330 | 25K | 3/40 | 110 |
| 613BS Scraper, Elevating, Power Section | 16,860 | 25K | Listed in Rigging Steps | 110 |

**b. Materials.** The following materials are required to rig this load:

**(1)** Sling set (25,000-pound capacity).

**(2)** Tape, adhesive, pressure-sensitive, 2-inch wide roll.

**(3)** Cord, nylon, Type III, 550-pound breaking strength.

**(4)** Webbing, cotton, 1/4-inch, 80-pound breaking strength.

**(5)** Felt sheet, cattle hair, Type IV, 1/2-inch or suitable substitute.

**(6)** Plastic bags (4 each).

**(7)** Plywood, 3/4- x 8- x 46-inch (2 each).

**c. Personnel.** Four persons can sectionalize the scraper in 1 hour. Two persons can prepare and rig each load in 20 minutes.

**d. Procedures.** The following procedures apply to this load:

**(1) Preparation.** Prepare the load using the following steps:

**(a)** Sectionalize the scaper according to the instructions provided in the operator's manual.

**(b)** Secure the operator's seat with Type III nylon cord.

**(c)** Secure all covers and doors with tape or Type III nylon cord.

**(d)** Secure auxiliary fuel tank in place with Type III nylon cord.

**(e)** Stow elevator motor hoses and hanger arms on elevator flights in the bowl, and secure with nylon cord.

**(f)** Secure hydraulic cylinders up in a stowed position with doubled nylon cord.

**(g)** Secure loose hoses and cables with Type III nylon cord.

**(h)** Fold and secure the steps located on outside of the bowl.

**(i)** Tape all lights.

**(j)** Cover all hitch pins and pin holes with plastic and tape to prevent contamination by dirt and dust.

**(k)** Secure toolbox lid closed with nylon cord.

**(l)** Ensure that steering wheels are aligned.

**(m)** Install front bumper lift provision. Ensure that pin safety clip is installed. If clip is missing, secure the pin in place with nylon cord.

**(n)** Fabricate a hood protection from two pieces of 3/4- x 8- x 46-inch plywood. Nail plywood together forming an L-shaped protector. Drill two 1/2-inch holes in each corner for restraint. Plywood will protect the top edge of the radiator grill where it meets the hood.

**(o)** Place felt padding over the headlights and tape in place.

**(p)** Position the plywood protector on the hood and secure in place at four corners with nylon cord.

**CAUTION**
**Plywood hood protector is essential to prevent hood damage by sling leg chains.**

**(2) Rigging.** Rig the load according to the steps in Figure 8-10.

**(3) Hookup.** The hookup team stands on top of each section. The static wand person discharges the static electricity with the static wand. The hookup person places the apex fitting onto the aircraft cargo hook. The hookup team then moves clear of the load but remains close to the load as the helicopter removes slack from the sling legs. When successful hookup is assured, the hookup team quickly exits the area underneath the helicopter to the designated rendezvous point.

**(4) Derigging.** Derigging is the reverse of the preparation and rigging procedures in steps d (1) and d (2).

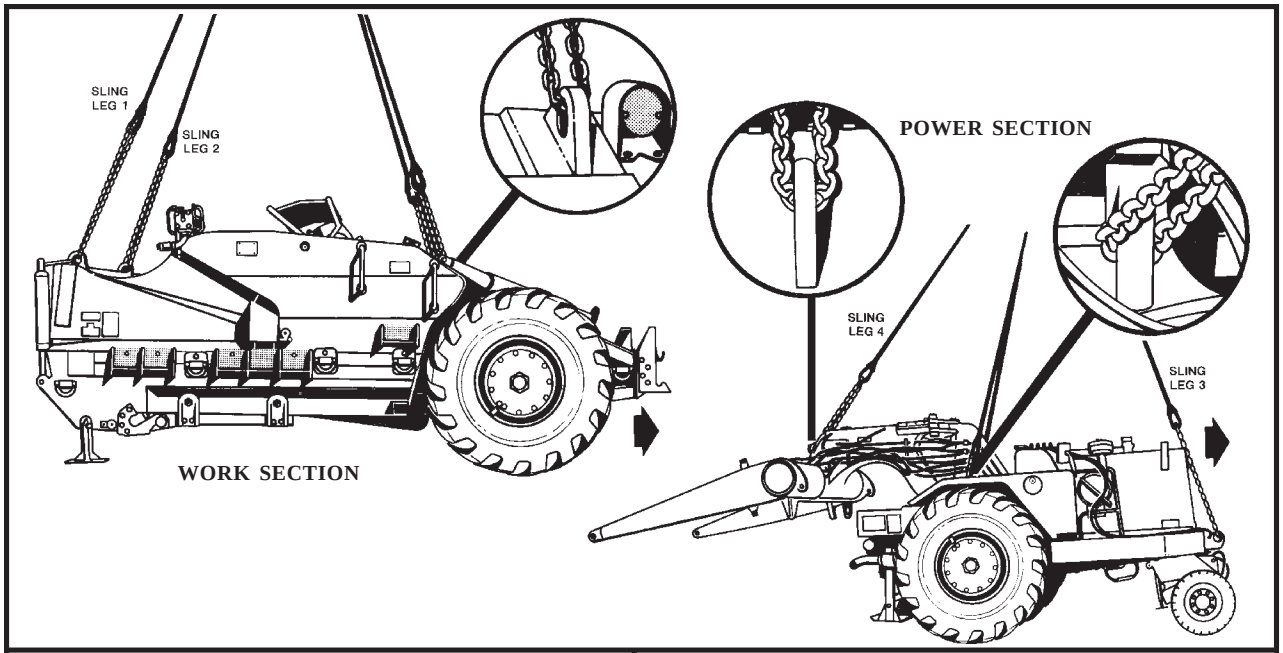


| RIGGING STEPS (WORK SECTION) | RIGGING STEPS (POWER SECTION) |
|---|---|
| **1.** Place apex fitting on top of rockguard and route outer sling legs 1 and 2 to forward end of load and inner sling legs 3 and 4 to aft (bumper) end. Sling legs 1 and 3 must be on the left side of the load. | **1.** Position apex fitting on top of the engine hood. Route outer sling legs 1 and 2 to the center of the power section by the main wheels. Route inner sling leg 3 forward to the front bumper and the other inner sling leg 4 to the arm assembly frame. |
| **2.** Loop the chain end of sling leg 1 through the left front lift provision located on the left front corner of the bowl. Place the correct link from Table 8-10 in the grab hook. Repeat with sling leg 2 on the right front lift provision on the right front corner. | **2.** Loop the chain end of sling leg 1 through the left center lift provision to the left of the operator's seat and insert link 40 in the grab hook. Repeat with sling leg 2 on the right center lift provision. |
| **3.** Pull both sling legs aft and secure (breakaway technique) to elevator and rockguard with cotton webbing or tape. | **3.** Loop the chain end of sling leg 3 through the front bumper lift provision located in the center of the bumper and insert link 3 in the grab hook. Pull the sling leg up over the hood protector and tape or tie (breakaway technique) the sling leg to the ROPS mount. |
| **4.** Loop the chain end of sling leg 3 through the left rear lift fitting located on the aft deck above the left wheel. Place the correct link from Table 8-10 in the grab hook. Repeat with sling leg 4 on the right rear lift provision. Secure excess chain with tape or nylon cord. | **4.** Loop the chain end of sling leg 4 through the lift provision located on the center top of the draft arm assembly frame and insert link 24 in grab hook. Tape or tie (breakaway technique) the sling leg to the top of the draft arm. Secure excess chain with tape or nylon cord. |
| **5.** Pull both sling legs forward and secure (breakaway technique) to rockguard with tape or cotton webbing. | **5.** Cluster and tie or tape (breakaway technique) all sling legs together to prevent entanglement during hookup and lift-off. |
| **6.** Cluster and tie or tape (breakaway technique) all sling legs together on top of the rockguard to prevent entanglement during hookup and lift-off. | |

*Figure 8-10. 613BS Scraper, Elevating*

## 8-12. 613WDS Water Distributor

**a. Applicability.** The following items in Table 8-11 are certified for all helicopters with suitable lift capacity by the US Army Natick Research, Development, and Engineering Center:

**Table 8-11. 613WDS Water Distributor**

| NOMENCLATURE | MAX WEIGHT (POUNDS) | SLING SET | LINK COUNT FRONT/REAR | RECOMMENDED AIRSPEED (KNOTS) |
|---|---|---|---|---|
| Distributor, Water, Work Section | 15,400 | 25K | 3/45 | 110 |
| Distributor, Water, Power Section | 16,960 | 25K | Listed in Rigging Steps | 110 |

**b. Materials.** The following materials are required to rig this load:

**(1)** Sling set (25,000-pound capacity).

**(2)** Tape, adhesive, pressure-sensitive, 2-inch wide roll.

**(3)** Cord, nylon, Type III, 550-pound breaking strength.

**(4)** Webbing, cotton, 1/4-inch, 80-pound breaking strength.

**(5)** Felt sheet, cattle hair, Type IV, 1/2-inch or suitable substitute.

**(6)** Plastic bags (4 each).

**(7)** Plywood, 3/4- x 8- x 46-inch (2 each).

**c. Personnel.** Four persons can sectionalize the distributor in 1 hour. Two persons can prepare and rig each load in 20 minutes.

**d. Procedures.** The following procedures apply to this load:

**(1) Preparation.** Prepare the load using the following steps:

**(a)** Sectionalize the distributor according to the instructions provided in the operator's manual.

**(b)** Secure the operator's seat with Type III nylon cord.

**(c)** Secure all covers and doors with tape or Type III nylon cord.

**(d)** Secure auxiliary fuel tank in place with Type III nylon cord.

**(e)** Secure the distribution control panel and cable in place on top of the tank with nylon cord.

**(f)** Ensure that the tank manhole cover is closed and secured.

**(g)** Close and secure the toolbox and hose stowage compartment covers with nylon cord.

**(h)** Secure the hose nozzle and reel with nylon cord.

**(i)** Tape all lights.

**(j)** Cover hitch pins and pin holes with plastic and tape to prevent contamination by dust and dirt.

**(k)** Ensure the steering wheels are aligned.

**(l)** Install front bumper lift provision. Ensure that pin safety clip is installed. If clip is missing, secure the pin in place with nylon cord.

**(m)** Fabricate a hood protection from two pieces of 3/4- x 8- x 46-inch plywood. Nail plywood together forming an L-shaped protector. Drill two 1/2-inch holes in each corner for restraint. Plywood will protect the top edge of

the radiator grill where it meets the hood.

**(n)** Place felt padding over the headlights and tape in place.

**(o)** Position the plywood protector on the hood and secure in place at four corners with nylon cord.

**(p)** Secure lift cylinders to the draft arms with a doubled length of nylon cord.

**CAUTION**
**Plywood hood protector is essential to prevent hood damage by sling leg chains.**

**(2) Rigging.** Rig the load according to the steps in Figure 8-11.

**(3) Hookup.** The hookup team stands on top of each section. The static wand person discharges the static electricity with the static wand. The hookup person places the apex fitting onto the aircraft cargo hook. The hookup team then moves clear of the load but remains close to the load as the helicopter removes slack from the sling legs. When successful hookup is assured, the hookup team quickly exits the area underneath the helicopter to the designated rendezvous point.

**(4) Derigging.** Derigging is the reverse of the preparation and rigging procedures in steps d (1) and d (2).

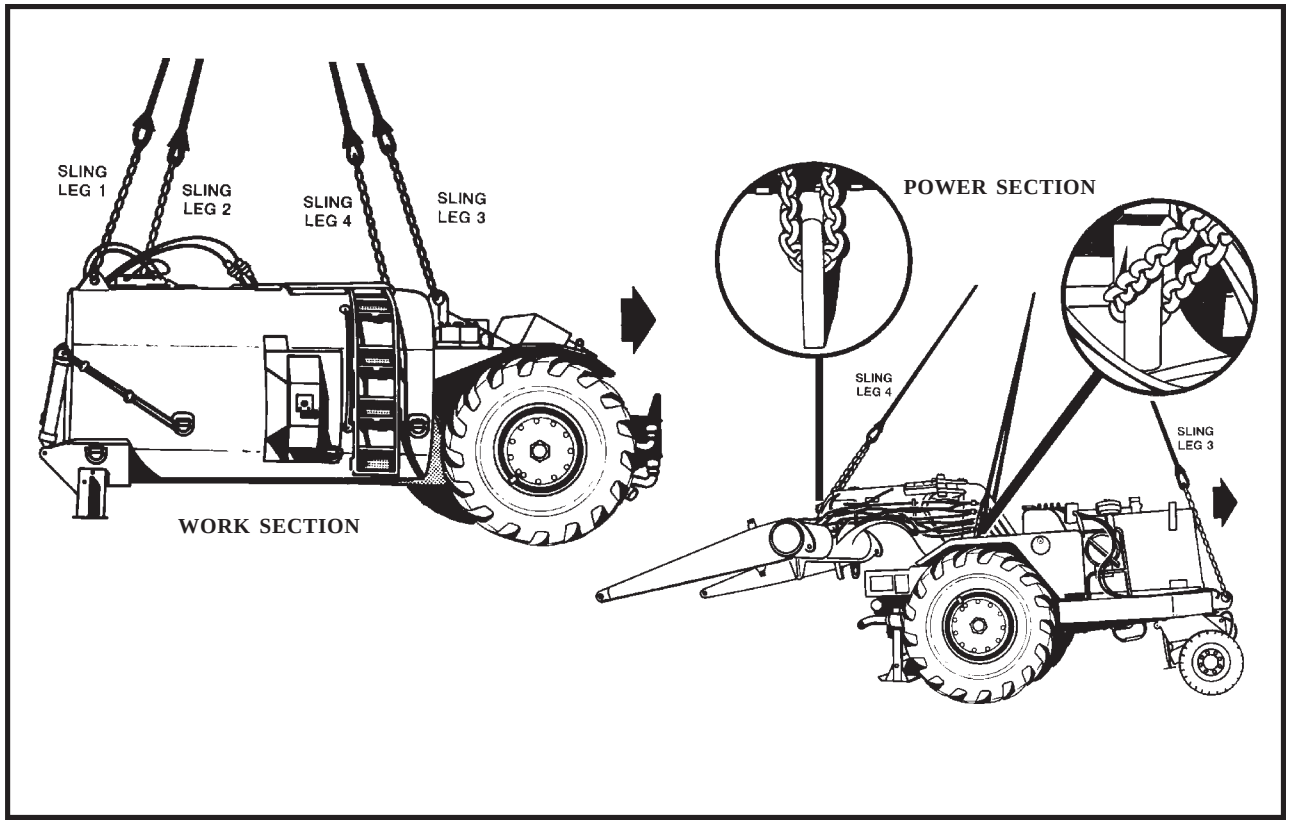


*Figure 8-11. 613WDS Water Distributor*

| RIGGING STEPS (WORK SECTION) | RIGGING STEPS (POWER SECTION) |
|---|---|
| **1.** Place the apex fitting on top of work section tank. Route outer sling legs 1 and 2 to the forward end of the water tank and inner sling legs 3 and 4 to the aft (wheel) end of the work section. Sling legs 1 and 3 must be to the same side of the water tank.<br><br>**2.** Pass chain end of sling leg 1 through the forward left lift provision located on left forward corner of the water tank. Place the correct link from Table 8-11 in the grab hook. Repeat this procedure for sling leg 2 on the lift provision on the right forward corner of the water tank.<br><br>**3.** Pass chain end of sling leg 3 through the aft left lift provision located on the aft deck by the left wheel. Place the correct link from Table 8-11 in the grab hook. Repeat this procedure for sling leg 4 on the lift provision by the right wheel. Secure excess chain with tape or nylon cord.<br><br>**4.** Cluster and tie or tape (breakaway technique) all sling legs together on top of the tank to prevent entanglement during hookup and lift-off. | **1.** Position apex fitting on top of the engine hood. Route outer sling legs 1 and 2 to the center of the power section by the main wheels. Route inner sling leg 3 forward to the front bumper and the other inner sling leg 4 to the arm assembly frame.<br><br>**2.** Loop the chain end of sling leg 1 through the left center lift provision to the left of the operator's seat and insert link 40 in the grab hook. Repeat with sling leg 2 on the right center lift provision.<br><br>**3.** Loop the chain end of sling leg 3 through the front bumper lift provision located in the center of the bumper and insert link 3 in the grab hook. Pull the sling leg up over the hood protector and tape or tie (breakaway technique) the sling leg to the ROPS mount.<br><br>**4.** Loop the chain end of sling leg 4 through the lift provision located on the center top of the draft arm assembly frame and insert link 24 in grab hook. Tape or tie (breakaway technique) the sling leg to the top of the draft arm. Secure excess chain with tape or nylon cord.<br><br>**5.** Cluster and tie or tape (breakaway technique) all sling legs together to prevent entanglement during hookup and lift-off. |

***Figure 8-11. 613WDS Water Distributor (continued)***

## 8-13. Roller, Towed, Vibrating

**a. Applicability.** The following item in Table 8-12 is certified for all helicopters with suitable lift capacity by the US Army Natick Research, Development, and Engineering Center:

**Table 8-12. Roller, Towed, Vibrating**

| NOMENCLATURE | MAX WEIGHT (POUNDS) | SLING SET | LINK COUNT FRONT/REAR | RECOMMENDED AIRSPEED (KNOTS) |
|---|---|---|---|---|
| Roller, Towed, Vibrating | 4,830 | 10K | 3/3 | 120 |

**b. Materials.** The following materials are required to rig this load:

**(1)** Sling set (10,000-pound capacity).

**(2)** Tape, adhesive, pressure-sensitive, 2-inch wide roll.

**(3)** Cord, nylon, Type III, 550-pound breaking strength.

**(4)** Webbing, cotton, 1/4-inch, 80-pound breaking strength.

**c. Personnel.** Two persons can prepare and rig each load in 10 minutes.

**d. Procedures.** The following procedures apply to this load:

**(1) Preparation.** Prepare the load using the following steps:

**(a)** Lift the tongue and position the support leg in its stowed or travel position and secure it with Type III nylon cord.

**(b)** Ensure the battery box cover, fuel cap, hoses, and all loose items are secured. Tape or tie any loose items as required.

**(2) Rigging.** Rig the load according to the steps in Figure 8-12.

**(3) Hookup.** The hookup team stands alongside the load. The static wand person discharges the static electricity with the static wand. The hookup person places the apex fitting onto the aircraft cargo hook. The hookup team then moves clear of the load but remains close to the load as the helicopter removes slack from the sling legs. When successful hookup is assured, the hookup team quickly exits the area underneath the helicopter to the designated rendezvous point.

**(4) Derigging.** Derigging is the reverse of the preparation and rigging procedures in steps d (1) and d (2).

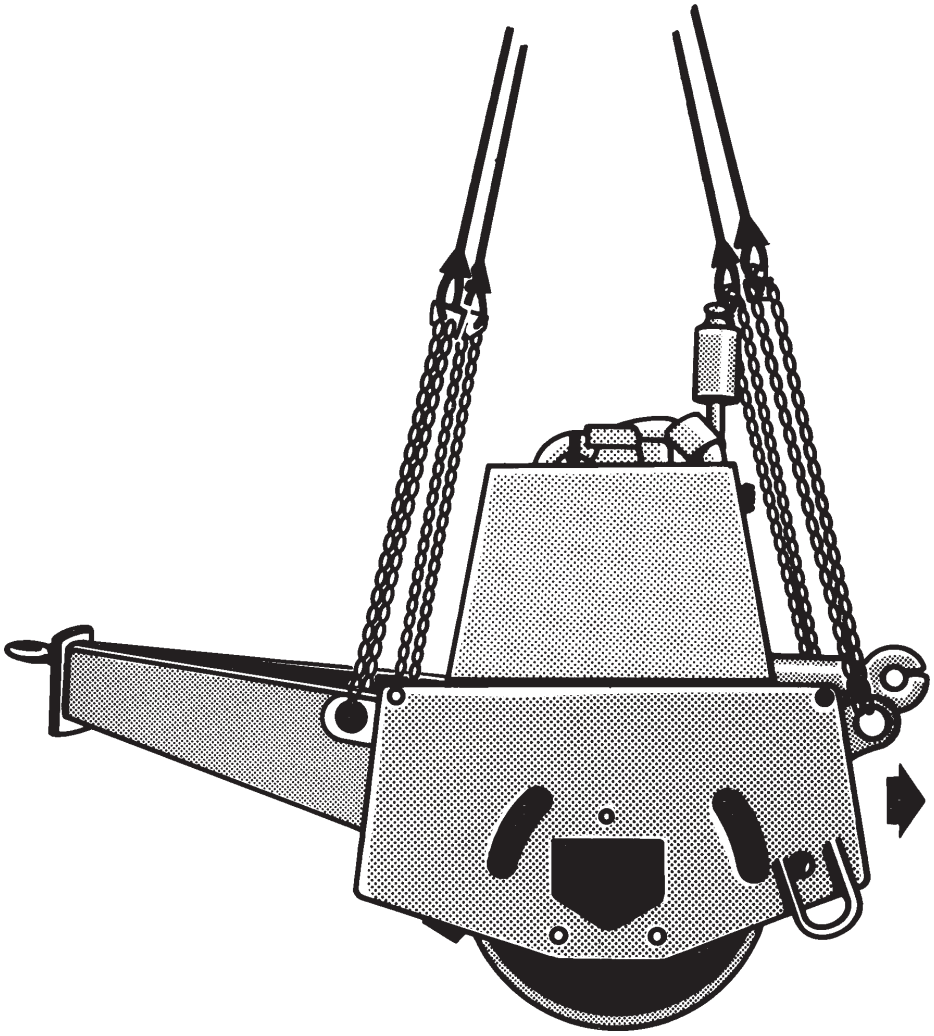

**RIGGING STEPS**

**1.** Position the apex fitting on top of the roller. Route outer sling legs 1and 2 to the front of the load (tongue end). Route inner sling legs 3 and 4 to the rear of the load. Sling legs 1 and 3 must be on the left side of the load.

**2.** Route the chain end of each sling leg through its respective lift provision. Place the correct link from Table 8-12 in the grab hook.

**3.** Cluster and tie or tape (breakaway technique) the sling legs together on top of the roller to prevent entanglement during hookup and lift-off.

*Figure 8-12. Roller, Towed, Vibrating*

## 8-14. Mk155 Launcher, Mine Clearing

**a. Applicability.** The following item in Table 8-13 is certified for all helicopters with suitable lift capacity by the US Army Natick Research, Development, and Engineering Center:

**Table 8-13. Mk155 Launcher, Mine Clearing**

| NOMENCLATURE | MAX WEIGHT (POUNDS) | SLING SET | LINK COUNT FRONT/REAR | RECOMMENDED AIRSPEED (KNOTS) |
|---|---|---|---|---|
| Mk155 Launcher, Mine Clearing | 860 | 10K | 3/3 | 80 |

**b. Materials.** The following materials are required to rig this load:

**(1)** Sling set (10,000-pound capacity).

**(2)** Tape, adhesive, pressure-sensitive, 2-inch wide roll.

**(3)** Cord, nylon, Type III, 550-pound breaking strength.

**(4)** Webbing, cotton, 1/4-inch, 80-pound breaking strength.

**c. Personnel.** Two persons can prepare and rig each load in 10 minutes.

**d. Procedures.** The following procedures apply to this load:

**(1) Preparation.** Prepare the load using the following steps:

**(a)** Ensure the launch rail is in the collapsed or storage mode and not in its vertical position.

**(b)** Ensure the storage box lid is closed and secured with Type III nylon cord or tape.

**(2) Rigging.** Rig the load according to the steps in Figure 8-13.

**(3) Hookup.** The hookup team stands alongside the launcher. The static wand person discharges the static electricity with the static wand. The hookup person places the apex fitting onto the aircraft cargo hook. The hookup team then moves clear of the load but remains close to the load as the helicopter removes slack from the sling legs. When successful hookup is assured, the hookup team quickly exits the area underneath the helicopter to the designated rendezvous point.

**(4) Derigging.** Derigging is the reverse of the preparation and rigging procedures in steps d (1) and d (2).

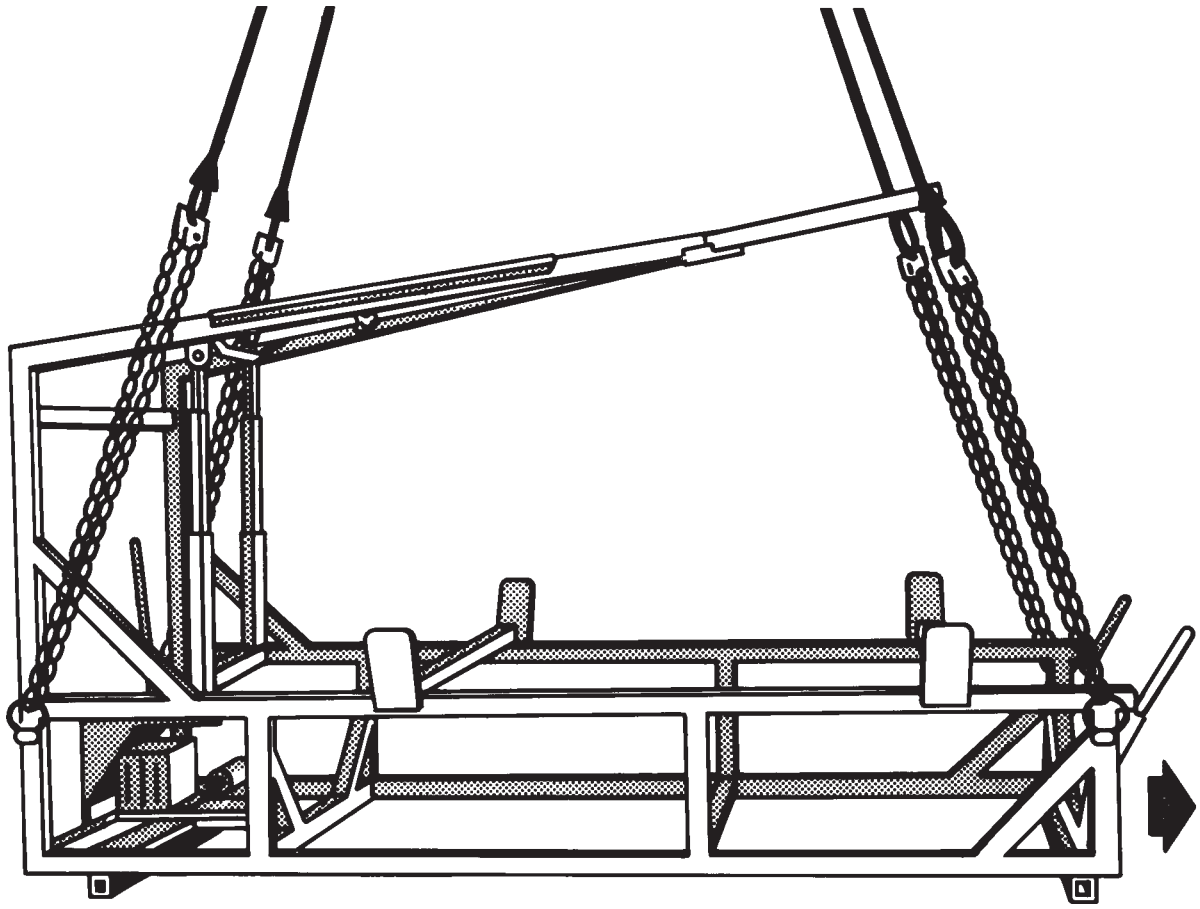

**RIGGING STEPS**

**1.** Position the apex fitting on top of the launch rail. Route outer sling legs 1 and 2 to the front of the load . Route inner sling legs 3 and 4 to the rear of the load. Sling legs 1 and 3 must be on the left side of the load.

**2.** Loop the chain end of sling leg 1 through the left front lift ring located behind the left rear corner of the storage box. Place the correct link from Table 8-13 in the grab hook. Repeat with sling leg 2 and the right front lift ring on the other side of the storage box.

**3.** Loop the chain end of sling leg 3 through the left rear lift ring. Place the correct link from Table 8-13 in the grab hook. Repeat with sling leg 4 and the right rear lift ring.

**4.** Cluster and tie or tape (breakaway technique) the sling legs together on top of the launch rail to prevent entanglement during hookup and lift-off.

*Figure 8-13. Mk155 Launcher, Mine Clearing*

## 8-15. M68A2 Line Charge, Demolition with or without Mk22 Rocket Motor

**a. Applicability.** The following items in Table 8-14 are certified for all helicopters with suitable lift capacity by the US Army Natick Research, Development, and Engineering Center:

**Table 8-14. M68A2 Line Charge, Demolition**

| NOMENCLATURE | MAX WEIGHT (POUNDS) | SLING SET | LINK COUNT FRONT/REAR | RECOMMENDED AIRSPEED (KNOTS) |
|---|---|---|---|---|
| M68A2 Line Charge, Demolition, Inert | 2,486 | 10K | 3/3 | 70 |
| M68A2 Line Charge, Demolition with Mk22 Rocket Motor | 2,672 | 10K | 3/3 | 70 |

**b. Materials.** The following materials are required to rig this load:

**(1)** Sling set (10,000-pound capacity).

**(2)** Tape, adhesive, pressure-sensitive, 2-inch wide roll.

**(3)** Cord, nylon, Type III, 550-pound breaking strength.

**(4)** Webbing, cotton, 1/4-inch, 80-pound breaking strength.

**(5)** Tie-down strap, CGU-1B (4 each).

**c. Personnel.** Two persons can prepare and rig each load in 20 minutes.

**d. Procedures.** The following procedures apply to this load:

**(1) Preparation.** Prepare the load using the following steps:

**(a)** Ensure the end of the load opposite the electrical connectors and fuse storage area is designated as the front of the load.

**(b)** Ensure the storage box lid is closed and secured with Type III nylon cord or tape.

**(c)** Ensure the rocket motor box is secured with metal strapping.

**(d)** Center the rocket motor box on top of the line charge container.

**(e)** Connect two CGU-1/B tie-down straps together to form one long strap. Route the strap around the line charge and rocket motor box lengthwise. Tighten the strap securely.

**(f)** Route two CGU-1/B tie-down straps across the rocket motor box and underneath the line charge container. Position the strap at each end of the containers approximately equal distance from the center. Tighten the strap securely. Secure the excess tie-down strap with tape or Type III nylon cord.

**NOTE: When rigging the line charge without the rocket motor omit steps d (1) (c) through (f).**

**(2) Rigging.** Rig the load according to the steps in Figure 8-14.

**(3) Hookup.** The hookup team stands alongside the line charge. The static wand person discharges the static electricity with the static wand. The hookup person places the apex fitting onto the aircraft cargo hook. The hookup team then moves clear of the load but remains close to the load as the helicopter removes slack from the sling legs. When successful hookup is assured, the hookup team quickly exits the area underneath the helicopter to the designated rendezvous point.

**(4) Derigging.** Derigging is the reverse of the preparation and rigging procedures in steps d (1) and d (2).

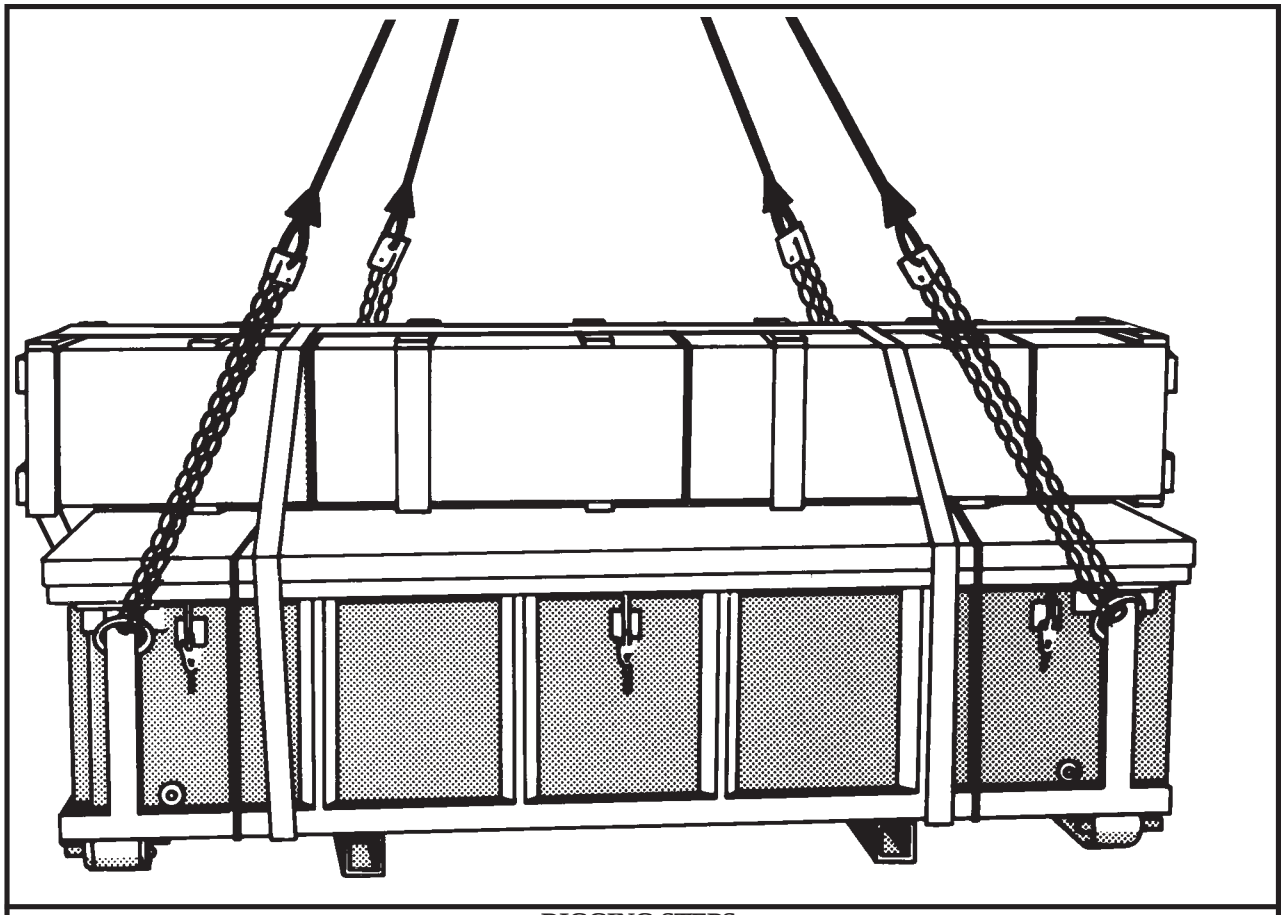

**RIGGING STEPS**

**1.** Position the apex fitting on top of the container. Route outer sling legs 1 and 2 to the front of the load . Route inner sling legs 3 and 4 to the rear of the load. Sling legs 1 and 3 must be on the left side of the load.

**2.** Loop the chain end of sling leg 1 through the left front lift ring. Place the correct link from Table 8-14 in the grab hook. Repeat with sling leg 2 and the right front lift ring.

**3.** Loop the chain end of sling leg 3 through the left rear lift ring. Place the correct link from Table 8-14 in the grab hook. Repeat with sling leg 4 and the right rear lift ring.

**4.** Cluster and tie or tape (breakaway technique) the sling legs together on top of the launch rail to prevent entanglement during hookup and lift-off.

***Figure 8-14. M68A2 Line Charge, Demolition***

## 8-16. Mk155 Launcher with or without M68A2 Demolition Line Charge and Mk22 Rocket Motor on M353 Trailer

**a. Applicability.** The following items in Table 8-15 are certified for all helicopters with suitable lift capacity by the US Army Natick Research, Development, and Engineering Center:

**Table 8-15. Mk155 Launcher on M353 Trailer**

| NOMENCLATURE | MAX WEIGHT (POUNDS) | SLING SET | LINK COUNT FRONT/REAR | RECOMMENDED AIRSPEED (KNOTS) |
|---|---|---|---|---|
| Mk155 Launcher | 3,700 | 10K | 3/3 | 90 |
| Mk155 Launcher with M68A2 Demolition Charge and Mk22 Rocket Motor | 6,312 | 10K | 3/3 | 100 |

**b. Materials.** The following materials are required to rig this load:

**(1)** Sling set (10,000-pound capacity).

**(2)** Tape, adhesive, pressure-sensitive, 2-inch wide roll.

**(3)** Cord, nylon, Type III, 550-pound breaking strength.

**(4)** Webbing, cotton, 1/4-inch, 80-pound breaking strength.

**(5)** Tie-down strap, CGU-1B (4 each).

**c. Personnel.** Two persons can prepare and rig each load in 20 minutes.

**d. Procedures.** The following procedures apply to this load:

**(1) Preparation.** Prepare the load using the following steps:

**(a)** Ensure the launcher is securely attached to the trailer chassis. Ensure the launch rail is in the collapsed or storage mode and not in its vertical position.

**(b)** Ensure the storage box lid is closed and secured with Type III nylon cord or tape (if installed).

**(c)** Tie off hoses and safety chains and secure any loose items with nylon cord or tape.

**(d)** Set the parking brake.

**(e)** Place and secure the Mk22 rocket motor box inside the aircraft using the CGU-1/B tie-down straps (if required).

**(2) Rigging.** Rig the load according to the steps in Figure 8-15.

**(3) Hookup.** The hookup team stands on the trailer chassis. The static wand person discharges the static electricity with the static wand. The hookup person places the apex fitting onto the aircraft cargo hook. The hookup team then moves clear of the load but remains close to the load as the helicopter removes slack from the sling legs. When successful hookup is assured, the hookup team quickly exits the area underneath the helicopter to the designated rendezvous point.

**(4) Derigging.** Derigging is the reverse of the preparation and rigging procedures in steps d (1) and d (2).

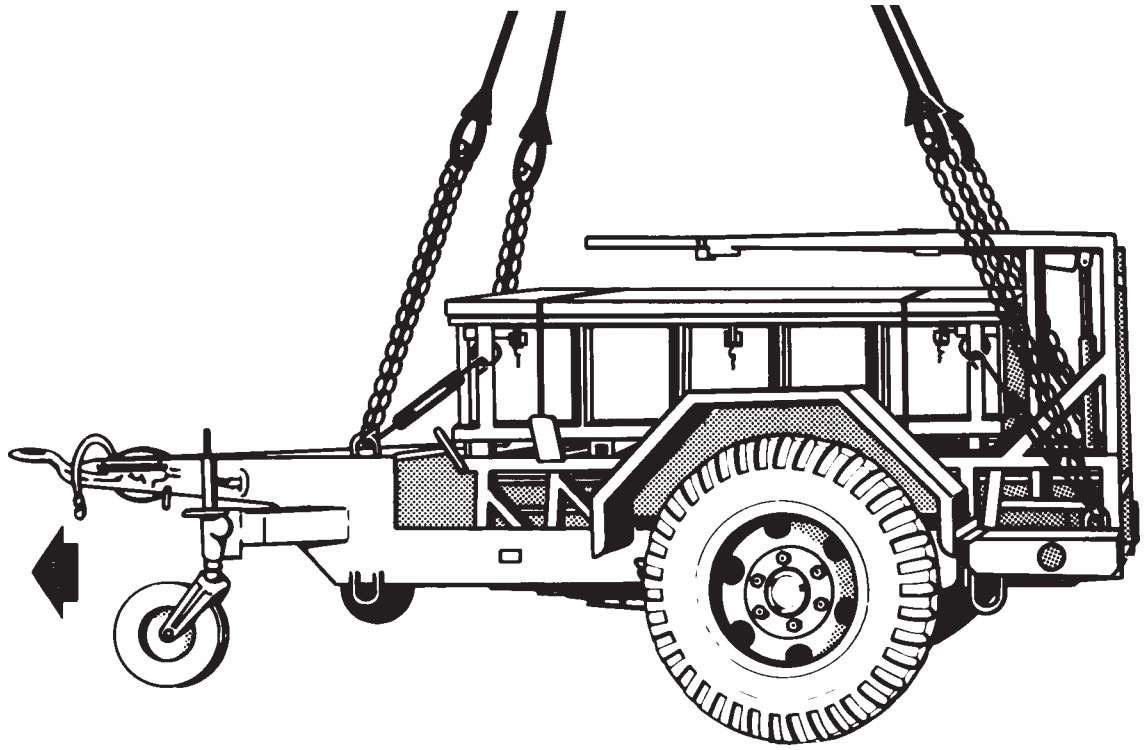

**RIGGING STEPS**

**1.** Position apex fitting on top of the launcher. Route outer sling legs 1 and 2 to the front of the trailer and the inner sling legs 3 and 4 to the rear. Sling legs 1 and 3 should be to the left side of the load.

**2.** Loop the chain end of sling leg 1 through the left front lift provision on the trailer chassis located aft of the left leveling wheel assembly. Place the correct link from Table 8-15 in the grab hook. Repeat with sling leg 2 and the right front lift provision.

**3.** Loop the chain end of sling leg 3 through the left rear lift provision on the trailer chassis located aft of the trailer left wheel. Place the correct link from Table 8-15 in the grab hook. Repeat with sling leg 4 and the right rear lift provision.

**4.** Raise the apex fitting above the launcher and tie or tape sling legs to the launch rail to prevent entanglement during hookup.

**5.** Cluster and tie or tape (breakaway technique) all sling legs above the launch rail to prevent entanglement during hookup and lift-off.

*Figure 8-15. Mk155 Launcher on M353 Trailer*

## 8-17. Mk155 Launcher with or without M68A2 Demolition Line Charge and Mk22 Rocket Motor on M200A1 or Mobile-Trac System (MTS) Trailer

**a. Applicability.** The following items in Table 8-16 are certified for all helicopters with suitable lift capacity by the US Army Natick Research, Development, and Engineering Center:

**Table 8-16. Mk155 Launcher on M200A1 or MTS Trailer**

| NOMENCLATURE | MAX WEIGHT (POUNDS) | SLING SET | LINK COUNT FRONT/REAR | RECOMMENDED AIRSPEED (KNOTS) |
|---|---|---|---|---|
| Mk155 Launcher on M200A1 Trailer | 3,330 | 10K | 3/3 | 90 |
| Mk155 Launcher, M68A2 Demolition Charge, and Mk22 Rocker Motor on M200A1 Trailer | 5,620 | 10K | 10/3 | 110 |
| Mk155 Launcher, M68A2 Demolition Charge, and Mk22 Rocker Motor on the Mobile-Trac System Trailer (MTS) | 7,172 | 10K | 10/3 | 110 |

**b. Materials.** The following materials are required to rig this load:

**(1)** Sling set (10,000-pound capacity).

**(2)** Tape, adhesive, pressure-sensitive, 2-inch wide roll.

**(3)** Cord, nylon, Type III, 550-pound breaking strength.

**(4)** Webbing, cotton, 1/4-inch, 80-pound breaking strength.

**(5)** Tie-down strap, CGU-1B (4 each).

**c. Personnel.** Two persons can prepare and rig each load in 20 minutes.

**d. Procedures.** The following procedures apply to this load:

**(1) Preparation.** Prepare the load using the following steps:

**(a)** Ensure the launcher is securely attached to the trailer chassis. Ensure the launch rail is in the collapsed or storage mode and not in its vertical position.

**(b)** Ensure the storage box lid is closed and secured with Type III nylon cord or tape (if installed).

**(c)** Tie off hoses and safety chains and secure any loose items with nylon cord or tape.

**(d)** Set the parking brake.

**(e)** Place and secure the Mk22 rocket motor box inside the aircraft using the CGU-1/B tie-down straps (if required).

**(2) Rigging.** Rig the load according to the steps in Figure 8-16.

**(3) Hookup.** The hookup team stands on the trailer chassis or on the charge. The static wand person discharges the static electricity with the static wand. The hookup person places the apex fitting onto the aircraft cargo hook. The hookup team then moves clear of the load but remains close to the load as the helicopter removes slack from the sling legs. When successful hookup is assured, the hookup team quickly exits the area underneath the helicopter to the designated rendezvous point.

**(4) Derigging.** Derigging is the reverse of the preparation and rigging procedures in steps d (1) and d (2).

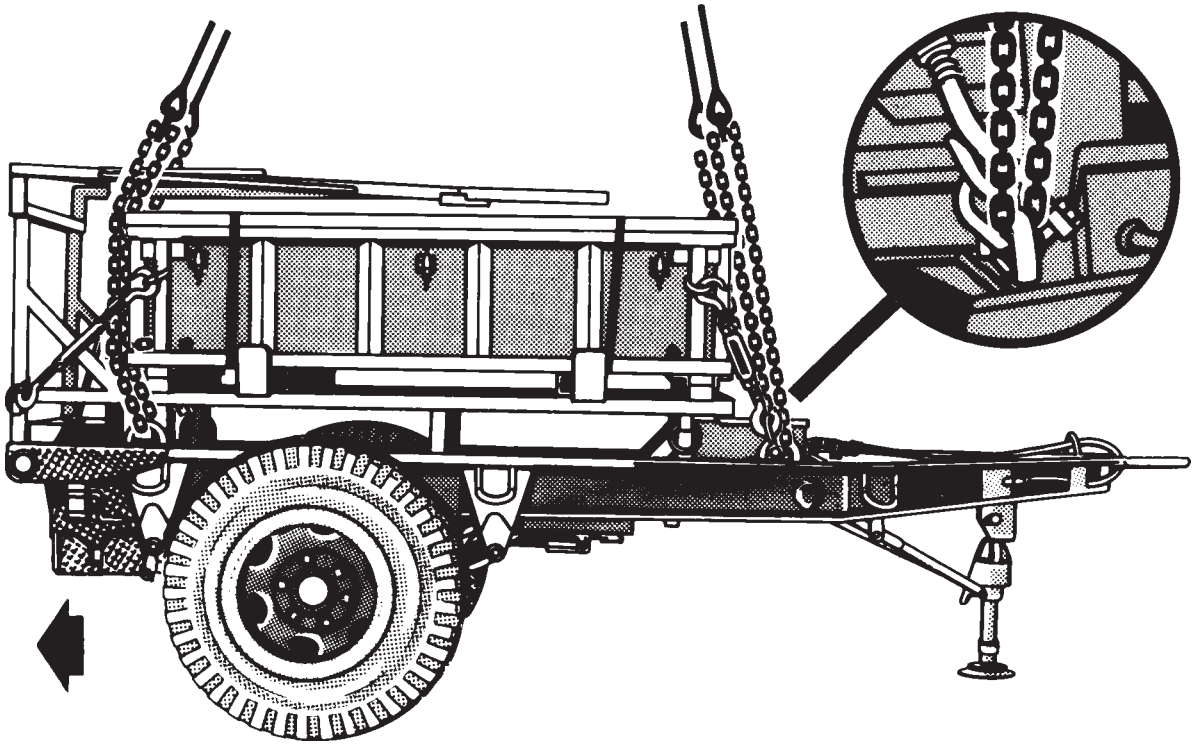

**RIGGING STEPS**

**1.** Position apex fitting on top of the launcher. Route outer sling legs 1 and 2 to the front of the trailer and the inner sling legs 3 and 4 to the rear. Sling legs 1 and 3 should be to the left side of the load.

**2.** Loop the chain end of sling leg 1 through the left front lift provision on the trailer chassis located aft of the lunette. Place the correct link from Table 8-16 in the grab hook. Repeat with sling leg 2 and the right front lift provision.

**3.** Loop the chain end of sling leg 3 through the left rear lift provision on the trailer chassis located aft of the demolition charge container. Place the correct link from Table 8-16 in the grab hook. Repeat with sling leg 4 and the right rear lift provision.

**4.** Raise the apex fitting above the launcher and tie or tape sling legs to the launch rail to prevent entanglement during hookup.

**5.** Cluster and tie or tape (breakaway technique) all sling legs above the launch rail to prevent entanglement during hookup and lift-off.

*Figure 8-16. Mk155 Launcher on M200A1 or MTS Trailer*

## 8-18. LRT-110, 7 1/2-Ton Crane

**a. Applicability.** The following item in Table 8-17 is certified for all helicopters with suitable lift capacity by the US Army Natick Research, Development, and Engineering Center:

**Table 8-17. LRT-110, 7 1/2-Ton Crane**

| NOMENCLATURE | MAX WEIGHT (POUNDS) | SLING SET | LINK COUNT FRONT/REAR | RECOMMENDED AIRSPEED (KNOTS) |
|---|---|---|---|---|
| LRT-110 Crane | 24,230 | 25K | 3/3 | 120 |

**b. Materials.** The following materials are required to rig this load:

**(1)** Sling set (25,000-pound capacity).

**(2)** Tape, adhesive, pressure-sensitive, 2-inch wide roll.

**(3)** Cord, nylon, Type III, 550-pound breaking strength.

**(4)** Webbing, cotton, 1/4-inch, 80-pound breaking strength.

**(5)** Tie-down strap, CGU-1B (4 each).

**(6)** Webbing, tubular, nylon, 1/2-inch.

**(7)** Felt sheet, cattle hair, Type IV, 1/2-inch or suitable substitute.

**c. Personnel.** Two persons can prepare and rig each load in 20 minutes.

**d. Procedures.** The following procedures apply to this load:

**(1) Preparation.** Prepare the load using the following steps:

**(a)** Fold side mirrors in toward cab and tie or tape, as necessary. Tape or secure windshield wipers to windshield.

**(b)** Ensure the wheels are pointing straight ahead. Secure the steering wheel with nylon cord or tape.

**(c)** Secure doors, tool box covers, and all loose equipment with nylon cord or tape. Secure hook-block assembly to the end of the boom mast with CGU-l/B cargo tie-down or equivalent.

**(d)** Secure boom light power cable with nylon cord or tape.

**(e)** Insert wooden cable wedges at the drum to prevent the cable from unspooling if the cable becomes slack. Secure wedges with 1/2-inch tubular nylon.

**(f)** Set the parking brake.

**(2) Rigging.** Rig the load according to the steps in Figure 8-17.

**(3) Hookup.** The hookup team stands beside the left and right side of the boom base. The static wand person discharges the static electricity with the static wand. The hookup person places the apex fitting onto the aircraft cargo hook. The hookup team then moves clear of the load but remains close to the load as the helicopter removes slack from the sling legs. When successful hookup is assured, the hookup team quickly exits the area underneath the helicopter to the designated rendezvous point.

**(4) Derigging.** Derigging is the reverse of the preparation and rigging procedures in steps d (1) and d (2).

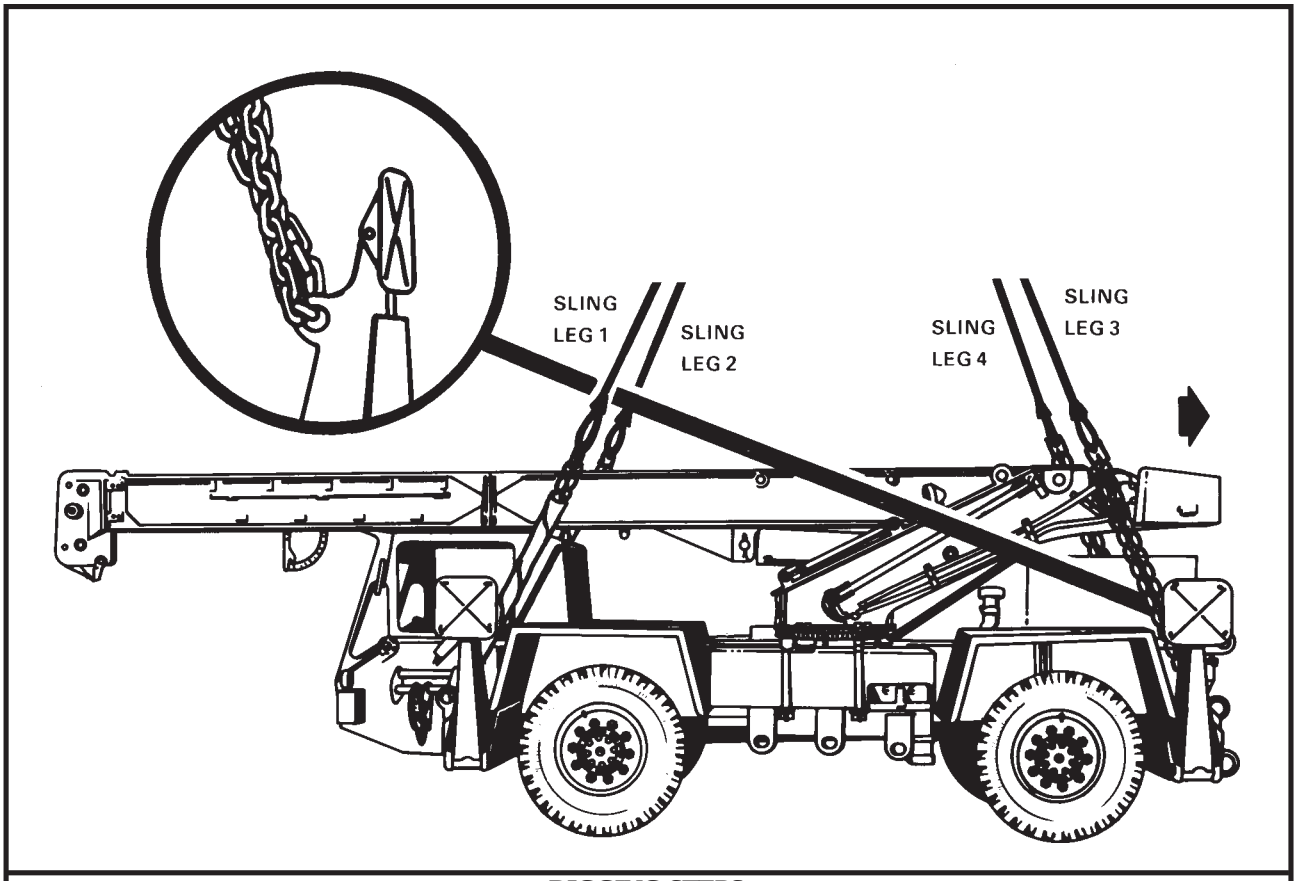


**RIGGING STEPS**

**1.** Position apex fitting on top of the boom directly above the boom base. Route outer sling legs 1 and 2 to the front (cab end) of the crane and the inner sling legs 3 and 4 to the rear. Sling legs 1 and 3 must be on the left (driver's) side of the load.

**2.** Loop the chain end of sling leg 1 through the lift provision located on the inboard side of the front left outrigger. Place the correct link from Table 8-17 in the grab hook. Repeat with sling leg 2 on the right front outrigger.

**3.** Loop the chain end of sling leg 3 through the lift provision located on the inboard side of the left rear outrigger. Place the correct link from Table 8-17 in the grab hook. Repeat with sling leg 4 on the right rear outrigger.

**4.** Pad the sling legs where they contact the crane cab.

**5.** Cluster and tie or tape (breakaway technique) all sling legs together to prevent entanglement during hookup and lift-off.

*Figure 8-17. LRT-110, 7 1/2-Ton Crane*

## 8-19. LRT-110, 7 1/2-Ton Crane (Boom)

**a. Applicability.** The following item in Table 8-18 is certified for all helicopters with suitable lift capacity by the US Army Natick Research, Development, and Engineering Center:

**Table 8-18. LRT-110, 7 1/2-Ton Crane (Boom)**

| NOMENCLATURE | MAX WEIGHT (POUNDS) | SLING SET | LINK COUNT FRONT/REAR | RECOMMENDED AIRSPEED (KNOTS) |
|---|---|---|---|---|
| LRT-110 Crane (Boom) | 8,600 | 10K | 3/3 | 140 |

**b. Materials.** The following materials are required to rig this load:

**(1)** Sling set (10,000-pound capacity).

**(2)** Tape, adhesive, pressure-sensitive, 2-inch wide roll.

**(3)** Cord, nylon, Type III, 550-pound breaking strength.

**(4)** Webbing, cotton, 1/4-inch, 80-pound breaking strength.

**(5)** Tie-down strap, CGU-1B (4 each).

**(6)** Webbing, tubular, nylon, 1/2-inch.

**c. Personnel.** Two persons can prepare and rig each load in 20 minutes.

**d. Procedures.** The following procedures apply to this load:

**(1) Preparation.** Prepare the load using the following steps:

**(a)** Sectionalize the crane according to instructions in the operator's manual.

**(b)** Secure hook-block assembly to the end of the boom mast with CGU-l/B cargo tie-down or equivalent.

**(c)** Secure boom light power cable with nylon cord or tape.

**(d)** Insert wooden cable wedges at the drum to prevent the cable from unspooling if the cable becomes slack. Secure wedges with 1/2-inch tubular nylon.

**(e)** Secure the boom hydraulic hoses with tape or nylon cord. Make sure the hoses are clear of the boom base.

**(2) Rigging.** Rig the load according to the steps in Figure 8-18.

**(3) Hookup.** The hookup team stands beside the boom. The static wand person discharges the static electricity with the static wand. The hookup person places the apex fitting onto the aircraft cargo hook. The hookup team then moves clear of the load but remains close to the load as the helicopter removes slack from the sling legs. When successful hookup is assured, the hookup team quickly exits the area underneath the helicopter to the designated rendezvous point.

**(4) Derigging.** Derigging is the reverse of the preparation and rigging procedures in steps d (1) and d (2).

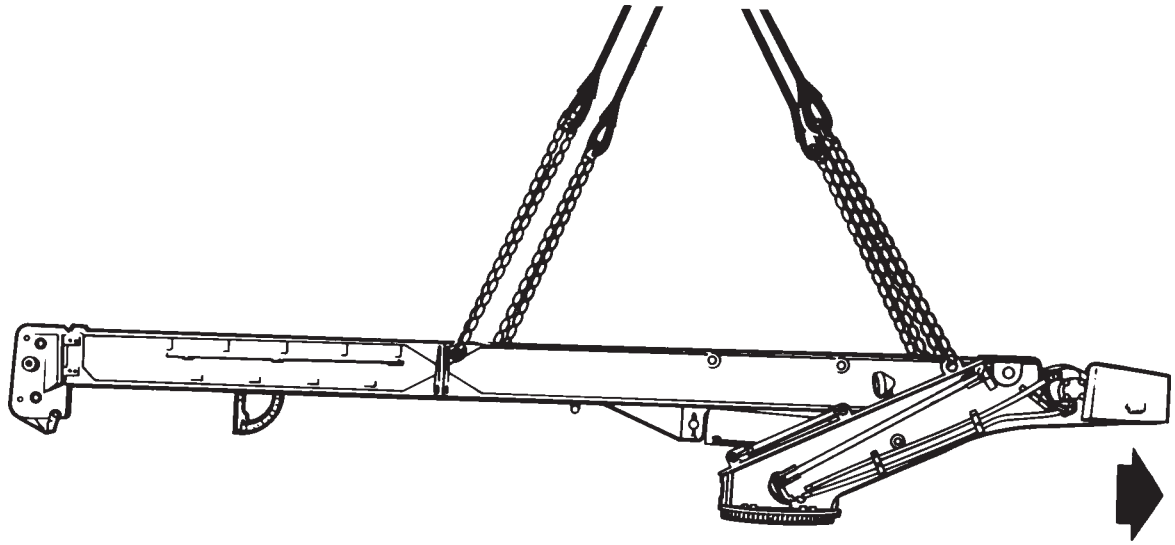

**RIGGING STEPS**

**1.** Position apex fitting on top of the boom directly above the boom base. Route outer sling legs 1 and 2 to the front (counterweight) end and inner sling legs 3 and 4 to the rear (hook) end. Sling legs 1 and 3 must be on the left side of the boom.

**2.** Loop the chain end of sling leg 1 through the lift provision located on top of the boom left support arm near the counterweight end. Place the correct link from Table 8-18 in the grab hook. Repeat with sling leg 2 on the right side support arm.

**3.** Loop the chain end of sling leg 3 through the lift provision located on the left side near the middle of the boom. Place the correct link from Table 8-18 in the grab hook. Repeat with sling leg 4 on the right side.

**4.** Cluster and tie or tape (breakaway technique) all sling legs together to prevent entanglement during hookup and lift-off.

***Figure 8-18. LRT-110, 7 1/2-Ton Crane (Boom)***

## 8-20. LRT-110, 7 1/2-Ton Crane (Power Unit)

**a. Applicability.** The following item in Table 8-19 is certified for all helicopters with suitable lift capacity by the US Army Natick Research, Development, and Engineering Center:

**Table 8-19. LRT-110, 7 1/2-Ton Crane (Power Unit)**

| NOMENCLATURE | MAX WEIGHT (POUNDS) | SLING SET | LINK COUNT FRONT/REAR | RECOMMENDED AIRSPEED (KNOTS) |
|---|---|---|---|---|
| LRT-110 Crane (Power Unit) | 15,600 | 25K | 3/3 | 140 |

**b. Materials.** The following materials are required to rig this load:

**(1)** Sling set (25,000-pound capacity).

**(2)** Tape, adhesive, pressure-sensitive, 2-inch wide roll.

**(3)** Cord, nylon, Type III, 550-pound breaking strength.

**(4)** Webbing, cotton, 1/4-inch, 80-pound breaking strength.

**(5)** Tie-down strap, CGU-1B (4 each).

**(6)** Webbing, tubular, nylon, 1/2-inch.

**(7)** Felt sheet, cattle hair, Type IV, 1/2-inch or suitable substitute.

**c. Personnel.** Two persons can prepare and rig each load in 20 minutes.

**d. Procedures.** The following procedures apply to this load:

**(1) Preparation.** Prepare the load using the following steps:

**(a)** Sectionalize the crane according to instructions in the operator's manual.

**(b)** Fold side mirrors in toward cab and tie or tape, as necessary. Tape or secure windshield wipers to windshield.

**(c)** Ensure the wheels are pointing straight ahead. Secure the steering wheel with nylon cord or tape. Engage the parking brake.

**(d)** Secure doors, tool box covers, and all loose equipment with nylon cord or tape.

**(2) Rigging.** Rig the load according to the steps in Figure 8-19.

**(3) Hookup.** The hookup team stands beside the left and right side of the boom base. The static wand person discharges the static electricity with the static wand. The hookup person places the apex fitting onto the aircraft cargo hook. The hookup team then moves clear of the load but remains close to the load as the helicopter removes slack from the sling legs. When successful hookup is assured, the hookup team quickly exits the area underneath the helicopter to the designated rendezvous point.

**(4) Derigging.** Derigging is the reverse of the preparation and rigging procedures in steps d (1) and d (2).

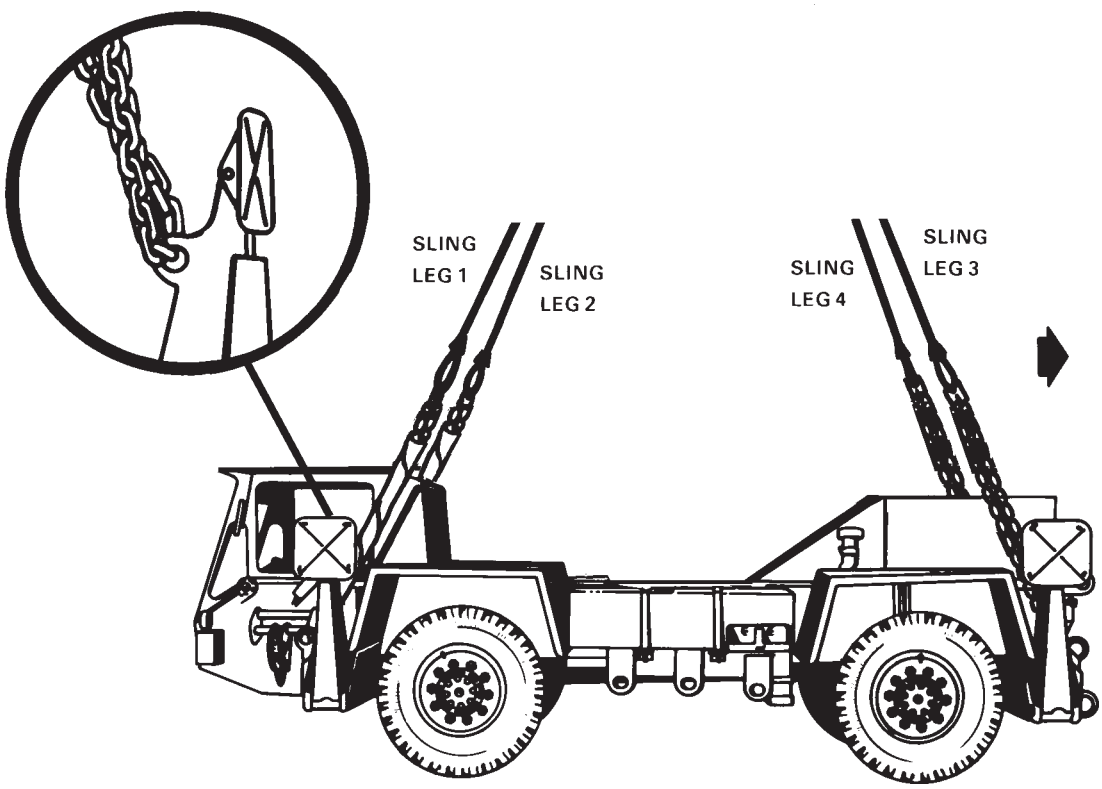


**RIGGING STEPS**

**1.** Position apex fitting on top of the boom base attaching point. Route outer sling legs 1 and 2 to the front (cab end) of the crane and the inner sling legs 3 and 4 to the rear. Sling legs 1 and 3 must be on the left (driver's) side of the load.

**2.** Loop the chain end of sling leg 1 through the lift provision located on the inboard side of the front left outrigger. Place the correct link from Table 8-19 in the grab hook. Repeat with sling leg 2 on the right front outrigger.

**3.** Loop the chain end of sling leg 3 through the lift provision located on the inboard side of the left rear outrigger. Place the correct link from Table 8-19 in the grab hook. Repeat with sling leg 4 on the right rear outrigger.

**4.** Pad the sling legs where they contact the crane cab.

**5.** Cluster and tie or tape (breakaway technique) all sling legs together to prevent entanglement during hookup and lift-off.

*Figure 8-19. LRT-110, 7 1/2-Ton Crane (Power Unit)*

## 8-21. Truck, Forklift, MC-4000

**a. Applicability.** The following item in Table 8-20 is certified for all helicopters with suitable lift capacity by the US Army Natick Research, Development, and Engineering Center:

**Table 8-20. Truck, Forklift, MC-4000**

| NOMENCLATURE | MAX WEIGHT (POUNDS) | SLING SET | LINK COUNT FRONT/REAR | RECOMMENDED AIRSPEED (KNOTS) |
|---|---|---|---|---|
| Truck, Forklift, Rough Terrain, MC-4000, TAMCN B2565 | 8,600 | 15K | 4/10 | 90 |

**b. Materials.** The following materials are required to rig this load:

**(1)** Sling set (15,000-pound capacity).

**(2)** Tape, adhesive, pressure-sensitive, 2-inch wide roll.

**(3)** Cord, nylon, Type III, 550-pound breaking strength.

**(4)** Webbing, cotton, 1/4-inch, 80-pound breaking strength.

**c. Personnel.** Two persons can prepare and rig each load in 20 minutes.

**d. Procedures.** The following procedures apply to this load:

**(1) Preparation.** Prepare the load using the following steps:

**(a)** Insert the articulating lock pin to keep the front and rear sections from twisting while in flight.

**(b)** Secure the seat cushion and steering wheel with Type III nylon cord. Engage the hand brake and place the transmission in neutral.

**(c)** Ensure the fuel tank is less than 3/4 full.

**(d)** Raise the fork tines 1 foot above the ground.

**(2) Rigging.** Rig the load according to the steps in Figure 8-20.

**(3) Hookup.** The hookup team stands on top of the engine deck. The static wand person discharges the static electricity with the static wand. The hookup person places the apex fitting onto the aircraft cargo hook. The hookup team then moves clear of the load but remains close to the load as the helicopter removes slack from the sling legs. When successful hookup is assured, the hookup team quickly exits the area underneath the helicopter to the designated rendezvous point.

**(4) Derigging.** Derigging is the reverse of the preparation and rigging procedures in steps d (1) and d (2).

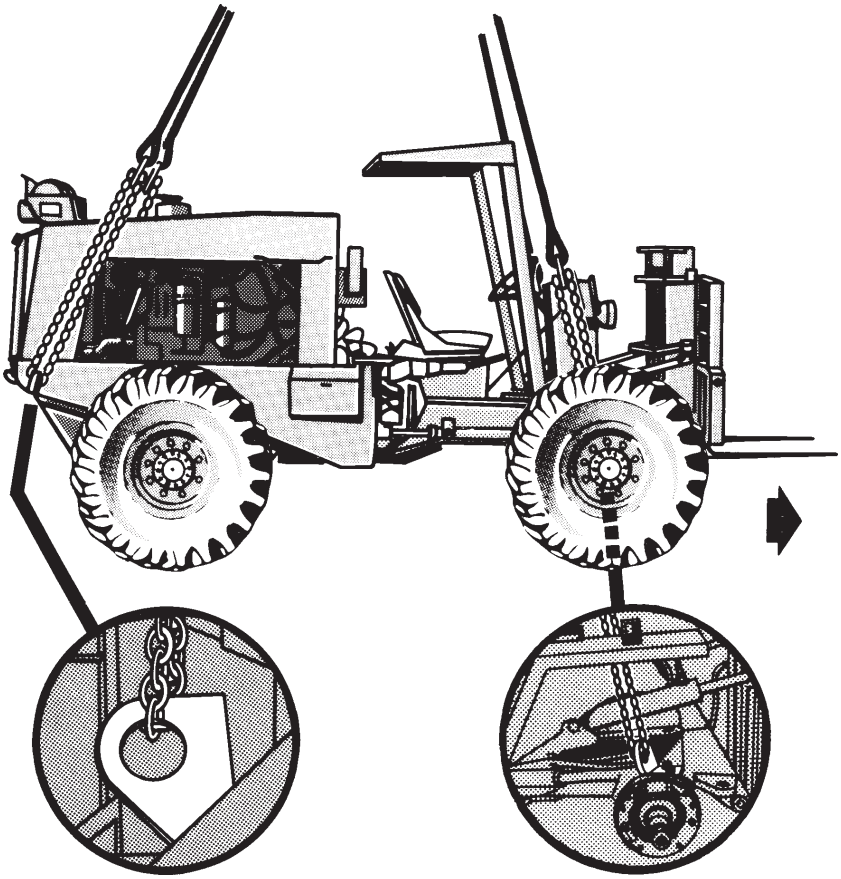

**RIGGING STEPS**

**1.** Position apex fitting/web ring on top of the engine hood or ROPS. Route outer sling legs 1 and 2 to the front of the forklift and inner sling legs 3 and 4 to the rear of the engine area. Sling legs 1 and 3 must be on the left side of the load.

**2.** Loop the chain end of sling leg 1 through the left front lift provision (not the tie-down provision) that is located directly above the forward axle housing between the left front tire and the hydraulic cylinder. Place the correct link from Table 8-20 in the grab hook. Repeat with sling leg 2 on the right front lift provision.

**3.** Loop the chain end of sling leg 3 through the left rear lift provision. Place the correct link from Table 8-20 in the grab hook. Repeat with sling leg 4 and the right rear lift provision.

**4.** Pull the front sling legs up and tape or tie (breakaway technique) the grab links to the front side of the upper light brackets to ensure the sling legs do not become entangled.

**5.** Pull the aft sling legs together on top of the engine compartment and tie or tape (breakaway technique) the two grab links together.

**6.** Cluster and tie or tape (breakaway technique) all sling legs together on top of the forklift to prevent entanglement during hookup and lift-off.

*Figure 8-20. Truck, Forklift, MC-4000*

## 8-22. Truck, Forklift, RT4000

**a. Applicability.** The following item in Table 8-21 is certified for all helicopters with suitable lift capacity by the US Army Natick Research, Development, and Engineering Center:

**Table 8-21. Truck, Forklift, RT4000**

| NOMENCLATURE | MAX WEIGHT (POUNDS) | SLING SET | LINK COUNT FRONT/REAR | RECOMMENDED AIRSPEED (KNOTS) |
|---|---|---|---|---|
| Truck, Forklift, Rough Terrain, 4000-pound capacity, TAMCN B2566 | 10,860 | 15K | 3/10 | 120 |

**b. Materials.** The following materials are required to rig this load:

**(1)** Sling set (15,000-pound capacity).

**(2)** Tape, adhesive, pressure-sensitive, 2-inch wide roll.

**(3)** Cord, nylon, Type III, 550-pound breaking strength.

**(4)** Webbing, cotton, 1/4-inch, 80-pound breaking strength.

**(5)** Tie-down strap, CGU-1B (4 each).

**c. Personnel.** Two persons can prepare and rig each load in 10 minutes.

**d. Procedures.** The following procedures apply to this load:

**(1) Preparation.** Prepare the load using the following steps:

**(a)** Secure the seat cushion and steering wheel with Type III nylon cord. Engage the hand brake and place the transmission in neutral.

**(b)** Ensure the fuel tank is less than 3/4 full.

**(c)** Raise the fork tines 1 foot above the ground. Lift the fork ends upward and secure to the lift cylinder frame using the CGU-1B straps.

**(d)** Tape the end of the exhaust pipe.

**(2) Rigging.** Rig the load according to the steps in Figure 8-21.

**(3) Hookup.** The hookup team stands on top of the falling objects protection system (FOPS). The static wand person discharges the static electricity with the static wand. The hookup person places the apex fitting onto the aircraft cargo hook. The hookup team then moves clear of the load but remains close to the load as the helicopter removes slack from the sling legs. When successful hookup is assured, the hookup team quickly exits the area underneath the helicopter to the designated rendezvous point.

**(4) Derigging.** Derigging is the reverse of the preparation and rigging procedures in steps d (1) and d (2).

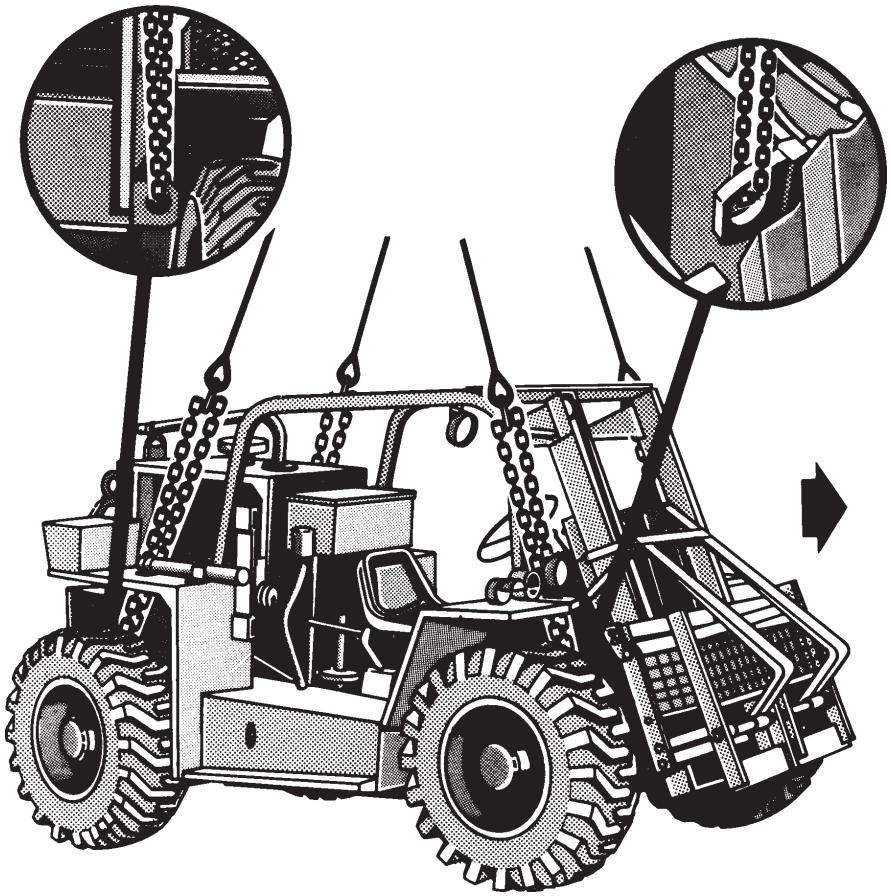

**RIGGING STEPS**

**1.** Position apex fitting on top of the falling object protection system (FOPS). Route outer sling legs 1 and 2 to the front of the forklift and inner sling legs 3 and 4 to the rear of the engine area. Sling legs 1 and 3 must be on the left side of the load.

**2.** Loop the chain end of sling leg 1 through the left front lift provision (not the tie-down provision) that is located directly above the forward axle housing between the left front tire and the hydraulic cylinder. Place the correct link from Table 8-21 in the grab hook. Repeat with sling leg 2 on the right front lift provision.

**3.** Loop the chain end of sling leg 3 through the left rear lift provision. Place the correct link from Table 8-21 in the grab hook. Repeat with sling leg 4 and the right rear lift provision. Secure excess chain with tape or nylon cord.

**4.** Pull the front sling legs up and tape or tie (breakaway technique) the grab links to the front side of the upper light brackets to ensure the sling legs do not become entangled.

**5.** Pull the aft sling legs together on top of the engine compartment and tie or tape (breakaway technique) the two grab links together.

**6.** Cluster and tie or tape (breakaway technique) all sling legs together on top of the FOPS to prevent entanglement during hookup and lift-off.

*Figure 8-21. Truck, Forklift, RT4000*

## 8-23. MHE-270/MHE-271 Truck, Forklift, RT4000

**a. Applicability.** The following items in Table 8-22 are certified for all helicopters with suitable lift capacity by the US Army Natick Research, Development, and Engineering Center:

**Table 8-22. MHE-270/MHE-271 Truck, Forklift, RT4000**

| NOMENCLATURE | MAX WEIGHT (POUNDS) | SLING SET | LINK COUNT FRONT/REAR | RECOMMENDED AIRSPEED (KNOTS) |
|---|---|---|---|---|
| MHE-270 without cab, NSN 3930-01-330-8907 | 11,700 | 25K | 40/3 | 125 |
| MHE-271 with cab, NSN 3930-01-330-8906 | 11,920 | 25K | 40/3 | 125 |

**b. Materials.** The following materials are required to rig this load:

**(1)** Sling set (25,000-pound capacity).

**(2)** Tape, adhesive, pressure-sensitive, 2-inch wide roll.

**(3)** Cord, nylon, Type III, 550-pound breaking strength.

**(4)** Webbing, cotton, 1/4-inch, 80-pound breaking strength.

**c. Personnel.** Two persons can prepare and rig each load in 15 minutes.

**d. Procedures.** The following procedures apply to this load:

**(1) Preparation.** Prepare the load using the following steps:

**(a)** Tilt the mast back as far as it will go.

**(b)** Ensure the fuel tank is less than 3/4 full.

**(c)** Tilt the tow bar up as far as it will go. Ensure both pins which hold the tow bar in an upright position are disengaged. The tow bar must be free to rotate.

**(d)** Place the transmission in neutral and straighten the front wheels.

**(e)** Engage the parking brake.

**(f)** Secure the doors, chains, fire extinguisher, and all loose equipment with tape or Type III nylon cord.

**(g)** Tape all lights, windows and glass fixtures.

**(h)** Tape the windshield wipers to the windshield.

**(2) Rigging.** Rig the load according to the steps in Figure 8-22.

**(3) Hookup.** The hookup team stands on the rear of the forklift. The static wand person discharges the static electricity with the static wand. The hookup person places the apex fitting onto the aircraft cargo hook. The hookup team then moves clear of the load but remains close to the load as the helicopter removes slack from the sling legs. When successful hookup is assured, the hookup team quickly exits the area underneath the helicopter to the designated rendezvous point.

**(4) Derigging.** Derigging is the reverse of the preparation and rigging procedures in steps d (1) and d (2).

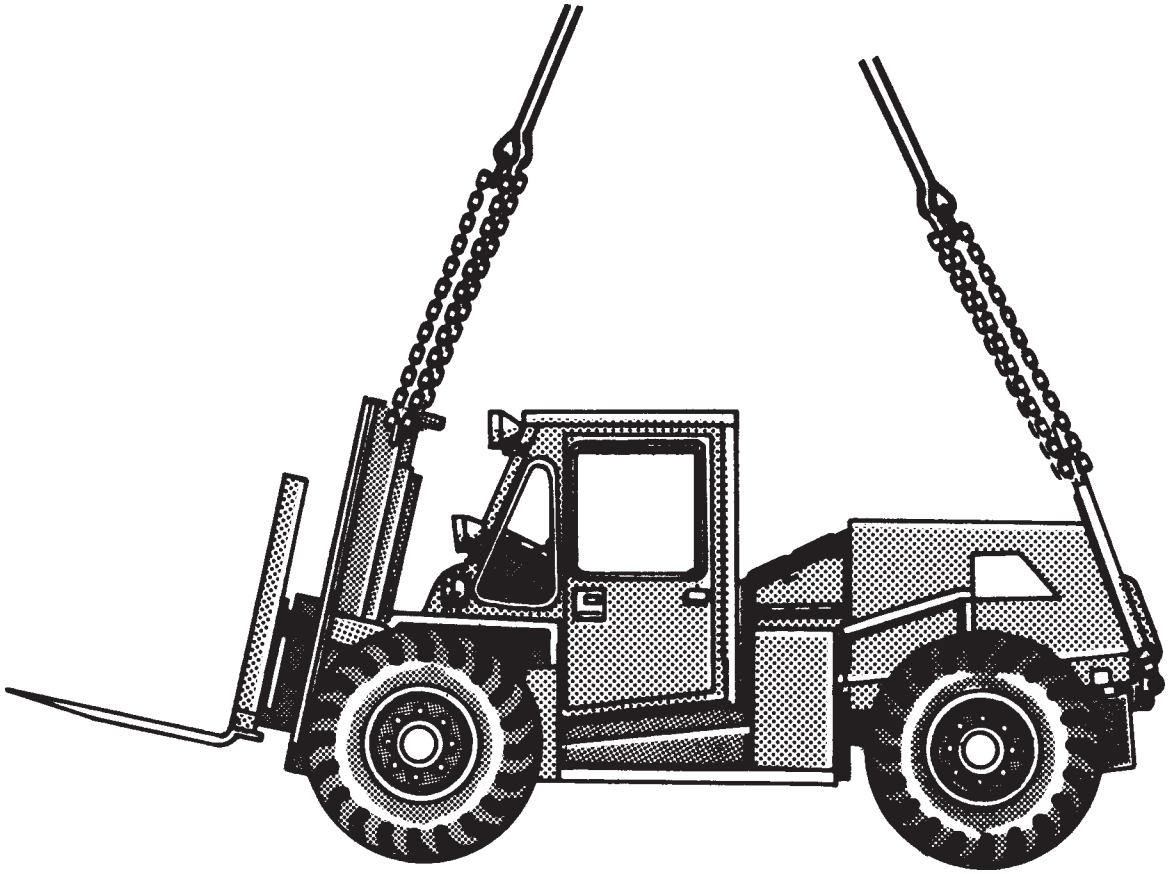

**RIGGING STEPS**

**1.** Position the apex fitting on top of the rear of the forklift. Route outer sling legs 1and 2 to the mast and inner sling legs 3 and 4 to the tow bar. Sling legs 1 and 3 must be on the left side of the load.

**2.** Loop the chain end of sling leg 1 through the left front lift provision located at the top of the left mast. Place the correct link from Table 8-22 in the grab hook. Repeat with sling leg 2 and the right front lift provision.

**3.** Loop the chain end of sling leg 3 down through the left rear lift provision located on the left side of the tow bar. Place the correct link from Table 8-22 in the grab hook. Repeat with sling leg 4 and the right rear lift provision.

**4.** Pull the front sling legs up and tape or tie (breakaway technique) to the top of the mast to ensure the sling legs do not become entangled.

**5.** Cluster and tie or tape (breakaway technique) all sling legs together on top of the forklift to prevent entanglement during hookup and lift-off.

*Figure 8-21. Truck, Forklift, RT4000*

## 8-24. Truck, Forklift, MC-6000

**a. Applicability.** The following item in Table 8-23 is certified for all helicopters with suitable lift capacity by the US Army Natick Research, Development, and Engineering Center:

**Table 8-23. Truck, Forklift, MC-6000**

| NOMENCLATURE | MAX WEIGHT (POUNDS) | SLING SET | LINK COUNT FRONT/REAR | RECOMMENDED AIRSPEED (KNOTS) |
|---|---|---|---|---|
| MC-6000 Forklift | 19,800 | 40K | 3/16 | 85 |

**b. Materials.** The following materials are required to rig this load:

**(1)** Sling set (40,000-pound capacity).

**(2)** Tape, adhesive, pressure-sensitive, 2-inch wide roll.

**(3)** Cord, nylon, Type III, 550-pound breaking strength.

**(4)** Webbing, cotton, 1/4-inch, 80-pound breaking strength.

**(5)** Tie-down strap, CGU-1B (4 each).

**(6)** Felt sheet, cattle hair, Type IV, 1/2-inch or suitable substitute.

**c. Personnel.** Two persons can prepare and rig each load in 10 minutes.

**d. Procedures.** The following procedures apply to this load:

**(1) Preparation.** Prepare the load using the following steps:

**(a)** Position the forks so they are sitting on the travel blocks and are tilted all the way aft.

**(b)** Ensure the fuel tank is less than 3/4 full. Place the transmission in neutral and engage the parking brake.

**(c)** Route two CGU-1/B cargo tie-down straps around the rear access doors.

**(d)** Route two CGU-1/B cargo tie-down straps around the engine access doors.

**(e)** Secure the tool box lid with tape or Type III nylon cord.

**(2) Rigging.** Rig the load according to the steps in Figure 8-23.

**(3) Hookup.** The hookup team stands on top of the engine deck. The static wand person discharges the static electricity with the static wand. The hookup person places the apex fitting onto the aircraft cargo hook. The hookup team then moves clear of the load but remains close to the load as the helicopter removes slack from the sling legs. When successful hookup is assured, the hookup team quickly exits the area underneath the helicopter to the designated rendezvous point.

**(4) Derigging.** Derigging is the reverse of the preparation and rigging procedures in steps d (1) and d (2).

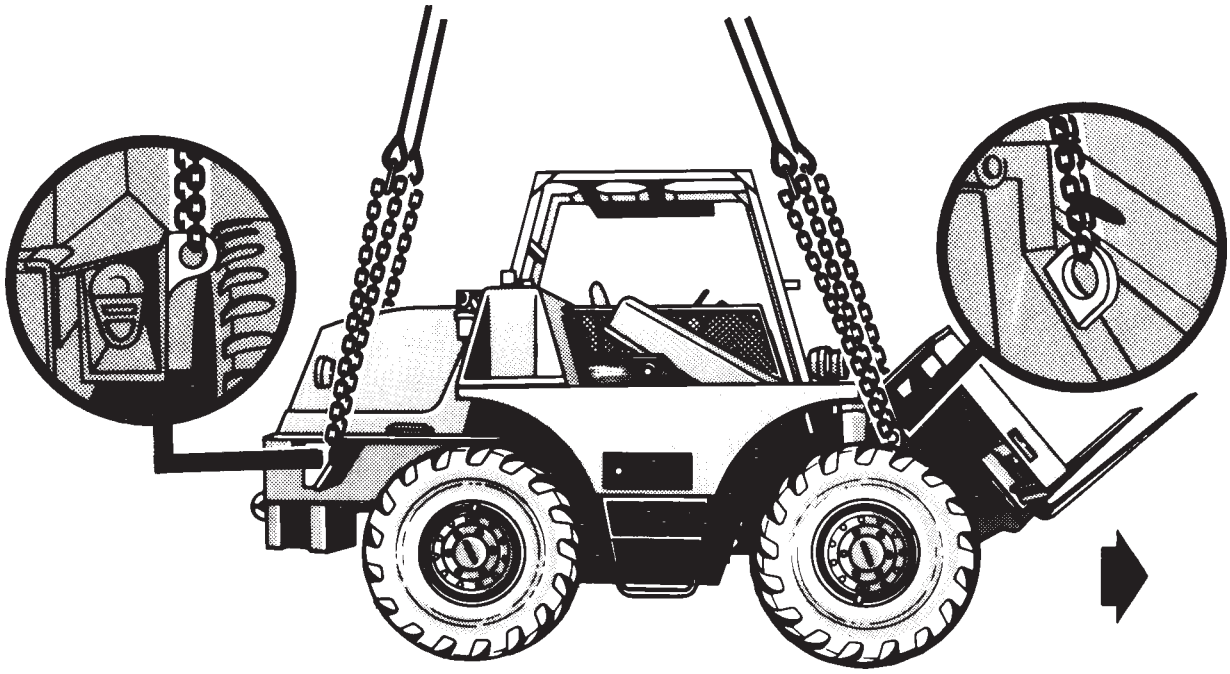

**RIGGING STEPS**

**1.** Position apex fitting on top of the roll over protection system (ROPS). Route outer sling legs 1 and 2 to the front of the forklift and inner sling legs 3 and 4 to the rear. Sling legs 1 and 3 must be on the left side of the load.

**2.** Loop the chain end of sling leg 1 through the left front lift provision mounted on the frame inboard of the left front tire. Place the correct link from Table 8-23 in the grab hook. Repeat with sling leg 2 and the right front lift provision.

**3.** Loop the chain end of sling leg 3 through the left rear lift provision located on the frame aft of the left rear tire. Place the correct link from Table 8-23 in the grab hook. Repeat with sling leg 4 and the right rear lift provision.

**4.** Lift the sling leg and tie or tape (breakaway technique) the grab hooks to the ROPS. Cluster and tie or tape (breakaway technique) all sling legs together on top of the forklift to prevent entanglement during hookup and lift-off.

*Figure 8-23. Truck, Forklift, MC-6000*

## 8-25. Extendable Boom Forklift (EBFL)

**a. Applicability.** The following item in Table 8-24 is certified for all helicopters with suitable lift capacity by the US Army Natick Research, Development, and Engineering Center:

**Table 8-24. Extendable Boom Forklift (EBFL)**

| NOMENCLATURE | MAX WEIGHT (POUNDS) | SLING SET | LINK COUNT FRONT/REAR | RECOMMENDED AIRSPEED (KNOTS) |
|---|---|---|---|---|
| Extendable Boom Forklift, (EBFL), TAMCN B2561 | 25,640 | 40K | 3/20 | 105 |

**b. Materials.** The following materials are required to rig this load:

**(1)** Sling set (40,000-pound capacity).

**(2)** Tape, adhesive, pressure-sensitive, 2-inch wide roll.

**(3)** Cord, nylon, Type III, 550-pound breaking strength.

**(4)** Webbing, cotton, 1/4-inch, 80-pound breaking strength.

**(5)** Tie-down strap, cargo, CGU-1/B (as required).

**c. Personnel.** Two persons can prepare and rig each load in 10 minutes.

**d. Procedures.** The following procedures apply to this load:

**(1) Preparation.** Prepare the load using the following steps:

**(a)** Secure the forks against the carriage using the CGU-1/Bs.

**(b)** Raise the carriage 10 inches off the ground, retract and raise the boom.

**(c)** Set the parking brake.

**(d)** Place the gear selector lever in neutral.

**(e)** Tape the exhaust pipe end.

**(2) Rigging.** Rig the load according to the steps in Figure 8-24.

**(3) Hookup.** The hookup team stands on the falling objects protection system (FOPS). The static wand person discharges the static electricity with the static wand. The hookup person places the apex fitting onto the aircraft cargo hook. The hookup team then moves clear of the load but remains close to the load as the helicopter removes slack from the sling legs. When successful hookup is assured, the hookup team quickly exits the area underneath the helicopter to the designated rendezvous point.

**(4) Derigging.** Derigging is the reverse of the preparation and rigging procedures in steps d (1) and d (2).

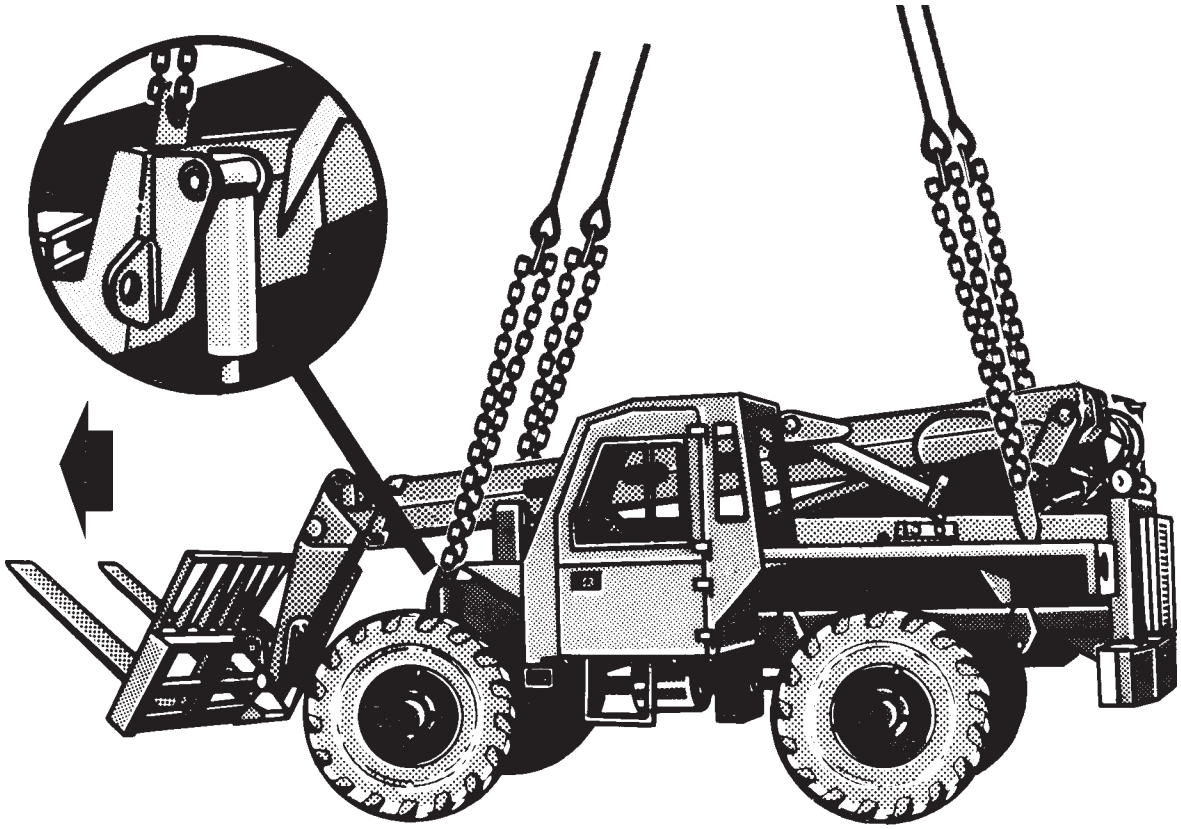

**RIGGING STEPS**

**1.** Position the apex fitting on top of the falling object protection system (FOPS). Route outer sling legs 1 and 2 to the front of the EBFL and inner sling legs 3 and 4 to the rear of the EBFL. Sling legs 1 and 3 must be on the left side of the load.

**2.** Loop the chain end of sling leg 1 through the left front lift provision. Place the correct link from Table 8-24 in the grab hook. Repeat with sling leg 2 and the right front lift provision.

**3.** Loop the chain end of sling leg 3 through the left rear lift provision. Place the correct link from Table 8-24 in the grab hook. Repeat with sling leg 4 and the right rear lift provision. Secure excess chain with tape or Type III nylon cord.

**4.** Cluster and tie or tape (breakaway technique) all sling legs together on top of the FOPS to prevent entanglement during hookup and lift-off.

*Figure 8-24. Extendable Boom Forklift (EBFL)*

## 8-26. Welding Shop on M200A1 Trailer

**a. Applicability.** The following item in Table 8-25 is certified for all helicopters with suitable lift capacity by the US Army Natick Research, Development, and Engineering Center:

**Table 8-25. Welding Shop on M200A1 Trailer**

| NOMENCLATURE | MAX WEIGHT (POUNDS) | SLING SET | LINK COUNT FRONT/REAR | RECOMMENDED AIRSPEED (KNOTS) |
|---|---|---|---|---|
| Welding Shop on M200A1 | 7,220 | 10K | 3/17 | 120 |

**b. Materials.** The following materials are required to rig this load:

**(1)** Sling set (10,000-pound capacity).

**(2)** Tape, adhesive, pressure-sensitive, 2-inch wide roll.

**(3)** Cord, nylon, Type III, 550-pound breaking strength.

**(4)** Webbing, cotton, 1/4-inch, 80-pound breaking strength.

**(5)** Webbing, nylon, tubular, 1/2-inch.

**c. Personnel.** Two persons can prepare and rig each load in 20 minutes.

**d. Procedures.** The following procedures apply to this load:

**(1) Preparation.** Prepare the load using the following steps:

**(a)** Secure all compressed gas cylinders to trailer with nylon cord. Ensure all the caps are properly installed.

**(b)** Secure the safety chains to tow bar of trailer with tape or Type III nylon cord.

**(c)** Secure rear outriggers in position by routing 1/2-inch tubular nylon over rear deck and under engine housing and tie on outriggers below step plate.

**(d)** Secure engine doors and control panel cover by routing nylon cord around entire engine and tying cord.

**(e)** The front leg must be in full down position.

**(2) Rigging.** Rig the load according to the steps in Figure 8-25.

**(3) Hookup.** The hookup team stands on top of the trailer. The static wand person discharges the static electricity with the static wand. The hookup person places the apex fitting onto the aircraft cargo hook. The hookup team then moves clear of the load but remains close to the load as the helicopter removes slack from the sling legs. When successful hookup is assured, the hookup team quickly exits the area underneath the helicopter to the designated rendezvous point.

**(4) Derigging.** Derigging is the reverse of the preparation and rigging procedures in steps d (1) and d (2).

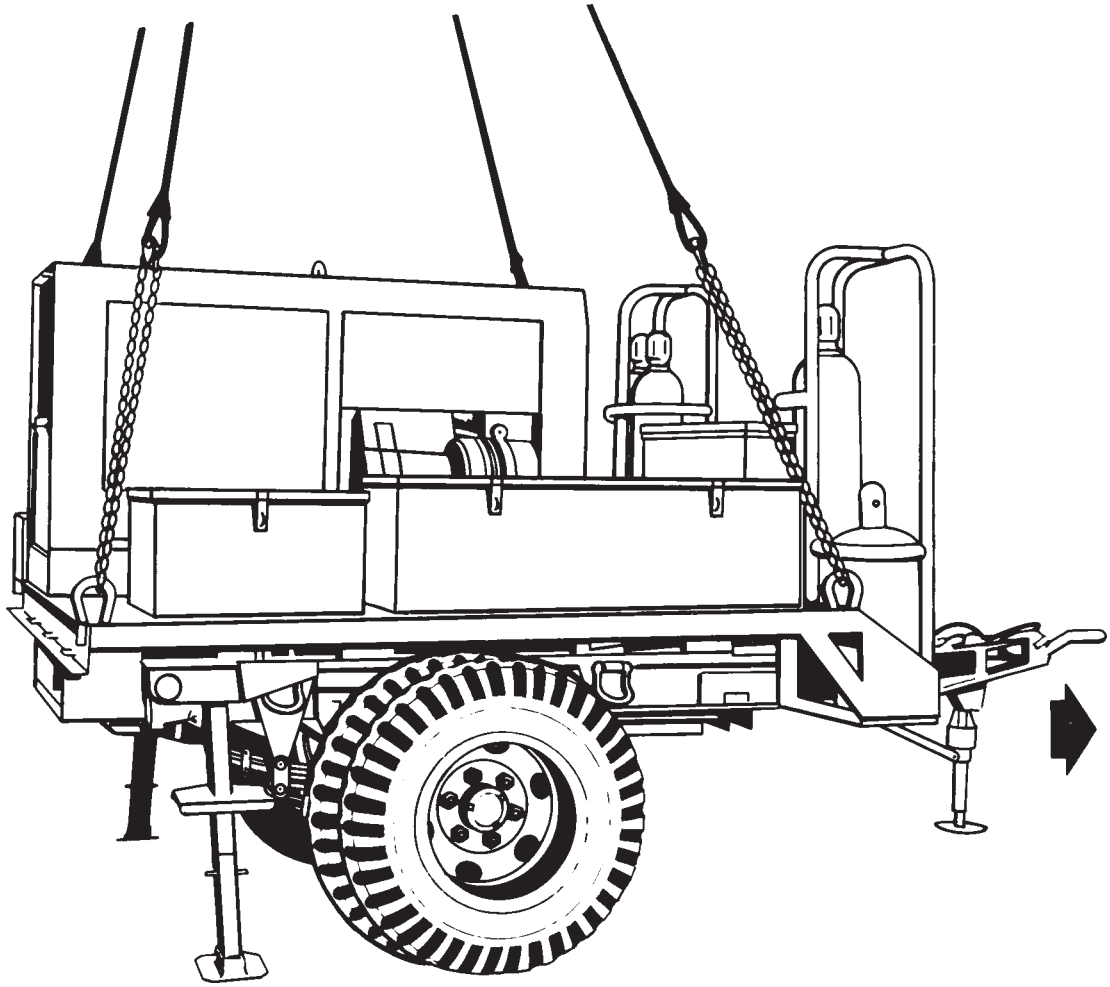

**RIGGING STEPS**

**1.** Position apex fitting on top of welding shop. Route outer sling legs 1 and 2 to the front of the trailer and inner sling legs 3 and 4 to the rear of the trailer. Sling legs 1 and 3 should be on the left side of the load.

**2.** Loop the chain end of sling leg 1 through the left front lift provision located on the left front corner of the trailer. Place the correct link from Table 8-25 in the grab hook. Repeat with sling leg 2 on the right front lift provision.

**3.** Loop the chain end of sling leg 3 through the left rear lift provision. Place the correct link from Table 8-25 in the grab hook. Repeat with sling leg 4 on the right rear lift provision. Secure excess chain with tape or nylon cord.

**4.** Cluster and tie or tape (breakaway technique) all sling legs together to prevent entanglement during hookup and lift-off.

*Figure 8-25. Welding Shop on M200A1 Trailer*

## 8-27. 250 CFM Air Compressor

**a. Applicability.** The following item in Table 8-26 is certified for all helicopters with suitable lift capacity by the US Army Natick Research, Development, and Engineering Center:

**Table 8-26. 250 CFM Air Compressor**

| NOMENCLATURE | MAX WEIGHT (POUNDS) | SLING SET | LINK COUNT FRONT/REAR | RECOMMENDED AIRSPEED (KNOTS) |
|---|---|---|---|---|
| Compressor, Air, 250 CFM, LIN E72804 | 7,425 | 10K | 3/15 | 100 |

**b. Materials.** The following materials are required to rig this load:

**(1)** Sling set (10,000-pound capacity).

**(2)** Tape, adhesive, pressure-sensitive, 2-inch wide roll.

**(3)** Cord, nylon, Type III, 550-pound breaking strength.

**(4)** Webbing, cotton, 1/4-inch, 80-pound breaking strength.

**(5)** Felt sheet, cattle hair, Type IV, 1/2-inch or suitable substitute.

**c. Personnel.** Two persons can prepare and rig each load in 20 minutes.

**d. Procedures.** The following procedures apply to this load:

**(1) Preparation.** Prepare the load using the following steps:

**(a)** Engage parking brake. Secure light cables with tape or nylon cord. Tie off hoses on reels to prevent unrolling. Close and latch all doors and lids.

**(b)** Ensure fuel cap is secure. Pad front corners of shelter along bolt lines with felt and tape.

**(c)** Tape or tie the lift provisions in the UP position to prevent fouling.

**(2) Rigging.** Rig the load according to the steps in Figure 8-26.

**(3) Hookup.** The hookup team stands on top of the trailer. The static wand person discharges the static electricity with the static wand. The hookup person places the apex fitting onto the aircraft cargo hook. The hookup team then moves clear of the load but remains close to the load as the helicopter removes slack from the sling legs. When successful hookup is assured, the hookup team quickly exits the area underneath the helicopter to the designated rendezvous point.

**(4) Derigging.** Derigging is the reverse of the preparation and rigging procedures in steps d (1) and d (2).

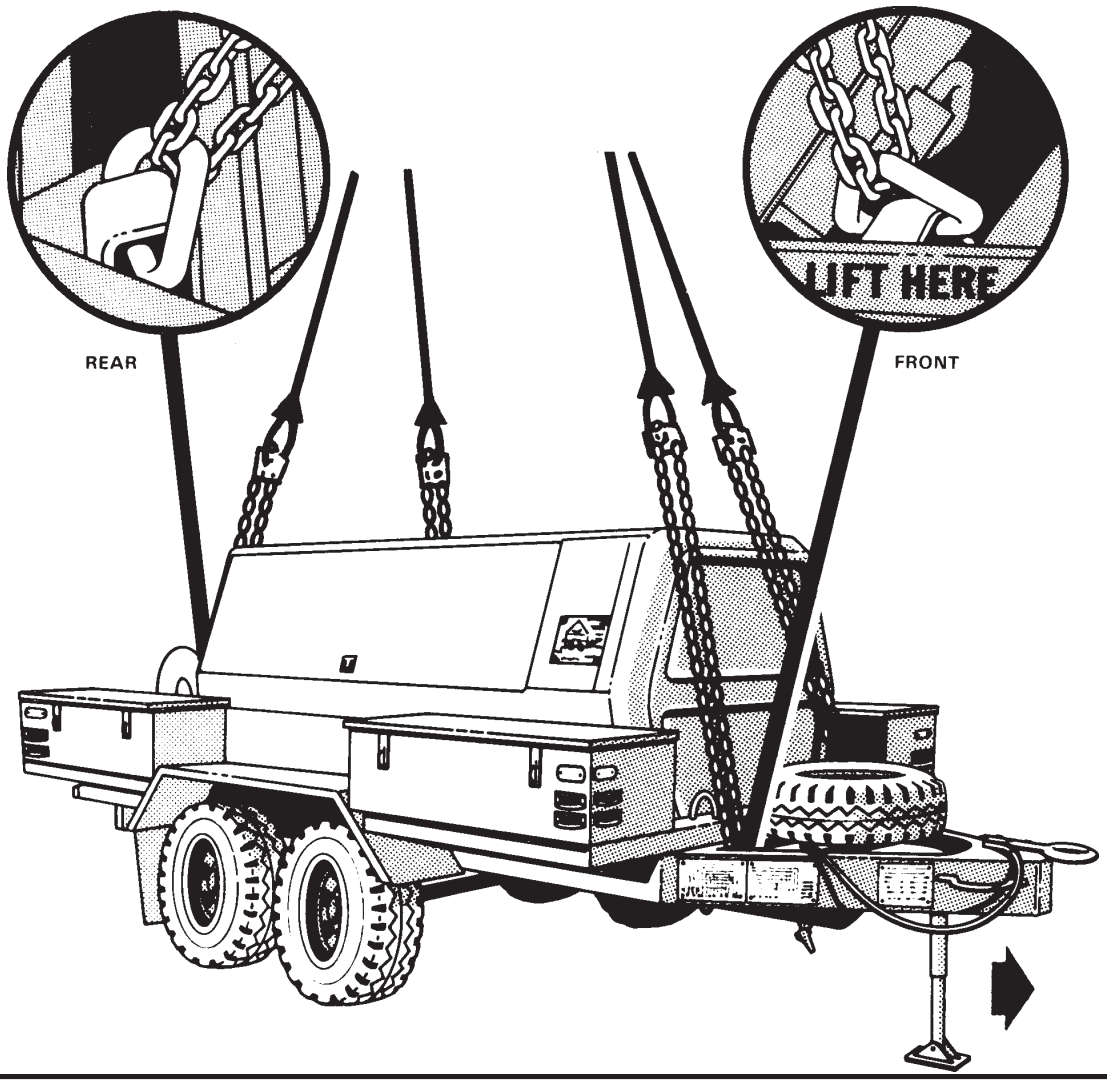


**RIGGING STEPS**

**1.** Carefully place apex fitting on top of the compressor. Route outer sling legs 1 and 2 to the front of the trailer and the inner sling legs 3 and 4 to the rear. Sling legs 1 and 3 must be on the left side of the load.

**2.** Loop the chain end from sling leg 1 through the left front lift provision on the tongue of the trailer. Place the correct link from Table 8-26 in the grab hook. Repeat this procedure for sling leg 2 on the right side of the tongue.

**3.** Loop the chain end from sling leg 3 through the left rear lift provision. Place the correct link from Table 8-26 in the grab hook. Repeat this procedure for sling leg 4. Tape or tie (breakaway technique) the sling legs to prevent fouling the hose reels. Secure excess chain with tape or nylon cord.

**4.** Cluster and tie or tape (breakaway technique) all sling legs together to prevent entanglement during hookup and lift-off.

*Figure 8-26. 250 CFM Air Compressor*

## 8-28. Pneumatic Tool and Compressor Outfit / Hydraulic Pioneer Tool Outfit (PTO) on M353 Trailer

**a. Applicability.** The following items in Table 8-27 are certified for all helicopters with suitable lift capacity by the US Army Natick Research, Development, and Engineering Center:

**Table 8-27. Tool Outfits on M353 Trailer**

| NOMENCLATURE | MAX WEIGHT (POUNDS) | SLING SET | LINK COUNT FRONT/REAR | RECOMMENDED AIRSPEED (KNOTS) |
|---|---|---|---|---|
| Pneumatic Tool and Compressor, TAMCN B0395 | 8,040 | 10K | 3/18 | 75 |
| Hydraulic Pioneer Tool Outfit (PTO) | 6,740 | 10K | 3/20 | 100 |

**b. Materials.** The following materials are required to rig this load:

**(1)** Sling set (10,000-pound capacity).

**(2)** Tape, adhesive, pressure-sensitive, 2-inch wide roll.

**(3)** Cord, nylon, Type III, 550-pound breaking strength.

**(4)** Webbing, cotton, 1/4-inch, 80-pound breaking strength.

**(5)** Felt sheet, cattle hair, Type IV, 1/2-inch or suitable substitute.

**c. Personnel.** Two persons can prepare and rig each load in 15 minutes.

**d. Procedures.** The following procedures apply to this load:

**(1) Preparation.** Prepare the load using the following steps:

**(a)** Engage both hand brakes.

**(b)** Ensure fuel cap is secure. Secure all loose gear and doors.

**(c)** Secure the light cable to the drawbar with Type III nylon cord or tape.

**(d)** Tape all lights, reflectors, and glass fixtures.

**(e)** Secure the two small wheels

**(2) Rigging.** Rig the load according to the steps in Figure 8-27.

**(3) Hookup.** The hookup team stands on top of the trailer. The static wand person discharges the static electricity with the static wand. The hookup person places the apex fitting onto the aircraft cargo hook. The hookup team then moves clear of the load but remains close to the load as the helicopter removes slack from the sling legs. When successful hookup is assured, the hookup team quickly exits the area underneath the helicopter to the designated rendezvous point.

**(4) Derigging.** Derigging is the reverse of the preparation and rigging procedures in steps d (1) and d (2).

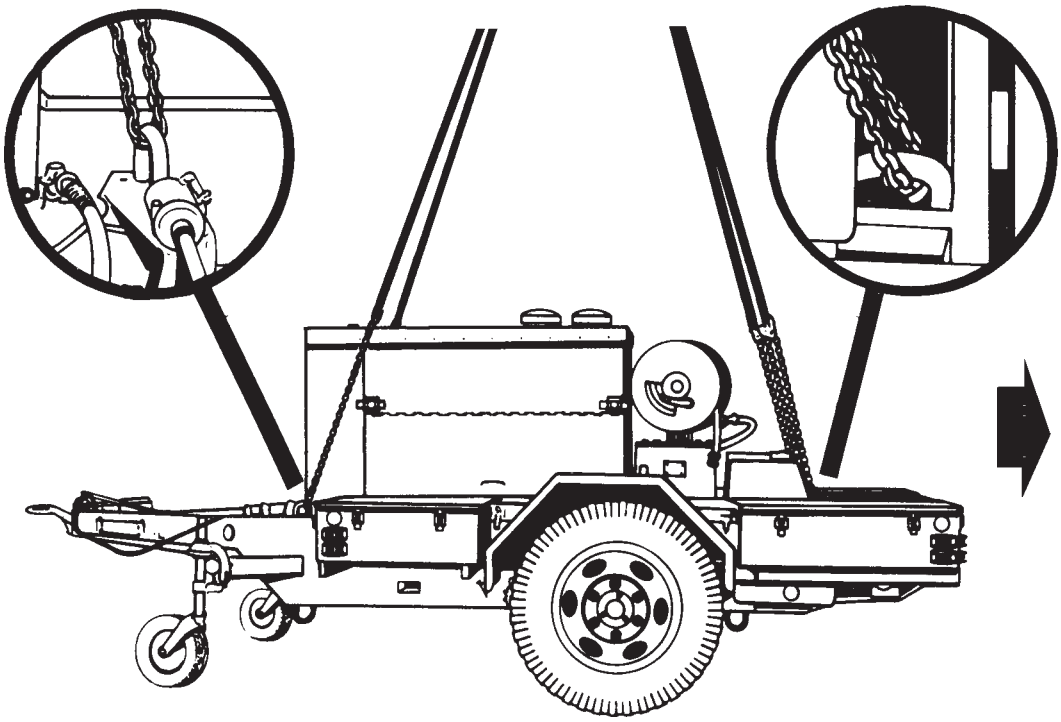

**RIGGING STEPS**

**1.** Position apex fitting on top of the compressor. Route outer sling legs 1 and 2 to the front of the trailer and inner sling legs 3 and 4 to the rear. Sling legs 1 and 3 must be on the left side of the load.

**2.** Loop the chain end of sling leg 1 through the lifting eye located at the left front corner of the trailer. Place the correct link from Table 8-27 in the grab hook. Repeat with sling leg 2 and the lifting eye located at the right front corner of the trailer.

**3.** Loop the chain end of sling leg 3 through the lifting eye at the left rear corner of the trailer. Place the correct link from Table 8-27 in the grab hook. Repeat with sling leg 4 and the lifting eye at the right rear corner of the trailer.

**4.** Cluster and tie or tape (breakaway technique) all sling legs together on top of the air compressor to prevent entanglement during hookup and lift-off. Ensure the rear sling legs are tied so they do not become entangled under the hose reels.

*Figure 8-27. Tool Outfits on M353 Trailer*

## 8-29. Fuel Dispensing System, Tactical Airfield (TAFDS)

**a. Applicability.** The following item in Table 8-28 is certified for all helicopters with suitable lift capacity by the US Army Natick Research, Development, and Engineering Center:

**Table 8-28. Fuel Dispensing System, Tactical Airfield (TAFDS)**

| NOMENCLATURE | MAX WEIGHT (POUNDS) | SLING SET | LINK COUNT FRONT/REAR | RECOMMENDED AIRSPEED (KNOTS) |
|---|---|---|---|---|
| Pump, 600 gallon per minute, TAFDS | 3,500 | 15K | 5/5 | 60 |

**b. Materials.** The following materials are required to rig this load:

**(1)** Sling set (15,000-pound capacity).

**(2)** Tape, adhesive, pressure-sensitive, 2-inch wide roll.

**(3)** Cord, nylon, Type III, 550-pound breaking strength.

**(4)** Webbing, cotton, 1/4-inch, 80-pound breaking strength.

**c. Personnel.** Two persons can prepare and rig each load in 15 minutes.

**d. Procedures.** The following procedures apply to this load:

**(1) Preparation.** Prepare the load using the following steps:

**(a)** Secure the battery cover, inlet plugs, and outlet plugs with tape or Type III nylon cord.

**(b)** Tape the engine intake and exhaust openings.

**(c)** Secure the canvas cover on the pump with Type III nylon cord.

**(d)** Engage one hand brake.

**(2) Rigging.** Rig the load according to the steps in Figure 8-28.

**(3) Hookup.** The hookup team stands on the pump tires. The static wand person discharges the static electricity with the static wand. The hookup person places the apex fitting onto the aircraft cargo hook. The hookup team then moves clear of the load but remains close to the load as the helicopter removes slack from the sling legs. When successful hookup is assured, the hookup team quickly exits the area underneath the helicopter to the designated rendezvous point.

**(4) Derigging.** Derigging is the reverse of the preparation and rigging procedures in steps d (1) and d (2).

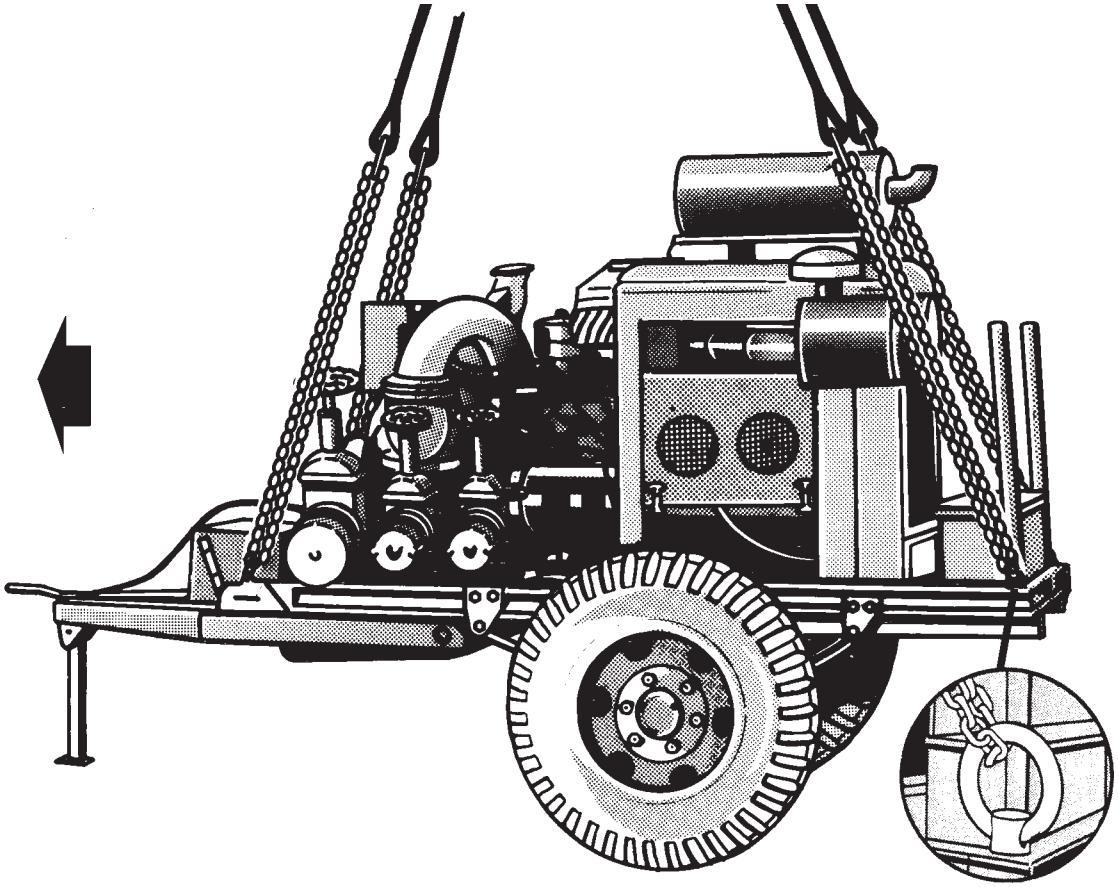

**RIGGING STEPS**

**1.** Position apex fitting on top of the pump. Route outer sling legs 1 and 2 to the front of the trailer and inner sling legs 3 and 4 to the rear. Sling legs 1 and 3 must be on the left side of the load.

**2.** Loop the chain end of sling leg 1 through the left front lift provision located on the left front corner of the trailer. Place the correct link from Table 8-28 in the grab hook. Repeat with sling leg 2 and the right front lift provision.

**3.** Loop the chain end of sling leg 3 through the left rear lift provision located on the left rear corner of the trailer. Place the correct link from Table 8-28 in the grab hook. Repeat with sling leg 4 and the right rear lift provision.

**4.** Cluster and tie or tape (breakaway technique) all sling legs together on top of the pump to prevent entanglement during hookup and lift-off.

*Figure 8-28. Fuel Dispensing System, Tactical Airfield (TAFDS)*

## 8-30. Bath Unit Mounted on the M103 Trailer

**a. Applicability.** The following item in Table 8-29 is certified for all helicopters with suitable lift capacity by the US Army Natick Research, Development, and Engineering Center:

**Table 8-29. Bath Unit on M103 Trailer**

| NOMENCLATURE | MAX WEIGHT (POUNDS) | SLING SET | LINK COUNT FRONT/REAR | RECOMMENDED AIRSPEED (KNOTS) |
|---|---|---|---|---|
| Bath Unit on M103 Trailer | 4,800 | 15K | 16/30 | 45 |

**b. Materials.** The following materials are required to rig this load:

**(1)** Sling set (15,000-pound capacity).

**(2)** Tape, adhesive, pressure-sensitive, 2-inch wide roll.

**(3)** Cord, nylon, Type III, 550-pound breaking strength.

**(4)** Webbing, cotton, 1/4-inch, 80-pound breaking strength.

**c. Personnel.** Two persons can prepare and rig each load in 15 minutes.

**d. Procedures.** The following procedures apply to this load:

**(1) Preparation.** Prepare the load using the following steps:

**(a)** Ensure all tanks are empty. Secure all tank covers and lids with tape or Type III nylon cord.

**(b)** Raise and secure the jack mounts 1 foot off the ground.

**(c)** Engage the parking brake.

**(2) Rigging.** Rig the load according to the steps in Figure 8-29.

**(3) Hookup.** The hookup team stands beside the bath unit. The static wand person discharges the static electricity with the static wand. The hookup person places the apex fitting onto the aircraft cargo hook. The hookup team then moves clear of the load but remains close to the load as the helicopter removes slack from the sling legs. When successful hookup is assured, the hookup team quickly exits the area underneath the helicopter to the designated rendezvous point.

**(4) Derigging.** Derigging is the reverse of the preparation and rigging procedures in steps d (1) and d (2).

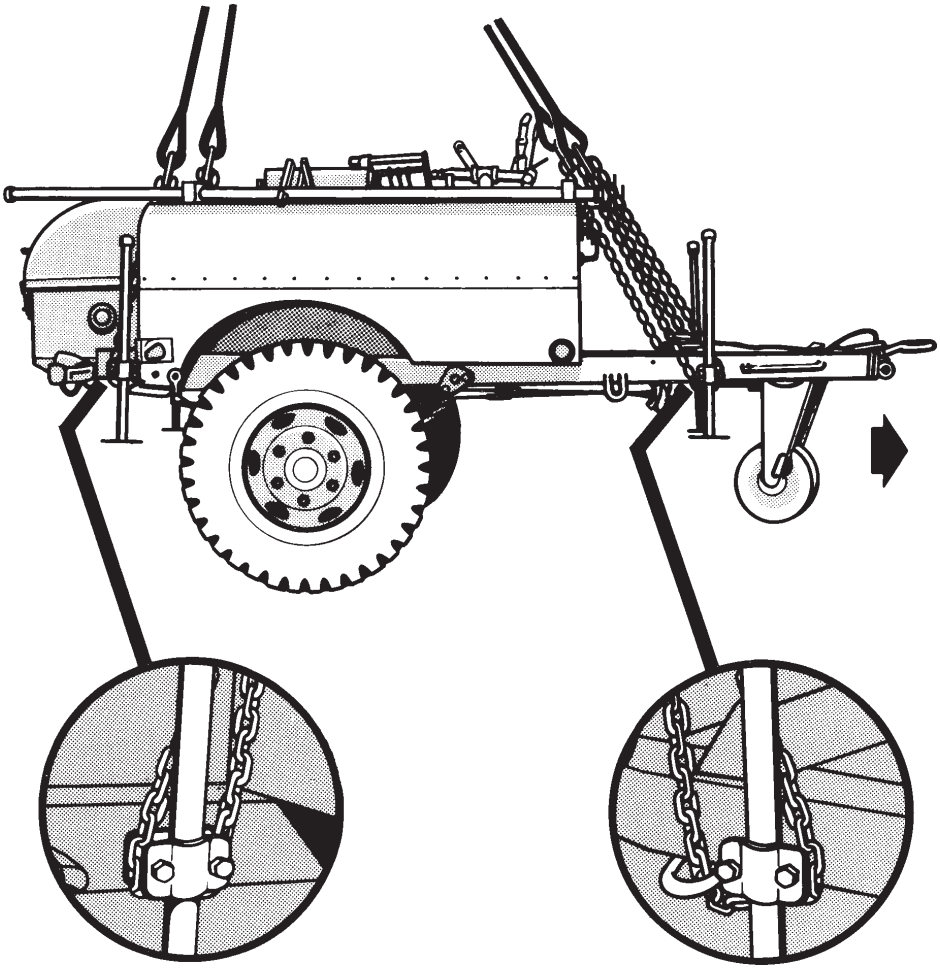

**RIGGING STEPS**

**1.** Position apex fitting on top of the bath unit. Route outer sling legs 1 and 2 to the front of the trailer and inner sling legs 3 and 4 to the rear. Sling legs 1 and 3 must be on the left side of the load.

**2.** Loop the chain end of sling leg 1 through the left front steady jack eye and under the jack mount. Place the correct link from Table 8-29 in the grab hook. Repeat with sling leg 2 and the right front jack mount. Secure excess chain with tape or Type III nylon cord.

**3.** Loop the chain end of sling leg 3 around the left rear jack mount. Place the correct link from Table 8-29 in the grab hook. Repeat with sling leg 4 and the right rear jack mount. Secure excess chain with tape or Type III nylon cord.

**4.** Cluster and tie or tape (breakaway technique) all sling legs together on top of the bath unit to prevent entanglement during hookup and lift-off.

*Figure 8-29. Bath Unit on M103 Trailer*

## 8-31. Boat, Bridge Erection

**a. Applicability.** The following item in Table 8-30 is certified for all helicopters with suitable lift capacity by the US Army Natick Research, Development, and Engineering Center:

**Table 8-30. Boat, Bridge Erection**

| NOMENCLATURE | MAX WEIGHT (POUNDS) | SLING SET | LINK COUNT FRONT/REAR | RECOMMENDED AIRSPEED (KNOTS) |
|---|---|---|---|---|
| Boat, Bridge Erection, 27-foot | 6,000 | 15K | 4/4 | 60 |

**b. Materials.** The following materials are required to rig this load:

**(1)** Sling set (15,000-pound capacity).

**(2)** Tape, adhesive, pressure-sensitive, 2-inch wide roll.

**(3)** Cord, nylon, Type III, 550-pound breaking strength.

**(4)** Webbing, cotton, 1/4-inch, 80-pound breaking strength.

**c. Personnel.** Two persons can prepare and rig each load in 30 minutes.

**d. Procedures.** The following procedures apply to this load:

**(1) Preparation.** Prepare the load using the following steps:

**(a)** Remove and secure the canvas cover in the stern of the boat.

**(b)** Remove or secure all loose items of equipment.

**(c)** Attach the front section to the rear section of the boat.

**(d)** Tape all lights, gages, compass, and glass items.

**(e)** Ensure the shipping cradles are removed from both boat sections.

**(2) Rigging.** Rig the load according to the steps in Figure 8-30.

**(3) Hookup.** The hookup team stands on top of the boat. The static wand person discharges the static electricity with the static wand. The hookup person places the apex fitting onto the aircraft cargo hook. The hookup team then moves clear of the load but remains close to the load as the helicopter removes slack from the sling legs. When successful hookup is assured, the hookup team quickly exits the area underneath the helicopter to the designated rendezvous point.

**(4) Derigging.** Derigging is the reverse of the preparation and rigging procedures in steps d (1) and d (2).

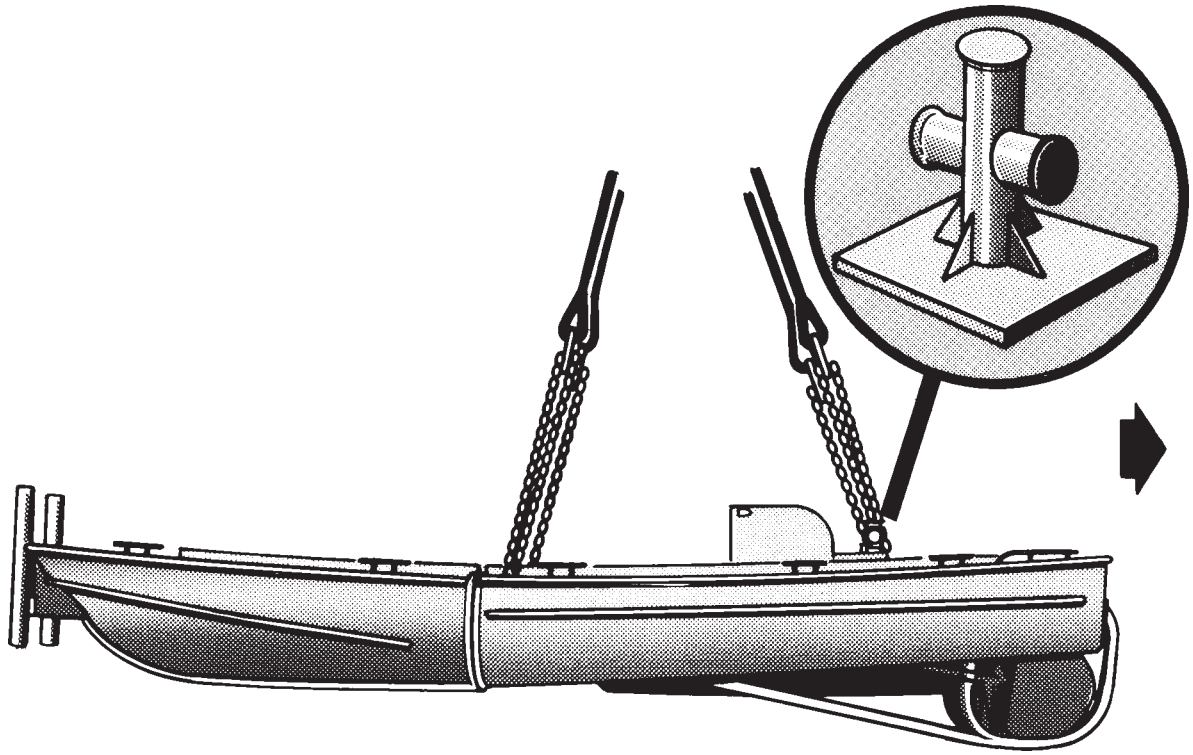

**RIGGING STEPS**

**1.** Position apex fitting on top of the center of the boat. Route outer sling legs 1 and 2 to the stern section and inner sling legs 3 and 4 to the bow section. Make sure chains for sling legs 3 and 4 are forward (toward the bow) of the horizontal arms on the rear towing bitt. Sling legs 1 and 3 must be on the same side of the load.

**2.** Loop the chain end of sling leg 1 through the left rear lifting U-bolt located on the left side of the stern section. Place the correct link from Table 8-30 in the grab hook. Repeat with sling leg 2 and the right rear lifting U-bolt.

**3.** Wrap the chain end of sling leg 3 two times around the vertical post of the rear towing bitt. Wrap the chain end of sling leg 4 two times in the opposite direction around the vertical post of the rear towing bitt. Place the correct link from Table 8-30 in the grab hook. Ensure the chains are below the horizontal arm of the towing bitt.

**4.** Cluster and tie or tape (breakaway technique) all sling legs together on top of the boat to prevent entanglement during hookup and lift-off.

*Figure 8-30. Boat, Bridge Erection*

## 8-32. Bridge, Medium Girder, Dry Gap (MGB)

**a. Applicability.** The following item in Table 8-31 is certified for all helicopters with suitable lift capacity by the US Army Natick Research, Development, and Engineering Center:

**Table 8-31. Medium Girder Bridge**

| NOMENCLATURE | MAX WEIGHT (POUNDS) | SLING SET | LINK COUNT FRONT/REAR | RECOMMENDED AIRSPEED (KNOTS) |
|---|---|---|---|---|
| Medium Girder Bridge, Ramp Section, Palletized, TAMCN B0152 | 6,500 | 15K | 10/5 | 70 |

**b. Materials.** The following materials are required to rig this load:

**(1)** Sling set (15,000-pound capacity).

**(2)** Tape, adhesive, pressure-sensitive, 2-inch wide roll.

**(3)** Cord, nylon, Type III, 550-pound breaking strength.

**(4)** Webbing, cotton, 1/4-inch, 80-pound breaking strength.

**(5)** Tie-down strap, cargo, CGU-1/B (as required).

**c. Personnel.** Two persons can prepare and rig each load in 20 minutes.

**d. Procedures.** The following procedures apply to this load:

**(1) Preparation.** Prepare the load using the following steps:

**(a)** The larger ends of the bridge sections are at the front of the load.

**(b)** Ensure all sections of the bridge are properly secured to the pallet using the cargo tie-down straps. Route two straps from the pallet forward end to the aft end. Route the remaining straps from one side of the pallet, over the ramp sections, and to the other side of the pallet. Tighten all tie-down straps.

**(2) Rigging.** Rig the load according to the steps in Figure 8-31.

**(3) Hookup.** The hookup team stands on top of the bridge ramp sections. The static wand person discharges the static electricity with the static wand. The hookup person places the apex fitting onto the aircraft cargo hook. The hookup team then moves clear of the load but remains close to the load as the helicopter removes slack from the sling legs. When successful hookup is assured, the hookup team quickly exits the area underneath the helicopter to the designated rendezvous point.

**(4) Derigging.** Derigging is the reverse of the preparation and rigging procedures in steps d (1) and d (2).

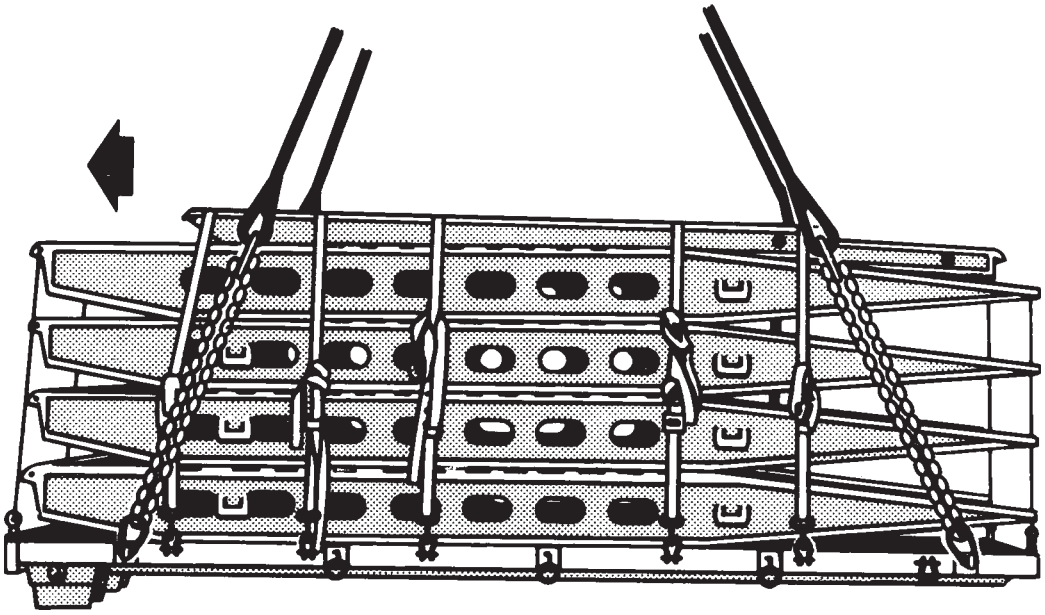

**RIGGING STEPS**

**1.** Position apex fitting on top of the ramp sections. Route outer sling legs 1 and 2 to the front of the load and inner sling legs 3 and 4 to the rear. Sling legs 1 and 3 must be on the left side of the load.

**2.** Loop the chain end of sling leg 1 through the pallet left front lift provision. Place the correct link from Table 8-31 in the grab hook. Repeat with sling leg 2 and the pallet right front lift provision. Secure excess chain with tape or nylon cord.

**3.** Loop the chain end of sling leg 3 through the pallet left rear lift provision. Place the correct link from Table 8-31 in the grab hook. Repeat with sling leg 4 and the pallet right rear lift provision.

**4.** Cluster and tie or tape (breakaway technique) all sling legs together on top of the bridge ramp sections to prevent entanglement during hookup and lift-off.

*Figure 8-31. Medium Girder Bridge*

## 8-33. Ribbon Bridge Ramp Bay

**a. Applicability.** The following item in Table 8-32 is certified for all helicopters with suitable lift capacity by the US Army Natick Research, Development, and Engineering Center:

**Table 8-32. Ribbon Bridge Ramp Bay**

| NOMENCLATURE | MAX WEIGHT (POUNDS) | SLING SET | LINK COUNT FRONT/REAR | RECOMMENDED AIRSPEED (KNOTS) |
|---|---|---|---|---|
| Ribbon Bridge, Ramp Bay | 11,560 | 25K | 3/60 | 90 |

**b. Materials.** The following materials are required to rig this load:

**(1)** Sling set (25,000-pound capacity).

**(2)** Tape, adhesive, pressure-sensitive, 2-inch wide roll.

**(3)** Cord, nylon, Type III, 550-pound breaking strength.

**(4)** Webbing, cotton, 1/4-inch, 80-pound breaking strength.

**c. Personnel.** Two persons can prepare and rig each load in 15 minutes.

**d. Procedures.** The following procedures apply to this load:

**(1) Preparation.** Prepare the load using the following steps:

**(a)** The shorter end of the bay section is the front of the load.

**(b)** Ensure all the bay latches are securely fastened.

**(2) Rigging.** Rig the load according to the steps in Figure 8-32.

**(3) Hookup.** The hookup team stands on top of the ramp bays. The static wand person discharges the static electricity with the static wand. The hookup person places the apex fitting onto the aircraft cargo hook. The hookup team then moves clear of the load but remains close to the load as the helicopter removes slack from the sling legs. When successful hookup is assured, the hookup team quickly exits the area underneath the helicopter to the designated rendezvous point.

**(4) Derigging.** Derigging is the reverse of the preparation and rigging procedures in steps d (1) and d (2).

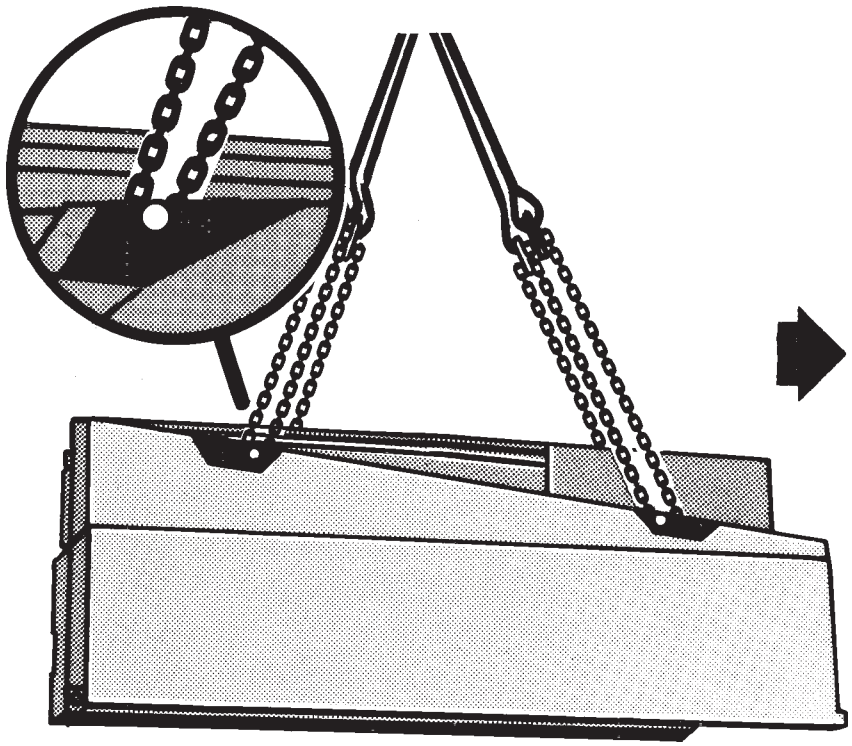

**RIGGING STEPS**

**1.** Position the apex fitting on top of the ramp bay. Route outer sling legs 1 and 2 to the front of the bay and inner sling legs 3 and 4 to the rear of the bay. Sling legs 1 and 3 must be on the left side of the load.

**2.** Loop the chain end of sling leg 1 through the left front lift provision (a pin located between two plates on the top edge of the bay). Place the correct link from Table 8-32 in the grab hook. Repeat with sling leg 2 and the right front lift provision.

**3.** Loop the chain end of sling leg 3 through the left rearlift provision (a pin located between two plates on the top left edge of the bay). Place the correct link from Table 8-32 in the grab hook. Repeat with sling leg 4 and the right rear lift provision. Secure the excess chain with Type III nylon cord.

**4.** Pull the chain of each sling leg up tightly, tape or tie with nylon cord just above the lift provisions to prevent the chain from falling down between the plates.

**5.** Cluster and tie or tape (breakaway technique) all sling legs together on top of the bay to prevent entanglement during hookup and lift-off.

***Figure 8-32. Ribbon Bridge Ramp Bay***

## 8-34. Ribbon Bridge Interior Bay

**a. Applicability.** The following item in Table 8-33 is certified for all helicopters with suitable lift capacity by the US Army Natick Research, Development, and Engineering Center:

**Table 8-33. Ribbon Bridge Interior Bay**

| NOMENCLATURE | MAX WEIGHT (POUNDS) | SLING SET | LINK COUNT FRONT/REAR | RECOMMENDED AIRSPEED (KNOTS) |
|---|---|---|---|---|
| Ribbon Bridge, Interior Bay | 11,800 | 25K | 3/15 | 70 |

**b. Materials.** The following materials are required to rig this load:

**(1)** Sling set (25,000-pound capacity).

**(2)** Tape, adhesive, pressure-sensitive, 2-inch wide roll.

**(3)** Cord, nylon, Type III, 550-pound breaking strength.

**(4)** Webbing, cotton, 1/4-inch, 80-pound breaking strength.

**c. Personnel.** Two persons can prepare and rig each load in 15 minutes.

**d. Procedures.** The following procedures apply to this load:

**(1) Preparation.** Prepare the load using the following steps:

**(a)** The end with the roadway lock is the front of the load.

**(b)** Ensure all the bay latches are securely fastened.

**(2) Rigging.** Rig the load according to the steps in Figure 8-33.

**(3) Hookup.** The hookup team stands on top of the interior bays. The static wand person discharges the static electricity with the static wand. The hookup person places the apex fitting onto the aircraft cargo hook. The hookup team then moves clear of the load but remains close to the load as the helicopter removes slack from the sling legs. When successful hookup is assured, the hookup team quickly exits the area underneath the helicopter to the designated rendezvous point.

**(4) Derigging.** Derigging is the reverse of the preparation and rigging procedures in steps d (1) and d (2).

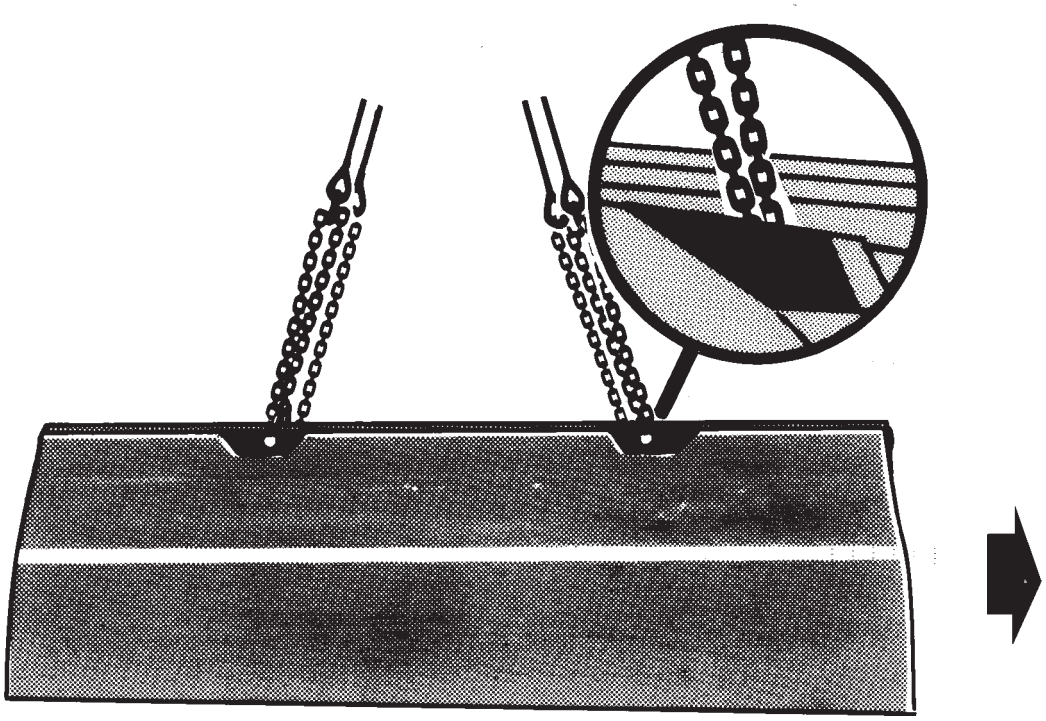

**RIGGING STEPS**

**1.** Position the apex fitting on top of the interior bay. Route outer sling legs 1 and 2 to the front of the bay and inner sling legs 3 and 4 to the rear of the bay. The front of the bay is the end with the roadway lock. Sling legs 1 and 3 must be on the left side of the load.

**2.** Loop the chain end of sling leg 1 through the left front lift provision (a pin between two plates on the top left edge of the bay). Place the correct link from Table 8-33 in the grab hook. Repeat with sling leg 2 and the right front lift provision.

**3.** Loop the chain end of sling leg 3 through the left rear lift provision (a pin located between two plates on the top left edge of the bay). Place the correct link from Table 8-33 in the grab hook. Repeat with sling leg 4 and the right rear lift provision. Secure excess chain with tape or nylon cord.

**4.** Pull the chain of each sling leg up tightly, tape or tie with nylon cord just above the lift provisions to prevent the chain from falling down between the plates.

**5.** Cluster and tie or tape (breakaway technique) all sling legs together on top of the bay to prevent entanglement during hookup and lift-off.

*Figure 8-33. Ribbon Bridge Interior Bay*

## 8-35. Water Purification Unit-Reverse Osmosis (ROWPU)

**a. Applicability.** The following item in Table 8-34 is certified for all helicopters with suitable lift capacity by the US Army Natick Research, Development, and Engineering Center:

**Table 8-34. Water Purification Unit-Reverse Osmosis**

| NOMENCLATURE | MAX WEIGHT (POUNDS) | SLING SET | LINK COUNT FRONT/REAR | RECOMMENDED AIRSPEED (KNOTS) |
|---|---|---|---|---|
| MC257 Water Purification Unit-Reverse Osmosis, 600 gallons per hour (GPH), Skid Mounted, TAMCN B2064 | 7,400 | 15K | 5/5 | 90 |

**b. Materials.** The following materials are required to rig this load:

**(1)** Sling set (15,000-pound capacity).

**(2)** Tape, adhesive, pressure-sensitive, 2-inch wide roll.

**(3)** Cord, nylon, Type III, 550-pound breaking strength.

**(4)** Webbing, cotton, 1/4-inch, 80-pound breaking strength.

**c. Personnel.** Two persons can prepare and rig each load in 15 minutes.

**d. Procedures.** The following procedures apply to this load:

**(1) Preparation.** Prepare the load using the following steps:

**(a)** The water pump end is the front of the load.

**(b)** Secure all containers, boxes, and other equipment with tape or Type III nylon cord.

**(c)** Tape all glass fixtures.

**(2) Rigging.** Rig the load according to the steps in Figure 8-34.

**(3) Hookup.** The hookup team stands on top of the unit. The static wand person discharges the static electricity with the static wand. The hookup person places the apex fitting onto the aircraft cargo hook. The hookup team then moves clear of the load but remains close to the load as the helicopter removes slack from the sling legs. When successful hookup is assured, the hookup team quickly exits the area underneath the helicopter to the designated rendezvous point.

**(4) Derigging.** Derigging is the reverse of the preparation and rigging procedures in steps d (1) and d (2).

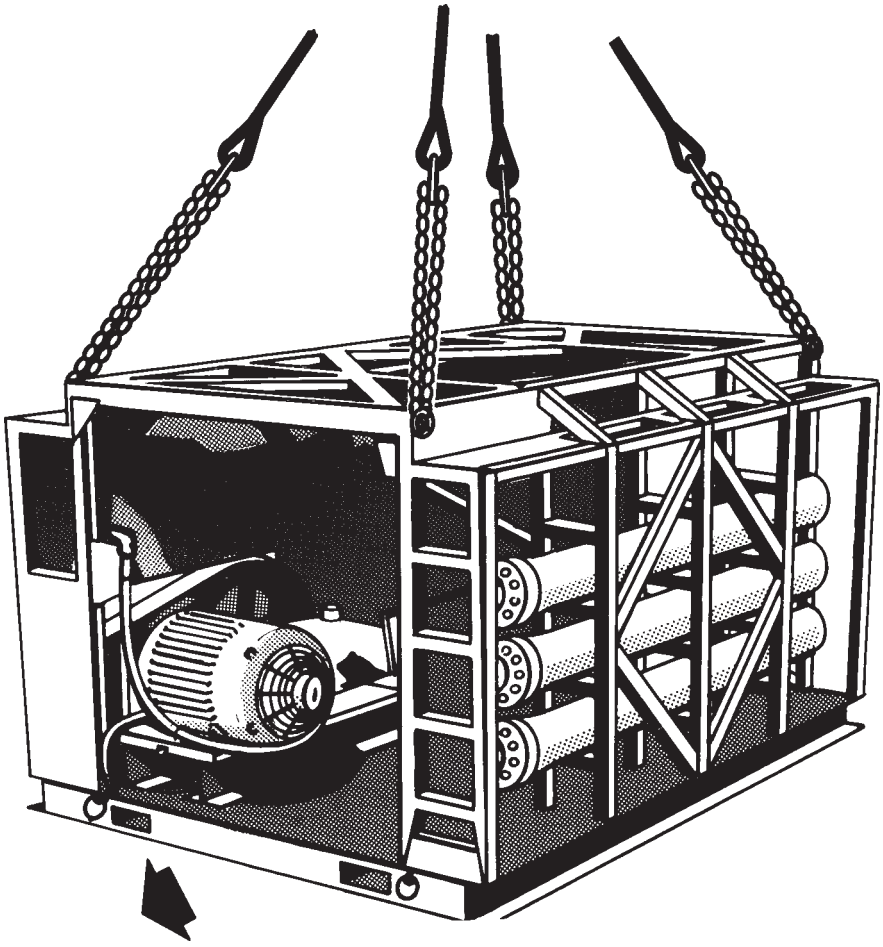

**RIGGING STEPS**

**1.** Position apex fitting on top of the ROWPU unit. Route outer sling legs 1 and 2 to the front of the unit and inner sling legs 3 and 4 to the rear. Sling legs 1 and 3 must be on the left side of the load.

**2.** Loop the chain end of sling leg 1 through the left front lift ring on the top of the unit. Place the correct link from Table 8-34 in the grab hook. Repeat with sling leg 2 and the right front lift ring.

**3.** Loop the chain end of sling leg 3 through the left rear lift ring. Place the correct link from Table 8-34 in the grab hook. Repeat with sling leg 4 and the right rear lift ring.

**4.** Cluster and tie or tape (breakaway technique) all sling legs together on top of the unit to prevent entanglement during hookup and lift-off.

***Figure 8-34. Water Purification Unit-Reverse Osmosis (ROWPU)***

## 8-36. MS114 WFD Concrete Mixer

**a. Applicability.** The following item in Table 8-35 is certified for all helicopters with suitable lift capacity by the US Army Natick Research, Development, and Engineering Center:

**Table 8-35. MS114 WFD Concrete Mixer**

| NOMENCLATURE | MAX WEIGHT (POUNDS) | SLING SET | LINK COUNT FRONT/REAR | RECOMMENDED AIRSPEED (KNOTS) |
|---|---|---|---|---|
| MS114WFD Concrete Mixer, TAMCN B1326 | 4,223 | 15K | 50/30 | 70 |

**b. Materials.** The following materials are required to rig this load:

**(1)** Sling set (15,000-pound capacity).

**(2)** Tape, adhesive, pressure-sensitive, 2-inch wide roll.

**(3)** Cord, nylon, Type III, 550-pound breaking strength.

**(4)** Webbing, cotton, 1/4-inch, 80-pound breaking strength.

**(5)** Tie-down strap, cargo, CGU-1/B (as required).

**c. Personnel.** Two persons can prepare and rig each load in 10 minutes.

**d. Procedures.** The following procedures apply to this load:

**(1) Preparation.** Prepare the load using the following steps:

**(a)** Secure all hoses, cables, or chains with tape or nylon cord.

**(b)** Secure the towbar in the raised/locked position.

**(c)** Raise the scoop to the up position and secure the scoop elevating wheel with the tie-down strap.

**(d)** Since the mixer does not have a hand brake, loop a tie-down strap through a wheel rim and secure it to the frame to keep the wheel from turning.

**(2) Rigging.** Rig the load according to the steps in Figure 8-35.

**(3) Hookup.** The hookup team stands on top of the mixer. The static wand person discharges the static electricity with the static wand. The hookup person places the apex fitting onto the aircraft cargo hook. The hookup team then moves clear of the load but remains close to the load as the helicopter removes slack from the sling legs. When successful hookup is assured, the hookup team quickly exits the area underneath the helicopter to the designated rendezvous point.

**(4) Derigging.** Derigging is the reverse of the preparation and rigging procedures in steps d (1) and d (2).

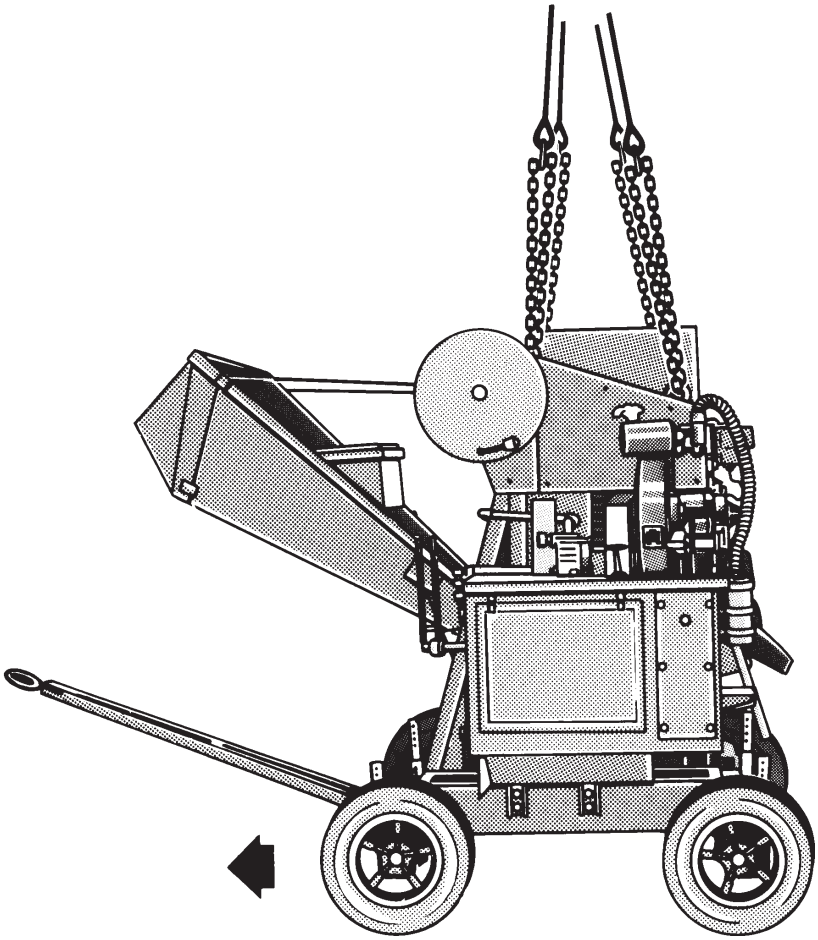

**RIGGING STEPS**

**1.** Position the apex fitting on top of the mixer. Route outer sling legs 1 and 2 to the front of the mixer (towbar end) and inner sling legs 3 and 4 to the rear. Sling legs 1 and 3 must be on the left side of the load.

**2.** Loop the chain end of sling leg 1 through the left front U-bolt lift provision located on the left top side of the mixer. Place the correct link from Table 8-35 in the grab hook. Route the chain from the inboard side of the provision to the outboard side. Repeat with sling leg 2 and the right front lift provision. Secure excess chain with tape or nylon cord.

**3.** Loop the chain end of sling leg 3 through the left rear U-bolt lift provision located on the left top side of the mixer. Place the correct link from Table 8-35 in the grab hook. Route the chain from the inboard side of the provision to the outboard side. Repeat with sling leg 4 and the right rear lift provision. Secure excess chain with tape or nylon cord.

**4.** Cluster and tie or tape (breakaway technique) all sling legs together on top of the mixer to prevent entanglement during hookup and lift-off.

*Figure 8-35. MS114 WFD Concrete Mixer*

## 8-37. Towed Rollers

**a. Applicability.** The following items in Table 8-36 are certified for all helicopters with suitable lift capacity by the US Army Natick Research, Development, and Engineering Center:

**Table 8-36. Towed Rollers**

| NOMENCLATURE | MAX WEIGHT (POUNDS) | SLING SET | LINK COUNT FRONT/REAR | RECOMMENDED AIRSPEED (KNOTS) |
|---|---|---|---|---|
| Roller,Towed, RO3402 | 4,600 | 10K | 3/30 | 120 |
| Roller, Hercules, PT-11 | 3,520 | 10K | 3/3 | 85 |

**b. Materials.** The following materials are required to rig this load:

**(1)** Sling set (10,000-pound capacity).

**(2)** Tape, adhesive, pressure-sensitive, 2-inch wide roll.

**(3)** Cord, nylon, Type III, 550-pound breaking strength.

**(4)** Webbing, cotton, 1/4-inch, 80-pound breaking strength.

**(5)** Tie-down strap, cargo, CGU-1/B (as required).

**c. Personnel.** Two persons can prepare and rig each load in 10 minutes.

**d. Procedures.** The following procedures apply to this load:

**(1) Preparation.** Prepare the load using the following steps:

**(a)** Secure the drain plugs with tape.

**(b)** Raise and secure the tongue with tie-down staps.

**(2) Rigging.** Rig the load according to the steps in Figure 8-36.

**(3) Hookup.** The hookup team stands on top of the roller. The static wand person discharges the static electricity with the static wand. The hookup person places the apex fitting onto the aircraft cargo hook. The hookup team then moves clear of the load but remains close to the load as the helicopter removes slack from the sling legs. When successful hookup is assured, the hookup team quickly exits the area underneath the helicopter to the designated rendezvous point.

**NOTE: Brief the aircrew to hover to one side of the load and relax the sling tension before releasing the apex fitting to prevent damaging the load.**

**(4) Derigging.** Derigging is the reverse of the preparation and rigging procedures in steps d (1) and d (2).

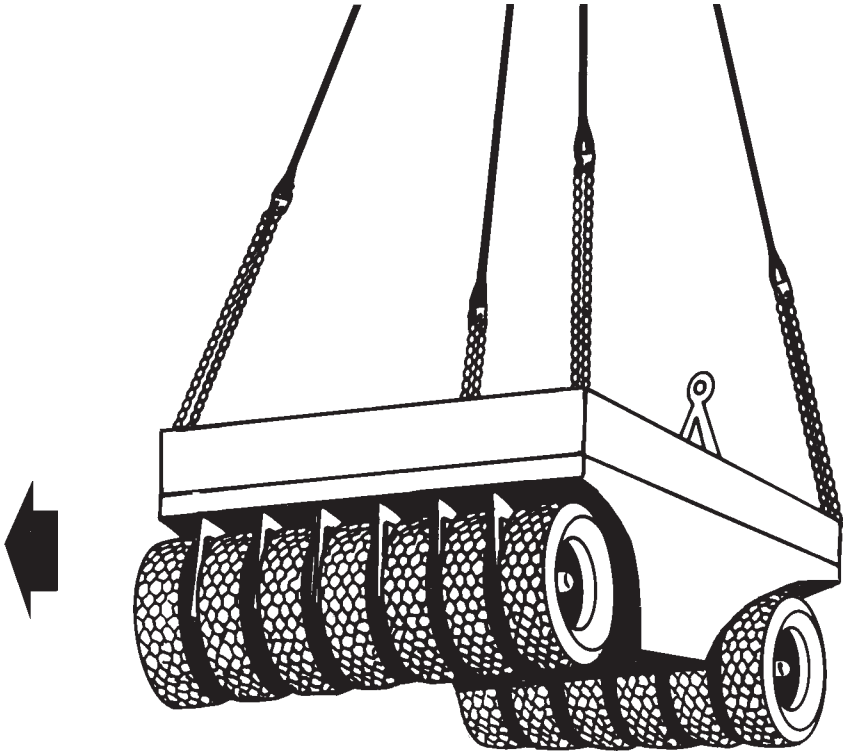

**RIGGING STEPS**

**1.** Position the apex fitting on top of the roller. Route outer sling legs 1 and 2 to the front of the roller (lunette end) and inner sling legs 3 and 4 to the rear. Sling legs 1 and 3 must be on the left side of the load.

**2.** Loop the chain end of sling leg 1 through the left front lift provision located on the left front corner of the roller. Place the correct link from Table 8-36 in the grab hook. Repeat with sling leg 2 and the right front lift provision.

**3.** Loop the chain end of sling leg 3 through the left rear lift provision located on the left rear corner of the roller. Place the correct link from Table 8-36 in the grab hook. Repeat with sling leg 4 and the right rear lift provision.

**4.** Cluster and tie or tape (breakaway technique) all sling legs together on top of the roller to prevent entanglement during hookup and lift-off.

***Figure 8-36. Towed Rollers***

## 8-38. Tractor (Dozer), Full-Tracked, Type III, JD450G

**a. Applicability.** The following items in Table 8-37 are certified for all helicopters with suitable lift capacity by the US Army Soldier Systems Center:

**Table 8-37. Tractor (Dozer), Full-Tracked, Type III, JD450G**

| NOMENCLATURE | MAX WEIGHT (POUNDS) | SLING SET | LINK COUNT FRONT/ REAR | RECOMMENDED AIRSPEED (KNOTS) |
|---|---|---|---|---|
| Tractor (Dozer), Full-Tracked, Type III, JD450G | 18,400 | 25K | 3/10 | 100 |
| Tractor (Dozer), Full-Tracked, Type III, JD450G,without ROPS | 17,700 | 25K | 3/10 | 100 |
| Tractor (Dozer), Full-Tracked, Type III, JD450G,without ROPS and Winch | 16,160 | 25K | 3/10 | 100 |

**b. Materials.** The following materials are required to rig this load:

**(1)** Sling set (25,000-pound capacity).

**(a)** Chain length, part number 38850-00053-102, from a 25,000-pound capacity sling set (4 each).

**(b)** Coupling link, part number 664241, from a 25,000-pound capacity sling set (4 each).

**(2)** Tape, adhesive, pressure-sensitive, 2-inch wide roll.

**(3)** Cord, nylon, Type III, 550-pound breaking strength.

**(4)** Webbing, cotton, 1/4-inch, 80-pound breaking strength.

**(5)** Heavy padding (1/4 section of a steel-belted tire or a length of fire hose or equivalent) (2 each).

**c. Personnel.** Two persons can prepare and rig this load in 15 minutes.

**d. Procedures.** The following procedures apply to this load:

**(1) Preparation.** Prepare the load using the following steps:

**(a)** Connect one additional chain length to each chain on each sling set with a coupling link.

**(b)** Prepare the tractor for mission needs using the operator's manual. Special tools may be required to remove the ROPS or winch.

**(c)** Secure all loose equipment with tape or Type III nylon cord.

**(d)** Place the transmission in neutral and set the parking brake.

**(e)** Tape the front sling guides on the ROPS. Tape all lights and gauges.

**(f)** Ensure the fuel tank is not over 3/4 full. Ensure the fuel tank cap is in the vent position. Inspect the oil filter cap and battery caps for proper installation.

**(2) Rigging.** Rig the load according to the steps in Figure 8-37.

**(3) Hookup.** The hookup team stands on top of the dozer. The static wand person discharges the static elec-

tricity with the static wand. The hookup person places the apex fitting onto the aircraft cargo hook. The hookup team then moves clear of the load but remains close to the load as the helicopter removes slack from the sling legs. When successful hookup is assured, the hookup team quickly exits the area underneath the helicopter to the designated rendezvous point.

**(4) Derigging.** Derigging is the reverse of the preparation and rigging procedures in steps d (1) and d (2).

**NOTES: Padding for the rear chains cannot be added until the chains have been routed through the sling guides and attached to the grabhooks.**

**CAUTION**
**THIS LOAD HAS A TENDENCY TO ROTATE IN FLIGHT. DO NOT ALLOW THE LOAD TO ROTATE MORE THAN TWO COMPLETE TURNS. IF THE LOAD CANNOT BE STABILIZED, IT SHOULD BE LANDED.**

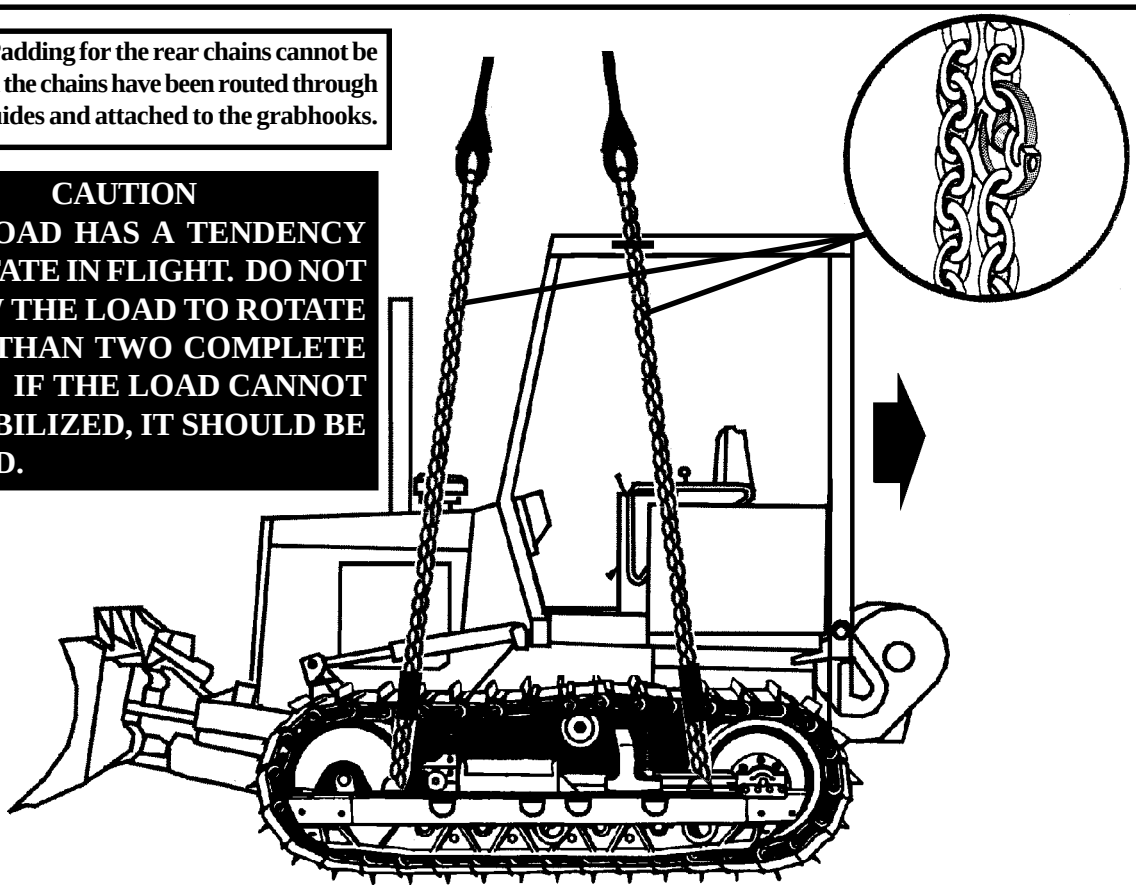

**RIGGING STEPS**

**1.** Position the apex fitting on top of the ROPS. Route outer sling legs 1and 2 to the front of the load. Route inner sling legs 3 and 4 to the rear of the load. Sling legs 1 and 3 must be on the left side of the load.

**2.** Route the chain end of sling leg 1 through the left front lift provision. Place the correct link from Table 8-37 in the grab hook. Repeat with sling leg 2 and the right front lift provision.

**3.** Route the chain end of sling leg 3 through the left front sling guide on the ROPS, down through the left rear lift provision, and back through the same sling guide. Place the correct link from Table 8-37 in the grab hook. Repeat with sling leg 4 on the right rear lift provision. Secure the excess chain with tape or Type III nylon cord.

**4.** Heavy pad the sling legs where they make contact with the tracks.

**5.** Cluster and tie or tape (breakaway technique) the sling legs together on top of the ROPS to prevent entanglement during hookup and lift-off.

*Figure 8-37. Tractor (Dozer), Full-Tracked, Type III, JD450G*

## 8-39. Vibrating Roller, Caterpillar, RO-33

**a. Applicability.** The following item in Table 8-38 is certified for all helicopters with suitable lift capacity by the US Army Soldier Systems Center:

**Table 8-38. Vibrating Roller, Caterpillar, RO-33**

| NOMENCLATURE | MAX WEIGHT (POUNDS) | SLING SET | LINK COUNT FRONT/REAR | RECOMMENDED AIRSPEED (KNOTS) |
|---|---|---|---|---|
| Vibrating Roller, Caterpillar, RO-33 | 16,425 | 25K | 30/3 | 120 |

**b. Materials.** The following materials are required to rig this load:

**(1)** Sling set (25,000-pound capacity).

**(2)** Tape, adhesive, pressure-sensitive, 2-inch wide roll.

**(3)** Cord, nylon, Type III, 550-pound breaking strength.

**(4)** Webbing, cotton, 1/4-inch, 80-pound breaking strength.

**(5)** Lumber, 2-inch x 4-inch (as required).

**(6)** Felt sheet, cattle hair, Type IV, 1/2-inch or suitable padding.

**c. Personnel.** Two persons can prepare and rig this load in 15 minutes.

**d. Procedures.** The following procedures apply to this load:

**(1) Preparation.** Prepare the load using the following steps:

**(a)** Place the transmission in neutral and set the parking brake.

**(b)** Ensure the fuel tank is not over 3/4 full. Ensure the fuel tank cap is in the vent position. Inspect the oil filter cap and battery caps for proper installation.

**(c)** Secure the seat cushion to the frame with tape or Type III nylon cord.

**(d)** Remove and secure the exhaust stack.

**(e)** Tape all lights and gauges. Secure all loose covers and panels with tape or Type III nylon cord.

**(f)** Tie down the steering wheel with Type III nylon cord.

**(g)** Place the wooden block in the pivot point at the center of the roller to prevent the two halves from flexing during flight.

**(2) Rigging.** Rig the load according to the steps in Figure 8-38.

**(3) Hookup.** The hookup team stands on top of the roller. The static wand person discharges the static electricity with the static wand. The hookup person places the apex fitting onto the aircraft cargo hook. The hookup team then moves clear of the load but remains close to the load as the helicopter removes slack from the sling legs. When successful hookup is assured, the hookup team quickly exits the area underneath the helicopter to thedesignated rendezvous point.

**(4) Derigging.** Derigging is the reverse of the preparation and rigging procedures in steps d (1) and d (2).

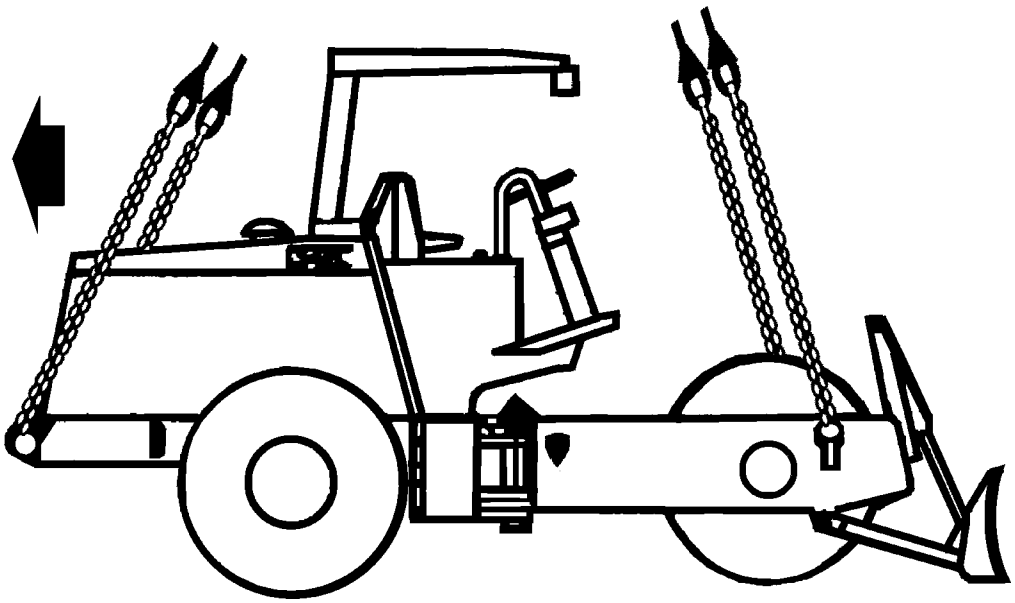

**RIGGING STEPS**

**1.** Position the apex fitting near the roller. Route outer sling legs 1and 2 to the front of the load (roller end). Route inner sling legs 3 and 4 to the rear of the load (engine end). Sling legs 1 and 3 must be on the left side of the load.

**2.** Route the chain end of sling leg 1 through the left front lift provision. Place the correct link from Table 8-38 in the grab hook. Repeat with sling leg 2 and the right front lift provision. Secure the excess chain with tape or Type III nylon cord.

**3.** Route the chain end of sling leg 3 through the left rear lift provision. Place the correct link from Table 8-38 in the grab hook. Repeat with sling leg 4 on the right rear lift provision.

**4.** Pad the sling legs/chains in the area where they make contact with the vehicle.

**5.** Cluster and tie or tape (breakaway technique) the sling legs together on top of the roller to prevent entanglement during hookup and lift-off.

*Figure 8-38. Vibrating Roller, Caterpillar, RO-33*

## 8-40. Countermine Mini-Flail

**a. Applicability.** The following item in Table 8-39 is certified for all helicopters with suitable lift capacity by the US Army Soldier Systems Center:

**Table 8-39. Countermine Mini-Flail**

| NOMENCLATURE | MAX WEIGHT (POUNDS) | SLING SET | LINK COUNT FRONT/REAR | RECOMMENDED AIRSPEED (KNOTS) |
|---|---|---|---|---|
| Countermine Mini-Flail | 2,420 | 10K | 35/3 | 100 |

**b. Materials.** The following materials are required to rig this load:

**(1)** Sling set (10,000-pound capacity).

**(2)** Tape, adhesive, pressure-sensitive, 2-inch wide roll.

**(3)** Cord, nylon, Type III, 550-pound breaking strength.

**(4)** Webbing, cotton, 1/4-inch, 80-pound breaking strength.

**(5)** Felt sheet, cattle hair, Type IV, 1/2-inch or suitable padding.

**c. Personnel.** Two persons can prepare and rig this load in 10 minutes.

**d. Procedures.** The following procedures apply to this load:

**(1) Preparation.** Prepare the load using the following steps:

**(a)** Tape the flail headspring mechanism to the lift/tie crossmember.

**(b)** Ensure the engine compartment door securing pin is present and safety the pin with tape.

**(c)** Secure loose cables, safety cables, and safety chains with tape or Type III nylon cord.

**(d)** Engage the brakes.

**(2) Rigging.** Rig the load according to the steps in Figure 8-39.

**(3) Hookup.** The hookup team stands beside the mini-flail. The static wand person discharges the static electricity with the static wand. The hookup person places the apex fitting onto the aircraft cargo hook. The hookup team then moves clear of the load but remains close to the load as the helicopter removes slack from the sling legs. When successful hookup is assured, the hookup team quickly exits the area underneath the helicopter to thedesignated rendezvous point.

**(4) Derigging.** Derigging is the reverse of the preparation and rigging procedures in steps d (1) and d (2).

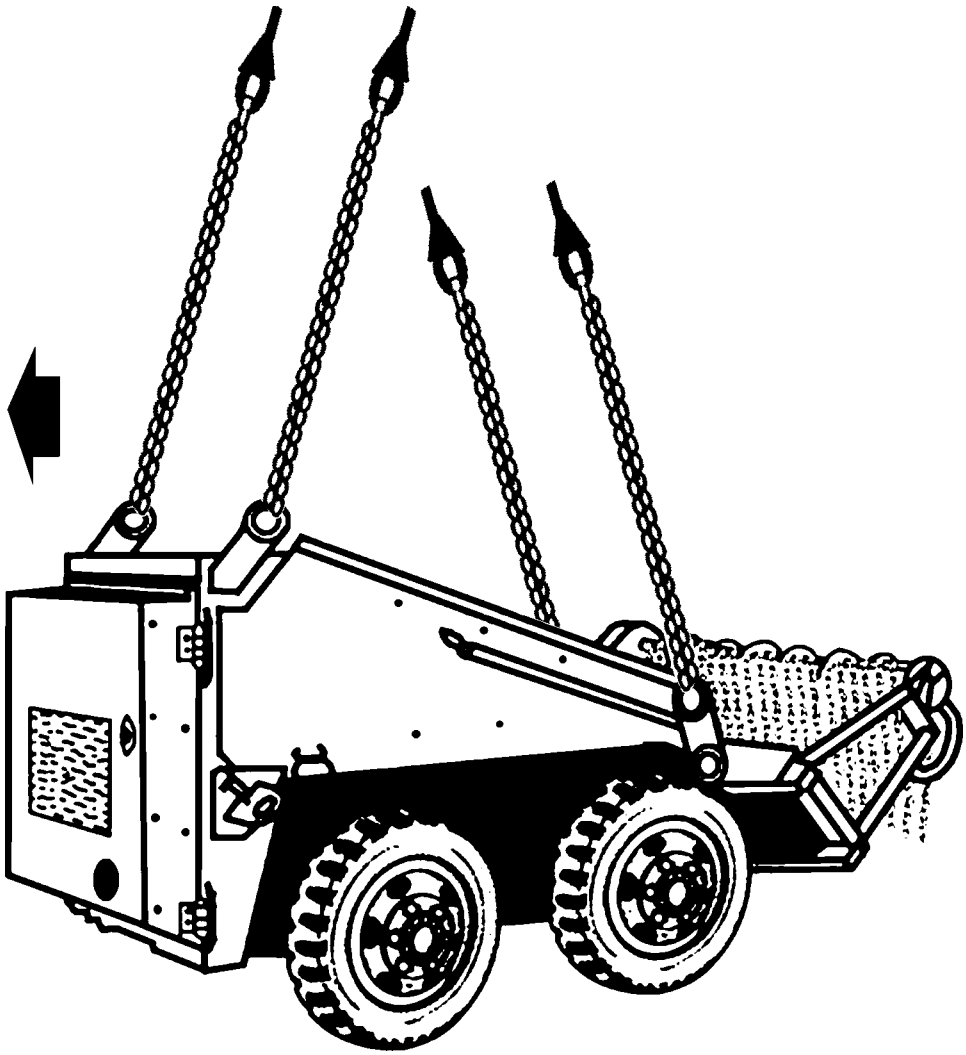

**RIGGING STEPS**

**1.** Position the apex fitting near the mini-flail. Route outer sling legs 1and 2 to the front of the load (engine end). Route inner sling legs 3 and 4 to the rear of the load (flail head). Sling legs 1 and 3 must be on the left side of the load.

**2.** Route the chain end of sling leg 1 through the left front lift provision (engine end). Place the correct link from Table 8-39 in the grab hook. Repeat with sling leg 2 and the right front lift provision. Secure the excess chain with tape or Type III nylon cord.

**3.** Route the chain end of sling leg 3 through the left rear lift provision (flail head end). Place the correct link from Table 8-39 in the grab hook. Repeat with sling leg 4 on the right rear lift provision.

**4.** Pad the sling legs/chains in the area where they make contact with the vehicle.

**5.** Cluster and tie or tape (breakaway technique) the sling legs together on top of the vehicle to prevent entanglement during hookup and lift-off.

***Figure 8-39. Countermine Mini-Flail***

# CHAPTER 9

# CERTIFIED SINGLE-POINT RIGGING PROCEDURES FOR LIQUID CONTAINERS

## 9-1. INTRODUCTION

This chapter contains rigging procedures for single-point lift of liquid containers that have been certified for sling load. Each rigging procedure is found in a paragraph that includes a description of the load, materials required for rigging, and steps to complete the procedure. An applicability paragraph is also a part of each paragraph and identifies the certified loads. The certified single-point rigging procedures for liquid containers are in this section. Paragraphs 9-2 through 9-6 give detailed instructions for rigging loads.

**NOTE: Reach Pendants may be used on all single point loads. A static discharge person is not required when using a Reach Pendant.**

## 9-2. Lightweight Collapsible Fabric Tank

**a. Applicability.** The following item in Table 9-1 is certified for all helicopters with suitable lift capacity by the US Army Natick Research, Development, and Engineering Center:

**Table 9-1. Lightweight Collapsible Fabric Tank**

| NOMENCLATURE | MAX WEIGHT (POUNDS) | SLING SET | LINK COUNT FRONT/REAR | RECOMMENDED AIRSPEED (KNOTS) |
|---|---|---|---|---|
| Tank, Fabric, Lightweight Collapsible, 160 gallon | 1,400 | 5,000-pound capacity net | N/A | N/A |

**b. Materials.** The following materials are required to rig this load:

**(1)** Net, cargo (5,000-pound capacity).

**(2)** Tape, adhesive, pressure-sensitive, 2-inch wide roll.

**(3)** Cord, nylon, Type III, 550-pound breaking strength.

**(4)** Webbing, cotton, 1/4-inch, 80-pound breaking strength.

**c. Personnel.** Two persons can prepare and rig this load in 15 minutes.

**d. Procedures.** The following procedures apply to this load:

**(1) Preparation.** Prepare the load using the following steps:

**(a)** Inspect the net in accordance with the inspection procedures in FM 10-450-3.

**(b)** Ensure all sharp edges on the tank are protected.

**(2) Rigging.** Rig the load according to the steps in Figure 9-1.

**(3) Hookup.** The hookup team stands alongside the load. The static wand person discharges the static electricity with the static wand. The hookup person places the apex fitting onto the aircraft cargo hook. The hookup team then moves clear of the load but remains close to the load as the helicopter removes slack from the sling legs. When successful hookup is assured, the hookup team quickly exits the area underneath the helicopter to the designated rendezvous point.

**(4) Derigging.** Derigging is the reverse of the preparation and rigging procedures in steps d (1) and d (2).

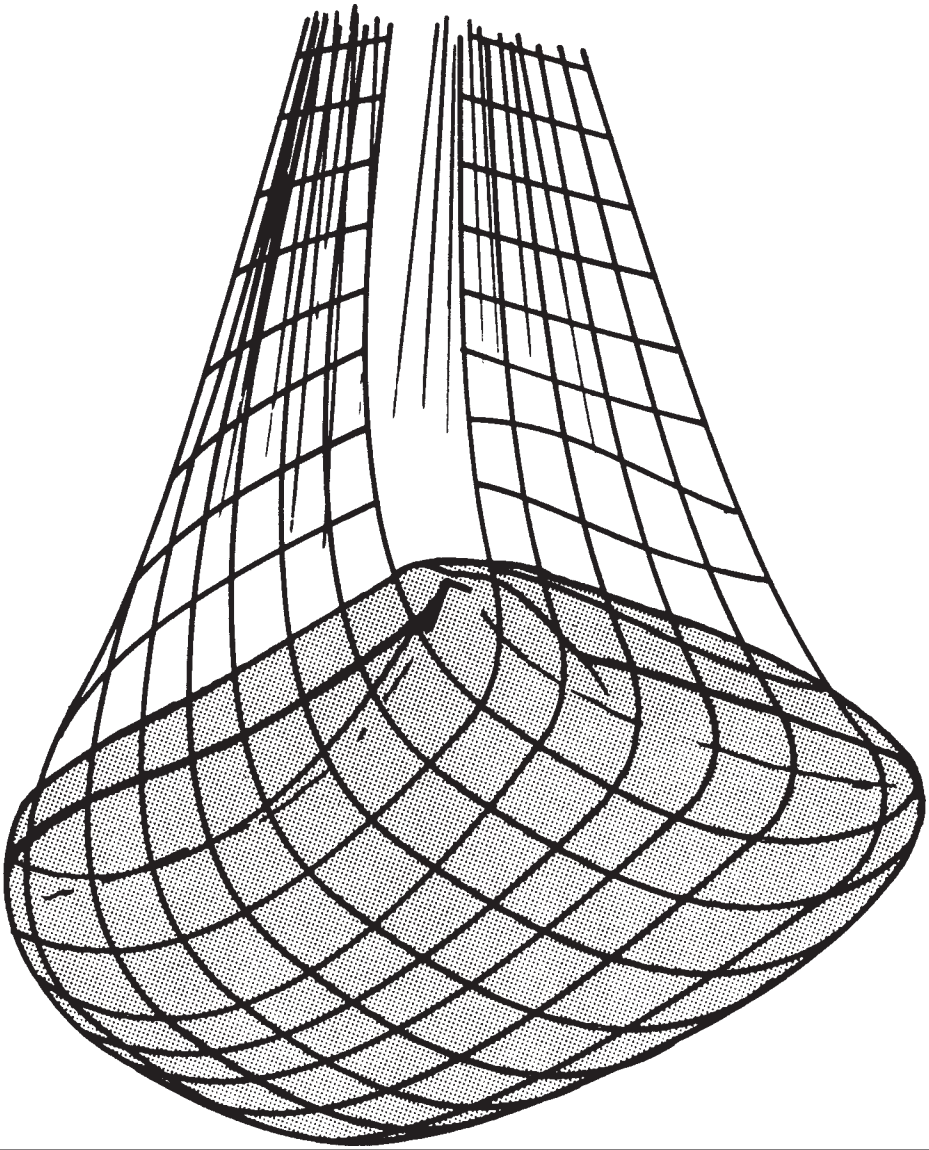

**RIGGING STEPS**

**1.** Spread the cargo net and position the tank in the center of the net.

**2.** Rig and close the net in accordance with the procedures in FM 10-450-3.

***Figure 9-1. Lightweight Collapsible Fabric Tank***

## 9-3. One to Four 500-Gallon Fuel Drums

**a. Applicability.** The following items in Table 9-2 are certified for all helicopters with suitable lift capacity by the US Army Natick Research, Development, and Engineering Center:

**Table 9-2. One to Four 500-Gallon Fuel Drums**

| NOMENCLATURE | MAX WEIGHT (POUNDS) | SLING SET | LINK COUNT FRONT/REAR | RECOMMENDED AIRSPEED (KNOTS) |
|---|---|---|---|---|
| Drum, Fabric, Fuel, 500-gallon (1 each) | 4,200 | 10K | 3/3 | 80 |
| Drum, Fabric, Fuel, 500-gallon (2 each) | 8,400 | 10K | 3/3 | 80 |
| Drum, Fabric, Fuel, 500-gallon (3 each) | 12,600 | 25K | 3/55 | 80 |
| Drum, Fabric, Fuel, 500-gallon (4 each) | 16,800 | 25K | 3/3 | 80 |

**b. Materials.** The following materials are required to rig this load:

**(1)** Sling set (10,000 or 25,000-pound capacity).

**(2)** Tape, adhesive, pressure-sensitive, 2-inch wide roll.

**(3)** Cord, nylon, Type III, 550-pound breaking strength.

**(4)** Webbing, cotton, 1/4-inch, 80-pound breaking strength.

**c. Personnel.** Two persons can prepare and rig this load in 5 to 15 minutes.

**d. Procedures.** The following procedures apply to this load:

**(1) Preparation.** Prepare the load using the following steps:

**(a)** Align the drums side by side in a row.

**(b)** Ensure the lifting clevises are serviceable.

**(c)** Rotate the drum hub so a clevis is in the top position.

**(2) Rigging.** Rig the load according to the steps in Figure 9-2.

**(3) Hookup.** The hookup team stands alongside the load. The static wand person discharges the static electricity with the static wand. The hookup person places the apex fitting onto the aircraft cargo hook. The hookup team then moves clear of the load but remains close to the load as the helicopter removes slack from the sling legs. When successful hookup is assured, the hookup team quickly exits the area underneath the helicopter to the designated rendezvous point.

**(4) Derigging.** Derigging is the reverse of the preparation and rigging procedures in steps d (1) and d (2).

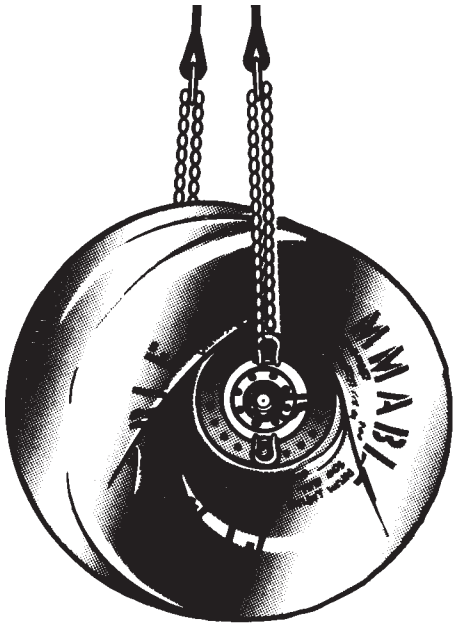

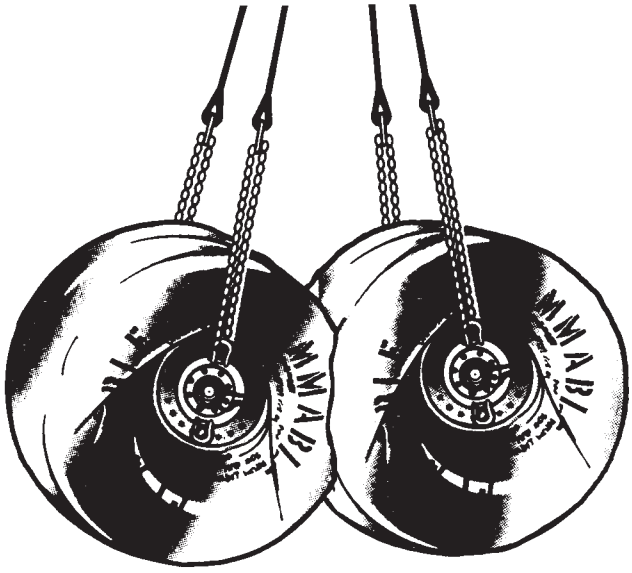

TWO FUEL DRUMS RIGGED
WITH 10,000-POUND SLING SET

**RIGGING STEPS (ONE DRUM)**

**1.** Position apex fitting on top of the drum. Route one outer and one inner sling legs 1 and 3 to the the left side of the drum and the other two sling legs 2 and 4 to the right side.

**2.** Loop the chain end of sling legs 1 and 3 through the left clevis. Place the correct link from Table 9-2 in the grab hook. Repeat with sling legs 2 and 4 through the right clevis.

**NOTE: One drum can be rigged with a two-legged sling set using sling legs 1 and 2.**

**3.** Cluster and tie or tape (breakaway technique) all sling legs together to prevent entanglement during hookup and lift-off.

**RIGGING STEPS (TWO DRUMS)**

**1.** Position apex fitting on top of the two drums. Route outer sling legs 1 and 2 to one drum and inner sling legs 3 and 4 to the other drum. Sling legs 1 and 3 should be on the same side of the two drums.

**2.** Loop the chain end of sling legs 1 through the left clevis. Place the correct link from Table 9-2 in the grab hook. Repeat with sling leg 2 through the right clevis.

**3.** Loop the chain end of sling legs 3 through the left clevis of the other drum. Place the correct link from Table 9-2 in the grab hook. Repeat with sling leg 4 through the right clevis.

**4.** Cluster and tie or tape (breakaway technique) all sling legs together to prevent entanglement during hookup and lift-off.

*Figure 9-2. One to Four 500-Gallon Fuel Drums*

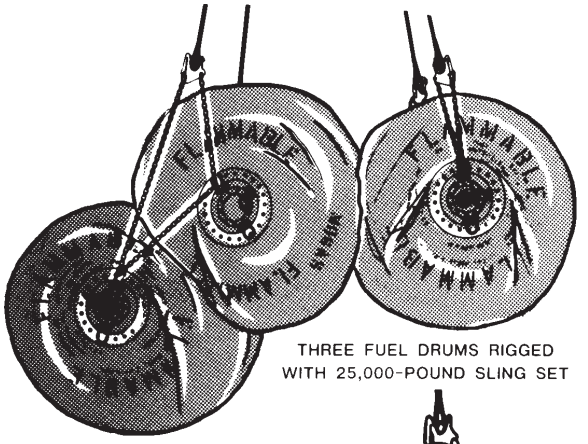


THREE FUEL DRUMS RIGGED
WITH 25,000-POUND SLING SET

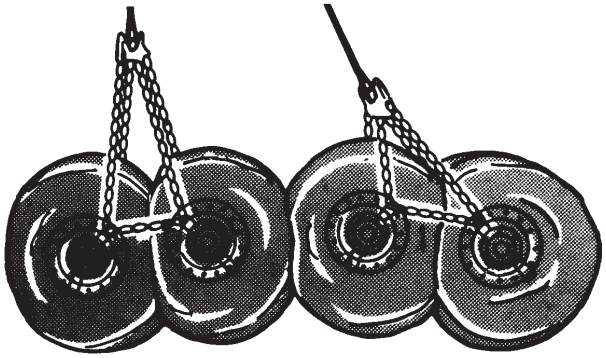

FOUR FUEL DRUMS RIGGED
WITH 25,000-POUND SLING SET

| RIGGING STEPS (THREE DRUMS) | RIGGING STEPS (FOUR DRUMS) |
|---|---|
| **1.** Position apex fitting on top of the center drum. Route outer sling legs 1 and 2 to the middle drum and inner sling legs 3 and 4 to an outer drum. Sling legs 1 and 3 should be on the same side of the three drums. | **1.** Position the apex fitting on the top of the drums. route outer sling legs 1 and 2 to two drums and inner sling legs 3 and 4 to the other two drums. Sling legs 1 and 3 should be on the same side of the load. |
| **2.** Loop the chain end of sling leg 1 through the clevis on the left hub of the middle drum, through the clevis on the left side of one of the outer drums. Place the correct link from Table 9-2 in the grab hook. Repeat with sling leg 2 through the clevises on the right side of the two drums. | **2.** Loop the chain end of sling leg 1 through the clevis on the left hub of one drum, over and through the clevis of the second drum. Place the correct link from Table 9-2 in the grab hook. Repeat with sling leg 2 through the other side of the the two drums. |
| **3.** Loop the chain end of sling leg 3 through the clevis on the left hub of the outer drum not yet connected. Place the correct link from Table 9-2 in the grab hook. Repeat with sling leg 4 through the right side of the drum. | **3.** Loop the chain end of sling leg 3 through the clevis on the left hub of one of the other drums, over and through the clevis of the second drum. Place the correct link from Table 9-2 in the grab hook. Repeat with sling leg 4 through the other side of the two drums. |
| **4.** Cluster and tie or tape (breakaway technique) all sling legs together to prevent entanglement during hookup and lift-off. | **4.** Cluster and tie or tape (breakaway technique) all sling legs together to prevent entanglement during hookup and lift-off. |

*Figure 9-2. One to Four 500-Gallon Fuel Drums (continued)*

## 9-4. Six 500-Gallon Fuel Drums, Empty

**a. Applicability.** The following item in Table 9-3 is certified for all helicopters with suitable lift capacity by the US Army Natick Research, Development, and Engineering Center:

**CAUTION**
**One to five empty fuel drums are not a stable load and are not certified for sling loading. One to five empty fuel drums may cause damage to the aircraft and endanger the aircrew due to violent oscillations and inherent instability.**

**Table 9-3. Six 500-Gallon Fuel Drums, Empty**

| NOMENCLATURE | MAX WEIGHT (POUNDS) | SLING SET | LINK COUNT FRONT/REAR | RECOMMENDED AIRSPEED (KNOTS) |
|---|---|---|---|---|
| Drum, Fabric, Fuel, 500-gallon, Empty (6 each) | 4,500 | 10K | 3/3/14 | 90 |

**b. Materials.** The following materials are required to rig this load:

**(1)** Sling set (10,000-pound capacity), with two additional sling leg assemblies.

**(2)** Tape, adhesive, pressure-sensitive, 2-inch wide roll.

**(3)** Webbing, tubular, nylon, 1/2-inch.

**(4)** Cord, nylon, Type III, 550-pound breaking strength.

**(5)** Webbing, cotton, 1/4-inch, 80-pound breaking strength.

**c. Personnel.** Four persons can prepare and rig this load in 20 minutes.

**d. Procedures.** The following procedures apply to this load:

**(1) Preparation.** Prepare the load using the following steps:

**(a)** Align the drums side by side in a row.

**(b)** Ensure the lifting clevises are serviceable and secure.

**(c)** Rotate the drum hub so a clevis is in the top position.

**(d)** Assemble a six-leg sling set in accordance with the procedures in FM 10-450-3.

**(2) Rigging.** Rig the load according to the steps in Figure 9-3.

**(3) Hookup.** The hookup team stands alongside the load. The static wand person discharges the static electricity with the static wand. The hookup person places the apex fitting onto the aircraft cargo hook. The hookup team then moves clear of the load but remains close to the load as the helicopter removes slack from the sling legs. When successful hookup is assured, the hookup team quickly exits the area underneath the helicopter to the designated rendezvous point.

**(4) Derigging.** Derigging is the reverse of the preparation and rigging procedures in steps d (1) and d (2).

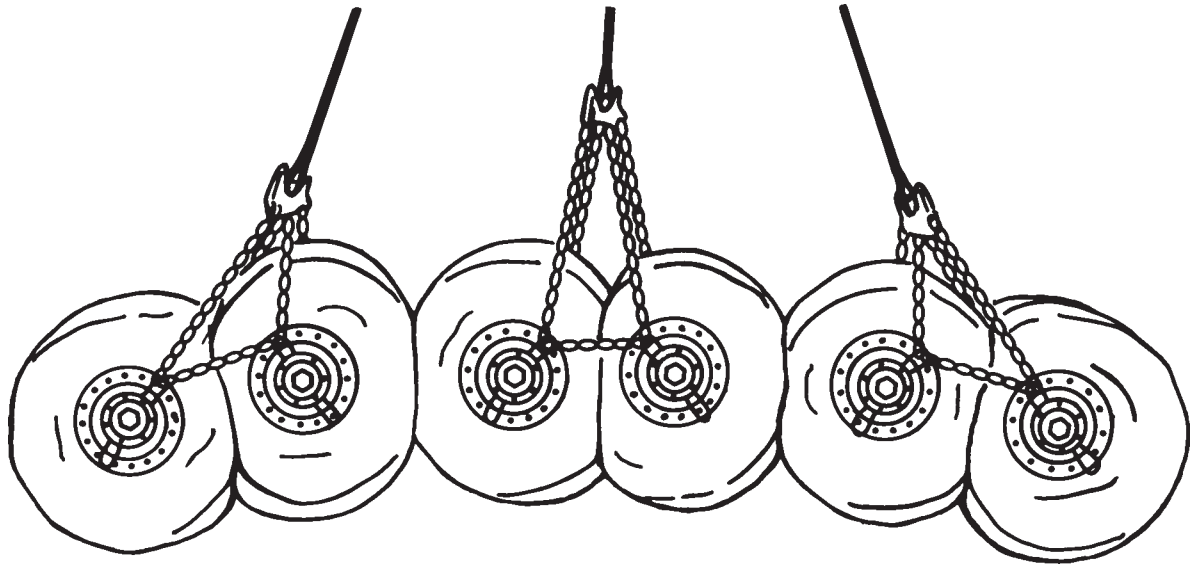

**RIGGING STEPS**

**1.** Route outer sling legs 1 and 2 to the forward outer drum, middle sling legs 3 and 4 to the rearward outer drum, and inner sling legs 5 and 6 to the two center drums.

**2.** Loop the chain end of sling leg 1 through the left clevis on the outer drum and through the left clevis of the next inner drum. Place the correct link from Table 9-3 in the grab hook. Repeat with sling leg 2 on the right side of the two drums.

**3.** Loop the chain end of sling leg 3 through the left clevis on the other outer drum and through the left clevis of the next inner drum. Place the correct link from Table 9-3 in the grab hook. Repeat with sling leg 4 on the right side of the two drums.

**4.** Loop the chain end of sling leg 5 through the left clevis on the two center drums. Place the correct link from Table 9-3 in the grab hook. Repeat with sling leg 6 on the right side of the two center drums. Secure excess chain with wide tape or nylon cord.

**5.** Sling legs 1, 3, and 5 should be on the left side of the load.

**NOTE: At this point, you have effectively rigged three individual, 2-leg sling loads under one apex fitting. Now you must unite the three pairs of drums.**

**6.** Loop a length of tubular nylon through the clevis assemblies on each side of the load. Tighten as securely as possible.

**7.** Cluster and tie or tape (breakaway technique) all sling legs together to prevent entanglement during hookup and lift-off.

*Figure 9-3. Six 500-Gallon Fuel Drums, Empty*

## 9-5. Storage Module, Fuel/Water, Six Compartment Container (SIXCON), Individual

**a. Applicability.** The following item in Table 9-4 is certified for all helicopters with suitable lift capacity by the US Army Natick Research, Development, and Engineering Center:

**NOTE: This load is certified at the FULL weight only.**

**Table 9-4. Storage Module, Fuel/Water, Six Compartment Container (SIXCON), Individual**

| NOMENCLATURE | MAX WEIGHT (POUNDS) | SLING SET | LINK COUNT FRONT/REAR | RECOMMENDED AIRSPEED (KNOTS) |
|---|---|---|---|---|
| Storage Module, Fuel/Water, Six Compartment Container (SIXCON), Individual | 10,000 | 15K | 3/3 | 100 |

**b. Materials.** The following materials are required to rig this load:

**(1)** Sling set (15,000-pound capacity).

**(2)** Tape, adhesive, pressure-sensitive, 2-inch wide roll.

**(3)** Cord, nylon, Type III, 550-pound breaking strength.

**(4)** Webbing, cotton, 1/4-inch, 80-pound breaking strength.

**c. Personnel.** Four persons can prepare and rig this load in 5 minutes.

**d. Procedures.** The following procedures apply to this load:

**(1) Preparation.** Prepare the load using the following steps:

**(a)** Ensure the storage tank is completely full.

**(b)** Secure all hatches, hoses, valves, and loose equipment.

**(2) Rigging.** Rig the load according to the steps in Figure 9-4.

**(3) Hookup.** The hookup team stands on top of the SIXCON. The static wand person discharges the static electricity with the static wand. The hookup person places the apex fitting onto the aircraft cargo hook. The hookup team then moves clear of the load but remains close to the load as the helicopter removes slack from the sling legs. When successful hookup is assured, the hookup team quickly exits the area underneath the helicopter to the designated rendezvous point.

**(4) Derigging.** Derigging is the reverse of the preparation and rigging procedures in steps d (1) and d (2).

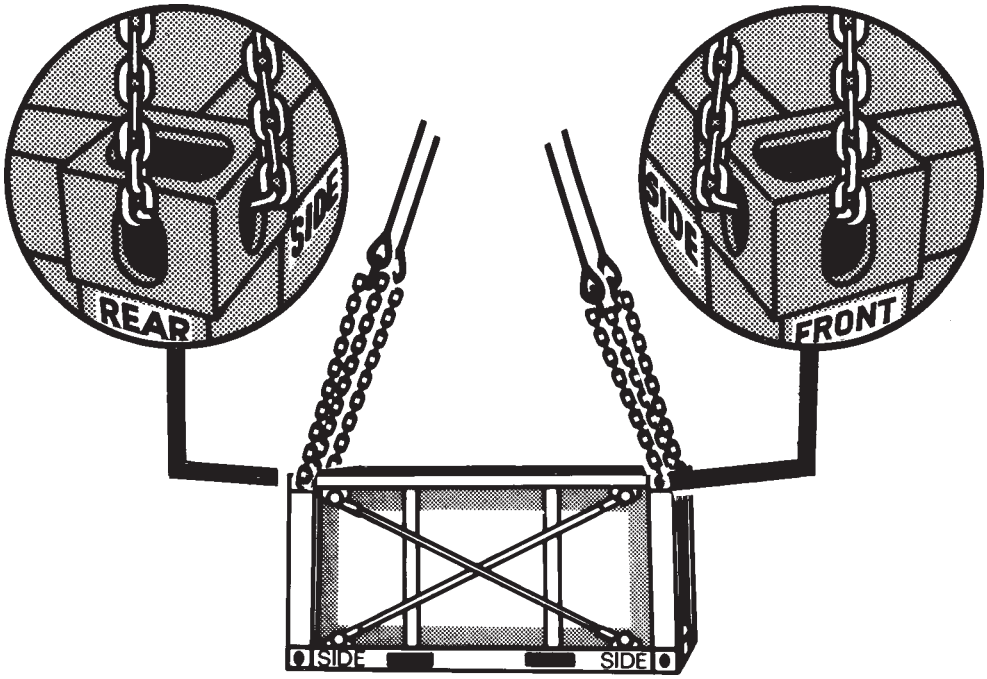


**RIGGING STEPS**

**1.** Position apex fitting on top of the SIXCON. Route outer sling legs 1 and 2 to one end of the SIXCON and inner sling legs 3 and 4 to the other end. Sling legs 1 and 3 must be on the left side of the load.

**2.** Loop the chain end of sling leg 1 through the opening on the side of the left front corner international organization of standardization (ISO) lift provision and out through the front opening. Place the correct link from Table 9-4 in the grab hook. Repeat with sling leg 2 and the right front corner ISO lift provision.

**3.** Loop the chain end of sling leg 3 through the opening on the side of the left rear corner ISO lift provision and out through the rear opening. Place the correct link from Table 9-4 in the grab hook. Repeat with sling leg 4 and the right rear corner ISO lift provision.

**4.** Cluster and tie or tape (breakaway technique) all sling legs together on top of the SIXCON to prevent entanglement during hookup and lift-off.

***Figure 9-4. Storage Module, Fuel/Water, Six Compartment Container (SIXCON), Individual***

## 9-6. Two Storage Modules, Fuel/Water, Six Compartment Container (SIXCON), (Stacked)

**a. Applicability.** The following item in Table 9-5 is certified for all helicopters with suitable lift capacity by the US Army Natick Research, Development, and Engineering Center:

**NOTE: This load is certified at the FULL weight only.**

**Table 9-5. Two Storage Modules, Fuel/Water, Six Compartment Container (SIXCON), (Stacked)**

| NOMENCLATURE | MAX WEIGHT (POUNDS) | SLING SET | LINK COUNT FRONT/REAR | RECOMMENDED AIRSPEED (KNOTS) |
|---|---|---|---|---|
| 2 Storage Modules, Fuel/Water, Six Compartment Container (SIXCON), Stacked | 20,100 | 40K | 3/3 | 110 |

**b. Materials.** The following materials are required to rig this load:

**(1)** Sling set (40,000-pound capacity).

**(2)** Tape, adhesive, pressure-sensitive, 2-inch wide roll.

**(3)** Cord, nylon, Type III, 550-pound breaking strength.

**(4)** Webbing, cotton, 1/4-inch, 80-pound breaking strength.

**c. Personnel.** Four persons can prepare and rig this load in 15 minutes.

**d. Procedures.** The following procedures apply to this load:

**(1) Preparation.** Prepare the load using the following steps:

**(a)** Position the two SIXCONs on top of each other. Ensure the ISO vertical corner connectors are properly secured.

**(b)** Tape the pins in the ISO vertical corner connectors.

**(c)** Ensure the storage tanks are completely full.

**(d)** Secure all hatches, hoses, valves, and loose gear.

**(2) Rigging.** Rig the load according to the steps in Figure 9-5.

**(3) Hookup.** The hookup team stands on top of the SIXCONs. The static wand person discharges the static electricity with the static wand. The hookup person places the apex fitting onto the aircraft cargo hook. The hookup team then moves clear of the load but remains close to the load as the helicopter removes slack from the sling legs. When successful hookup is assured, the hookup team quickly exits the area underneath the helicopter to the designated rendezvous point.

**(4) Derigging.** Derigging is the reverse of the preparation and rigging procedures in steps d (1) and d (2).

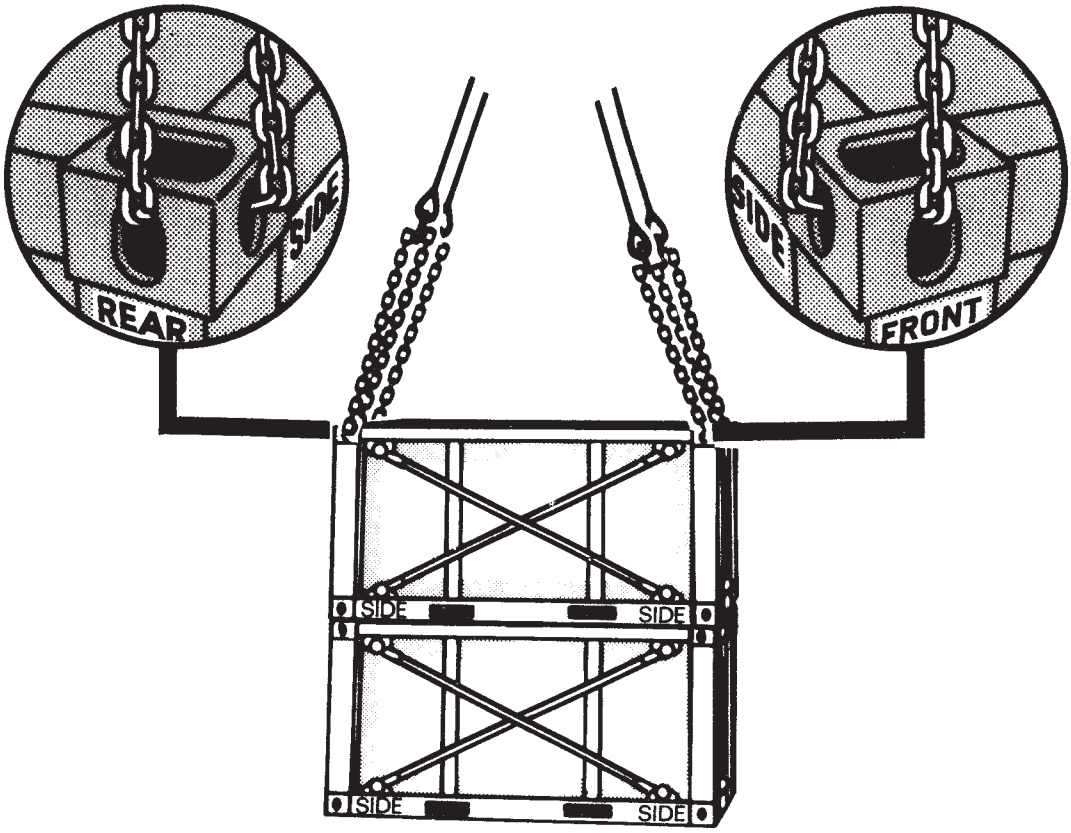


**RIGGING STEPS**

**1.** Position apex fitting on top of the SIXCONS. Route outer sling legs 1 and 2 to one end of the top SIXCON and inner sling legs 3 and 4 to the other end. Sling legs 1 and 3 must be on the left side of the load.

**2.** Loop the chain end of sling leg 1 through the opening on the side of the left front ISO lift provision and out through the front opening. Place the correct link from Table 9-5 in the grab hook. Repeat with sling leg 4 and the right front ISO lift provision.

**3.** Loop the chain end of sling leg 3 through the opening on the side of the left rear corner ISO lift provision and out through the rear opening. Place the correct link from Table 9-5 in the grab hook. Repeat with sling leg 4 and the right rear corner ISO lift provision.

**4.** Cluster and tie or tape (breakaway technique) all sling legs together on top of the SIXCON to prevent entanglement during hookup and lift-off.

*Figure 9-5. Two Storage Modules, Fuel/Water, Six Compartment Container (SIXCON), (Stacked)*

# CHAPTER 10

# CERTIFIED SINGLE-POINT RIGGING PROCEDURES FOR SHELTERS

## 10-1. INTRODUCTION

This chapter contains rigging procedures for single-point lift of shelters that have been certified for sling load. Each rigging procedure is found in a paragraph that includes a description of the load, materials required for rigging, and steps to complete the procedure. An applicability paragraph is also a part of each paragraph and identifies the certified loads. The certified single-point rigging procedures for shelters are in this section. Paragraphs 10-2 through 10-13 give detailed instructions for rigging loads.

**NOTE: Reach Pendants may be used on all single point loads. A static discharge person is not required when using a Reach Pendant.**

## 10-2. AN/ASM-146 or AN/MSM-108 Electronic Shops

**a. Applicability.** The following items in Table 10-1 are certified for all helicopters with suitable lift capacity by the US Army Natick Research, Development, and Engineering Center:

**Table 10-1. Electronic Shops**

| NOMENCLATURE | MAX WEIGHT (POUNDS) | SLING SET | LINK COUNT FRONT/REAR | RECOMMENDED AIRSPEED (KNOTS) |
|---|---|---|---|---|
| AN/ASM-146 | 3,940 | 10K | 3/3 | 80 |
| AN/MSM-108 | 3,940 | 10K | 3/3 | 80 |

**b. Materials.** The following materials are required to rig this load:

**(1)** Sling set (10,000-pound capacity).

**(2)** Tape, adhesive, pressure-sensitive, 2-inch wide roll.

**(3)** Cord, nylon, Type III, 550-pound breaking strength.

**(4)** Webbing, cotton, 1/4-inch, 80-pound breaking strength.

**c. Personnel.** Two persons can prepare and rig this load in 20 minutes.

**d. Procedures.** The following procedures apply to this load:

**(1) Preparation.** Prepare the load using the following steps:

**(a)** Close and secure all doors, vents, caps, and engage the brakes.

**(b)** Secure the tongue in the up position with the safety chains.

**(2) Rigging.** Rig the load according to the steps in Figure 10-1.

**(3) Hookup.** The hookup team stands on top of the shelter. The static wand person discharges the static electricity with the static wand. The hookup person places the apex fitting onto the aircraft cargo hook. The hookup team then moves clear of the load but remains close to the load as the helicopter removes slack from the sling legs. When successful hookup is assured, the hookup team quickly exits the area underneath the helicopter to the designated rendezvous point.

**(4) Derigging.** Derigging is the reverse of the preparation and rigging procedures in steps d (1) and d (2).

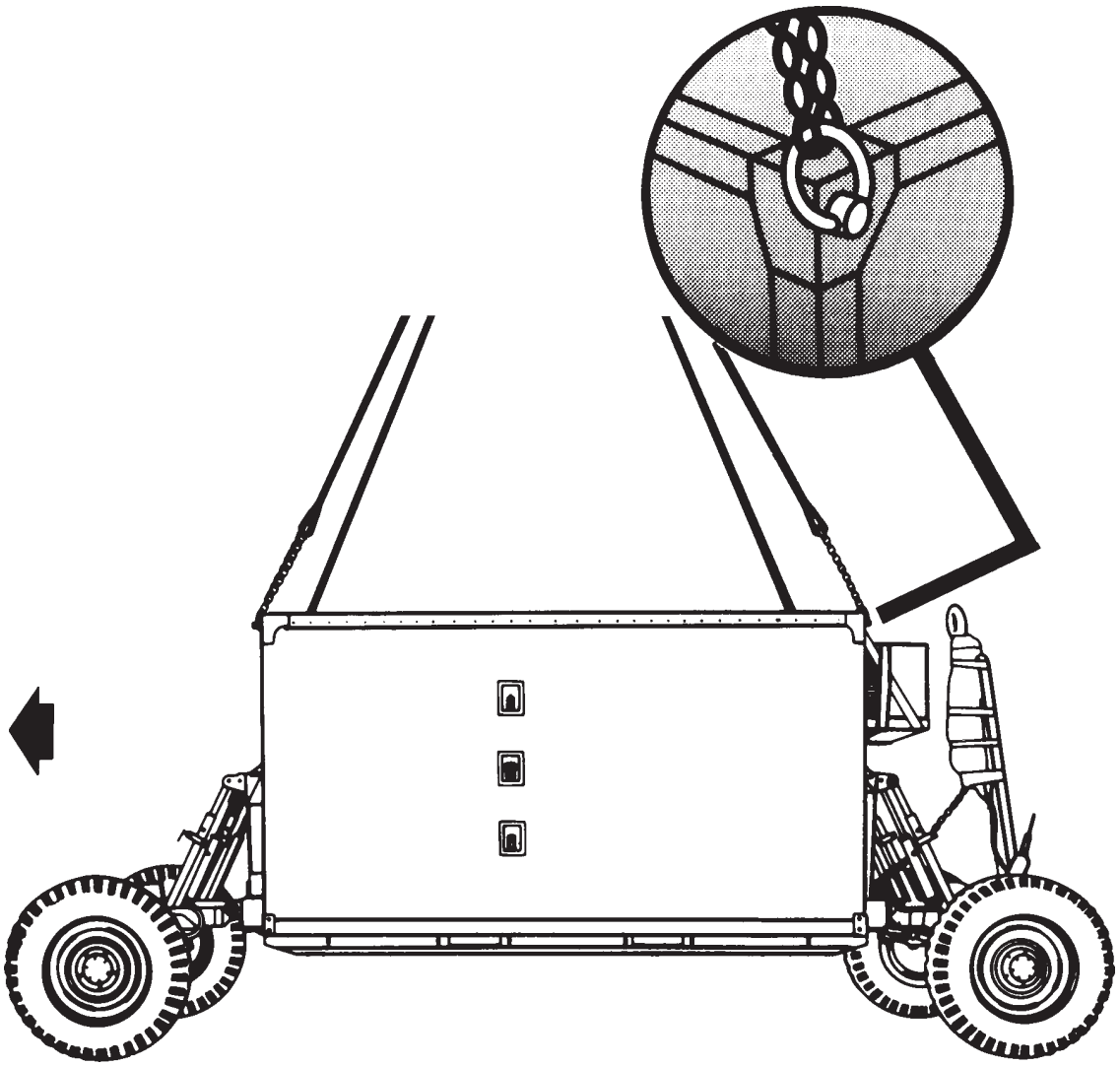

**RIGGING STEPS**

**1.** Position apex fitting on top of the shelter. Route outer sling legs 1 and 2 to the front (door end of the shelter) and inner sling legs 3 and 4 to the rear.

**2.** Loop the chain end of sling leg 1 through the left front lift provision at the top left corner of the shelter. Place the correct link from Table 10-1 in the grab hook. Repeat with sling leg 2 on the right front lift provision.

**3.** Loop the chain end of sling leg 3 through the left rear lift provision at the top left corner of the shelter. Place the correct link from Table 10-1 in the grab hook. Repeat with sling leg 4 on the right rear lift provision.

**4.** Cluster and tie or tape (breakaway technique) all sling legs together on top of the shelter to prevent entanglement during hookup and lift-off.

*Figure 10-1. Electronic Shops*

## 10-3. Communications or Electronic Systems Housed in S-250 Shelters

**a. Applicability.** The following items in Table 10-2 are certified for all helicopters with suitable lift capacity by the US Army Natick Research, Development, and Engineering Center:

**Table 10-2. S-250 Shelters**

| NOMENCLATURE | MAX WEIGHT (POUNDS) | SLING SET | LINK COUNT FRONT/REAR | RECOMMENDED AIRSPEED (KNOTS) |
|---|---|---|---|---|
| AN/TRC-93B (V)1 or (V)2 | 3,250 | 10K | 33/3 | 115 |
| AN/TRC-93B (Reconfiguration) | 3,660 | 10K | 33/3 | 115 |
| AN/TSC-124, Single Channel Objective Tactical Terminal (SCOTT) | 2,100 | 10K | 33/3 | 60 |

**b. Materials.** The following materials are required to rig this load:

**(1)** Sling set (10,000-pound capacity).

**(2)** Tape, adhesive, pressure-sensitive, 2-inch wide roll.

**(3)** Cord, nylon, Type III, 550-pound breaking strength.

**(4)** Webbing, cotton, 1/4-inch, 80-pound breaking strength.

**c. Personnel.** Two persons can prepare and rig this load in 15 minutes.

**d. Procedures.** The following procedures apply to this load:

**(1) Preparation.** Prepare the load using the following steps:

**(a)** Close and secure all doors, vents, and caps with tape or Type III nylon cord.

**(b)** Secure all loose equipment (antennas, electrical lines, hoses, etc.) with tape or Type III nylon cord.

**(c)** Ensure all the bolts in the Environmental Control Unit's (ECU) mounting frame are present and tight.

**(d)** Secure the ECU cover with tape or Type III nylon cord.

**(2) Rigging.** Rig the load according to the steps in Figure 10-2.

**(3) Hookup.** The hookup team stands on top of the shelter. The static wand person discharges the static electricity with the static wand. The hookup person places the apex fitting onto the aircraft cargo hook. The hookup team then moves clear of the load but remains close to the load as the helicopter removes slack from the sling legs. When successful hookup is assured, the hookup team quickly exits the area underneath the helicopter to the designated rendezvous point.

**(4) Derigging.** Derigging is the reverse of the preparation and rigging procedures in steps d (1) and d (2).

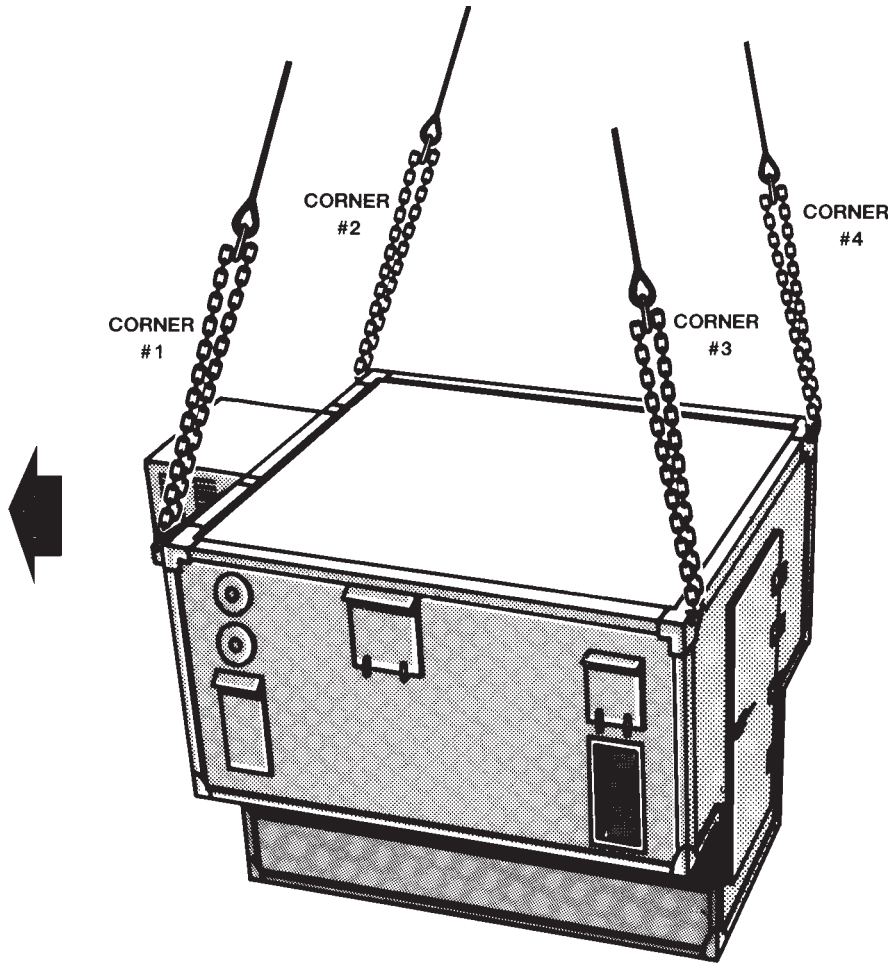


**RIGGING STEPS**

**1.** Position apex fitting on top of the shelter. Route outer sling legs 1 and 2 to the front of the shelter and inner sling legs 3 and 4 to the rear (door end). Sling legs 1 and 3 must be on the left side of the load.

**2.** Loop the chain end of sling leg 1 through the left front lift provision at the top left corner of the shelter. Place the correct link from Table 10-2 in the grab hook. Repeat with sling leg 2 on the right front lift provision. Secure the excess chain with tape or Type III nylon cord.

**3.** Loop the chain end of sling leg 3 through the left rear lift provision at the top left corner of the shelter. Place the correct link from Table 10-2 in the grab hook. Repeat with sling leg 4 on the right rear lift provision.

**4.** Cluster and tie or tape (breakaway technique) all sling legs together on top of the shelter to prevent entanglement during hookup and lift-off.

*Figure 10-2. S-250 Shelters*

## 10-4. Communications or Electronic Systems Housed in Lightweight Multipurpose Shelter (LMS)

**a. Applicability.** The following items in Table 10-3 are certified for all helicopters with suitable lift capacity by the US Army Natick Research, Development, and Engineering Center:

**Table 10-3. Lightweight Multipurpose Shelter (LMS)**

| NOMENCLATURE | MAX WEIGHT (POUNDS) | SLING SET | LINK COUNT FRONT/REAR | RECOMMENDED AIRSPEED (KNOTS) |
|---|---|---|---|---|
| Operations Central Shelter, Firefinder AN/TPQ-36(V)8, S-788 | 2,869 | 10K | 20/3 | 80 |
| Biological Agent, Automatic: Integrated Detection System, S-788 | 3,300 | 10K | 25/3 | 100 |
| Downsized Direct Support Section, Standardized Integrated Command Post Systems (SICPS) | 2,400 | 10K | 10/20 | 90 |

**b. Materials.** The following materials are required to rig this load:

**(1)** Sling set (10,000-pound capacity).

**(2)** Tape, adhesive, pressure-sensitive, 2-inch wide roll.

**(3)** Cord, nylon, Type III, 550-pound breaking strength.

**(4)** Webbing, cotton, 1/4-inch, 80-pound breaking strength.

**c. Personnel.** Two persons can prepare and rig this load in 15 minutes.

**d. Procedures.** The following procedures apply to this load:

**(1) Preparation.** Prepare the load using the following steps:

**(a)** Remove all antennas. Disassemble and securely stow inside the shelter.

**(b)** Close and secure all doors, vents, and caps with tape or Type III nylon cord.

**(c)** Secure all loose equipment (electrical lines, hoses, etc.) with tape or Type III nylon cord.

**(d)** Ensure all the bolts in the Environmental Control Unit's (ECU) mounting frame are present and tight.

**(e)** Secure the ECU cover with tape or Type III nylon cord.

**(f)** Secure the lift rings in the vertical position with Type III nylon cord.

**(2) Rigging.** Rig the load according to the steps in Figure 10-3.

**(3) Hookup.** The hookup team stands on top of the shelter. The static wand person discharges the static electricity with the static wand. The hookup person places the apex fitting onto the aircraft cargo hook. The hookup team then moves clear of the load but remains close to the load as the helicopter removes slack from the sling legs. When successful hookup is assured, the hookup team quickly exits the area underneath the helicopter to the designated rendezvous point.

**(4) Derigging.** Derigging is the reverse of the preparation and rigging procedures in steps d (1) and d (2).

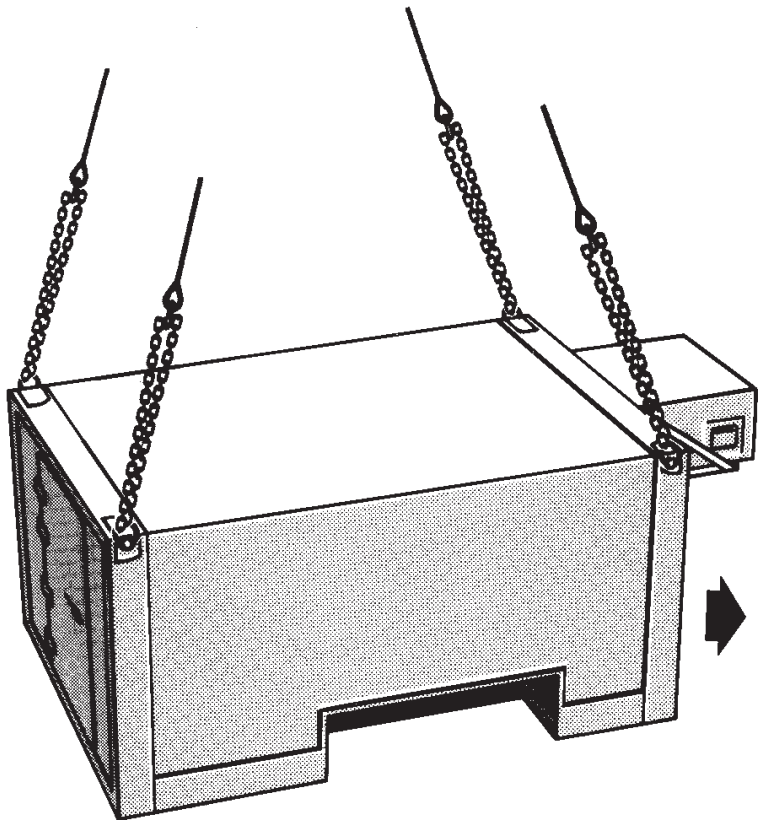

**RIGGING STEPS**

**1.** Position apex fitting on top of the shelter. Route outer sling legs 1 and 2 to the front of the shelter and inner sling legs 3 and 4 to the rear (door end). Sling legs 1 and 3 must be on the left side of the load.

**2.** Loop the chain end of sling leg 1 through the left front lift provision at the top left corner of the shelter. Place the correct link from Table 10-3 in the grab hook. Repeat with sling leg 2 on the right front lift provision. Secure the excess chain with tape or Type III nylon cord.

**3.** Loop the chain end of sling leg 3 through the left rear lift provision at the top left corner of the shelter. Place the correct link from Table 10-3 in the grab hook. Repeat with sling leg 4 on the right rear lift provision. Secure the excess chain with tape or Type III nylon cord.

**4.** Cluster and tie or tape (breakaway technique) all sling legs together on top of the shelter to prevent entanglement during hookup and lift-off.

*Figure 10-3. Lightweight Multipurpose Shelter (LMS)*

## 10-5. Communications or Electronic Systems Housed in S-280 Shelters

**a. Applicability.** The following items in Table 10-4 are certified for all helicopters with suitable lift capacity by the US Army Natick Research, Development, and Engineering Center:

**Table 10-4. S-280 Shelters**

| NOMENCLATURE | MAX WEIGHT (POUNDS) | SLING SET | LINK COUNT FRONT/REAR | RECOMMENDED AIRSPEED (KNOTS) |
|---|---|---|---|---|
| Shelter, Battery Servicing, AN/TSM-133 | 5,240 | 10K | Door is the Front 30/3 | 65 |
| Facility, Improved Message, AN/TSC-58A | 5,368 | 10K | Door is the Front 37/3 | 55 |
| Facility, Improved Message, AN/MSC-29A | 5,368 | 10K | Door is the Front 37/3 | 55 |
| Station, System Master, Reporting, Position Location, AN/TSQ-129 | 6,050 | 15K | ECU is the Front 10/4 | 75 |
| Station, Enhanced Position Location Reporting System Net AN/TSQ-158 | 6,289 | 15K | ECU is the Front 10/4 | 75 |
| Terminal, Regency Net Force, AN/TRC-179(V)1 | 8,200 | 10K | Door is the Front 30/3 | 70 |
| Communications Nodal Control Element, AN/TSQ-111 | 10,000 | 25K | Door is the Front 3/24 | 80 |
| Multiplexer Terminal Set, AN/TSQ-146(V) | 6,190 | 10K | Door is the Front 5/50 | 90 |
| IFTE Base Shop Test Facility (BSTF), Basic, S-280C/G Shelter, AN/TSM-191(V)3 | 7,806 | 10K | ECU is the Front 3/3 | 50 |
| IFTE BSTF, Hawk, S-280C/G Shelter, AN/TSM-191(V)2 | 7,748 | 10K | ECU is the Front 3/3 | 50 |
| IFTE 60 Hz Storage Shelter, S-280C/G Shelter, S-744/TSM-191(V) | 6,365 | 10K | ECU is the Front 3/3 | 70 |
| IFTE 400 Hz Storage Shelter, S-280C/G Shelter, S-175/TSM-191(V) | 5,119 | 10K | ECU is the Front 3/3 | 70 |
| Tactical Satellite Terminal, AN/TSC-85B | 6,200 | 10K | ECU is the Front 33/3 | 70 |
| E1045 Bottle Cleaning and Charging Station | 6,400 | 15K | Door is the Front 3/15 | 70 |
| E1022 Maintenance Facility Night Sight | 6,400 | 15K | Door is the Front 3/3 | 70 |

**Table 10-4. S-280 Shelters (continued)**

| NOMENCLATURE | MAX WEIGHT (POUNDS) | SLING SET | LINK COUNT FRONT/REAR | RECOMMENDED AIRSPEED (KNOTS) |
|---|---|---|---|---|
| AN/TYA-16B, TAMCN A0294 | 3,325 | 15K | Door is the Front 3/3 | 65 |
| Airborne Reconnaissance Low-Imagery (ARL-I) and Airborne Reconnaissance Low-Comint (ARL-C) Fly Away Kit, Type A-1 | 8,500 | 10K | ECU is the Front 3/10 | 80 |
| ARL-I and ARL-C Fly Away Kit, Type B-1 | 8,500 | 10K | ECU is the Front 3/10 | 80 |
| ARL-I and ARL-C Fly Away Kit, Type C-1 | 8,500 | 10K | ECU is the Front 3/10 | 80 |

**NOTES:**

**1. Do not allow the sling legs to become entangled with the rope lashing points located near the lift points.**

**2. The CH-47 is not recommended for single point sling loading of the Integrated Family of Test Equipment Shelters.**

**b. Materials.** The following materials are required to rig this load:

**(1)** Sling set (as listed in table 10-4).

**(2)** Tape, adhesive, pressure-sensitive, 2-inch wide roll.

**(3)** Cord, nylon, Type III, 550-pound breaking strength.

**(4)** Webbing, cotton, 1/4-inch, 80-pound breaking strength.

**c. Personnel.** Two persons can prepare and rig this load in 15 minutes.

**d. Procedures.** The following procedures apply to this load:

**(1) Preparation.** Prepare the load using the following steps:

**(a)** Remove all antennas. Disassemble and securely stow inside the shelter.

**(b)** Close and secure all doors, vents, and caps with tape or Type III nylon cord.

**(c)** Secure all loose equipment (electrical lines, hoses, etc.) with tape or Type III nylon cord.

**(d)** Ensure all the bolts in the Environmental Control Unit's (ECU) mounting frame are present and tight.

**(e)** Secure the ECU cover with tape or Type III nylon cord.

**(f)** Secure the lift rings in the vertical position with Type III nylon cord.

**(2) Rigging.** Rig the load according to the steps in Figure 10-4.

**(3) Hookup.** The hookup team stands on top of the shelter. The static wand person discharges the static electricity with the static wand. The hookup person places the apex fitting onto the aircraft cargo hook. The hookup team then moves clear of the load but remains close to the load as the helicopter removes slack from the sling legs. When successful hookup is assured, the hookup team quickly exits the area underneath the helicopter to the designated rendezvous point.

**CAUTION**

**Brief the helicopter crew to relax the sling leg tension and hover to the side of the load when releasing the apex fitting to prevent damage to the roof of the shelter.**

**(4) Derigging.** Derigging is the reverse of the preparation and rigging procedures in steps d (1) and d (2).

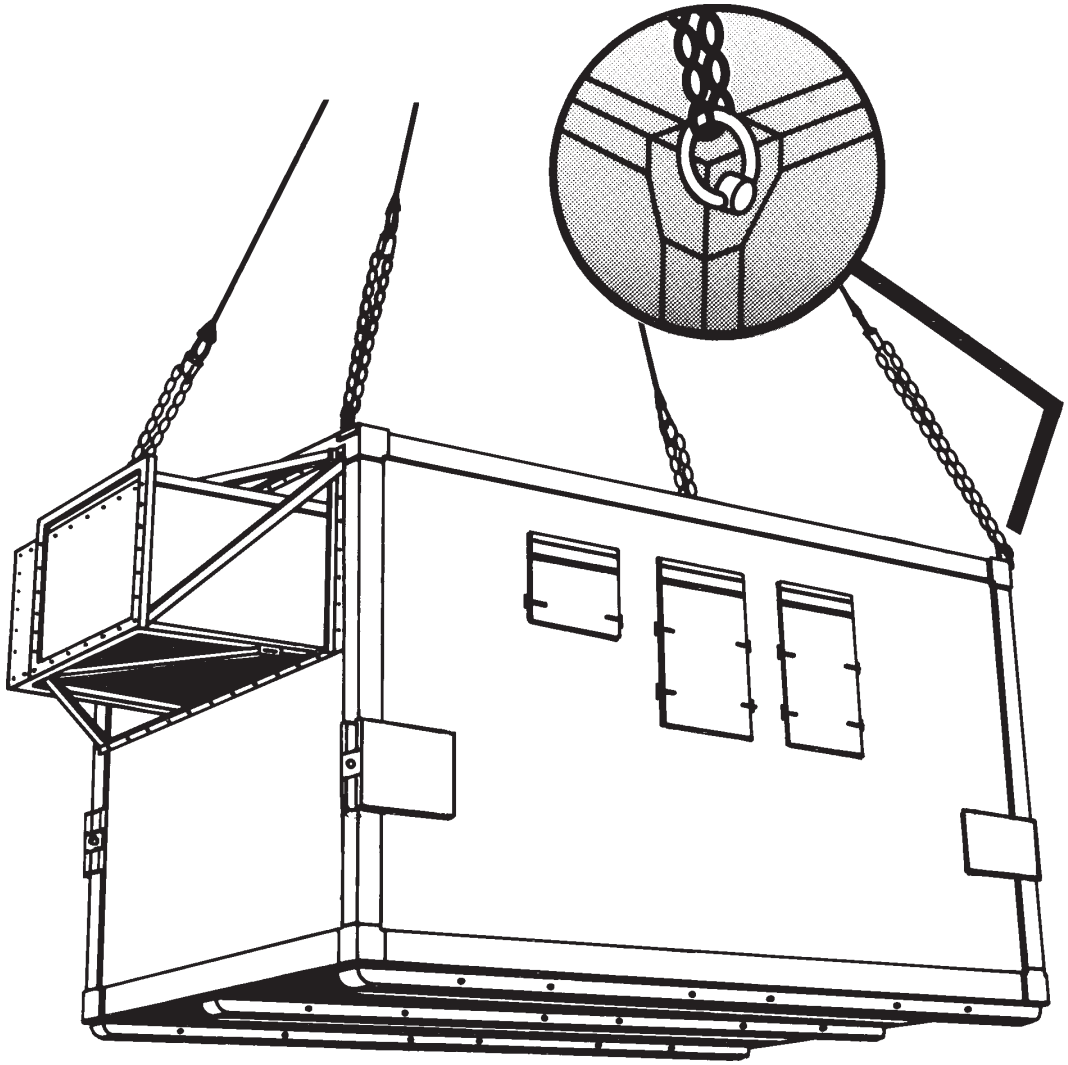

**RIGGING STEPS**

**1.** Position apex fitting on top of the shelter. Route outer sling legs 1 and 2 to the front of the shelter and inner sling legs 3 and 4 to the rear. Sling legs 1 and 3 must be on the left side of the load.

**2.** Loop the chain end of sling leg 1 through the left front lift provision at the top left corner of the shelter. Place the correct link from Table 10-4 in the grab hook. Repeat with sling leg 2 on the right front lift provision. Secure the excess chain with tape or Type III nylon cord.

**3.** Loop the chain end of sling leg 3 through the left rear lift provision at the top left corner of the shelter. Place the correct link from Table 10-4 in the grab hook. Repeat with sling leg 4 on the right rear lift provision. Secure the excess chain with tape or Type III nylon cord.

**4.** Cluster and tie or tape (breakaway technique) all sling legs together on top of the shelter to prevent entanglement during hookup and lift-off.

*Figure 10-4. S-280 Shelters*

## 10-6. 8- x 8- x 10-Foot Shelter Systems

**a. Applicability.** The following items in Table 10-5 are certified for all helicopters with suitable lift capacity by the US Army Natick Research, Development, and Engineering Center:

**Table 10-5. 8- x 8- x 10-Foot Shelter Systems**

| NOMENCLATURE | MAX WEIGHT (POUNDS) | SLING SET | LINK COUNT FRONT/REAR | RECOMMENDED AIRSPEED (KNOTS) |
|---|---|---|---|---|
| Shelter, Electromechanical Induction (EMI), TAMCN C6110 | 7,700 | 15K | Door is the Front 5/5 | 70 |
| S-715/T, Reproduction/Distribution-Facility Shelter | 4,826 | 15K | Door is the Front 3/3 | 50 |
| Electronic EMI HSOP Shelter | 4,140 | 15K | Door is the Front 3/3 | 60 |
| Shelter, Radar Set, Precision Approach, AN/TPN-22, TAMCN Q2115 | 7,200 | 15K | Door is the Front 3/3 | 80 |
| Shelter, Communications Central, AN/MSC-63A, TAMCN A0258 | 6,619 | 15K | Door is the Aft 5/5 | 85 |
| Air Radar Shelter, AN/TPS-73 | 14,500 | 40K | Door is the Front 5/8 | 80 |
| Radar Shelter, AN/TPS-63B | 7,360 | 15K | Door is the Front 3/10 | 70 |
| 10-Foot Rigid EMD Communications Shelter | 7,000 (Minimum Weight) | 15K | Door is the Front 3/3 | 70 |

**b. Materials.** The following materials are required to rig this load:

**(1)** Sling set (15,000 or 40,000-pound capacity).

**(2)** Tape, adhesive, pressure-sensitive, 2-inch wide roll.

**(3)** Cord, nylon, Type III, 550-pound breaking strength.

**(4)** Webbing, cotton, 1/4-inch, 80-pound breaking strength.

**c. Personnel.** Two persons can prepare and rig this load in 15 minutes.

**d. Procedures.** The following procedures apply to this load:

**(1) Preparation.** Prepare the load using the following steps:

**(a)** Remove all antennas. Disassemble and securely stow inside the shelter.

**(b)** Close and secure all doors, vents, and caps with tape or Type III nylon cord.

**(c)** Secure all loose equipment (electrical lines, hoses, etc.) with tape or Type III nylon cord.

**(2) Rigging.** Rig the load according to the steps in Figure 10-5.

**(3) Hookup.** The hookup team stands on top of the shelter. The static wand person discharges the static electricity with the static wand. The hookup person places the apex fitting onto the aircraft cargo hook. The hookup team then moves clear of the load but remains close to the load as the helicopter removes slack from the sling legs. When successful hookup is assured, the hookup team quickly exits the area underneath the helicopter to the designated rendezvous point.

**(4) Derigging.** Derigging is the reverse of the preparation and rigging procedures in steps d (1) and d (2).

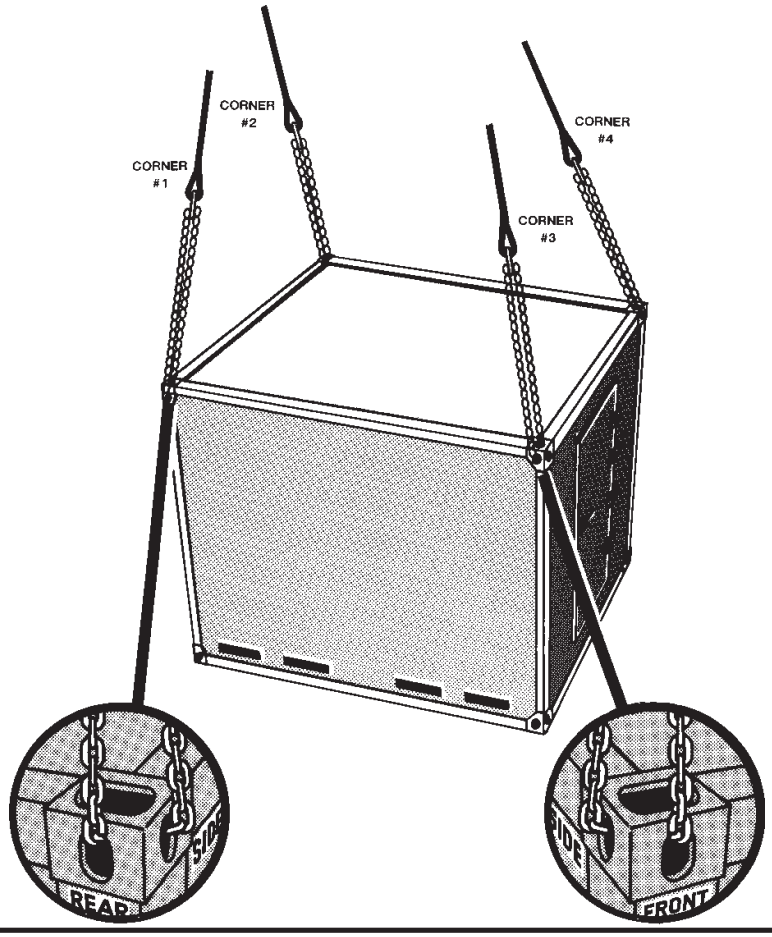


**RIGGING STEPS**

**1.** Position apex fitting on top of the shelter. Route outer sling legs 1 and 2 to the front of the shelter and inner sling legs 3 and 4 to the rear. Sling legs 1 and 3 must be on the left side of the load.

**2.** Loop the chain end of sling leg 1 through the opening in the side of the ISO lift provision at the top left corner of the shelter and out through the front opening. Place the correct link from Table 10-5 in the grab hook. Repeat with sling leg 2 on the right front lift provision.

**3.** Loop the chain end of sling leg 3 through the opening in the side of the ISO lift provision at the top left corner of the shelter and out through the rear opening. Place the correct link from Table 10-5 in the grab hook. Repeat with sling leg 4 on the right rear lift provision.

**4.** Cluster and tie or tape (breakaway technique) all sling legs together on top of the shelter to prevent entanglement during hookup and lift-off.

*Figure 10-5. 8- x 8- x 10-Foot Shelter Systems*

## 10-7. Downsized Digital Group Multiplexer (DDGM) Shelter Assemblages

**a. Applicability.** The following items in Table 10-6 are certified for all helicopters with suitable lift capacity by the US Army Natick Research, Development, and Engineering Center:

**Table 10-6. Downsized Digital Group Multiplexer (DDGM) Shelter Assemblages**

| NOMENCLATURE | MAX WEIGHT (POUNDS) | SLING SET | LINK COUNT FRONT/REAR | RECOMMENDED AIRSPEED (KNOTS) |
|---|---|---|---|---|
| AN/TRC-173A | 3,500 | 10K | 3/3 | 80 |
| AN/TRC-174A | 3,425 | 10K | 3/3 | 80 |
| AN/TRC-175A | 3,350 | 10K | 3/3 | 80 |
| AN/TRC-138B | 3,525 | 10K | 3/3 | 80 |
| AN/TRC-138C | 3,430 | 10K | 3/3 | 80 |

**b. Materials.** The following materials are required to rig this load:

**(1)** Sling set (10,000-pound capacity).

**(2)** Tape, adhesive, pressure-sensitive, 2-inch wide roll.

**(3)** Cord, nylon, Type III, 550-pound breaking strength.

**(4)** Webbing, cotton, 1/4-inch, 80-pound breaking strength.

**c. Personnel.** Two persons can prepare and rig this load in 20 minutes.

**d. Procedures.** The following procedures apply to this load:

**(1) Preparation.** Prepare the load using the following steps:

**(a)** Secure all drawers and internal equipment with tape or Type III nylon cord.

**(b)** Close and secure all doors, vents, and caps with tape or Type III nylon cord.

**(c)** Secure the air conditioner cover with Type III nylon cord.

**(2) Rigging.** Rig the load according to the steps in Figure 10-6.

**(3) Hookup.** The hookup team stands on top of the shelter. The static wand person discharges the static electricity with the static wand. The hookup person places the apex fitting onto the aircraft cargo hook. The hookup team then moves clear of the load but remains close to the load as the helicopter removes slack from the sling legs. When successful hookup is assured, the hookup team quickly exits the area underneath the helicopter to the designated rendezvous point.

**(4) Derigging.** Derigging is the reverse of the preparation and rigging procedures in steps d (1) and d (2).

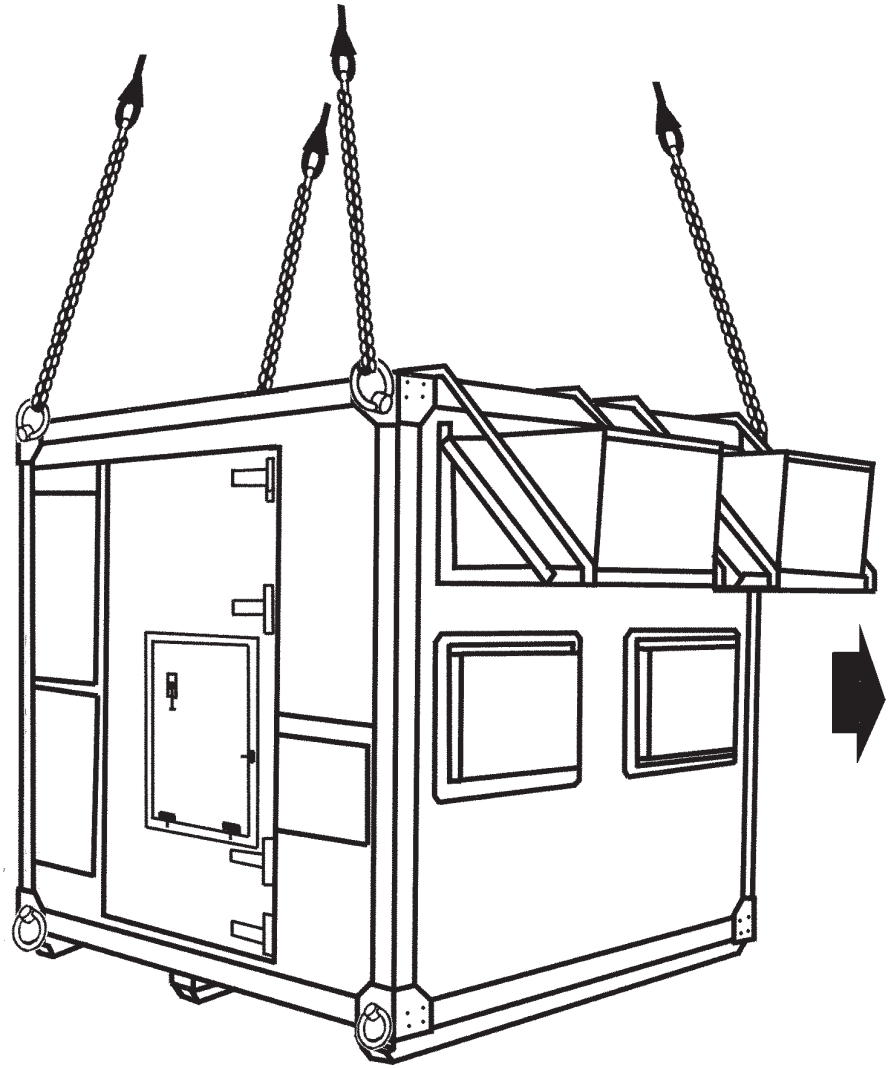

**RIGGING STEPS**

**1.** Position apex fitting on top of the shelter. Route outer sling legs 1 and 2 to the front of the shelter (ECU end) and inner sling legs 3 and 4 to the rear. Sling legs 1 and 3 must be on the left side of the load.

**2.** Loop the chain end of sling leg 1 through the left front lift provision. Place the correct link from Table 10-6 in the grab hook. Repeat with sling leg 2 on the right front lift provision.

**3.** Loop the chain end of sling leg 3 through the left rear lift provision. Place the correct link from Table 10-6 in the grab hook. Repeat with sling leg 4 on the right rear lift provision.

**4.** Cluster and tie or tape (breakaway technique) all sling legs together on top of the shelter to prevent entanglement during hookup and lift-off.

*Figure 10-6. Downsized Digital Group Multiplexer (DDGM) Shelter Assemblages*

## 10-8. AN/TYC-5A Data Communications Terminal

**a. Applicability.** The following item in Table 10-7 is certified for all helicopters with suitable lift capacity by the US Army Natick Research, Development, and Engineering Center:

**Table 10-7. AN/TYC-5A Data Communications Terminal**

| NOMENCLATURE | MAX WEIGHT (POUNDS) | SLING SET | LINK COUNT FRONT/REAR | RECOMMENDED AIRSPEED (KNOTS) |
|---|---|---|---|---|
| AN/TYC-5A Data Communications Terminal | 7,451 | 15K | 5/5 | 70 |

**b. Materials.** The following materials are required to rig this load:

**(1)** Sling set (15,000-pound capacity).

**(2)** Tape, adhesive, pressure-sensitive, 2-inch wide roll.

**(3)** Cord, nylon, Type III, 550-pound breaking strength.

**(4)** Webbing, cotton, 1/4-inch, 80-pound breaking strength.

**c. Personnel.** Two persons can prepare and rig this load in 15 minutes.

**d. Procedures.** The following procedures apply to this load:

**(1) Preparation.** Prepare the load using the following steps:

**(a)** Secure all internal equipment with tape or Type III nylon cord.

**(b)** Close and secure all doors, vents, and caps with tape or Type III nylon cord.

**(c)** Remove the transporter dolly lift sets if attached to the shelter.

**(2) Rigging.** Rig the load according to the steps in Figure 10-7.

**(3) Hookup.** The hookup team stands on top of the shelter. The static wand person discharges the static electricity with the static wand. The hookup person places the apex fitting onto the aircraft cargo hook. The hookup team then moves clear of the load but remains close to the load as the helicopter removes slack from the sling legs. When successful hookup is assured, the hookup team quickly exits the area underneath the helicopter to the designated rendezvous point.

**(4) Derigging.** Derigging is the reverse of the preparation and rigging procedures in steps d (1) and d (2).

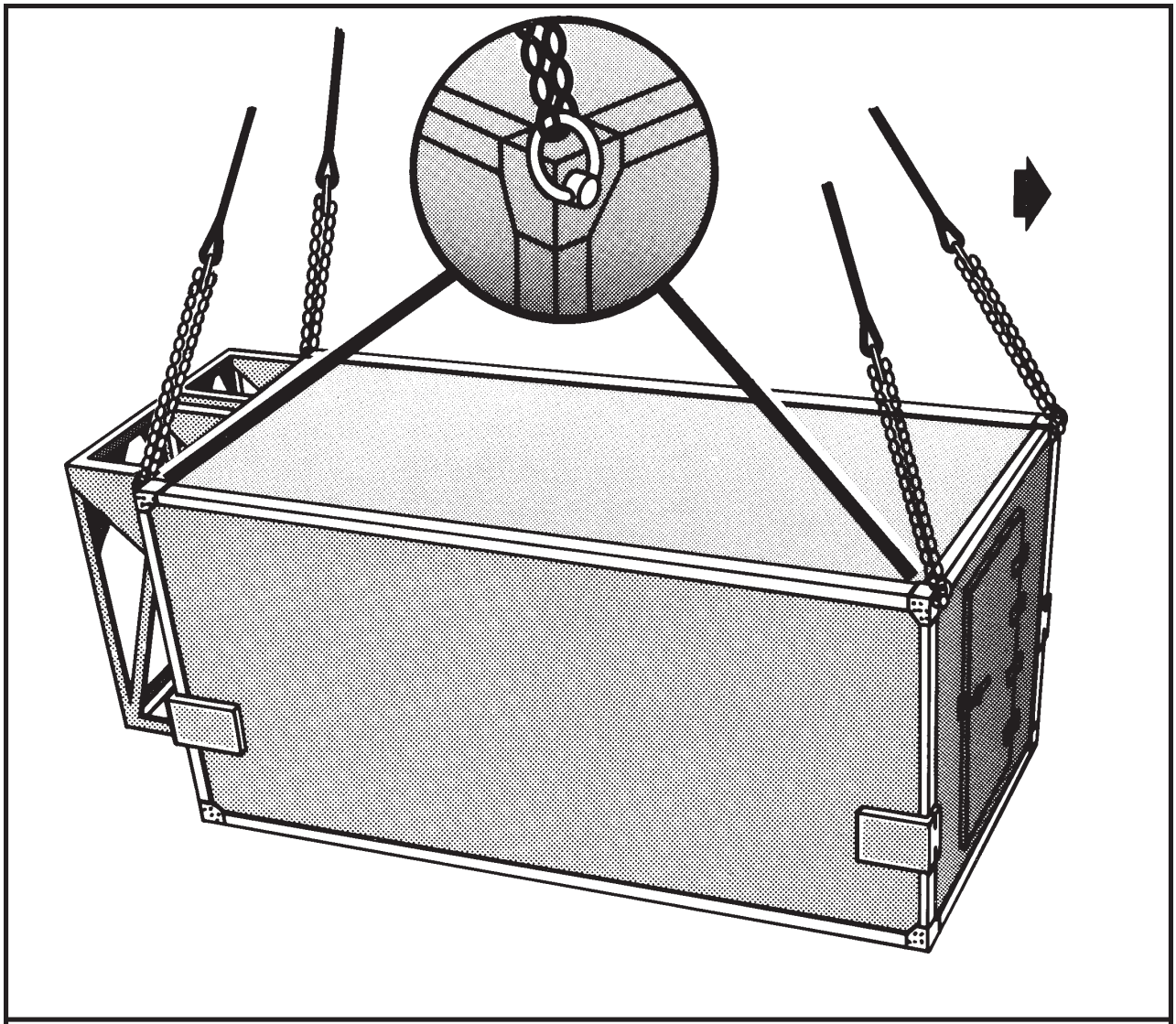

**RIGGING STEPS**

**1.** Position apex fitting on top of the shelter. Route outer sling legs 1 and 2 to the front of the shelter (door end) and inner sling legs 3 and 4 to the rear. Sling legs 1 and 3 must be on the left side of the load.

**2.** Loop the chain end of sling leg 1 through the left front lift provision. Place the correct link from Table 10-7 in the grab hook. Repeat with sling leg 2 on the right front lift provision.

**3.** Loop the chain end of sling leg 3 through the left rear lift provision. Place the correct link from Table 10-7 in the grab hook. Repeat with sling leg 4 on the right rear lift provision.

**4.** Cluster and tie or tape (breakaway technique) all sling legs together on top of the shelter to prevent entanglement during hookup and lift-off.

*Figure 10-7. AN/TYC-5A Data Communications Terminal*

## 10-9. AN/TRN-44 Tactical Air Navigation Shelter

**a. Applicability.** The following item in Table 10-8 is certified for all helicopters with suitable lift capacity by the US Army Natick Research, Development, and Engineering Center:

**Table 10-8. AN/TRN-44 Tactical Air Navigation Shelter**

| NOMENCLATURE | MAX WEIGHT (POUNDS) | SLING SET | LINK COUNT FRONT/REAR | RECOMMENDED AIRSPEED (KNOTS) |
|---|---|---|---|---|
| AN/TRN-44 Tactical Air Navigation Shelter | 6,800 | 15K | 3/3 | 75 |

**b. Materials.** The following materials are required to rig this load:

**(1)** Sling set (15,000-pound capacity).

**(2)** Tape, adhesive, pressure-sensitive, 2-inch wide roll.

**(3)** Cord, nylon, Type III, 550-pound breaking strength.

**(4)** Webbing, cotton, 1/4-inch, 80-pound breaking strength.

**c. Personnel.** Two persons can prepare and rig this load in 15 minutes.

**d. Procedures.** The following procedures apply to this load:

**(1) Preparation.** Prepare the load using the following steps:

**(a)** Secure all internal equipment with tape or Type III nylon cord.

**(b)** Close and secure all doors, vents, and caps with tape or Type III nylon cord.

**(2) Rigging.** Rig the load according to the steps in Figure 10-8.

**(3) Hookup.** The hookup team stands on top of the shelter. The static wand person discharges the static electricity with the static wand. The hookup person places the apex fitting onto the aircraft cargo hook. The hookup team then moves clear of the load but remains close to the load as the helicopter removes slack from the sling legs. When successful hookup is assured, the hookup team quickly exits the area underneath the helicopter to the designated rendezvous point.

**(4) Derigging.** Derigging is the reverse of the preparation and rigging procedures in steps d (1) and d (2).

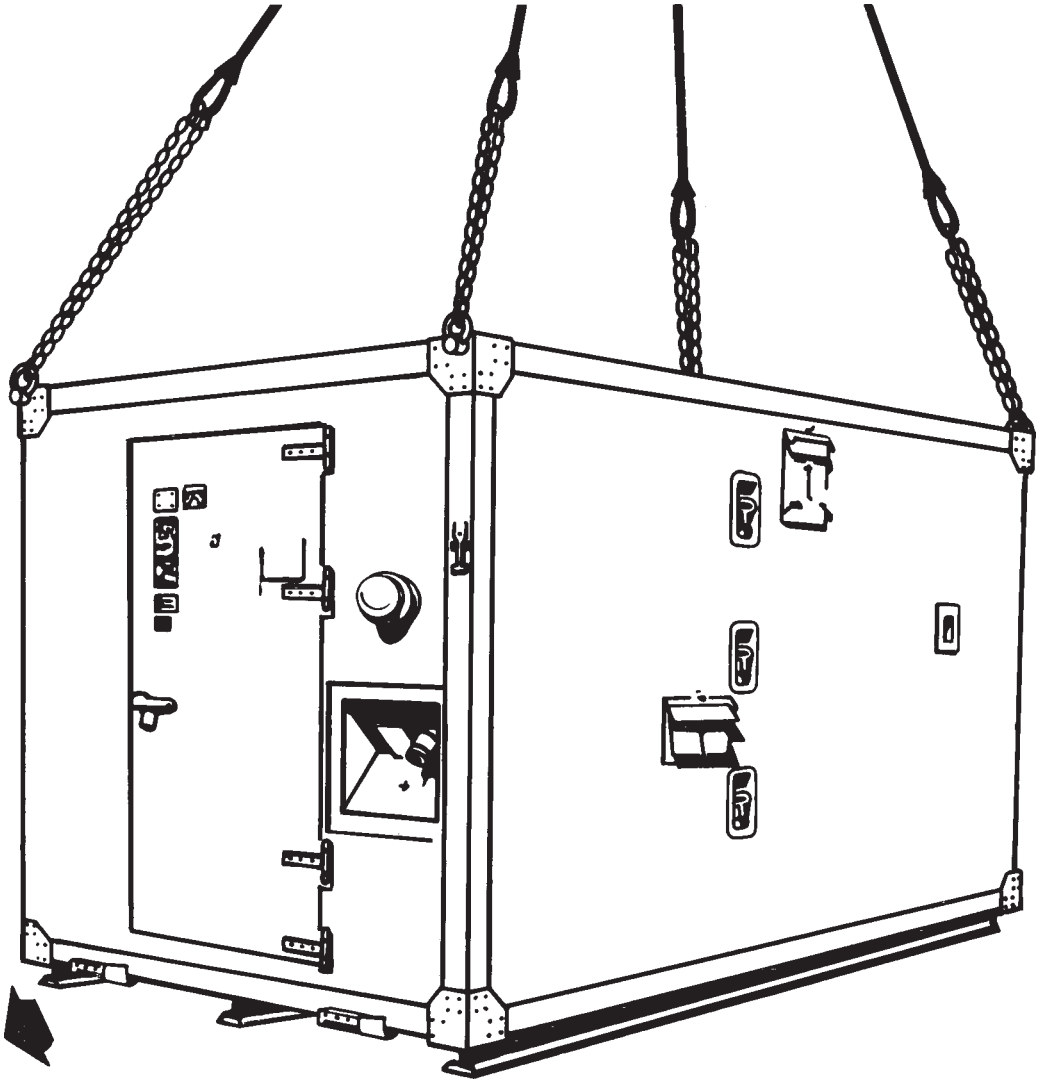

**RIGGING STEPS**

**1.** Position apex fitting on top of the shelter. Route outer sling legs 1 and 2 to the front of the shelter (door end) and inner sling legs 3 and 4 to the rear. Sling legs 1 and 3 must be on the left side of the load.

**2.** Loop the chain end of sling leg 1 through the left front lift provision. Place the correct link from Table 10-8 in the grab hook. Repeat with sling leg 2 on the right front lift provision.

**3.** Loop the chain end of sling leg 3 through the left rear lift provision. Place the correct link from Table 10-8 in the grab hook. Repeat with sling leg 4 on the right rear lift provision.

**4.** Cluster and tie or tape (breakaway technique) all sling legs together on top of the shelter to prevent entanglement during hookup and lift-off.

*Figure 10-8. AN/TRN-44 Tactical Air Navigation Shelter*

## 10-10. Hardened Army Tactical Shelter (HATS)

**a. Applicability.** The following item in Table 10-9 is certified for all helicopters with suitable lift capacity by the US Army Natick Research, Development, and Engineering Center:

**Table 10-9. Hardened Army Tactical Shelter (HATS)**

| NOMENCLATURE | MAX WEIGHT (POUNDS) | SLING SET | LINK COUNT FRONT/REAR | RECOMMENDED AIRSPEED (KNOTS) |
|---|---|---|---|---|
| Hardened Army Tactical Shelter, S-658G | 8,160 | 10K | 3/30 | 70 |

**b. Materials.** The following materials are required to rig this load:

**(1)** Sling set (10,000-pound capacity).

**(2)** Tape, adhesive, pressure-sensitive, 2-inch wide roll.

**(3)** Cord, nylon, Type III, 550-pound breaking strength.

**(4)** Webbing, cotton, 1/4-inch, 80-pound breaking strength.

**c. Personnel.** Two persons can prepare and rig this load in 15 minutes.

**d. Procedures.** The following procedures apply to this load:

**(1) Preparation.** Prepare the load using the following steps:

**(a)** Secure all internal equipment with tape or Type III nylon cord.

**(b)** Close and secure all doors, vents, and caps with tape or Type III nylon cord.

**(c)** Secure the air conditioner panels with tape.

**(2) Rigging.** Rig the load according to the steps in Figure 10-9.

**(3) Hookup.** The hookup team stands on top of the shelter. The static wand person discharges the static electricity with the static wand. The hookup person places the apex fitting onto the aircraft cargo hook. The hookup team then moves clear of the load but remains close to the load as the helicopter removes slack from the sling legs. When successful hookup is assured, the hookup team quickly exits the area underneath the helicopter to the designated rendezvous point.

**(4) Derigging.** Derigging is the reverse of the preparation and rigging procedures in steps d (1) and d (2).

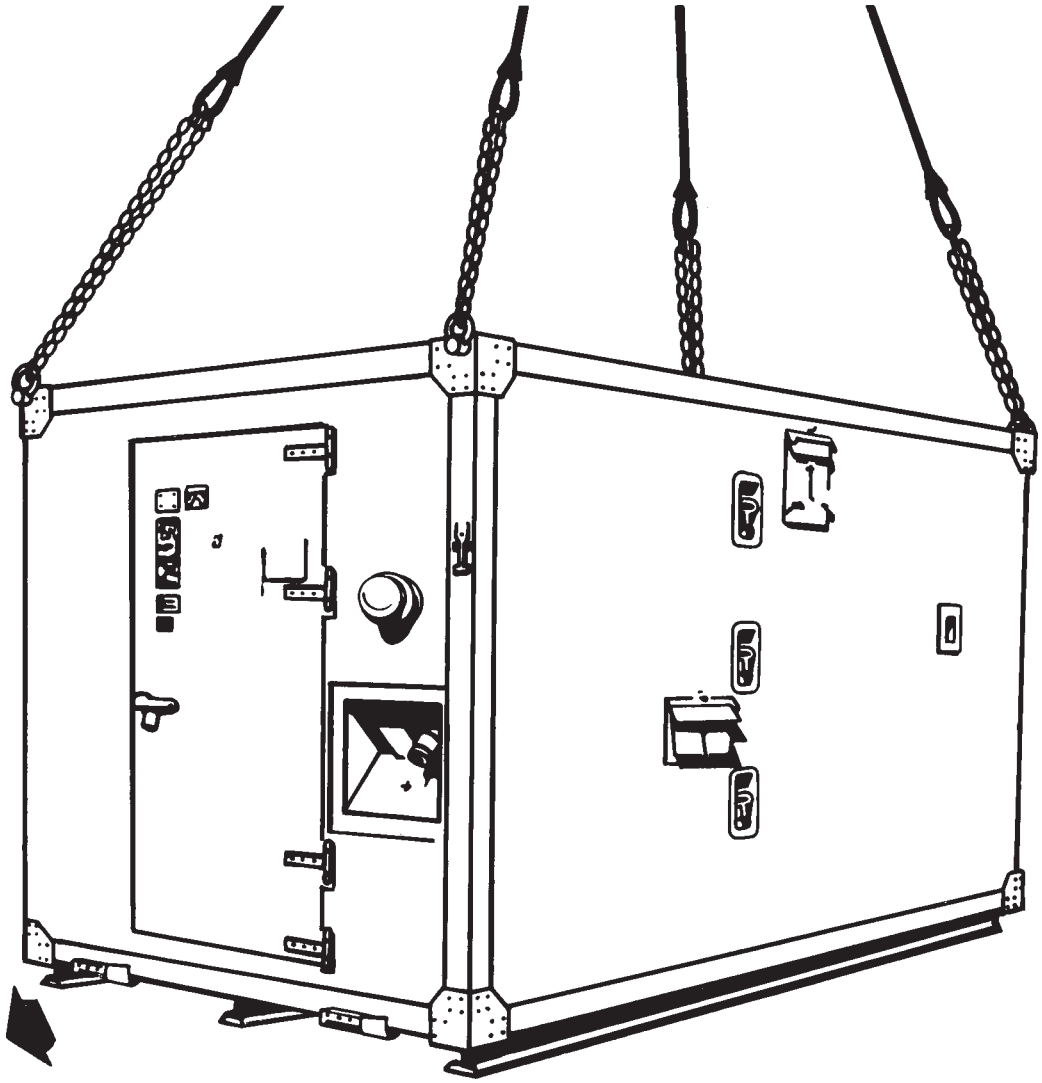

**RIGGING STEPS**

**1.** Position apex fitting on top of the shelter. Route outer sling legs 1 and 2 to the front of the shelter (door end) and inner sling legs 3 and 4 to the rear. Sling legs 1 and 3 must be on the left side of the load.

**2.** Loop the chain end of sling leg 1 through the left front lift provision. Place the correct link from Table 10-9 in the grab hook. Repeat with sling leg 2 on the right front lift provision.

**3.** Loop the chain end of sling leg 3 through the left rear lift provision. Place the correct link from Table 10-9 in the grab hook. Repeat with sling leg 4 on the right rear lift provision.

**4.** Cluster and tie or tape (breakaway technique) all sling legs together on top of the shelter to prevent entanglement during hookup and lift-off.

*Figure 10-9. Hardened Army Tactical Shelter (HATS)*

## 10-11. Cradle Mounted AN/TPQ-32A Radar Set, Component of the AN/MPQ-49A Forward Area Alerting Radar (FAAR) System

**a. Applicability.** The following item in Table 10-10 is certified for all helicopters with suitable lift capacity by the US Army Natick Research, Development, and Engineering Center:

**Table 10-10. Cradle Mounted AN/TPQ-32A Radar Set**

| NOMENCLATURE | MAX WEIGHT (POUNDS) | SLING SET | LINK COUNT FRONT/REAR | RECOMMENDED AIRSPEED (KNOTS) |
|---|---|---|---|---|
| AN/TPQ-32A Cradle Mounted Radar Set (Cradle, S-250/G Shelter, and a Generator) | 7,100 | 10K | 3/20 | 90 |

**NOTE: The AN/TPQ-32A must be removed from the truck prior to sling loading.**

**b. Materials.** The following materials are required to rig this load:

**(1)** Sling set (10,000-pound capacity).

**(2)** Additional chain lengths with couplings (4 each).

**(3)** Tape, adhesive, pressure-sensitive, 2-inch wide roll.

**(3)** Cord, nylon, Type III, 550-pound breaking strength.

**(4)** Webbing, cotton, 1/4-inch, 80-pound breaking strength.

**(6)** Tie-down strap, cargo, CGU-1/B (as required).

**(7)** Wrench, box end, 9/16-inch.

**c. Personnel.** Two persons can prepare and rig this load in 25 minutes.

**d. Procedures.** The following procedures apply to this load:

**(1) Preparation.** Prepare the load using the following steps:

**(a)** Remove the cradle from the modified M35A2 truck and remount the mast in the vertical position in accordance with TM 9-1430-588-10.

**(b)** Remount the antenna reflectors from over the generator assembly to the front of the cradle by removing and replacing the quick release pins.

**(c)** Remove the two turnbuckles located between the front (shelter door end) cradle tie-down provision and the shelter lifting provision using a 9/16-inch box wrench. Store them inside the shelter or in a cradle cabinet.

**(d)** Pin the mud flaps in the up position.

**(e)** Secure all loose equipment inside the shelter and between the cradle and the shelter with Type III nylon cord, tape, or tie-down straps.

**(f)** Close and secure all doors, vents, and caps with tape or Type III nylon cord.

**(2) Rigging.** Rig the load according to the steps in Figure 10-10.

**(3) Hookup.** The hookup team stands on top of the shelter. The static wand person discharges the static electricity with the static wand. The hookup person places the apex fitting onto the aircraft cargo hook. The hookup team then moves clear of the load but remains close to the load as the helicopter removes slack from the sling legs. When successful hookup is assured, the hookup team quickly exits the area underneath the helicopter to the designated rendezvous point.

**(4) Derigging.** Derigging is the reverse of the preparation and rigging procedures in steps d (1) and d (2).

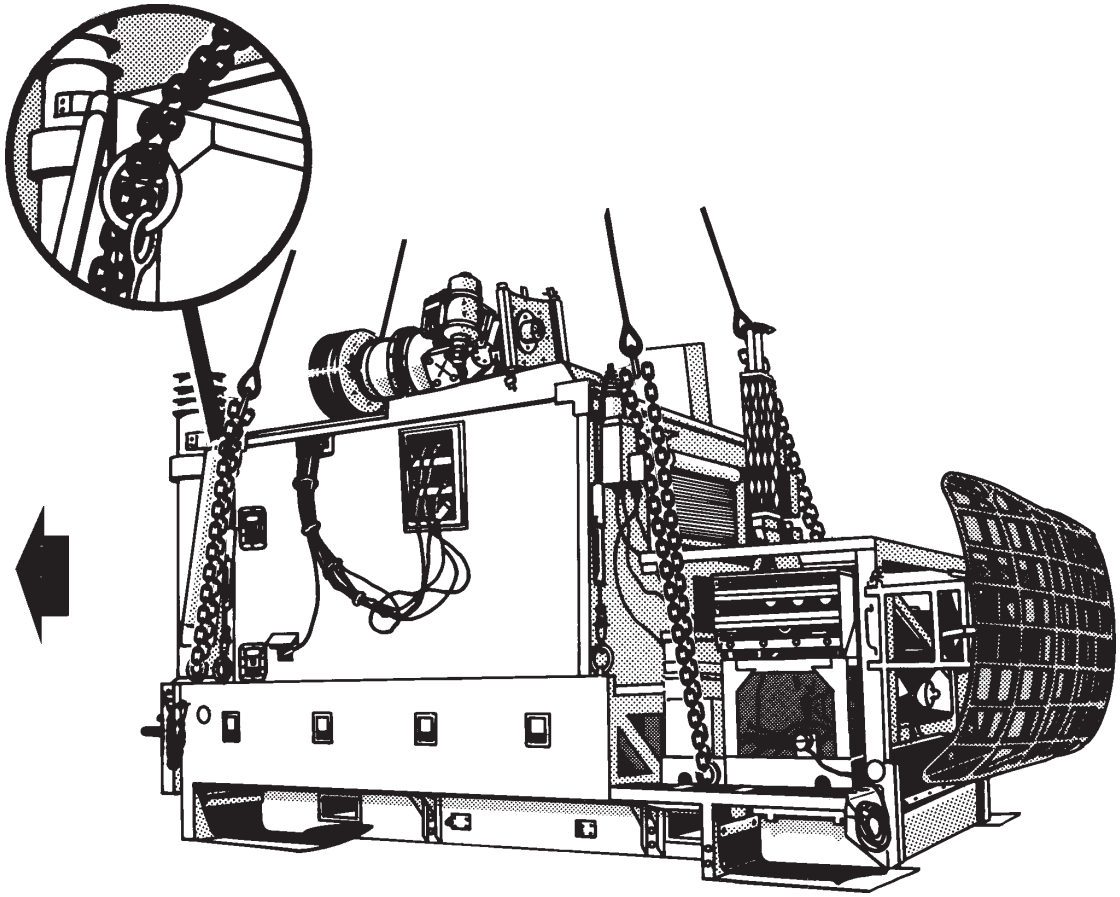

**RIGGING STEPS**

**1.** Attach an additional chain leg to each sling leg using the coupling links.

**2.** Position the apex fitting on top of the shelter. Route outer sling legs 1 and 2 to the front of the shelter (door end) and inner sling legs 3 and 4 to the rear. Sling legs 1 and 3 must be on the left side of the load.

**3.** Loop the chain end of sling leg 1 through the left front lift provision of the shelter and through the left front lift provision of the cradle. Be sure to use the cradle lift provision, not the tie-down provision. Place the correct link from Table 10-10 in the grab hook. Repeat with sling leg 2 and the right front lift provision of the shelter and cradle. Secure excess chain with tape or nylon cord.

**4.** Loop the chain end of sling leg 3 through the left rear lift provision of the cradle. Place the correct link from Table 10-10 in the grab hook. Repeat with sling leg 4 and the right rear lift provision of the cradle.

**5.** Cluster and tie or tape (breakaway technique) all sling legs together on top of the shelter to prevent entanglement during hookup and lift-off.

*Figure 10-10. Cradle Mounted AN/TPQ-32A Radar Set*

## 10-12. NATO Air Base Satcom (NABS) Shelter Pallet, AN/TSC-93B (V) 2

**a. Applicability.** The following item in Table 10-11 is certified for all helicopters with suitable lift capacity by the US Army Natick Research, Development, and Engineering Center:

**Table 10-11. NATO Air Base Satcom (NABS) Shelter Pallet, AN/TSC-93B (V) 2**

| NOMENCLATURE | MAX WEIGHT (POUNDS) | SLING SET | LINK COUNT FRONT/REAR | RECOMMENDED AIRSPEED (KNOTS) |
|---|---|---|---|---|
| AN/TSC-93B (V) 2 Shelter Pallet | 5,751 | 10K | 3/3 | 90 |

**b. Materials.** The following materials are required to rig this load:

**(1)** Sling set (10,000-pound capacity).

**(2)** Tape, adhesive, pressure-sensitive, 2-inch wide roll.

**(3)** Cord, nylon, Type III, 550-pound breaking strength.

**(4)** Webbing, cotton, 1/4-inch, 80-pound breaking strength.

**c. Personnel.** Two persons can prepare and rig this load in 20 minutes.

**d. Procedures.** The following procedures apply to this load:

**(1) Preparation.** Prepare the load using the following steps:

**(a)** Secure all loose cables and equipment on the shelter pallet with tape or Type III nylon cord.

**(b)** Remove the cargo cover and stow it inside the shelter.

**(c)** Close and secure all doors, vents, and caps with tape or Type III nylon cord. All exhaust vents must be taped.

**(2) Rigging.** Rig the load according to the steps in Figure 10-11.

**(3) Hookup.** The hookup team stands on top of the shelter. The static wand person discharges the static electricity with the static wand. The hookup person places the apex fitting onto the aircraft cargo hook. The hookup team then moves clear of the load but remains close to the load as the helicopter removes slack from the sling legs. When successful hookup is assured, the hookup team quickly exits the area underneath the helicopter to the designated rendezvous point.

**(4) Derigging.** Derigging is the reverse of the preparation and rigging procedures in steps d (1) and d (2).

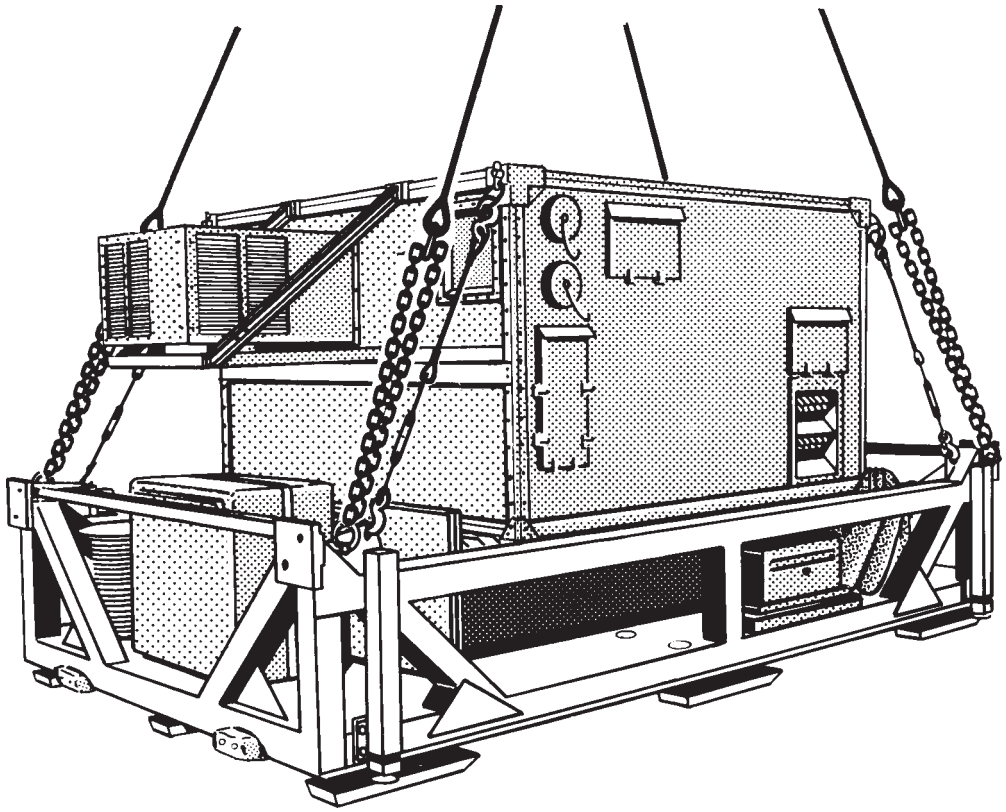

**RIGGING STEPS**

**1.** Position the apex fitting on top of the shelter. Route outer sling legs 1 and 2 to the front of the pallet (ECU end) and inner sling legs 3 and 4 to the rear. Sling legs 1 and 3 must be on the left side of the load.

**CAUTION**
**Do not use the lift provisions on the shelter.**

**2.** Loop the chain end of sling leg 1 through the left front lift provision located on the pallet. Place the correct link from Table 10-11 in the grab hook. Repeat with sling leg 2 and the right front lift provision.

**3.** Loop the chain end of sling leg 3 through the left rear lift provision located on the pallet. Place the correct link from Table 10-11 in the grab hook. Repeat with sling leg 4 and the right rear lift provision.

**4.** Cluster and tie or tape (breakaway technique) all sling legs together on top of the shelter to prevent entanglement during hookup and lift-off.

*Figure 10-11. NATO Air Base Satcom (NABS) Shelter Pallet, AN/TSC-93B (V) 2*

## 10-13. Refrigerator, Rigid Box without Refrigerator Unit

**a. Applicability.** The following item in Table 10-12 is certified for all helicopters with suitable lift capacity by the US Army Natick Research, Development, and Engineering Center:

**Table 10-12. Refrigerator, Rigid Box without Refrigerator Unit**

| NOMENCLATURE | MAX WEIGHT (POUNDS) | SLING SET | LINK COUNT FRONT/REAR | RECOMMENDED AIRSPEED (KNOTS) |
|---|---|---|---|---|
| Refrigerator, Rigid Box, TAMCN B1710, without Refrigerator Unit | 3,500 | 15K | 5/5 | 90 |

**b. Materials.** The following materials are required to rig this load:

**(1)** Sling set (15,000-pound capacity).

**(2)** Tape, adhesive, pressure-sensitive, 2-inch wide roll.

**(3)** Cord, nylon, Type III, 550-pound breaking strength.

**(4)** Webbing, cotton, 1/4-inch, 80-pound breaking strength.

**c. Personnel.** Two persons can prepare and rig this load in 10 minutes.

**d. Procedures.** The following procedures apply to this load:

**(1) Preparation.** Prepare the load using the following steps:

**(a)** Remove the refrigerator unit from inside the refrigerator box.

**(b)** Secure all equipment inside the box with tape or Type III nylon cord. Close and secure the door latch.

**(2) Rigging.** Rig the load according to the steps in Figure 10-12.

**(3) Hookup.** The hookup team stands on top of the shelter. The static wand person discharges the static electricity with the static wand. The hookup person places the apex fitting onto the aircraft cargo hook. The hookup team then moves clear of the load but remains close to the load as the helicopter removes slack from the sling legs. When successful hookup is assured, the hookup team quickly exits the area underneath the helicopter to the designated rendezvous point.

**(4) Derigging.** Derigging is the reverse of the preparation and rigging procedures in steps d (1) and d (2).

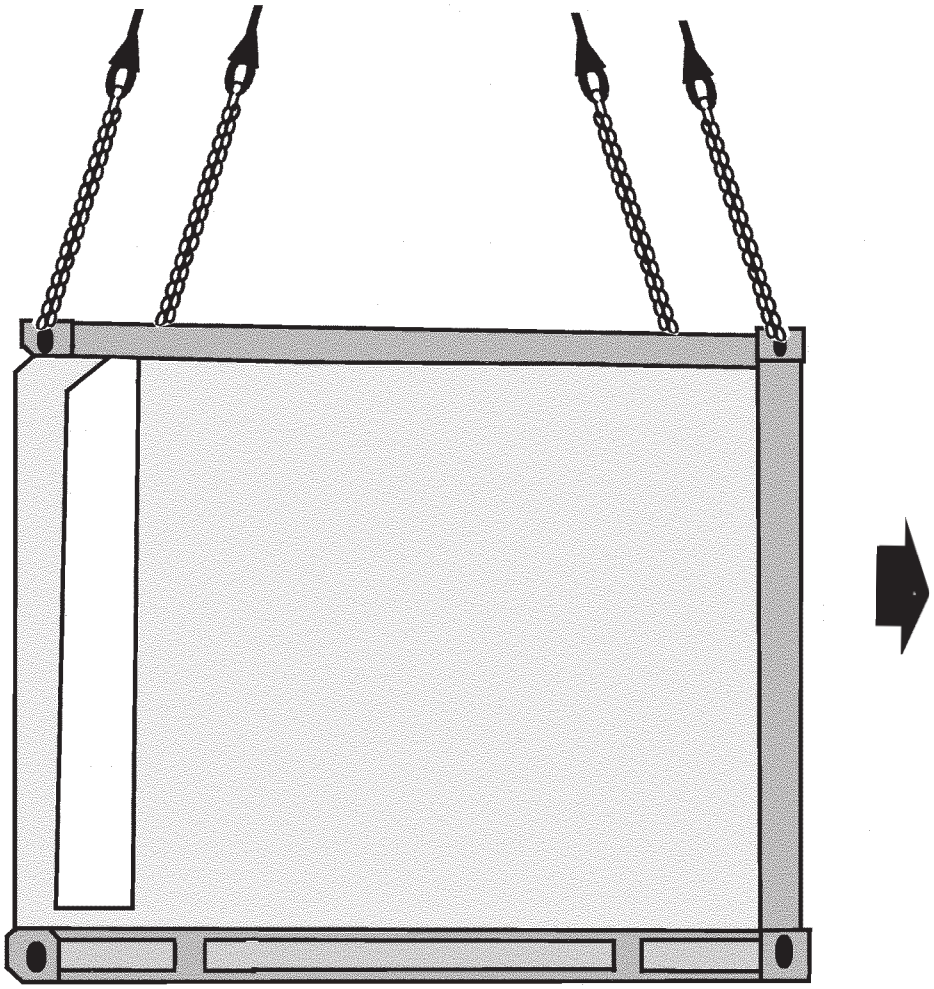

**RIGGING STEPS**

**1.** Position the web ring on top of the refrigerator box. Route outer sling legs 1 and 2 to the front of the box and inner sling legs 3 and 4 to the rear. Sling legs 1 and 3 must be on the left side of the load.

**2.** Loop the chain end of sling leg 1 through the left front lift provision. Place the correct link from Table 10-12 in the grab hook. Repeat with sling leg 2 and the right front lift provision.

**3.** Loop the chain end of sling leg 3 through the left rear lift provision. Place the correct link from Table 10-12 in the grab hook. Repeat with sling leg 4 and the right rear lift provision.

**4.** Cluster and tie or tape (breakaway technique) all sling legs together on top of the box to prevent entanglement during hookup and lift-off.

*Figure 10-12. Refrigerator, Rigid Box without Refrigerator Unit*

# CHAPTER 11

# CERTIFIED SINGLE-POINT RIGGING PROCEDURES FOR CONTAINERS

## 11-1. Introduction

This chapter contains rigging procedures for single-point lift of containers that have been certified for sling load. Each rigging procedure is found in a paragraph that includes a description of the load, materials required for rigging, and steps to complete the procedure. An applicability paragraph is also a part of each paragraph and identifies the certified loads. The certified single-point rigging procedures for containers are in this section. Paragraphs 11-2 through 11-11 give detailed instructions for rigging loads.

**NOTE: Reach Pendants may be used on all single point loads. A static discharge person is not required when using a Reach Pendant.**

## 11-2. Pershing II in Container

**a. Applicability.** The following items in Table 11-1 are certified for all helicopters with suitable lift capacity by the US Army Soldier Systems Center:

**Table 11-1. Pershing II in Container**

| NOMENCLATURE | MAX WEIGHT (POUNDS) | SLING SET | LINK COUNT FRONT/REAR | RECOMMENDED AIRSPEED (KNOTS) |
|---|---|---|---|---|
| Pershing II First Stage Section | 14,410 | 25K | 3/20 | 90 |
| Pershing II Second Stage Section | 10,158 | 25K | 3/13 | 110 |
| Pershing II Guidance and Control Adapter Section | 3,500 | 10K | 3/14 | 100 |
| Pershing II Radar Section | 1,708 | 10K | 3/3 | 70 |

**b. Materials.** The following materials are required to rig this load:

**(1)** Sling set (10,000- or 25,000-pound capacity) (as required).

**(2)** Tape, adhesive, pressure-sensitive, 2-inch wide roll.

**(3)** Cord, nylon, Type III, 550-pound breaking strength.

**(4)** Webbing, cotton, 1/4-inch, 80-pound breaking strength.

**c. Personnel.** Two persons can prepare and rig this load in 10 minutes.

**d. Procedures.** The following procedures apply to this load:

**(1) Preparation.** Prepare the load using the following steps:

**(a)** Ensure the container cover is securely fastened.

**(b)** Ensure the container skids and lift handles are serviceable.

**(2) Rigging.** Rig the load according to the steps in Figure 11-1.

**(3) Hookup.** The hookup team stands on top of the container. The static wand person discharges the static

electricity with the static wand. The hookup person places the apex fitting onto the aircraft cargo hook. The hookup team then moves clear of the load but remains close to the load as the helicopter removes slack from the sling legs. When successful hookup is assured, the hookup team quickly exits the area underneath the helicopter to the designated rendezvous point.

**(4) Derigging.** Derigging is the reverse of the preparation and rigging procedures in steps d (1) and d (2).

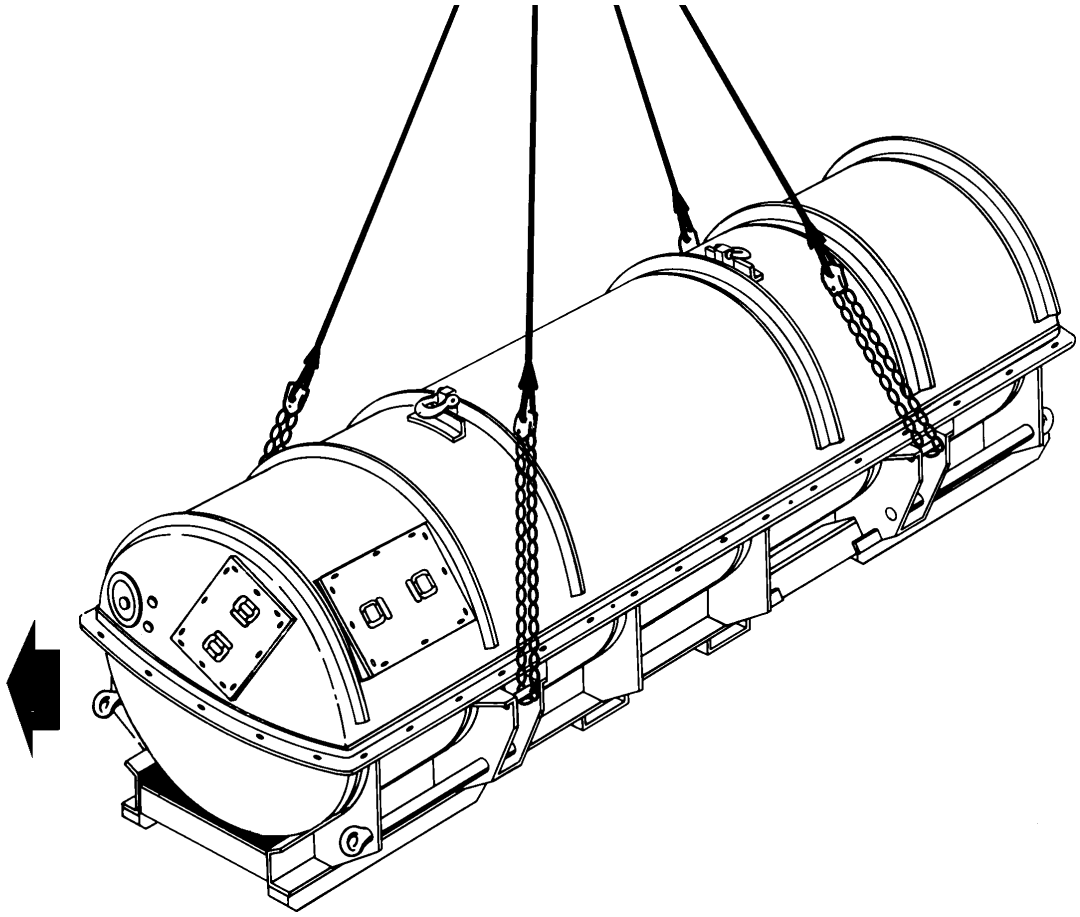

**RIGGING STEPS**

**1.** Position apex fitting on top of the container. Route outer sling legs 1 and 2 to the front of the container and inner sling legs 3 and 4 to the rear. Sling legs 1 and 3 must be on the left side of the load.

**2.** Loop the chain end of sling leg 1 through the left front lift handle. Place the correct link from Table 11-1 in the grab hook. Repeat with sling leg 2 on the right front lift provision.

**3.** Loop the chain end of sling leg 3 through the left rear lift handle. Place the correct link from Table 11-1 in the grab hook. Repeat with sling leg 4 on the right rear lift provision. Secure the excess chain with tape or Type III nylon cord.

**4.** Cluster and tie or tape (breakaway technique) all sling legs together on top of the container to prevent entanglement during hookup and lift-off.

*Figure 11-1. Pershing II in Container*

## 11-3. Shipping/Storage Containers

**a. Applicability.** The following items in Table 11-2 are certified for all helicopters with suitable lift capacity by the US Army Natick Research, Development, and Engineering Center:

**Table 11-2. Shipping/Storage Containers**

| NOMENCLATURE | MAX WEIGHT (POUNDS) | SLING SET | LINK COUNT FRONT/REAR | RECOMMENDED AIRSPEED (KNOTS) |
|---|---|---|---|---|
| ISU-60 (Loaded) | 11,650 | 25K | 3/3 | 80 |
| ISU-90 (Loaded) | 11,900 | 25K | 3/3 | 105 |
| ISU-90 (Empty) | 1,930 | 10K | 3/3 | 65 |

**b. Materials.** The following materials are required to rig this load:

**(1)** Sling set (10,000- or 25,000-pound capacity) (as required).

**(2)** Tape, adhesive, pressure-sensitive, 2-inch wide roll.

**(3)** Cord, nylon, Type III, 550-pound breaking strength.

**(4)** Webbing, cotton, 1/4-inch, 80-pound breaking strength.

**c. Personnel.** Two persons can prepare and rig this load in 10 minutes.

**d. Procedures.** The following procedures apply to this load:

**(1) Preparation.** Prepare the load using the following steps:

**(a)** Secure all cargo inside the container.

**(b)** Secure all doors in the secured and locked position.

**(2) Rigging.** Rig the load according to the steps in Figure 11-2.

**(3) Hookup.** The hookup team stands on top of the container. The static wand person discharges the static electricity with the static wand. The hookup person places the apex fitting onto the aircraft cargo hook. The hookup team then moves clear of the load but remains close to the load as the helicopter removes slack from the sling legs. When successful hookup is assured, the hookup team quickly exits the area underneath the helicopter to the designated rendezvous point.

**(4) Derigging.** Derigging is the reverse of the preparation and rigging procedures in steps d (1) and d (2).

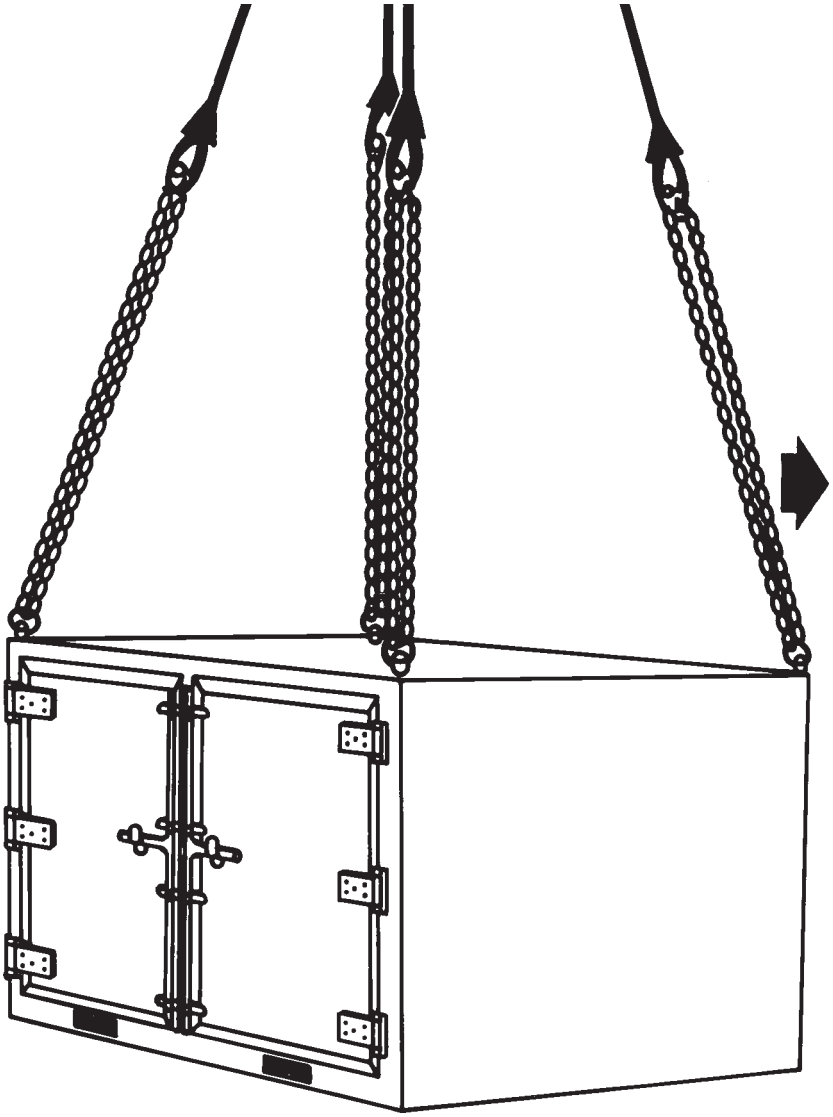

**RIGGING STEPS**

**1.** Position apex fitting on top of the container. Route outer sling legs 1 and 2 to the front of the container and inner sling legs 3 and 4 to the rear. Sling legs 1 and 3 must be on the left side of the load.

**2.** Loop the chain end of sling leg 1 through the left front lift provision. Place the correct link from Table 11-2 in the grab hook. Repeat with sling leg 2 on the right front lift provision.

**3.** Loop the chain end of sling leg 3 through the left rear lift provision. Place the correct link from Table 11-2 in the grab hook. Repeat with sling leg 4 on the right rear lift provision.

**4.** Cluster and tie or tape (breakaway technique) all sling legs together on top of the container to prevent entanglement during hookup and lift-off.

*Figure 11-2. Shipping/Storage Containers*

## 11-4. Army Missile Systems Enclosure Assembly Launch Pods (EALP), One Container

**a. Applicability.** The following items in Table 11-3 are certified for all helicopters with suitable lift capacity by the US Army Soldier Systems Center:

**Table 11-3. Army Missile Systems Enclosure Assembly Launch Pods, One Container**

| NOMENCLATURE | MAX WEIGHT (POUNDS) | SLING SET | LINK COUNT FRONT/REAR | RECOMMENDED AIRSPEED (KNOTS) |
|---|---|---|---|---|
| Multiple Launch Rocket System with Rocket Pod/Container (with Six Rockets) | 5,005 | 10K | 3/3 | 90 |
| Guided Missile Launch Assembly (GMLA) | 5,071 | 10K | 3/3 | 90 |

**b. Materials.** The following materials are required to rig this load:

**(1)** Sling set (10,000-pound capacity).

**(2)** Tape, adhesive, pressure-sensitive, 2-inch wide roll.

**(3)** Cord, nylon, Type III, 550-pound breaking strength.

**(4)** Webbing, cotton, 1/4-inch, 80-pound breaking strength.

**c. Personnel.** Two persons can prepare and rig this load in 15 minutes.

**d. Procedures.** The following procedures apply to this load:

**(1) Preparation.** Prepare the EALP for travel in accordance with standard procedures.

**(2) Rigging.** Rig the load according to the steps in Figure 11-3.

**NOTE: The firing end is considered to be the front of the load.**

**(3) Hookup.** The hookup team stands on top of the EALP . The static wand person discharges the static electricity with the static wand. The hookup person places the apex fitting onto the aircraft cargo hook. The hookup team then moves clear of the load but remains close to the load as the helicopter removes slack from the sling legs. When successful hookup is assured, the hookup team quickly exits the area underneath the helicopter to the designated rendezvous point.

**(4) Derigging.** Derigging is the reverse of the preparation and rigging procedures in steps d (1) and d (2).

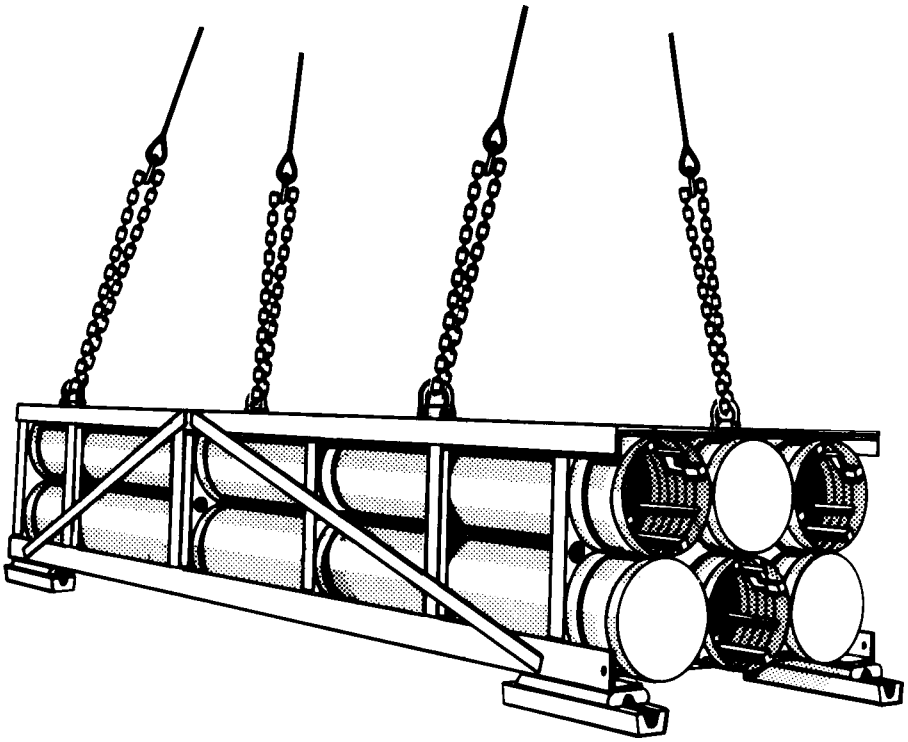

**RIGGING STEPS**

**1.** Position apex fitting on top of the EALP. Route outer sling legs 1 and 2 to the front of the EALP and inner sling legs 3 and 4 to the rear. Sling legs 1 and 3 must be on the left side of the load.

**2.** Loop the chain end of sling leg 1 through the left front lift provision. Place the correct link from Table 11-3 in the grab hook. Repeat with sling leg 2 on the right front lift provision.

**3.** Loop the chain end of sling leg 3 through the left rear lift provision. Place the correct link from Table 11-3 in the grab hook. Repeat with sling leg 4 on the right rear lift provision.

**4.** Cluster and tie or tape (breakaway technique) all sling legs together on top of the container to prevent entanglement during hookup and lift-off.

***Figure 11-3. Army Missile Systems Enclosure Assembly Launch Pods, One Container***

## 11-5. Army Missile Systems Enclosure Assembly Launch Pods (EALP), Two Containers

**a. Applicability.** The following items in Table 11-4 are certified for all helicopters with suitable lift capacity by the US Army Soldier Systems Center:

**Table 11-4. Army Missile Systems Enclosure Assembly Launch Pods (EALP), Two Containers**

| NOMENCLATURE | MAX WEIGHT (POUNDS) | SLING SET | LINK COUNT FRONT/REAR | RECOMMENDED AIRSPEED (KNOTS) |
|---|---|---|---|---|
| Multiple Launch Rocket System with Two Rocket Pods/Containers (with Six Rockets) | 10,010 | 25K | 3/3 | 85 |
| Two Enclosure Assembly Launch Pods, Guided Missile Launch Assembly | 10,142 | 25K | 3/3 | 85 |

**b. Materials.** The following materials are required to rig this load:

**(1)** Sling set (25,000-pound capacity).

**(2)** Tape, adhesive, pressure-sensitive, 2-inch wide roll.

**(3)** Cord, nylon, Type III, 550-pound breaking strength.

**(4)** Webbing, cotton, 1/4-inch, 80-pound breaking strength.

**(5)** Felt sheet, cattle hair, Type IV, 1/2-inch or suitable substitute.

**(6)** Tie-down strap, cargo, CGU-1/B (as required).

**c. Personnel.** Four persons can prepare and rig this load in 30 minutes.

**d. Procedures.** The following procedures apply to this load:

**(a)** Prepare the EALPs for travel in accordance with standard procedures.

**(b)** Stack the EALPs one on top of the other, with both EALPs facing the same direction.

**CAUTION**
**Do not mix the MLRS and the GMLA in the same load.**

**(c)** Lash the stack of EALPs together using the CGU-1/B tie-down straps. Two of the straps should run through both sets of lifting provisions on each end of the EALPs, to keep them aligned during flight. Evenly space the remaining two straps between the lifting provisions, running them around the EALPs. **DO NOT ROUTE THE STRAPS OVER THE ROCKET TUBES**. Pad all straps in the area where they contact the edges of the EALPs.

**(2) Rigging.** Rig the load according to the steps in Figure 11-4.

**NOTE: The firing end is considered the front of the load.**

**(3) Hookup.** The hookup team stands on top of the EALPs. The static wand person discharges the static electricity with the static wand. The hookup person places the apex fitting onto the aircraft cargo hook. The hookup team then moves clear of the load but remains close to the load as the helicopter removes slack from the sling legs. When successful hookup is assured, the hookup team quickly exits the area underneath the helicopter to the designated rendezvous point.

**(4) Derigging.** Derigging is the reverse of the preparation and rigging procedures in steps d (1) and d (2).

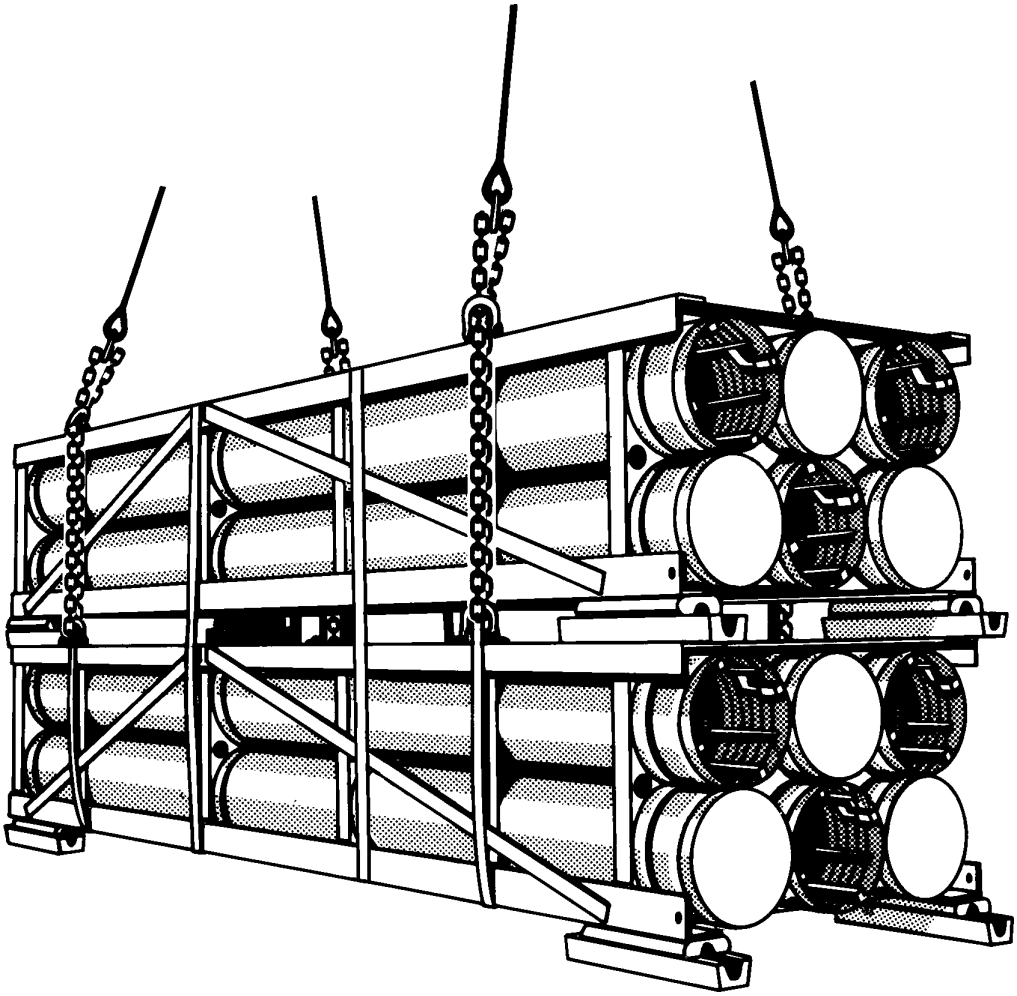

**RIGGING STEPS**

**1.** Position apex fitting on top of the EALPs. Route outer sling legs 1 and 2 to the front of the EALPs and inner sling legs 3 and 4 to the rear. Sling legs 1 and 3 must be on the left side of the load.

**2.** Loop the chain end of sling leg 1 through the left front lift provision on the top EALP and through the front lift provision on the bottom EALP. Thread it back through the front lift provision on the top EALP. Place the correct link from Table 11-4 in the grab hook. Repeat with sling leg 2 on the right front lift provision.

**3.** Loop the chain end of sling leg 3 through the left rear lift provision on the top EALP and through the rear lift provision on the bottom EALP. Thread it back through the rear lift provision on the top EALP. Place the correct link from Table 11-4 in the grab hook. Repeat with sling leg 4 on the right rear lift provision.

**4.** Cluster and tie or tape (breakaway technique) all sling legs together on top of the EALP to prevent entanglement during hookup and lift-off.

***Figure 11-4. Army Missile Systems Enclosure Assembly Launch Pods (EALP), Two Containers***

## 11-6. M1A1 Full-Up Power Pack (FUPP) Container

**a. Applicability.** The following item in Table 11-5 is certified for all helicopters with suitable lift capacity by the US Army Natick Research, Development, and Engineering Center:

**Table 11-5. M1A1 Full-Up Power Pack**

| NOMENCLATURE | MAX WEIGHT (POUNDS) | SLING SET | LINK COUNT FRONT/REAR | RECOMMENDED AIRSPEED (KNOTS) |
|---|---|---|---|---|
| M1A1 Full-Up Power Pack Container with Full-Up Power Pack (Metal or Fiberglass) | 13,620 | 25K | 3/10 | 110 |

**b. Materials.** The following materials are required to rig this load:

**(1)** Sling set (25,000-pound capacity).

**(2)** Tape, adhesive, pressure-sensitive, 2-inch wide roll.

**(3)** Cord, nylon, Type III, 550-pound breaking strength.

**(4)** Webbing, cotton, 1/4-inch, 80-pound breaking strength.

**(5)** Tie-down strap, cargo, CGU-1/B (as required).

**c. Personnel.** Two persons can prepare and rig this load in 15 minutes.

**d. Procedures.** The following procedures apply to this load:

**(a)** Secure all equipment inside the container with tape or Type III nylon cord.

**(b)** Close and secure all doors and vents with tape or Type III nylon cord.

**(2) Rigging.** Rig the load according to the steps in Figure 11-5.

**(3) Hookup.** The hookup team stands on top of the container. The static wand person discharges the static electricity with the static wand. The hookup person places the apex fitting onto the aircraft cargo hook. The hookup team then moves clear of the load but remains close to the load as the helicopter removes slack from the sling legs. When successful hookup is assured, the hookup team quickly exits the area underneath the helicopter to the designated rendezvous point.

**(4) Derigging.** Derigging is the reverse of the preparation and rigging procedures in steps d (1) and d (2).

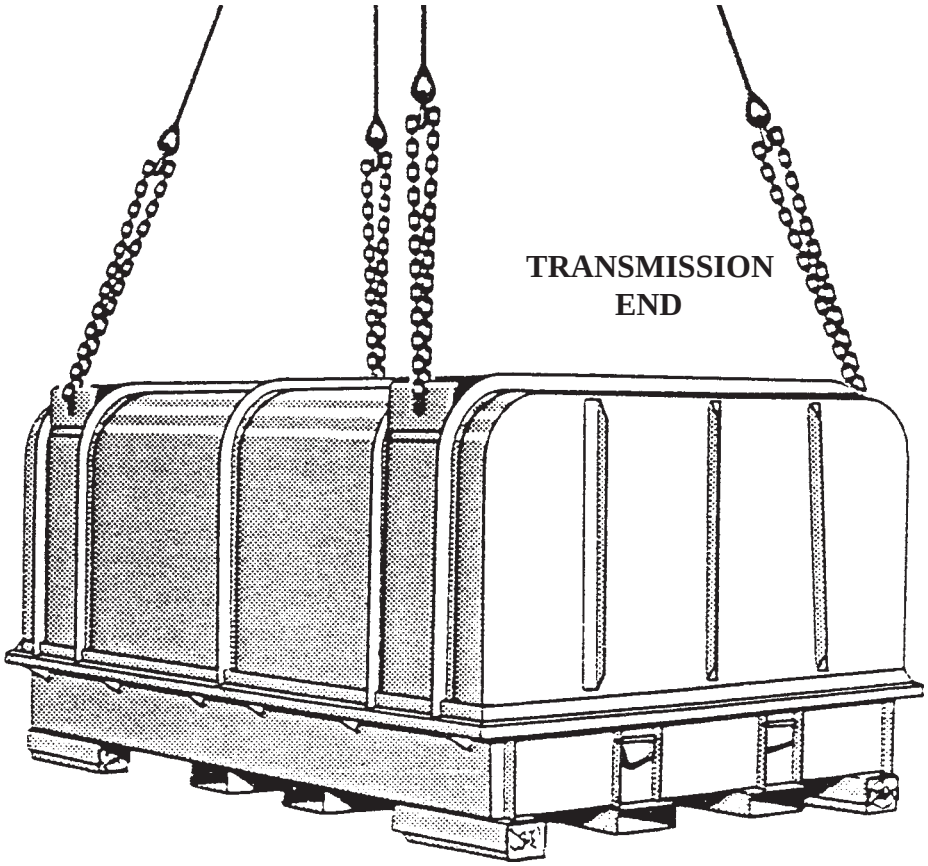


**RIGGING STEPS**

**1.** Position apex fitting on top of the container. Route outer sling legs 1 and 2 to the front of the container (transmission end) and inner sling legs 3 and 4 to the rear. Sling legs 1 and 3 must be on the left side of the load.

**2.** Loop the chain end of sling leg 1 through the left front lift provision. Place the correct link from Table 11-5 in the grab hook. Repeat with sling leg 2 on the right front lift provision.

**3.** Loop the chain end of sling leg 3 through the left rear lift provision. Place the correct link from Table 11-5 in the grab hook. Repeat with sling leg 4 on the right rear lift provision. Secure the excess chain with Type III nylon cord.

**4.** Cluster and tie or tape (breakaway technique) all sling legs together on top of the container to prevent entanglement during hookup and lift-off.

***Figure 11-4. M1A1 Full-Up Power Pack***

## 11-7. Field Medical Oxygen Generation/Distribution System (FMOGDS)

**a. Applicability.** The following items in Table 11-6 are certified for all helicopters with suitable lift capacity by the US Army Natick Research, Development, and Engineering Center:

**Table 11-6. Field Medical Oxygen Generation/Distribution System**

| NOMENCLATURE | MAX WEIGHT (POUNDS) | SLING SET | LINK COUNT FRONT/REAR | RECOMMENDED AIRSPEED (KNOTS) |
|---|---|---|---|---|
| Oxygen Generation/Distribution Module (OGDM) | 3,405 | 10K | 3/3 | 70 |
| Cylinder Filling Module (CFM) | 2,049 | 10K | 3/3 | 70 |

**b. Materials.** The following materials are required to rig this load:

**(1)** Sling set (10,000-pound capacity).

**(2)** Tape, adhesive, pressure-sensitive, 2-inch wide roll.

**(3)** Cord, nylon, Type III, 550-pound breaking strength.

**(4)** Webbing, cotton, 1/4-inch, 80-pound breaking strength.

**(5)** Tie-down strap, cargo, CGU-1/B (as required).

**c. Personnel.** Two persons can prepare and rig this load in 20 minutes.

**d. Procedures.** The following procedures apply to this load:

**(a)** Ensure all tools are properly stowed. Secure all loose equipment inside the container with tape or Type III nylon cord.

**(b)** Secure all doors and vents with tape. Secure all hoses and chains with tape or 1/4-inch cotton webbing.

**(2) Rigging.** Rig the load according to the steps in Figure 11-6.

**(3) Hookup.** The hookup team stands on top of the container. The static wand person discharges the static electricity with the static wand. The hookup person places the apex fitting onto the aircraft cargo hook. The hookup team then moves clear of the load but remains close to the load as the helicopter removes slack from the sling legs. When successful hookup is assured, the hookup team quickly exits the area underneath the helicopter to the designated rendezvous point.

**(4) Derigging.** Derigging is the reverse of the preparation and rigging procedures in steps d (1) and d (2).

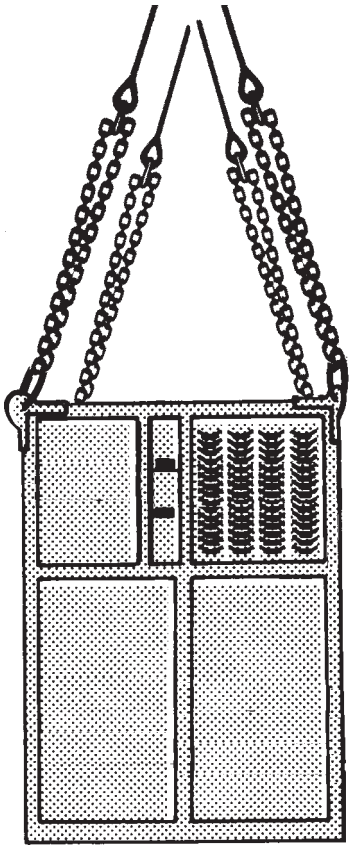

**RIGGING STEPS**

**1.** Position apex fitting on top of the container. Route outer sling legs 1 and 2 to the front of the container (side with the forklift entry holes) and inner sling legs 3 and 4 to the rear. Sling legs 1 and 3 must be on the left side of the load.

**2.** Loop the chain end of sling leg 1 through the left front lift provision. Place the correct link from Table 11-6 in the grab hook. Repeat with sling leg 2 on the right front lift provision.

**3.** Loop the chain end of sling leg 3 through the left rear lift provision. Place the correct link from Table 11-6 in the grab hook. Repeat with sling leg 4 on the right rear lift provision.

**4.** Cluster and tie or tape (breakaway technique) all sling legs together on top of the container to prevent entanglement during hookup and lift-off.

***Figure 11-6. Field Medical Oxygen Generation/Distribution System***

## 11-8. Field Medical Oxygen Generation/Distribution System (FMOGDS) (Combined)

**a. Applicability.** The following item in Table 11-7 is certified for all helicopters with suitable lift capacity by the US Army Natick Research, Development, and Engineering Center:

**Table 11-7. Field Medical Oxygen Generation/Distribution System (Combined)**

| NOMENCLATURE | MAX WEIGHT (POUNDS) | SLING SET | LINK COUNT FRONT/REAR | RECOMMENDED AIRSPEED (KNOTS) |
|---|---|---|---|---|
| Oxygen Generation Distribution Module and Cylinder Filling Module | 5,454 | 10K | 3/20/3 | 85 |

**b. Materials.** The following materials are required to rig this load:

**(1)** Sling set (10,000-pound capacity) with two additional chain legs.

**(2)** Tape, adhesive, pressure-sensitive, 2-inch wide roll.

**(3)** Cord, nylon, Type III, 550-pound breaking strength.

**(4)** Webbing, cotton, 1/4-inch, 80-pound breaking strength.

**(5)** Tie-down strap, cargo, CGU-1/B (as required).

**(6)** Lumber, 2 x 4 x 72-inch (4 each **).**

**c. Personnel.** Two persons can prepare and rig this load in 20 minutes.

**d. Procedures.** The following procedures apply to this load:

**(a)** Ensure all tools are properly stored. Secure all loose equipment inside the container with tape or Type III nylon cord.

**(b)** Secure all doors and vents with tape. Secure all hoses and chains with tape or 1/4-inch cotton webbing.

**(c)** Position the units together with the "A" sides facing each other.

**(d)** Cut slots in four 2 x 4 x 72-inch pieces of lumber to keep the CGU-1/B tie-down straps from sliding.

**(e)** Place the 2 x 4 x 72-inch pieces of lumber between the OGMD and the CFM as dunnage.

**(2) Rigging.** Rig the load according to the steps in Figure 11-7.

**(3) Hookup.** The hookup team stands on top of the container. The static wand person discharges the static electricity with the static wand. The hookup person places the apex fitting onto the aircraft cargo hook. The hookup team then moves clear of the load but remains close to the load as the helicopter removes slack from the sling legs. When successful hookup is assured, the hookup team quickly exits the area underneath the helicopter to the designated rendezvous point.

**(4) Derigging.** Derigging is the reverse of the preparation and rigging procedures in steps d (1) and d (2).

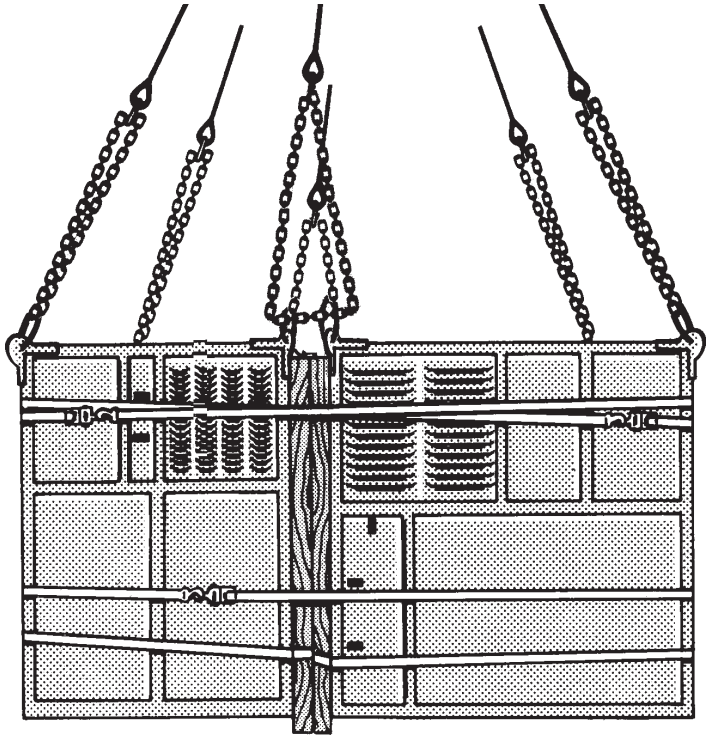

**RIGGING STEPS**

**1.** Configure a six leg sling set.

**2.** Attach two (2) 2 x 4 x 72-inch pieces of lumber to the "A" side of each unit using the CGU-1/B tie-down straps. Ensure the straps are routed horizontally around the unit and through the slots in the lumber.

**3.** Strap OGDM and CFM together using the tiedown straps, two fastenings evenly spaced around the sides. Fasten the straps together as necessary to span the two pieces of equipment.

**4.** Position apex fitting on top of the units. Route outer sling legs 1 and 2 to the front of the OGDM. Route inner sling legs 3 and 4 to the rear of the CFM and the middle sling legs 5 and 6 to the interface of the OGDM and the CFM. Sling legs 1, 3, and 5 must be on the left side of the load.

**5.** Route the chain end of sling leg 1 through the left front lift provision located on the front of the OGDM. Place the correct link from Table 11 -7 in the grab hook. Repeat with sling leg 2 on the right front lift provision.

**6.** Route the chain end of sling leg 3 through the left rear lift provision located on the rear of the CFM. Place the correct link from Table 11 -7 in the grab hook. Repeat with sling leg 4 on the right rear lift provision.

**7.** Route the chain end of sling leg 5 through the left lifting provision on the interfacing "A" sides of the OGDM and the CFM. Place the correct link from Table 11-7 in the grab hook. Repeat with sling leg 6 and the right lifting provision on the interfacing "A" sides of the OGDM and the CFM. Secure the excess chain with Type III nylon cord.

**8.** Cluster and tie or tape (breakaway technique) all sling legs together on top of the ODGM and CFM to prevent entanglement during hookup and lift-off.

***Figure 11-7. Field Medical Oxygen Generation/Distribution System (Combined)***

## 11-9. Distributed Explosive Technology (DET) System, Array Container

**a. Applicability.** The following item in Table 11-8 is certified for all helicopters with suitable lift capacity by the US Army Soldier Systems Center:

**Table 11-8. Distributed Explosive Technology (DET) System, Array Container**

| NOMENCLATURE | MAX WEIGHT (POUNDS) | SLING SET | LINK COUNT FRONT/REAR | RECOMMENDED AIRSPEED (KNOTS) |
|---|---|---|---|---|
| Distributed Explosive Technology (DET) System, Array Container | 4,000 | Navy MK105 O Sling Assembly | N/A | 90 |

**b. Materials.** The following materials are required to rig this load:

**(1)** Sling set, Navy MK105 O Sling Assembly with 91-inch or longer leg assembly.

**(2)** Tape, adhesive, pressure-sensitive, 2-inch wide roll.

**(3)** Cord, nylon, Type III, 550-pound breaking strength.

**c. Personnel.** Two persons can prepare and rig this load in 10 minutes.

**d. Procedures.** The following procedures apply to this load:

**(1) Preparation.** Prepare the load by taping the handles on the sides of the container.

**(2) Rigging.** Rig the load according to the steps in Figure 11-8.

**(3) Hookup.** The hookup team stands on top of the container. The static wand person discharges the static electricity with the static wand. The hookup person places the apex fitting onto the aircraft cargo hook. The hookup team then moves clear of the load but remains close to the load as the helicopter removes slack from the sling legs. When successful hookup is assured, the hookup team quickly exits the area underneath the helicopter to the designated rendezvous point.

**(4) Derigging.** Derigging is the reverse of the preparation and rigging procedures in steps d (1) and d (2).

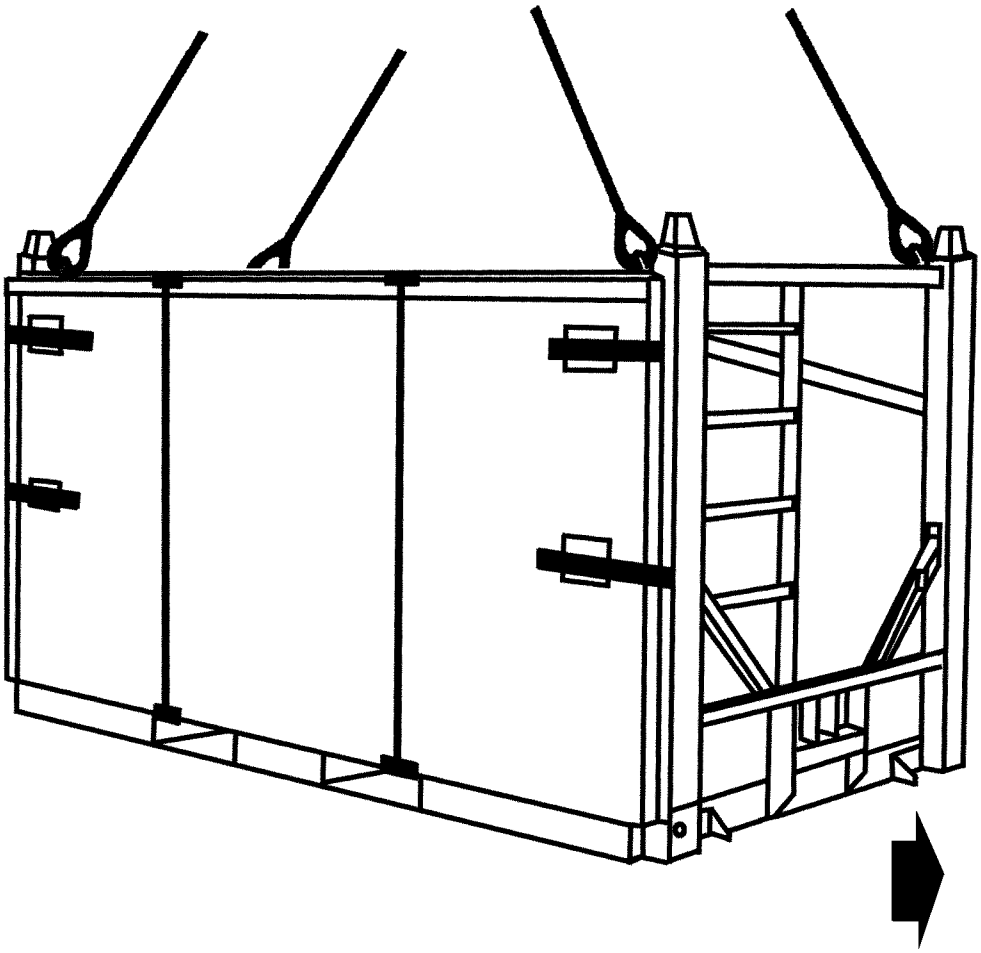

**RIGGING STEPS**

**1.** Position apex fitting on top of the container. Route outer sling legs 1 and 2 to the front of the container. Route inner sling legs 3 and 4 to the rear of the container. Sling legs 1and 3 must be on the left side of the load.

**2.** Attach the hook on the end of each sling leg to the respective lift provision located at the top corners of the container.

**3.** Secure the sling leg hooks in the closed position with Type III nylon cord.

***Figure 11-8. Distributed Explosive Technology (DET) System, Array Container***

## 11-10. Distributed Explosive Technology (DET) System, Landing Craft, Air Cushioned (LCAC), Landing Interface Kit (LIK) Container, Single

**a. Applicability.** The following item in Table 11-9 is certified for all helicopters with suitable lift capacity by the US Army Soldier Systems Center:

**Table 11-9. Distributed Explosive Technology (DET) System, Landing Craft, Air Cushioned (LCAC), Landing Interface Kit (LIK) Container, Single**

| NOMENCLATURE | MAX WEIGHT (POUNDS) | SLING SET | LINK COUNT FRONT/REAR | RECOMMENDED AIRSPEED (KNOTS) |
|---|---|---|---|---|
| Distributed Explosive Technology (DET) System, Landing Craft, Air Cushioned (LCAC), Landing Interface Kit (LIK) Container | 1,550 | Navy MK105 O Sling Assembly | N/A | 80 |

**b. Materials.** The following materials are required to rig this load:

**(1)** Sling set, Navy MK105 O Sling Assembly with 91-inch or longer leg assembly.

**(2)** Cord, nylon, Type III, 550-pound breaking strength.

**c. Personnel.** Two persons can prepare and rig this load in 10 minutes.

**d. Procedures.** The following procedures apply to this load:

**(1) Preparation.** Prepare the load by placing a strap over each end of the LIK container and attaching it to the platform in accordance with manufacturer's instructions.

**(2) Rigging.** Rig the load according to the steps in Figure 11-9.

**(3) Hookup.** The hookup team stands on top of the container. The static wand person discharges the static electricity with the static wand. The hookup person places the apex fitting onto the aircraft cargo hook. The hookup team then moves clear of the load but remains close to the load as the helicopter removes slack from the sling legs. When successful hookup is assured, the hookup team quickly exits the area underneath the helicopter to the designated rendezvous point.

**(4) Derigging.** Derigging is the reverse of the preparation and rigging procedures in steps d (1) and d (2).

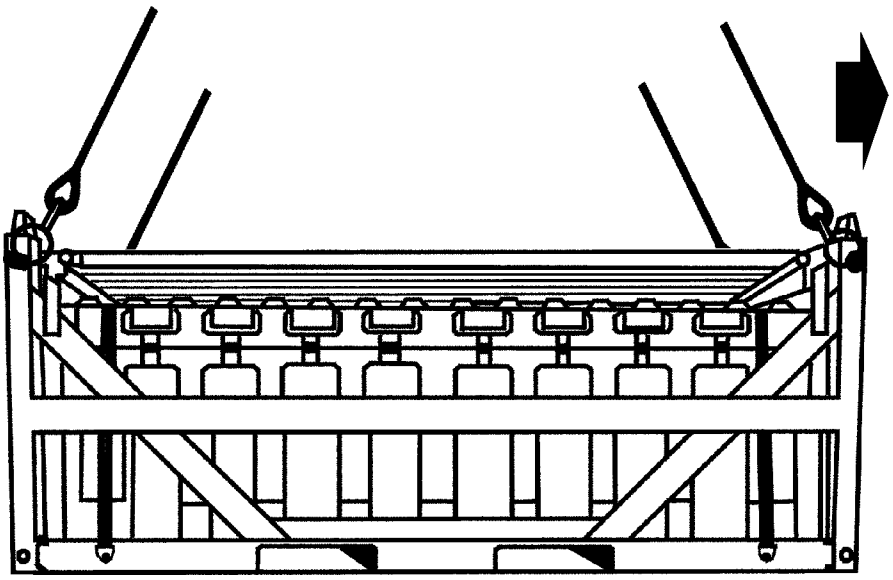

**RIGGING STEPS**

**1.** Position apex fitting on top of the container. Route outer sling legs 1 and 2 to the front of the container. Route inner sling legs 3 and 4 to the rear of the container. Sling legs 1and 3 must be on the left side of the load.

**2.** Attach the hook on the end of each sling leg to the respective lift provision located at the top corners of the container.

**3.** Secure the sling leg hooks in the closed position with Type III nylon cord.

***Figure 11-9. Distributed Explosive Technology (DET) System, Landing Craft, Air Cushioned (LCAC), Landing Interface Kit (LIK) Container, Single***

## 11-11. Distributed Explosive Technology (DET) System, Landing Craft, Air Cushioned (LCAC), Landing Interface Kit (LIK) Container, Doubled, Stacked

**a. Applicability.** The following item in Table 11-10 is certified for all helicopters with suitable lift capacity by the US Army Soldier Systems Center:

**Table 11-10. Distributed Explosive Technology (DET) System, Landing Craft, Air Cushioned (LCAC), Landing Interface Kit (LIK) Container, Doubled, Stacked**

| NOMENCLATURE | MAX WEIGHT (POUNDS) | SLING SET | LINK COUNT FRONT/REAR | RECOMMENDED AIRSPEED (KNOTS) |
|---|---|---|---|---|
| Distributed Explosive Technology (DET) System, Landing Craft, Air Cushioned (LCAC), Landing Interface Kit (LIK) Container, Doubled, Stacked | 2,400 | Navy MK105 O Sling Assembly | N/A | 85 |

**b. Materials.** The following materials are required to rig this load:

**(1)** Sling set, Navy MK105 O Sling Assembly with 91-inch or longer leg assembly.

**(2)** Cord, nylon, Type III, 550-pound breaking strength.

**c. Personnel.** Two persons can prepare and rig this load in 10 minutes.

**d. Procedures.** The following procedures apply to this load:

**(1) Preparation.** Prepare the load using the following steps:

**(a)** Place a strap over each end of the LIK container and attach it to the platform in accordance with manufacturer's instructions.

**(b)** Ensure the containers are secured together one on top of the other according to the manufacturer's instructions.

**(c)** Tie the bottom container lift provisions down to a point on the load with Type III nylon cord.

**(2) Rigging.** Rig the load according to the steps in Figure 11-10.

**(3) Hookup.** The hookup team stands on top of the container. The static wand person discharges the static electricity with the static wand. The hookup person places the apex fitting onto the aircraft cargo hook. The hookup team then moves clear of the load but remains close to the load as the helicopter removes slack from the sling legs. When successful hookup is assured, the hookup team quickly exits the area underneath the helicopter to the designated rendezvous point.

**(4) Derigging.** Derigging is the reverse of the preparation and rigging procedures in steps d (1) and d (2).

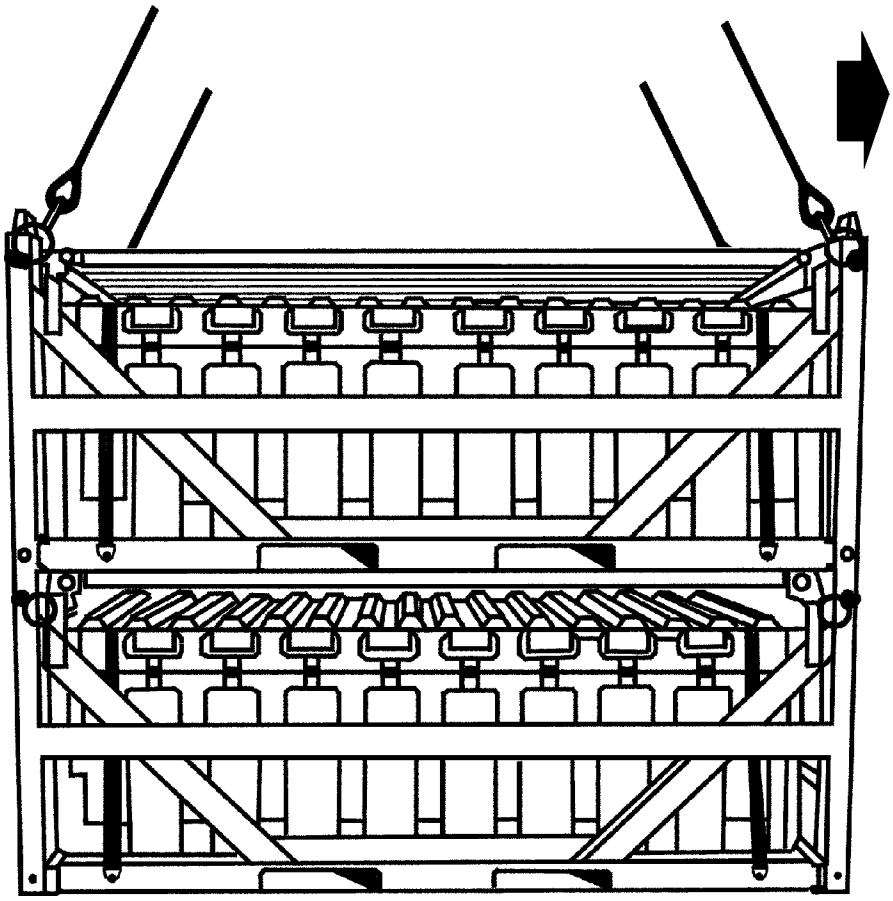

**RIGGING STEPS**

**1.** Position apex fitting on top of the container. Route outer sling legs 1 and 2 to the front of the container. Route inner sling legs 3 and 4 to the rear of the container. Sling legs 1and 3 must be on the left side of the load.

**2.** Attach the hook on the end of each sling leg to the respective lift provision located at the top corners of the container.

**3.** Secure the sling leg hooks in the closed position with Type III nylon cord.

***Figure 11-10. Distributed Explosive Technology (DET) System, Landing Craft, Air Cushioned (LCAC), Landing Interface Kit (LIK) Container, Double Stacked***

# CHAPTER 12

# CERTIFIED SINGLE-POINT RIGGING PROCEDURES FOR RADAR AND SATELLITE EQUIPMENT

## 12-1. Introduction

This chapter contains rigging procedures for single-point lift of radar and satelite equipment that has been certified for sling load. Each rigging procedure is found in a paragraph that includes a description of the load, materials required for rigging, and steps to complete the procedure. An applicability paragraph is also a part of each paragraph and identifies the certified loads. The certified single-point rigging procedures for radar and satellite equipment are in this section. Paragraphs 12-2 through 12-12 give detailed instructions for rigging loads.

**NOTE: Reach Pendants may be used on all single point loads. A static discharge person is not required when using a Reach Pendant.**

## 12-2. AN/TPQ-37 Artillery-Loading Radar Set (Firefinder)

**a. Applicability.** The following item in Table 12-1 is certified for all helicopters with suitable lift capacity by the US Army Soldier Systems Center:

**Table 12-1. AN/TPQ-37 Artillery-Loading Radar Set (Firefinder)**

| NOMENCLATURE | MAX WEIGHT (POUNDS) | SLING SET | LINK COUNT FRONT/REAR | RECOMMENDED AIRSPEED (KNOTS) |
|---|---|---|---|---|
| AN/TPQ-37 Artillery-Loading Radar Set (Firefinder) | 10,800 | 24K | 68/5 | 90 |

**b. Materials.** The following materials are required to rig this load:

**(1)** Sling set (25,000-pound capacity).

**(2)** Tape, adhesive, pressure-sensitive, 2-inch wide roll.

**(3)** Cord, nylon, Type III, 550-pound breaking strength.

**(4)** Webbing, cotton, 1/4-inch, 80-pound breaking strength.

**(5)** Felt sheet, cattle hair, Type IV, 1/2-inch or suitable substitute.

**(6)** Ladder.

**c. Personnel.** Two persons can prepare and rig this load in 30 minutes.

**d. Procedures.** The following procedures apply to this load:

**(1) Preparation.** Prepare the load using the following steps:

**(a)** Antenna unit should be configured for march order. If the antenna unit is mounted on its transport trailer, it must be removed for sling loading. If the trailer is to accompany the unit, it must be rigged and moved as a separate load.

**(b)** Ensure the maintenance tent frame and cover are stowed and secured in their proper position.

**(c)** Ensure all cover panels, cabinet doors, and vents are installed and secured.

**(d)** Secure all loose items with Type III nylon cord.

**(e)** Ensure the rear door is closed and secured with the locking handle. Door rods must be secured in their clips.

**(f)** Ensure the antenna transport cover is secured tightly to the lacing brackets with bungee cord. If necessary, secure the antenna with additional nylon cord.

**(2) Rigging.** Rig the load according to the steps in Figure 12-1.

**CAUTION**
**Do not stand on top of the load. Use the ladder to connect the sling legs to the load.**

**(3) Hookup.** The hookup team remains close to the load as the helicopter removes slack from the sling legs. When successful hookup is assured, the hookup team quickly exits the area underneath the helicopter to the designated rendezvous point.

**NOTE: Hookup is accomplished by the flight engineer using a cargo-hook loading pole (Shepard's Hook). Ensure the helicopter crew is informed of this in advance.**

**(4) Derigging.** Derigging is the reverse of the preparation and rigging procedures in steps d (1) and d (2).

**NOTE: Advise the pilot to hover to one side before releasing the apex fitting from the cargo hook .**

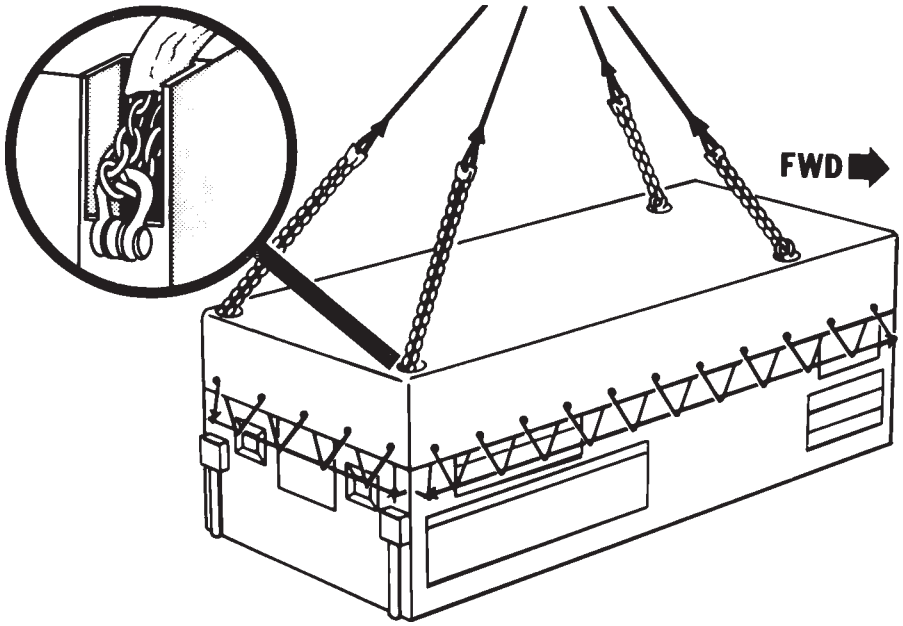


**RIGGING STEPS**

**1.** Open the access holes in the antenna transport cover as necessary to reach the lifting rings.

**2.** Rotate the antenna tie-down bolt ratchet handles toward the center of the trailer to prevent sling interference.

**3.** Position apex fitting on top of the load. Route outer sling legs 1 and 2 to the front of the unit and inner sling legs 3 and 4 to the rear (door end). Sling legs 1 and 3 must be on the left side of the load.

**4.** Loop the chain end of sling leg 1 through the left front lift ring. Place the correct link from Table 12-1 in the grab hook. Repeat with sling leg 2 on the right front lift provision. Secure the excess chain with Type III nylon cord.

**5.** Loop the chain end of sling leg 3 through the left rear lift ring. Ensure the chain is routed through the slot on the top of the corner post. Place the correct link from Table 12-1 in the grab hook. Repeat with sling leg 4 on the right rear lift ring. Pad the chain legs where they contact the top of the corner post. Secure the padding with tape or Type III nylon cord.

**6.** Close and securely fasten the opening in the rear of the antenna transport cover.

**7.** Cluster and tie or tape (breakaway technique) all sling legs together on top of the unit to prevent entanglement during hookup and lift-off.

*Figure 12-1. AN/TPQ-37 Artillery-Loading Radar Set (Firefinder)*

## 12-3. AN/TMQ-31 Radio Direction Finder

**a. Applicability.** The following item in Table 12-2 is certified for all helicopters with suitable lift capacity by the US Army Natick Research, Development, and Engineering Center:

**Table 12-2. AN/TMQ-31 Radio Direction Finder**

| NOMENCLATURE | MAX WEIGHT (POUNDS) | SLING SET | LINK COUNT FRONT/REAR | RECOMMENDED AIRSPEED (KNOTS) |
|---|---|---|---|---|
| AN/TMQ-31 Radio Direction Finder, Pedestal Mounted on M103A3 Trailer | 5,010 | 10K | 3/22 | 90 |

**b. Materials.** The following materials are required to rig this load:

**(1)** Sling set (10,000-pound capacity).

**(2)** Tape, adhesive, pressure-sensitive, 2-inch wide roll.

**(3)** Cord, nylon, Type III, 550-pound breaking strength.

**(4)** Webbing, cotton, 1/4-inch, 80-pound breaking strength.

**(5)** Felt sheet, cattle hair, Type IV, 1/2-inch or suitable substitute.

**c. Personnel.** Two persons can prepare and rig this load in 30 minutes.

**d. Procedures.** The following procedures apply to this load:

**(1) Preparation.** Prepare the load using the following steps:

**(a)** Place the radar set in the travel mode.

**(b)** Secure the air hoses, safety chains, and intervehicular cable to the tongue of the trailer with tape or Type III nylon cord.

**(c)** Engage the trailer hand brakes.

**(d)** Remove the canvas cover and secure it on top of the ladder with Type III nylon cord.

**(e)** Fold the canvas bows down and secure them to the trailer deck with Type III nylon cord.

**(2) Rigging.** Rig the load according to the steps in Figure 12-2.

**(3) Hookup.** The hookup team stands on the platform to the rear of the radar. The static wand person discharges the static electricity with the static wand. The hookup person places the apex fitting onto the aircraft cargo hook. The hookup team then moves clear of the load but remains close to the load as the helicopter removes slack from the sling legs. When successful hookup is assured, the hookup team quickly exits the area underneath the helicopter to the designated rendezvous point.

**(4) Derigging.** Derigging is the reverse of the preparation and rigging procedures in steps d (1) and d (2).

**NOTE: Advise the pilot to hover to one side before releasing the apex fitting from the cargo hook .**

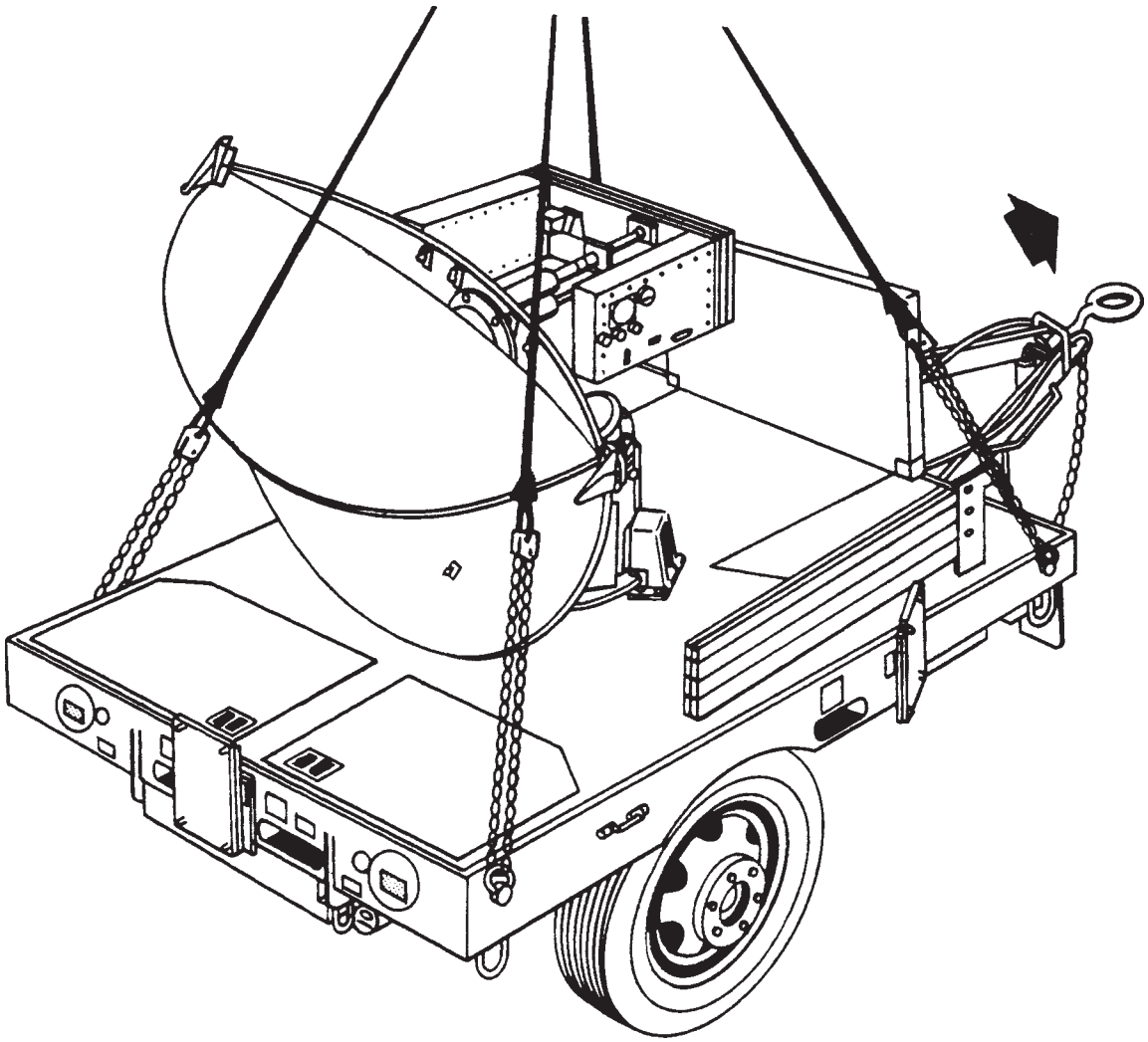

**RIGGING STEPS**

**1.** Position apex fitting on top of the trailer. Route outer sling legs 1 and 2 to the front of the trailer and inner sling legs 3 and 4 to the rear. Sling legs 1 and 3 must be on the left side of the load.

**2.** Loop the chain end of sling leg 1 through the left front lift ring located on the front left corner of the trailer. Place the correct link from Table 12-2 in the grab hook. Repeat with sling leg 2 on the right front lift provision.

**3.** Loop the chain end of sling leg 3 through the left rear lift ring located on the left rear corner of the trailer. Place the correct link from Table 12-2 in the grab hook. Repeat with sling leg 4 on the right rear lift ring. Secure the excess chain with tape or Type III nylon cord.

**4.** Cluster and tie or tape (breakaway technique) all sling legs together on top of the unit to prevent entanglement during hookup and lift-off.

*Figure 12-2. AN/TMQ-31 Radio Direction Finder*

## 12-4. AN/TPQ-36 Firefinder Antenna Radar Set

**a. Applicability.** The following item in Table 12-3 is certified for all helicopters with suitable lift capacity by the US Army Natick Research, Development, and Engineering Center:

**Table 12-3. AN/TPQ-36 Firefinder Antenna Radar Set**

| NOMENCLATURE | MAX WEIGHT (POUNDS) | SLING SET | LINK COUNT FRONT/REAR | RECOMMENDED AIRSPEED (KNOTS) |
|---|---|---|---|---|
| AN/TPQ-36 Firefinder Antenna Radar Set on M103A1 Trailer | 4,110 | 10K | 16/11 | 110 |

**b. Materials.** The following materials are required to rig this load:

**(1)** Sling set (10,000-pound capacity).

**(2)** Multiloop line, 9-foot, Type XXVI, nylon (4 each).

**(3)** Tape, adhesive, pressure-sensitive, 2-inch wide roll.

**(4)** Cord, nylon, Type III, 550-pound breaking strength.

**(5)** Webbing, cotton, 1/4-inch, 80-pound breaking strength.

**(6)** Clevis assembly, medium (2 each).

**(7)** Felt sheet, cattle hair, Type IV, 1/2-inch or suitable substitute.

**c. Personnel.** Two persons can prepare and rig this load in 20 minutes.

**d. Procedures.** The following procedures apply to this load:

**(1) Preparation.** Prepare the load using the following steps:

**(a)** Engage the trailer hand brakes.

**(b)** Close and secure the doors with Type III nylon cord.

**(c)** Place the radar set in the travel mode.

**(d)** Secure the cover on the antenna.

**(e)** Attach a medium clevis to each rear lift points.

**(2) Rigging.** Rig the load according to the steps in Figure 12-3.

**NOTE: The radar panels cannot support any extra weight.**

**(3) Hookup.** The hookup team stands on the fenders of the unit. The static wand person discharges the static electricity with the static wand. The hookup person places the apex fitting onto the aircraft cargo hook. The hookup team then moves clear of the load but remains close to the load as the helicopter removes slack from the sling legs. When successful hookup is assured, the hookup team quickly exits the area underneath the helicopter to the designated rendezvous point.

**(4) Derigging.** Derigging is the reverse of the preparation and rigging procedures in steps d (1) and d (2).

**NOTE: Advise the pilot to hover to one side before releasing the apex fitting from the cargo hook .**

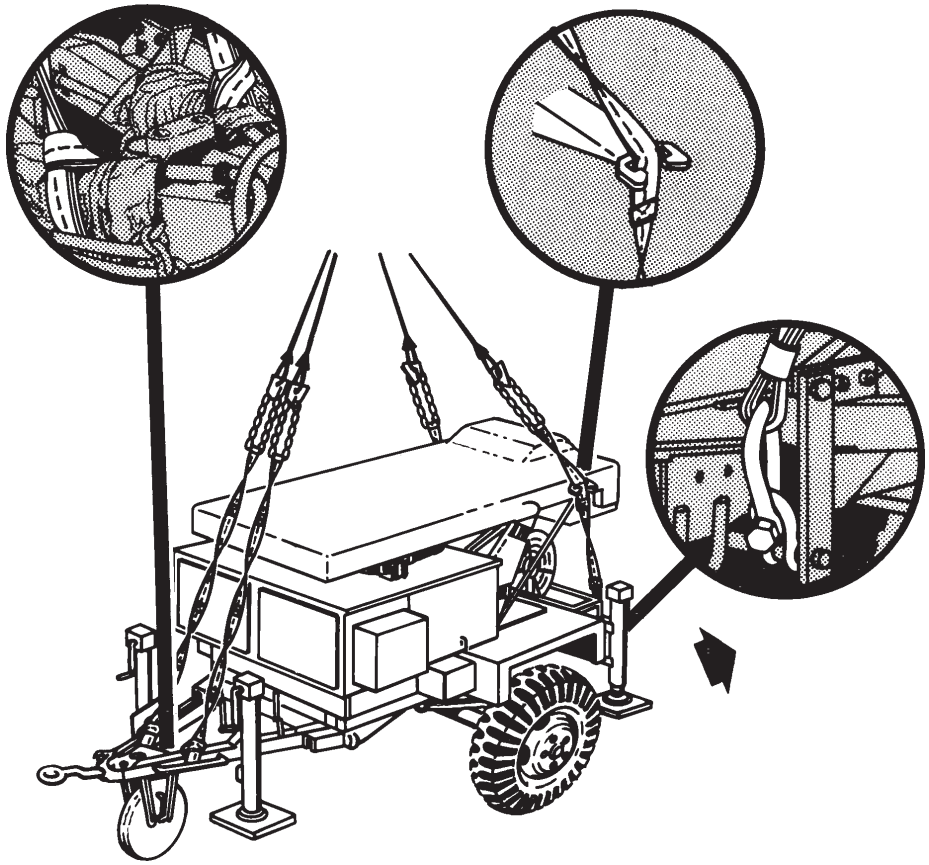

**RIGGING STEPS**

**1.** Connect a 9-foot multiloop line to the left rear clevis. Place the multiloop line in the sling guide of the antenna, pull up until tight, and tape the line to the sling guide. Repeat the procedure on the right side.

**2.** Wrap the left side of the A-frame, aft of the lunette, with padding and secure it in place with tape. Choker-hitch a 9-foot multiloop line around the padded area. Repeat the procedure on the right side.

**3.** Position apex fitting on top of the trailer (not on top of the radar panel). Route outer sling legs 1 and 2 to the front of the trailer and inner sling legs 3 and 4 to the rear. Sling legs 1 and 3 must be on the left side of the load.

**4.** Loop the chain end of sling leg 1 through the multiloop line attached to the left side of the tongue. Place the correct link from Table 12-3 in the grab hook. Repeat with sling leg 2 on the right front lift provision. Secure the excess chain with tape or Type III nylon cord.

**5.** Loop the chain end of sling leg 3 through the multiloop line attached to the left rear lift provision. Place the correct link from Table 12-3 in the grab hook. Repeat with sling leg 4 on the right rear lift provision. Secure the excess chain with tape or Type III nylon cord.

**6.** Cluster and tie or tape (breakaway technique) all sling legs together on top of the unit to prevent entanglement during hookup and lift-off.

*Figure 12-3. AN/TPQ-36 Firefinder Antenna Radar Set*

## 12-5. AN/TPQ-36 Firefinder II

**a. Applicability.** The following item in Table 12-4 is certified for all helicopters with suitable lift capacity by the US Army Natick Research, Development, and Engineering Center:

**Table 12-4. AN/TPQ-36 Firefinder II**

| NOMENCLATURE | MAX WEIGHT (POUNDS) | SLING SET | LINK COUNT FRONT/REAR | RECOMMENDED AIRSPEED (KNOTS) |
|---|---|---|---|---|
| Firefinder II, AN/TPQ-36 Block II | 9,673 | 25K | 11/3 | 120 |

**b. Materials.** The following materials are required to rig this load:

**(1)** Sling set (25,000-pound capacity) with four additional chain lengths and coupling links.

**(2)** Tape, adhesive, pressure-sensitive, 2-inch wide roll.

**(3)** Cord, nylon, Type III, 550-pound breaking strength.

**(4)** Webbing, cotton, 1/4-inch, 80-pound breaking strength.

**(5)** Tie-down straps, cargo, CGU-1/B (2 each).

**(6)** Felt sheet, cattle hair, Type IV, 1/2-inch or suitable substitute.

**(7)** Spreader bar assemblies, 117 inches and 91.8 inches in length (components of the Firefinder II).

**c. Personnel.** Two persons can prepare and rig this load in 30 minutes.

**d. Procedures.** The following procedures apply to this load:

**(1) Preparation.** Prepare the load using the following steps:

**NOTE: Do not stand on the surface of the antenna array at any time.**

**(a)** Assemble the two spreader bar assemblies by matching similar sections to form a long (117-inch) and a short (91.8-inch) spreader bar.

**(b)** Prepare the Firefinder II for transport in accordance with operator's manual.

**(c)** Secure all loose equipment on the pallet with tape or nylon cord.

**(d)** Ensure all latches, doors, and panels are secured with tape or nylon cord.

**(e)** Using the two tie-down straps, secure the antenna cover to the antenna array. Route the tie-down straps from front to rear.

**(f)** Place the long (117-inch) spreader bar on top of the shelter roof. Position the bar (parallel with the side of the shelter) between the edge of the shelter that is adjacent to the antenna array and the radio mount on the shelter roof. Secure the spreader bar loosely in place (allow adequate slack for movement) with nylon cord to prevent the spreader bar from rolling off the shelter roof.

**(g)** Place the short (91.8-inch) spreader bar through the opening in the antenna array support arms directly below the antenna array as indicated in the illustration. Secure the spreader bar loosely in place with nylon cord to prevent the spreader bar from sliding out of the openings in the support arms.

**(2) Rigging.** Rig the load according to the steps in Figure 12-4.

**(3) Hookup.** The hookup team stands on top of the

shelter. The static wand person discharges the static electricity with the static wand. The hookup person places the apex fitting onto the aircraft cargo hook. The hookup team then moves clear of the load but remains close to the load as the helicopter removes slack from the sling legs. When successful hookup is assured, the hookup team quickly exits the area underneath the helicopter to the designated rendezvous point.

**(4) Derigging.** Derigging is the reverse of the preparation and rigging procedures in steps d (1) and d (2).

**NOTE: Brief the helicopter crew to relax sling leg tension, lower the spreader bars onto the shelter roof and antenna array support arms, and hover to the side of the load when releasing the sling set.**

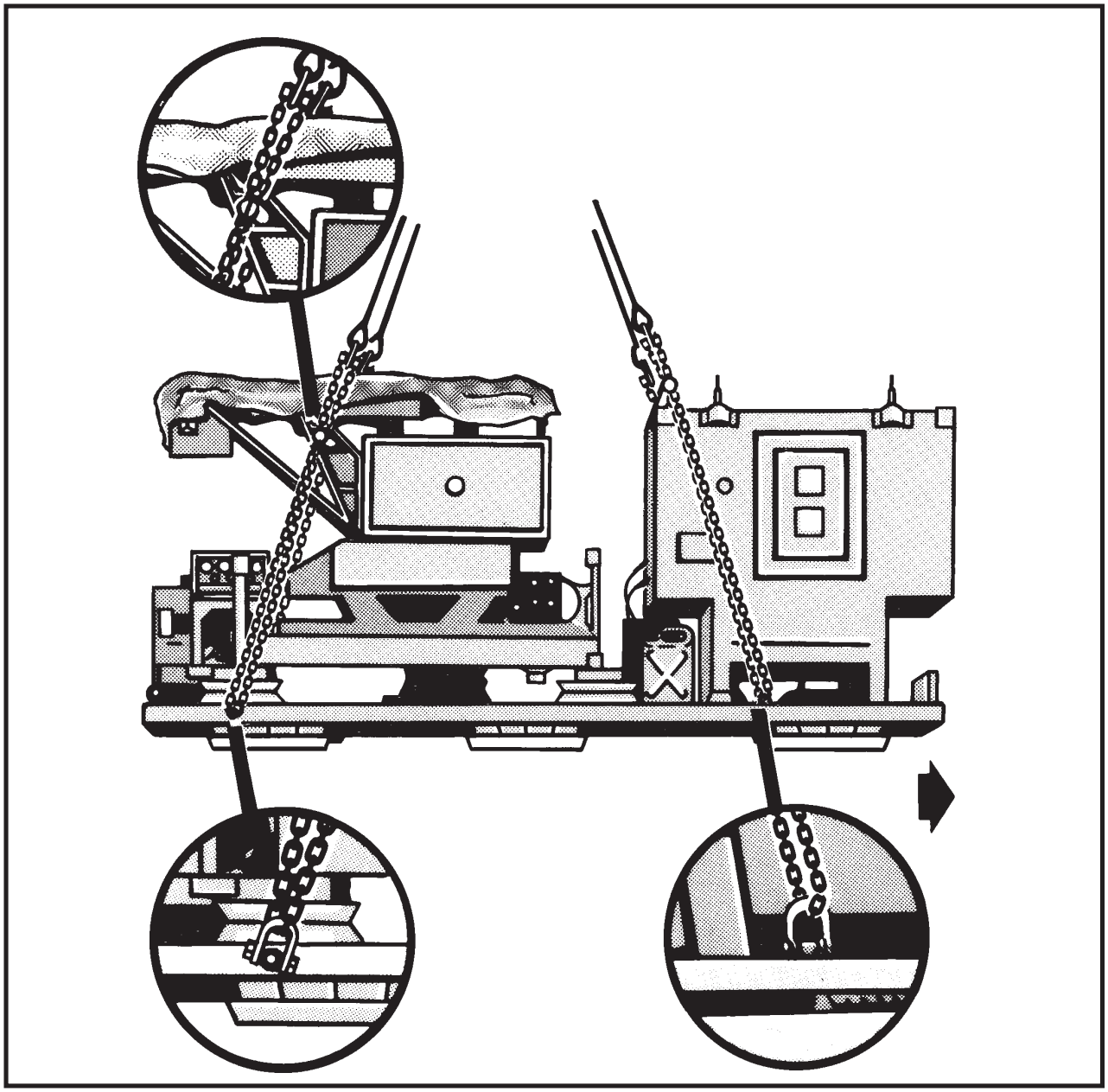

*Figure 12-4. AN/TPQ-36 Firefinder II*

**RIGGING STEPS**

**1.** Position apex fitting on top of the shelter. Route outer sling legs 1 and 2 to the front (shelter end) of the load and inner sling legs 3 and 4 to the rear (generator end). Sling legs 1 and 3 must be on the left side of the load.

**2.** Using the proper coupling links, add the chain extensions to each sling leg chain assembly.

**3.** Route the chain end of sling leg 1 through the fitting on the left end of the long spreader bar and down the side of the shelter. Insert link 10 (counting down from the grab hook coupling link) in the spreader bar end fitting. Route the chain end through the lift provision located on the left side of the pallet frame, back up to the spreader bar, and insert link 23 in the end fitting. Secure the chain in the end fitting by installing the retaining pin in the end of the spreader bar. Place the correct link from Table 12-4 in the grab hook. Repeat with sling leg 2 through the right end fitting on the spreader bar, and lift provision on the right side of the pallet frame.

**4.** Route the chain end of sling leg 3 through the fitting on the left end of the short spreader bar and down the side of the antenna array assembly. Route the chain end through the lift provision located on the left side of the pallet frame below the generator engine and back up through the spreader bar end fitting. Pull the chains tight to remove slack. Place the correct link from Table 12-4 in the grab hook. Install the retaining pin in the end of the spreader bar. Repeat with sling leg 4 through the right end fitting on the spreader bar and lift provision on the right side of the pallet frame.

**NOTE: The chain links do not lock in the end fittings on the short spreader bar like they do on the long spreader bar.**

**5.** Tape the two loops of the chain legs together every 1 to 2 feet. Secure all excess chain with tape or nylon cord. Place padding around the grabhooks and secure with tape or nylon cord to prevent damage caused by the grabhooks when the sling is released.

**6.** Pull the rear sling legs 3 and 4 tight over top of the antenna array to remove slack from the sling legs. Cluster and tie or tape (breakaway technique) the sling legs together to prevent the chains and grabhooks from fouling on the antenna array during hookup and lift-off.

**7.** Cluster and tie or tape (breakaway technique) the front sling legs 1 and 2 together on top of the shelter to prevent entanglement during hookup and lift-off.

***Figure 12-4. AN/TPQ-36 Firefinder II (continued)***

## 12-6. OE-361/G Quick Reaction Satellite Antenna

**a. Applicability.** The following item in Table 12-5 is certified for all helicopters with suitable lift capacity by the US Army Natick Research, Development, and Engineering Center:

**Table 12-5. OE-361/G Quick Reaction Satellite Antenna**

| NOMENCLATURE | MAX WEIGHT (POUNDS) | SLING SET | LINK COUNT FRONT/REAR | RECOMMENDED AIRSPEED (KNOTS) |
|---|---|---|---|---|
| Antenna, Satellite, Quick Reaction (QRSA), OE-361/G | 4,830 | 10K | 3/30 | 80 |

**b. Materials.** The following materials are required to rig this load:

**(1)** Sling set (10,000-pound capacity).

**(2)** Tape, adhesive, pressure-sensitive, 2-inch wide roll.

**(3)** Cord, nylon, Type III, 550-pound breaking strength.

**(4)** Webbing, cotton, 1/4-inch, 80-pound breaking strength.

**(5)** Felt sheet, cattle hair, Type IV, 1/2-inch or suitable substitute.

**c. Personnel.** Four persons can prepare and rig this load in 30 minutes.

**d. Procedures.** The following procedures apply to this load:

**(1) Preparation.** Prepare the load using the following steps:

**(a)** Install the spreader bar assembly which is stored on the load. After hooking the spreader bar assembly to the lift rings, tape the keepers securely with tape.

**(b)** Pad both spreader bars with felt or other cushioning material to prevent damage to the antenna panels during load release. Tape or tie the padding securely to prevent it from being dislodged during flight.

**(c)** Pad the uppermost stacked antenna panel with available material to prevent possible damage from the apex clevis at load release. Tape or tie the padding securely to prevent it from being dislodged during flight.

**(d)** Ensure the ladder, box covers, and any other loose items are properly secured. If the tie-down straps are missing or worn, replace with nylon cord.

**(2) Rigging.** Rig the load according to the steps in Figure 12-5.

**(3) Hookup.** The hookup team stands on top of the load between the stacked antenna panels and either side of the center post. The static wand person discharges the static electricity with the static wand. The hookup person places the apex fitting onto the aircraft cargo hook. The hookup team then moves clear of the load but remains close to the load as the helicopter removes slack from the sling legs. When successful hookup is assured, the hookup team quickly exits the area underneath the helicopter to the designated rendezvous point.

**(4) Derigging.** Derigging is the reverse of the preparation and rigging procedures in steps d (1) and d (2).

**CAUTION**

**Brief the helicopter crew to relax sling leg tension, lower the spreader bars onto the shelter roof and antenna array support arms, and hover to the side of the load when releasing the sling set.**

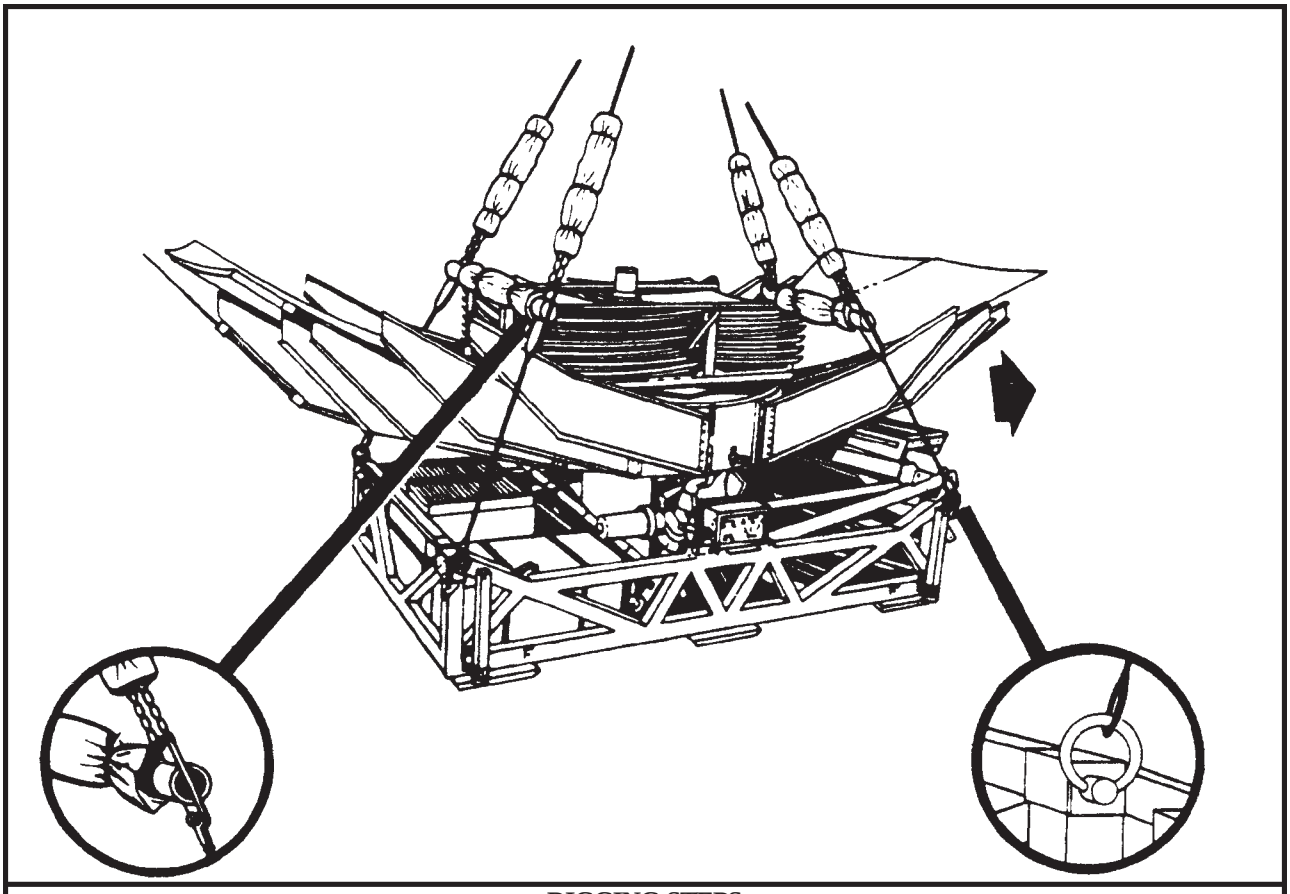

**RIGGING STEPS**

**1.** Position the apex fitting on top of the load. Route outer sling legs 1 and 2 to the front (ladder end) of the load and inner sling legs 3 and 4 to the rear. Sling legs 1 and 3 must be on the left side of the load.

**2.** Loop the chain end of sling leg 1 through the left lift eye of the front spreader bar. Place the correct link from Table 12-5 in the grab hook. Repeat with sling leg 2 and the right lift eye on the front spreader bar.

**3.** Loop the chain end of sling leg 3 through the left lift eye of the rear spreader bar. Place the correct link from Table 12-5 in the grab hook. Repeat with sling leg 4 and the right lift eye on the rear spreader bar. Secure excess chain with tape or nylon cord.

**4.** Wrap felt padding or other suitable cushioning material around each grab hook assembly to protect the antenna when the sling set is released. Tape or tie the padding securely to prevent it from being dislodged during flight.

**5.** Cluster and tie or tape (breakaway technique) all sling legs together on top of the antenna to prevent entanglement during hookup and lift-off.

*Figure 12-5. OE-361/G Quick Reaction Satellite Antenna*

## 12-7. AS-3471/TPN-22 Antenna Pallet (USMC)

**a. Applicability.** The following item in Table 12-6 is certified for all helicopters with suitable lift capacity by the US Army Natick Research, Development, and Engineering Center:

**Table 12-6. AS-3471/TPN-22 Antenna Pallet (USMC)**

| NOMENCLATURE | MAX WEIGHT (POUNDS) | SLING SET | LINK COUNT FRONT/REAR | RECOMMENDED AIRSPEED (KNOTS) |
|---|---|---|---|---|
| Antenna Pallet, AN-3471/TPN-22 TAMCN Q2115 | 5,700 | 40K | 3/5 | 80 |

**b. Materials.** The following materials are required to rig this load:

**(1)** Sling set (40,000-pound capacity) with four additional chain lengths and coupling links.

**(2)** Tape, adhesive, pressure-sensitive, 2-inch wide roll.

**(3)** Cord, nylon, Type III, 550-pound breaking strength.

**(4)** Webbing, cotton, 1/4-inch, 80-pound breaking strength.

**(5)** Felt sheet, cattle hair, Type IV, 1/2-inch or suitable substitute.

**c. Personnel.** Four persons can prepare and rig this load in 15 minutes.

**d. Procedures.** The following procedures apply to this load:

**(1) Preparation.** Prepare the load using the following steps:

**(a)** Secure all handles.

**(b)** Secure the crank handle at the base of the pallet.

**(c)** Add the additional chain length to each leg of the sling set using the coupling links.

**(2) Rigging.** Rig the load according to the steps in Figure 12-6.

**(3) Hookup.** The hookup team stands on the pallet. The static wand person discharges the static electricity with the static wand. The hookup person places the apex fitting onto the aircraft cargo hook. The hookup team then moves clear of the load but remains close to the load as the helicopter removes slack from the sling legs. When successful hookup is assured, the hookup team quickly exits the area underneath the helicopter to the designated rendezvous point.

**(4) Derigging.** Derigging is the reverse of the preparation and rigging procedures in steps d (1) and d (2).

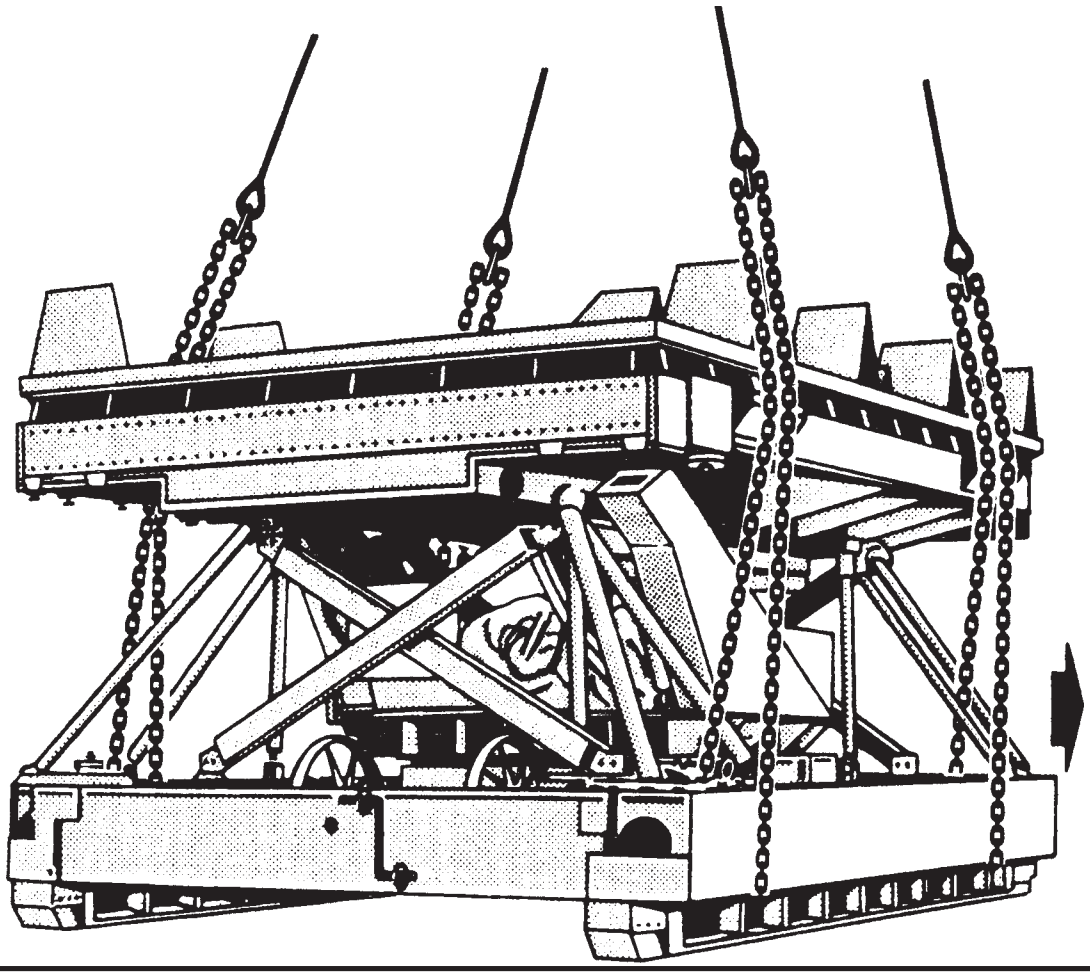

**RIGGING STEPS**

**1.** Position the apex fitting on top of the load. Route outer sling legs 1 and 2 to the front (supply box end) of the load and inner sling legs 3 and 4 to the rear (leveling disk end). Sling legs 1 and 3 must be on the left side of the load.

**2.** Loop the chain end of sling leg 1 through the small space between the channel beams at the left front base of the antenna. Place the correct link from Table 12-6 in the grab hook. Repeat with sling leg 2 on the right front base of the antenna.

**3.** Loop the chain end of sling leg 3 through the small space between the channel beams at the left rear base of the antenna. Place the correct link from Table 12-6 in the grab hook. Repeat with sling leg 4 on the right rear base of the antenna.

**4.** Tie or tape (breakaway technique) all chains loosely to the straps at the bumpers to prevent the chains from moving off the protective bumpers.

**5.** Cluster and tie or tape (breakaway technique) all sling legs together on top of the antenna to prevent entanglement during hookup and lift-off.

*Figure 12-6. AS-3471/TPN-22 Antenna Pallet*

## 12-8. Antenna Pallet Transit Frame

**a. Applicability.** The following items in Table 12-7 are certified for all helicopters with suitable lift capacity by the US Army Natick Research, Development, and Engineering Center:

**Table 12-7. Antenna Pallet Transit Frame**

| NOMENCLATURE | MAX WEIGHT (POUNDS) | SLING SET | LINK COUNT FRONT/REAR | RECOMMENDED AIRSPEED (KNOTS) |
|---|---|---|---|---|
| SM-F 973604-1 used with AN/TSC-93B | 1,970 | 10K | 30/3 | 75 |
| SM-F 973604-21 used with AN/TSC-85B | 2,107 | 10K | 30/3 | 75 |

**b. Materials.** The following materials are required to rig this load:

**(1)** Sling set (10,000-pound capacity).

**(2)** Tape, adhesive, pressure-sensitive, 2-inch wide roll.

**(3)** Cord, nylon, Type III, 550-pound breaking strength.

**(4)** Webbing, cotton, 1/4-inch, 80-pound breaking strength.

**c. Personnel.** Four persons can prepare and rig this load in 10 minutes.

**d. Procedures.** The following procedures apply to this load:

**(1) Preparation.** Prepare the load using the following steps:

**(a)** Secure all equipment with the eight ratchet straps supplied. Use tape or Type III nylon cord if additional security is required.

**(b)** Remove and stow the protective cover. Secure with Type III nylon cord.

**(2) Rigging.** Rig the load according to the steps in Figure 12-7.

**(3) Hookup.** The hookup team stands on the frame. The static wand person discharges the static electricity with the static wand. The hookup person places the apex fitting onto the aircraft cargo hook. The hookup team then moves clear of the load but remains close to the load as the helicopter removes slack from the sling legs. When successful hookup is assured, the hookup team quickly exits the area underneath the helicopter to the designated rendezvous point.

**(4) Derigging.** Derigging is the reverse of the preparation and rigging procedures in steps d (1) and d (2).

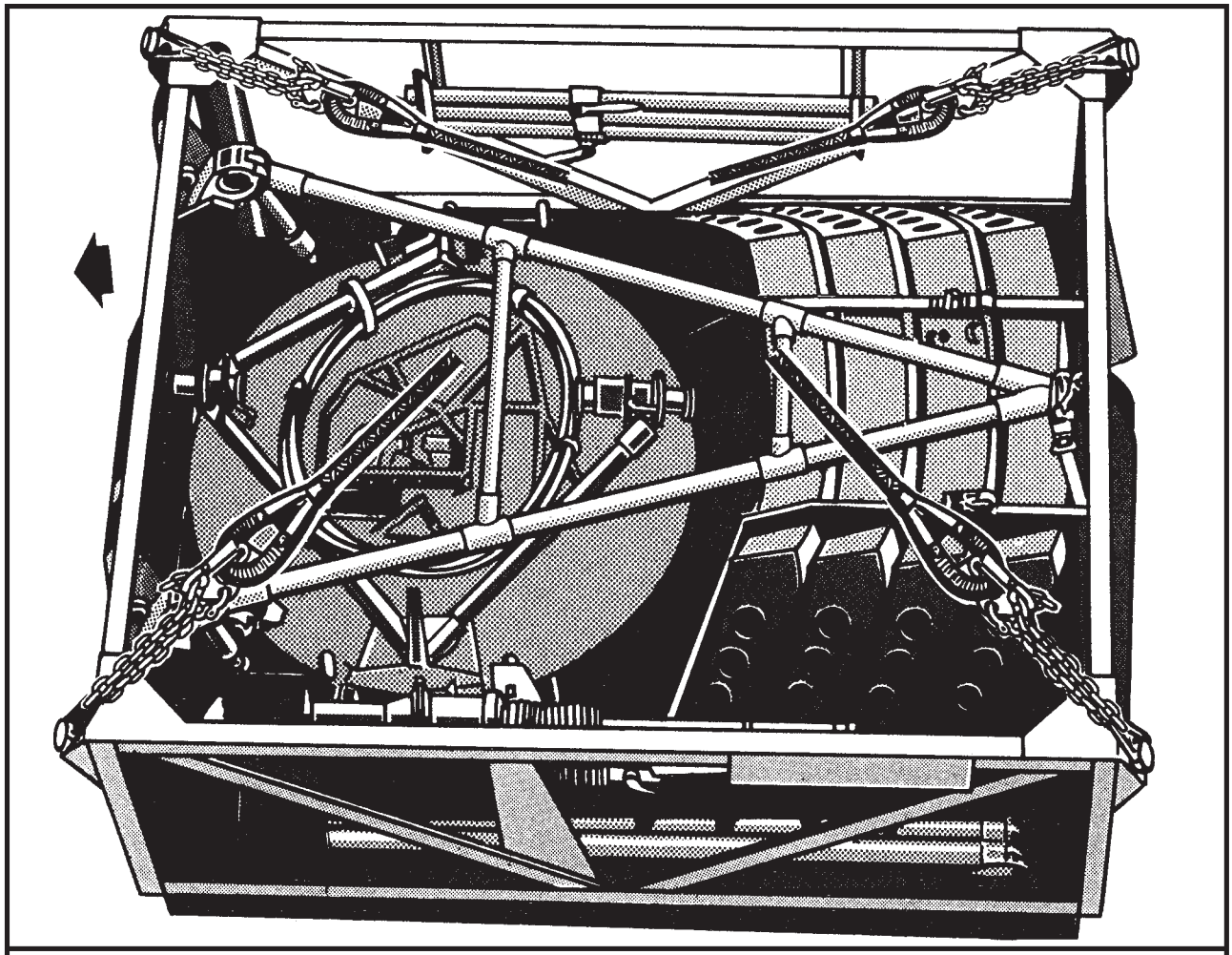

**RIGGING STEPS**

**1.** Position the apex fitting on top of the load. Route outer sling legs 1 and 2 to the front (opposite the antenna segments) of the load and inner sling legs 3 and 4 to the rear . Sling legs 1 and 3 must be on the left side of the load.

**2.** Loop the chain end of sling leg 1 through the left front lift provision located on the top left corner of the frame. Place the correct link from Table 12-7 in the grab hook. Repeat with sling leg 2 on the top right corner of the frame. Secure the excess chain with tape or Type III nylon cord.

**3.** Loop the chain end of sling leg 3 through the left rear lift provision. Place the correct link from Table 12-7 in the grab hook. Repeat with sling leg 4 on the right rear lift provision.

**4.** Cluster and tie or tape (breakaway technique) all sling legs together on top of the frame to prevent entanglement during hookup and lift-off.

*Figure 12-7. Antenna Pallet Transit Frame*

## 12-9. Digital Group Multiplexer (DGM), Digital Antenna Mast Program (DAMP), 2 and 3 Antenna Pallet Configurations

**a. Applicability.** The following items in Table 12-8 are certified for all helicopters with suitable lift capacity by the US Army Natick Research, Development, and Engineering Center:

**Table 12-8. Digital Group Multiplexer (DGM), Digital Antenna Mast Program (DAMP)**

| NOMENCLATURE | MAX WEIGHT (POUNDS) | SLING SET | LINK COUNT FRONT/REAR | RECOMMENDED AIRSPEED (KNOTS) |
|---|---|---|---|---|
| DGM, DAMP Pallet, 2 Antenna Configuration | 4,300 | 10K | 3/3 | 90 |
| DGM, DAMP Pallet, 3 Antenna Configuration | 5,500 | 10K | 3/3 | 90 |

**b. Materials.** The following materials are required to rig this load:

**(1)** Sling set (10,000-pound capacity).

**(2)** Tape, adhesive, pressure-sensitive, 2-inch wide roll.

**(3)** Cord, nylon, Type III, 550-pound breaking strength.

**(4)** Webbing, cotton, 1/4-inch, 80-pound breaking strength.

**(5)** Webbing, tubular, nylon, 1/2-inch, 1000-pound breaking strength.

**(6)** Felt sheet, cattle hair, Type IV, 1/2-inch or suitable substitute.

**c. Personnel.** Four persons can prepare and rig this load in 20 minutes.

**d. Procedures.** The following procedures apply to this load:

**(1) Preparation.** Prepare the load using the following steps:

**(a)** Secure the grating on the cable reels side with Type III nylon cord.

**(b)** Secure the cable reels with Type III nylon cord.

**(c)** Wrap the tie-down straps and turnbuckles with padding and secure the padding with tape. Secure them to the pallet with the rubber straps provided.

**(2) Rigging.** Rig the load according to the steps in Figure 12-8.

**(3) Hookup.** The hookup team stands on the pallet. The static wand person discharges the static electricity with the static wand. The hookup person places the apex fitting onto the aircraft cargo hook. The hookup team then moves clear of the load but remains close to the load as the helicopter removes slack from the sling legs. When successful hookup is assured, the hookup team quickly exits the area underneath the helicopter to the designated rendezvous point.

**(4) Derigging.** Derigging is the reverse of the preparation and rigging procedures in steps d (1) and d (2).

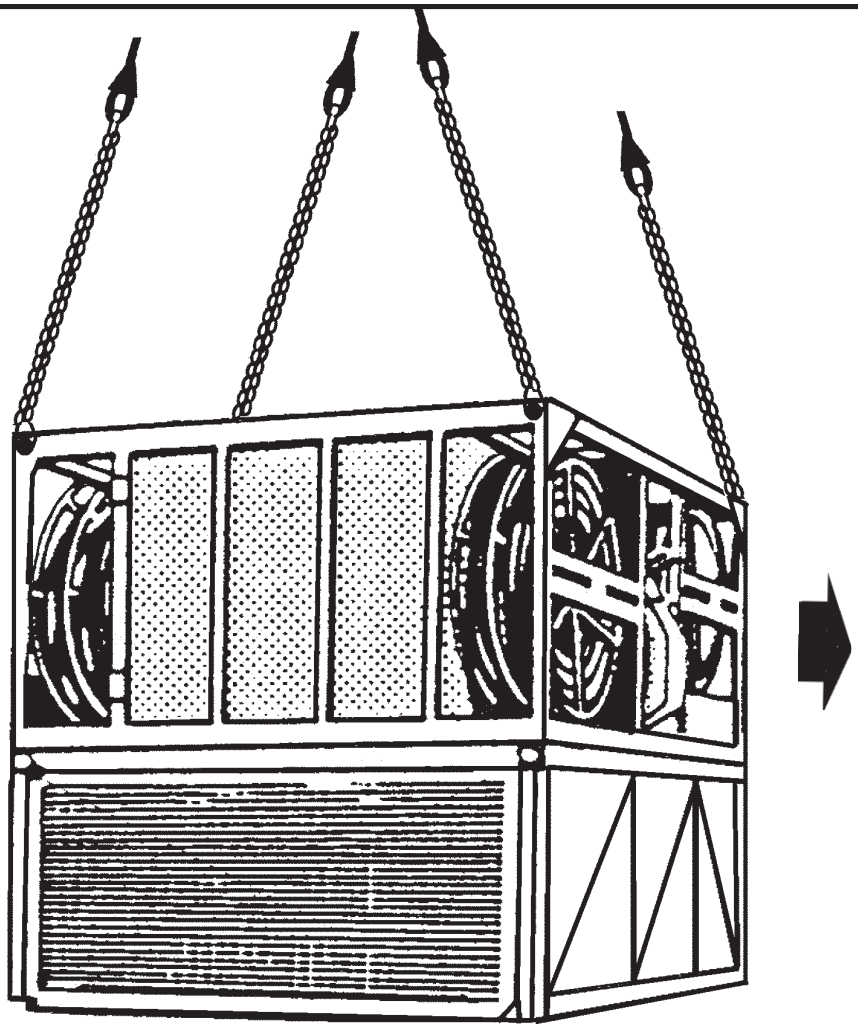

**RIGGING STEPS**

**1.** Position the apex fitting on top of the load. Route outer sling legs 1 and 2 to the front (cable reel end) of the load and inner sling legs 3 and 4 to the rear. Sling legs 1 and 3 must be on the left side of the load.

**2.** Loop the chain end of sling leg 1 through the left front lift provision located on the top left corner of the frame. Place the correct link from Table 12-8 in the grab hook. Repeat with sling leg 2 on the top right corner of the frame.

**3.** Loop the chain end of sling leg 3 through the left rear lift provision. Place the correct link from Table 12-8 in the grab hook. Repeat with sling leg 4 on the right rear lift provision.

**4.** Cluster and tie or tape (breakaway technique) all sling legs together on top of the frame to prevent entanglement during hookup and lift-off.

*Figure 12-8. Digital Group Multiplexer (DGM), Digital Antenna Mast Program (DAMP)*

## 12-10. Digital Group Multiplexer (DGM), Auxiliary Equipment Transportation Container (AETC), 2 and 3 Mast Configurations

**a. Applicability.** The following items in Table 12-9 are certified for all helicopters with suitable lift capacity by the US Army Natick Research, Development, and Engineering Center:

**Table 12-9. Digital Group Multiplexer (DGM), Auxiliary Equipment Transportation Container (AETC)**

| NOMENCLATURE | MAX WEIGHT (POUNDS) | SLING SET | LINK COUNT FRONT/REAR | RECOMMENDED AIRSPEED (KNOTS) |
|---|---|---|---|---|
| DGM, AETC, 2 Mast Configuration | 3,028 | 10K | 3/3 | 100 |
| DGM, AETC, 3 Mast Configuration | 4,014 | 10K | 3/3 | 100 |

**b. Materials.** The following materials are required to rig this load:

**(1)** Sling set (10,000-pound capacity).

**(2)** Tape, adhesive, pressure-sensitive, 2-inch wide roll.

**(3)** Cord, nylon, Type III, 550-pound breaking strength.

**(4)** Webbing, cotton, 1/4-inch, 80-pound breaking strength.

**c. Personnel.** Four persons can prepare and rig this load in 15 minutes.

**d. Procedures.** The following procedures apply to this load:

**(1) Preparation.** Prepare the load using the following steps:

**(a)** Secure all loose equipment inside the AETC with tape or Type III nylon cord.

**(b)** Remove and stow the AETC cover. Secure the cover with Type III nylon cord.

**(2) Rigging.** Rig the load according to the steps in Figure 12-9.

**(3) Hookup.** The hookup team stands on the AETC. The static wand person discharges the static electricity with the static wand. The hookup person places the apex fitting onto the aircraft cargo hook. The hookup team then moves clear of the load but remains close to the load as the helicopter removes slack from the sling legs. When successful hookup is assured, the hookup team quickly exits the area underneath the helicopter to the designated rendezvous point.

**(4) Derigging.** Derigging is the reverse of the preparation and rigging procedures in steps d (1) and d (2).

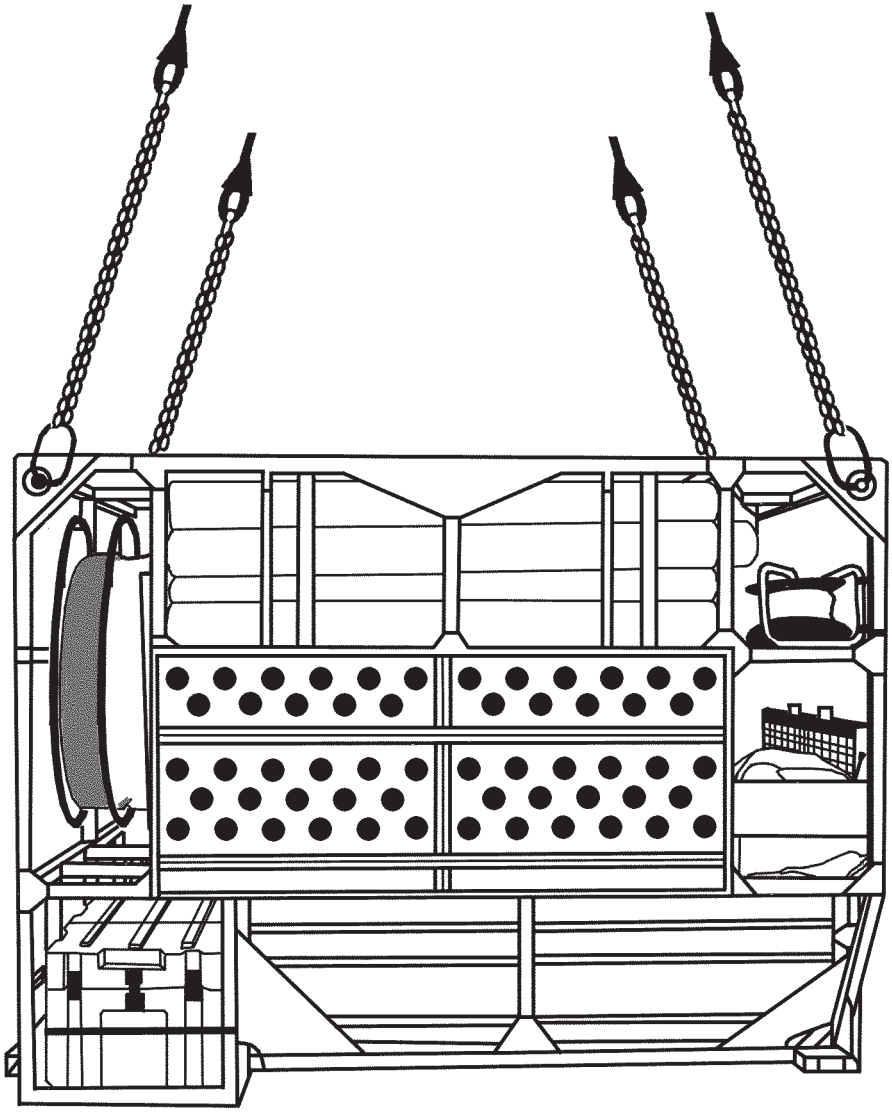

**RIGGING STEPS**

**1.** Position the apex fitting on top of the load. Route outer sling legs 1 and 2 to the front of the load and inner sling legs 3 and 4 to the rear. Sling legs 1 and 3 must be on the left side of the load.

**2.** Loop the chain end of sling leg 1 through the left front lift provision. Place the correct link from Table 12-9 in the grab hook. Repeat with sling leg 2 on the top right corner of the frame.

**3.** Loop the chain end of sling leg 3 through the left rear lift provision. Place the correct link from Table 12-9 in the grab hook. Repeat with sling leg 4 on the right rear lift provision.

**4.** Cluster and tie or tape (breakaway technique) all sling legs together on top of the AETC to prevent entanglement during hookup and lift-off.

***Figure 12-9. Digital Group Multiplexer (DGM), Auxiliary Equipment Transportation Container (AETC)***

## 12-11. Lightweight Generator Frame Assembly (AN/TSC-93B Reconfiguration) Satellite Communications Terminal

**a. Applicability.** The following items in Table 12-10 are certified for all helicopters with suitable lift capacity by the US Army Natick Research, Development, and Engineering Center:

**Table 12-10. Lightweight Generator Frame Assembly (AN/TSC-93B Reconfiguration)**

| NOMENCLATURE | MAX WEIGHT (POUNDS) | SLING SET | LINK COUNT FRONT/REAR | RECOMMENDED AIRSPEED (KNOTS) |
|---|---|---|---|---|
| AN/TSC-98B Satellite Communications Terminal without ALTA | 3,644 | 10K | 3/3 | 110 |
| AN/TSC-98B Satellite Communications Terminal with ALTA | 3,957 | 10K | 3/3 | 110 |

**b. Materials.** The following materials are required to rig this load:

**(1)** Sling set (10,000-pound capacity).

**(2)** Tape, adhesive, pressure-sensitive, 2-inch wide roll.

**(3)** Cord, nylon, Type III, 550-pound breaking strength.

**(4)** Webbing, cotton, 1/4-inch, 80-pound breaking strength.

**(5)** Tie-down strap, cargo, CGU-1/B (3 each).

**c. Personnel.** Four persons can prepare and rig this load in 10 minutes.

**d. Procedures.** The following procedures apply to this load:

**(1) Preparation.** Prepare the load using the following steps:

**(a)** Secure all loose equipment with CGU-1/B tie-down straps, tape, or Type III nylon cord.

**(b)** Remove and stow the cover. Secure the cover with Type III nylon cord.

**(2) Rigging.** Rig the load according to the steps in Figure 12-10.

**(3) Hookup.** The hookup team stands on the frame corners, diagonally across from each other. The static wand person discharges the static electricity with the static wand. The hookup person places the apex fitting onto the aircraft cargo hook. The hookup team then moves clear of the load but remains close to the load as the helicopter removes slack from the sling legs. When successful hookup is assured, the hookup team quickly exits the area underneath the helicopter to the designated rendezvous point.

**CAUTION**

**Brief the helicopter crew to relax the sling leg tension and hover to the side of the load when releasing the apex fitting.**

**(4) Derigging.** Derigging is the reverse of the preparation and rigging procedures in steps d (1) and d (2).

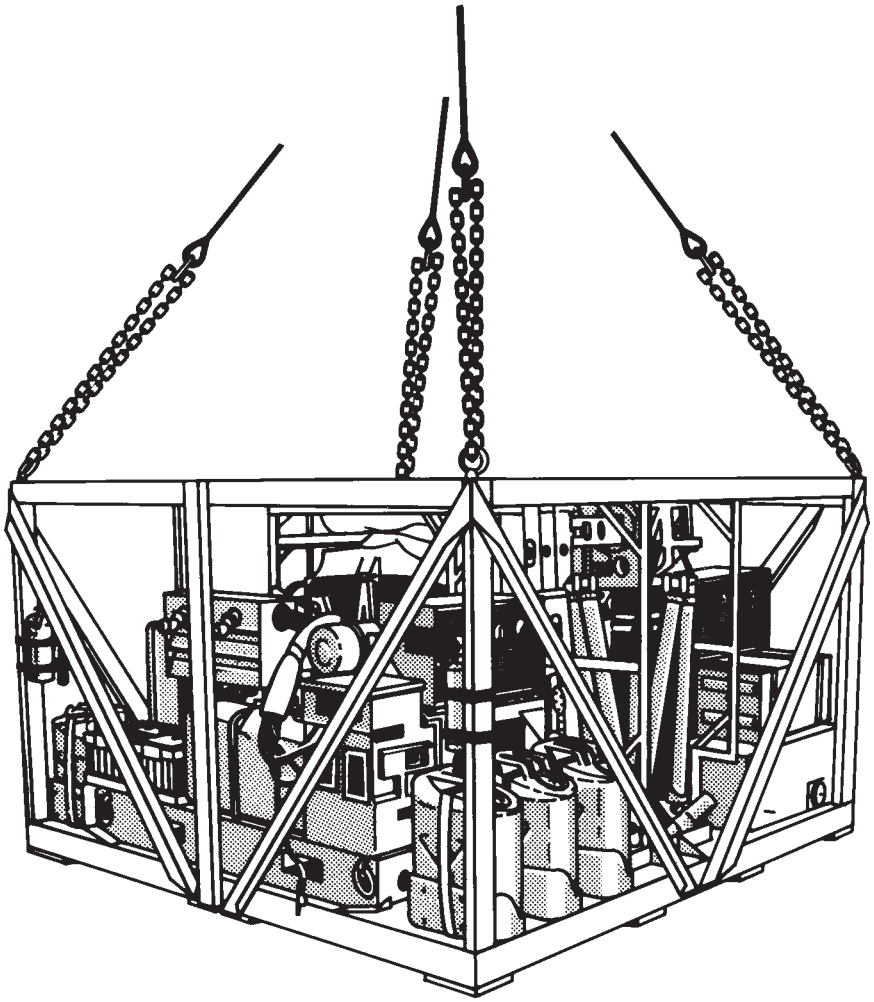

**RIGGING STEPS**

**1.** Position the apex fitting on top of the load. Route outer sling legs 1 and 2 to the front of the load and inner sling legs 3 and 4 to the rear. Sling legs 1 and 3 must be on the left side of the load.

**2.** Loop the chain end of sling leg 1 through the left front lift provision. Place the correct link from Table 12-10 in the grab hook. Repeat with sling leg 2 on the top right corner of the frame.

**3.** Loop the chain end of sling leg 3 through the left rear lift provision. Place the correct link from Table 12-10 in the grab hook. Repeat with sling leg 4 on the right rear lift provision.

**4.** Cluster and tie or tape (breakaway technique) all sling legs together on top of the load to prevent entanglement during hookup and lift-off.

***Figure 12-10. Lightweight Generator Frame Assembly (AN/TSC-93B Reconfiguration)***

## 12-12. Secure Mobile Anti-Jam Reliable Tactical Terminal (SMART-T) Pallet

**a. Applicability.** The following item in Table 12-11 is certified for all helicopters with suitable lift capacity by the US Army Soldier Systems Center:

**Table 12-11. Secure Mobile Anti-Jam Reliable Tactical Terminal (SMART-T) Pallet**

| NOMENCLATURE | MAX WEIGHT (POUNDS) | SLING SET | LINK COUNT FRONT/REAR | RECOMMENDED AIRSPEED (KNOTS) |
|---|---|---|---|---|
| Secure Mobile Anti-Jam Reliable Tactical Terminal (SMART-T) Pallet | 2,440 | 10K | 3/30 | 100 |

**b. Materials.** The following materials are required to rig this load:

**(1)** Sling set (10,000-pound capacity).

**(2)** Tape, adhesive, pressure-sensitive, 2-inch wide roll.

**(3)** Cord, nylon, Type III, 550-pound breaking strength.

**(4)** Webbing, cotton, 1/4-inch, 80-pound breaking strength.

**c. Personnel.** Four persons can prepare and rig this load in 10 minutes.

**d. Procedures.** The following procedures apply to this load:

**(1) Preparation.** Prepare the load using the following steps:

**(a)** Secure all loose equipment with tape or Type III nylon cord. Ensure the fuel cans at the end of the pallet are locked in position.

**(b)** Secure the antenna dish.

**(2) Rigging.** Rig the load according to the steps in Figure 12-11.

**NOTE: The fuel can brackets are on the rear of the load.**

**(3) Hookup.** The hookup team stands beside the pallet. The static wand person discharges the static electricity with the static wand. The hookup person places the apex fitting onto the aircraft cargo hook. The hookup team then moves clear of the load but remains close to the load as the helicopter removes slack from the sling legs. When successful hookup is assured, the hookup team quickly exits the area underneath the helicopter to the designated rendezvous point.

**(4) Derigging.** Derigging is the reverse of the preparation and rigging procedures in steps d (1) and d (2).

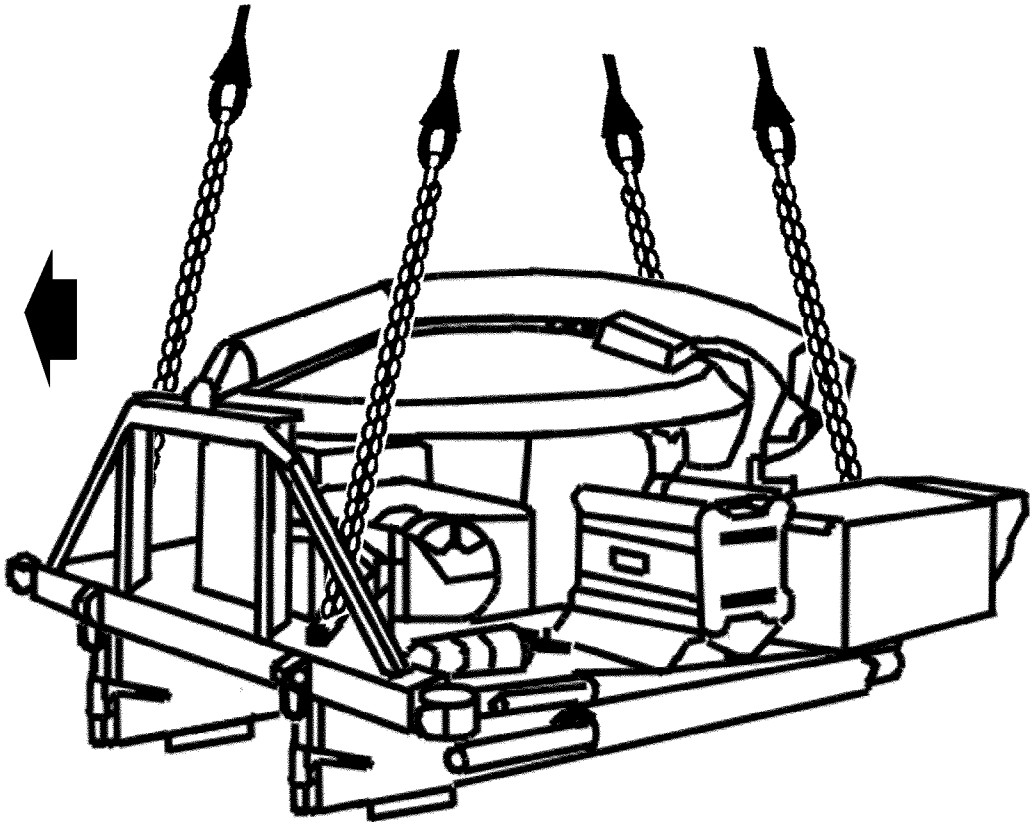

**RIGGING STEPS**

**1.** Position the apex fitting beside the pallet. Route outer sling legs 1 and 2 to the front of the load and inner sling legs 3 and 4 to the rear. Sling legs 1 and 3 must be on the left side of the load.

**2.** Loop the chain end of sling leg 1 through the left front lift provision. Place the correct link from Table 12-11 in the grab hook. Repeat with sling leg 2 on the top right corner of the frame.

**3.** Loop the chain end of sling leg 3 through the left rear lift provision. Place the correct link from Table 12-11 in the grab hook. Repeat with sling leg 4 on the right rear lift provision. Secure excess chain with tape or Type III nylon cord.

**4.** Cluster and tie or tape (breakaway technique) all sling legs together on top of the load to prevent entanglement during hookup and lift-off.

***Figure 12-11. Secure Mobile Anti-Jam Reliable Tactical Terminal (SMART-T) Pallet***

# CHAPTER 13

# CERTIFIED SINGLE-POINT RIGGING PROCEDURES FOR GENERATOR SETS

## 13-1. Introduction

This chapter contains rigging procedures for single-point lift of generator sets that have been certified for sling load. Each rigging procedure is found in a paragraph that includes a description of the load, materials required for rigging, and steps to complete the procedure. An applicability paragraph is also a part of each paragraph and identifies the certified loads. The certified single-point rigging procedures for generator sets are in this section. Paragraphs 13-2 through 13-7 give detailed instructions for rigging loads.

**NOTE: Reach Pendants may be used on all single point loads. A static discharge person is not required when using a Reach Pendant.**

## 13-2. Aviation Ground Power Unit (AGPU)

**a. Applicability.** The following item in Table 13-1 is certified for all helicopters with suitable lift capacity by the US Army Natick Research, Development, and Engineering Center:

**Table 13-1. Aviation Ground Power Unit (AGPU)**

| NOMENCLATURE | MAX WEIGHT (POUNDS) | SLING SET | LINK COUNT FRONT/REAR | RECOMMENDED AIRSPEED (KNOTS) |
|---|---|---|---|---|
| Aviation Ground Power Unit | 4,190 | 10K | 3/3 | 90 |

**b. Materials.** The following materials are required to rig this load:

**(1)** Sling set (10,000-pound capacity).

**(2)** Tape, adhesive, pressure-sensitive, 2-inch wide roll.

**(3)** Cord, nylon, Type III, 550-pound breaking strength.

**(4)** Webbing, cotton, 1/4-inch, 80-pound breaking strength.

**(5)** Tie-down strap, cargo, CGU-1/B (4 each).

**(6)** Webbing, nylon, tubular, 1/2-inch,1000-pound breaking strength.

**c. Personnel.** Two persons can prepare and rig this load in 10 minutes.

**d. Procedures.** The following procedures apply to this load:

**(1) Preparation.** Prepare the load using the following steps:

**(a)** Stow and secure the towbar with 1/2-inch tubular nylon.

**(b)** Close all doors, secure handles with tape, and attach four CGU-1/B tie-down straps.

**(c)** Route one tie-down strap horizontally around the power unit. Position it approximately 16 inches down from the top of the power unit. Repeat using another tie-

down strap positioned approximately 8 inches higher than the first tie-down strap.

**(d)** Route another tie-down strap through the forklift lift provisions and then vertically around the power unit. Repeat this procedure using another tie-down strap through the other lift provision.

**(e)** Secure all equipment inside the unit with nylon cord or tape.

**(f)** Secure exhaust cover closed with tape.

**CAUTION**

**Pay careful attention to securing the exhaust cover closed to preclude possible damage during flight. If cover cannot be adequately secured, it should be removed.**

**(g)** Ensure that fuel tank is not more than 3/4 full. Inspect fuel tank cap, oil filler caps, and battery caps to ensure they are secure.

**(h)** Engage the parking brake.

**(2) Rigging.** Rig the load according to the steps in Figure 13-1.

**(3) Hookup.** The hookup team stands on top of the power unit. The static wand person discharges the static electricity with the static wand. The hookup person places the apex fitting onto the aircraft cargo hook. The hookup team then moves clear of the load but remains close to the load as the helicopter removes slack from the sling legs. When successful hookup is assured, the hookup team quickly exits the area underneath the helicopter to the designated rendezvous point.

**(4) Derigging.** Derigging is the reverse of the preparation and rigging procedures in steps d (1) and d (2).

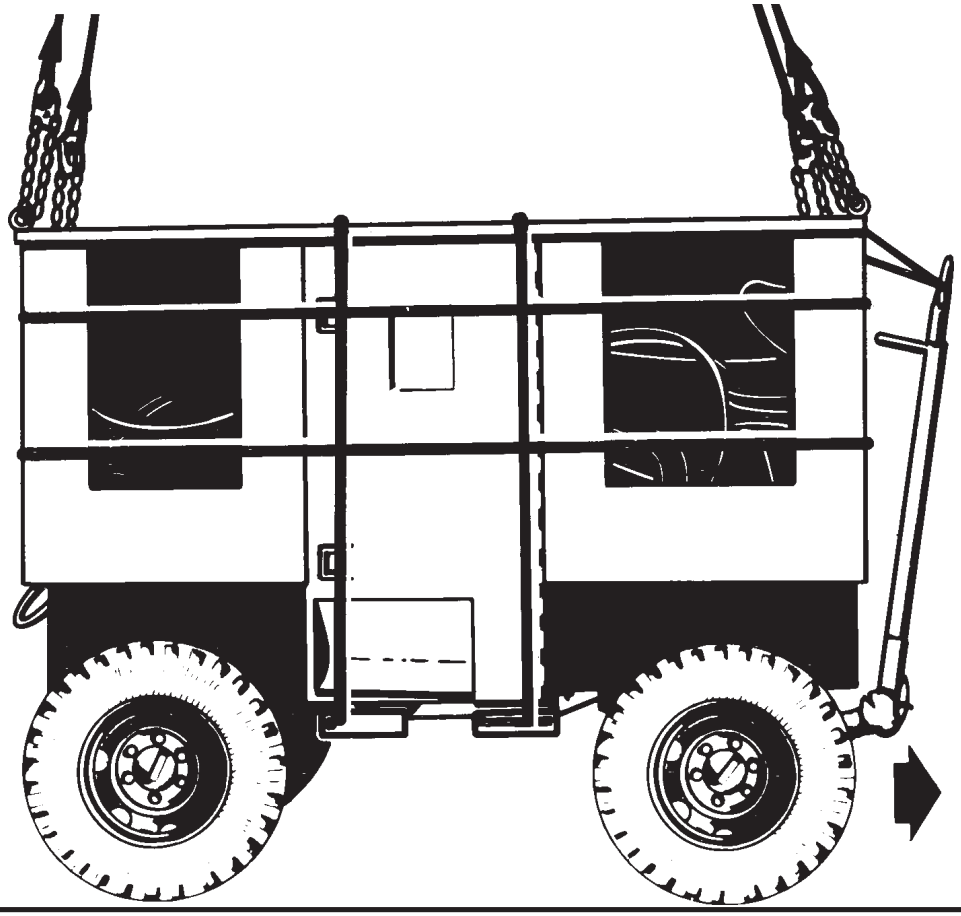

**RIGGING STEPS**

**1.** Position apex fitting on top of the unit. Route outer sling legs 1 and 2 to the front (tongue) of the trailer and inner sling legs 3 and 4 to the rear. Sling legs 1 and 3 should be on the left side of the load.

**2.** Loop the chain end of sling leg 1 through the left front lift ring. Place the correct link from Table 13-1 in the grab hook. Repeat with sling leg 2 on the right front lift ring.

**3.** Loop the chain end of sling leg 3 through the left rear lift ring. Place the correct link from Table 13-1 in the grab hook. Repeat with sling leg 4 on the right rear lift ring.

**4.** Cluster and tie or tape (breakaway technique) all sling legs together on top of the unit to prevent entanglement during hookup and lift-off.

*Figure 13-1. Aviation Ground Power Unit (AGPU)*

## 13-3. Aviation Direct Current Generator Set (ADCGS)

**a. Applicability.** The following item in Table 13-2 is certified for all helicopters with suitable lift capacity by the US Army Natick Research, Development, and Engineering Center:

**Table 13-2. Aviation Direct Current Generator Set (ADCGS)**

| NOMENCLATURE | MAX WEIGHT (POUNDS) | SLING SET | LINK COUNT FRONT/REAR | RECOMMENDED AIRSPEED (KNOTS) |
|---|---|---|---|---|
| Aviation Direct Current Generator Set | 1,100 | 10K | 3/3 | 90 |

**b. Materials.** The following materials are required to rig this load:

**(1)** Sling set (10,000-pound capacity).

**(2)** Tape, adhesive, pressure-sensitive, 2-inch wide roll.

**(3)** Cord, nylon, Type III, 550-pound breaking strength.

**(4)** Webbing, cotton, 1/4-inch, 80-pound breaking strength.

**(5)** Felt sheet, cattle hair, Type IV, 1/2-inch or suitable substitute, 30- x 36-inch (4 sheets).

**c. Personnel.** Two persons can prepare and rig this load in 20 minutes.

**d. Procedures.** The following procedures apply to this load:

**(1) Preparation.** Prepare the load using the following steps:

**(a)** Fold and tape ground cable to the inside of the tongue frame. Roll rear cable in the rack provided. Tape hold-down latch on rear cable rack.

**(b)** Cover cable receptacles. Secure door latches and tape exhaust stack cover down.

**(c)** Route a single length of Type III nylon cord under and through the frame, over the exhaust stack cover and instrument cover, and tie to secure both covers. Tape the fuel tank gage.

**(d)** Set the wheel brakes in the ON position.

**(2) Rigging.** Rig the load according to the steps in Figure 13-2.

**(3) Hookup.** The hookup team stands on the side of the load. The static wand person discharges the static electricity with the static wand. The hookup person places the apex fitting onto the aircraft cargo hook. The hookup team then moves clear of the load but remains close to the load as the helicopter removes slack from the sling legs. When successful hookup is assured, the hookup team quickly exits the area underneath the helicopter to the designated rendezvous point.

**(4) Derigging.** Derigging is the reverse of the preparation and rigging procedures in steps d (1) and d (2).

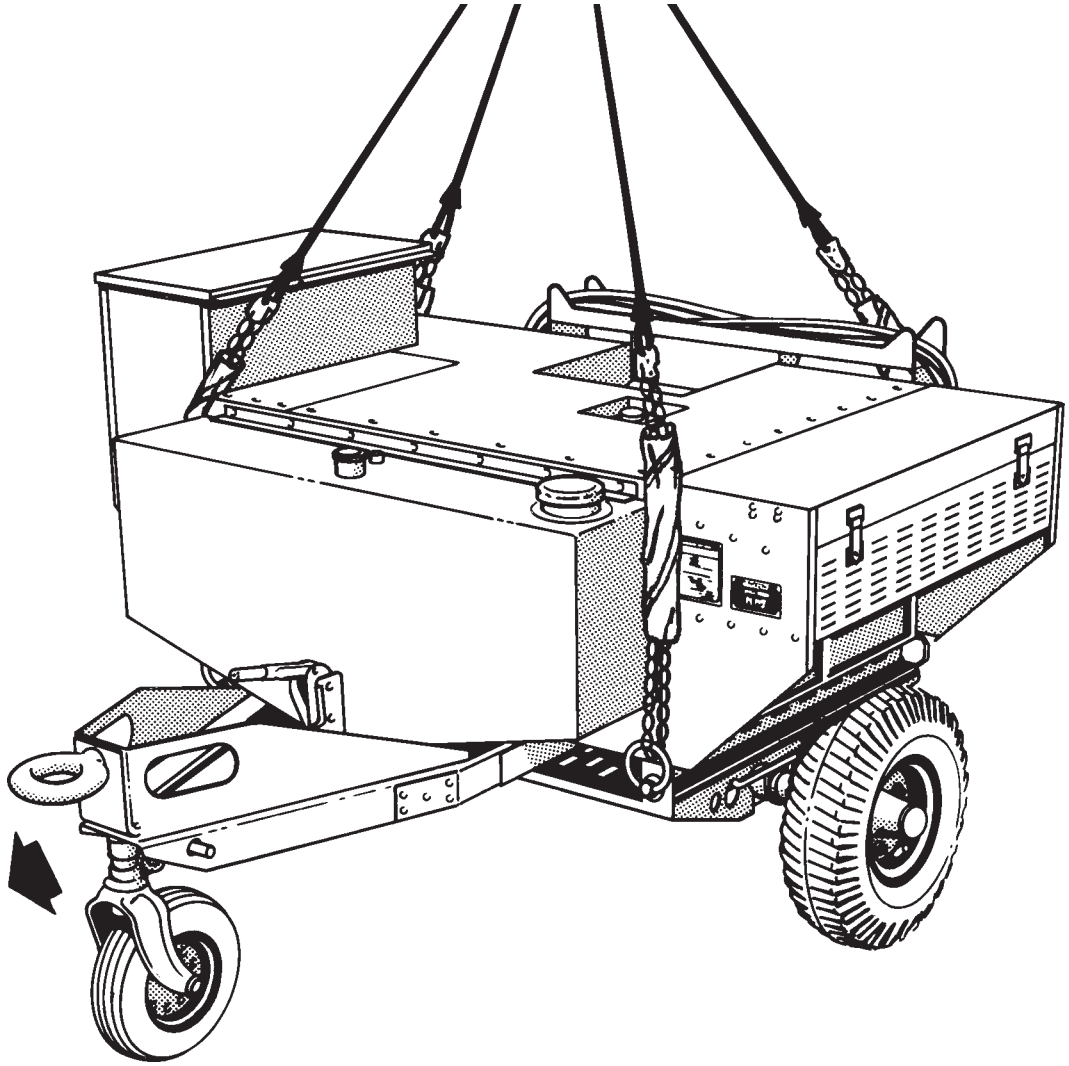

**RIGGING STEPS**

**1.** Position apex fitting on top of the generator set. Route outer sling legs 1 and 2 to the front (tongue) of the trailer and inner sling legs 3 and 4 to the rear. Sling legs 1 and 3 should be on the left side of the load.

**2.** Loop the chain end of sling leg 1 through the left front lift provision. Place the correct link from Table 13-2 in the grab hook. Repeat with sling leg 2 on the right front lift ring.

**3.** Loop the chain end of sling leg 3 through the left rear lift provision. Place the correct link from Table 13-2 in the grab hook. Repeat with sling leg 4 on the right rear lift ring.

**4.** Cluster and tie or tape (breakaway technique) all sling legs together on top of the unit to prevent entanglement during hookup and lift-off.

*Figure 13-2. Aviation Direct Current Generator Set (ADCGS)*

## 13-4. Skid Mounted Generators

**a. Applicability.** The following items in Table 13-3 are certified for all helicopters with suitable lift capacity by the US Army Natick Research, Development, and Engineering Center:

**Table 13-3. Skid Mounted Generators**

| NOMENCLATURE | MAX WEIGHT (POUNDS) | SLING SET | LINK COUNT FRONT/REAR | RECOMMENDED AIRSPEED (KNOTS) |
|---|---|---|---|---|
| MEP-004AAS with Acoustic Suppression Kit, 15KW | 4,031 | 10K | 3/3 | 40 |
| MEP-005AAS with Acoustic Suppression Kit, 30KW | 4,556 | 10K | 3/3 | 65 |
| MEP-103A with Acoustic Suppression Kit, 15KW | 4,230 | 10K | 3/3 | 40 |
| MEP-104A with Acoustic Suppression Kit, 30KW | 4,830 | 10K | 3/3 | 40 |
| MEP-113A with Acoustic Suppression Kit, 15KW | 4,230 | 10K | 3/3 | 40 |
| MEP-114A with Acoustic Suppression Kit, 30KW | 4,830 | 10K | 3/3 | 40 |

**b. Materials.** The following materials are required to rig this load:

**(1)** Sling set (10,000-pound capacity).

**(2)** Tape, adhesive, pressure-sensitive, 2-inch wide roll.

**(3)** Cord, nylon, Type III, 550-pound breaking strength.

**(4)** Webbing, cotton, 1/4-inch, 80-pound breaking strength.

**(5)** Felt sheet, cattle hair, Type IV, 1/2-inch or suitable substitute, 30- x 36-inch (4 sheets).

**c. Personnel.** Two persons can prepare and rig this load in 15 minutes.

**d. Procedures.** The following procedures apply to this load:

**(1) Preparation.** Prepare the load using the following steps:

**(a)** Remove two sling legs from the sling set.

**(b)** Secure all lids, doors, and caps with tape or Type III nylon cord.

**(2) Rigging.** Rig the load according to the steps in Figure 13-3.

**(3) Hookup.** The hookup team stands on top of the load. The static wand person discharges the static electricity with the static wand. The hookup person places the apex fitting onto the aircraft cargo hook. The hookup team then moves clear of the load but remains close to the load as the helicopter removes slack from the sling legs. When successful hookup is assured, the hookup team quickly exits the area underneath the helicopter to the designated rendezvous point.

**(4) Derigging.** Derigging is the reverse of the preparation and rigging procedures in steps d (1) and d (2).

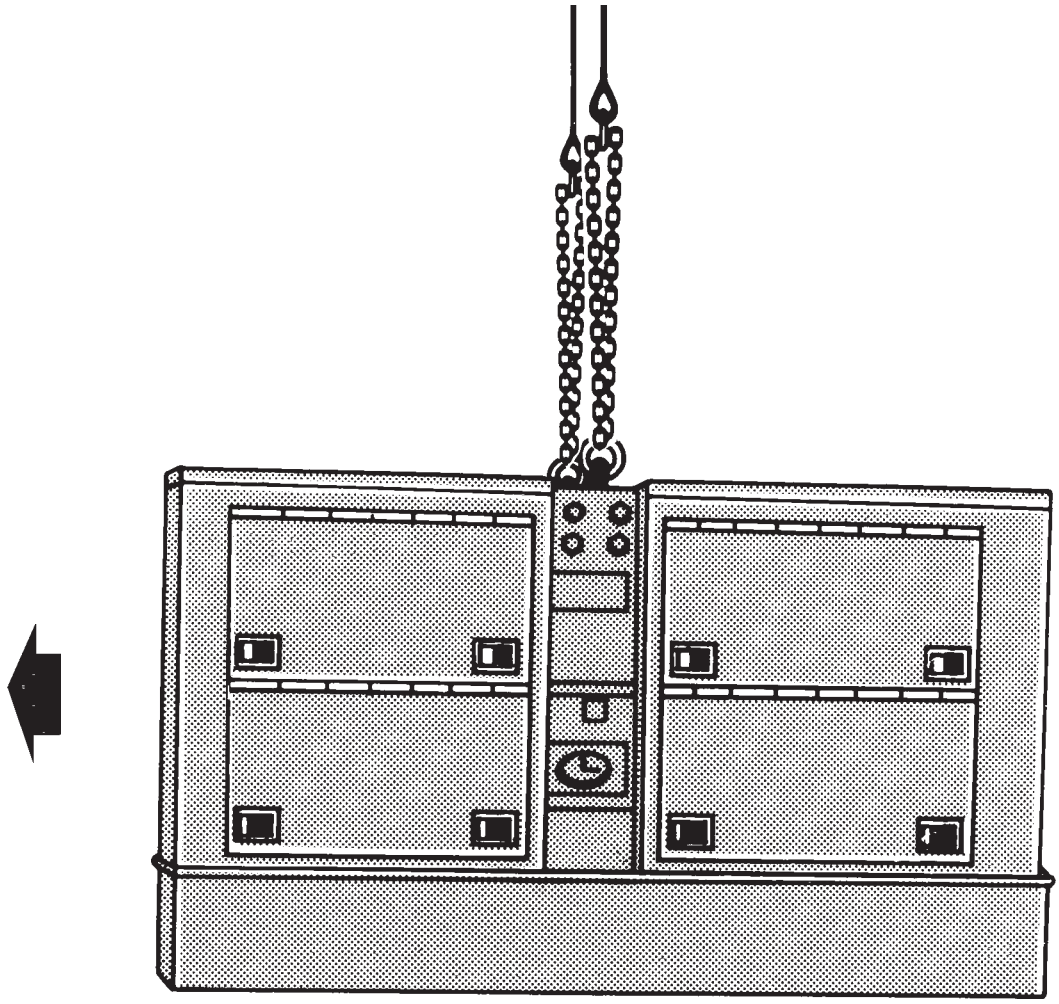

**RIGGING STEPS**

**1.** Position apex fitting on top of the generator set. Route the left sling leg to the left lift provision and the right sling leg to the right lift provision.

**2.** Loop the chain end of left sling leg through the left lift provision. Place the correct link from Table 13-3 in the grab hook. Repeat with the right sling leg on the right lift provision.

**3.** Cluster and tie or tape (breakaway technique) all sling legs together on top of the unit to prevent entanglement during hookup and lift-off.

*Figure 13-3. Skid Mounted Generators*

## 13-5. MEP112A Generator Pallet

**a. Applicability.** The following items in Table 13-4 are certified for all helicopters with suitable lift capacity by the US Army Natick Research, Development, and Engineering Center:

**Table 13-4. MEP112A Generator Pallet**

| NOMENCLATURE | MAX WEIGHT (POUNDS) | SLING SET | LINK COUNT FRONT/REAR | RECOMMENDED AIRSPEED (KNOTS) |
|---|---|---|---|---|
| MEP813 TQG, Generator Pallet, Sentinel Radar System | 1,600 | 10K | 7/3 | 70 |
| MEP112A, Generator Pallet | 2,150 | 10K | 7/3 | 100 |

**b. Materials.** The following materials are required to rig this load:

**(1)** Sling set (10,000-pound capacity).

**(2)** Tape, adhesive, pressure-sensitive, 2-inch wide roll.

**(3)** Cord, nylon, Type III, 550-pound breaking strength.

**(4)** Webbing, cotton, 1/4-inch, 80-pound breaking strength.

**c. Personnel.** Two persons can prepare and rig this load in 15 minutes.

**d. Procedures.** The following procedures apply to this load:

**(1) Preparation.** Prepare the load using the following steps:

**(a)** Secure all chains and hoses with tape or Type III nylon cord.

**(b)** Secure all lids, doors, vents, and caps with tape or Type III nylon cord.

**(2) Rigging.** Rig the load according to the steps in Figure 13-4.

**(3) Hookup.** The hookup team stands on top of the load. The static wand person discharges the static electricity with the static wand. The hookup person places the apex fitting onto the aircraft cargo hook. The hookup team then moves clear of the load but remains close to the load as the helicopter removes slack from the sling legs. When successful hookup is assured, the hookup team quickly exits the area underneath the helicopter to the designated rendezvous point.

**(4) Derigging.** Derigging is the reverse of the preparation and rigging procedures in steps d (1) and d (2).

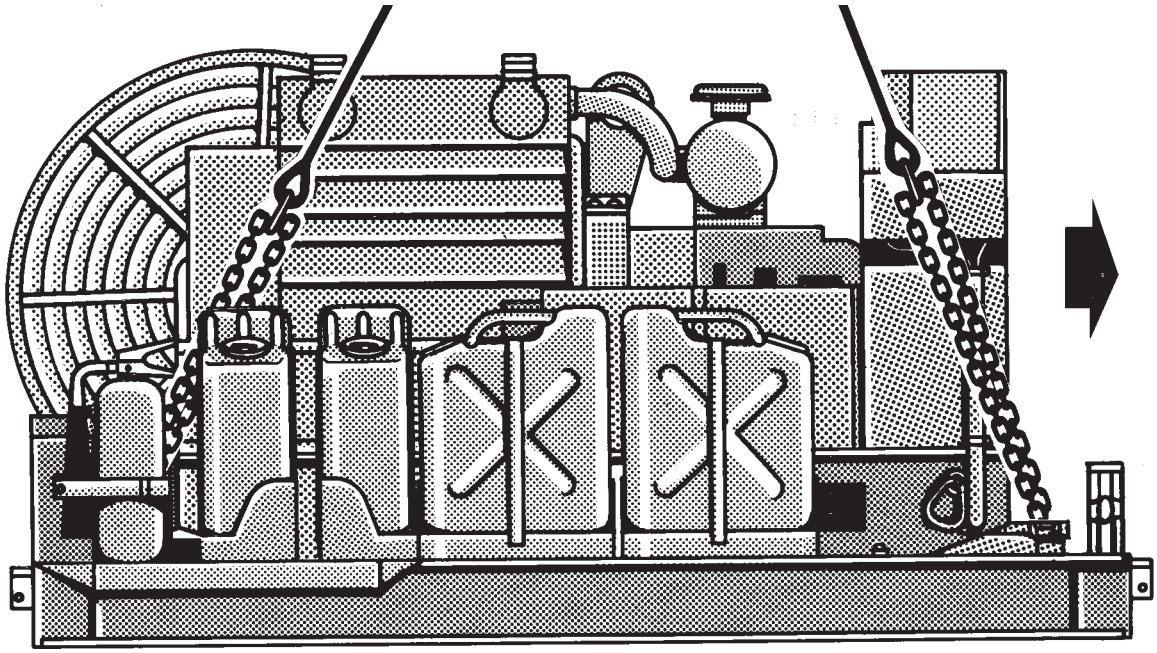

**RIGGING STEPS**

**1.** Position apex fitting on top of the generator set. Route outer sling legs 1 and 2 to the front of the pallet and inner sling legs 3 and 4 to the rear. Sling legs 1 and 3 should be on the left side of the load.

**2.** Loop the chain end of sling leg 1 through the left front lift provision. Place the correct link from Table 13-4 in the grab hook. Repeat with sling leg 2 on the right front lift ring.

**3.** Loop the chain end of sling leg 3 through the left rear lift provision. Place the correct link from Table 13-4 in the grab hook. Repeat with sling leg 4 on the right rear lift ring.

**4.** Cluster and tie or tape (breakaway technique) all sling legs together on top of the unit to prevent entanglement during hookup and lift-off.

*Figure 13-4. MEP112A Generator Pallet*

## 13-6. NATO Air Base Satcom (NABS) Power Pallet AN/TSC-85(V)2

**a. Applicability.** The following item in Table 13-5 is certified for all helicopters with suitable lift capacity by the US Army Natick Research, Development, and Engineering Center:

**Table 13-5. NATO Air Base Satcom (NABS) Power Pallet AN/TSC-85(V)2**

| NOMENCLATURE | MAX WEIGHT (POUNDS) | SLING SET | LINK COUNT FRONT/REAR | RECOMMENDED AIRSPEED (KNOTS) |
|---|---|---|---|---|
| AN/TSC-85(V)2 Power Pallet | 8,630 | 10K | 3/3 | 120 |

**b. Materials.** The following materials are required to rig this load:

**(1)** Sling set (10,000-pound capacity).

**(2)** Tape, adhesive, pressure-sensitive, 2-inch wide roll.

**(3)** Cord, nylon, Type III, 550-pound breaking strength.

**(4)** Webbing, cotton, 1/4-inch, 80-pound breaking strength.

**c. Personnel.** Two persons can prepare and rig this load in 20 minutes.

**d. Procedures.** The following procedures apply to this load:

**(1) Preparation.** Prepare the load using the following steps:

**(a)** Secure all loose equipment and cables on the pallet with tape or Type III nylon cord.

**(b)** Close and secure all access covers, vents, and doors. All exhaust covers must be taped.

**(c)** Remove the cargo cover and store it on the prime mover.

**(2) Rigging.** Rig the load according to the steps in Figure 13-5.

**NOTE: The Required Individual Equipment (RIE) case is designated as the forward end for rigging purposes.**

**(3) Hookup.** The hookup team stands on top of the load. The static wand person discharges the static electricity with the static wand. The hookup person places the apex fitting onto the aircraft cargo hook. The hookup team then moves clear of the load but remains close to the load as the helicopter removes slack from the sling legs. When successful hookup is assured, the hookup team quickly exits the area underneath the helicopter to the designated rendezvous point.

**CAUTION**

**Brief the pilot to relax sling tension and hover to the side of the load when releasing the apex fitting to prevent damage to the pallet.**

**(4) Derigging.** Derigging is the reverse of the preparation and rigging procedures in steps d (1) and d (2).

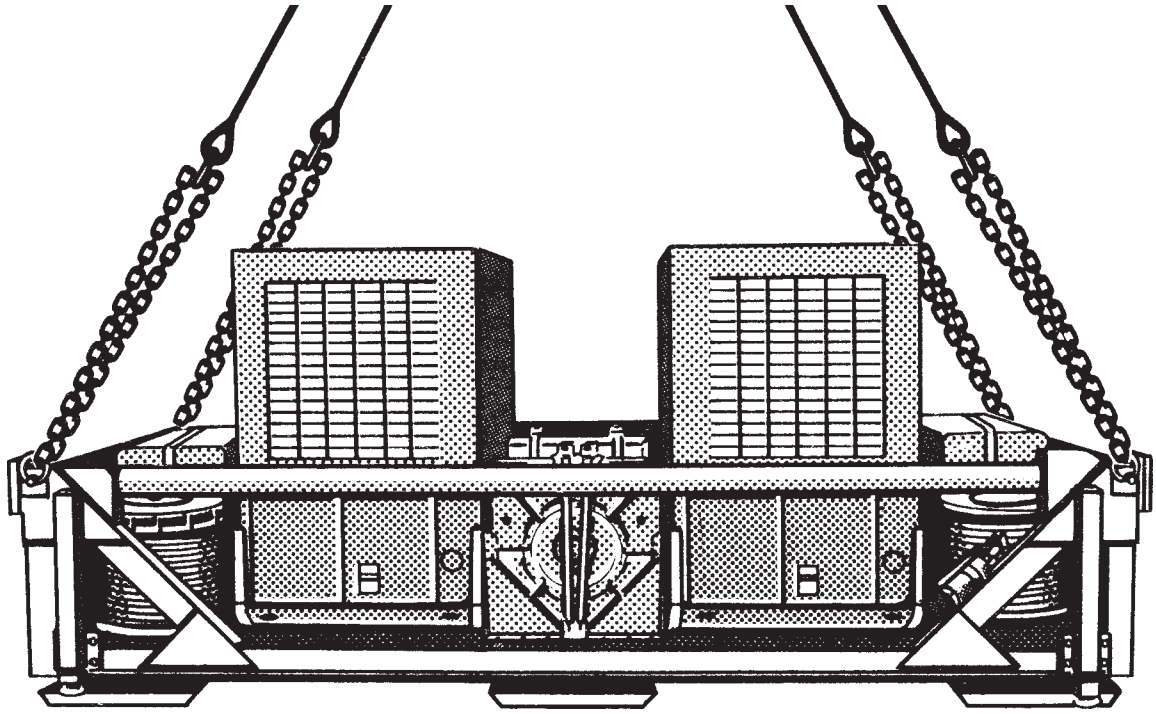

**RIGGING STEPS**

**1.** Position apex fitting on top of the generators. Route outer sling legs 1 and 2 to the front of the pallet and inner sling legs 3 and 4 to the rear. Sling legs 1 and 3 should be on the left side of the load.

**NOTE: Do not use the lift provisions on the generators.**

**2.** Loop the chain end of sling leg 1 through the left front lift provision located on the pallet. Place the correct link from Table 13-5 in the grab hook. Repeat with sling leg 2 on the right front lift ring.

**3.** Loop the chain end of sling leg 3 through the left rear lift provision. Place the correct link from Table 13-5 in the grab hook. Repeat with sling leg 4 on the right rear lift ring.

**4.** Cluster and tie or tape (breakaway technique) all sling legs together on top of the unit to prevent entanglement during hookup and lift-off.

*Figure 13-5. NATO Air Base Satcom (NABS) Power Pallet AN/TSC-85(V)2*

## 13-7. Skid Mounted Tactical Quiet Generator Sets

**a. Applicability.** The following items in Table 13-6 are certified for all helicopters with suitable lift capacity by the US Army Natick Research, Development, and Engineering Center:

**Table 13-6. Skid Mounted Tactical Quiet Generator Sets**

| NOMENCLATURE | MAX WEIGHT (POUNDS) | SLING SET | LINK COUNT FRONT/REAR | RECOMMENDED AIRSPEED (KNOTS) |
|---|---|---|---|---|
| MEP831, 3KW, 60HZ Generator Set | 325 | 10K | 3/3 | 80 |
| MEP802A, 5KW, 60HZ Generator Set | 890 | 10K | 3/3 | 50 |
| MEP812A, 5KW, 400HZ Generator Set | 900 | 10K | 3/3 | 50 |
| MEP803A, 10KW, 60HZ Generator Set | 1,180 | 10K | 3/3 | 50 |
| MEP813A, 10KW, 400HZ Generator Set | 1,280 | 10K | 3/3 | 50 |
| MEP804A, 15KW, 50/60HZ Generator Set | 2,125 | 10K | 3/3 | 70 |
| MEP814A, 15KW, 400HZ Generator Set | 2,240 | 10K | 3/3 | 70 |
| MEP805A, 30KW, 50/60HZ Generator Set | 3,005 | 10K | 3/3 | 70 |
| MEP815A, 30KW, 400HZ Generator Set | 3,015 | 10K | 3/3 | 70 |
| MEP806A, 60KW, 50/60HZ Generator Set | 3,760 | 10K | 3/3 | 80 |
| MEP816A, 60KW, 400HZ Generator Set | 3,850 | 10K | 3/3 | 80 |

**b. Materials.** The following materials are required to rig this load:

**(1)** Sling set (10,000-pound capacity).

**(2)** Tape, adhesive, pressure-sensitive, 2-inch wide roll.

**(3)** Cord, nylon, Type III, 550-pound breaking strength.

**(4)** Webbing, cotton, 1/4-inch, 80-pound breaking strength.

**(5)** Felt sheet, cattle hair, Type IV, 1/2-inch or suitable substitute.

**c. Personnel.** Two persons can prepare and rig this load in 20 minutes.

**d. Procedures.** The following procedures apply to this load:

**(1) Preparation.** Prepare the load using the following steps:

**(a)** Close, lock, and secure all doors and panels with tape.

**(b)** Close and secure the exhaust cover with tape.

**(c)** Close vents on the fuel cap.

**(2) Rigging.** Rig the load according to the steps in Figure 13-6.

**(3) Hookup.** The hookup team stands on top of the load. The static wand person discharges the static electricity with the static wand. The hookup person places the apex fitting onto the aircraft cargo hook. The hookup team then moves clear of the load but remains close to the load as the helicopter removes slack from the sling legs. When successful hookup is assured, the hookup team quickly exits the area underneath the helicopter to the designated rendezvous point.

**(4) Derigging.** Derigging is the reverse of the preparation and rigging procedures in steps d (1) and d (2).

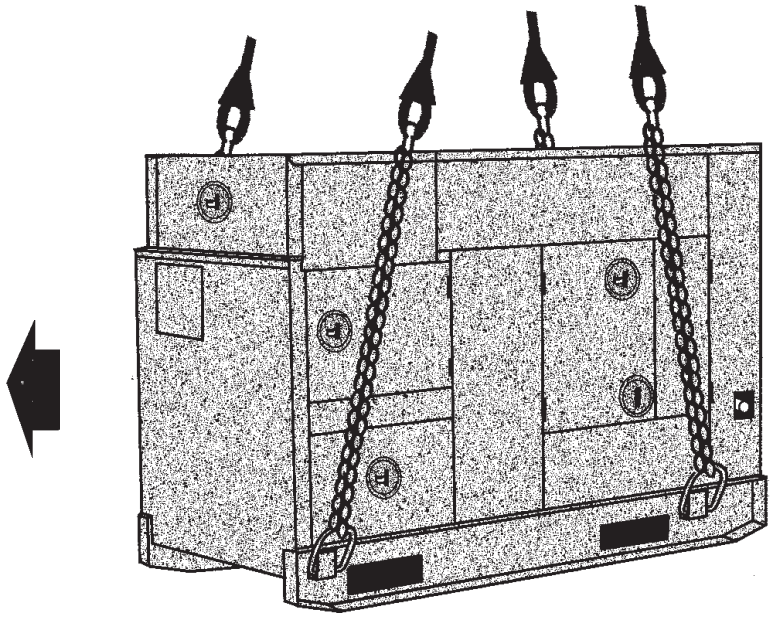

**RIGGING STEPS**

**1.** Position apex fitting on top of the generator. Route outer sling legs 1 and 2 to the front of the generator and inner sling legs 3 and 4 to the rear. Sling legs 1 and 3 should be on the left side of the load.

**2.** Loop the chain end of sling leg 1 through the left front lift provision located at the front of the generator inside of the left skid. Place the correct link from Table 13-6 in the grab hook. Repeat with sling leg 2 on the right front lift provision.

**3.** Loop the chain end of sling leg 3 through the left rear lift provision located at the rear of the generator and inside the skid. Place the correct link from Table 13-6 in the grab hook. Repeat with sling leg 4 on the right rear lift provision.

**4.** Secure the lift provision in the up position with tape and pad the slings where they contact the generator.

**5.** Cluster and tie or tape (breakaway technique) all sling legs together on top of the unit to prevent entanglement during hookup and lift-off.

*Figure 13-6. Skid Mounted Tactical Quiet Generator Sets*

THIS PAGE INTENTIONALLY LEFT BLANK

# CHAPTER 14

# CERTIFIED SINGLE-POINT RIGGING PROCEDURES FOR MISCELLANEOUS EQUIPMENT

## 14-1. Introduction

This chapter contains rigging procedures for single-point lift of miscellaneous equipment that has been certified for sling load. Each rigging procedure is found in a paragraph that includes a description of the load, materials required for rigging, and steps to complete the procedure. An applicability paragraph is also a part of each paragraph and identifies the certified loads. The certified single-point rigging procedures for miscellaneous equipment is in this section. Paragraphs 14-2 through 14-7 give detailed instructions for rigging loads.

**NOTE: Reach Pendants may be used on all single point loads. A static discharge person is not required when using a Reach Pendant.**

## 14-2. Forward Area Refueling Equipment (FARE)

**a. Applicability.** The following item in Table 14-1 is certified for all helicopters with suitable lift capacity by the US Army Natick Research, Development, and Engineering Center:

**Table 14-1. Forward Area Refueling Equipment (FARE)**

| NOMENCLATURE | MAX WEIGHT (POUNDS) | SLING SET | LINK COUNT FRONT/REAR | RECOMMENDED AIRSPEED (KNOTS) |
|---|---|---|---|---|
| Generator, 1.5KW, Fuel Hoses with Reels and Carrying Bags (2 each), Assembly Pump, Fire Extinguishers (3 each) | 820 | 5K Cargo Net | N/A | 60 |

**b. Materials.** The following materials are required to rig this load:

**(1)** Net, cargo (5,000-pound capacity).

**(2)** Tape, adhesive, pressure-sensitive, 2-inch wide roll.

**(3)** Cord, nylon, Type III, 550-pound breaking strength.

**(4)** Webbing, cotton, 1/4-inch, 80-pound breaking strength.

**(5)** Tie-down strap, cargo, CGU-1/B (4 each).

**(6)** Webbing, nylon, tubular, 1/2-inch, 1,000-pound breaking strength.

**c. Personnel.** Two persons can prepare and rig this load in 15 minutes.

**d. Procedures.** The following procedures apply to this load:

**(1) Preparation.** Prepare the load using the following steps:

**(a)** Secure the two fire extinguishers to the inside frame of the fuel hose reels with 1/2-inch tubular nylon webbing. Secure the two fuel hose reels together with Type III nylon cord.

**(b)** Spread a 5,000-pound capacity cargo net on the ground. Center the two fuel hose reels on the net. Place the pump assembly on either side of the reels. Place the

1.5KW generator, with 5-gallon gas can attached, on the opposite side of the reels. Place fuel hose carrying bags in front of the reels. Secure the two carrying bags with the remaining fire extinguisher together with nylon cord. Secure the carrying bag to the reels.

**(2) Rigging.** Rig the load according to the steps in Figure 14-1.

**(3) Hookup.** The hookup team stands alongside the load. The static wand person discharges the static electricity with the static wand. The hookup person places the apex fitting onto the aircraft cargo hook. The hookup team then moves clear of the load but remains close to the load as the helicopter removes slack from the sling legs. When successful hookup is assured, the hookup team quickly exits the area underneath the helicopter to the designated rendezvous point.

**(4) Derigging.** Derigging is the reverse of the preparation and rigging procedures in steps d (1) and d (2).

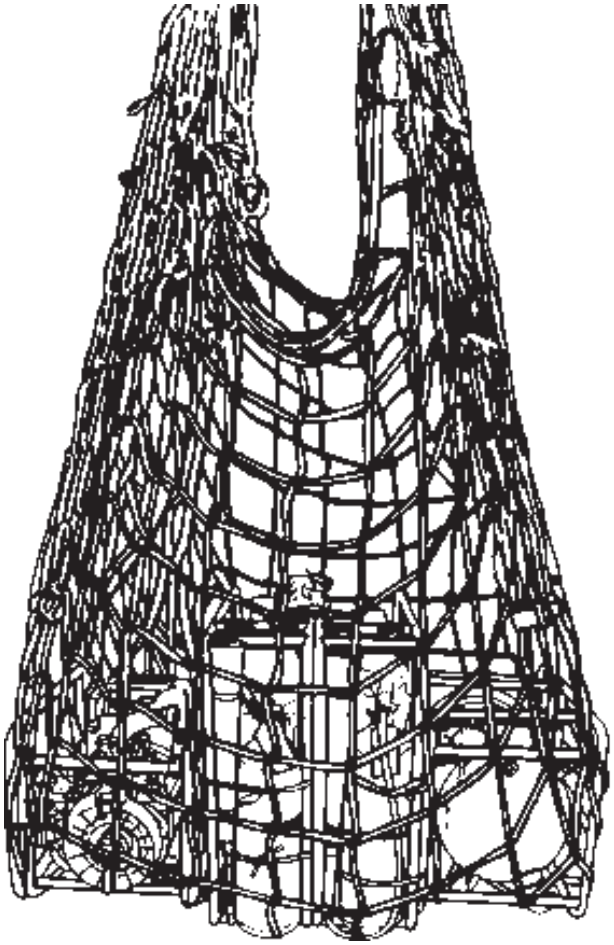

**RIGGING STEPS**

**1.** Inspect the net in accordance with FM 10-450-3.

**2.** Prepare and rig the net in accordance with FM 10-450-3.

*Figure 14-1. Forward Area Refueling Equipment (FARE)*

## 14-3. Fire Extinguisher, Dry Chemical

**a. Applicability.** The following item in Table 14-2 is certified for all helicopters with suitable lift capacity by the US Army Natick Research, Development, and Engineering Center:

**Table 14-2. Fire Extinguisher, Dry Chemical**

| NOMENCLATURE | MAX WEIGHT (POUNDS) | SLING SET | LINK COUNT FRONT/REAR | RECOMMENDED AIRSPEED (KNOTS) |
|---|---|---|---|---|
| Fire Extinguisher, Dry Chemical, Self Contained, TAMCN C4765 | 3,000 | 15K | 5/5 | 100 |

**b. Materials.** The following materials are required to rig this load:

**(1)** Sling set (15,000-pound capacity).

**(2)** Tape, adhesive, pressure-sensitive, 2-inch wide roll.

**(3)** Cord, nylon, Type III, 550-pound breaking strength.

**(4)** Webbing, cotton, 1/4-inch, 80-pound breaking strength.

**c. Personnel.** Two persons can prepare and rig this load in 10 minutes.

**d. Procedures.** The following procedures apply to this load:

**(1) Preparation.** Prepare the load using the following steps:

**(a)** Tie hose reel and nozzle to the frame with Type III nylon cord.

**(b)** Secure or remove all loose attachments. Tape all glass including the gages.

**(2) Rigging.** Rig the load according to the steps in Figure 14-2.

**(3) Hookup.** The hookup team stands alongside the load. The static wand person discharges the static electricity with the static wand. The hookup person places the apex fitting onto the aircraft cargo hook. The hookup team then moves clear of the load but remains close to the load as the helicopter removes slack from the sling legs. When successful hookup is assured, the hookup team quickly exits the area underneath the helicopter to the designated rendezvous point.

**(4) Derigging.** Derigging is the reverse of the preparation and rigging procedures in steps d (1) and d (2).

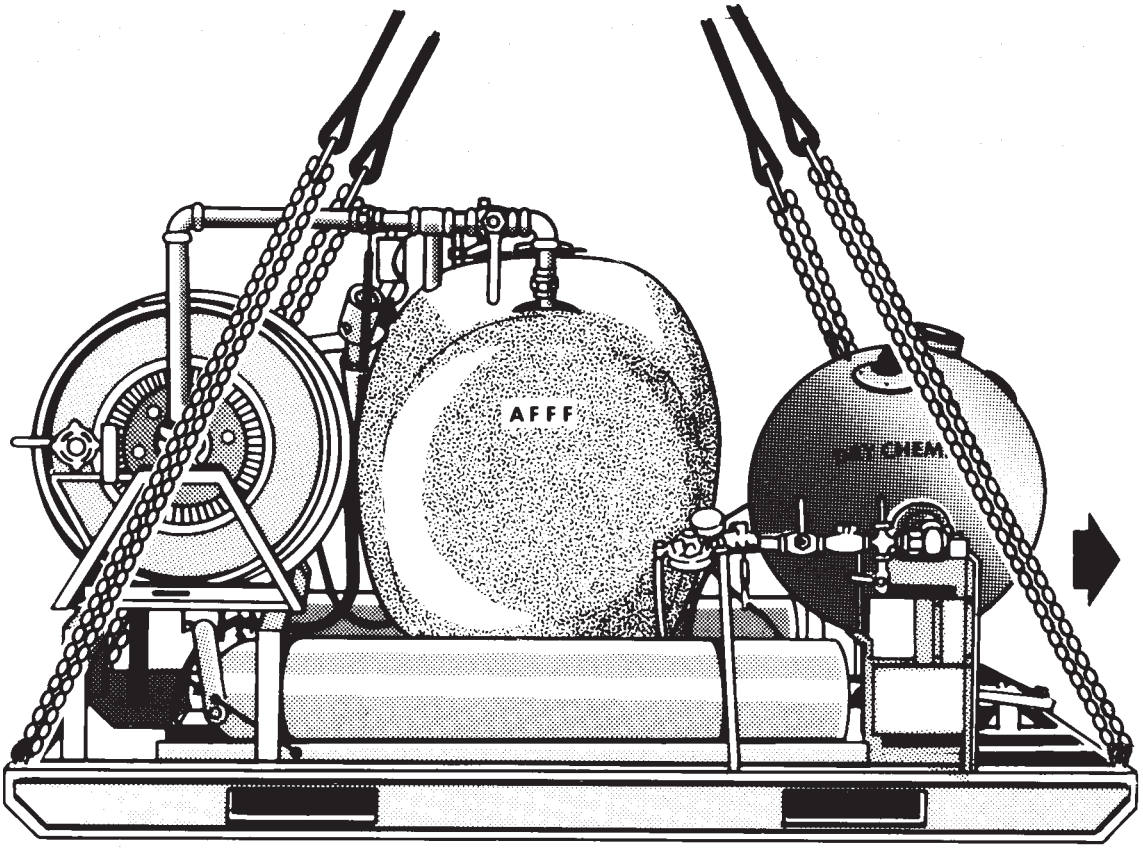


**RIGGING STEPS**

**1.** Position apex fitting/web ring on top of the fire extinguisher. Route outer sling legs 1 and 2 to the front of the fire extinguisher and inner sling legs 3 and 4 to the rear end (hose reel). Sling legs 1 and 3 must be on the left side of the load.

**2.** Loop the chain end of sling leg 1 through the left front lift provision located at the top corner of the frame near the pressure vessel. Place the correct link from Table 14-2 in the grab hook. Repeat with sling leg 2 and the right front lift provision.

**3.** Loop the chain end of sling leg 3 through the left rear lift provision located at the top corner of the frame near the hose reel. Place the correct link from Table 14-2 in the grab hook. Repeat with sling leg 4 and the right rear lift provision.

**4.** Cluster and tie or tape (breakaway technique) all sling legs together on top of the fire extinguisher to prevent entanglement during hookup and lift-off. Pay close attention to the pipes and valves.

*Figure 14-2. Fire Extinguisher, Dry Chemical*

## 14-4. Rigid Raiding Craft

**a. Applicability.** The following item in Table 14-3 is certified for all helicopters with suitable lift capacity by the US Army Natick Research, Development, and Engineering Center:

**Table 14-3. Rigid Raiding Craft**

| NOMENCLATURE | MAX WEIGHT (POUNDS) | SLING SET | LINK COUNT FRONT/REAR | RECOMMENDED AIRSPEED (KNOTS) |
|---|---|---|---|---|
| Rigid Raiding Craft, Fiberglass, 18-foot, TAMCN C5902 | 3,200 | 40K | 5/10 | 75 |

**b. Materials.** The following materials are required to rig this load:

**(1)** Sling set (40,000-pound capacity).

**(2)** Tape, adhesive, pressure-sensitive, 2-inch wide roll.

**(3)** Cord, nylon, Type III, 550-pound breaking strength.

**(4)** Webbing, cotton, 1/4-inch, 80-pound breaking strength.

**c. Personnel.** Two persons can prepare and rig this load in 15 minutes.

**d. Procedures.** The following procedures apply to this load:

**(1) Preparation.** Prepare the load using the following steps:

**(a)** Tighten all straps on the anchor, paddles, cushions, and loose equipment.

**(b)** Stow the boat utility bags in the console. Remove the anchor chain and line and stow in the console. Protect the battery from the chain.

**(c)** Secure the console hatch with tape. Secure the anchor to the deck and secure the loose end of the anchor.

**(d)** Secure the running lights to an inner handrail with tape or Type III nylon cord.

**(e)** Secure the base of the outboard motors tightly to the bar directly above with Type III nylon cord.

**(f)** Tape the compass glass on top of the console.

**(2) Rigging.** Rig the load according to the steps in Figure 14-3.

**(3) Hookup.** The hookup team stands alongside the load. The static wand person discharges the static electricity with the static wand. The hookup person places the apex fitting onto the aircraft cargo hook. The hookup team then moves clear of the load but remains close to the load as the helicopter removes slack from the sling legs. When successful hookup is assured, the hookup team quickly exits the area underneath the helicopter to the designated rendezvous point.

**(4) Derigging.** Derigging is the reverse of the preparation and rigging procedures in steps d (1) and d (2).

**RIGGING STEPS**

**1.** Position apex fitting on top of the boat. Route outer sling legs 1 and 2 to the front (bow end) of the boat and inner sling legs 3 and 4 to the rear end. Sling legs 1 and 3 must be on the left side of the load.

**2.** Loop the chain end of sling leg 1 through the left front lift ring located on the inside of the hull. Place the correct link from Table 14-3 in the grab hook. Repeat with sling leg 2 and the right front lift provision.

**3.** Loop the chain end of sling leg 3 through the left rear lift ring located on the inside of the hull. Place the correct link from Table 14-3 in the grab hook. Repeat with sling leg 4 and the right rear lift provision.

**4.** Cluster and tie or tape (breakaway technique) all sling legs together on top of the boat to prevent entanglement during hookup and lift-off.

***Figure 14-3. Rigid Raiding Craft***

## 14-5. 2.75-inch Rocket Fastpack Pallet

**a. Applicability.** The following items in Table 14-4 are certified for all helicopters with suitable lift capacity by the US Army Natick Research, Development, and Engineering Center:

**Table 14-4. 2.75-inch Rocket Fastpack Pallet**

| NOMENCLATURE | MAX WEIGHT (POUNDS) | SLING SET | LINK COUNT FRONT/REAR | RECOMMENDED AIRSPEED (KNOTS) |
|---|---|---|---|---|
| PA 150 Pallet with Twelve (12) 2.75-inch Rockets | 2,200 | 10K | 3/3 | 60 |
| PA 151 Pallet with Twelve (12) 2.75-inch Rockets | 2,000 | 10K | 3/3 | 60 |

**b. Materials.** The following materials are required to rig this load:

**(1)** Sling set (10,000-pound capacity).

**(2)** Tape, adhesive, pressure-sensitive, 2-inch wide roll.

**(3)** Cord, nylon, Type III, 550-pound breaking strength.

**(4)** Webbing, cotton, 1/4-inch, 80-pound breaking strength.

**c. Personnel.** Two persons can prepare and rig this load in 10 minutes.

**d. Procedures.** The following procedures apply to this load:

**(1) Preparation.** Prepare the load using the following steps:

**(a)** Close the safety latches on the lids of the rocket containers. Secure the lids with Type III nylon cord.

**(b)** Secure the loose ends of any cables, bands, or chains with tape or Type III nylon cord.

**(c)** Ensure the 1-1/4-inch steel banding around the pallet is in serviceable condition and the containers are locked together.

**(d)** Tape the upper corners of the pallet from the top to the second row of rockets.

**(2) Rigging.** Rig the load according to the steps in Figure 14-4.

**(3) Hookup.** The hookup team stands alongside the load. The static wand person discharges the static electricity with the static wand. The hookup person places the apex fitting onto the aircraft cargo hook. The hookup team then moves clear of the load but remains close to the load as the helicopter removes slack from the sling legs. When successful hookup is assured, the hookup team quickly exits the area underneath the helicopter to the designated rendezvous point.

**(4) Derigging.** Derigging is the reverse of the preparation and rigging procedures in steps d (1) and d (2).

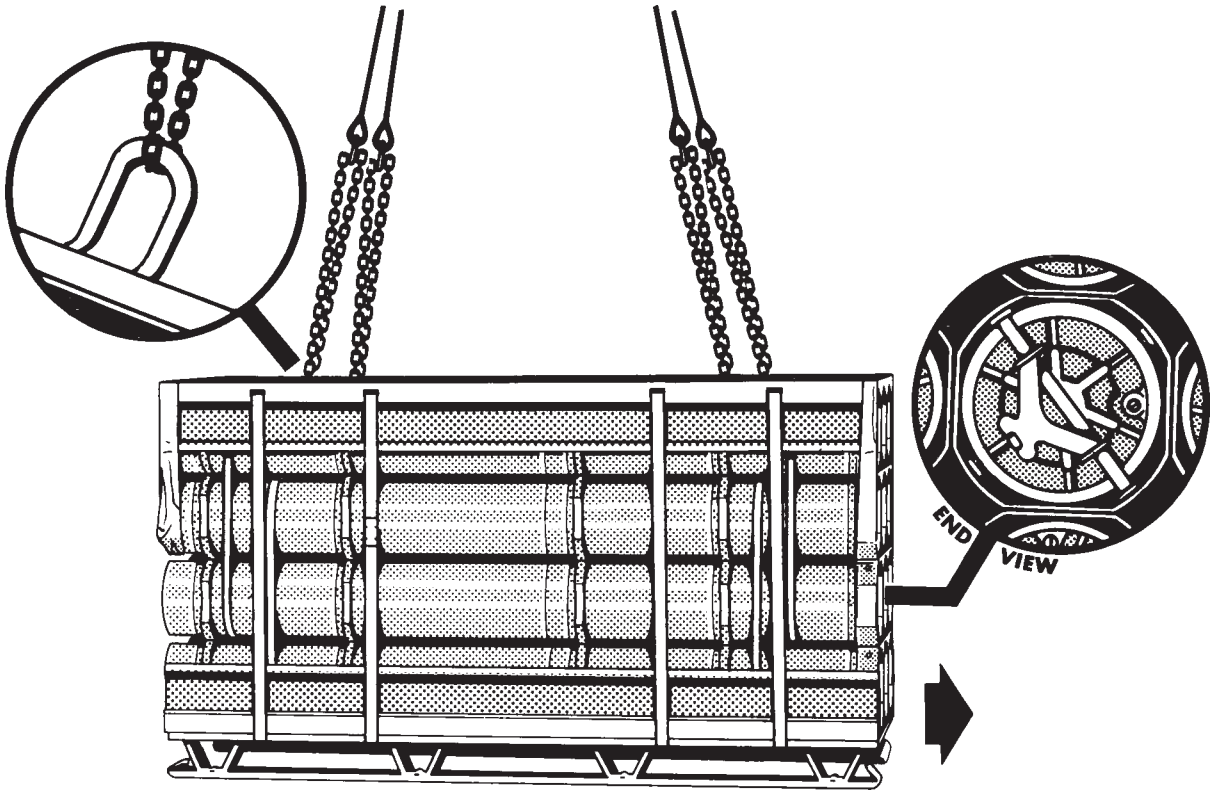


**RIGGING STEPS**

**1.** Position apex fitting on top of the pallet. Route outer sling legs 1 and 2 to the front of the pallet and inner sling legs 3 and 4 to the rear end. Sling legs 1 and 3 must be on the left side of the load.

**2.** Loop the chain end of sling leg 1 through the left front lift provision. Place the correct link from Table 14-4 in the grab hook. Repeat with sling leg 2 and the right front lift provision.

**3.** Loop the chain end of sling leg 3 through the left rear lift provision. Place the correct link from Table 14-4 in the grab hook. Repeat with sling leg 4 and the right rear lift provision.

**4.** Cluster and tie or tape (breakaway technique) all sling legs together on top of the pallet to prevent entanglement during hookup and lift-off.

*Figure 14-4. 2.75-inch Rocket Fastpack Pallet*

## 14-6. Special Divers Air Support System (SDASS)

**a. Applicability.** The following item in Table 14-5 is certified for all helicopters with suitable lift capacity by the US Army Natick Research, Development, and Engineering Center:

**Table 14-5. Special Divers Air Support System (SDASS)**

| NOMENCLATURE | MAX WEIGHT (POUNDS) | SLING SET | LINK COUNT FRONT/REAR | RECOMMENDED AIRSPEED (KNOTS) |
|---|---|---|---|---|
| Four SDASS Racks with Two Empty Air Cylinders each in a 2X2 Configuration | 1,800 | 10K Cargo Net | N/A | 70 |

**b. Materials.** The following materials are required to rig this load:

**(1)** Net, cargo (10,000-pound capacity).

**(2)** Tape, adhesive, pressure-sensitive, 2-inch wide roll.

**(3)** Cord, nylon, Type III, 550-pound breaking strength.

**(4)** Webbing, cotton, 1/4-inch, 80-pound breaking strength.

**(5)** Tie-down strap, cargo, CGU-1/B (4 each).

**(6)** Dunnage material.

**(7)** Plywood 44 X 75 X 1/2-inch (2 each).

**c. Personnel.** Two persons can prepare and rig this load in 20 minutes.

**d. Procedures.** The following procedures apply to this load:

**(1) Preparation.** Prepare the load using the following steps:

**(a)** Inspect the cargo net in accordance with FM 10-450-3.

**(b)** Prepare the plywood sheets and the dunnage.

**(2) Rigging.** Rig the load according to the steps in Figure 14-5.

**(3) Hookup.** The hookup team stands alongside the load. The static wand person discharges the static electricity with the static wand. The hookup person places the apex fitting onto the aircraft cargo hook. The hookup team then moves clear of the load but remains close to the load as the helicopter removes slack from the sling legs. When successful hookup is assured, the hookup team quickly exits the area underneath the helicopter to the designated rendezvous point.

**(4) Derigging.** Derigging is the reverse of the preparation and rigging procedures in steps d (1) and d (2).

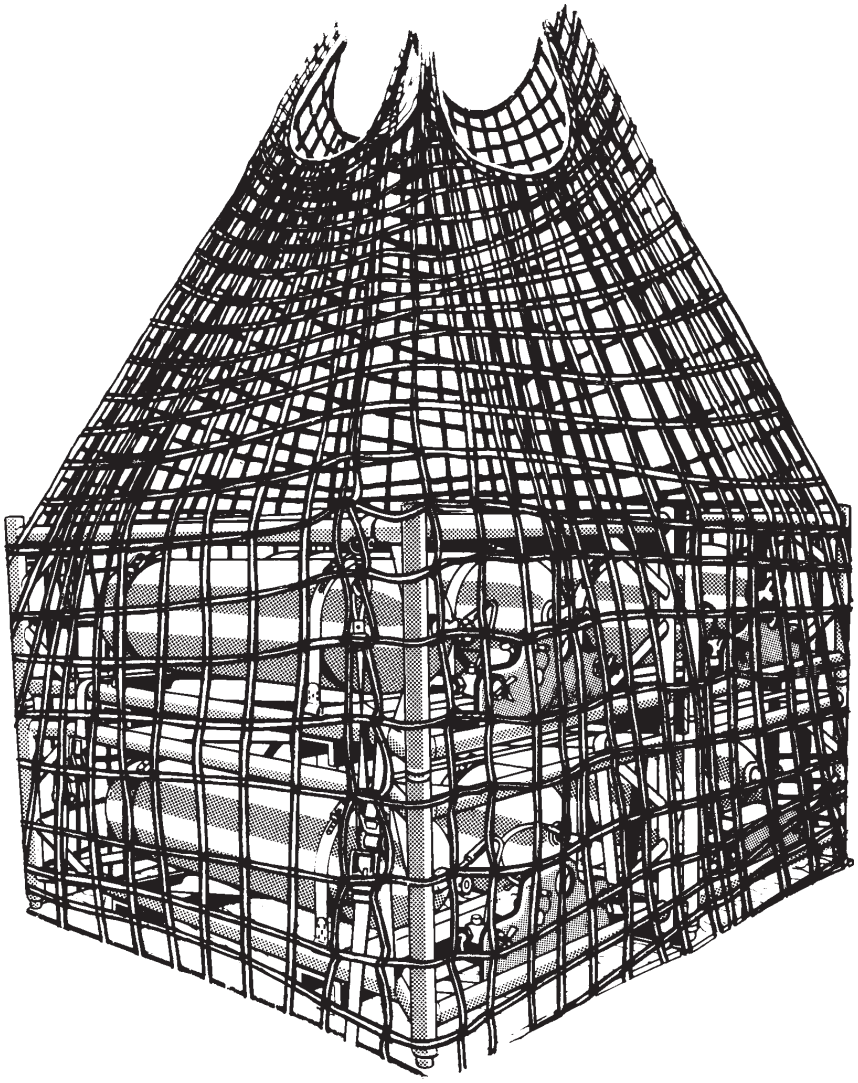

**RIGGING STEPS**

**1.** Spread the cargo net on the ground.

**2.** Position the bottom two racks on the plywood sheets. Secure each rack to the plywood using CGU-1/B tie-down straps.

**3.** Place the remaining two racks on top of the bottom racks, fitting together the feet at each of the five junction points.

**4.** Insert dunnage between the two stacks of racks and secure the dunnage to the stacks with Type III nylon cord.

**5.** Route two CGU-1/B tie-down straps around the lower bottom racks and two CGU-1B tie-down straps around the upper racks.

**6.** Rig the net in accordance with FM 10-450-3.

*Figure 14-5. Special Divers Air Support System (SDASS)*

## 14-7. Two Mobile Oversnow Transport (MOST) Snowmobiles with or without Two Sleds

**a. Applicability.** The following items in Table 14-6 are certified for all helicopters with suitable lift capacity by the US Army Natick Research, Development, and Engineering Center:

**Table 14-6. Two Mobile Oversnow Transport (MOST) Snowmobiles with or without Two Sleds**

| NOMENCLATURE | MAX WEIGHT (POUNDS) | SLING SET | LINK COUNT FRONT/REAR | RECOMMENDED AIRSPEED (KNOTS) |
|---|---|---|---|---|
| Polaris Indy Wide-Track Snowmobile | 638 each | 10K Cargo Net | N/A | 70 |
| Norwegian Pulk Sled, Model BN 2010C | 381 loaded | 10K Cargo Net | N/A | 70 |

**b. Materials.** The following materials are required to rig this load:

**(1)** Net, cargo (10,000-pound capacity) (2 each).

**(2)** One sling leg from a sling set (10,000-pound capacity).

**(3)** Cord, nylon, Type III, 550-pound breaking strength.

**(4)** Webbing, cotton, 1/4-inch, 80-pound breaking strength.

**(5)** Tape, adhesive, pressure-sensitive, 2-inch wide roll.

**(6)** Felt sheet, cattle hair, Type IV, 1/2-inch or suitable substitute.

**(7)** Pad, energy dissipating, honeycomb (2 sheets).

**c. Personnel.** Eight persons can prepare and rig this load in 10 minutes. The large number of personnel is required to lift and position the MOST.

**d. Procedures.** The following procedures apply to this load:

**(1) Preparation.** Prepare the load using the following steps:

**(a)** Inspect the cargo net in accordance with FM 10-450-3.

**(b)** Position the two MOSTs on level ground.

**(c)** Secure the canvas cargo cover over the sled.

**(d)** Secure the fuel cap on the MOST with tape.

**(e)** Remove the snap-off wind screen from the MOST, pad it with felt, and secure it over the seat with Type III nylon cord.

**(2) Rigging.** Rig the load according to the steps in Figure 14-6.

**(3) Hookup.** The hookup team consists of four people. The hookup team stands alongside the load. The static wand person discharges the static electricity with the static wand. One hookup person places the apex fitting onto the aircraft cargo hook. The other two people kneel, one on each side of the load, to ensure the net does not catch on the handle bars, tie-down points, or trailer hitch as the load is lifted. As the first net is lifted off the ground, after successful hookup is assured, the hookup team quickly exits the area underneath the helicopter to the designated rendezvous point. This will ensure the hookup team is not struck by the second cargo net as it is being lifted off the ground.

**NOTE: Brief the pilot to hover to the side after the sleds are on the ground to lower the MOSTs to the ground. Once the MOSTs are on the ground, the pilot must hover to the side before releasing the apex fitting.**

**(4) Derigging.** Derigging is the reverse of the preparation and rigging procedures in steps d (1) and d (2).

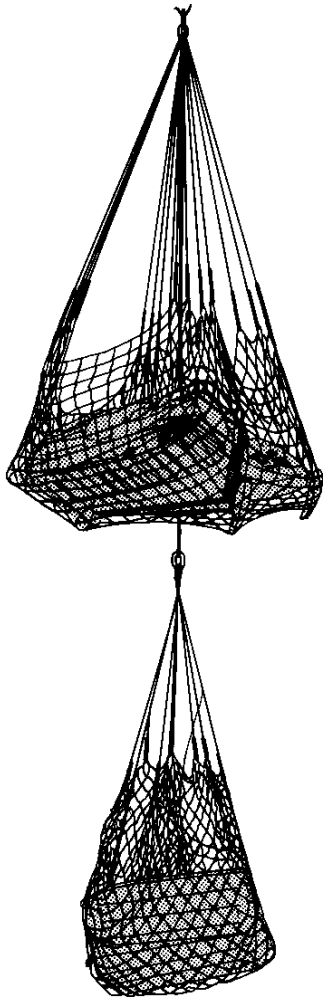

**NOTES:**

**1. Two MOSTs are certified for sling loading without the sleds.**

**2. One MOST and one sled is NOT certified for sling loading. The load does not fly stable.**

**RIGGING STEPS**

**1.** Lay out the first 10,000-pound cargo net. Place two MOSTs side-by-side facing in opposite directions with two sheets of honeycomb between them. Close the net to the apex fitting of the cargo net. Gather the excess net above the load and tape the net together every 3 feet from the apex down (breakaway technique).

**2.** Lay out the second 10,000-pound cargo net next to the first one and center the two sleds on the net side-by-side facing opposite directions. Close the net to the apex fitting of the cargo net. Gather the excess net above the load and tape the net together every 3 feet from the apex down (breakaway technique).

**3.** Attach the chain from the 10,000-pound sling leg to the apex of the cargo net holding the sleds. Insert link 4 in the grabhook. The end of the sling leg with the apex attached is fed under the net holding the two MOSTs along the axis of the honeycomb. It is passed through the net at the center and pulled upward between the two sheets of honeycomb and attached to the apex of the net using the apex. This will allow the sleds to hang directly below the MOST.

***Figure 14-6. Two Mobile Oversnow Transport (MOST) Snowmobiles with or without Two Sleds***

# CHAPTER 15

# SUITABLE SINGLE-POINT RIGGING PROCEDURES FOR WHEELED VEHICLES

## 15-1. Introduction

This chapter contains rigging procedures for single-point lift of wheeled vehicles that are suitable for sling load. Each rigging procedure is found in a paragraph that includes a description of the load, materials required for rigging, and steps to complete the procedure. An applicability paragraph is also a part of each paragraph and identifies the suitable loads. The suitable single-point rigging procedures for wheeled vehicles are in this section. Paragraphs 15-2 through 15-6 give detailed instructions for rigging loads.

**NOTE: Reach Pendants may be used on all single point loads. A static discharge person is not required when using a Reach Pendant.**

## 15-2. M342A2 2 1/2-Ton Dump Truck with Winch

**a. Applicability.** The following item in Table 15-1 is suitable for sling load by all **ARMY** helicopters with suitable lift capacity:

**WARNING**

**DO NOT LIFT THIS LOAD WITH THE ORIGINAL VEHICLE LIFT PROVISION**

**Table 15-1. M342A2 2 1/2-Ton Dump Truck with Winch**

| NOMENCLATURE | MAX WEIGHT (POUNDS) | SLING SET | LINK COUNT FRONT/REAR | RECOMMENDED AIRSPEED (KNOTS) |
|---|---|---|---|---|
| Truck, Dump, 2 1/2-ton, M342A2 | 15,770 | 25K | 3/30 | 85 |

**b. Materials.** The following materials are required to rig this load:

**(1)** Sling set (25,000-pound capacity).

**(2)** Tape, adhesive, pressure-sensitive, 2-inch wide roll.

**(3)** Cord, nylon, Type III, 550-pound breaking strength.

**(4)** Webbing, cotton, 1/4-inch, 80-pound breaking strength.

**c. Personnel.** One person can prepare and rig this load ( after modifying the bed) in 15 minutes.

**d. Procedures.** The following procedures apply to this load:

**(1) Preparation.** Prepare the load using the following steps:

**(a)** Modify the cargo bed. Secure the bed in the down position.

**(b)** Place the transmission in neutral and engage the hand brake.

**(c)** Secure the steering wheel and doors with Type III nylon cord.

**(d)** Tape the windshield wipers to the windshield.

**(e)** Secure the hood with Type III nylon cord routed from the grill through the hood latches.

**(2) Rigging.** Rig the load according to the steps in Figure 15-1.

**(3) Hookup.** The hookup team stands in the cargo bed of the truck. The static wand person discharges the static electricity with the static wand. The hookup person places the apex fitting onto the aircraft cargo hook. The hookup team then moves clear of the load but remains close to the load as the helicopter removes slack from the sling legs. When successful hookup is assured, the hookup team quickly exits the area underneath the helicopter to the designated rendezvous point.

**(4) Derigging.** Derigging is the reverse of the preparation and rigging procedures in steps d (1) and d (2).

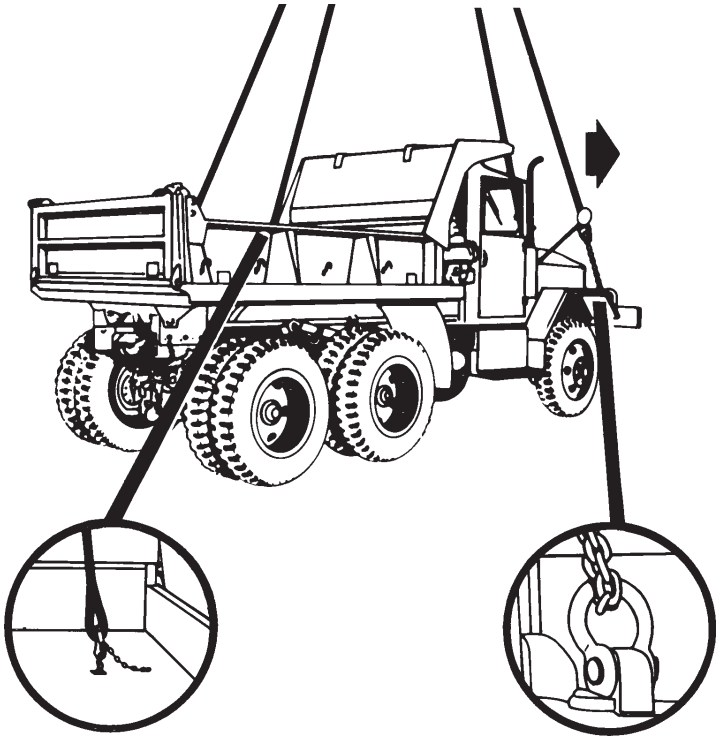

**RIGGING STEPS**

**1.** Position apex fitting on top of the forward end of the dump box. Route outer sling legs 1 and 2 to the front of the truck and inner sling legs 3 and 4 to the rear end. Sling legs 1 and 3 must be on the left side of the load.

**2.** Loop the chain end of sling leg 1 through the left front lift provision located on the left side of the front bumper. Place the correct link from Table 15-1 in the grab hook. Repeat with sling leg 2 and the right front lift provision.

**3.** Loop the chain end of sling leg 3 through the left hole in the floor of the cargo bed, under the lifting pin on the spring shackle between the wheels, and back up through the hole. Place the correct link from Table 15-1 in the grab hook. Repeat with sling leg 4 and the right rear lift provision.

**4.** Cluster and tie or tape (breakaway technique) all sling legs together on top of the truck to prevent entanglement during hookup and lift-off.

***Figure 15-1. M342A2 2 1/2-Ton Dump Truck with Winch***

## 15-3. M35A1/2 2 1/2-Ton Cargo Truck with Winch

**a. Applicability.** The following items in Table 15-2 are suitable for sling load by all **ARMY** helicopters with suitable lift capacity:

**WARNING**

**DO NOT LIFT THIS LOAD WITH THE ORIGINAL VEHICLE LIFT PROVISION**

**Table 15-2. M35A1/2 2 1/2-Ton Cargo Truck with Winch**

| NOMENCLATURE | MAX WEIGHT (POUNDS) | SLING SET | LINK COUNT FRONT/REAR | RECOMMENDED AIRSPEED (KNOTS) |
|---|---|---|---|---|
| Truck, Cargo, 2 1/2-ton, M35A1, with Winch | 13,550 | 25K | 13/3 | 90 |
| Truck, Cargo, 2 1/2-ton, M35A2, with Winch | 13,570 | 25K | 13/3 | 90 |

**b. Materials.** The following materials are required to rig this load:

**(1)** Sling set (25,000-pound capacity).

**(2)** Tape, adhesive, pressure-sensitive, 2-inch wide roll.

**(3)** Cord, nylon, Type III, 550-pound breaking strength.

**(4)** Webbing, cotton, 1/4-inch, 80-pound breaking strength.

**(5)** Padding, cellulose.

**(6)** Tie-down, cargo, CGU-1/B (as required).

**c. Personnel.** Two persons can prepare and rig this load in 25 minutes.

**d. Procedures.** The following procedures apply to this load:

**(1) Preparation.** Prepare the load using the following steps:

**(a)** Remove the bed tarpaulin and bows and secure them in the truck bed with tie-down straps or Type III nylon cord.

**(b)** Remove the cab tarpaulin, lower and secure the windshield, and secure the tarpaulin over the windshield with Type III nylon cord.

**(c)** Secure the hood with Type III nylon cord routed from the grill through the hood latches.

**(d)** Ensure the fuel cap, oil filler cap, radiator cap, and battery caps are properly installed and the battery compartment door is fastened.

**(e)** Secure the seats and doors with Type III nylon cord.

**(f)** Place the transmission in neutral and engage the hand brake.

**(g)** Straighten the front wheels and secure the steering wheel with Type III nylon cord.

**(2) Rigging.** Rig the load according to the steps in Figure 15-2.

**(3) Hookup.** The hookup team stands in the cargo bed of the truck. The static wand person discharges the static electricity with the static wand. The hookup person places the apex fitting onto the aircraft cargo hook. The hookup team then moves clear of the load but remains

close to the load as the helicopter removes slack from the sling legs. When successful hookup is assured, the hookup team quickly exits the area underneath the helicopter to the designated rendezvous point.

**(4) Derigging.** Derigging is the reverse of the preparation and rigging procedures in steps d (1) and d (2).

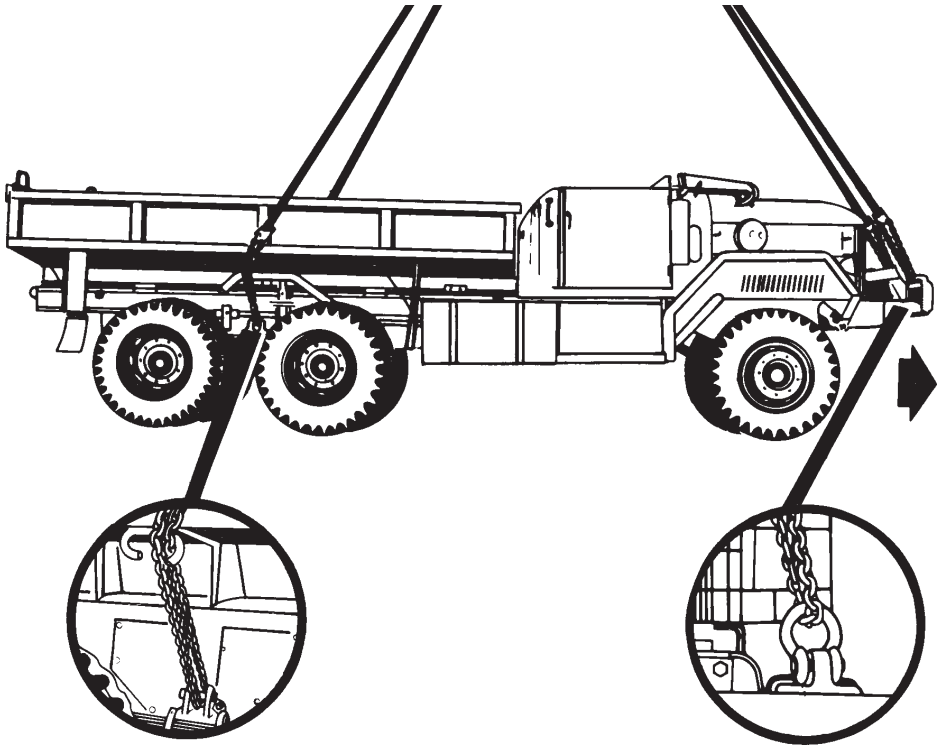

**RIGGING STEPS**

**1.** Position apex fitting in the bed of the truck near the cab. Route outer sling legs 1 and 2 to the front of the truck and inner sling legs 3 and 4 to the rear end. Sling legs 1 and 3 must be on the left side of the load.

**2.** Loop the chain end of sling leg 1 through the left front lift provision located on the left side of the front bumper. Place the correct link from Table 15-2 in the grab hook. Repeat with sling leg 2 and the right front lift provision. Secure the excess chain with Type III nylon cord.

**3.** Loop the chain end of sling leg 3 through the left lifting pin on the spring shackle between the rear wheels. Place the correct link from Table 15-2 in the grab hook. Pull the grab hook up against the side of the truck and tie the chain in the chain guide bracket with 1/4-inch cotton webbing. Ensure the hook side of the grab hook faces outward. Repeat with sling leg 4 and the right rear lift provision.

**4.** Tie the rear grab hooks together across the bed of the truck with 1/4-inch cotton webbing.

**5.** Pull the front sling legs up over the hood and secure the grab hooks to the hood latch attachment with Type III nylon cord.

**6.** Tape sling legs 1 and 2 to the top of the steering wheel. Cluster and tie or tape (breakaway technique) all sling legs together on top of the truck to prevent entanglement during hookup and lift-off.

*Figure 15-2. M35A1/2 2 1/2-Ton Cargo Truck with Winch*

## 15-4. M54A2 5-Ton Cargo Truck with Winch

**a. Applicability.** The following item in Table 15-3 is suitable for sling load by all **ARMY** helicopters with suitable lift capacity:

**WARNING**

**DO NOT LIFT THIS LOAD WITH THE ORIGINAL VEHICLE LIFT PROVISION**

**Table 15-3. M54A2 5-Ton Cargo Truck with Winch**

| NOMENCLATURE | MAX WEIGHT (POUNDS) | SLING SET | LINK COUNT FRONT/REAR | RECOMMENDED AIRSPEED (KNOTS) |
|---|---|---|---|---|
| Truck, Cargo, 5-ton, M54A2, with Winch | 20,782 | 25K | 3/13 | 80 |

**b. Materials.** The following materials are required to rig this load:

**(1)** Sling set (25,000-pound capacity).

**(2)** Tape, adhesive, pressure-sensitive, 2-inch wide roll.

**(3)** Cord, nylon, Type III, 550-pound breaking strength.

**(4)** Webbing, cotton, 1/4-inch, 80-pound breaking strength.

**(5)** Padding, cellulose.

**(6)** Tie-down, cargo, CGU-1/B (as required).

**c. Personnel.** Two persons can prepare and rig this load in 25 minutes.

**d. Procedures.** The following procedures apply to this load:

**(1) Preparation.** Prepare the load using the following steps:

**(a)** Remove the bed tarpaulin and bows and secure them in the truck bed with tie-down straps or Type III nylon cord.

**(b)** Remove the cab tarpaulin, lower and secure the windshield, and secure the tarpaulin over the windshield with Type III nylon cord.

**(c)** Secure the hood with Type III nylon cord routed from the grill through the hood latches.

**(d)** Ensure the fuel cap, oil filler cap, radiator cap, and battery caps are properly installed and the battery compartment door is fastened.

**(e)** Secure the seats and doors with Type III nylon cord.

**(f)** Place the transmission in neutral and engage the hand brake.

**(g)** Straighten the front wheels and secure the steering wheel with Type III nylon cord.

**(2) Rigging.** Rig the load according to the steps in Figure 15-3.

**(3) Hookup.** The hookup team stands in the cargo bed of the truck. The static wand person discharges the static electricity with the static wand. The hookup person places the apex fitting onto the aircraft cargo hook. The hookup team then moves clear of the load but remains close to the load as the helicopter removes slack from the sling legs. When successful hookup is assured, the hookup team quickly exits the area underneath the helicopter to the designated rendezvous point.

**(4) Derigging.** Derigging is the reverse of the preparation and rigging procedures in steps d (1) and d (2).

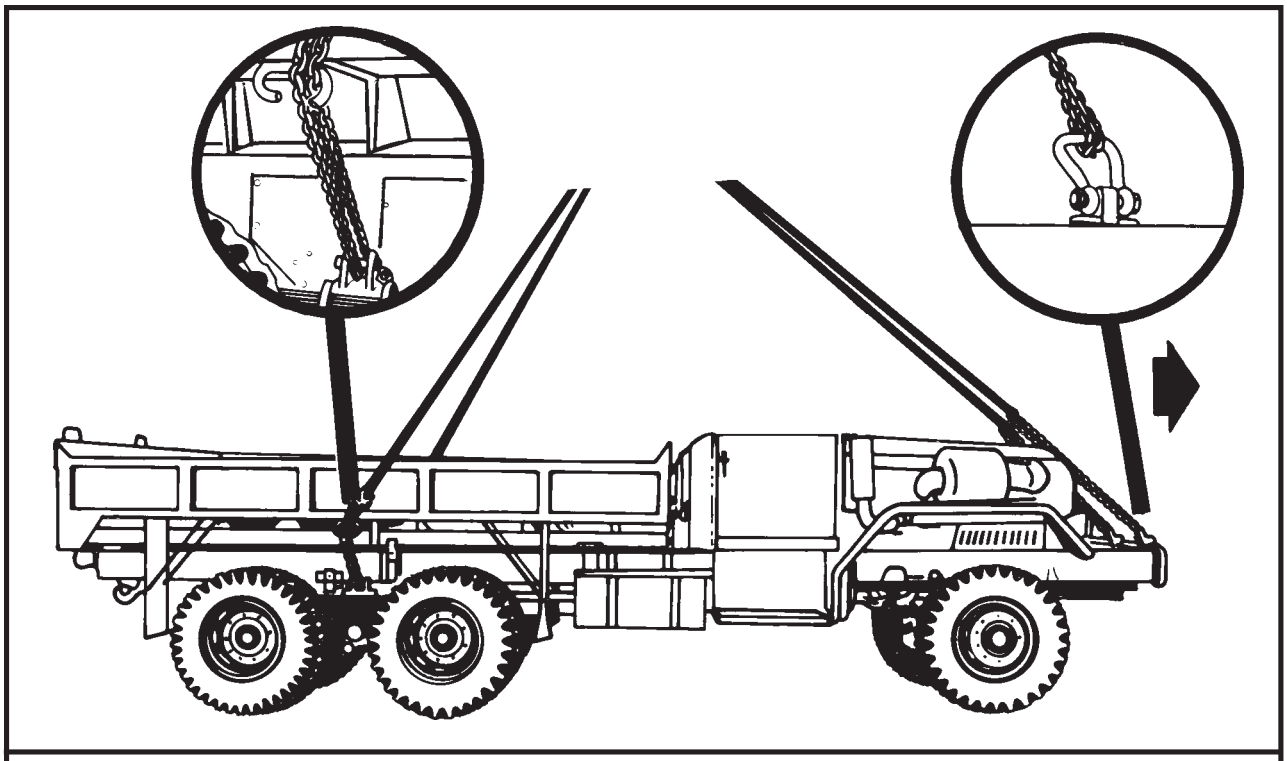

**RIGGING STEPS**

**1.** Position apex fitting in the bed of the truck near the cab. Route outer sling legs 1 and 2 to the front of the truck and inner sling legs 3 and 4 to the rear end. Sling legs 1 and 3 must be on the left side of the load.

**2.** Loop the chain end of sling leg 1 through the left front lift provision located on the left side of the front bumper. Place the correct link from Table 15-3 in the grab hook. Repeat with sling leg 2 and the right front lift provision. Secure the excess chain with Type III nylon cord.

**3.** Loop the chain end of sling leg 3 through the left lifting pin on the spring shackle between the rear wheels. Place the correct link from Table 15-3 in the grab hook. Pull the grab hook up against the side of the truck and tie the chain in the chain guide bracket with 1/4-inch cotton webbing. Ensure the hook side of the grab hook faces outward. Repeat with sling leg 4 and the right rear lift provision.

**4.** Tie the rear grab hooks together across the bed of the truck with 1/4-inch cotton webbing.

**5.** Pull the front sling legs up over the hood and secure the grab hooks to the hood latch attachment with Type III nylon cord.

**6.** Tape sling legs 1 and 2 to the top of the steering wheel. Cluster and tie or tape (breakaway technique) all sling legs together on top of the truck to prevent entanglement during hookup and lift-off.

*Figure 15-3. M54A2 5-Ton Cargo Truck with Winch*

## 15-5. M52A2 or M818 5-Ton Tractor with Winch

**a. Applicability.** The following items in Table 15-4 are suitable for sling load by all **ARMY** helicopters with suitable lift capacity:

**WARNING**

**DO NOT LIFT THIS LOAD WITH THE ORIGINAL VEHICLE LIFT PROVISION**

**Table 15-4. M52A2 or M818 5-Ton Tractor with Winch**

| NOMENCLATURE | MAX WEIGHT (POUNDS) | SLING SET | LINK COUNT FRONT/REAR | RECOMMENDED AIRSPEED (KNOTS) |
|---|---|---|---|---|
| Truck, Tractor, 5-ton, M52A2, with Winch | 18,430 | 25K | 3/43 | 85 |
| Truck, Tractor, 5-ton, M818, with Winch | 20,107 | 25K | 3/43 | 85 |

**b. Materials.** The following materials are required to rig this load:

**(1)** Sling set (25,000-pound capacity).

**(2)** Tape, adhesive, pressure-sensitive, 2-inch wide roll.

**(3)** Cord, nylon, Type III, 550-pound breaking strength.

**(4)** Webbing, cotton, 1/4-inch, 80-pound breaking strength.

**c. Personnel.** Two persons can prepare and rig this load in 15 minutes.

**d. Procedures.** The following procedures apply to this load:

**(1) Preparation.** Prepare the load using the following steps:

**(a)** Place the transmission in neutral and engage the hand brake.

**(b)** Straighten the front wheels and secure the steering wheel with Type III nylon cord. Secure the doors with Type III nylon cord.

**(c)** Place the air hoses in the brackets and secure with Type III nylon cord.

**(2) Rigging.** Rig the load according to the steps in Figure 15-4.

**(3) Hookup.** The hookup team stands on the rear of the hood. The static wand person discharges the static electricity with the static wand. The hookup person places the apex fitting onto the aircraft cargo hook. The hookup team then moves clear of the load but remains close to the load as the helicopter removes slack from the sling legs. When successful hookup is assured, the hookup team quickly exits the area underneath the helicopter to the designated rendezvous point.

**(4) Derigging.** Derigging is the reverse of the preparation and rigging procedures in steps d (1) and d (2).

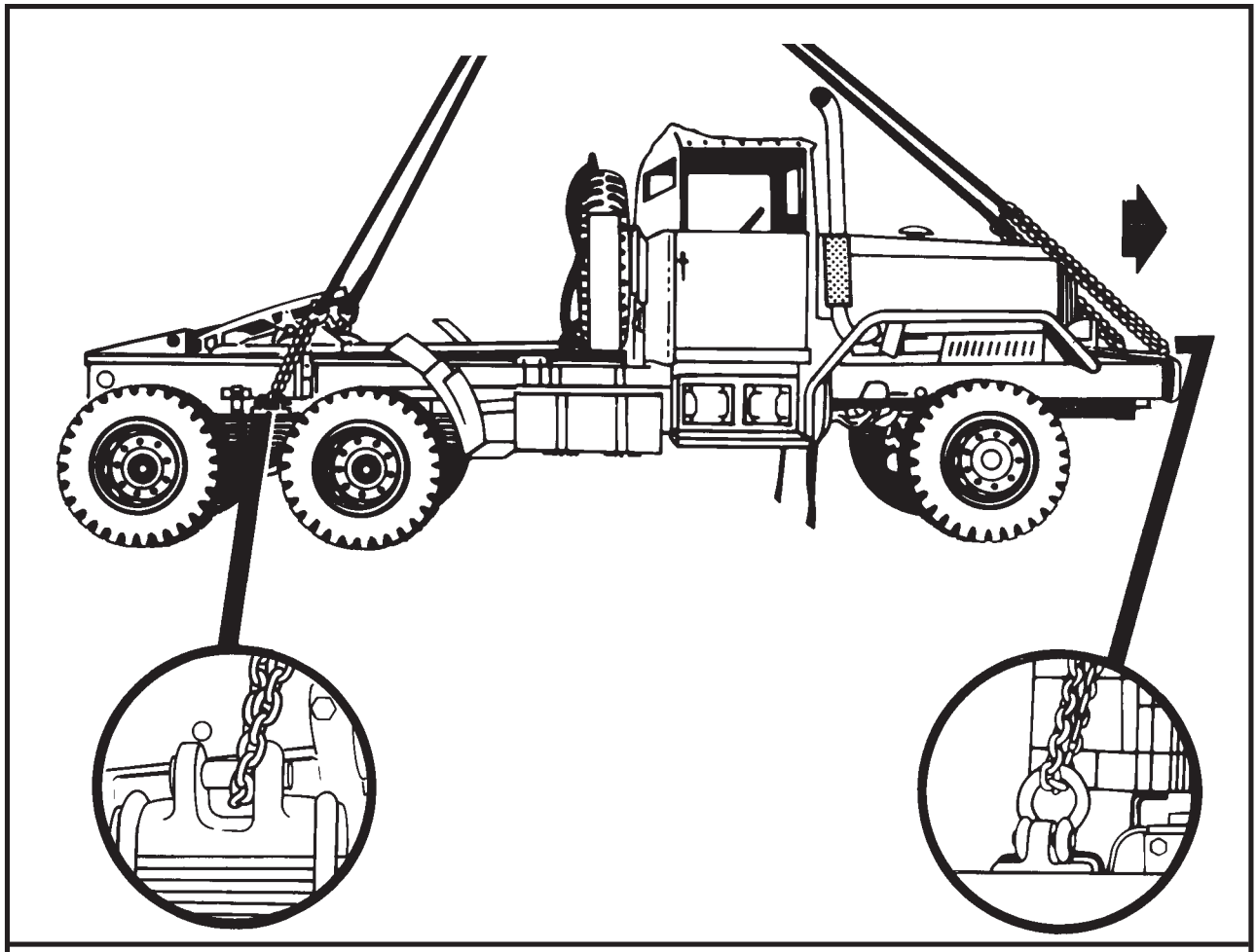

**RIGGING STEPS**

**1.** Position apex fitting on top of the spare tire. Route outer sling legs 1 and 2 to the front of the truck and inner sling legs 3 and 4 to the rear end. Sling legs 1 and 3 must be on the left side of the load.

**2.** Loop the chain end of sling leg 1 through the left front lift provision located on the left side of the front bumper. Place the correct link from Table 15-4 in the grab hook. Repeat with sling leg 2 and the right front lift provision.

**3.** Loop the chain end of sling leg 3 through the left lifting pin on the spring shackle between the rear wheels. Place the correct link from Table 15-4 in the grab hook. Repeat with sling leg 4 and the right rear lift provision. Secure the excess chain with Type III nylon cord.

**4.** Pull the front sling legs up over the hood and secure the grab hooks to the hood latch attachment with Type III nylon cord.

**5.** Cluster and tie or tape (breakaway technique) all sling legs together on top of the spare tire to prevent entanglement during hookup and lift-off.

*Figure 15-4. M52A2 or M818 5-Ton Tractor with Winch*

## 15-6. Crane, Self-Propelled, for Army Aircraft Maintenance and Positioning (SCAMP)

**a. Applicability.** The following item in Table 15-5 is suitable for sling load by all **ARMY** helicopters with suitable lift capacity:

**Table 15-5. Crane, Self-Propelled, for Army Aircraft Maintenance and Positioning (SCAMP)**

| NOMENCLATURE | MAX WEIGHT (POUNDS) | SLING SET | LINK COUNT FRONT/REAR | RECOMMENDED AIRSPEED (KNOTS) |
|---|---|---|---|---|
| Crane, Self-Propelled, Army Aircraft Maintenance and Positioning | 14,600 | 25K | 3/40 | 85 |

**b. Materials.** The following materials are required to rig this load:

**(1)** Sling set (25,000-pound capacity).

**(2)** Tape, adhesive, pressure-sensitive, 2-inch wide roll.

**(3)** Cord, nylon, Type III, 550-pound breaking strength.

**(4)** Webbing, cotton, 1/4-inch, 80-pound breaking strength.

**c. Personnel.** Two persons can prepare and rig this load in 10 minutes.

**d. Procedures.** The following procedures apply to this load:

**(1) Preparation.** Prepare the load using the following steps:

**(a)** Attach the block and tackle to the front pintle hook (the cable must be snug).

**(b)** Rotate the mirrors in toward the cab and tape all the glass.

**(c)** Secure the engine cover, tow bar, and tow wheels in place with Type III nylon cord.

**(d)** Secure all loose equipment, doors, or panels with tape or Type III nylon cord.

**(e)** Place the transmission in neutral and engage the parking brake.

**(2) Rigging.** Rig the load according to the steps in Figure 15-5.

**(3) Hookup.** The hookup team stands between the end of the boom and the engine cover. The static wand person discharges the static electricity with the static wand. The hookup person places the apex fitting onto the aircraft cargo hook. The hookup team then moves clear of the load but remains close to the load as the helicopter removes slack from the sling legs. When successful hookup is assured, the hookup team quickly exits the area underneath the helicopter to the designated rendezvous point.

**(4) Derigging.** Derigging is the reverse of the preparation and rigging procedures in steps d (1) and d (2).

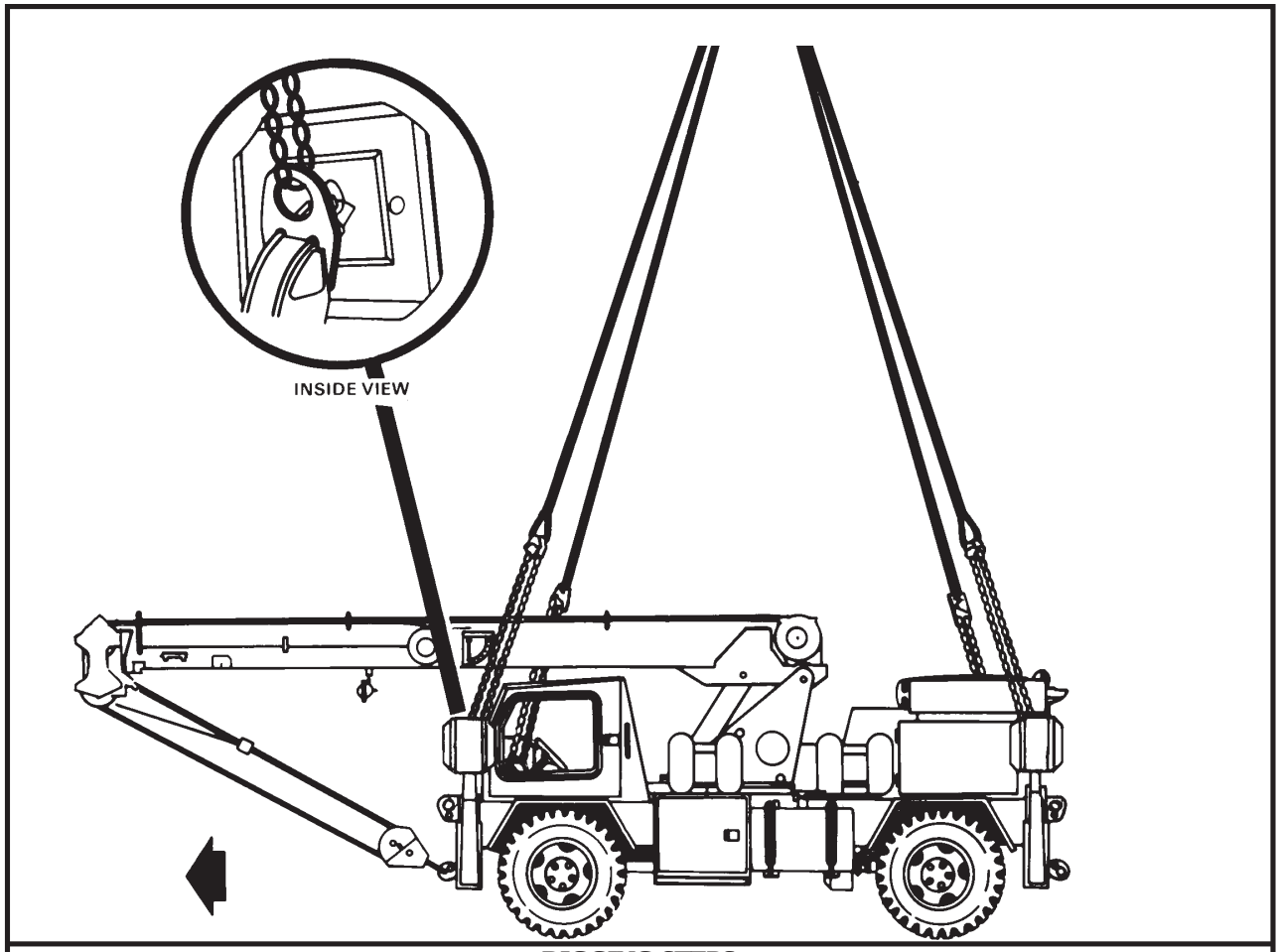


**RIGGING STEPS**

**1.** Position apex fitting on top of the boom. Route outer sling legs 1 and 2 to the front of the crane and inner sling legs 3 and 4 to the rear end. Sling legs 1 and 3 must be on the left side of the load.

**2.** Loop the chain end of sling leg 1 through the left front lift provision located on the left front outrigger. Place the correct link from Table 15-5 in the grab hook. Repeat with sling leg 2 and the right front lift provision.

**3.** Loop the chain end of sling leg 3 through the left rear lift provision located on the left rear outrigger. Place the correct link from Table 15-5 in the grab hook. Repeat with sling leg 4 and the right rear lift provision. Secure the excess chain with Type III nylon cord.

**4.** Cluster and tie or tape (breakaway technique) all sling legs together on top of the crane to prevent entanglement during hookup and lift-off.

**NOTES:**

**1. The rear sling leg routed on the exhaust must be secured above the exhaust pipe to prevent entangling the sling.**

**2. This load will fly with the boom low to prevent the boom from striking the aircraft.**

*Figure 15-5. Crane, Self-Propelled, for Army Aircraft Maintenance and Positioning (SCAMP)*

# CHAPTER 16

# SUITABLE SINGLE-POINT RIGGING PROCEDURES FOR TRAILERS

## 16-1. Introduction

This chapter contains rigging procedures for single-point lift of trailers that are suitable for sling load. Each rigging procedure is found in a paragraph that includes a description of the load, materials required for rigging, and steps to complete the procedure. An applicability paragraph is also a part of each paragraph and identifies the suitable loads. The suitable single-point rigging procedures for trailers are in this section. Paragraphs 16-2 through 16-13 give detailed instructions for rigging loads.

**NOTE: Reach Pendants may be used on all single point loads. A static discharge person is not required when using a Reach Pendant.**

## 16-2. M105 1 1/2-Ton Trailer

**a. Applicability.** The following item in Table 16-1 is suitable for sling load by all **ARMY** helicopters with suitable lift capacity:

**Table 16-1. M105 1 1/2-Ton Trailer**

| NOMENCLATURE | MAX WEIGHT (POUNDS) | SLING SET | LINK COUNT FRONT/REAR | RECOMMENDED AIRSPEED (KNOTS) |
|---|---|---|---|---|
| Trailer, Cargo, 1 1/2-ton, M105 series | 5,750 | 10K | 4/30 | 45 |

**b. Materials.** The following materials are required to rig this load:

**(1)** Sling set (10,000-pound capacity).

**(2)** Tape, adhesive, pressure-sensitive, 2-inch wide roll.

**(3)** Cord, nylon, Type III, 550-pound breaking strength.

**(4)** Webbing, cotton, 1/4-inch, 80-pound breaking strength.

**(5)** Tie-down, cargo, CGU-1/B (as required).

**c. Personnel.** Two persons can prepare and rig this load in 25 minutes.

**d. Procedures.** The following procedures apply to this load:

**(1) Preparation.** Prepare the load using the following steps:

**(a)** Remove the top tarpaulin and bows.

**(b)** Remove the front and rear racks, stow in the slots provided on each side of the trailer, and secure them in place with Type III nylon cord.

**(c)** Stow the bows and tarpaulin in the trailer bed and secure them with Type III nylon cord.

**(d)** Fasten the tailgate in the open position with the chains on each side hooked through the keepers.

**(e)** Secure the cargo in the bed using the CGU-1/B cargo straps.

**(f)** Secure the light cable to the drawbar with tape or Type III nylon cord.

**(g)** Engage the parking brake.

**(h)** If the trailer has modified lift provisions, remove the push pin and rotate the provisions downward.

**(2) Rigging.** Rig the load according to the steps in Figure 16-1.

**(3) Hookup.** The hookup team stands in the cargo bed of the trailer. The static wand person discharges the static electricity with the static wand. The hookup person places the apex fitting onto the aircraft cargo hook. The hookup team then moves clear of the load but remains close to the load as the helicopter removes slack from the sling legs. When successful hookup is assured, the hookup team quickly exits the area underneath the helicopter to the designated rendezvous point.

**(4) Derigging.** Derigging is the reverse of the preparation and rigging procedures in steps d (1) and d (2).

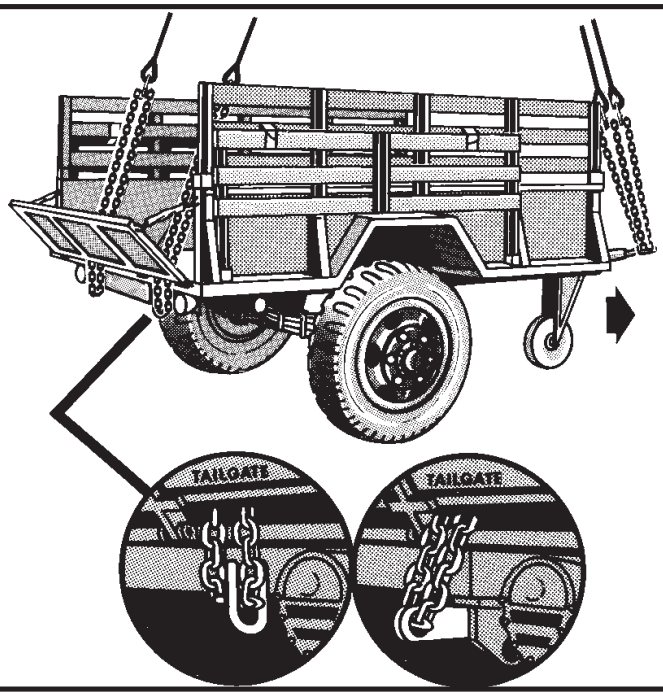


**RIGGING STEPS**

**1.** Position apex fitting in the trailer bed. Route outer sling legs 1 and 2 to the front of the trailer and inner sling legs 3 and 4 to the rear end. Route the rear chains between the tailgate and the bed. Sling legs 1 and 3 must be on the left side of the load.

**2.** Loop the chain end of sling leg 1 through the lunette. Place the correct link from Table 16-1 in the grab hook. Repeat with sling leg 2 on the lunette.

**3.** Loop the chain end of sling leg 3 through the left rear lift provision located at the aft end of the trailer chassis frame. Place the correct link from Table 16-1 in the grab hook. Repeat with sling leg 4 and the right rear lift provision. Secure the excess chain with Type III nylon cord.

**4.** Remove the slack from sling legs 3 and 4. Tape or tie the grab hook or sling leg to the side rack.

**5.** Cluster and tie or tape (breakaway technique) all sling legs together on top of the trailer to prevent entanglement during hookup and lift-off.

*Figure 16-1. M105 1 1/2-Ton Trailer*

## 16-3. M270A1 Semitrailer, Wrecker

**a. Applicability.** The following item in Table 16-2 is suitable for sling load by all **ARMY** helicopters with suitable lift capacity:

**WARNING**

**DO NOT LIFT THIS LOAD WITH THE ORIGINAL VEHICLE LIFT PROVISION**

**Table 16-2. M270A1 Semitrailer, Wrecker**

| NOMENCLATURE | MAX WEIGHT (POUNDS) | SLING SET | LINK COUNT FRONT/REAR | RECOMMENDED AIRSPEED (KNOTS) |
|---|---|---|---|---|
| Semitrailer, Lowbed, Wrecker, 12-ton, 4-wheel | 17,500 | 25K | 55/3 | 80 |

**b. Materials.** The following materials are required to rig this load:

**(1)** Sling set (25,000-pound capacity).

**(2)** Tape, adhesive, pressure-sensitive, 2-inch wide roll.

**(3)** Cord, nylon, Type III, 550-pound breaking strength.

**(4)** Webbing, cotton, 1/4-inch, 80-pound breaking strength.

**c. Personnel.** One person can prepare and rig this load in 10 minutes.

**d. Procedures.** The following procedures apply to this load:

**(1) Preparation.** None required.

**(2) Rigging.** Rig the load according to the steps in Figure 16-2.

**(3) Hookup.** The hookup team stands on the trailer. The static wand person discharges the static electricity with the static wand. The hookup person places the apex fitting onto the aircraft cargo hook. The hookup team then moves clear of the load but remains close to the load as the helicopter removes slack from the sling legs. When successful hookup is assured, the hookup team quickly exits the area underneath the helicopter to the designated rendezvous point.

**(4) Derigging.** Derigging is the reverse of the rigging procedures in step d (2).

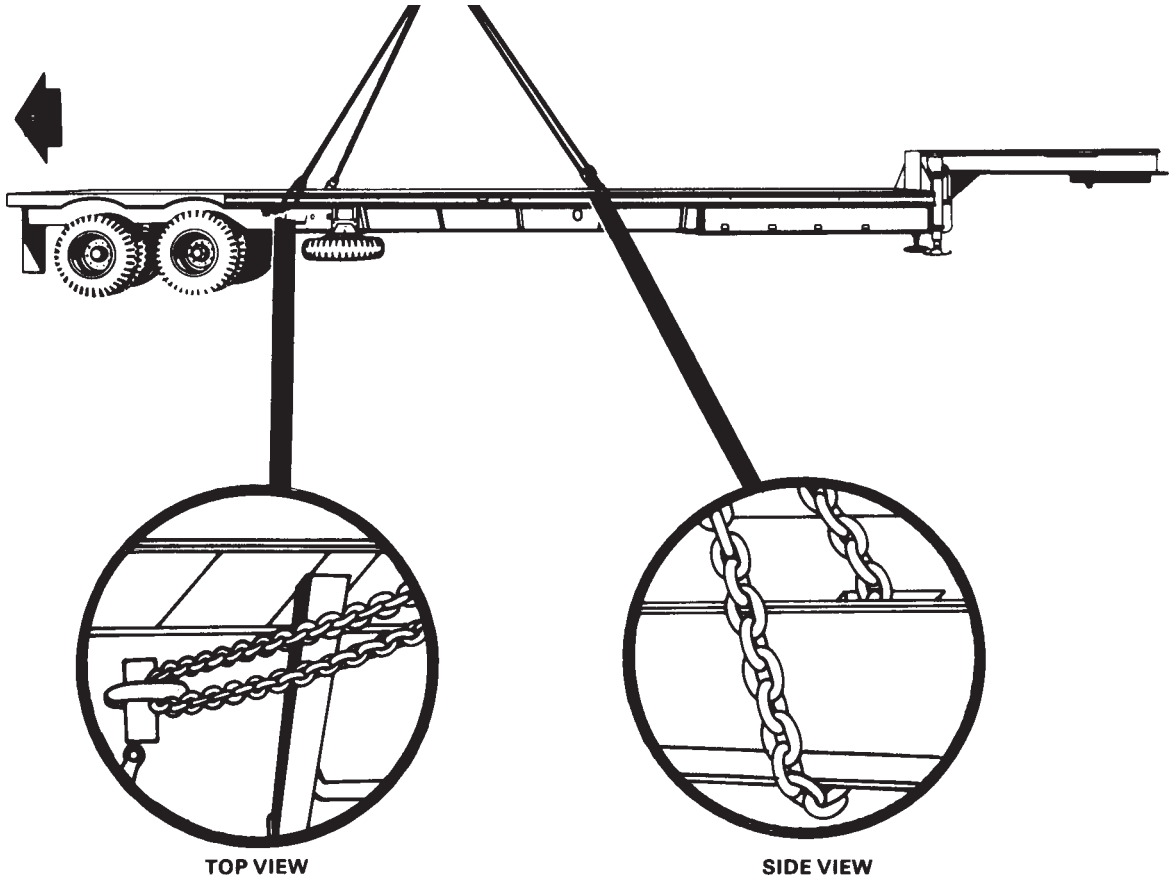


**RIGGING STEPS**

**1.** Position apex fitting on the trailer in the vicinity of the spare tire. Route outer sling legs 1 and 2 to the front of the trailer and inner sling legs 3 and 4 to the rear end. Sling legs 1 and 3 must be on the left side of the load.

**2.** Loop the chain end of sling leg 1 through the third stake pocket on the left side from the forward end of the trailer . Place the correct link from Table 16-2 in the grab hook. Repeat with sling leg 2 on the right side. Secure the excess chain with Type III nylon cord.

**3.** Loop the chain end of sling leg 3 through the left lift provision on the frame forward of the wheels. Place the correct link from Table 16-2 in the grab hook. Repeat with sling leg 4 and the right rear lift provision.

**4.** Cluster and tie or tape (breakaway technique) all sling legs together on top of the trailer to prevent entanglement during hookup and lift-off.

*Figure 16-2. M270A1 Semitrailer, Wrecker*

## 16-4. M172A1 Semitrailer, Lowbed

**a. Applicability.** The following item in Table 16-3 is suitable for sling load by all **ARMY** helicopters with suitable lift capacity:

**WARNING**

**DO NOT LIFT THIS LOAD WITH THE ORIGINAL VEHICLE LIFT PROVISION**

**Table 16-3. M172A1 Semitrailer, Lowbed**

| NOMENCLATURE | MAX WEIGHT (POUNDS) | SLING SET | LINK COUNT FRONT/REAR | RECOMMENDED AIRSPEED (KNOTS) |
|---|---|---|---|---|
| Semitrailer, Lowbed, M172A1, 25-ton | 16,500 | 25K | 3/60 | 80 |

**b. Materials.** The following materials are required to rig this load:

**(1)** Sling set (25,000-pound capacity).

**(2)** Tape, adhesive, pressure-sensitive, 2-inch wide roll.

**(3)** Cord, nylon, Type III, 550-pound breaking strength.

**(4)** Webbing, cotton, 1/4-inch, 80-pound breaking strength.

**c. Personnel.** One person can prepare and rig this load in 10 minutes.

**d. Procedures.** The following procedures apply to this load:

**(1) Preparation.** None required.

**(2) Rigging.** Rig the load according to the steps in Figure 16-3.

**(3) Hookup.** The hookup team stands on the trailer. The static wand person discharges the static electricity with the static wand. The hookup person places the apex fitting onto the aircraft cargo hook. The hookup team then moves clear of the load but remains close to the load as the helicopter removes slack from the sling legs. When successful hookup is assured, the hookup team quickly exits the area underneath the helicopter to the designated rendezvous point.

**(4) Derigging.** Derigging is the reverse of the preparation and rigging procedures in steps d (1) and d (2).

**1.** Position apex fitting on the trailer in the vicinity of the spare tire. Route outer sling legs 1 and 2 to the front of the trailer and inner sling legs 3 and 4 to the rear end. Sling legs 1 and 3 must be on the left side of the load.

**2.** Loop the chain end of sling leg 1 through the forward lift provision on the left side of the trailer. Place the correct link from Table 16-3 in the grab hook. Repeat with sling leg 2 on the right side.

**3.** Loop the chain end of sling leg 3 through the aft lift provision located on the left side of the trailer forward of the wheels. Place the correct link from Table 16-3 in the grab hook. Repeat with sling leg 4 and the right rear lift provision. Secure the excess chain with Type III nylon cord.



**4.** Cluster and tie or tape (breakaway technique) all sling legs together on top of the trailer to prevent en-

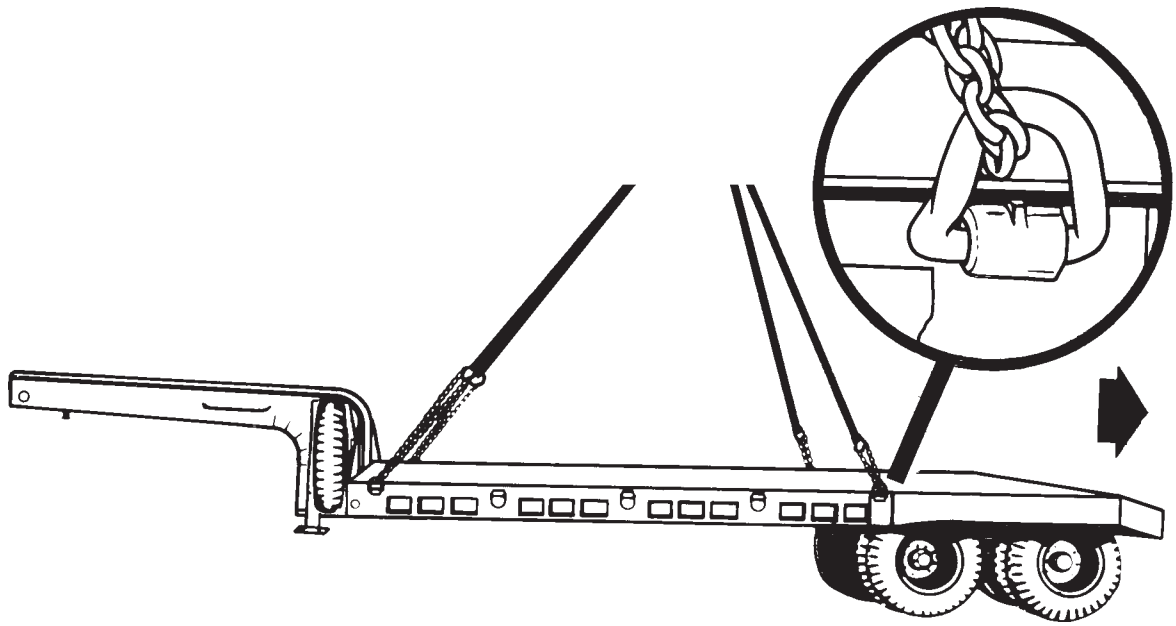

**RIGGING STEPS**

**1.** Position apex fitting on the trailer in the vicinity of the spare tire. Route outer sling legs 1 and 2 to the front of the trailer and inner sling legs 3 and 4 to the rear end. Sling legs 1 and 3 must be on the left side of the load.

**2.** Loop the chain end of sling leg 1 through the forward lift provision on the left side of the trailer. Place the correct link from Table 16-3 in the grab hook. Repeat with sling leg 2 on the right side.

**3.** Loop the chain end of sling leg 3 through the aft lift provision located on the left side of the trailer forward of the wheels. Place the correct link from Table 16-3 in the grab hook. Repeat with sling leg 4 and the right rear lift provision. Secure the excess chain with Type III nylon cord.

**4.** Cluster and tie or tape (breakaway technique) all sling legs together on top of the trailer to prevent entanglement during hookup and lift-off.

*Figure 16-3. M172A1 Semitrailer, Lowbed*

## 16-5. Trailer, Flatbed, Tilt Deck, 15-Ton, 8-Wheel

**a. Applicability.** The following item in Table 16-4 is suitable for sling load by all **ARMY** helicopters with suitable lift capacity:

**WARNING**

**DO NOT LIFT THIS LOAD WITH THE ORIGINAL VEHICLE LIFT PROVISION**

**Table 16-4. Trailer, Flatbed, Tilt Deck, 15-Ton, 8-Wheel**

| NOMENCLATURE | MAX WEIGHT (POUNDS) | SLING SET | LINK COUNT FRONT/REAR | RECOMMENDED AIRSPEED (KNOTS) |
|---|---|---|---|---|
| Trailer, Flatbed, Tilt Deck, 15-ton, 8-Wheel | 9,000 | 10K | 50/30 | 70 |

**b. Materials.** The following materials are required to rig this load:

**(1)** Sling set (10,000-pound capacity).

**(2)** Tape, adhesive, pressure-sensitive, 2-inch wide roll.

**(3)** Cord, nylon, Type III, 550-pound breaking strength.

**(4)** Webbing, cotton, 1/4-inch, 80-pound breaking strength.

**c. Personnel.** Two persons can prepare and rig this load in 10 minutes.

**d. Procedures.** The following procedures apply to this load:

**(1) Preparation.** Prepare the load using the following steps:

**(a)** Secure the air hoses and safety chains to the drawbar with Type III nylon cord.

**(b)** Ensure the spare tire is securely attached.

**(c)** Engage the parking brake.

**(2) Rigging.** Rig the load according to the steps in Figure 16-4.

**(3) Hookup.** The hookup team stands on the trailer. The static wand person discharges the static electricity with the static wand. The hookup person places the apex fitting onto the aircraft cargo hook. The hookup team then moves clear of the load but remains close to the load as the helicopter removes slack from the sling legs. When successful hookup is assured, the hookup team quickly exits the area underneath the helicopter to the designated rendezvous point.

**(4) Derigging.** Derigging is the reverse of the preparation and rigging procedures in steps d (1) and d (2).

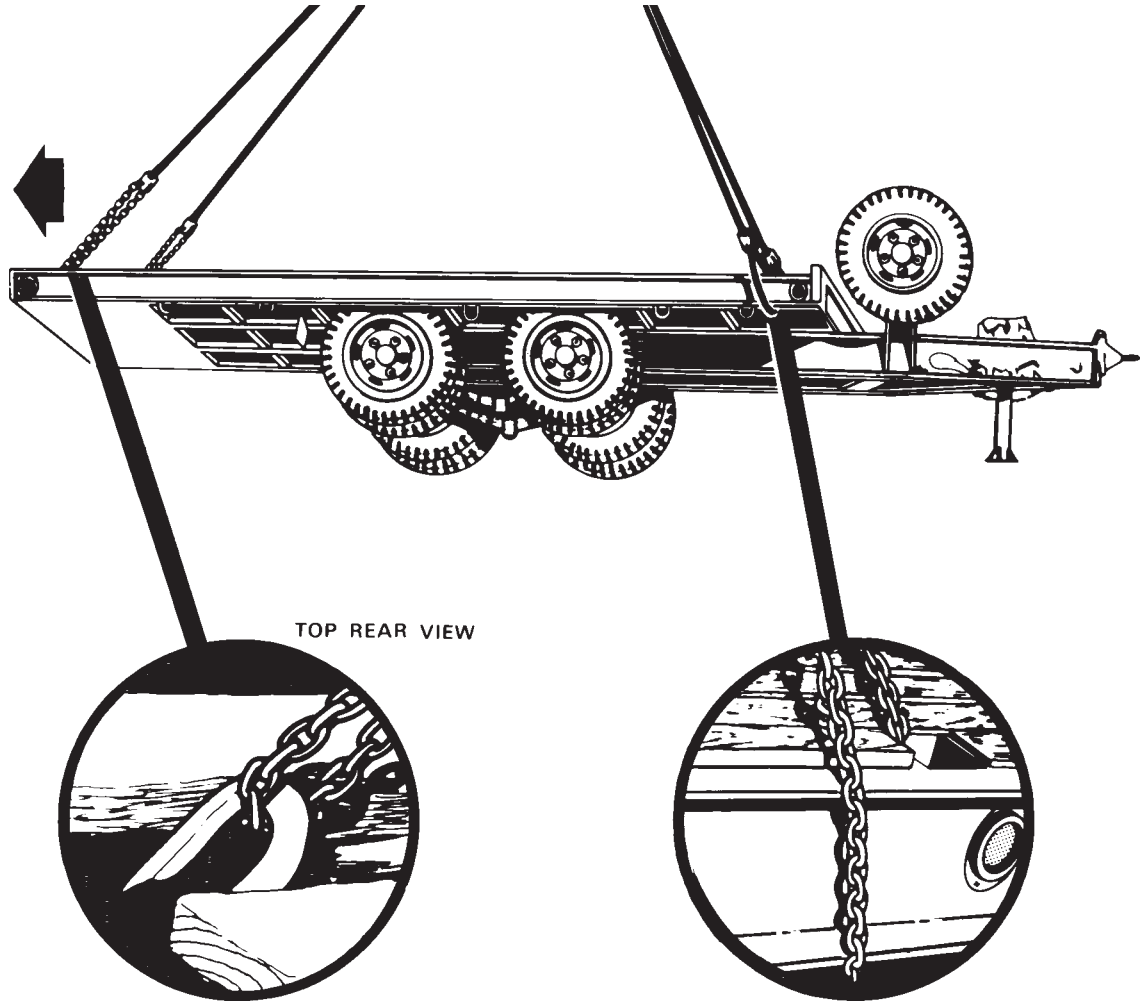


**RIGGING STEPS**

**1.** Position apex fitting on the trailer bed. Route outer sling legs 1 and 2 to the front of the trailer and inner sling legs 3 and 4 to the rear end. Sling legs 1 and 3 must be on the left side of the load.

**2.** Loop the chain end of sling leg 1 through the first hole on the side of the trailer on the left front corner. Place the correct link from Table 16-4 in the grab hook. Repeat with sling leg 2 on the right side. Secure the excess chain with Type III nylon cord.

**3.** Loop the chain end of sling leg 3 through the lift ring located on top of the trailer in the left rear corner. Place the correct link from Table 16-4 in the grab hook. Repeat with sling leg 4 and the right rear lift provision. Secure the excess chain with Type III nylon cord.

**4.** Cluster and tie or tape (breakaway technique) all sling legs together on top of the trailer to prevent entanglement during hookup and lift-off.

*Figure 16-4. Trailer, Flatbed, Tilt Deck, 15-Ton, 8-Wheel*

## 16-6. Trailer-Mounted Welding Shop

**a. Applicability.** The following item in Table 16-5 is suitable for sling load by all **ARMY** helicopters with suitable lift capacity:

**Table 16-5. Trailer-Mounted Welding Shop**

| NOMENCLATURE | MAX WEIGHT (POUNDS) | SLING SET | LINK COUNT FRONT/REAR | RECOMMENDED AIRSPEED (KNOTS) |
|---|---|---|---|---|
| Welding Shop, Trailer Mounted | 2,960 | 10K | 10/65 | 110 |

**b. Materials.** The following materials are required to rig this load:

**(1)** Sling set (10,000-pound capacity).

**(2)** Tape, adhesive, pressure-sensitive, 2-inch wide roll.

**(3)** Cord, nylon, Type III, 550-pound breaking strength.

**(4)** Webbing, cotton, 1/4-inch, 80-pound breaking strength.

**c. Personnel.** Two persons can prepare and rig this load in 15 minutes.

**d. Procedures.** The following procedures apply to this load:

**(1) Preparation.** Prepare the load using the following steps:

**(a)** Secure all tie-down handles on tanks with Type III nylon cord. Secure the safety chains and intervehicular cable to the trailer tongue with tape or Type III nylon cord.

**(b)** Ensure all covers, doors, lids, and latches are securely fastened.

**(c)** Engage the parking brake.

**(2) Rigging.** Rig the load according to the steps in Figure 16-5.

**(3) Hookup.** The hookup team stands on the platform to the rear of the trailer near the vise. The static wand person discharges the static electricity with the static wand. The hookup person places the apex fitting onto the aircraft cargo hook. The hookup team then moves clear of the load but remains close to the load as the helicopter removes slack from the sling legs. When successful hookup is assured, the hookup team quickly exits the area underneath the helicopter to the designated rendezvous point.

**(4) Derigging.** Derigging is the reverse of the preparation and rigging procedures in steps d (1) and d (2).

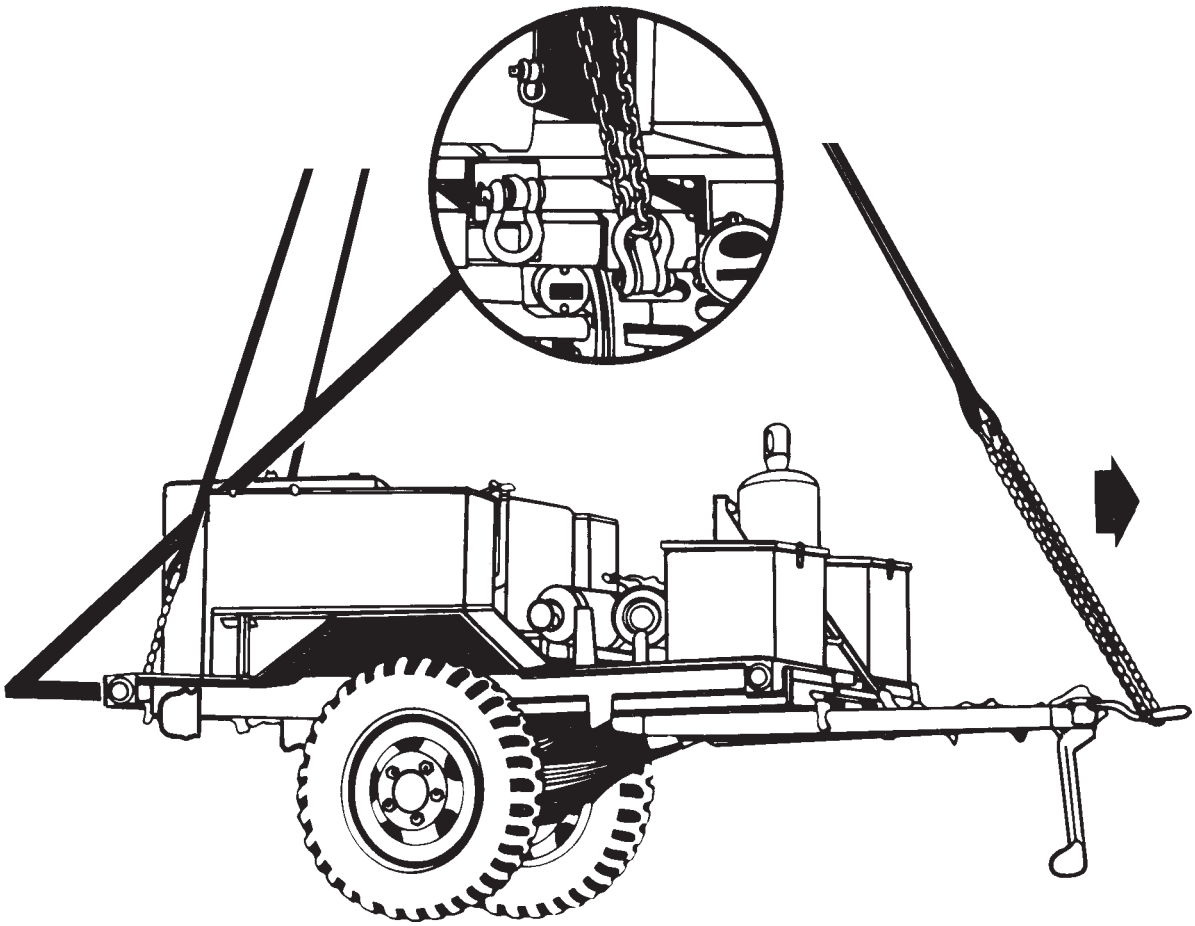

**RIGGING STEPS**

**1.** Position apex fitting on top of the center of the load. Route outer sling legs 1 and 2 to the front of the trailer and inner sling legs 3 and 4 to the rear end. Sling legs 1 and 3 must be on the left side of the load.

**2.** Loop the chain end of sling leg 1 through the lunette of the trailer. Place the correct link from Table 16-5 in the grab hook. Repeat with sling leg 2 on the right side. Secure the excess chain with Type III nylon cord.

**3.** Loop the chain end of sling leg 3 through the left rear lift provision located on the left rear corner of the trailer. Place the correct link from Table 16-5 in the grab hook. Repeat with sling leg 4 and the right rear lift provision. Secure the excess chain with Type III nylon cord.

**4.** Cluster and tie or tape (breakaway technique) all sling legs together on top of the trailer to prevent entanglement during hookup and lift-off.

*Figure 16-5. Trailer-Mounted Welding Shop*

## 16-7. LEB 300 Welding Machine on 2 1/2-ton Trailer Chassis

**a. Applicability.** The following item in Table 16-6 is suitable for sling load by all **ARMY** helicopters with suitable lift capacity:

**Table 16-6. LEB 300 Welding Machine on 2 1/2-ton Trailer Chassis**

| NOMENCLATURE | MAX WEIGHT (POUNDS) | SLING SET | LINK COUNT FRONT/REAR | RECOMMENDED AIRSPEED (KNOTS) |
|---|---|---|---|---|
| Welding Machine, Arc, LEB 300, on 2 1/2-ton Trailer | 5,310 | 10K | 28/3 | 100 |

**b. Materials.** The following materials are required to rig this load:

**(1)** Sling set (10,000-pound capacity).

**(2)** Tape, adhesive, pressure-sensitive, 2-inch wide roll.

**(3)** Cord, nylon, Type III, 550-pound breaking strength.

**(4)** Webbing, cotton, 1/4-inch, 80-pound breaking strength.

**(5)** Chock blocks (2 each) (addition to OVE blocks).

**c. Personnel.** One person can prepare and rig this load in 10 minutes.

**d. Procedures.** The following procedures apply to this load:

**(1) Preparation.** Prepare the load using the following steps:

**(a)** Place chock blocks in front and behind the wheels.

**(b)** Secure the brake hoses, safety hoses, and chains to the trailer tongue with tape or Type III nylon cord.

**(c)** Secure the OVE chock blocks on the trailer racks with Type III nylon cord.

**(d)** Close and secure all lids, doors, and caps.

**(2) Rigging.** Rig the load according to the steps in Figure 16-6.

**(3) Hookup.** The hookup team stands on the platform to the rear of the trailer near the vise. The static wand person discharges the static electricity with the static wand. The hookup person places the apex fitting onto the aircraft cargo hook. The hookup team then moves clear of the load but remains close to the load as the helicopter removes slack from the sling legs. When successful hookup is assured, the hookup team quickly exits the area underneath the helicopter to the designated rendezvous point.

**(4) Derigging.** Derigging is the reverse of the preparation and rigging procedures in steps d (1) and d (2).

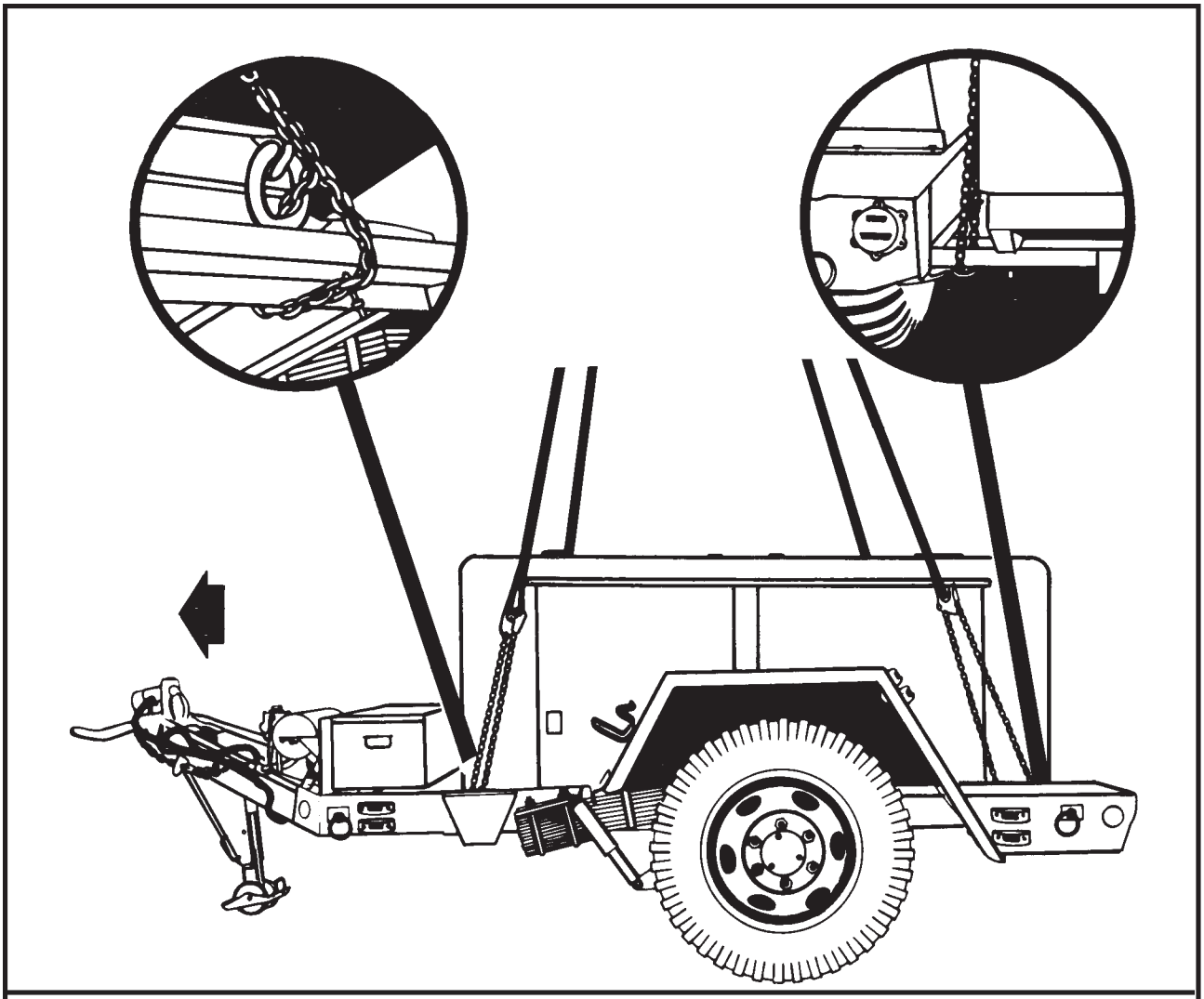

**RIGGING STEPS**

**1.** Position apex fitting on top of the welding machine. Route outer sling legs 1 and 2 to the front of the trailer and inner sling legs 3 and 4 to the rear. Sling legs 1 and 3 must be on the left side of the load.

**2.** Loop the chain end of sling leg 1 down through the left front lift provision on the LEB 300 arc welder, around the trailer frame, and back up by the welder. Place the correct link from Table 16-6 in the grab hook. Repeat with sling leg 2 on the right side. Secure the excess chain with Type III nylon cord.

**3.** Loop the chain end of sling leg 3 around the rear crossmember and back up by the welder on the left rear corner of the trailer. Place the correct link from Table 16-6 in the grab hook. Repeat with sling leg 4 and the right rear corner of the trailer.

**4.** Cluster and tie or tape (breakaway technique) all sling legs together on top of the welder to prevent entanglement during hookup and lift-off.

*Figure 16-6. LEB 300 Welding Machine on 2 1/2-ton Trailer Chassis*

## 16-8. Trailer-Mounted Compressor, Reciprocating

**a. Applicability.** The following item in Table 16-7 is suitable for sling load by all **ARMY** helicopters with suitable lift capacity:

**Table 16-7. Trailer-Mounted Compressor, Reciprocating**

| NOMENCLATURE | MAX WEIGHT (POUNDS) | SLING SET | LINK COUNT FRONT/REAR | RECOMMENDED AIRSPEED (KNOTS) |
|---|---|---|---|---|
| Trailer-Mounted Compressor, Reciprocating | 900 | 10K | 10/15 | 90 |

**b. Materials.** The following materials are required to rig this load:

**(1)** Sling set (10,000-pound capacity).

**(2)** Tape, adhesive, pressure-sensitive, 2-inch wide roll.

**(3)** Cord, nylon, Type III, 550-pound breaking strength.

**(4)** Webbing, cotton, 1/4-inch, 80-pound breaking strength.

**c. Personnel.** Two persons can prepare and rig this load in 10 minutes.

**d. Procedures.** The following procedures apply to this load:

**(1) Preparation.** Prepare the load using the following steps:

**(a)** Secure the front leg in the down position.

**(b)** Secure the brake hoses, safety hoses, and chains to the trailer tongue with tape or Type III nylon cord.

**(c)** Close and secure all lids, doors, and caps.

**(d)** Engage parking brake.

**(2) Rigging.** Rig the load according to the steps in Figure 16-7.

**(3) Hookup.** The hookup team stands along side the trailer. The static wand person discharges the static electricity with the static wand. The hookup person places the apex fitting onto the aircraft cargo hook. The hookup team then moves clear of the load but remains close to the load as the helicopter removes slack from the sling legs. When successful hookup is assured, the hookup team quickly exits the area underneath the helicopter to the designated rendezvous point.

**(4) Derigging.** Derigging is the reverse of the preparation and rigging procedures in steps d (1) and d (2).

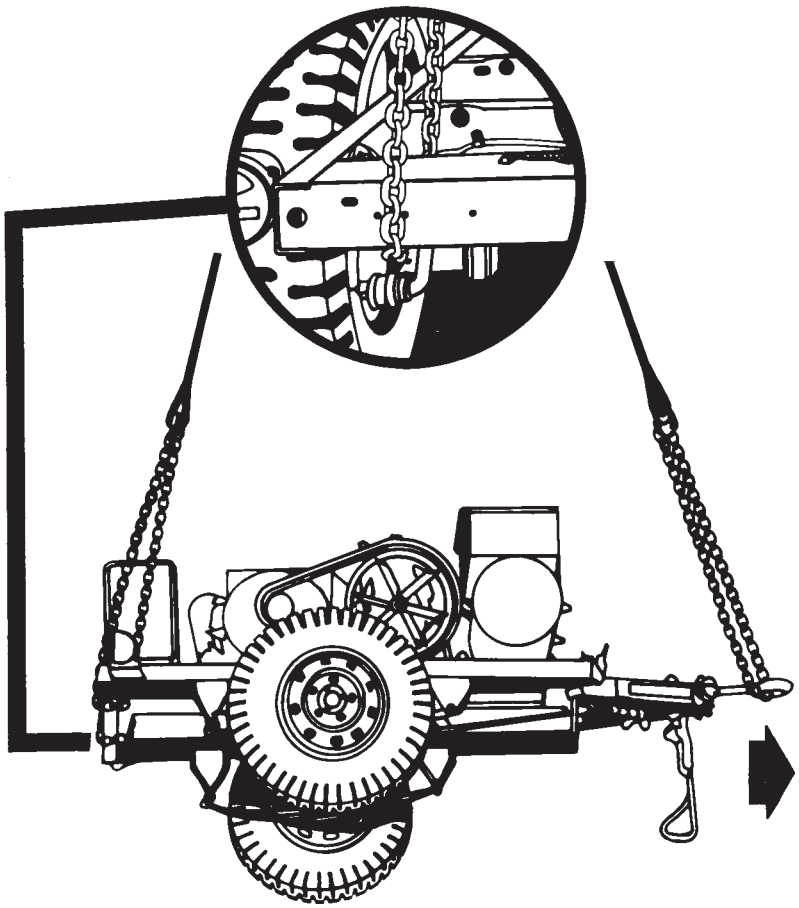

**RIGGING STEPS**

**1.** Position apex fitting on top of the compressor. Route outer sling legs 1 and 2 to the front of the trailer and inner sling legs 3 and 4 to the rear. Sling legs 1 and 3 must be on the left side of the load.

**2.** Loop the chain end of sling leg 1 through the lunette. Place the correct link from Table 16-7 in the grab hook. Repeat with sling leg 2 on the right side. Secure the excess chain with Type III nylon cord.

**3.** Loop the chain end of sling leg 3 around the rear frame member to the left of the fuel tank. Place the correct link from Table 16-7 in the grab hook. Repeat with sling leg 4 and the right rear corner of the trailer. Secure the excess chain with Type III nylon cord.

**4.** Cluster and tie or tape (breakaway technique) all sling legs together on top of the compressor to prevent entanglement during hookup and lift-off.

*Figure 16-7. Trailer-Mounted Compressor, Reciprocating*

## 16-9. Trailer-Mounted AN/MTC-10

**a. Applicability.** The following item in Table 16-8 is suitable for sling load by all **ARMY** helicopters with suitable lift capacity:

**Table 16-8. Trailer-Mounted AN/MTC-10**

| NOMENCLATURE | MAX WEIGHT (POUNDS) | SLING SET | LINK COUNT FRONT/REAR | RECOMMENDED AIRSPEED (KNOTS) |
|---|---|---|---|---|
| AN/MTC-10, Telephone Control Office Group on M416 Trailer | 1,800 | 10K | 3/3 | 70 |

**b. Materials.** The following materials are required to rig this load:

**(1)** Sling set (10,000-pound capacity).

**(2)** Tape, adhesive, pressure-sensitive, 2-inch wide roll.

**(3)** Cord, nylon, Type III, 550-pound breaking strength.

**(4)** Webbing, cotton, 1/4-inch, 80-pound breaking strength.

**c. Personnel.** Two persons can prepare and rig this load in 30 minutes.

**d. Procedures.** The following procedures apply to this load:

**(1) Preparation.** Prepare the load using the following steps:

**(a)** Remove the tarpaulin and all external items; stow in the bed of the trailer.

**(b)** Stow the accompanying load in the trailer bed and secure with Type III nylon cord.

**(c)** Tape all fittings on the trailer and tongue.

**(d)** Fold rear stand before hookup to helicopter.

**(2) Rigging.** Rig the load according to the steps in Figure 16-8.

**(3) Hookup.** The hookup team stands on top of the load. The static wand person discharges the static electricity with the static wand. The hookup person places the apex fitting onto the aircraft cargo hook. The hookup team then moves clear of the load but remains close to the load as the helicopter removes slack from the sling legs. When successful hookup is assured, the hookup team quickly exits the area underneath the helicopter to the designated rendezvous point.

**(4) Derigging.** Derigging is the reverse of the preparation and rigging procedures in steps d (1) and d (2).

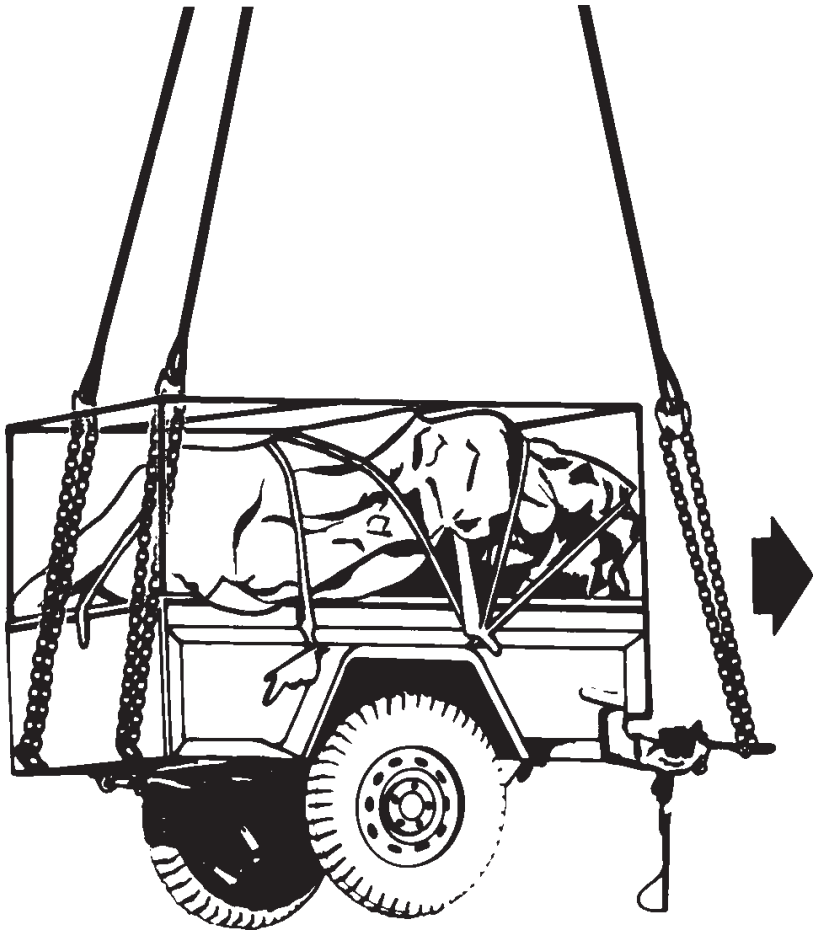

**RIGGING STEPS**

**1.** Position apex fitting on top of the trailer. Route outer sling legs 1 and 2 to the front of the trailer and inner sling legs 3 and 4 to the rear ensuring they are forward of the aft top frame. Sling legs 1 and 3 must be on the left side of the load.

**2.** Loop the chain end of sling leg 1 through the lunette. Place the correct link from Table 16-8 in the grab hook. Repeat with sling leg 2 on the right side.

**3.** Loop the chain end of sling leg 3 under the left rear corner of the trailer and around the left rear spring shackle. Place the correct link from Table 16-8 in the grab hook. Repeat with sling leg 4 and the right rear corner of the trailer.

**4.** Cluster and tie or tape (breakaway technique) all sling legs to the upper frame to prevent entanglement during hookup and lift-off.

*Figure 16-8. Trailer-Mounted AN/MTC-10*

## 16-10. Trailer-Mounted Tool Outfit

**a. Applicability.** The following item in Table 16-9 is suitable for sling load by all **ARMY** helicopters with suitable lift capacity:

**Table 16-9. Trailer-Mounted Tool Outfit**

| NOMENCLATURE | MAX WEIGHT (POUNDS) | SLING SET | LINK COUNT FRONT/REAR | RECOMMENDED AIRSPEED (KNOTS) |
|---|---|---|---|---|
| Trailer-Mounted Tool Outfit | 2,450 | 10K | 5/35 | 70 |

**b. Materials.** The following materials are required to rig this load:

**(1)** Sling set (10,000-pound capacity).

**(2)** Tape, adhesive, pressure-sensitive, 2-inch wide roll.

**(3)** Cord, nylon, Type III, 550-pound breaking strength.

**(4)** Webbing, cotton, 1/4-inch, 80-pound breaking strength.

**c. Personnel.** Two persons can prepare and rig this load in 15 minutes.

**d. Procedures.** The following procedures apply to this load:

**(1) Preparation.** Prepare the load using the following steps:

**(a)** Secure the covers and doors with tape or Type III nylon cord.

**(b)** Secure the intervehicular cable and safety chains to the trailer tongue with tape or Type III nylon cord.

**(c)** Engage the parking brake.

**(2) Rigging.** Rig the load according to the steps in Figure 16-9.

**(3) Hookup.** The hookup team stands on top of the load. The static wand person discharges the static electricity with the static wand. The hookup person places the apex fitting onto the aircraft cargo hook. The hookup team then moves clear of the load but remains close to the load as the helicopter removes slack from the sling legs. When successful hookup is assured, the hookup team quickly exits the area underneath the helicopter to the designated rendezvous point.

**(4) Derigging.** Derigging is the reverse of the preparation and rigging procedures in steps d (1) and d (2).

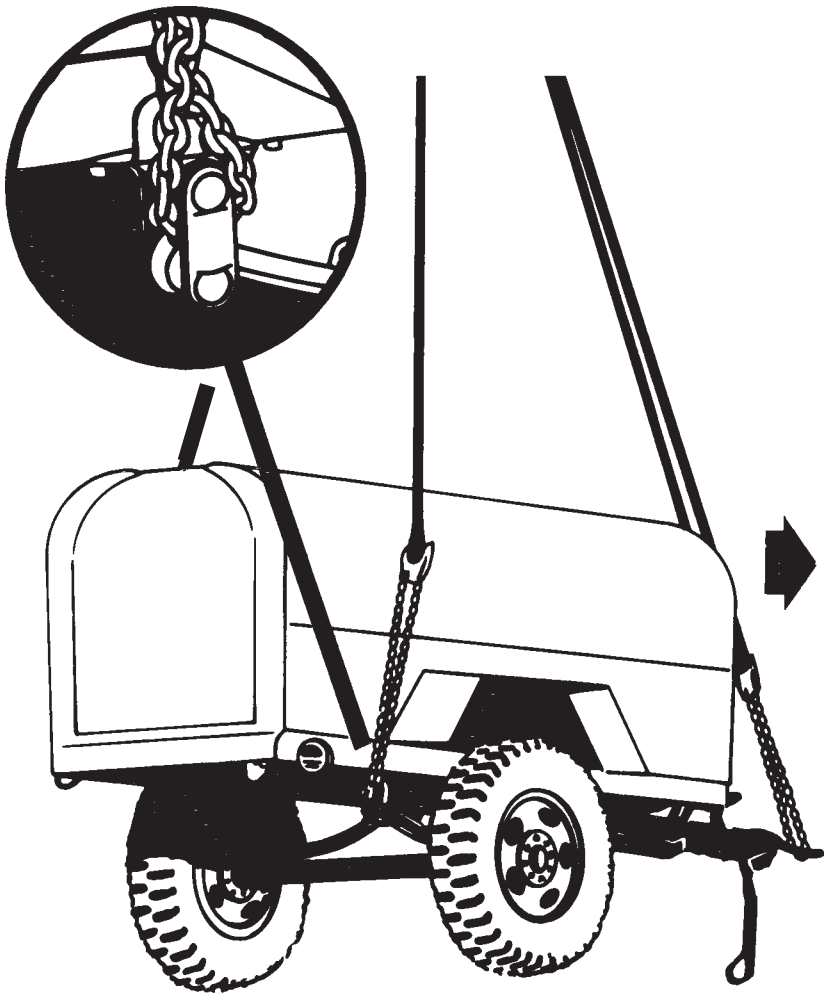

**RIGGING STEPS**

**1.** Position apex fitting on top of the tool outfit cover. Route outer sling legs 1 and 2 to the front of the trailer and inner sling legs 3 and 4 to the rear . Sling legs 1 and 3 must be on the left side of the load.

**2.** Loop the chain end of sling leg 1 through the lunette. Place the correct link from Table 16-9 in the grab hook. Repeat with sling leg 2 on the right side.

**3.** Loop the chain end of sling leg 3 under the left rear corner of the trailer and around the left rear spring shackle. Place the correct link from Table 16-9 in the grab hook. Repeat with sling leg 4 and the right rear corner of the trailer. Secure the excess chain with Type III nylon cord.

**4.** Cluster and tie or tape (breakaway technique) all sling legs together on top of the tool outfit to prevent entanglement during hookup and lift-off.

*Figure 16-9. Trailer-Mounted Tool Outfit*

## 16-11. Trailer-Mounted, Lube, Service Unit

**a. Applicability.** The following item in Table 16-10 is suitable for sling load by all **ARMY** helicopters with suitable lift capacity:

**Table 16-10. Trailer-Mounted, Lube, Service Unit**

| NOMENCLATURE | MAX WEIGHT (POUNDS) | SLING SET | LINK COUNT FRONT/REAR | RECOMMENDED AIRSPEED (KNOTS) |
|---|---|---|---|---|
| Semitrailer, Lowbed, Wrecker, 12-ton, 4-wheel | 17,500 | 25K | 55/3 | 80 |

**b. Materials.** The following materials are required to rig this load:

**(1)** Sling set (10,000-pound capacity).

**(2)** Tape, adhesive, pressure-sensitive, 2-inch wide roll.

**(3)** Cord, nylon, Type III, 550-pound breaking strength.

**(4)** Webbing, cotton, 1/4-inch, 80-pound breaking strength.

**(5)** Tie-down, cargo, CGU-1B (2 each).

**c. Personnel.** Two persons can prepare and rig this load in 20 minutes.

**d. Procedures.** The following procedures apply to this load:

**(1) Preparation.** Prepare the load using the following steps:

**(a)** Ensure the batteries and loose equipment under the cover are secure.

**(b)** Secure the doors with Type III nylon cord.

**(c)** Secure the box to the frame with the CGU-1/Bs.

**(d)** Secure the brake hoses and safety chains to the tongue of the trailer with Type III nylon cord.

**(e)** Engage the parking brake.

**(2) Rigging.** Rig the load according to the steps in Figure 16-10.

**(3) Hookup.** The hookup team stands on top of the load. The static wand person discharges the static electricity with the static wand. The hookup person places the apex fitting onto the aircraft cargo hook. The hookup team then moves clear of the load but remains close to the load as the helicopter removes slack from the sling legs. When successful hookup is assured, the hookup team quickly exits the area underneath the helicopter to the designated rendezvous point.

**(4) Derigging.** Derigging is the reverse of the preparation and rigging procedures in steps d (1) and d (2).

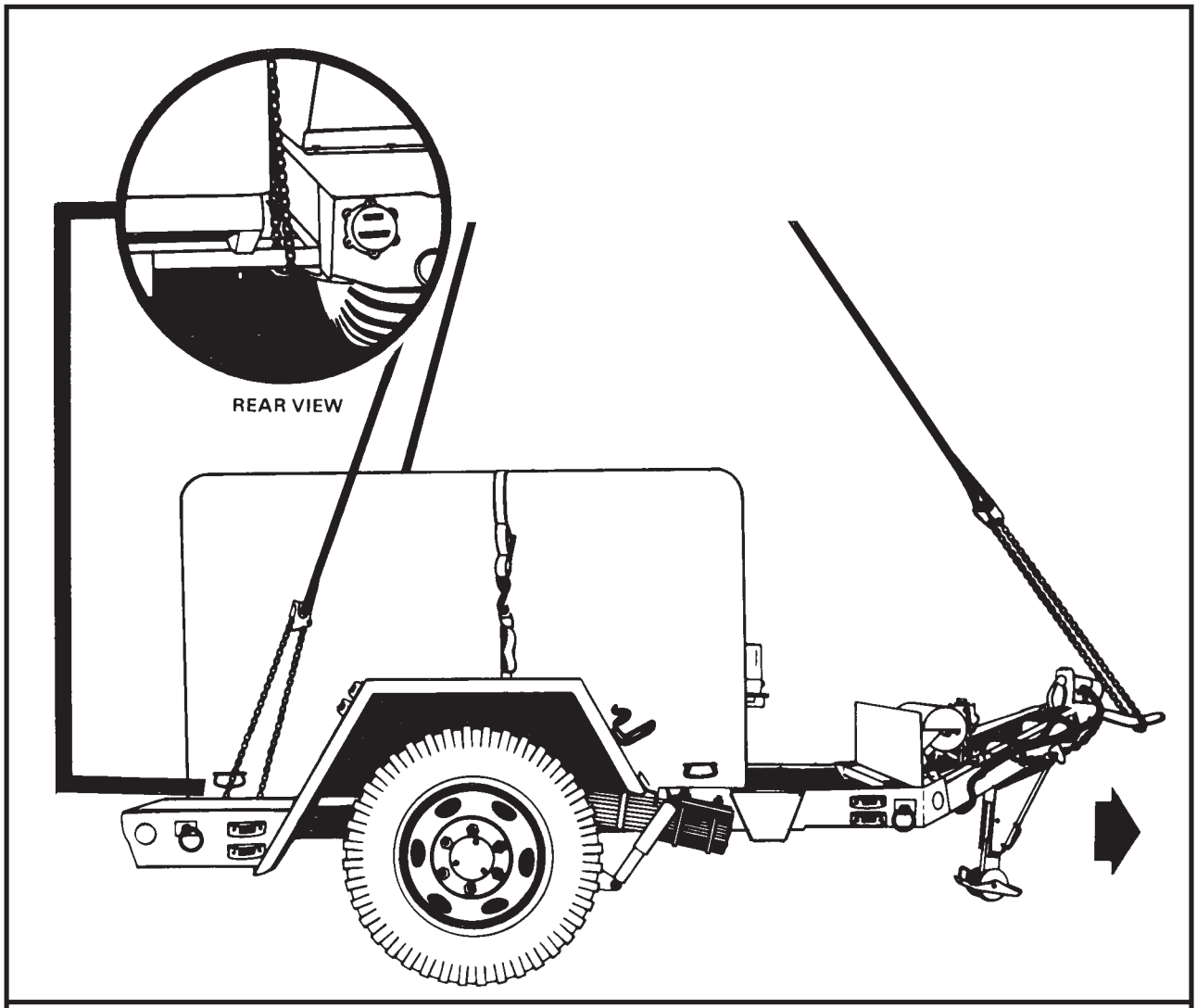


**RIGGING STEPS**

**1.** Position apex fitting on top of the lube service unit. Route outer sling legs 1 and 2 to the front of the trailer and inner sling legs 3 and 4 to the rear . Sling legs 1 and 3 must be on the left side of the load.

**2.** Loop the chain end of sling leg 1 through the lunette. Place the correct link from Table 16-10 in the grab hook. Repeat with sling leg 2 on the right side.

**3.** Loop the chain end of sling leg 3 around the frame member between the left rear side of the service unit and work platform. Place the correct link from Table 16-10 in the grab hook. Repeat with sling leg 4 and the right rear corner of the trailer. Secure the excess chain with Type III nylon cord.

**4.** Cluster and tie or tape (breakaway technique) all sling legs together on top of the lube service unit to prevent entanglement during hookup and lift-off.

*Figure 16-10. Trailer-Mounted Lube Service Unit*

## 16-12. Trailer, Bolster, M796

**a. Applicability.** The following item in Table 16-11 is suitable for sling load by all **ARMY** helicopters with suitable lift capacity:

**Table 16-11. M796 Trailer Bolster**

| NOMENCLATURE | MAX WEIGHT (POUNDS) | SLING SET | LINK COUNT FRONT/REAR | RECOMMENDED AIRSPEED (KNOTS) |
|---|---|---|---|---|
| Trailer, Bolster, 4-ton, 4-Wheel, M796 | 6,340 | 10K | 100/8 | 110 |

**b. Materials.** The following materials are required to rig this load:

**(1)** Sling set (10,000-pound capacity).

**(2)** Tape, adhesive, pressure-sensitive, 2-inch wide roll.

**(3)** Cord, nylon, Type III, 550-pound breaking strength.

**(4)** Webbing, cotton, 1/4-inch, 80-pound breaking strength.

**c. Personnel.** Two persons can prepare and rig this load in 15 minutes.

**d. Procedures.** The following procedures apply to this load:

**(1) Preparation.** Prepare the load using the following steps:

**(a)** Secure the front leg in the down position.

**(b)** Secure the brake hoses and safety chains to the tongue of the trailer with Type III nylon cord.

**(c)** Engage the parking brake.

**(2) Rigging.** Rig the load according to the steps in Figure 16-11.

**(3) Hookup.** The hookup team stands on top of the trailer. The static wand person discharges the static electricity with the static wand. The hookup person places the apex fitting onto the aircraft cargo hook. The hookup team then moves clear of the load but remains close to the load as the helicopter removes slack from the sling legs. When successful hookup is assured, the hookup team quickly exits the area underneath the helicopter to the designated rendezvous point.

**(4) Derigging.** Derigging is the reverse of the preparation and rigging procedures in steps d (1) and d (2).

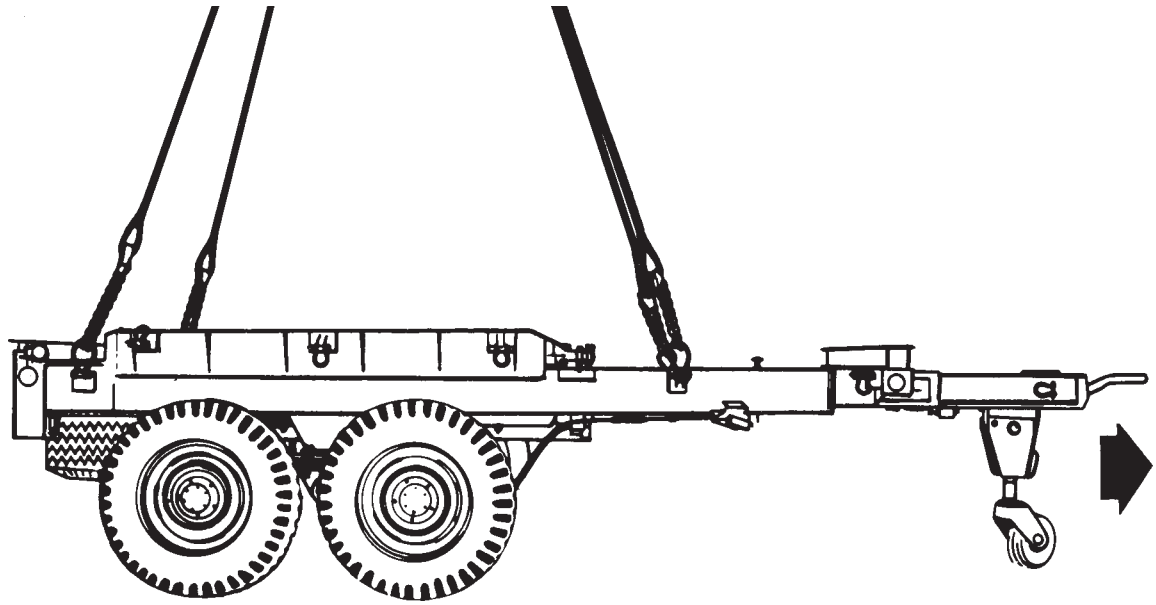

**RIGGING STEPS**

**1.** Position apex fitting on top of the trailer. Route outer sling legs 1 and 2 to the front of the trailer and inner sling legs 3 and 4 to the rear . Sling legs 1 and 3 must be on the left side of the load.

**2.** Loop the chain end of sling leg 1 through the left front lift provision located aft of the left hand brake. Place the correct link from Table 16-11 in the grab hook. Repeat with sling leg 2 on the right side. Secure the excess chain with Type III nylon cord.

**3.** Loop the chain end of sling leg 3 through the left rear lift provision located aft of the left wheel. Place the correct link from Table 16-11 in the grab hook. Repeat with sling leg 4 and the right rear of the trailer.

**4.** Cluster and tie or tape (breakaway technique) all sling legs together on top of the trailer to prevent entanglement during hookup and lift-off.

*Figure 16-11. M796 Trailer Bolster*

## 16-13. M149 Series Water Trailers

**a. Applicability.** The following items in Table 16-12 are suitable for sling load by all **ARMY** helicopters with suitable lift capacity:

**Table 16-12. M149 Series Water Trailers**

| NOMENCLATURE | MAX WEIGHT (POUNDS) | SLING SET | LINK COUNT FRONT/REAR | RECOMMENDED AIRSPEED (KNOTS) |
|---|---|---|---|---|
| Trailer, Water, M149 | 6,060 | 10K | 75/90 | 80 |
| Trailer, Water, M149A1 | 6,060 | 10K | 75/90 | 80 |
| Trailer, Water, M149A2 | 6,320 | 10K | 75/90 | 80 |

**WARNING**

**THE M149, M149A1, AND M149A2 WATER TRAILERS, WITHOUT THE MODIFIED CLEVIS-TYPE LIFT PROVISIONS, ARE NOT CURRENTLY CERTIFIED FOR SLING LOADING DUE TO INADEQUATE LIFT PROVISION STRENGTH WHEN THE TRAILER IS LOADED.**

**b. Materials.** The following materials are required to rig this load:

**(1)** Sling set (10,000-pound capacity).

**(2)** Tape, adhesive, pressure-sensitive, 2-inch wide roll.

**(3)** Cord, nylon, Type III, 550-pound breaking strength.

**(4)** Webbing, cotton, 1/4-inch, 80-pound breaking strength.

**c. Personnel.** Two persons can prepare and rig this load in 10 minutes.

**d. Procedures.** The following procedures apply to this load:

**(1) Preparation.** Prepare the load using the following steps:

**(a)** Secure the brake hoses and safety chains to the tongue of the trailer with Type III nylon cord.

**(b)** Place the support leg and wheel in the DOWN position.

**(c)** Tape the top edge of the aft end of the water tank to prevent the sling legs from chafing on the top of the tank.

**(d)** Engage both hand brakes.

**(e)** Ensure the fill port is securely closed. Tape if necessary.

**(2) Rigging.** Rig the load according to the steps in Figure 16-12.

**(3) Hookup.** The hookup team stands on each wheel fender. The static wand person discharges the static electricity with the static wand. The hookup person places the apex fitting onto the aircraft cargo hook. The hookup team then moves clear of the load but remains close to the load as the helicopter removes slack from the sling legs. When successful hookup is assured, the hookup team quickly exits the area underneath the helicopter to the designated rendezvous point.

**(4) Derigging.** Derigging is the reverse of the preparation and rigging procedures in steps d (1) and d (2).

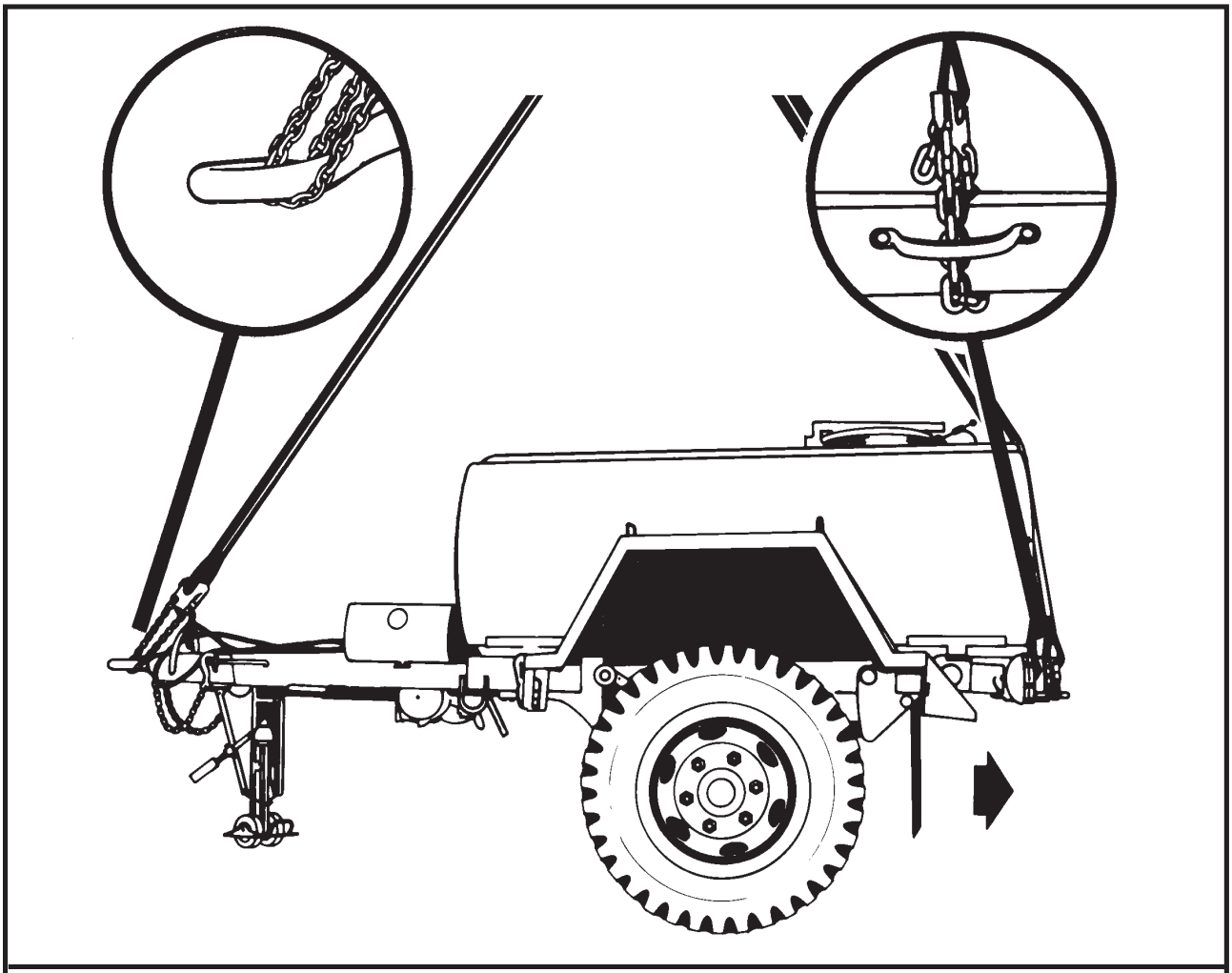

**RIGGING STEPS**

**1.** Position apex fitting on top of the tank. Route outer sling legs 1 and 2 to the front of the trailer and inner sling legs 3 and 4 to the rear . Sling legs 1 and 3 must be on the left side of the load.

**2.** Loop the chain end of sling leg 1 through the lunette. Place the correct link from Table 16-12 in the grab hook. Repeat with sling leg 2 on the right side. Secure the excess chain with Type III nylon cord.

**3.** Using the rear lift provisions as a guide to keep the chains in place, route the chain end of sling leg 3 down between the tank and the crossmember, under the rear crossmember, and back up through the lift provision. Place the correct link from Table 16-12 in the grab hook. Repeat with sling leg 4 and the right rear of the trailer. Secure the excess chain with Type III nylon cord.

**4.** Cluster and tie or tape (breakaway technique) all sling legs together on top of the water tank to prevent entanglement during hookup and lift-off.

*Figure 16-12. M149 Series Water Trailers*

# CHAPTER 17

# SUITABLE SINGLE-POINT RIGGING PROCEDURES FOR HOWITZERS

## 17-1. Introduction

This chapter contains rigging procedures for single-point lift of howitzers that are suitable for sling load. Each rigging procedure is found in a paragraph that includes a description of the load, materials required for rigging, and steps to complete the procedure. An applicability paragraph is also a part of each paragraph and identifies the suitable loads. The suitable single-point rigging procedures for howitzers are in this section. Paragraph 17-2 gives detailed instructions for rigging the load.

**NOTE: Reach Pendants may be used on all single point loads. A static discharge person is not required when using a Reach Pendant.**

## 17-2. M114A1 155-MM Howitzer with or without Accompanying Load

**a. Applicability.** The following items in Table 17-1 are suitable for sling load by all **ARMY** helicopters with suitable lift capacity:

**Table 17-1. M114A1 155-MM Howitzer with or without Accompanying Load**

| NOMENCLATURE | MAX WEIGHT (POUNDS) | SLING SET | LINK COUNT FRONT/REAR | RECOMMENDED AIRSPEED (KNOTS) |
|---|---|---|---|---|
| Howitzer, Towed, 155-MM, M114A1 | 12,660 | 25K | 53/3 | 90 |
| Howitzer, Towed, 155-MM, M114A1 with Accompanying Load | 15,160 | 25K | 53/3 | 85 |

**b. Materials.** The following materials are required to rig this load:

**(1)** Sling set (25,000-pound capacity).

**(2)** Tape, adhesive, pressure-sensitive, 2-inch wide roll.

**(3)** Cord, nylon, Type III, 550-pound breaking strength.

**(4)** Webbing, cotton, 1/4-inch, 80-pound breaking strength.

**(5)** Tie-down strap, cargo, CGU-1/B (as required).

**(6)** Clevis assembly, large, MS 70087-3.

**(7)** Bag, cargo, A-22 or cargo net.

**(8)** Sling leg assembly from a 10,000 or 25,000-pound capacity sling set.

**c. Personnel.** Two persons can prepare and rig this load in 35 minutes.

**d. Procedures.** The following procedures apply to this load:

**(1) Preparation.** Prepare the load using the following steps:

**(a)** Stow all howitzer equipment, including sights, in the proper place except for the spade key.

**(b)** Stow the spade key in the section chest. Secure all equipment with tape or Type III nylon cord.

**(c)** Secure the section chest on the rear of the trails by routing the tie-down strap through the handles of the chest and both trail lifting handles. Secure the excess strap.

**(d)** Secure the spades to the brackets with Type III nylon cord. Secure all cables and hoses to the sides of the trails with tape or Type III nylon cord.

**(e)** Secure the trail latching handle in the closed position with Type III nylon cord and insert the trail locking pin.

**(f)** Engage one hand brake.

**(g)** Place the left ballistic shield in the raised position.

**(h)** Remove or secure all gun covers.

**(2) Rigging.** Rig the load according to the steps in Figure 17-1.

**(3) Hookup.** The hookup team stands on the trails near the breech. The static wand person discharges the static electricity with the static wand. The hookup person places the apex fitting onto the aircraft cargo hook. The hookup team then moves clear of the load but remains close to the load as the helicopter removes slack from the sling legs. When successful hookup is assured, the hookup team quickly exits the area underneath the helicopter to the designated rendezvous point.

**(4) Derigging.** Derigging is the reverse of the preparation and rigging procedures in steps d (1) and d (2).

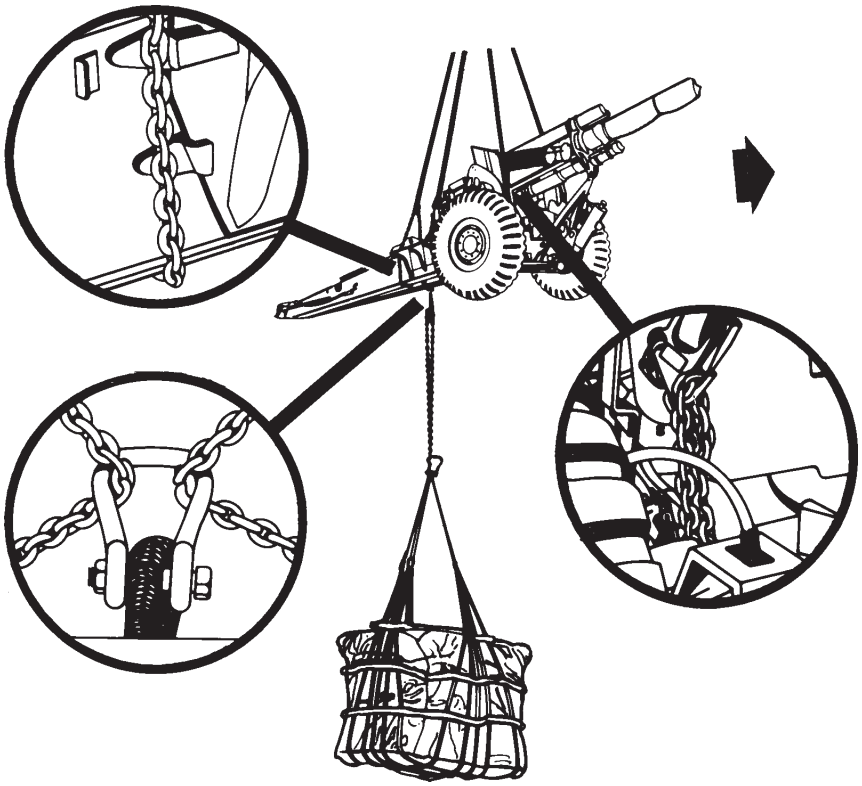

**RIGGING STEPS**

**1.** Position apex fitting on top of the breech. Route outer sling legs 1 and 2 to the barrel and inner sling legs 3 and 4 to the trails. Sling legs 1 and 3 must be on the left side of the load. Position the large clevis on the ground between the trails.

**2.** Loop the chain end of sling leg 1 through the left front lifting bracket inboard of the left wheel. Place the correct link from Table 17-1 in the grab hook. Repeat with sling leg 2 and the right front lift provision. Secure the excess chain with Type III nylon cord.

**3.** Pull sling legs 1 and 2 up until the chains are tight and tie or tape (breakaway technique) the grab hooks to the ballistic shields.

**4.** Loop the chain end of sling leg 3 down through the spade key bracket on the left trail, under the trail, and up through the large clevis. Place the correct link from Table 17-1 in the grab hook.

**5.** Loop the chain end of sling leg 4 down the outside of the right trail behind the rear edge of the spade, under the trail, and up through the large clevis. Place the correct link from Table 17-1 in the grab hook.

**6.** Pull the grab hooks on sling legs 3 and 4 tight while keeping the large clevis centered between the trails.

**7.** Remove the bolt from the clevis between the trails, place the eye of the additional sling leg assembly in the clevis and replace the bolt. The sling leg eye must be around the bolt.

**8.** Route the sling leg under one trail and to the A-22 bag. Loop the chain end through the suspension clevis of the A-22 cargo bag and insert link 3 in the grab hook. If a cargo net is used, the apex fitting may be hooked directly to the large clevis.

**9.** Cluster and tie or tape (breakaway technique) all sling legs together on top of the breech to prevent entanglement during hookup and lift-off.

***Figure 17-1. M114A1 155-MM Howitzer with or without Accompanying Load***

THIS PAGE INTENTIONALLY LEFT BLANK

# CHAPTER 18

# SUITABLE SINGLE-POINT RIGGING PROCEDURES FOR ENGINEER EQUIPMENT

## 18-1. Introduction

This chapter contains rigging procedures for single-point lift of engineer equipment that is suitable for sling load. Each rigging procedure is found in a paragraph that includes a description of the load, materials required for rigging, and steps to complete the procedure. An applicability paragraph is also a part of each paragraph and identifies the suitable loads. The suitable single-point rigging procedures for engineer equipment is in this section. Paragraphs 18-2 through 18-12 give detailed instructions for rigging loads.

**NOTE: Reach Pendants may be used on all single point loads. A static discharge person is not required when using a Reach Pendant.**

## 18-2. MRS-100 Wheeled Industrial Tractor

**a. Applicability.** The following item in Table 18-1 is suitable for sling load by all **ARMY** helicopters with suitable lift capacity:

**Table 18-1. MRS-100 Wheeled Industrial Tractor**

| NOMENCLATURE | MAX WEIGHT (POUNDS) | SLING SET | LINK COUNT FRONT/REAR | RECOMMENDED AIRSPEED (KNOTS) |
|---|---|---|---|---|
| Tractor, Wheeled, Industrial, MRS-100 | 21,100 | 25K | 53/3 | 80 |

**b. Materials.** The following materials are required to rig this load:

**(1)** Sling set (25,000-pound capacity).

**(2)** Tape, adhesive, pressure-sensitive, 2-inch wide roll.

**(3)** Cord, nylon, Type III, 550-pound breaking strength.

**(4)** Webbing, cotton, 1/4-inch, 80-pound breaking strength.

**c. Personnel.** One person can prepare and rig this load in 15 minutes.

**d. Procedures.** The following procedures apply to this load:

**(1) Preparation.** Prepare the load using the following steps:

**(a)** Sectionalize the tractor from the scraper according to the operator's manual.

**(b)** Secure the hydraulic lift cylinder in the carrying bracket.

**(c)** Secure all caps, lids, and hatches.

**(d)** Place the transmission in neutral and set the hand brake.

**(e)** Lock the blade in the locked position.

**(2) Rigging.** Rig the load according to the steps in Figure 18-1.

**(3) Hookup.** The hookup team stands on the driver's seat. The static wand person discharges the static electricity with the static wand. The hookup person places the apex fitting onto the aircraft cargo hook. The hookup team then moves clear of the load but remains close to the load as the helicopter removes slack from the sling legs. When successful hookup is assured, the hookup team quickly exits the area underneath the helicopter to the designated rendezvous point.

**(4) Derigging.** Derigging is the reverse of the preparation and rigging procedures in steps d (1) and d (2).

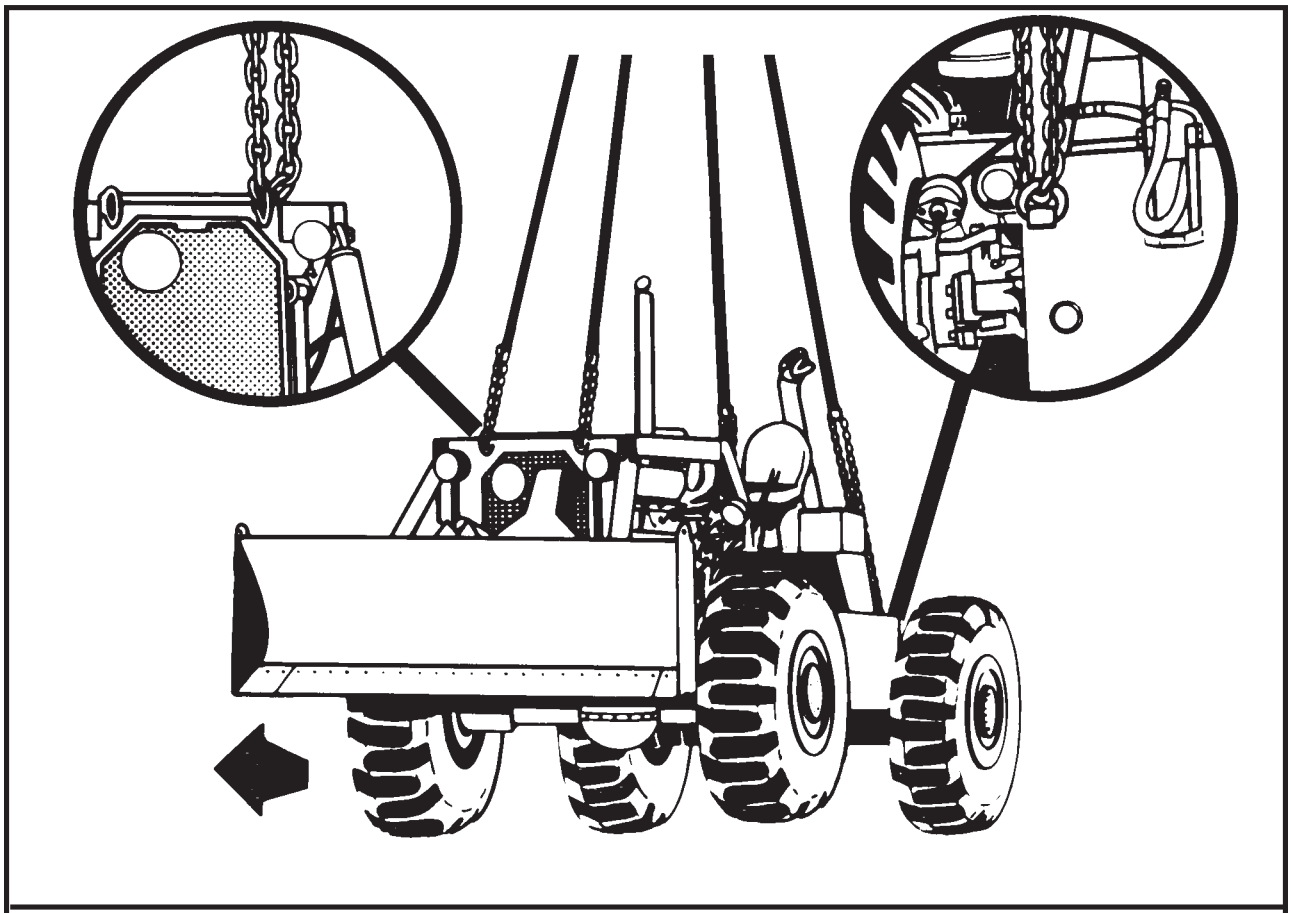

**RIGGING STEPS**

**1.** Position apex fitting on the driver's seat. Route outer sling legs 1 and 2 to the front of the tractor and inner sling legs 3 and 4 to the rear. Sling legs 1 and 3 must be on the left side of the load.

**2.** Loop the chain end of sling leg 1 through the left front lift provision by the radiator. Place the correct link from Table 18-1 in the grab hook. Repeat with sling leg 2 and the right front lift provision. Secure the excess chain with Type III nylon cord.

**3.** Loop the chain end of sling leg 3 through the left rear lift provision located near the left brake light. Place the correct link from Table 18-1 in the grab hook. Repeat with sling leg 4 and the right rear lift provision.

**4.** Cluster and tie or tape (breakaway technique) all sling legs together on top of the tractor to prevent entanglement during hookup and lift-off.

*Figure 18-1. MRS-100 Wheeled Industrial Tractor*

## 18-3. M5 8-Foot Aggregate Spreader

**a. Applicability.** The following item in Table 18-2 is suitable for sling load by all **ARMY** helicopters with suitable lift capacity:

**Table 18-2. M5 8-Foot Aggregate Spreader**

| NOMENCLATURE | MAX WEIGHT (POUNDS) | SLING SET | LINK COUNT FRONT/REAR | RECOMMENDED AIRSPEED (KNOTS) |
|---|---|---|---|---|
| Spreader, Aggregate, Towed, 8-foot, M5 | 2,290 | 10K | 3/3 | 90 |

**b. Materials.** The following materials are required to rig this load:

**(1)** Sling set (10,000-pound capacity).

**(2)** Tape, adhesive, pressure-sensitive, 2-inch wide roll.

**(3)** Cord, nylon, Type III, 550-pound breaking strength.

**(4)** Webbing, cotton, 1/4-inch, 80-pound breaking strength.

**c. Personnel.** One person can prepare and rig this load in 15 minutes.

**d. Procedures.** The following procedures apply to this load:

**(1) Preparation.** Prepare the load using the following steps:

**(a)** Remove the operator's platform and block off plates.

**(b)** Stow and secure the platform and plates in the spreader.

**(2) Rigging.** Rig the load according to the steps in Figure 18-2.

**(3) Hookup.** The hookup team stands on top of the spreader. The static wand person discharges the static electricity with the static wand. The hookup person places the apex fitting onto the aircraft cargo hook. The hookup team then moves clear of the load but remains close to the load as the helicopter removes slack from the sling legs. When successful hookup is assured, the hookup team quickly exits the area underneath the helicopter to the designated rendezvous point.

**(4) Derigging.** Derigging is the reverse of the preparation and rigging procedures in steps d (1) and d (2).

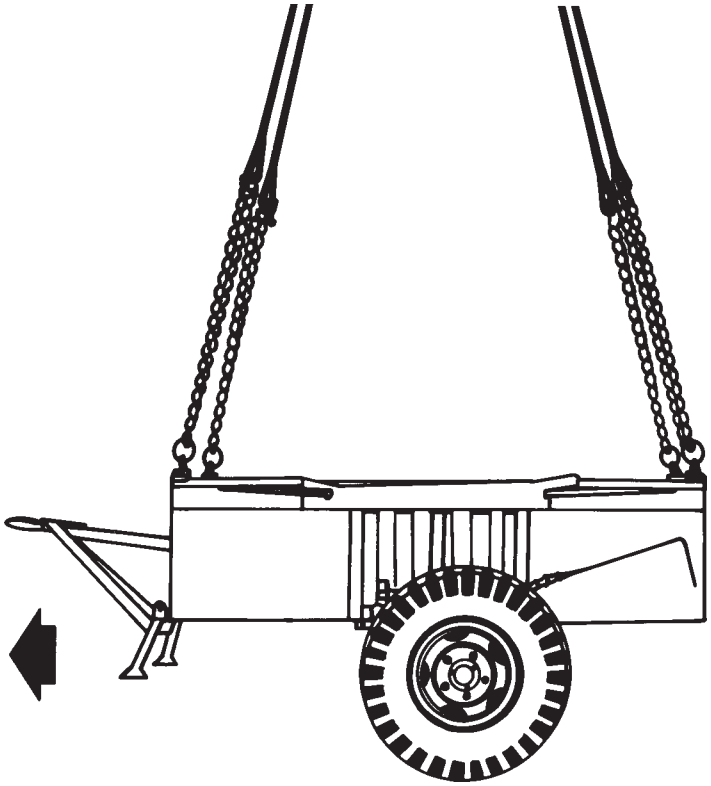

**RIGGING STEPS**

**1.** Position apex fitting on top of the spreader. Route outer sling legs 1 and 2 to the front (tongue end) of the spreader and inner sling legs 3 and 4 to the rear. Sling legs 1 and 3 must be on the left side of the load.

**2.** Loop the chain end of sling leg 1 through the left front lifting eye located on the front left corner of the spreader. Place the correct link from Table 18-2 in the grab hook. Repeat with sling leg 2 and the right front lift provision.

**3.** Loop the chain end of sling leg 3 through the left rear lifting eye located on the left rear corner of the spreader. Place the correct link from Table 18-2 in the grab hook. Repeat with sling leg 4 and the right rear lift provision.

**4.** Cluster and tie or tape (breakaway technique) all sling legs together on top of the spreader to prevent entanglement during hookup and lift-off.

*Figure 18-2. M5 8-Foot Aggregate Spreader*

## 18-4. Roller, Towed, Vibrating, 1-Drum, 5-Ton, VR55TM

**a. Applicability.** The following item in Table 18-3 is suitable for sling load by all **ARMY** helicopters with suitable lift capacity:

**Table 18-3. Roller, Towed, Vibrating, 1-Drum, 5-Ton, VR55TM**

| NOMENCLATURE | MAX WEIGHT (POUNDS) | SLING SET | LINK COUNT FRONT/REAR | RECOMMENDED AIRSPEED (KNOTS) |
|---|---|---|---|---|
| Roller, Towed, Vibrating, Essick Model, VR55TM, One Drum, 5-ton | 3,450 | 10K | 20/90 | 90 |

**b. Materials.** The following materials are required to rig this load:

**(1)** Sling set (10,000-pound capacity).

**(2)** Tape, adhesive, pressure-sensitive, 2-inch wide roll.

**(3)** Cord, nylon, Type III, 550-pound breaking strength.

**(4)** Webbing, cotton, 1/4-inch, 80-pound breaking strength.

**c. Personnel.** Two persons can prepare and rig this load in 15 minutes.

**d. Procedures.** The following procedures apply to this load:

**(1) Preparation.** Prepare the load using the following steps:

**(a)** Secure the front and rear support legs in the DOWN position with Type III nylon cord.

**(b)** Secure the battery box cover and engine top cover with Type III nylon cord.

**(2) Rigging.** Rig the load according to the steps in Figure 18-3.

**(3) Hookup.** The hookup team stands on top of the roller. The static wand person discharges the static electricity with the static wand. The hookup person places the apex fitting onto the aircraft cargo hook. The hookup team then moves clear of the load but remains close to the load as the helicopter removes slack from the sling legs. When successful hookup is assured, the hookup team quickly exits the area underneath the helicopter to the designated rendezvous point.

**(4) Derigging.** Derigging is the reverse of the preparation and rigging procedures in steps d (1) and d (2).

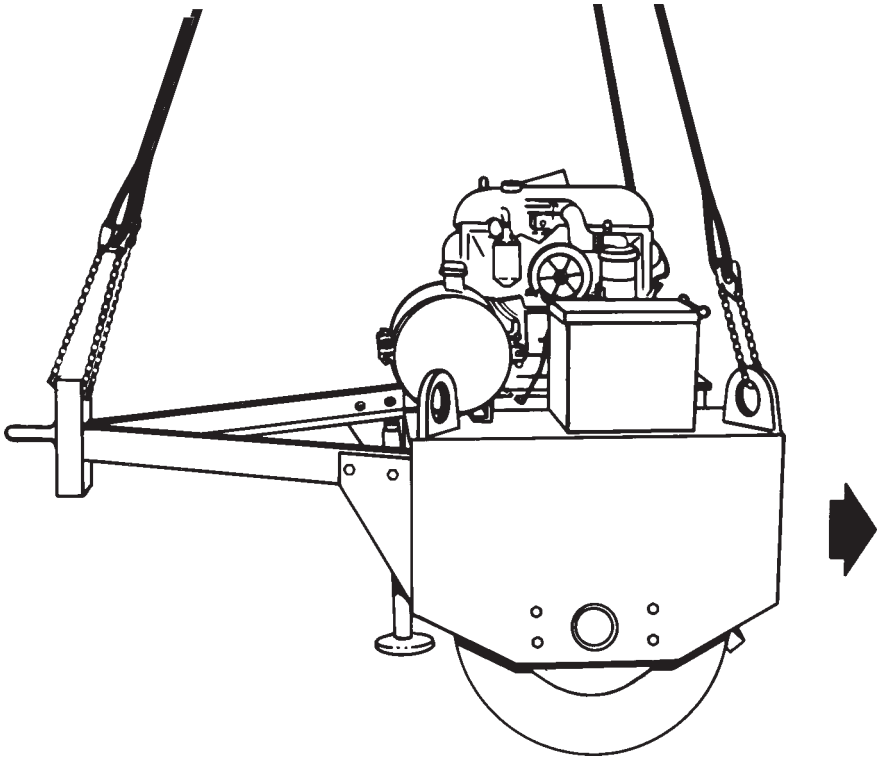

**RIGGING STEPS**

**1.** Position apex fitting on top of the roller. Route outer sling legs 1 and 2 to the front (pintle end) of the roller and inner sling legs 3 and 4 to the rear. Sling legs 1 and 3 must be on the left side of the load.

**2.** Loop the chain end of sling legs 1 and 2 through the front lifting point on top of the pintle eyelet. Place the correct link from Table 18-3 in the grab hook. Secure the excess chain with Type III nylon cord.

**3.** Loop the chain end of sling leg 3 through the left rear lift provision located on the left rear corner of the roller. Place the correct link from Table 18-3 in the grab hook. Repeat with sling leg 4 and the right rear lift provision. Secure the excess chain with Type III nylon cord.

**4.** Cluster and tie or tape (breakaway technique) all sling legs together on top of the roller to prevent entanglement during hookup and lift-off.

***Figure 18-3. Roller, Towed, Vibrating, 1-Drum, 5-Ton, VR55TM***

## 18-5. Roller, Road, Towed, Wheeled, 13-Tire, 9-Ton

**a. Applicability.** The following item in Table 18-4 is suitable for sling load by all **ARMY** helicopters with suitable lift capacity:

**Table 18-4. Roller, Road, Towed, Wheeled, 13-Tire, 9-Ton**

| NOMENCLATURE | MAX WEIGHT (POUNDS) | SLING SET | LINK COUNT FRONT/REAR | RECOMMENDED AIRSPEED (KNOTS) |
|---|---|---|---|---|
| Roller, Road, Towed, Wheeled, 13-Tire, 9-Ton, 67B-MIL | 3,300 | 10K | 3/3 | 90 |

**b. Materials.** The following materials are required to rig this load:

**(1)** Sling set (10,000-pound capacity).

**(2)** Tape, adhesive, pressure-sensitive, 2-inch wide roll.

**(3)** Cord, nylon, Type III, 550-pound breaking strength.

**(4)** Webbing, cotton, 1/4-inch, 80-pound breaking strength.

**(5)** Tie-down, cargo, CGU-1/B.

**(6)** Chock blocks (2 each).

**c. Personnel.** Two persons can prepare and rig this load in 10 minutes.

**d. Procedures.** The following procedures apply to this load:

**(1) Preparation.** Prepare the load using the following steps:

**(a)** Secure the drain plugs with tape.

**(b)** Raise the tongue and secure it in place with the CGU-1/B cargo tie-down strap.

**(c)** Place the chock blocks by each set of rollers.

**(2) Rigging.** Rig the load according to the steps in Figure 18-4.

**(3) Hookup.** The hookup team stands on top of the roller. The static wand person discharges the static electricity with the static wand. The hookup person places the apex fitting onto the aircraft cargo hook. The hookup team then moves clear of the load but remains close to the load as the helicopter removes slack from the sling legs. When successful hookup is assured, the hookup team quickly exits the area underneath the helicopter to the designated rendezvous point.

**(4) Derigging.** Derigging is the reverse of the preparation and rigging procedures in steps d (1) and d (2).

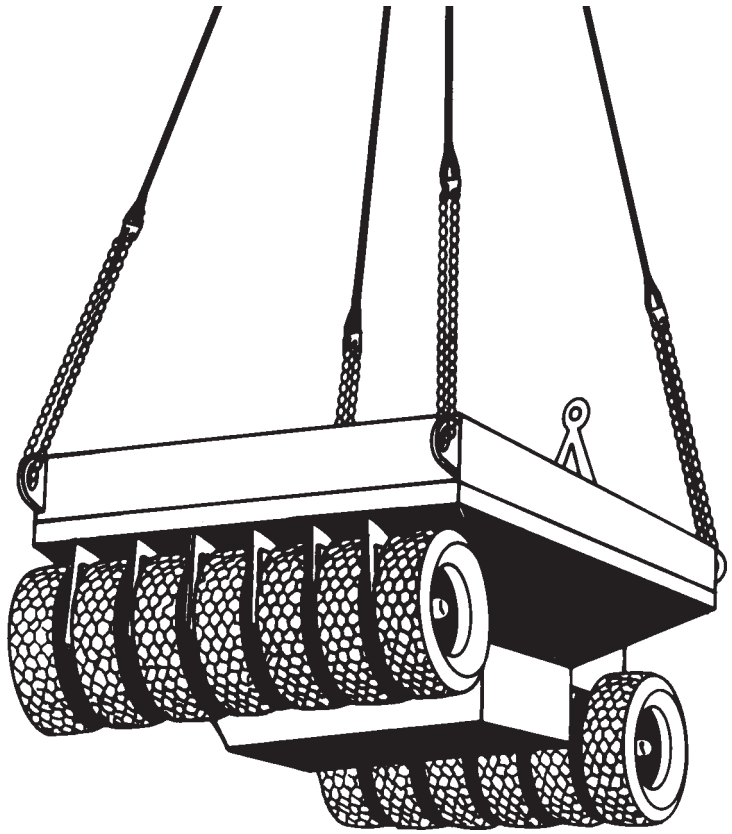

**RIGGING STEPS**

**1.** Position apex fitting on top of the roller. Route outer sling legs 1 and 2 to the front of the roller and inner sling legs 3 and 4 to the rear. Sling legs 1 and 3 must be on the left side of the load.

**2.** Loop the chain end of sling leg 1 through the left front lift provision located on the front left corner of the roller. Place the correct link from Table 18-4 in the grab hook. Repeat with sling leg 2 and the right front lift provision.

**3.** Loop the chain end of sling leg 3 through the left rear lift provision located on the left rear corner of the roller. Place the correct link from Table 18-4 in the grab hook. Repeat with sling leg 4 and the right rear lift provision.

**4.** Cluster and tie or tape (breakaway technique) all sling legs together on top of the roller to prevent entanglement during hookup and lift-off.

*Figure 18-4. Roller, Road, Towed, Wheeled, 13-Tire, 9-Ton*

## 18-6. Tar Kettles

**a. Applicability.** The following items in Table 18-5 are suitable for sling load by all **ARMY** helicopters with suitable lift capacity:

**Table 18-5. Tar Kettles**

| NOMENCLATURE | MAX WEIGHT (POUNDS) | SLING SET | LINK COUNT FRONT/REAR | RECOMMENDED AIRSPEED (KNOTS) |
|---|---|---|---|---|
| Kettle, Heating, Bitumen, 165-gallon | 1,750 | 10K | 5/20 | 70 |
| Kettle, Bitumen, Trailer-Mounted, 7ZPSAP | 1,900 | 10K | 5/20 | 70 |

**b. Materials.** The following materials are required to rig this load:

**(1)** Sling set (10,000-pound capacity).

**(2)** Tape, adhesive, pressure-sensitive, 2-inch wide roll.

**(3)** Cord, nylon, Type III, 550-pound breaking strength.

**(4)** Webbing, cotton, 1/4-inch, 80-pound breaking strength.

**c. Personnel.** Two persons can prepare and rig this load in 10 minutes.

**d. Procedures.** The following procedures apply to this load:

**(1) Preparation.** Prepare the load using the following steps:

**(a)** Secure the trailer front support leg in the DOWN position. Secure all safety chains, cables, and hoses with tape or Type III nylon cord.

**(b)** Secure all loose covers with Type III nylon cord.

**(c)** Engage the parking brake.

**(2) Rigging.** Rig the load according to the steps in Figure 18-5.

**(3) Hookup.** The hookup team stands on the frame alongside the kettle. The static wand person discharges the static electricity with the static wand. The hookup person places the apex fitting onto the aircraft cargo hook. The hookup team then moves clear of the load but remains close to the load as the helicopter removes slack from the sling legs. When successful hookup is assured, the hookup team quickly exits the area underneath the helicopter to the designated rendezvous point.

**(4) Derigging.** Derigging is the reverse of the preparation and rigging procedures in steps d (1) and d (2).

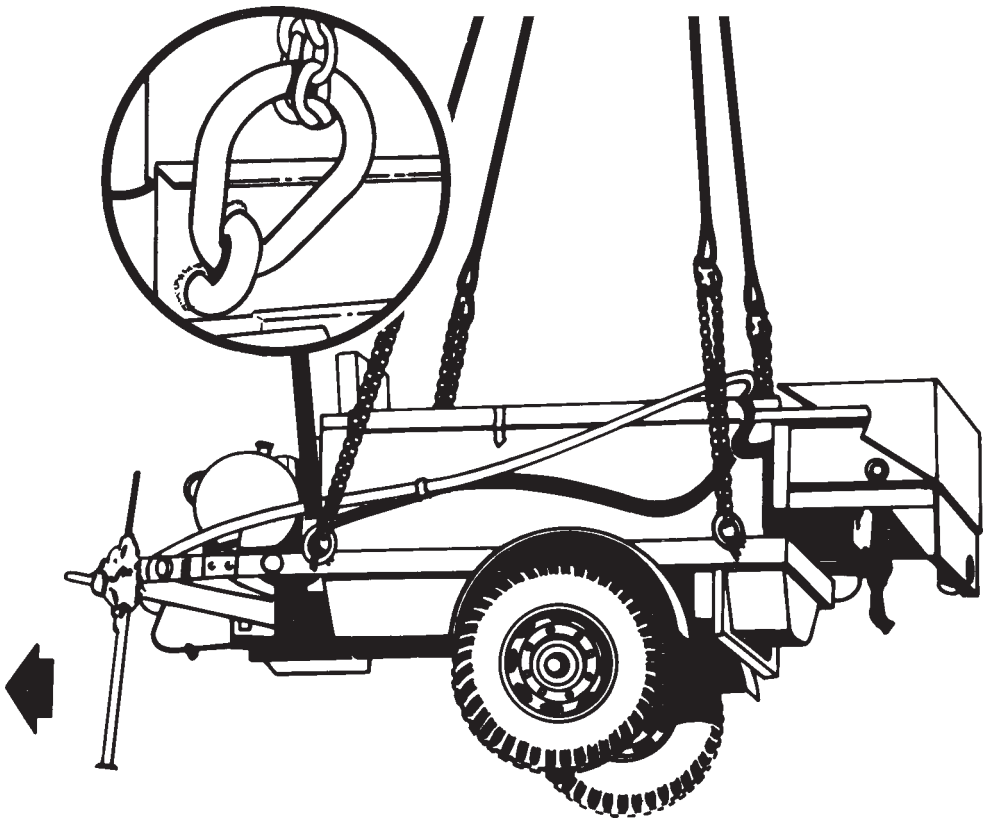

**RIGGING STEPS**

**1.** Position apex fitting on top of the tar kettle. Route outer sling legs 1 and 2 to the front of the trailer and inner sling legs 3 and 4 to the rear. Sling legs 1 and 3 must be on the left side of the load.

**2.** Loop the chain end of sling leg 1 through the left front lifting ring located on the front left corner of the trailer. Place the correct link from Table 18-5 in the grab hook. Repeat with sling leg 2 and the right front lift provision.

**3.** Loop the chain end of sling leg 3 through the left rear lifting ring located on the left rear corner of the trailer. Place the correct link from Table 18-5 in the grab hook. Repeat with sling leg 4 and the right rear lift provision.

**4.** Cluster and tie or tape (breakaway technique) all sling legs together on top of the trailer to prevent entanglement during hookup and lift-off.

*Figure 18-5. Tar Kettles*

## 18-7. 16SM Concrete Mixer

**a. Applicability.** The following item in Table 18-6 is suitable for sling load by all **ARMY** helicopters with suitable lift capacity:

**Table 18-6. 16SM Concrete Mixer**

| NOMENCLATURE | MAX WEIGHT (POUNDS) | SLING SET | LINK COUNT FRONT/REAR | RECOMMENDED AIRSPEED (KNOTS) |
|---|---|---|---|---|
| Mixer, Concrete, Trailer-Mounted, 16SM | 6,040 | 10K | 3/3 | 90 |

**b. Materials.** The following materials are required to rig this load:

**(1)** Sling set (10,000-pound capacity).

**(2)** Tape, adhesive, pressure-sensitive, 2-inch wide roll.

**(3)** Cord, nylon, Type III, 550-pound breaking strength.

**(4)** Webbing, cotton, 1/4-inch, 80-pound breaking strength.

**(5)** Chock blocks, 6- x 6- x 24-inch (4 each).

**(6)** Tie-down, cargo, CGU-1/B (as required).

**c. Personnel.** Two persons can prepare and rig this load in 20 minutes.

**d. Procedures.** The following procedures apply to this load:

**(1) Preparation.** Prepare the load using the following steps:

**(a)** Place the chock blocks to the inside of each wheel.

**(b)** Secure the tongue in the raised position using the CGU-1/B cargo tie-down strap.

**(c)** Secure the scoop elevating wheel with the scoop in the raised position with rope or Type III nyon cord.

**(2) Rigging.** Rig the load according to the steps in Figure 18-6.

**(3) Hookup.** The hookup team stands on top of the mixer. The static wand person discharges the static electricity with the static wand. The hookup person places the apex fitting onto the aircraft cargo hook. The hookup team then moves clear of the load but remains close to the load as the helicopter removes slack from the sling legs. When successful hookup is assured, the hookup team quickly exits the area underneath the helicopter to the designated rendezvous point.

**(4) Derigging.** Derigging is the reverse of the preparation and rigging procedures in steps d (1) and d (2).

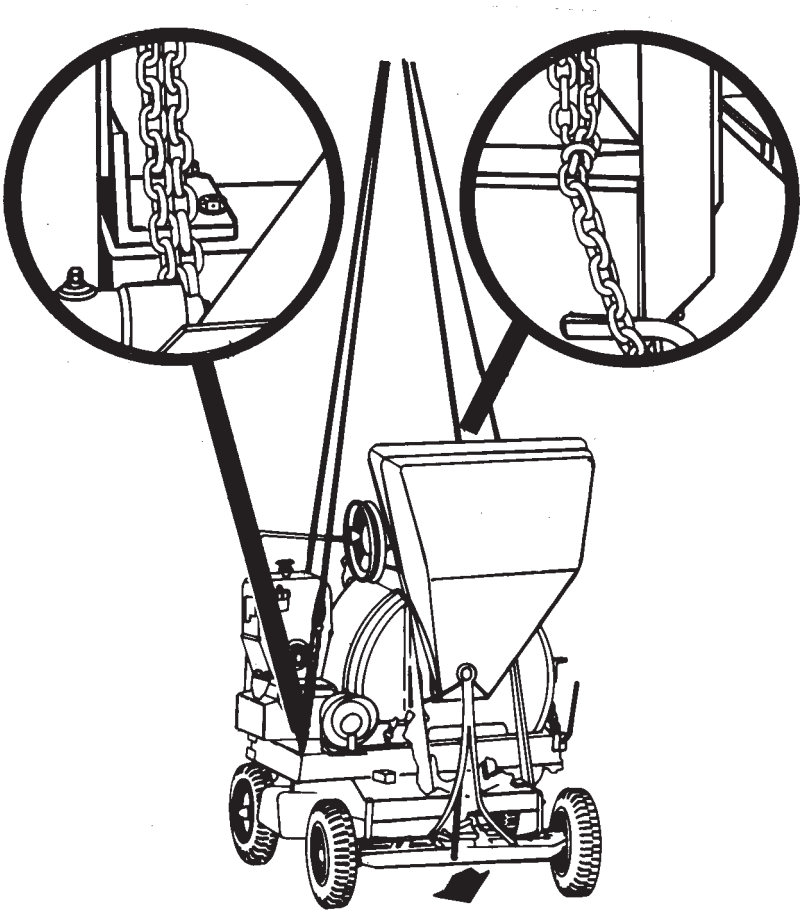

**RIGGING STEPS**

**1.** Position apex fitting on top of the mixer. Route outer sling legs 1 and 2 to the front (tongue end) of the mixer and inner sling legs 3 and 4 to the rear. Sling legs 1 and 3 must be on the left side of the load.

**2.** Loop the chain end of sling leg 1 through the left front lifting ring located on the front left corner of the trailer frame near the left front wheel. Place the correct link from Table 18-6 in the grab hook. Repeat with sling leg 2 and the right front lift provision.

**3.** Route sling leg 3 inside the scoop elevating wheel and loop the chain end through the left rear lifting ring located on the left rear corner of the trailer frame near the left rear wheel. Place the correct link from Table 18-6 in the grab hook.

**4.** Route sling leg 4 inside the fan belt housing and loop the chain end through the right rear lifting ring on the trailer frame near the right rear wheel. Place the correct link from Table 18-6 in the grab hook.

**5.** Cluster and tie or tape (breakaway technique) all sling legs together on top of the trailer to prevent entanglement during hookup and lift-off.

*Figure 18-6. 16SM Concrete Mixer*

## 18-8. Road Sweeper, Towed

**a. Applicability.** The following item in Table 18-7 is suitable for sling load by all **ARMY** helicopters with suitable lift capacity:

**Table 18-7. Road Sweeper, Towed**

| NOMENCLATURE | MAX WEIGHT (POUNDS) | SLING SET | LINK COUNT FRONT/REAR | RECOMMENDED AIRSPEED (KNOTS) |
|---|---|---|---|---|
| Sweeper, Rotary Towed, with 150-Gallon Water Tank Sprinkling System | 2,120 | 10K | 90/3 | 80 |

**b. Materials.** The following materials are required to rig this load:

**(1)** Sling set (10,000-pound capacity).

**(2)** Tape, adhesive, pressure-sensitive, 2-inch wide roll.

**(3)** Cord, nylon, Type III, 550-pound breaking strength.

**(4)** Webbing, cotton, 1/4-inch, 80-pound breaking strength.

**c. Personnel.** Two persons can prepare and rig this load in 10 minutes.

**d. Procedures.** The following procedures apply to this load:

**(1) Preparation.** Prepare the load using the following steps:

**(a)** Rotate the towing bar around and secure it in place to the top horizontal bar. Secure safety chains in place with Type III nylon cord.

**(b)** Rotate the brush to the last locking hole and secure it with the locking pin.

**(c)** Secure the hydraulic handle in the UP position with Type III nylon cord.

**(2) Rigging.** Rig the load according to the steps in Figure 18-7.

**(3) Hookup.** The hookup team stands on the frame next to the engine. The static wand person discharges the static electricity with the static wand. The hookup person places the apex fitting onto the aircraft cargo hook. The hookup team then moves clear of the load but remains close to the load as the helicopter removes slack from the sling legs. When successful hookup is assured, the hookup team quickly exits the area underneath the helicopter to the designated rendezvous point.

**(4) Derigging.** Derigging is the reverse of the preparation and rigging procedures in steps d (1) and d (2).

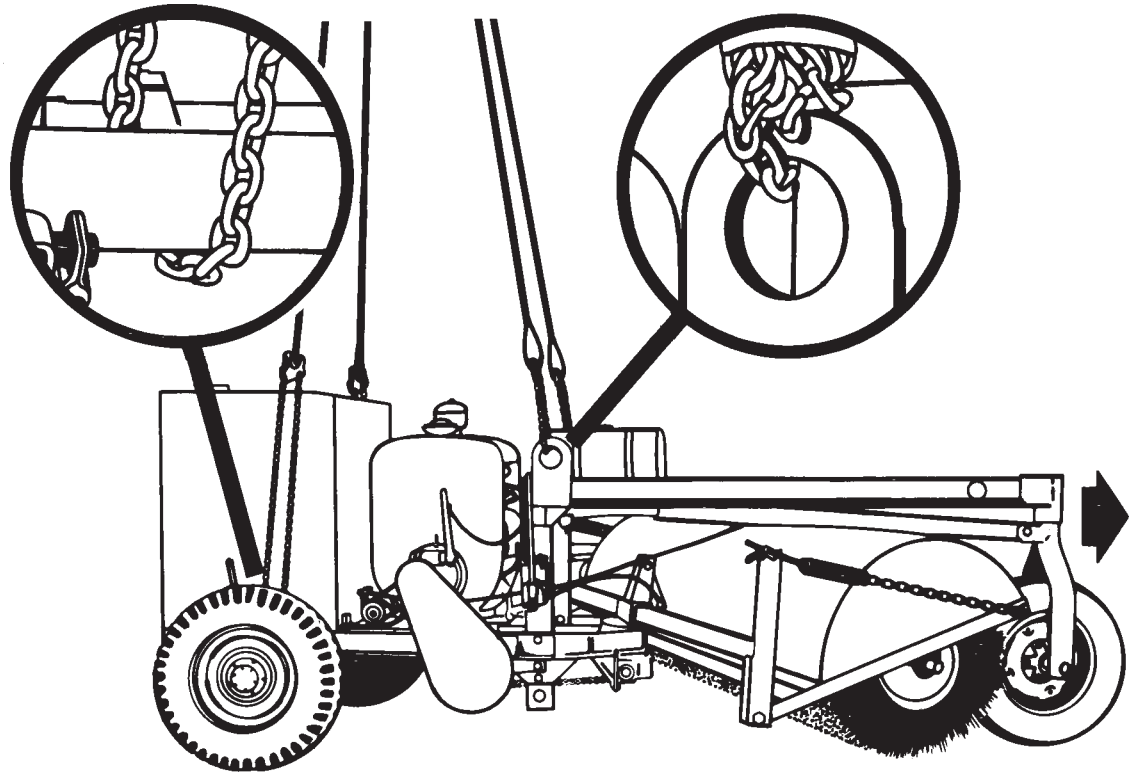

**RIGGING STEPS**

**1.** Position apex fitting on top of the road sweeper. Route outer sling legs 1 and 2 to the front of the engine and inner sling legs 3 and 4 to the rear axle. Sling legs 1 and 3 must be on the left side of the load.

**2.** Loop the chain end of sling leg 1 through the left front lifting point. Place the correct link from Table 18-7 in the grab hook. Repeat with sling leg 2 and the right front lift provision. Secure the excess chain with Type III nylon cord.

**3.** Loop the chain end of sling leg 3 around the left rear axle near the left rear wheel. Place the correct link from Table 18-7 in the grab hook. Repeat with sling leg 4 and the right rear axle.

**4.** Cluster and tie or tape (breakaway technique) all sling legs together on top of the sweeper to prevent entanglement during hookup and lift-off.

*Figure 18-7. Road Sweeper, Towed*

## 18-9. Sheepsfoot Roller, Two-Drum, MD-96

**a. Applicability.** The following item in Table 18-8 is suitable for sling load by all **ARMY** helicopters with suitable lift capacity:

**Table 18-8. Sheepsfoot Roller, Two-Drum, MD-96**

| NOMENCLATURE | MAX WEIGHT (POUNDS) | SLING SET | LINK COUNT FRONT/REAR | RECOMMENDED AIRSPEED (KNOTS) |
|---|---|---|---|---|
| Roller, Towed, Sheepsfoot, Two-Drum, MD-96 | 7,500 | 10K | 3/3 | 80 |

**b. Materials.** The following materials are required to rig this load:

**(1)** Sling set (10,000-pound capacity).

**(2)** Tape, adhesive, pressure-sensitive, 2-inch wide roll.

**(3)** Cord, nylon, Type III, 550-pound breaking strength.

**(4)** Webbing, cotton, 1/4-inch, 80-pound breaking strength.

**(5)** Chain assembly (2 each).

**c. Personnel.** Two persons can prepare and rig this load in 15 minutes.

**d. Procedures.** The following procedures apply to this load:

**(1) Preparation.** Prepare the load using the following steps:

**(a)** Wrap a chain four or five times around the two lower tie-down points aft of the inner sections of the drums and engage hook in the chain end to prevent the two drum sections from pivoting upwards. Secure the hook with tape or Type III nylon cord so the hook will not disengage.

**(b)** Repeat using the other chain on the two forward lower tie-down points.

**(2) Rigging.** Rig the load according to the steps in Figure 18-8.

**(3) Hookup.** The hookup team stands beside the roller. The static wand person discharges the static electricity with the static wand. The hookup person places the apex fitting onto the aircraft cargo hook. The hookup team then moves clear of the load but remains close to the load as the helicopter removes slack from the sling legs. When successful hookup is assured, the hookup team quickly exits the area underneath the helicopter to the designated rendezvous point.

**(4) Derigging.** Derigging is the reverse of the preparation and rigging procedures in steps d (1) and d (2).

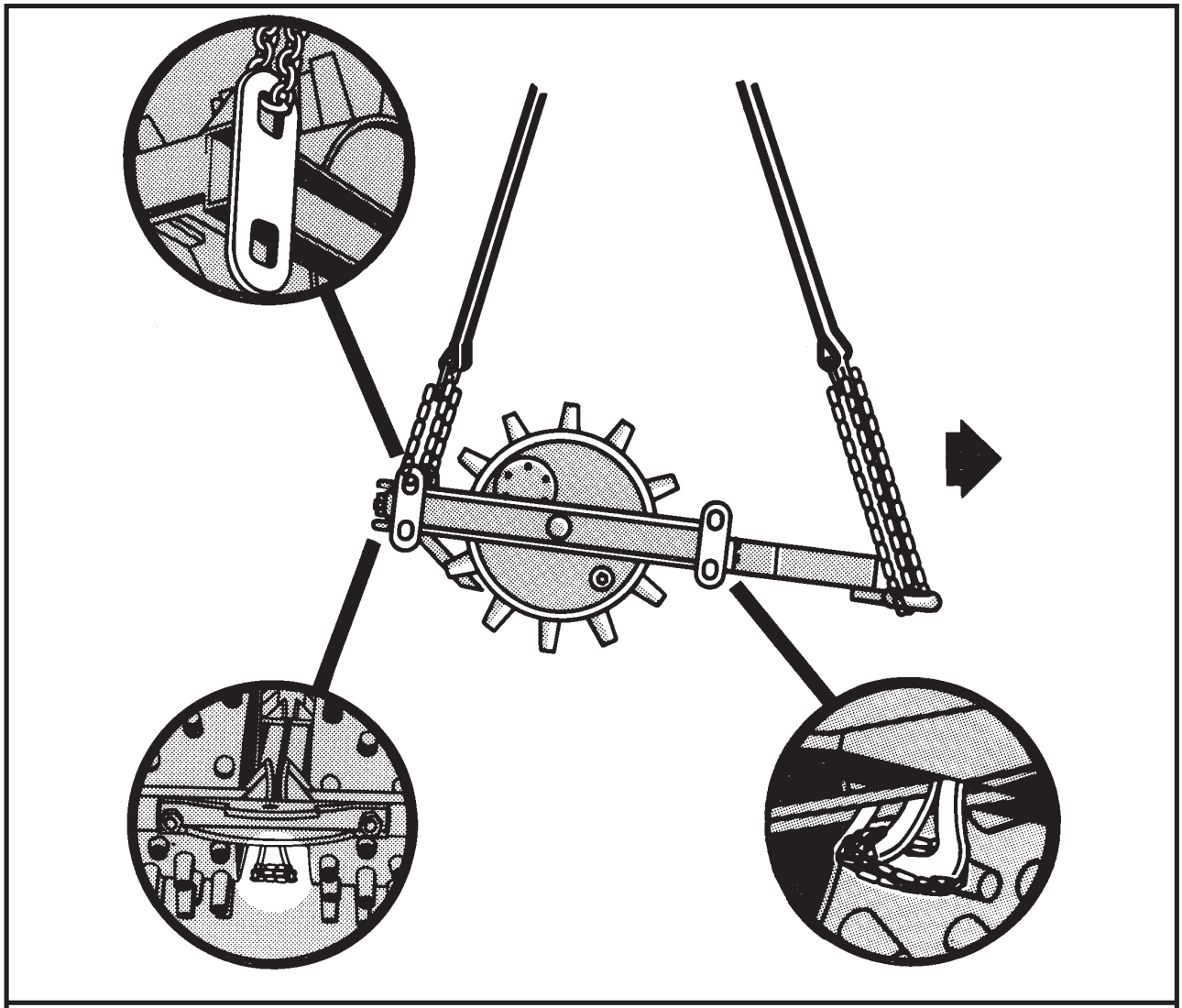

**RIGGING STEPS**

**1.** Position apex fitting on top of the rollers. Route outer sling legs 1 and 2 to the front (tongue end) of the roller and inner sling legs 3 and 4 to the rear. Sling legs 1 and 3 must be on the left side of the load.

**2.** Loop the chain end of sling leg 1 through the lunette. Place the correct link from Table 18-8 in the grab hook. Repeat with sling leg 2.

**3.** Loop the chain end of sling leg 3 through the left rear lift provision on the aft left corner of left roller. Place the correct link from Table 18-8 in the grab hook. Repeat with sling leg 4 and the right roller.

**4.** Cluster and tie or tape (breakaway technique) all sling legs together on top of the roller to prevent entanglement during hookup and lift-off.

*Figure 18-8. Sheepsfoot Roller, Two-Drum, MD-96*

## 18-10. Model 1150 Full Tracked Tractor

**a. Applicability.** The following items in Table 18-9 are suitable for sling load by all **ARMY** helicopters with suitable lift capacity:

**Table 18-9. Model 1150 Full Tracked Tractor**

| NOMENCLATURE | MAX WEIGHT (POUNDS) | SLING SET | LINK COUNT FRONT/REAR | RECOMMENDED AIRSPEED (KNOTS) |
|---|---|---|---|---|
| Tractor, Full-Tracked, Case Model 1150 without Roll Over Protection System | 21,930 | 25K | 3/3 | 90 |
| Tractor, Full-Tracked, Case Model 1150 without Blade | 18,740 | 25K | 3/23 | 90 |
| Blade | N/A | 10K | 3/3 | 90 |

**b. Materials.** The following materials are required to rig this load:

**(1)** Sling set (25,000-pound capacity).

**(2)** Sling set (10,000-pound capacity) (2 legs only).

**(3)** Tape, adhesive, pressure-sensitive, 2-inch wide roll.

**(4)** Cord, nylon, Type III, 550-pound breaking strength.

**(5)** Webbing, cotton, 1/4-inch, 80-pound breaking strength.

**(6)** Two protective plugs for hydraulic lines, if sectionalizing the tractor.

**c. Personnel.** One person can rig each load in 5 minutes. Two persons can remove ROPS and sectionalize the tractor and blade in 2 hours.

**d. Procedures.** The following procedures apply to this load:

**(1) Preparation.** Prepare the load using the following steps:

**(a)** Sectionalize the load, if required, according to the operator's manual. Install protective caps over the hoses and install trunnion caps securely.

**(b)** Place the transmission in neutral.

**(2) Rigging.** Rig the load according to the steps in Figure 18-9.

**(3) Hookup.** The hookup team stands on the driver's seat or beside the blade assembly. The static wand person discharges the static electricity with the static wand. The hookup person places the apex fitting onto the aircraft cargo hook. The hookup team then moves clear of the load but remains close to the load as the helicopter removes slack from the sling legs. When successful hookup is assured, the hookup team quickly exits the area underneath the helicopter to the designated rendezvous point.

**(4) Derigging.** Derigging is the reverse of the preparation and rigging procedures in steps d (1) and d (2).

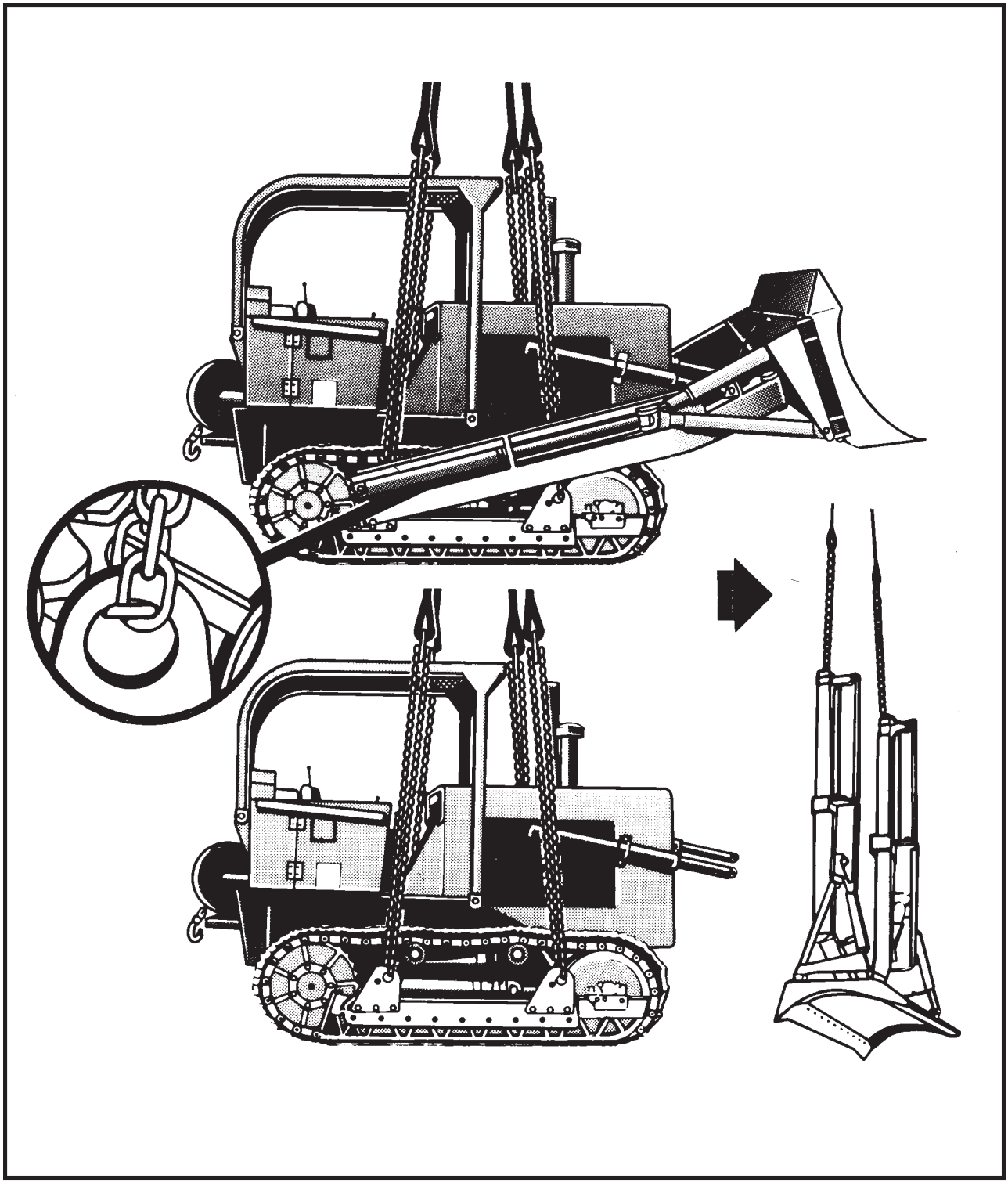

*Figure 18-9. Model 1150 Full Tracked Tractor*

| RIGGING STEPS FOR TRACTOR | RIGGING STEPS FOR BLADE |
|---|---|
| **1.** Position apex fitting on top of the center of the tractor. Route outer sling legs 1 and 2 to the front of the tractor and inner sling legs 3 and 4 to the rear. Sling legs 1 and 3 must be on the left side of the load.<br><br>**2.** Loop the chain end of sling leg 1 through the left front lift provision located by the front idler. Place the correct link from Table 18-9 in the grab hook. Repeat with sling leg 2 and the right front lift provision.<br><br>**3.** Loop the chain end of sling leg 3 through the left rear lift provision located outboard of the drive sprocket. Place the correct link from Table 18-9 in the grab hook. Repeat with sling leg 4 and the right lift provision.<br><br>**4.** Cluster and tie or tape (breakaway technique) all sling legs together on top of the tractor to prevent entanglement during hookup and lift-off. | **1.** Position apex fitting between the trunnion arms.<br><br>**2.** Loop the chain end of the left sling leg through the hole in the left trunnion cap. Place the correct link from Table 18-9 in the grab hook.<br><br>**3.** Loop the chain end of the right sling leg through the hole in the right trunnion cap. Place the correct link from Table 18-9 in the grab hook.<br><br>**4.** Cluster and tie or tape (breakaway technique) all sling legs together on top of the tractor to prevent entanglement during hookup and lift-off. |

***Figure 18-9. Model 1150 Full Tracked Tractor (continued)***

## 18-11. M4K 4000-Pound Forklift

**a. Applicability.** The following item in Table 18-10 is suitable for sling load by all **ARMY** helicopters with suitable lift capacity:

**Table 18-10. M4K 4000-Pound Forklift**

| NOMENCLATURE | MAX WEIGHT (POUNDS) | SLING SET | LINK COUNT FRONT/REAR | RECOMMENDED AIRSPEED (KNOTS) |
|---|---|---|---|---|
| Forklift, Rough Terrain, 4000 Pound M4K | 9,725 | 10K | 25/3 | 100 |

**b. Materials.** The following materials are required to rig this load:

**(1)** Sling set (10,000-pound capacity).

**(2)** Tape, adhesive, pressure-sensitive, 2-inch wide roll.

**(3)** Cord, nylon, Type III, 550-pound breaking strength.

**(4)** Webbing, cotton, 1/4-inch, 80-pound breaking strength.

**(5)** Felt sheet, cattle hair, Type IV, 1/2-inch or suitable substitute.

**(6)** Tie-down strap, cargo, CGU-1/B (as required).

**c. Personnel.** Two persons can prepare and rig this load in 20 minutes.

**d. Procedures.** The following procedures apply to this load:

**(1) Preparation.** Prepare the load using the following steps:

**(a)** Insert the locking pin or bolt and nut to prevent the front and rear ends from pivoting.

**(b)** Secure the steering wheel with Type III nylon cord. Engage the hand brake.

**(c)** Ensure the fuel tank is less than 3/4 full.

**(d)** Pad the forward edge of the roll over protection system (ROPS). Secure the padding with tape or Type III nylon cord.

**(e)** Raise the fork tines approximately 1 foot above the ground. Lift the ends of the fork tines by hand to point upward and secure the fork tines to the lift cyclinder frame using the tie-down strap.

**(2) Rigging.** Rig the load according to the steps in Figure 18-10.

**(3) Hookup.** The hookup team stands on top of the engine deck. The static wand person discharges the static electricity with the static wand. The hookup person places the apex fitting onto the aircraft cargo hook. The hookup team then moves clear of the load but remains close to the load as the helicopter removes slack from the sling legs. When successful hookup is assured, the hookup team quickly exits the area underneath the helicopter to the designated rendezvous point.

**(4) Derigging.** Derigging is the reverse of the preparation and rigging procedures in steps d (1) and d (2).

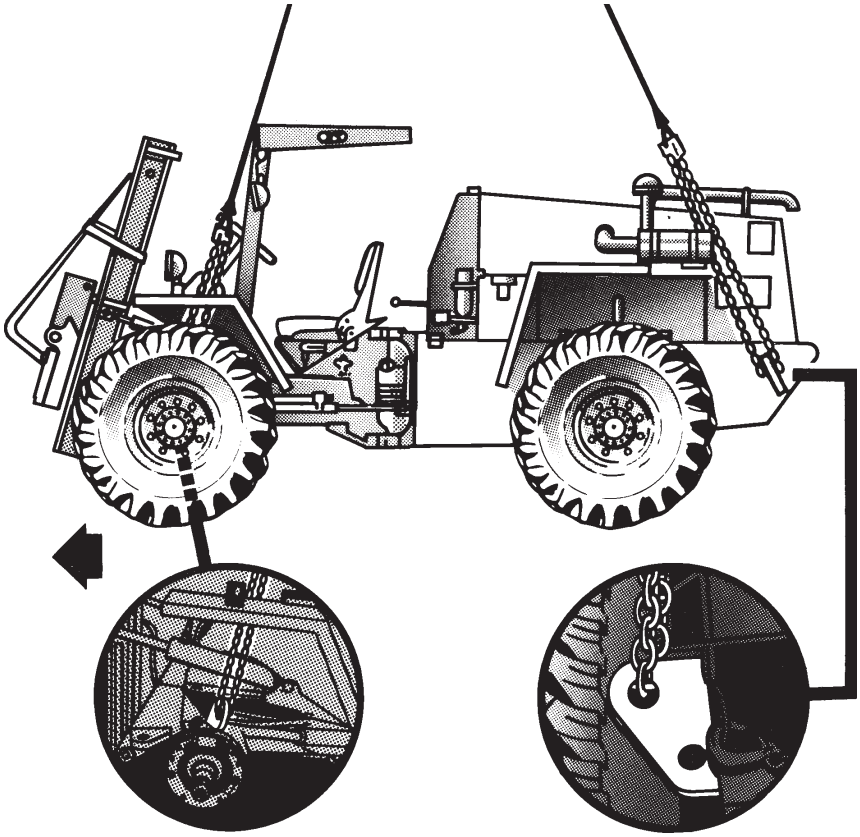

**RIGGING STEPS**

**1.** Position apex fitting on top of the engine hood. Route outer sling legs 1 and 2 to the front of the forklift. Ensure the sling legs are routed behind the lower driving light box beam mounted on the front fenders. Route inner sling legs 3 and 4 to the rear. Sling legs 1 and 3 must be on the left side of the load.

**2.** Loop the chain end of sling leg 1 through the left front lift provision located directly above the forward axle housing between the left front tire and the hydraulic cylinder. Place the correct link from Table 18-10 in the grab hook. Repeat with sling leg 2 and the right front lift provision. Secure the excess chain with Type III nylon cord.

**3.** Loop the chain end of sling leg 3 through the top hole in the left rear lift provision. Place the correct link from Table 18-10 in the grab hook. Repeat with sling leg 4 and the right rear lift provision.

**4.** Pull the aft sling legs together on top of the engine compartment and tie or tape (breakaway technique) the grab hooks together.

**5.** Cluster and tie or tape (breakaway technique) all sling legs together on top of the forklift to prevent entanglement during hookup and lift-off.

*Figure 18-10. M4K 4000-Pound Forklift*

## 18-12. Floodlight Set, Trailer-Mounted

**a. Applicability.** The following item in Table 18-11 is suitable for sling load by all **ARMY** helicopters with suitable lift capacity:

**Table 18-11. Floodlight Set, Trailer-Mounted**

| NOMENCLATURE | MAX WEIGHT (POUNDS) | SLING SET | LINK COUNT FRONT/REAR | RECOMMENDED AIRSPEED (KNOTS) |
|---|---|---|---|---|
| Floodlight Set, M762 Trailer-Mounted, Model No. HLT-3KW-M.1 | 2,300 | 10K | 40/100 | 85 |

**b. Materials.** The following materials are required to rig this load:

**(1)** Sling set (10,000-pound capacity).

**(2)** Tape, adhesive, pressure-sensitive, 2-inch wide roll.

**(3)** Cord, nylon, Type III, 550-pound breaking strength.

**(4)** Webbing, cotton, 1/4-inch, 80-pound breaking strength.

**(5)** Tie-down strap, cargo, CGU-1/B (as required).

**c. Personnel.** Two persons can prepare and rig this load in 15 minutes.

**d. Procedures.** The following procedures apply to this load:

**(1) Preparation.** Prepare the load using the following steps:

**(a)** Ensure the generator set is secured in place with the security bolts. Use the CGU-1/B tie-down straps if necessary.

**(b)** Secure the mast section and lights in place with Type III nylon cord.

**(c)** Secure all cables, hoses, and chains to the trailer tongue with tape or Type III nylon cord.

**(d)** Engage the parking brake. Raise all the leveling legs to the full up position. Secure the trailer tongue leg in the down position.

**(2) Rigging.** Rig the load according to the steps in Figure 18-11.

**(3) Hookup.** The hookup team stands alongside the load. The static wand person discharges the static electricity with the static wand. The hookup person places the apex fitting onto the aircraft cargo hook. The hookup team then moves clear of the load but remains close to the load as the helicopter removes slack from the sling legs. When successful hookup is assured, the hookup team quickly exits the area underneath the helicopter to the designated rendezvous point.

**(4) Derigging.** Derigging is the reverse of the preparation and rigging procedures in steps d (1) and d (2).

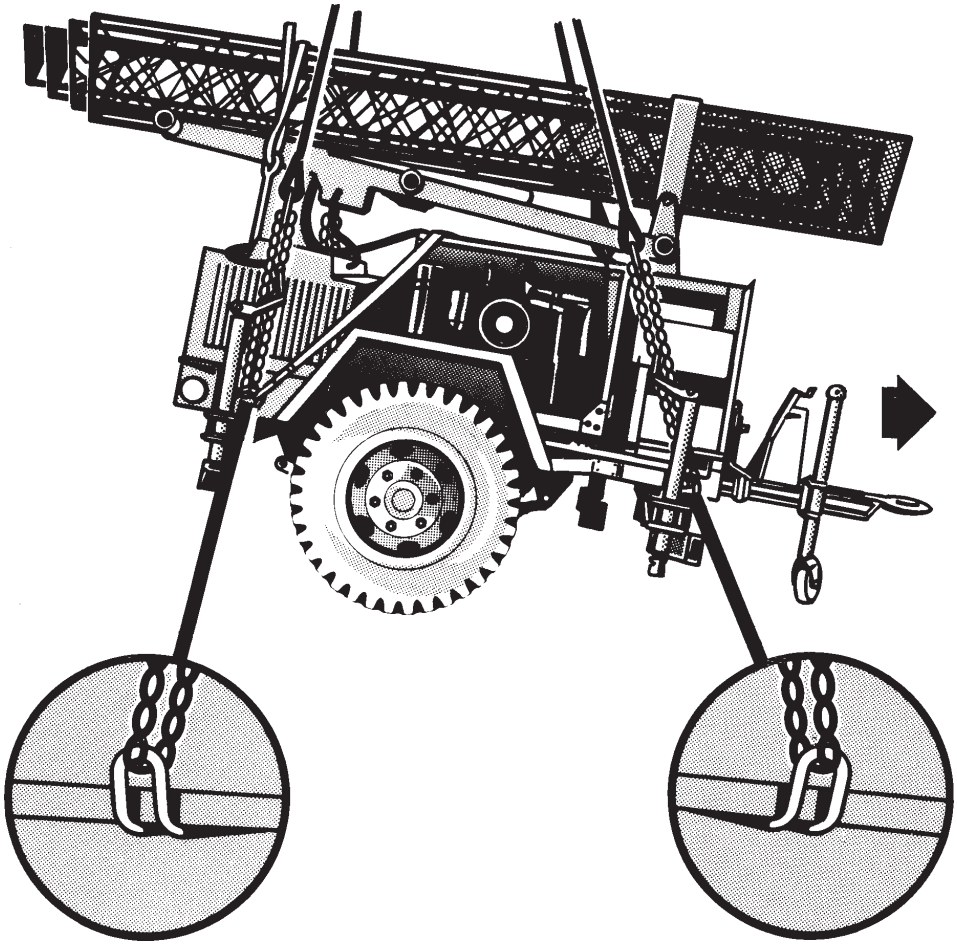

**RIGGING STEPS**

**1.** Position apex fitting on top of the floodlight set. Route outer sling legs 1 and 2 to the front of the trailer and inner sling legs 3 and 4 to the rear. Sling legs 1 and 3 must be on the left side of the load.

**2.** Loop the chain end of sling leg 1 through the left front lift provision located on the left side of the trailer. Place the correct link from Table 18-11 in the grab hook. Repeat with sling leg 2 and the right front lift provision. Secure the excess chain with Type III nylon cord.

**3.** Loop the chain end of sling leg 3 through the left rear lift provision. Place the correct link from Table 18-11 in the grab hook. Repeat with sling leg 4 and the right rear lift provision. Secure the excess chain with Type III nylon cord.

**4.** Cluster and tie or tape (breakaway technique) all sling legs together on top of the floodlight set to prevent entanglement during hookup and lift-off.

*Figure 18-11. Floodlight Set, Trailer-Mounted*

THIS PAGE INTENTIONALLY LEFT BLANK

# CHAPTER 19

# SUITABLE SINGLE-POINT RIGGING PROCEDURES FOR LIQUID CONTAINERS

## 19-1. Introduction

This chapter contains rigging procedures for single-point lift of liquid containers that are suitable for sling load. Each rigging procedure is found in a paragraph that includes a description of the load, materials required for rigging, and steps to complete the procedure. An applicability paragraph is also a part of each paragraph and identifies the suitable loads. The suitable single-point rigging procedures for liquid containers are in this section. Paragraphs 19-2 through 19-4 give detailed instructions for rigging loads.

**NOTE: Reach Pendants may be used on all single point loads. A static discharge person is not required when using a Reach Pendant.**

## 19-2. Tank, Fabric, Collapsible, 10,000-Gallon

**a. Applicability.** The following item in Table 19-1 is suitable for sling load by all **ARMY** helicopters with suitable lift capacity:

**Table 19-1. Tank, Fabric, Collapsible, 10,000-Gallon**

| NOMENCLATURE | MAX WEIGHT (POUNDS) | SLING SET | LINK COUNT FRONT/REAR | RECOMMENDED AIRSPEED (KNOTS) |
|---|---|---|---|---|
| Tank, Fabric, Collapsible, 10,000-gallon | 1,040 | 10K | 100/100 | 35 |

**CAUTION**

**THIS LOAD MAY BECOME UNSTABLE AT AIRSPEEDS ABOVE 35 KNOTS**

**b. Materials.** The following materials are required to rig this load:

**(1)** Sling set (10,000-pound capacity).

**(2)** Tape, adhesive, pressure-sensitive, 2-inch wide roll.

**(3)** Cord, nylon, Type III, 550-pound breaking strength.

**(4)** Webbing, cotton, 1/4-inch, 80-pound breaking strength.

**c. Personnel.** Two persons can prepare and rig this load in 10 minutes.

**d. Procedures.** The following procedures apply to this load:

**(1) Preparation.** Ensure all safety latches on the cover are securely closed.

**(2) Rigging.** Rig the load according to the steps in Figure 19-1.

**NOTE: Do not carry more than one tank at a time.**

**(3) Hookup.** The hookup team stands alongside the load. The static wand person discharges the static electricity with the static wand. The hookup person places the apex fitting onto the aircraft cargo hook. The hookup

team then moves clear of the load but remains close to the load as the helicopter removes slack from the sling legs. When successful hookup is assured, the hookup team quickly exits the area underneath the helicopter to the designated rendezvous point.

**(4) Derigging.** Derigging is the reverse of the preparation and rigging procedures in steps d (1) and d (2).

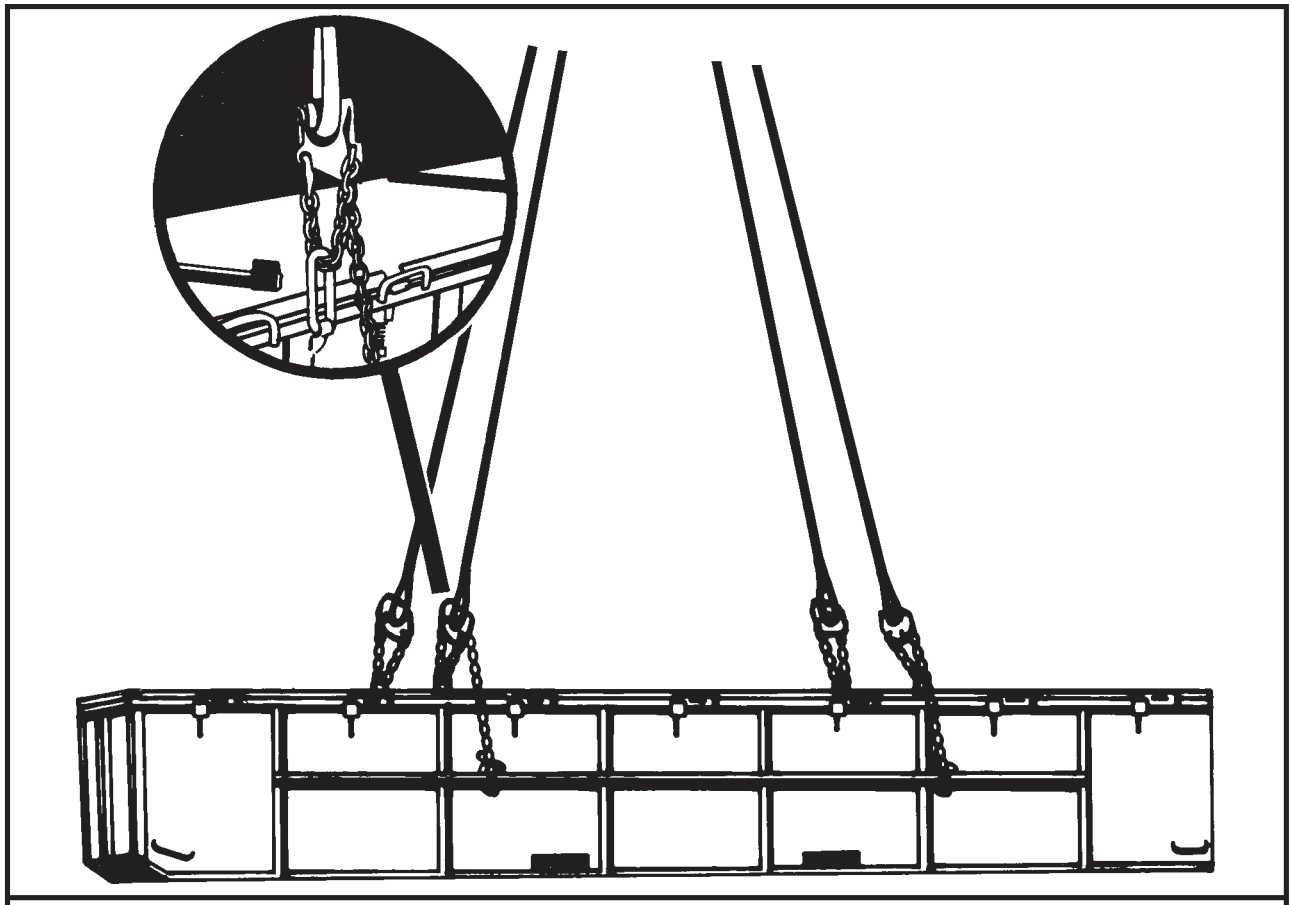

**RIGGING STEPS**

**1.** Position apex fitting on top of the center of the tank. Route outer sling legs 1 and 2 to the front of the tank and inner sling legs 3 and 4 to the rear. Sling legs 1 and 3 must be on the left side of the load.

**2.** Loop the chain end of sling leg 1 through the left front lift provision located on the left forward side of the tank. Place the correct link from Table 19-1 in the grab hook. Repeat with sling leg 2 and the right front lift provision. Secure the excess chain with Type III nylon cord.

**3.** Loop the chain end of sling leg 3 through the left rear lift provision. Place the correct link from Table 19-1 in the grab hook. Repeat with sling leg 4 and the right rear lift provision. Secure the excess chain with Type III nylon cord.

**4.** Cluster and tie or tape (breakaway technique) all sling legs together on top of the tank to prevent entanglement during hookup and lift-off.

*Figure 19-1. Tank, Fabric, Collapsible, 10,000-Gallon*

## 19-3. 60,000-Gallon Fuel System Supply Point

**a. Applicability.** The following items in Table 19-2 are suitable for sling load by all **ARMY** helicopters with suitable lift capacity:

**Table 19-2. 60,000-Gallon Fuel System Supply Point**

| NOMENCLATURE | MAX WEIGHT (POUNDS) | SLING SET | LINK COUNT FRONT/REAR | RECOMMENDED AIRSPEED (KNOTS) |
|---|---|---|---|---|
| Fuel System Supply Point, 60,000-Gallon | N/A | N/A | N/A | N/A |
| Net #1 - Pump | 1,300 | 5K Net | N/A | 100 |
| Net #2 - Tanks | 6,000 | 10K Net | N/A | 100 |
| Net #3 - Hoses | 2,000 | 5K Net | N/A | 100 |
| Net #4 - Hoses | 2,200 | 5K Net | N/A | 100 |
| Net #5 - Hoses | 4,000 | 5K Net | N/A | 100 |

**b. Materials.** The following materials are required to rig this load:

**(1)** Net, cargo (5,000-pound capacity) (4 each).

**(2)** Net, cargo (10,000-pound capacity).

**(3)** Sling set (10,000-pound capacity) (2 each).

**(4)** Tape, adhesive, pressure-sensitive, 2-inch wide roll.

**(5)** Cord, nylon, Type III, 550-pound breaking strength.

**(6)** Webbing, cotton, 1/4-inch, 80-pound breaking strength.

**(7)** Apex fitting (25,000-pound capacity).

**c. Personnel.** Eight persons can prepare and rig this load in 60 minutes.

**d. Procedures.** The following procedures apply to this load:

**(1) Preparation.** Prepare the load using the following steps:

**(2) Rigging.** Rig the load according to the steps in Figure 19-2.

**(a)** Spread out all five nets side by side.

**(b)** Center the pump on net #1 (5,000-pound capacity).

**(c)** Center two metal containers with tanks and fittings on net #2 (10,000-pound capacity). Position the third container on top of the bottom two containers.

**(d)** Center both filters on net #3. Tie three fire extinguishers to each side of the filters with Type III nylon cord. Place six rolled hoses on top of the filters. Pull the net up around the load and tie the corners to the pumps.

**(e)** Place 15 long hoses centered on net #4 (5,000-pound capacity). Build a pyramid of 120 hoses.

**(f)** Secure all signs on a pallet and secure with Type III nylon cord. Center the net on net #5. Secure four fire extinguishers on a second pallet and center on the net. Pile all remaining hoses on the pallets.

**(3) Hookup.** The hookup team stands alongside the load. The static wand person discharges the static electricity with the static wand. The hookup person places the apex fitting onto the aircraft cargo hook. The hookup team then moves clear of the load but remains close to the load as the helicopter removes slack from the sling legs. When successful hookup is assured, the hookup team quickly exits the area underneath the helicopter to the designated rendezvous point.

**(4) Derigging.** Derigging is the reverse of the preparation and rigging procedures in steps d (1) and d (2).

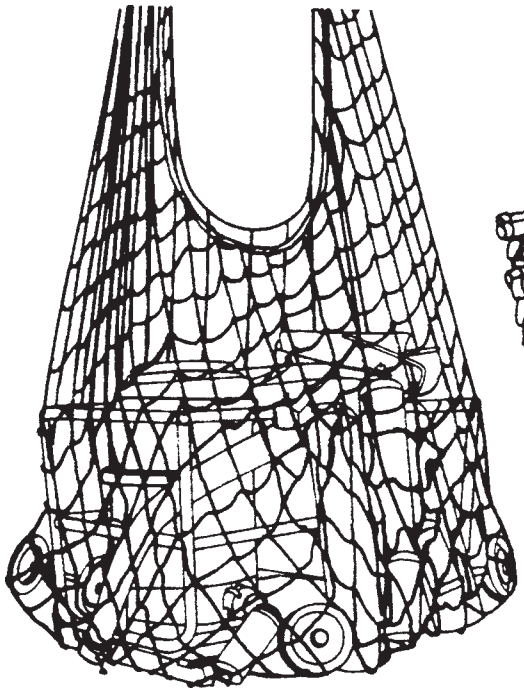

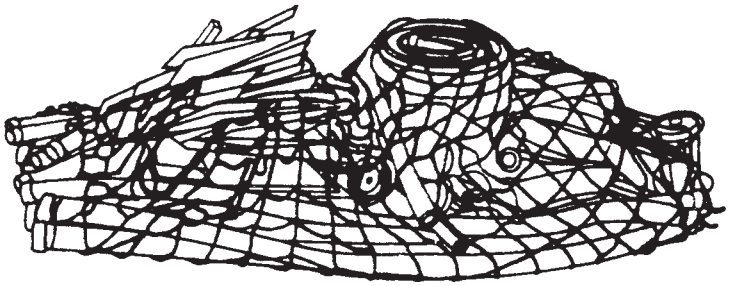

**NOTE: If both loads are being moved as one load, place both sling set apex fittings on a 25,000-pound capacity apex fitting.**

**RIGGING STEPS**

| Load 1 | Load 2 |
|---|---|
| **1.** Loop the chain end of one sling leg through the apex fitting of net 1 and insert link 3 in the grab hook. | **1.** Loop the chain end of one sling leg through the apex fitting of net 3 and insert link 3 in the grab hook. |
| **2.** Loop the chain end of three sling legs through the apex fitting of net 2 and insert link 3 in the grab hook. | **2.** Loop the chain end of one sling leg through the apex fitting of net 4 and insert link 3 in the grab hook. |
| | **3.** Loop the chain end of two sling legs through the apex fitting of net 5 and insert link 3 in the grab hook. |

*Figure 19-2. 60,000-Gallon Fuel System Supply Point*

## 19-4. One to Six 250-Gallon Water Drums

**a. Applicability.** The following items in Table 19-3 are suitable for sling load by all **ARMY** helicopters with suitable lift capacity:

**Table 19-3. One to Six 250-Gallon Water Drums**

| NOMENCLATURE | MAX WEIGHT (POUNDS) | SLING SET | LINK COUNT FRONT/REAR | RECOMMENDED AIRSPEED (KNOTS) |
|---|---|---|---|---|
| One Drum, Fabric, Water, 250-Gallon | 2,210 | 10K | 3 | 80 |
| Two Drums, Fabric, Water, 250-Gallon | 4,420 | 10K | 3/3 | 80 |
| Three Drums, Fabric, Water, 250-Gallon | 6,630 | 10K | 3/20 | 80 |
| Four Drums, Fabric, Water, 250-Gallon | 8,840 | 10K | 3/3 | 80 |
| Five Drums, Fabric, Water, 250-Gallon | 11,050 | 10K | 3/3/33 | 80 |
| Six Drums, Fabric, Water, 250-Gallon | 13,260 | 10K | 3/3/22 | 80 |

**b. Materials.** The following materials are required to rig this load:

**(1)** Sling set (10,000-pound capacity) with 2 additional sling legs.

**(2)** Tape, adhesive, pressure-sensitive, 2-inch wide roll.

**(3)** Cord, nylon, Type III, 550-pound breaking strength.

**(4)** Webbing, cotton, 1/4-inch, 80-pound breaking strength.

**(5)** Apex fitting (25,000-pound capacity).

**c. Personnel.** One person can prepare and rig one drum in 5 minutes; add 5 minutes for each additional drum.

**d. Procedures.** The following procedures apply to this load:

**(1) Preparation.** Align all drums side by side (if appropriate) and rotate the hubs of each drum so a clevis is positioned at the top.

**(2) Rigging.** Rig the load according to the steps in Figure 19-3.

**NOTE: Route the sling legs so the odd numbered sling legs are to one side of the drum(s) and the even numbered sling legs are to the other side.**

**(3) Hookup.** The hookup team stands alongside the load. The static wand person discharges the static electricity with the static wand. The hookup person places the apex fitting onto the aircraft cargo hook. The hookup team then moves clear of the load but remains close to the load as the helicopter removes slack from the sling legs. When successful hookup is assured, the hookup team quickly exits the area underneath the helicopter to the designated rendezvous point.

**(4) Derigging.** Derigging is the reverse of the preparation and rigging procedures in steps d (1) and d (2).

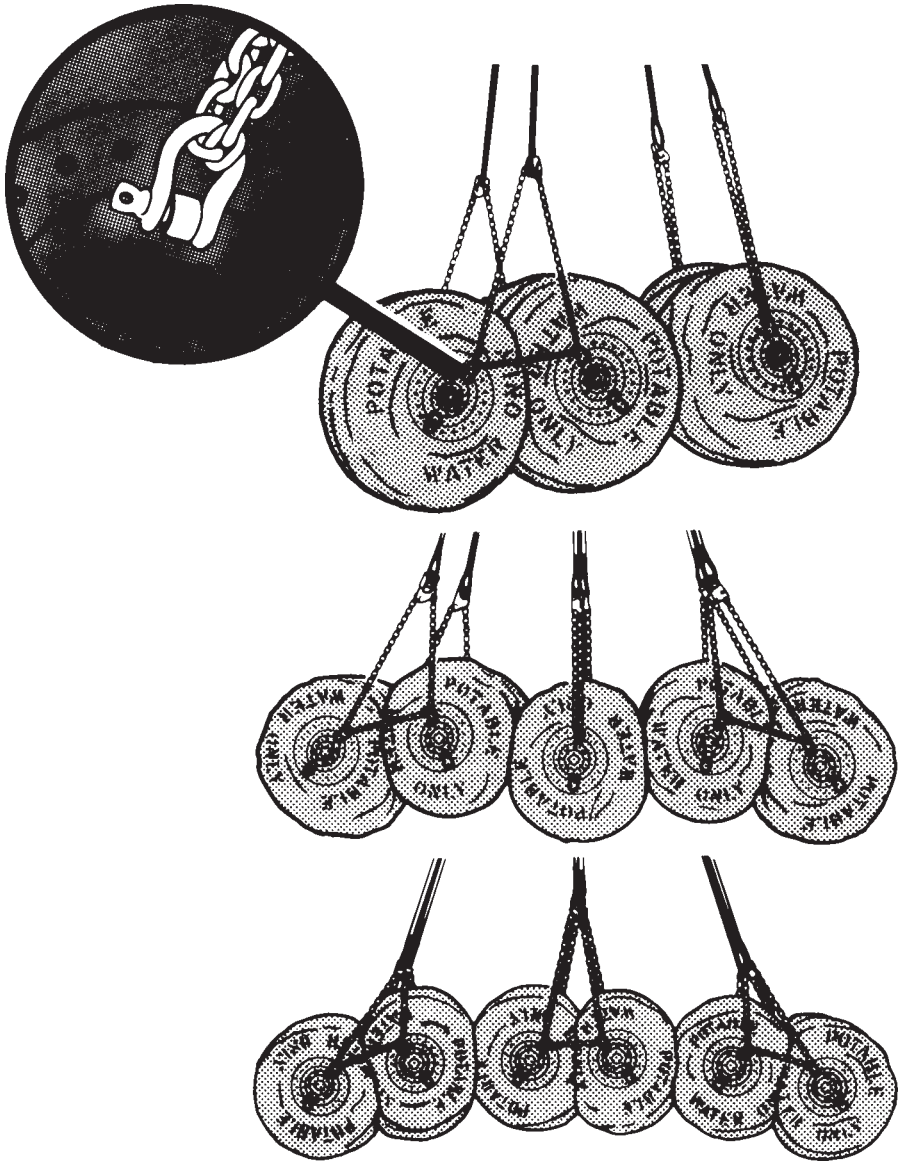


*Figure 19-3. One to Six 250-Gallon Water Drums*

## RIGGING STEPS

### ONE DRUM

**1.** Position apex fitting beside the drum. Route sling legs 1 and 3 to one side of the drum and sling legs 2 and 4 to the other side.

**2.** Loop the chain end of the sling legs through the clevis at the top of the hub. Place the correct link from Table 19-3 in the grab hook.

**NOTE: A single drum may be moved using a two-leg sling set.**

### TWO DRUMS

**1.** Position apex fitting beside or on top of the two drums. Route outer sling legs 1 and 2 to the front drum and inner sling legs 3 and 4 to the rear drum.

**2.** Loop the chain end of the sling leg through the appropriate clevis at the top of the hub for each drum. Place the correct link from Table 19-3 in the grab hook.

### THREE DRUMS

**1.** Position apex fitting beside or on top of the drums. Route outer sling legs 1 and 2 to the front drum and inner sling legs 3 and 4 to the rear drum.

**2.** Loop the chain end of sling leg 1 through the clevis at the top of the outer drum and through the clevis at the top of the center drum. Place the correct link from Table 19-3 in the grab hook.

**3.** Loop the chain end of sling leg 3 through the clevis at the top of the hub of the outer drum. Place the correct link from Table 19-3 in the grab hook. Repeat with sling leg 4 on the other side of the drum. Secure the excess chain with Type III nylon cord.

### FOUR DRUMS

**1.** Position apex fitting beside or on top of the drums. Route outer sling legs 1 and 2 to the front drum and inner sling legs 3 and 4 to the rear drum.

**2.** Loop the chain end of sling leg 1 through the clevis at the top of the outer drum and through the clevis at the top of the next inner drum. Place the correct link from Table 19-3 in the grab hook. Repeat with sling leg 2 on the other side of the drums.

**3.** Loop the chain end of sling leg 3 through the clevis at the top of the hub of the rear outer drum and through the clevis at the top of the next inner drum. Place the correct link from Table 19-3 in the grab hook. Repeat with sling leg 4 on the other side of the drums.

### FIVE DRUMS

**1.** Configure a six-leg sling set using a 25,000-pound capacity apex fitting and six sling leg assemblies.

**2.** Position apex fitting on top of the drums. Route outer sling legs 1 and 2 to the front drum, middle sling legs 3 and 4 to the rear drum and inner sling legs 5 and 6 to the center drum.

**3.** Loop the chain end of sling leg 1 through the left clevis on outer drum and through the left clevis of an adjacent drum. Place the correct link from Table 19-3 in the grab hook. Repeat with sling leg 2 on the right side of the drums.

**4.** Loop the chain end of sling leg 3 through the left clevis on outer drum and through the left clevis of an adjacent drum. Place the correct link from Table 19-3 in the grab hook. Repeat with sling leg 4 on the right side of the drums.

**5.** Loop the chain end of sling leg 5 through the top clevis of the center drum. Place the correct link from Table 19-3 in the grab hook. Repeat with sling leg 6 on the right side of the drum. Secure the excess chain with Type III nylon cord.

### SIX DRUMS

**1.** Configure a six-leg sling set using a 25,000-pound capacity apex fitting and six sling leg assemblies.

**2.** Position apex fitting on top of the drums. Route outer sling legs 1 and 2 to the front drum, middle sling legs 3 and 4 to the rear drum and inner sling legs 5 and 6 to the center drum.

**3.** Loop the chain end of sling leg 1 through the left clevis on outer drum and through the left clevis of an adjacent drum. Place the correct link from Table 19-3 in the grab hook. Repeat with sling leg 2 on the right side of the drums.

**4.** Loop the chain end of sling leg 3 through the left clevis on outer drum and through the left clevis of an adjacent drum. Place the correct link from Table 19-3 in the grab hook. Repeat with sling leg 4 on the right side of the drums.

**5.** Loop the chain end of sling leg 5 through the top clevis of both center drums. Place the correct link from Table 19-3 in the grab hook. Repeat with sling leg 6 on the right side of the drums. Secure the excess chain with Type III nylon cord.

*Figure 19-3. One to Six 250-Gallon Water Drums (continued)*

THIS PAGE INTENTIONALLY LEFT BLANK

# CHAPTER 20

# SUITABLE SINGLE-POINT RIGGING PROCEDURES FOR SHELTERS

## 20-1. Introduction

This chapter contains rigging procedures for single-point lift of shelters that are suitable for sling load. Each rigging procedure is found in a paragraph that includes a description of the load, materials required for rigging, and steps to complete the procedure. An applicability paragraph is also a part of each paragraph and identifies the suitable loads. The suitable single-point rigging procedures for shelters are in this section.

Paragraphs 20-2 and 20-3 give detailed instructions for rigging loads.

**NOTE: Reach Pendants may be used on all single point loads. A static discharge person is not required when using a Reach Pendant.**

## 20-2. Tool Set, Aviation Maintenance, SE 1, Airmobile

**a. Applicability.** The following item in Table 20-1 is suitable for sling load by all **ARMY** helicopters with suitable lift capacity:

**Table 20-1. Tool Set, Aviation Maintenance, SE 1, Airmobile**

| NOMENCLATURE | MAX WEIGHT (POUNDS) | SLING SET | LINK COUNT FRONT/REAR | RECOMMENDED AIRSPEED (KNOTS) |
|---|---|---|---|---|
| Tool Set, Aviation Maintenance, SE 1, Airmobile | 3,030 | 10K | 30/30 | 90 |

**b. Materials.** The following materials are required to rig this load:

**(1)** Sling set (10,000-pound capacity).

**(2)** Tape, adhesive, pressure-sensitive, 2-inch wide roll.

**(3)** Cord, nylon, Type III, 550-pound breaking strength.

**(4)** Webbing, cotton, 1/4-inch, 80-pound breaking strength.

**(5)** Felt sheet, cattle hair, Type IV, 1/2-inch or suitable substitute.

**c. Personnel.** Two persons can prepare and rig this load in 15 minutes.

**d. Procedures.** The following procedures apply to this load:

**(1) Preparation.** Prepare the load using the following steps:

**(a)** Secure the tongue in the UP position with Type III nylon cord. Secure the safety chains and hoses to the tongue with tape or Type III nylon cord. Secure the jack handles in position with tape or Type III nylon cord.

**(b)** Pad the rear axle on each side of the towing pintle and secure the padding with tape or Type III nylon cord.

**(2) Rigging.** Rig the load according to the steps in Figure 20-1.

**(3) Hookup.** The hookup team stands on top of the tool set. The static wand person discharges the static

electricity with the static wand. The hookup person places the apex fitting onto the aircraft cargo hook. The hookup team then moves clear of the load but remains close to the load as the helicopter removes slack from the sling legs. When successful hookup is assured, the hookup team quickly exits the area underneath the helicopter to the designated rendezvous point.

**(4) Derigging.** Derigging is the reverse of the preparation and rigging procedures in steps d (1) and d (2).

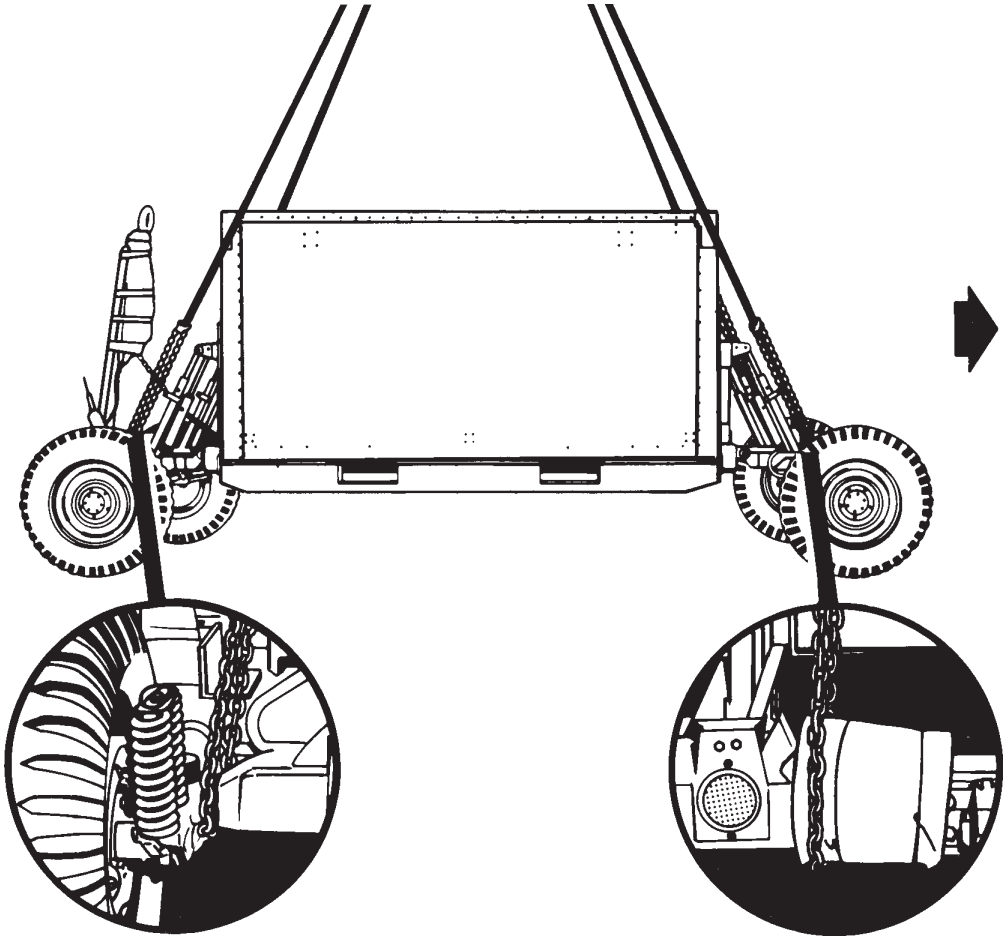

**RIGGING STEPS**

**1.** Position apex fitting on top of the tool set. Route outer sling legs 1 and 2 to the front (tongue end) of the tool set and inner sling legs 3 and 4 to the rear. Sling legs 1 and 3 must be on the left side of the load.

**2.** Loop the chain end of sling leg 1 around the left front axle just inside the suspension spring. Place the correct link from Table 20-1 in the grab hook. Repeat with sling leg 2 and the right front axle. Secure the excess chain with Type III nylon cord.

**3.** Loop the chain end of sling leg 3 around the padded area on the left rear axle. Place the correct link from Table 20-1 in the grab hook. Repeat with sling leg 4 and the right rear axle. Secure the excess chain with Type III nylon cord.

**4.** Cluster and tie or tape (breakaway technique) all sling legs together on top of the tool set to prevent entanglement during hookup and lift-off.

*Figure 20-1. Tool Set, Aviation Maintenance, SE 1, Airmobile*

## 20-3. Shop, Portable, Aircraft Maintenance (SPAM)

**a. Applicability.** The following item in Table 20-2 is suitable for sling load by all **ARMY** helicopters with suitable lift capacity:

**Table 20-2. Shop, Portable, Aircraft Maintenance (SPAM)**

| NOMENCLATURE | MAX WEIGHT (POUNDS) | SLING SET | LINK COUNT FRONT/REAR | RECOMMENDED AIRSPEED (KNOTS) |
|---|---|---|---|---|
| Shop, Portable, Aircraft Maintenance | 5,425 | 10K | 3/3 | 60 |

**b. Materials.** The following materials are required to rig this load:

**(1)** Sling set (10,000-pound capacity).

**(2)** Tape, adhesive, pressure-sensitive, 2-inch wide roll.

**(3)** Cord, nylon, Type III, 550-pound breaking strength.

**(4)** Webbing, cotton, 1/4-inch, 80-pound breaking strength.

**c. Personnel.** Two persons can prepare and rig this load in 5 minutes.

**d. Procedures.** The following procedures apply to this load:

**(1) Preparation.** Prepare the load using the following steps:

**(a)** Secure all vents and doors with tape or Type III nylon cord.

**(b)** Secure the fold-out safety cable with tape or Type III nylon cord.

**(2) Rigging.** Rig the load according to the steps in Figure 20-2.

**(3) Hookup.** The hookup team stands on top of the SPAM. The static wand person discharges the static electricity with the static wand. The hookup person places the apex fitting onto the aircraft cargo hook. The hookup team then moves clear of the load but remains close to the load as the helicopter removes slack from the sling legs. When successful hookup is assured, the hookup team quickly exits the area underneath the helicopter to the designated rendezvous point.

**(4) Derigging.** Derigging is the reverse of the preparation and rigging procedures in steps d (1) and d (2).

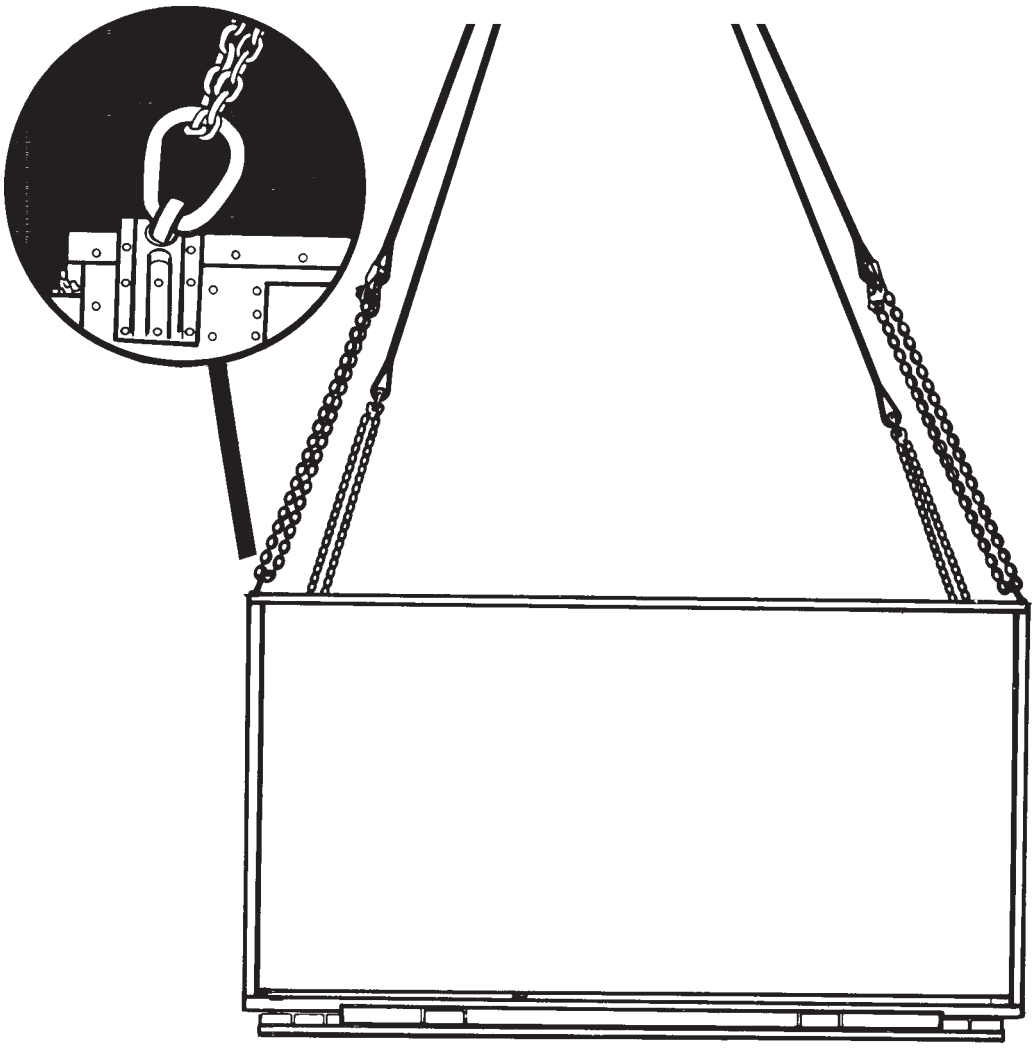

**RIGGING STEPS**

**1.** Position apex fitting on top of the shop. Route outer sling legs 1 and 2 to the front (door end) of the tool set and inner sling legs 3 and 4 to the rear. Sling legs 1 and 3 must be on the left side of the load.

**2.** Loop the chain end of sling leg 1 through the left front lift ring. Place the correct link from Table 20-2 in the grab hook. Repeat with sling leg 2 and the right front lift ring.

**3.** Loop the chain end of sling leg 3 through the left rear lift ring. Place the correct link from Table 20-2 in the grab hook. Repeat with sling leg 4 and the right rear lift ring.

**4.** Cluster and tie or tape (breakaway technique) all sling legs together on top of the shop to prevent entanglement during hookup and lift-off.

*Figure 20-2. Shop, Portable, Aircraft Maintenance (SPAM)*

# CHAPTER 21

# SUITABLE SINGLE-POINT RIGGING PROCEDURES FOR CONTAINERS

## 21-1. Introduction

This chapter contains rigging procedures for single-point lift of containers that are suitable for sling load. Each rigging procedure is found in a paragraph that includes a description of the load, materials required for rigging, and steps to complete the procedure. An applicability paragraph is also a part of each paragraph and identifies the suitable loads. The suitable single-point rigging procedures for containers are in this section.

Paragraphs 21-2 and 21-3 give detailed instructions for rigging loads.

**NOTE: Reach Pendants may be used on all single point loads. A static discharge person is not required when using a Reach Pendant.**

## 21-2. One CONEX Container

**a. Applicability.** The following items in Table 21-1 are suitable for sling load by all **ARMY** helicopters with suitable lift capacity:

**Table 21-1. One CONEX Container**

| NOMENCLATURE | MAX WEIGHT (POUNDS) | SLING SET | LINK COUNT FRONT/REAR | RECOMMENDED AIRSPEED (KNOTS) |
|---|---|---|---|---|
| Box, Metal, Shipping, CONEX, 270 cubic feet | 1,560 | 10K | 3/3 | 60 |
| Box, Metal, Shipping, CONEX, 295 cubic feet | 2,140 | 10K | 3/3 | 60 |

**b. Materials.** The following materials are required to rig this load:

**(1)** Sling set (10,000-pound capacity).

**(2)** Tape, adhesive, pressure-sensitive, 2-inch wide roll.

**(3)** Cord, nylon, Type III, 550-pound breaking strength.

**(4)** Webbing, cotton, 1/4-inch, 80-pound breaking strength.

**(5)** Tie-down strap CGU-1/B.

**c. Personnel.** One person can prepare and rig this load in 10 minutes.

**d. Procedures.** The following procedures apply to this load:

**(1) Preparation.** Prepare the load using the following steps:

**(a)** Close the doors.

**(b)** Secure the doors by routing CGU-1/Bs around the entire container.

**(2) Rigging.** Rig the load according to the steps in Figure 21-1.

**(3) Hookup.** The hookup team stands on top of the container. The static wand person discharges the static

electricity with the static wand. The hookup person places the apex fitting onto the aircraft cargo hook. The hookup team then moves clear of the load but remains close to the load as the helicopter removes slack from the sling legs. When successful hookup is assured, the hookup team quickly exits the area underneath the helicopter to the designated rendezvous point.

**(4) Derigging.** Derigging is the reverse of the preparation and rigging procedures in steps d (1) and d (2).

**RIGGING STEPS**

**1.** Position apex fitting on top of the container. Route outer sling legs 1 and 2 to the front of the load and inner sling legs 3 and 4 to the rear. Sling legs 1 and 3 must be on the left side of the load.

**2.** Loop the chain end of sling leg 1 through the left front lift provision. Place the correct link from Table 21-1 in the grab hook. Repeat with sling leg 2 and the right front lift provision.

**3.** Loop the chain end of sling leg 3 through the left rear lift provision. Place the correct link from Table 21-1 in the grab hook. Repeat with sling leg 4 and the right rear lift provision.

**4.** Cluster and tie or tape (breakaway technique) all sling legs together on top of the container to prevent entanglement during hookup and lift-off.

*Figure 21-1. One CONEX Container*

## 21-3. Two CONEX Containers

**a. Applicability.** The following items in Table 21-2 are suitable for sling load by all **ARMY** helicopters with suitable lift capacity:

**Table 21-2. Two CONEX Containers**

| NOMENCLATURE | MAX WEIGHT (POUNDS) | SLING SET | LINK COUNT FRONT/REAR | RECOMMENDED AIRSPEED (KNOTS) |
|---|---|---|---|---|
| Two Boxes, Metal, Shipping, CONEX, 270 cubic feet | 10,000 | 10K | 3/60/3 | 95 |
| Two Boxes, Metal, Shipping, CONEX, 295 cubic feet | 10,000 | 10K | 3/60/3 | 95 |

**b. Materials.** The following materials are required to rig this load:

**(1)** Sling set (10,000-pound capacity) with two additional sling leg assemblies.

**(2)** Tape, adhesive, pressure-sensitive, 2-inch wide roll.

**(3)** Cord, nylon, Type III, 550-pound breaking strength.

**(4)** Webbing, cotton, 1/4-inch, 80-pound breaking strength.

**(5)** Tie-down strap CGU-1/B.

**c. Personnel.** Two persons can prepare and rig this load in 20 minutes.

**d. Procedures.** The following procedures apply to this load:

**(1) Preparation.** Prepare the load using the following steps:

**(a)** Position the containers side by side with the doors facing the same direction.

**(b)** Close and secure the doors by routing CGU-1/Bs around the entire container.

**(2) Rigging.** Rig the load according to the steps in Figure 21-2.

**(3) Hookup.** The hookup team stands on top of the containers. The static wand person discharges the static electricity with the static wand. The hookup person places the apex fitting onto the aircraft cargo hook. The hookup team then moves clear of the load but remains close to the load as the helicopter removes slack from the sling legs. When successful hookup is assured, the hookup team quickly exits the area underneath the helicopter to the designated rendezvous point.

**(4) Derigging.** Derigging is the reverse of the preparation and rigging procedures in steps d (1) and d (2).

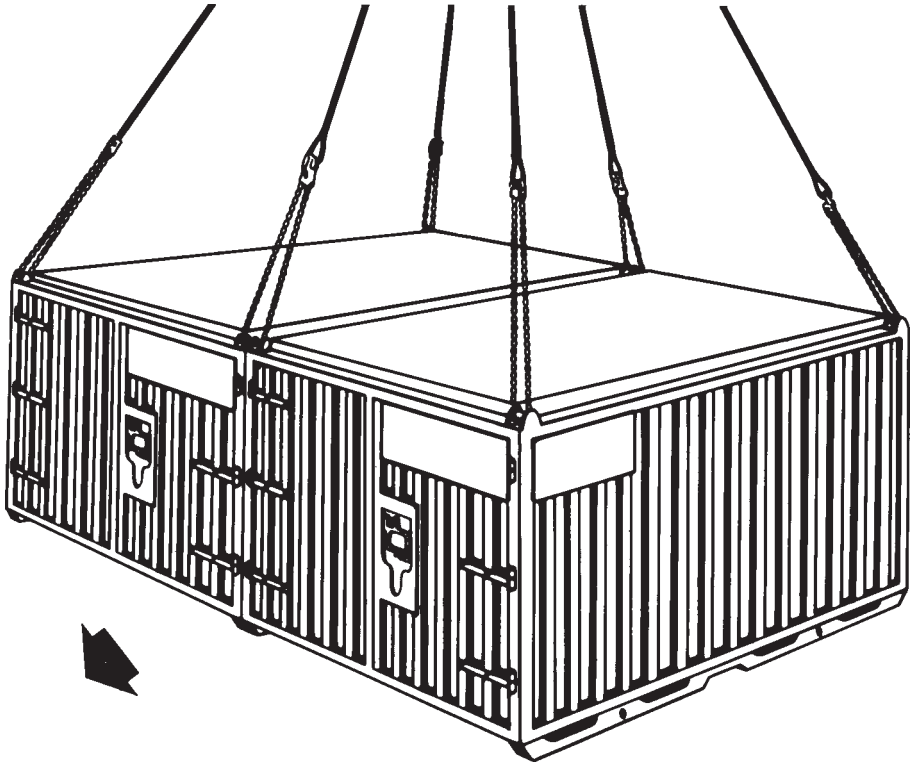

**RIGGING STEPS**

**1.** Configure a six-leg sling set by adding the two additional sling legs to the sling set.

**2.** Position apex fitting on top of the containers. Route outer sling legs 1 and 2 to the front (door end) of the containers, middle sling legs 3 and 4 to the rear, and inner sling legs 5 and 6 to the center of the containers. Sling legs 1, 3, and 5 must be on the left side of the load.

**3.** Loop the chain end of sling leg 1 through the left front lift provision of the left container. Place the correct link from Table 21-2 in the grab hook. Repeat with sling leg 2 and the right front lift provision.

**4.** Loop the chain end of sling leg 3 through the left rear lift provision on the left container. Place the correct link from Table 21-2 in the grab hook. Repeat with sling leg 4 and the right rear lift provision.

**5.** Loop the chain end of sling leg 5 through the front inboard lift provision of both containers. Place the correct link from Table 21-2 in the grab hook. Repeat with sling leg 6 and the rear inboard lift provisions. Secure the excess chain with Type III nylon cord.

**6.** Cluster and tie or tape (breakaway technique) all sling legs together on top of the containers to prevent entanglement during hookup and lift-off.

***Figure 21-2. Two CONEX Containers***

# CHAPTER 22

# SUITABLE SINGLE-POINT RIGGING PROCEDURES FOR RADAR EQUIPMENT

## 22-1. Introduction

This chapter contains rigging procedures for single-point lift of radar equipment that is suitable for sling load. Each rigging procedure is found in a paragraph that includes a description of the load, materials required for rigging, and steps to complete the procedure. An applicability paragraph is also a part of each paragraph and identifies the suitable loads. The suitable single-point rigging procedures for radar equipment is in this section.

Paragraph 22-2 gives detailed instructions for rigging the load.

**NOTE: Reach Pendants may be used on all single point loads. A static discharge person is not required when using a Reach Pendant.**

## 22-2. AN/MPQ-4A Radar Set

**a. Applicability.** The following items in Table 22-1 are suitable for sling load by all **ARMY** helicopters with suitable lift capacity:

**Table 22-1. AN/MPQ-4A Radar Set**

| NOMENCLATURE | MAX WEIGHT (POUNDS) | SLING SET | LINK COUNT FRONT/REAR | RECOMMENDED AIRSPEED (KNOTS) |
|---|---|---|---|---|
| Radar Set, Trailer-Mounted, AN/MPQ-4A without 55-Gallon Drum of Fuel | 6,290 | 10K | 3/55 | 80 |
| Radar Set, Trailer-Mounted, AN/MPQ-4A with 55-Gallon Drum of Fuel | 6,690 | 10K | 3/55 | 80 |

**b. Materials.** The following materials are required to rig this load:

**(1)** Sling set (10,000-pound capacity).

**(2)** Tape, adhesive, pressure-sensitive, 2-inch wide roll.

**(3)** Cord, nylon, Type III, 550-pound breaking strength.

**(4)** Webbing, cotton, 1/4-inch, 80-pound breaking strength.

**(5)** Webbing, nylon, tubular, 1/2-inch.

**(6)** Padding, felt, 1/2- x 24- x 60-inch (2 sheets), 1/2- x 30- x 36 (1 sheet).

**c. Personnel.** Two persons can prepare and rig this load in 30 minutes.

**d. Procedures.** The following procedures apply to this load:

**(1) Preparation.** Prepare the load using the following steps:

**(a)** Place the radar set in the travel mode. Secure the safety chains and the air hoses to the trailer tongue with tape or Type III nylon cord.

**(b)** Secure the handles of the rear outriggers and all pins with tape.

**(c)** Place a 24- x 48-inch sheet of felt padding over the receiver-transmission group and secure with tape.

**(d)** Place two sheets of felt side by side on top of the reflector, tape the centerline, and secure in place with Type III nylon cord routed from one step over the receiver-transmission group and reflector to the other step.

**(e)** Secure the fuel drum with 1/2-inch tubular nylon to the step.

**(2) Rigging.** Rig the load according to the steps in Figure 22-1.

**(3) Hookup.** The hookup team stands on the trailer fenders. The static wand person discharges the static electricity with the static wand. The hookup person places the apex fitting onto the aircraft cargo hook. The hookup team then moves clear of the load but remains close to the load as the helicopter removes slack from the sling legs. When successful hookup is assured, the hookup team quickly exits the area underneath the helicopter to the designated rendezvous point.

**(4) Derigging.** Derigging is the reverse of the preparation and rigging procedures in steps d (1) and d (2).

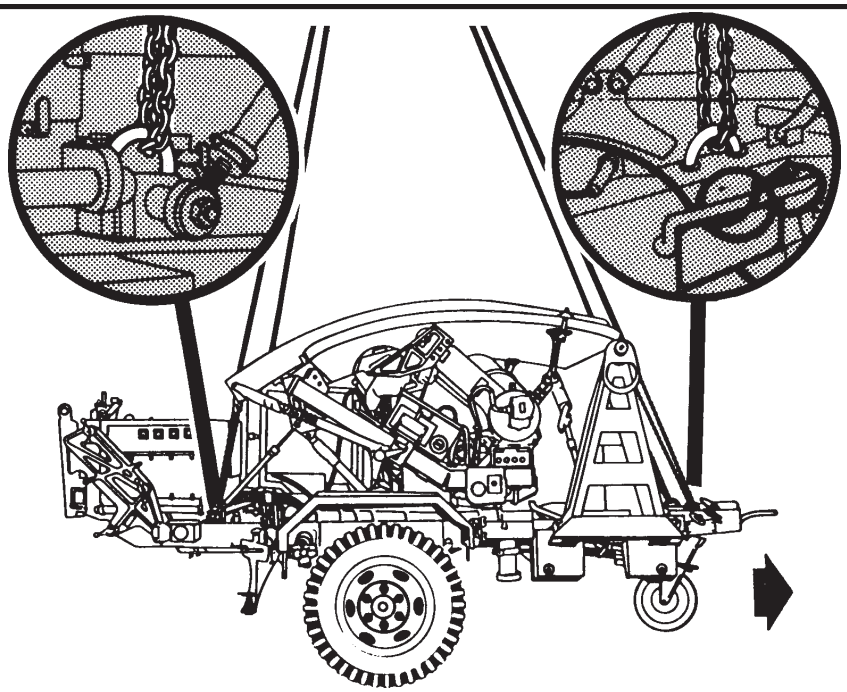

**RIGGING STEPS**

**1.** Position apex fitting on top of the reflector. Route outer sling legs 1 and 2 to the front (tongue end) of the load and inner sling legs 3 and 4 to the rear. Sling legs 1 and 3 must be on the left side of the load.

**2.** Loop the chain end of sling leg 1 through the left front lift provision located on the tongue. Place the correct link from Table 22-1 in the grab hook. Repeat with sling leg 2 and the right front lift provision. If a fuel drum is being moved, route sling legs 1 and 2 through the lunette instead of the lift provisions.

**3.** Loop the chain end of sling leg 3 through the left rear lift provision located aft of the receiver-transmission group. Place the correct link from Table 22-1 in the grab hook. Repeat with sling leg 4 and the right rear lift provision.

**4.** Cluster and tie or tape (breakaway technique) all sling legs together to prevent entanglement during hookup and lift-off.

*Figure 22-1. AN/MPQ-4A Radar Set*

# CHAPTER 23

# SUITABLE SINGLE-POINT RIGGING PROCEDURES FOR GENERATOR SETS

## 23-1. Introduction

This chapter contains rigging procedures for single-point lift of generator sets that are suitable for sling load. Each rigging procedure is found in a paragraph that includes a description of the load, materials required for rigging, and steps to complete the procedure. An applicability paragraph is also a part of each paragraph and identifies the suitable loads. The suitable single-point rigging procedures for generator sets are in this section.

Paragraphs 23-2 and 23-3 give detailed instructions for rigging loads.

**NOTE: Reach Pendants may be used on all single point loads. A static discharge person is not required when using a Reach Pendant.**

## 23-2. Trailer Mounted Generators

**a. Applicability.** The following items in Table 23-1 are suitable for sling load by all **ARMY** helicopters with suitable lift capacity:

**Table 23-1. Trailer Mounted Generators**

| NOMENCLATURE | MAX WEIGHT (POUNDS) | SLING SET | LINK COUNT FRONT/REAR | RECOMMENDED AIRSPEED (KNOTS) |
|---|---|---|---|---|
| Generator Set, 5KW, PU-620/M Mounted on M116 Trailer | 2,840 | 10K | 3/50 | 85 |
| Generator Set, 10KW, PU-619 Mounted on M105 Trailer | 3,530 | 10K | 30/30 | 120 |
| Generator Set, 10KW, PU-304 Mounted on M105 Trailer | 4,110 | 10K | 40/50 | 100 |

**NOTE: The PU-619/M generator set mounted on the M105 trailer is NOT CURRENTLY APPROVED FOR LIFT WITH THE ORIGINAL LIFT PROVISIONS.**

**b. Materials.** The following materials are required to rig this load:

**(1)** Sling set (10,000-pound capacity).

**(2)** Tape, adhesive, pressure-sensitive, 2-inch wide roll.

**(3)** Cord, nylon, Type III, 550-pound breaking strength.

**(4)** Webbing, cotton, 1/4-inch, 80-pound breaking strength.

**c. Personnel.** Two persons can prepare and rig this load in 15 minutes.

**d. Procedures.** The following procedures apply to this load:

**(1) Preparation.** Prepare the load using the following steps:

**(a)** Remove the canvas cover and secure on top of the generator with Type III nylon cord.

**(b)** Secure the 5-gallon gas cans with Type III nylon cord.

**(c)** Engage the parking brakes.

**(d)** Secure the safety chains, air hoses, and intervehicular cable to the tongue with tape or Type III nylon cord.

**(e)** Inspect the lift provisions for cracks in the welds.

**(2) Rigging.** Rig the load according to the steps in Figure 23-1.

**(3) Hookup.** The hookup team stands on the trailer. The static wand person discharges the static electricity with the static wand. The hookup person places the apex fitting onto the aircraft cargo hook. The hookup team then moves clear of the load but remains close to the load as the helicopter removes slack from the sling legs. When successful hookup is assured, the hookup team quickly exits the area underneath the helicopter to the designated rendezvous point.

**(4) Derigging.** Derigging is the reverse of the preparation and rigging procedures in steps d (1) and d (2).

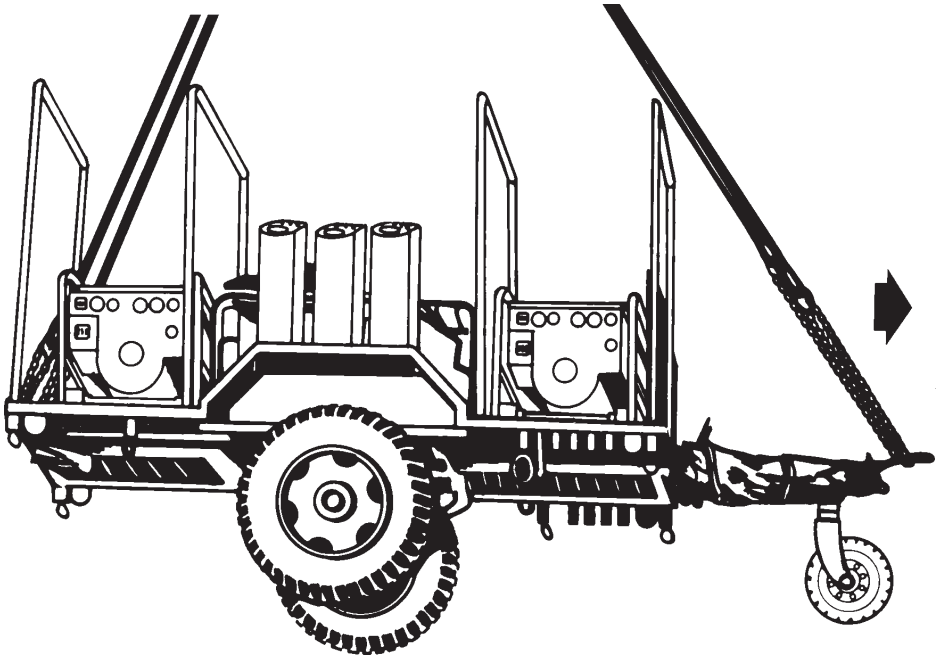

**RIGGING STEPS**

**1.** Position apex fitting on top of the trailer. Route outer sling legs 1 and 2 to the front of the load in front of bow 1 and inner sling legs 3 and 4 to the rear between bows 3 and 4. Sling legs 1 and 3 must be on the left side of the load.

**2.** Loop the chain end of sling leg 1 through the lunette. Place the correct link from Table 23-1 in the grab hook. Repeat with sling leg 2. Secure the excess chain with Type III nylon cord.

**3.** Loop the chain end of sling leg 3 through the left rear lift provision. Place the correct link from Table 23-1 in the grab hook. Repeat with sling leg 4 and the right rear lift provision. Secure the excess chain with Type III nylon cord.

**4.** Cluster and tie or tape (breakaway technique) all sling legs together to prevent entanglement during hookup and lift-off.

*Figure 23-1. Trailer Mounted Generators*

## 23-3. 7.5KW Generator Set

**a. Applicability.** The following item in Table 23-2 is suitable for sling load by all **ARMY** helicopters with suitable lift capacity:

**Table 23-2. 7.5KW Generator Set**

| NOMENCLATURE | MAX WEIGHT (POUNDS) | SLING SET | LINK COUNT FRONT/REAR | RECOMMENDED AIRSPEED (KNOTS) |
|---|---|---|---|---|
| Generator Set, Wheel Mounted, 7.5KW | 810 | 10K OR 5K Net | 3 | 80 |

**b. Materials.** The following materials are required to rig this load:

**(1)** One sling leg from a 10,000-pound capacity sling set with apex fitting.

**OR**

**(2)** Net, cargo (5,000-pound capacity).

**(3)** Tape, adhesive, pressure-sensitive, 2-inch wide roll.

**(3)** Cord, nylon, Type III, 550-pound breaking strength.

**(4)** Webbing, cotton, 1/4-inch, 80-pound breaking strength.

**c. Personnel.** One person can prepare and rig this load in 5 minutes.

**d. Procedures.** The following procedures apply to this load:

**(1) Preparation.** Prepare the load using the following steps:

**(a)** Tie the tow bar in the raised position with Type III nylon cord.

**(b)** Secure the safety chains, air hoses, and intervehicular cable to the tongue with tape or Type III nylon cord.

**(2) Rigging.** Rig the load according to the steps in Figure 23-2.

**(3) Hookup.** The hookup team stands beside the generator. The static wand person discharges the static electricity with the static wand. The hookup person places the apex fitting onto the aircraft cargo hook. The hookup team then moves clear of the load but remains close to the load as the helicopter removes slack from the sling legs. When successful hookup is assured, the hookup team quickly exits the area underneath the helicopter to the designated rendezvous point.

**(4) Derigging.** Derigging is the reverse of the preparation and rigging procedures in steps d (1) and d (2).

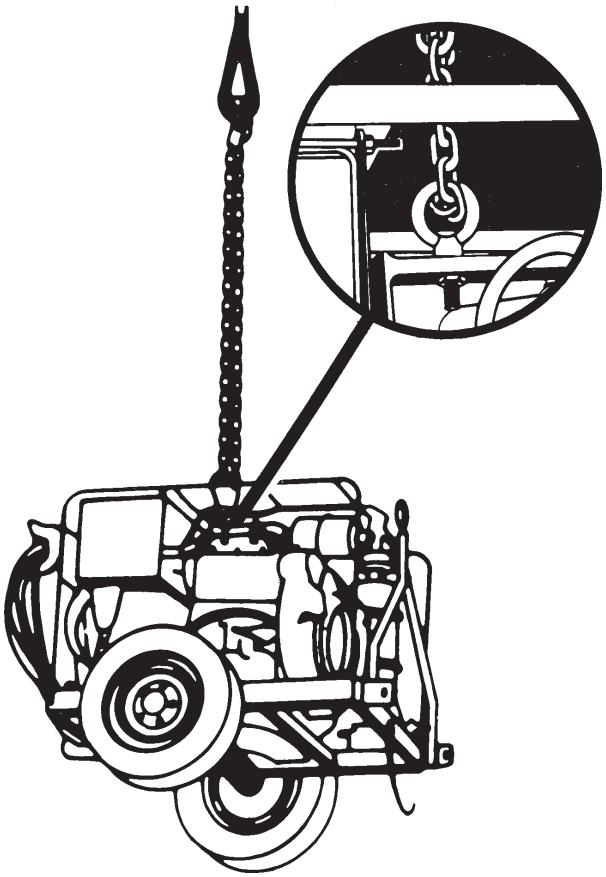

| RIGGING STEPS FOR SLING LEG | RIGGING STEPS FOR CARGO NET |
|---|---|
| **1.** Position apex fitting beside the generator set.<br><br>**2.** Loop the chain end of the sling leg through the lift provision located on top of the generator. Place the correct link from Table 23-2 in the grab hook. Repeat with sling leg 2. Secure the excess chain with Type III nylon cord.<br><br>**3.** Tape the sling leg to the upper frame to prevent entanglement during hookup and lift-off. | **1.** Spread the net out flat on the ground. Center the generator on the net.<br><br>**2.** Close and rig the net in accordance with FM 10-450-3. |

*Figure 23-2. 7.5KW Generator Set*

# CHAPTER 24

# SUITABLE SINGLE-POINT RIGGING PROCEDURES FOR MISCELLANEOUS EQUIPMENT

## 24-1. Introduction

This chapter contains rigging procedures for single-point lift of miscellaneous equipment that is suitable for sling load. Each rigging procedure is found in a paragraph that includes a description of the load, materials required for rigging, and steps to complete the procedure. An applicability paragraph is also a part of each paragraph and identifies the suitable loads. The suitable single-point rigging procedures for miscellaneous equipment are in this section.

Paragraphs 24-2 through 24-6 give detailed instructions for rigging loads.

**NOTE: Reach Pendants may be used on all single point loads. A static discharge person is not required when using a Reach Pendant.**

## 24-2. Company Level Field Feeding Kit

**a. Applicability.** The following items in Table 24-1 are suitable for sling load by all **ARMY** helicopters with suitable lift capacity:

**Table 24-1. Company Level Field Feeding Kit**

| NOMENCLATURE | MAX WEIGHT (POUNDS) | SLING SET | LINK COUNT FRONT/REAR | RECOMMENDED AIRSPEED (KNOTS) |
|---|---|---|---|---|
| Company Level Field Feeding Kit with 8 Cases of T-Rations and Fuel/Water Containers at 75% full | 950 | A-22 Cargo Bag with one 10K sling leg | 3 | 80 |

**b. Materials.** The following materials are required to rig this load:

**(1)** One sling leg from a 10,000-pound capacity sling set.

**(2)** Bag, cargo, A-22.

**(3)** Tape, adhesive, pressure-sensitive, 2-inch wide roll.

**(3)** Cord, nylon, Type III, 550-pound breaking strength.

**(4)** Webbing, cotton, 1/4-inch, 80-pound breaking strength.

**(6)** Skid board, plywood (53 1/2- x 48- x 3/4-inch)

**(7)** Padding, felt or suitable substitute.

**(8)** Webbing, nylon, tubular, 1/2-inch, 1000-pound breaking strength..

**c. Personnel.** Two persons can prepare and rig this load in 30 minutes.

**d. Procedures.** The following procedures apply to this load:

**(1) Preparation.** Prepare the load using the following steps:

**(a)** Drill a 3/4-inch hole along the edge of the plywood skid 8 inches from each corner.

**(b)** Thread an 8-foot length of 1/2-inch tubular nylon through the holes in each corner from bottom to top. This webbing is used to tie the skid board to the A-22 cargo bag suspension sling.

**(c)** Position the A-22 cargo bag and cover on top of the skid board. While facing the long side of the skid board, place the heater cabinet with its burner unit in the near left corner, set in about 1/2-inch from either side. Secure the burner to the cabinet frame with Type III nylon cord.

**(d)** Place the water jugs, toolbox, fire extinguisher, cutting board, tray pack opener, and water sterilizing bag in the heater cabinet. Pad as necessary and close and secure the cover.

**(e)** Moving counterclockwise, place the stacked pot assembly, including pots and burner, next to the heater cabinet. The burner should be parallel to the long side of the plywood. Place the extra pot cover on the burner before stacking the pot cradle on the stand. Pad between the heater cabinet and pot assembly. Secure the components of the pot assembly together with Type III nylon cord.

**(f)** Moving counterclockwise, place the two large food transporters in the next corner. The long side should be flush with the long side of the skid board. Place two boxes of T-rations in each transporter.

**(g)** Place the two gas cans (not stacked) between the food transporters and the pot assembly.

**(h)** Pad the lantern and place it on top of the gas cans.

**(i)** Stack the four beverage transporters with the two tall containers on top in the last corner.

**(j)** Stack the four boxes of T-rations between the food transporters and the beverage transporters.

**(k)** Place the table across the heater cabinet and the pot assembly. Level the table with blocks of wood or scrap honeycomb.

**(2) Rigging.** Rig the load according to the steps in Figure 24-1.

**(3) Hookup.** The hookup team stands beside the A-22 cargo bag. The static wand person discharges the static electricity with the static wand. The hookup person places the apex fitting onto the aircraft cargo hook. The hookup team then moves clear of the load but remains close to the load as the helicopter removes slack from the sling legs. When successful hookup is assured, the hookup team quickly exits the area underneath the helicopter to the designated rendezvous point.

**(4) Derigging.** Derigging is the reverse of the preparation and rigging procedures in steps d (1) and d (2).

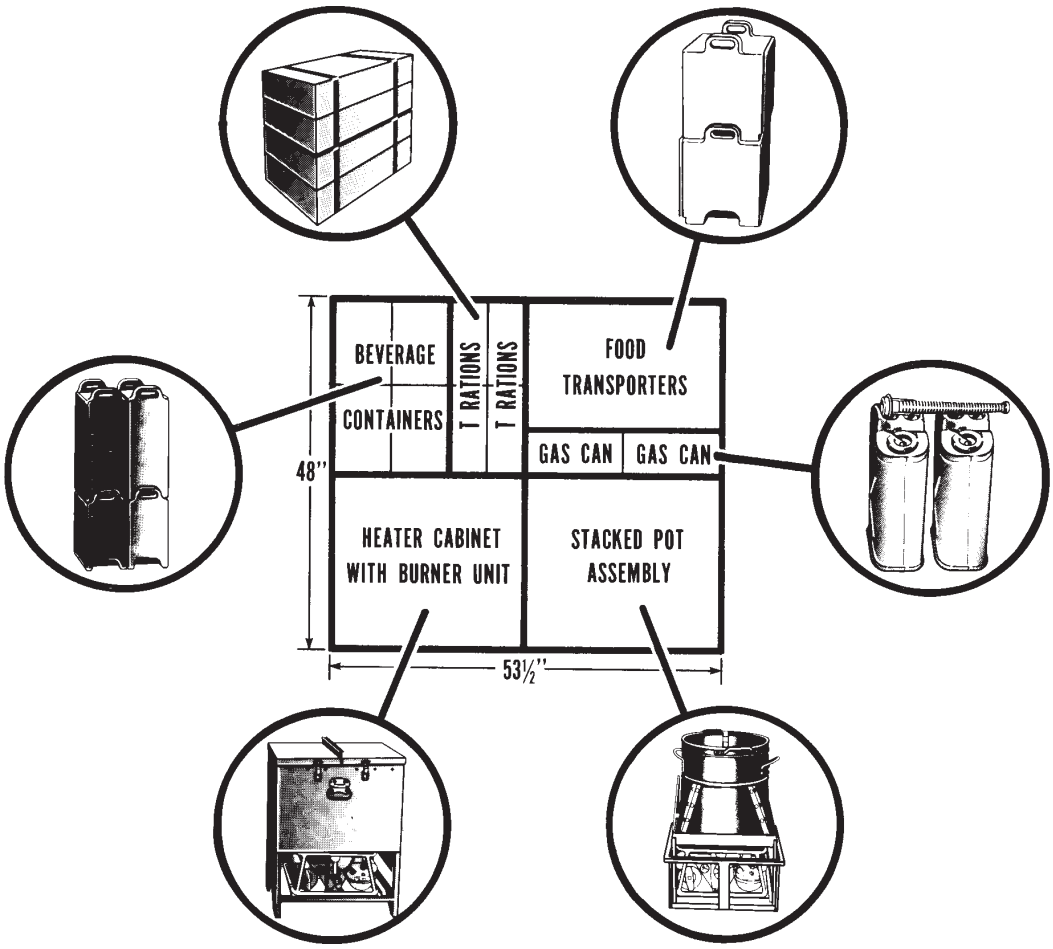


**RIGGING STEPS**

**1.** Close and secure the A-22 cargo bag in accordance with the procedures in FM 10-450-3.

**2.** Route the chain end of the 10,000-pound capacity through the suspension clevis of the A-22 cargo bag. Place the correct link from Table 24-1 in the grab hook

*Figure 24-1. Company Level Field Feeding Kit*

## 24-3. 350-GPM Pump Assembly

**a. Applicability.** The following item in Table 24-2 is suitable for sling load by all **ARMY** helicopters with suitable lift capacity:

**Table 24-2. 350-GPM Pump Assembly**

| NOMENCLATURE | MAX WEIGHT (POUNDS) | SLING SET | LINK COUNT FRONT/REAR | RECOMMENDED AIRSPEED (KNOTS) |
|---|---|---|---|---|
| Pump Assembly, 350-GPM | 1,165 | 10K | 50/50 | 60 |

**b. Materials.** The following materials are required to rig this load:

**(1)** Sling set (10,000-pound capacity).

**(2)** Tape, adhesive, pressure-sensitive, 2-inch wide roll.

**(3)** Cord, nylon, Type III, 550-pound breaking strength.

**(4)** Webbing, cotton, 1/4-inch, 80-pound breaking strength.

**c. Personnel.** Two persons can prepare and rig this load in 10 minutes.

**d. Procedures.** The following procedures apply to this load:

**(1) Preparation.** Prepare the load using the following steps:

**(a)** Secure the engine cover and any other loose equipment with Type III nylon cord.

**(b)** Slide the tow bar all the way in and secure with safety pins.

**(2) Rigging.** Rig the load according to the steps in Figure 24-2.

**(3) Hookup.** The hookup team stands beside the pump. The static wand person discharges the static electricity with the static wand. The hookup person places the apex fitting onto the aircraft cargo hook. The hookup team then moves clear of the load but remains close to the load as the helicopter removes slack from the sling legs. When successful hookup is assured, the hookup team quickly exits the area underneath the helicopter to the designated rendezvous point.

**(4) Derigging.** Derigging is the reverse of the preparation and rigging procedures in steps d (1) and d (2).

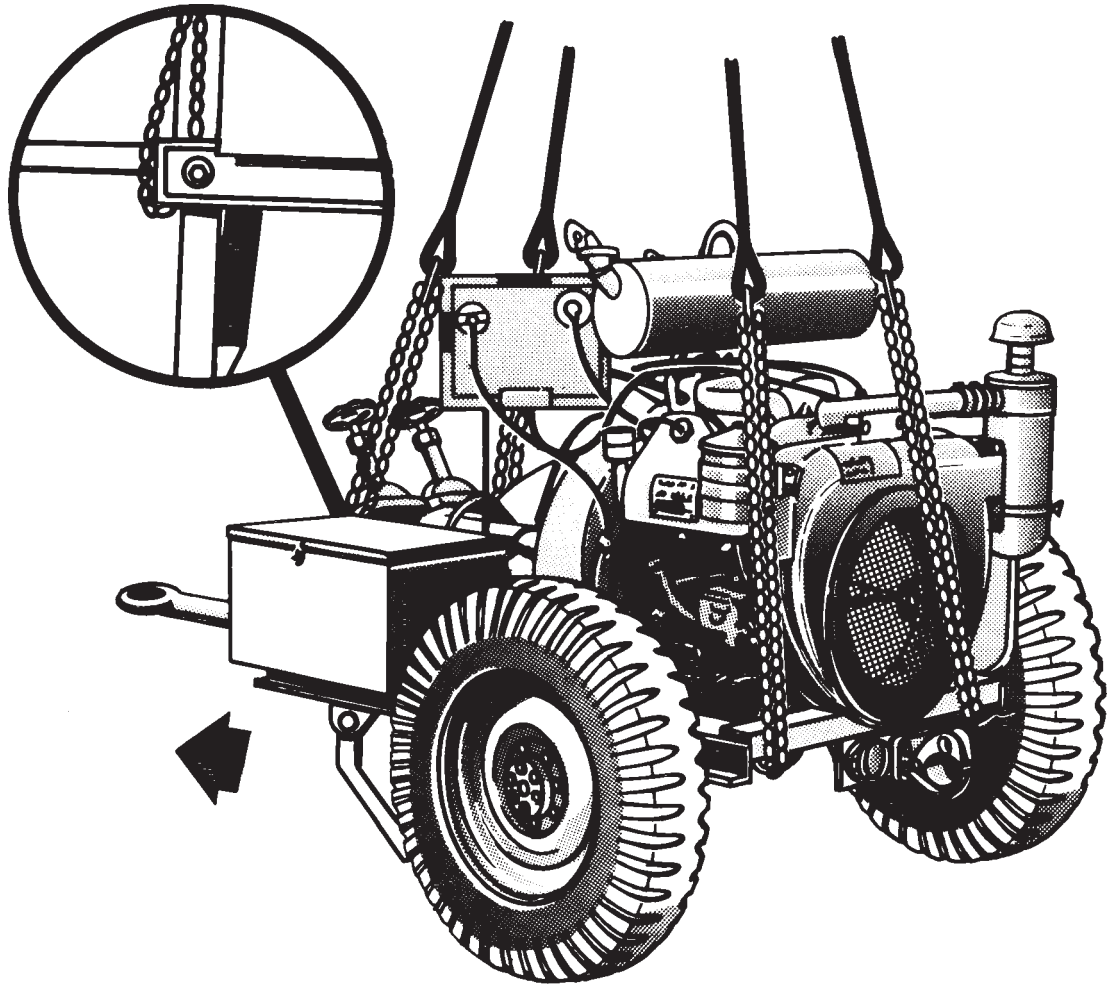

**RIGGING STEPS**

**1.** Position apex fitting on top of the pump. Route outer sling legs 1 and 2 to the front of the load and inner sling legs 3 and 4 to the rear. Sling legs 1 and 3 must be on the left side of the load.

**2.** Loop the chain end of sling leg 1 around the left front corner of the frame and through the rings on the bottom of the frame. Place the correct link from Table 24-2 in the grab hook. Repeat with sling leg 2 and the right front corner of the frame. Secure the excess chain with Type III nylon cord.

**3.** Loop the chain end of sling leg 3 around the left rear corner of the frame and through the rings on the bottom of the frame. Place the correct link from Table 24-2 in the grab hook. Repeat with sling leg 4 and the right rear corner of the frame. Secure the excess chain with Type III nylon cord.

**4.** Pull each grab hook up and tie to the top corner of the load. Cluster and tie or tape (breakaway technique) all sling legs together to prevent entanglement during hookup and lift-off.

*Figure 24-2. 350 GPM Pump Assembly*

## 24-4. Light Tactical Floating Raft Bridge

**a. Applicability.** The following items in Table 24-3 are suitable for sling load by all **ARMY** helicopters with suitable lift capacity:

**Table 24-3. Light Tactical Floating Raft Bridge**

| NOMENCLATURE | MAX WEIGHT (POUNDS) | SLING SET | LINK COUNT FRONT/REAR | RECOMMENDED AIRSPEED (KNOTS) |
|---|---|---|---|---|
| M796, 4-Ton Bolster Trailer with Eight Half-Pontoons and Cradle | 10,620 | 25K | 3/13 | 80 |
| Eight Half-Pontoons and Cradle | 6,000 | 10K | 3/3 | 80 |
| LTR Superstructure, Light Bundle | 5,250 | 10K | 3/3 | 80 |
| LTR Superstructure, Medium Bundle | 7,000 | 10K | 3/3 | 80 |
| LTR Superstructure, Heavy Bundle | 10,000 | 25K | 3/3 | 80 |
| Two Motors and Mounting Brackets | 1,290 | 5K Cargo Net | N/A | 80 |

**b. Materials.** The following materials are required to rig this load:

**(1) Bolster trailer with pontoons and cradle:**

**(a)** Sling set (25,000-pound capacity).

**(b)** Tie-down assemblies (10,000-pound capacity) (6 each).

**(c)** Tie-down strap, cargo, CGU-1/B (as required)

**(d)** Webbing, cotton, 1/4-inch.

**(e)** Tape, adhesive, pressure-sensitive, 2-inch wide roll.

**(f)** Cord, nylon, Type III.

**(2) Pontoons and cradle:**

**(a)** Sling set (10,000-pound capacity).

**(b)** Tape, adhesive, pressure-sensitive, 2-inch wide roll.

**(c)** Cord, nylon, Type III.

**(d)** Webbing, cotton, 1/4-inch.

**(3) LTR (light bundle).**

**(a)** Sling set (10,000-pound capacity).

**(b)** Tape, adhesive, pressure-sensitive, 2-inch wide roll.

**(c)** Cord, nylon, Type III.

**(d)** Webbing, cotton, 1/4-inch.

**(e)** Webbing, nylon, tubular, 1/2-inch.

**(f)** Panel, deck (4 each).

**(g)** Panel, filler, deck (8 each).

**(h)** Panel, filler, short deck (6 each).

**(i)** Panel, end, ramp (2 each).

**(j)** Assembly, articulating (2 each).

**(k)** Curb, normal (4 each).

**(l)** Curb, short (6 each).

**(m)** Cable, 5/8-inch, 26-feet long (2 each).

**(n)** Clamp, cable, 5/8-inch (8 each).

**(o)** Turnbuckle, 5/8- x 24-inch (2 each).

**(4) LTR (medium bundle).**

**(a)** Sling set (10,000-pound capacity).

**(b)** Tape, adhesive, pressure-sensitive, 2-inch wide roll.

**(c)** Cord, nylon, Type III.

**(d)** Webbing, cotton, 1/4-inch.

**(e)** Webbing, nylon, tubular, 1/2-inch.

**(f)** Panel, deck (6 each).

**(g)** Panel, filler, deck (6 each).

**(h)** Panel, filler, short deck (2 each).

**(i)** Panel, end, ramp (4 each).

**(j)** Curb, normal (6 each).

**(k)** Curb, short (4 each).

**(l)** Cable, 5/8-inch, 26-feet long (2 each).

**(m)** Clamp, cable, 5/8-inch (8 each).

**(n)** Turnbuckle, 5/8- x 24-inch (2 each).

**(5) LTR (heavy bundle).**

**(a)** Sling set (25,000-pound capacity).

**(b)** Tape, adhesive, pressure-sensitive, 2-inch wide roll.

**(c)** Cord, nylon, Type III.

**(d)** Webbing, cotton, 1/4-inch.

**(e)** Webbing, nylon, tubular, 1/2-inch.

**(f)** Panel, deck (8 each).

**(g)** Panel, filler, deck (16 each).

**(h)** Panel, filler, short deck (12 each).

**(i)** Panel, end, ramp (4 each).

**(j)** Curb, normal (8 each).

**(k)** Curb, short (12 each).

**(l)** Cable, 5/8-inch, 40-feet long (2 each).

**(m)** Clamp, cable, 5/8-inch (8 each).

**(n)** Turnbuckle, 5/8- x 24-inch (2 each).

**(o)** Assembly, articulating (4 each).

**(6) Two motors and mounting brackets:**

**(a)** Net, cargo (5,000-pound capacity).

**(b)** Tape, adhesive, pressure-sensitive, 2-inch wide roll.

**(c)** Cord, nylon, Type III.

**(d)** Webbing, cotton, 1/4-inch.

**(e)** Webbing, nylon, tubular, 1/2-inch.

**c. Personnel.** Eleven persons can prepare and rig these loads in the following time:

**(1)** Bolster trailer with pontoons and cradle, 30 minutes.

**(2)** Pontoons and cradle, 20 minutes.

**(3)** LTR (light bundle), 20 minutes.

**(4)** LTR (medium bundle), 25 minutes.

**(5)** LTR (heavy bundle), 30 minutes.

**(6)** Two motors and mounting brackets, 10 minutes.

**d. Procedures.** The following procedures apply to these loads:

**(1) Preparation.** Prepare the loads using the following steps:

**(a) Bolster trailer with pontoons and cradle:**

**1.** Secure the pontoons on the cradle and trailer according to the operator's manual.

**2.** Secure both sides of the cradle to the trailer with tie-downs.

**3.** Under the bottom pontoon and on top of the cradle, secure the cradle to the trailer by wrapping one tie-down strap

around the cradle and trailer frame at each side of the load in the vicinity of the rear wheels. Repeat this procedure at the forward wheels.

**(b) Pontoons and cradle:** Secure the pontoons to the cradle according to the operator's manual.

**(c) LTR superstructure (light bundle):**

**1.** Place two timbers on the ground as shoring approximately 6 feet apart.

**2.** Lay both cables on the ground parallel to and on the outside of the timbers.

**3.** Stack the four deck panels on the timbers. Face the deckplates of the bottom and third panels down and the second and top panels up. All male ends must be in the same direction.

**4.** Connect the two articulating assemblies and place them on top of the stack of deck panels.

**5.** Place two end ramp panels, butt end to butt end, on top of the articulating assemblies.

**6.** Place six deck filler panels in the space between the bottom and second deck panels.

**7.** Place remaining two deck filler panels, six short deck filler panels, and six short curbs in the space between the third and top deck panels.

**8.** Place the four normal curbs in the space between the top deck panel and the articulating assemblies.

**9.** Close off the ends of the deck panels and articulating assemblies by lacing 1/2-inch tubular nylon webbing across the ends of the stack.

**10.** Bring cables up over load, route each end through the turnbuckle, secure each end with two cable clamps, and tighten turnbuckle.

**CAUTION**
**Do not over tighten the cables as damage to the load will occur.**

**11.** Tie the two cables together with 1/2-inch tubular nylon webbing.

**(d) LTR superstructure (medium bundle):**

**1.** Place two timbers on the ground as shoring approximately 6 feet apart.

**2.** Lay both cables on the ground parallel to and on the outside of the timbers.

**3.** Stack two parallel sets of deck panels, three panels high, with male ends facing in same direction.

**4.** Place two end ramp panels, butt end to butt end, on top of each stack of deck panels.

**5.** Place deck filler panels between deck panels.

**6.** Close off ends of deck panels by lacing 1/2-inch tubular nylon webbing across ends of stacks.

**7.** Place three normal curbs on each side of load, alternating short curbs in between the normal curbs.

**8.** Bring cables up over load, route each end through turnbuckle, secure each end with two cable clamps, and tighten turnbuckle.

**CAUTION**
**Do not over tighten the cables as damage to the load will occur.**

**9.** Tie each short curb to the turnbuckle with nylon webbing.

**10.** Tie the two cables together with 1/2-inch tubular nylon webbing.

**(e) LTR superstructure (heavy bundle):**

**1.** Place two timbers on the ground as shoring approximately 6 feet apart.

**2.** Lay both cables on the ground parallel to and on the outside of the timbers.

**3.** Configure two light bundle stacks side-by-side and secure each end of the load with cables.

**(2) Rigging.** Rig the load according to the steps in Figure 24-3.

**(3) Hookup.** The hookup team stands on top of the pontoons, on top of the superstructure bundles, or alongside the cargo net, depending on the load. The static wand person discharges the static electricity with the static wand. The hookup person places the apex fitting onto the aircraft cargo hook. The hookup team then moves clear of the load but remains close to the load as the helicopter removes slack from the sling legs. When successful hookup is assured, the hookup team quickly exits the area underneath the helicopter to the designated rendezvous point.

**(4) Derigging.** Derigging is the reverse of the preparation and rigging procedures in steps d (1) and d (2).

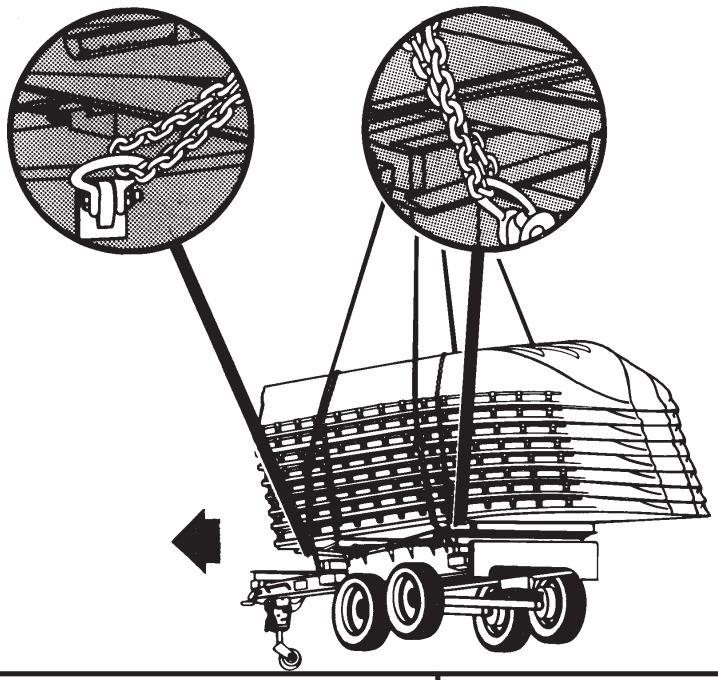

| RIGGING STEPS-BOLSTER TRAILER | RIGGING STEPS CRADLE AND PONTOONS ONLY |
|---|---|
| **1.** Position apex fitting on top of the pontoons. Route outer sling legs 1 and 2 to the front of the trailer and inner sling legs 3 and 4 to the rear. Sling legs 1 and 3 must be on the left side of the load. | **1.** Position apex fitting on top of the pontoons. Route outer sling legs 1 and 2 to the front of the trailer and inner sling legs 3 and 4 to the rear. Sling legs 1 and 3 must be on the left side of the load. |
| **2.** Loop the chain end of sling leg 1 through the left front lift provision mounted on the left front corner of the frame. Place the correct link from Table 24-3 in the grab hook. Repeat with sling leg 2 and the right front corner of the trailer. | **2.** Loop the chain end of sling leg 1 through the left front lift provision located on the cross beam of the cradle. Place the correct link from Table 24-3 in the grab hook. Repeat with sling leg 2 and the right front lift provision. |
| **3.** Loop the chain end of sling leg 3 through the left rear lift provision mounted on the left rear corner of the trailer. Place the correct link from Table 24-3 in the grab hook. Repeat with sling leg 4 and the right rear corner of the trailer. Secure the excess chain with Type III nylon cord. | **3.** Loop the chain end of sling leg 3 through the left rear lift provision located on the cross beam of the cradle. Place the correct link from Table 24-3 in the grab hook. Repeat with sling leg 4 and the right rear lift provision. |
| **4.** Pull each grab hook up and tie to one of the boat rails with 1/4-inch cotton webbing. Cluster and tie or tape (breakaway technique) all sling legs together to prevent entanglement during hookup and lift-off. | **4.** Pull each grab hook up and tie to one of the boat rails with 1/4-inch cotton webbing. Cluster and tie or tape (breakaway technique) all sling legs together to prevent entanglement during hookup and lift-off. |

*Figure 24-3. Light Tactical Floating Raft Bridge*

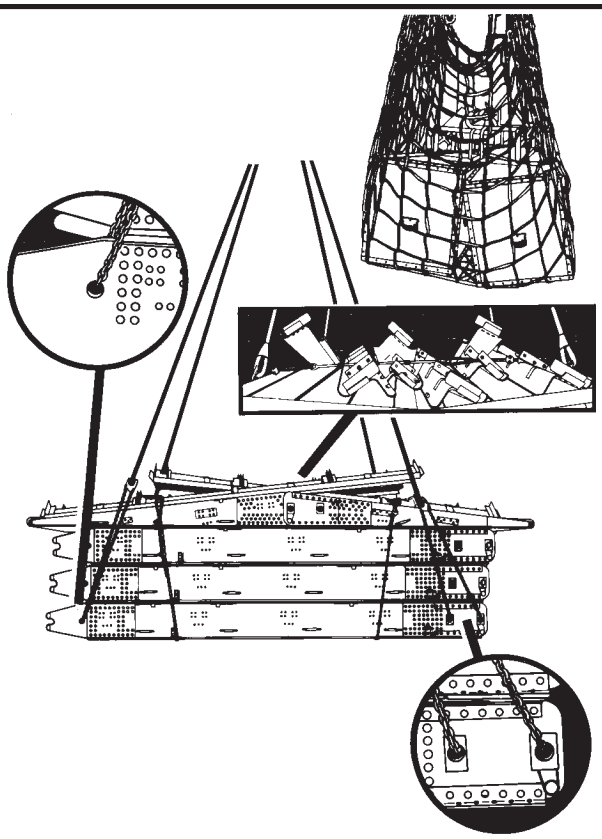

| RIGGING STEPS- LTR (LIGHT, MEDIUM, & HEAVY) | RIGGING STEPS- MOTORS & BRACKETS |
|---|---|
| **1.** Position apex fitting on top of the load. Route outer sling legs 1 and 2 to the female end of the deck panels and inner sling legs 3 and 4 to the male ends. Sling legs 1 and 3 must be on the left side of the load.<br><br>**2.** Loop the chain end of sling leg 1 through the inside hole and back out through the outside hole of the bottom deck panel. Place the correct link from Table 24-3 in the grab hook. Repeat with sling leg 2 on the opposite side of the load.<br><br>**3.** Loop the chain end of sling leg 3 through the hole at the male end of the bottom deck panel. Place the correct link from Table 24-3 in the grab hook. Repeat with sling leg 4 on the opposite side of the load.<br><br>**4.** Remove the safety pins and place them in the boat motor box or safety tie them with Type III nylon cord.<br><br>**5.** Cluster and tie or tape (breakaway technique) all sling legs together to prevent entanglement during hookup and lift-off. | **1.** Spread the 5,000-pound capacity cargo net on the ground.<br><br>**2.** Secure the motors, pins, paddles, and miscellaneous items in the containers. Secure the lid closed with Type III nylon cord.<br><br>**3.** Center the containers on the cargo net.<br><br>**4.** Place the mounting brackets on top of the containers.<br><br>**5.** Rig and close the cargo net in accordance with FM 10-450-3. |

*Figure 24-3. Light Tactical Floating Raft Bridge (continued)*

## 24-5. Medium-Span Bridge

**a. Applicability.** The following item in Table 24-4 is suitable for sling load by all **ARMY** helicopters with suitable lift capacity:

**Table 24-4. Medium-Span Bridge**

| NOMENCLATURE | MAX WEIGHT (POUNDS) | SLING SET | LINK COUNT FRONT/REAR | RECOMMENDED AIRSPEED (KNOTS) |
|---|---|---|---|---|
| Bridge Erection Set, Medium Girder Section | 13,800 | 25K | 5/5 | 60 |

**b. Materials.** The following materials are required to rig this load:

**(1)** Sling set (25,000-pound capacity).

**(2)** Multiloop line, Type XXVI nylon, 12-foot, 4-loop (4 each).

**(3)** Tape, adhesive, pressure-sensitive, 2-inch wide roll.

**(4)** Cord, nylon, Type III, 550-pound breaking strength.

**(5)** Webbing, cotton, 1/4-inch, 80-pound breaking strength.

**(6)** Padding, felt or suitable substitute.

**(7)** Clevis, large (4 each).

**(8)** Tie-down strap, cargo, CGU-1/B (as required).

**c. Personnel.** Six persons can prepare and rig this load in 30 minutes.

**d. Procedures.** The following procedures apply to this load:

**(1) Preparation.** Prepare the load using the following steps:

**(a)** Position the ramp sections on top of the bridge main structure. Secure with tie-down straps.

**(b)** Secure the four pieces of padding on the bottom side at each corner where the nylon straps are choker-hitched.

**(2) Rigging.** Rig the load according to the steps in Figure 24-4.

**(3) Hookup.** The hookup team stands on top of the bridge center. The static wand person discharges the static electricity with the static wand. The hookup person places the apex fitting onto the aircraft cargo hook. The hookup team then moves clear of the load but remains close to the load as the helicopter removes slack from the sling legs. When successful hookup is assured, the hookup team quickly exits the area underneath the helicopter to the designated rendezvous point.

**(4) Derigging.** Derigging is the reverse of the preparation and rigging procedures in steps d (1) and d (2).

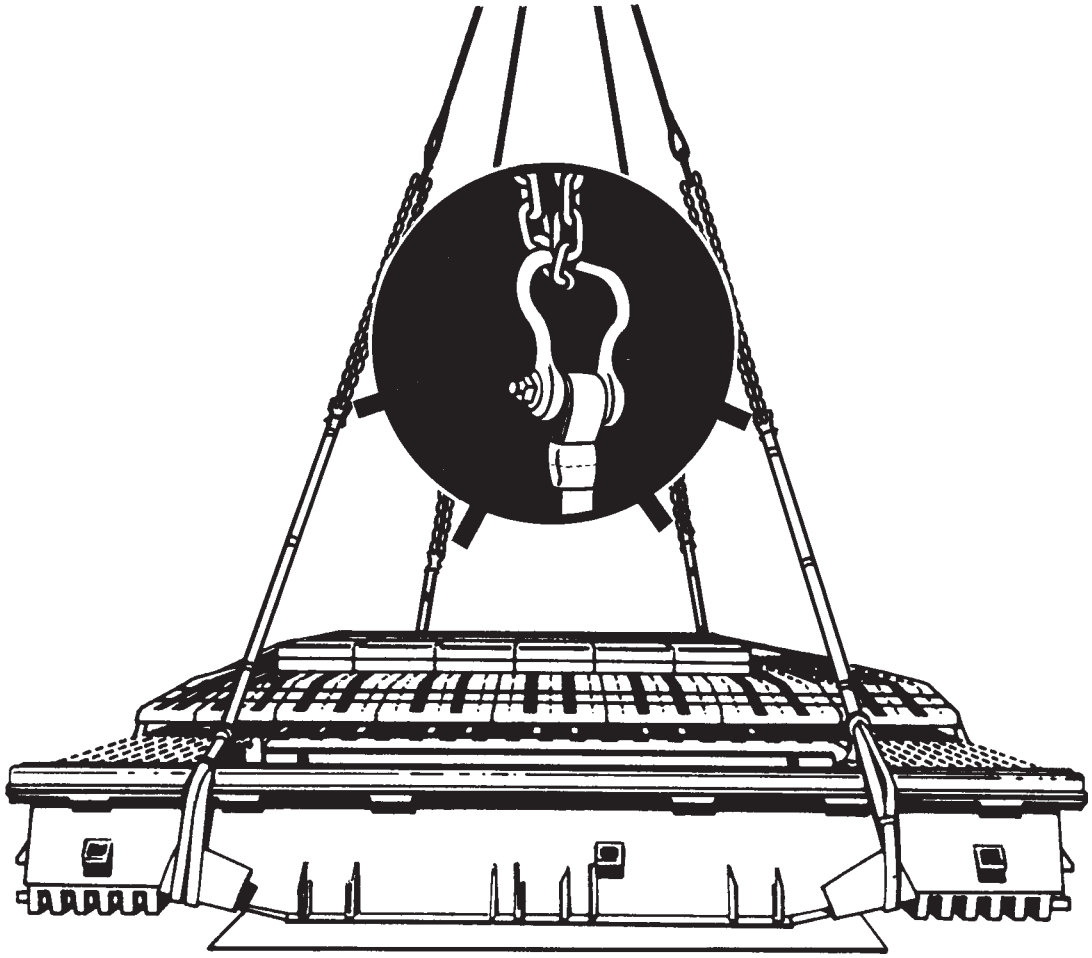

**RIGGING STEPS**

**1.** Position apex fitting on top of the bridge. Route outer sling legs 1 and 2 to the front of the load and inner sling legs 3 and 4 to the rear. Sling legs 1 and 3 must be on the left side of the load.

**2.** Choker-hitch a 12-foot, 4-loop, Type XXVI nylon sling through the opening in each corner of the bridge.

**3.** Insert a large clevis in the running end of each 12-foot sling. Ensure the bolt runs through the sling and the nut is tight on the bolt.

**4.** Loop the chain end of sling leg 1 through the large clevis on the 12-foot sling on the front left corner of the bridge . Place the correct link from Table 24-4 in the grab hook. Repeat with sling leg 2 and the right front corner of the bridge.

**5.** Loop the chain end of sling leg 3 through the large clevis on the 12-foot sling on the rear left corner of the bridge . Place the correct link from Table 24-4 in the grab hook. Repeat with sling leg 4 and the right rear corner of the bridge.

**6.** Cluster and tie or tape (breakaway technique) all sling legs together to prevent entanglement during hookup and lift-off.

*Figure 24-4. Medium-Span Bridge*

## 24-6. M4T6 Bridge

**a. Applicability.** The following item in Table 24-5 is suitable for sling load by all **ARMY** helicopters with suitable lift capacity:

**Table 24-5. Medium-Span Bridge**

| NOMENCLATURE | MAX WEIGHT (POUNDS) | SLING SET | LINK COUNT FRONT/REAR | RECOMMENDED AIRSPEED (KNOTS) |
|---|---|---|---|---|
| Bridge, Floating, Aluminum, Highway Type, Deck-Balk Superstructure on Pneumatic Floats, M4T6 | 9,000 | 25K | 4/4 | 50 |

**b. Materials.** The following materials are required to rig this load:

**(1)** Sling set (25,000-pound capacity).

**(2)** Tape, adhesive, pressure-sensitive, 2-inch wide roll.

**(3)** Cord, nylon, Type III, 550-pound breaking strength.

**(4)** Webbing, cotton, 1/4-inch, 80-pound breaking strength.

**c. Personnel.** Two persons can prepare and rig this load in 10 minutes.

**d. Procedures.** The following procedures apply to this load:

**(1) Preparation.** Ensure all components are securely attached together.

**(2) Rigging.** Rig the load according to the steps in Figure 24-5.

**(3) Hookup.** The hookup team stands on top of the bridge. The static wand person discharges the static electricity with the static wand. The hookup person places the apex fitting onto the aircraft cargo hook. The hookup team then moves clear of the load but remains close to the load as the helicopter removes slack from the sling legs. When successful hookup is assured, the hookup team quickly exits the area underneath the helicopter to the designated rendezvous point.

**(4) Derigging.** Derigging is the reverse of the preparation and rigging procedures in steps d (1) and d (2).

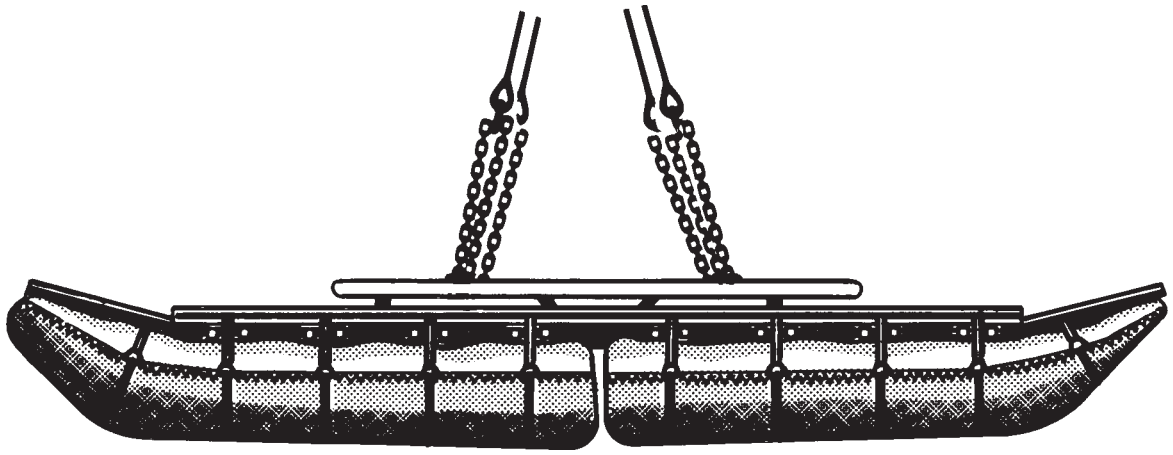

**RIGGING STEPS**

**1.** Position apex fitting on top of the center of the bridge. Route outer sling legs 1 and 2 to the forward end of the balk connecting stiffener and inner sling legs 3 and 4 to the rear. Sling legs 1 and 3 must be on the left side of the load.

**2.** Loop the chain end of sling leg 1 around the seventh balk connection pin from the forward end on the left balk connecting stiffener. Place the correct link from Table 24-5 in the grab hook. Repeat with sling leg 2 and the seventh connection pin from the forward end of the right balk stiffener.

**3.** Loop the chain end of sling leg 3 around the seventh balk connection pin from the rear end on the left balk connecting stiffener. Place the correct link from Table 24-5 in the grab hook. Repeat with sling leg 4 and the seventh connection pin from the rear end of the right balk stiffener.

**4.** Cluster and tie or tape (breakaway technique) all sling legs together to prevent entanglement during hookup and lift-off.

***Figure 24-5. M4T6 Bridge***

# APPENDIX A

## NATIONAL STOCK NUMBERS FOR SLINGS, NETS, AND SPARE PARTS

## 10,000-POUND CAPACITY SLING SET AND COMPONENTS

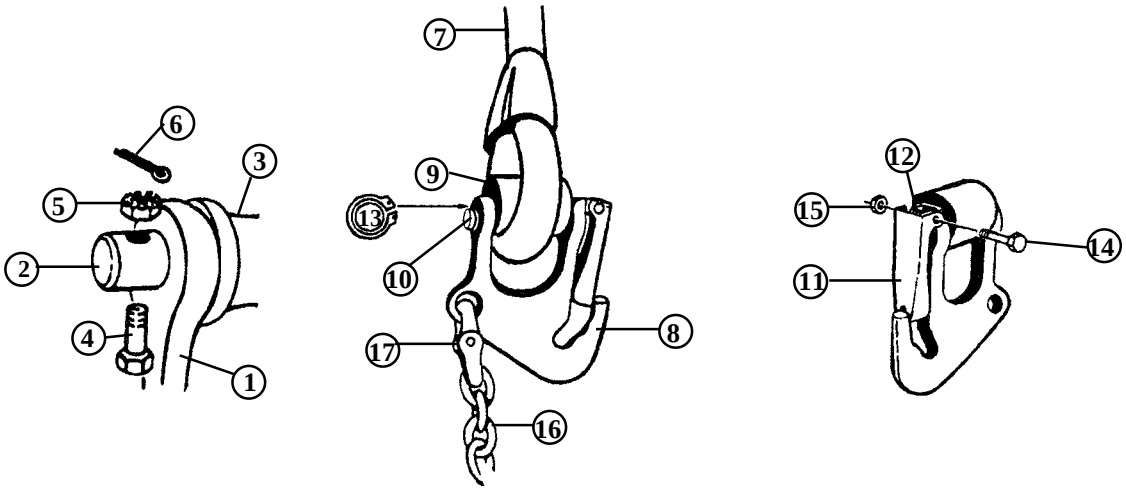


**10,000- or 25,000-Pound Capacity Sling Set (Circled Numbers Correspond with NSNs of Identified Part)**

| | NSN | PART NUMBER | DESCRIPTION | Qty |
|---|---|---|---|---|
| | 1670-01-027-2902 | 38850-00001-043 | Sling Set Assembly Complete LIN T79003 | 1 ea |
| 1 | 4030-01-048-4045 | 38850-00004-045 | Apex Fitting Assembly | 1 ea |
| 2 | 5315-01-115-3482 | 38850-00008-101 | Pin, Apex Fitting | 1 ea |
| 3 | 5365-01-235-0908 | 38850-00015-104 | Spacer, Apex | 1 ea |
| 4 | 5306-00-944-1536 | NAS1306-16D | Bolt | 1 ea |
| 5 | 5310-00-207-9274 | AN 320C6 | Nut, Castellated | 1 ea |
| 6 | 5315-00-2341864 | MS 24665-302 | Cotter Pin | 1 ea |
| 7 | 4020-01-047-6814 | 38850-00009-055 | Rope Assembly, Black | 4 ea |
| 8 | 4030-01-048-4046 | 38850-00011-041 | Grabhook Assembly | 4 ea |
| 9 | 5364-01-109-2543 | 38850-00015-101 | Spacer, Grabhook | 4 ea |
| 10 | 5315-01-121-0497 | 38850-00008-103 | Pin, Spacer | 4 ea |
| 11 | 4030-01-100-1684 | 38850-00017-101 | Keeper, Grabhook | 4 ea |
| 12 | 5360-01-115-6833 | 38850-00019-101 | Keeper, Spring | 4 ea |
| 13 | 5365-01-046-3670 | MS 3217-1050 | Snap Ring | 4 ea |
| 14 | 5306-00-771-7621 | NAS 1303-21 | Bolt, Shear | 4 ea |
| 15 | 5310-00-807-1467 | MS 21042-3 | Nut, Lock | 4 ea |
| 16 | 4010-01-058-4772 | 38850-00053-101 | Chain, 8-foot Length | 4 ea |
| 17 | 4010-01-193-9331 | 577-0615 | Link, Coupling | 4 ea |
| 18 | 8460-00-606-8366 | Mil-41835 | Kit Bag, Flyer's | 1 ea |

## 25,000-POUND CAPACITY SLING SET AND COMPONENTS

| | NSN | PART NUMBER | DESCRIPTION | Qty |
|---|---|---|---|---|
| | 1670-01-027-2900 | 38850-00001-044 | Sling Set Assembly Complete LIN T79009 | 1 ea |
| 1 | 4030-01-048-4044 | 38850-00004-046 | ShackleAssembly | 1 ea |
| 2 | 5315-01-119-9065 | 38850-00008-102 | Pin, Apex Fitting | 1 ea |
| 3 | 1670-01-235-0907 | 38850-00015-105 | Spacer, Apex | 1 ea |
| 4 | 5306-00-944-2659 | NAS1306-22D | Bolt | 1 ea |
| 5 | 5310-00-207-9274 | AN 320C6 | Nut, Castellated | 1 ea |
| 6 | 5315-00-234-1864 | MS 24665-302 | Cotter Pin | 1 ea |
| 7 | 1670-01-047-6815 | 38850-00009-056 | Rope Assembly | 4 ea |
| 8 | 4030-01-048-4047 | 38850-00011-046 | Grabhook Assembly | 4 ea |
| 9 | 1670-01-109-2544 | 38850-00015-102 | Spacer, Grabhook | 4 ea |
| 10 | 5315-01-121-2874 | 38850-00008-104 | Pin, Spacer | 4 ea |
| 11 | 4030-01-100-1685 | 38850-00017-102 | Latch, Safety Hook | 4 ea |
| 12 | 5360-01-115-6833 | 38850-00019-101 | Keeper, Spring | 4 ea |
| 13 | 5365-00-261-3918 | MS 3217-1075 | Snap Ring | 4 ea |
| 14 | 5306-00-771-7621 | NAS 1303-21 | Bolt, Shear | 4 ea |
| 15 | 5310-00-807-1467 | MS 21042-3 | Expanded Washer | 4 ea |
| 16 | 4010-01-058-4771 | 38850-00053-102 | Chain, 8-foot Length | 4 ea |
| 17 | 4010-01-041-9751 | 664241 | Link, Coupling | 4 ea |
| 18 | 8460-00-606-8366 | Mil-41835 | Kit Bag, Flyer's | 1 ea |

# 15,000-POUND CAPACITY MULTILEG SLING ASSEMBLY

| NSN | PART NUMBER | DESCRIPTION | Qty |
|---|---|---|---|
| 1670-00-902-3080 | 3900061 | Sling , multi-leg assembly, LIN T780571 TAMCN B2030 | 1 ea |
| 5365-00-946-8719 | AC6000292 | Web Ring assembly | 1 ea |
| 1670-00-719-6243 | MS24553-1 | Link Assembly, Web Ring | 1 ea |
| 1670-00-946-8631 | 3110167 | Sling leg assembly | 4 ea |
| NA | 3910112-5 | Keeper, 5-inch, leg assembly | 4 ea |
| NA | 391011-1 | Keeper, 6 1/4-inch, leg assembly | 4 ea |
| 1670-00-719-6343 | MS 24553-1 | Link assembly, sling leg | 1 ea |
| NA | 31610 | Grab link | 4 ea |
| NA | FE7623-3 | Keeper, grab link | 4 ea |
| NA | 34012-18 | Spring keeper, grab link | 4 ea |
| 5310-00-167-0818 | NAS1145f0363f | Washer keeper, grab link | 4 ea |
| 5315-00-812-3765 | MS20392-2033 | Pin, keeper, grab link | 4 ea |
| 5315-00-839-2325 | MS24665-132 | Cotter pin, keeper, grab link | 4 ea |
| NA | 31611 | Coupling link | 4 ea |
| NA | 34080-4 | Chain | 4 ea |

## 40,000-POUND CAPACITY SLING SET AND COMPONENTS

| NSN | PART NUMBER | DESCRIPTION | Qty |
|---|---|---|---|
| 3940-01-183-2118 | TAMCN | Sling Set Assembly Complete | 1 ea |
| 4030-01-199-9562 | FE8109-1 | Apex shackle assembly | 1 ea |
| NA | FE8109-5 | Shackle | 1 ea |
| NA | FE8109-3 | Pin, shackle, apex | 1 ea |
| NA | FE8109-2 | Spacer, shackle, apex | 1 ea |
| 5306-00-763-7931 | NAS1306-21D | Bolt, shear | 1 ea |
| 5310-00-176-8110 | AN320-6 | Nut, castellated, plain, hex | 1 ea |
| 5315-00-234-1864 | MS24665-302 | Cotter Pin | 1 ea |
| 3940-01-194-9364 | JETSWMC-2000 | Sling leg | 4 ea |
| 4030-01-197-1629 | FE8103-1 | Shackle assembly | 4 ea |
| NA | FE8103-4 | Spacer, grab link | 4 ea |
| 5306-00-151-1482 | AN12-42 | Bolt, grablink | 4 ea |
| 5310-00-167-1292 | AN310-12 | Nut, plain, castellated, plain, hex | 4 ea |
| 5315-00-285-7161 | MS20392-2033 | Pin, cotter | 4 ea |
| NA | 34012-18 | Spring, keeper, grab link | 4 ea |
| 5310-00-167-0818 | AN960-10 | Washer, keeper, grab link | 4 ea |
| 5315-00-839-2325 | MS24665-132 | Cotter pin, keeper, grab link | 4 ea |
| 4010-01-081-5114 | 577-0815 | Link, Coupling | 4 ea |
| NA | 607050 | Chain, 8-foot | 4 ea |

# FLAT WEB NYLON SLINGS

## TYPE X NYLON AERIAL DELIVERY SLING

| NSN | Description |
|---|---|
| 3940-00-675-5001 | Sling, endless donut, 10-inch |
| 1670-00-393-0460 | Ring assembly, 25,000-pound capacity |

## TYPE XXVI NYLON MULTILOOP LINE

| NSN | Description |
|---|---|
| 1670-01-062-6301 | 2-loop, 3 foot |
| 1670-01-062-6306 | 4-loop, 3 foot |
| 1670-01-062-6304 | 2-loop, 9 foot |
| 1670-01-062-6305 | 4-loop, 9 foot |
| 1670-01-063-7760 | 2-loop, 11 foot |
| 1670-01-062-6310 | 4-loop, 11 foot |
| 1670-01-062-6303 | 2-loop, 12 foot |
| 1670-01-062-6307 | 4-loop, 12 foot |
| 1670-01-063-7761 | 2-loop, 16 foot |
| 1670-01-062-6308 | 4-loop, 16 foot |
| 1670-01-062-6302 | 2-loop, 20 foot |
| 1670-01-064-4453 | 4-loop, 20 foot |
| 1670-01-062-6309 | 4-loop, 28 foot |
| 1670-01-062-6313 | 3-loop, 60 foot |
| 1670-01-064-4454 | 6-loop, 60 foot |
| 1670-01-062-6311 | 2-loop, 120 foot |
| 1670-01-062-6312 | 6-loop, 120 foot |
| 1670-01-107-7651 | 3-loop, 140 foot |

## ROUNDSLINGS

| NSN | CAPACITY | LENGTH |
|---|---|---|
| 1670-01-388-6789 | 5,300-pound | 8 foot |
| 1670-01-388-8480 | 8,400-pound | 8 foot |
| 1670-01-388-3845 | 5,300-pound | 17 foot |
| 1670-01-388-8479 | 8,400-pound | 17 foot |
| 1670-01-388-3917 | 13,200-pound | 30 foot |
| 1670-01-388-3901 | 21,200-pound | 65 foot |
| 1670-01-388-3965 | 21,200-pound | 70 foot |

## 5,000- AND 10.000-POUND CAPACITY CARGO NETS AND COMPONENTS

| NSN | Part Number | Description | Qty |
|---|---|---|---|
| 1670-01-058-3811 | 6018-5 | Net, 5,000-pound capacity, LIN N02776, TAMCN J3121 | 1 ea |
| 1670-01-058-3810 | 6018-10 | Net, 10,000-pound capacity, LIN N02708, TAMCN J3120 | 1 ea |
| 1670-01-070-5276 | 6019 | Apex fitting | 1 ea |
| 1670-01-067-9989 | 6020 | Hook | 4 ea |
| 4020-01-118-5826 | M7515-7N | Repair cord, used on part no. 6018-5 | As req |
| 4020-01-119-5994 | 6018-20 | Repair cord, used on part no. 6018-10 | As req |
| 8030-01-152-2286 | WB460-23 | Antiabrasion compound, olive drab | As req |
| 8030-01-154-2327 | WB460-7012 | Antiabrasion compound, black | As req |
| 1080-00-108-1155 | 13226EO964-2 | Transportease | 1 ea* |
| 8460-00-606-8366 | MIL-K-41835 | Kit bag, flyers | 1 ea* |

* Alternate NSN is 1080-00-107-8580. These cases are designed and marked for use with the camouflage screen. Camouflage system markings should be replaced with “Helicopter External Cargo Net, 10,000-pound capacity.”

## PROTECTIVE EQUIPMENT

| NSN | Description |
|---|---|
| 4240-00-052-3776 | Eye goggles |
| 8415-01-158-9445 | Gloves, electrical workers, size 9 |
| 8415-01-158-9446 | Gloves, electrical workers, size 10 |
| 8415-01-158-9447 | Gloves, electrical workers, size 11 |
| 8415-01-158-9448 | Gloves, electrical workers, size 12 |
| 8415-00-268-7859 | Gloves, leather |
| 4240-00-759-3290 | Headset (USAF) |
| 4240-00-762-2582 | Headset (USAF) |
| 8415-00-071-8786 | Helmet, flight deck (USN/USMC/USAF) |
| 6515-00-137-6345 | Plugs, ear, hearing protection |

## MISCELLANEOUS EQUIPMENT AND MATERIAL

| NSN | Description |
|---|---|
| 4030-00-360-0304 | Clevis assembly, small, MS 70087-1 |
| 5305-00-726-2553 | Bolt, Screw Cap, Hexagon Head |
| 5310-00-835-2037 | Nut, Plain, Hexagon |
| 4030-00-678-8562 | Clevis assembly, medium, MS 70087-2, Shackle |
| 5305-00-940-8069 | Bolt, Screw Cap, Hexagon Head |
| 5310-00-842-1190 | Nut, Plain, Hexagon |
| 4030-00-090-5354 | Clevis assembly, large, MS 70087-3, Shackle |
| 5305-00-177-5617 | Bolt, Screw Cap, Hexagon Head |
| 5310-00-891-3428 | Nut, Plain, Hexagon |
| 4020-00-240-2146 | Cord, nylon, Type III, 550-pound breaking strength |
| 8305-00-958-3685 | Felt sheeting, 1/2-inch thick, 30-inch wide |
| 8305-00-191-1101 | Felt sheeting, 1/2-inch thick, 60-inch wide |
| 7510-00-079-0286 | Ink, marking, parachute, orange-yellow, marker |
| 7520-00-634-6583 | Ink, marking, parachute, orange-yellow, liquid |
| 7510-00-230-2734 | Ink, marking, parachute, strata-blue, marker |
| 7520-00-286-5362 | Ink, marking, parachute, strata-blue, liquid |
| 5825-00-917-3738 | Light, beacon, beanbag |
| 6260-01-074-4230 | Light, chemical wand, 30-minute glow time, Yellow |
| 6260-00-106-7478 | Light, chemical wand, 6-hour glow time, Green |
| 6260-01-074-4229 | Light, chemical wand, 12-hour glow time, Green |
| 1670-00-783-5988 | Link assembly, Type IV |
| 1670-00-212-1149 | Rachet, Adjustable, Assembly, Tiedown |
| 1670-00-516-8405 | Tiedown, Cargo, Aircraft, 10,000-pound capacity |
| 1670-00-753-3928 | Pad, energy-dissipating, honeycomb |
| 8135-00-664-6958 | Padding, cellulose, 20-inch by 60-foot |
| 8135-00-808-6446 | Padding, cellulose, 24-inch by 125-foot |
| 8345-00-174-6865 | Panel, marker, red-yellow, VS-17, orange |
| 4020-00-231-2581 | Rope, 3/8-inch, TR605, Natural |
| 4020-00-968-1357 | Rope, fibrous, 1/2-inch, MIL-R-17343 |
| 6850-00-264-9038 | Solvent, dry cleaning, PD-680 |
| 7510-00-266-5016 | Tape, adhesive, pressure-sensitive, 2-inch wide roll, green |

## MISCELLANEOUS EQUIPMENT AND MATERIAL (CONTINUED)

| | |
|---|---|
| 7510-00-074-4969 | Tape, adhesive, pressure-sensitive, 2-inch wide roll, red |
| 1670-00-725-1437 | Tie-down strap, CGU-l/B, 5,000-pound capacity |
| 5340-01-204-3009 | Tie-down strap, web nylon, 5,000-pound capacity |
| 1670-00-937-0271 | Tie-down strap, web nylon, 10,000-pound capacity |
| 5365-00-937-0147 | D-Ring, aerial delivery |
| 3990-00-937-0272 | Load binder assembly |
| 1670-00-986-1139 | Quick-fit strap fastener |

### Two-point link assembly components:

| | |
|---|---|
| 5306-00-435-8994 | Bolt, 1-inch diameter, 4-inch long (2 each) |
| 5310-00-232-5165 | Nut, 1-inch diameter (2 each) |
| 1670-00-003-1954 | Plate, side, 5 1/2-inch long (2 each) |
| 5365-00-007-3414 | Spacer, large |
| 1670-00-574-8044 | Wand, static discharge |
| 5920-01-192-5535 | Wand, static discharge, 3-foot, PN 1610AS100-1, TAMCN C6254 |
| 5920-01-347-0728 | Wand, static discharge, 5-foot, PN 1610AS100-2, TAMCN C6252 |
| 8305-00-082-5752 | Webbing, nylon, tubular, 1/2-inch, 1,000-pound breaking strength |
| 8305-00-268-2411 | Webbing, cotton, 1/4-inch, 80-pound breaking strength |

## EXTERNAL LIFT DEVICES

| | |
|---|---|
| 1670-00-587-3421 | Bag, cargo, A-22, LIN B 14181, TAMCN C4070 |
| 3940-00-892-4380 | Cargo net, 14-foot square, 10-inch mesh |
| 3940-00-892-4374 | Cargo net, 14-foot square, 8-inch mesh |
| 1450-01-219-4360 | Mk105 pendant |
| 1450-00-414-7172 | Mk105 hoisting sling assembly, 6,000-pound capacity |
| 4020-00-881-8736 | Mk105 sling leg assembly |
| 4020-01-365-3115 | Pendant, reach, 11,000-pound capacity |
| 4020-01-337-3185 | Pendant, reach, 25,000-pound capacity |
| 1670-01-003-0803 | Releasable swivel hook pendant sling AC6000500 Mod 1 |
| 1450-00-169-6927 | Sling, pallet, Mk86, LIN S80670 |
| 1398-00-004-9175 | Sling, pallet, Mk100, LIN S80738 |
| 1670-00-103-6617 | Swivel hook sling leg, AC6000153 (USMC, USN) |

# APPENDIX B

## SLING CONVERSION CHARTS

| 10,000-POUND SLING SET CHAIN LINK NUMBER | 25,000-POUND SLING SET CHAIN LINK NUMBER | 40,000-POUND SLING SET CHAIN LINK NUMBER | 15,000-POUND MULTILEG SLING SET CHAIN LINK NUMBER |
|---|---|---|---|
| | 3 | | 51 |
| | 4 | | 52 |
| 3 | 5 | | 53 |
| 4 | 6 | | 54 |
| 5 | 6 | | 54 |
| 6 | 7 | 3 | 55 |
| 7 | 8 | 4 | 56 |
| 8 | 9 | 4 | 57 |
| 9 | 9 | 5 | 57 |
| 10 | 10 | 6 | 58 |
| 11 | 11 | 6 | 59 |
| 12 | 11 | 7 | 59 |
| 13 | 12 | 7 | 60 |
| 14 | 13 | 8 | 61 |
| 15 | 14 | 9 | 62 |
| 16 | 14 | 9 | 62 |
| 17 | 15 | 10 | NO FURTHER CONVERSIONS FOR 15,000-POUND MULTILEG SLING SET |
| 18 | 16 | 11 | |
| 19 | 16 | 11 | |
| 20 | 17 | 12 | |
| 21 | 18 | 13 | |
| 22 | 19 | 13 | |
| 23 | 19 | 14 | |
| 24 | 20 | 15 | |
| 25 | 21 | 15 | |
| 26 | 21 | 16 | |
| 27 | 22 | 16 | |
| 28 | 23 | 17 | |
| 29 | 24 | 18 | |
| 30 | 24 | 28 | |
| 31 | 25 | 19 | |
| 32 | 26 | 20 | |
| 33 | 27 | 20 | |
| 34 | 27 | 21 | |

## SLING CONVERSION CHARTS (CONTINUED)

| 10,000-POUND SLING SET CHAIN LINK NUMBER | 25,000-POUND SLING SET CHAIN LINK NUMBER | 40,000-POUND SLING SET CHAIN LINK NUMBER | 15,000-POUND MULTILEG SLING SET CHAIN LINK NUMBER |
|---|---|---|---|
| 35 | 28 | 21 | NO FURTHER CONVERSIONS FOR 15,000-POUND MULTILEG SLING SET |
| 36 | 29 | 22 | |
| 37 | 30 | 22 | |
| 38 | 31 | 23 | |
| 39 | 31 | 24 | |
| 40 | 32 | 24 | |
| 41 | 33 | 25 | |
| 42 | 34 | 25 | |
| 43 | 34 | 26 | |
| 44 | 35 | 26 | |
| 45 | 36 | 27 | |
| 46 | 37 | 28 | |
| 47 | 38 | 28 | |
| 48 | 39 | 29 | |
| 49 | 39 | 29 | |
| 50 | 40 | 30 | |
| 51 | 41 | 30 | |
| 52 | 42 | 31 | |
| 53 | 43 | 32 | |
| 54 | 44 | 32 | |
| 55 | 45 | 33 | |
| 56 | 45 | 33 | |
| 57 | 46 | 34 | |
| 58 | 47 | 34 | |
| 59 | 48 | 35 | |
| 60 | 49 | 36 | |
| 61 | 50 | 36 | |
| 62 | 50 | 37 | |
| 63 | 51 | 37 | |
| 64 | 52 | 38 | |
| 65 | 53 | 38 | |
| 66 | 54 | 39 | |
| 67 | 54 | 40 | |
| 68 | 55 | 40 | |
| 69 | 56 | 41 | |
| 70 | 57 | 41 | |

## SLING CONVERSION CHARTS (CONTINUED)

| 10,000-POUND SLING SET CHAIN LINK NUMBER | 25,000-POUND SLING SET CHAIN LINK NUMBER | 40,000-POUND SLING SET CHAIN LINK NUMBER | 15,000-POUND MULTILEG SLING SET CHAIN LINK NUMBER |
|---|---|---|---|
| 71 | 57 | 42 | NO FURTHER CONVERSIONS FOR 15,000-POUND MULTILEG SLING SET |
| 72 | 58 | 42 | |
| 73 | 59 | 43 | |
| 74 | 60 | 44 | |
| 75 | 61 | 44 | |
| 76 | 61 | 45 | |
| 77 | 62 | 46 | |
| 78 | 63 | 46 | |
| 79 | 64 | 47 | |
| 80 | 65 | 48 | |
| 81 | 65 | 48 | |
| 82 | 66 | 49 | |
| 83 | 67 | 49 | |
| 84 | 68 | 50 | |
| 85 | 68 | 51 | |
| 86 | 69 | 51 | |
| 87 | 70 | 52 | |
| 88 | 71 | 53 | |
| 89 | 72 | 53 | |
| 90 | 72 | 54 | |
| 91 | 73 | 55 | |
| 92 | 74 | 55 | |
| 93 | 75 | 56 | |
| 94 | 76 | 57 | |
| 95 | 76 | 57 | |
| 96 | 77 | 58 | |
| 97 | 78 | 58 | |
| 98 | 79 | 59 | |
| 99 | 79 | 60 | |
| 100 | 80 | 60 | |
| 101 | 81 | 61 | |
| 102 | 82 | 62 | |
| 103 | 83 | 62 | |
| 104 | 83 | 63 | |
| 105 | 84 | 64 | |
| 106 | | 64 | |
| 107 | | 65 | |

# GLOSSARY

## ACRONYMS AND ABBREVIATIONS

| | |
|---|---|
| **ACP** | assault command post |
| **ADCGS** | aviation direct current generator set |
| **AETC** | auxiliary equipment transportation container |
| **AFATADS** | advanced field artillery tactical data systems |
| **AGPU** | aviation ground power unit |
| **ARL-C** | airborne reconnaissance low-comint |
| **ARL-I** | airborne reconnaissance low-imagery |
| **ASK** | acoustic suppression kit |
| **AS** | aviation section |
| **ATG** | antenna transceiver group |
| **BIDS** | biological integrated detection system |
| **bn** | battalion |
| **BSTF** | base shop test facility |
| **BTU** | British Thermal Unit |
| **CAFSM** | compressed air foam system, mobile |
| **CBC** | cargo bed cover |
| **CFM** | cubic feet per minute/cylinder filling module |
| **CG** | center of gravity |
| **CLFFK** | company level field feeding kit |
| **CMTH** | contact maintenance truck, heavy |
| **CONEX** | container express |
| **CWAR** | continuous wave acquisition radar |
| **DASC** | direct air support central |
| **DAMP** | digital antenna mast program |
| **DDSS** | downsized direct support section |
| **DDGM** | downsized digital group multiplexer |
| **DET** | distributed explosive technology |
| **DGM** | digital group multiplexer |
| **DOD** | Department of Defense |
| **DOM** | desert operation motorcycle |
| **DOT** | desert operation trailer |
| **DTSS-L** | digital topographic support system-light |
| **EALP** | enclosure assembly launch pods |
| **EBFL** | extendable boom forklift |
| **ECU** | environmental control unit |
| **EFOGM** | enhanced fiber optic guided missile |
| **ELAMS** | expandable light airmobile shelter |
| **EMI** | electromechanical induction |
| **EPLRS** | enhanced position location reporting system |
| **FAAR** | forward area alerting radar |
| **FARE** | forward area refueling equipment |
| **FMOGDS** | field medical oxygen generation/distribution system |
| **FOPS** | falling objects protection system |
| **FUPP** | full-up power pack |
| **GMLA** | guided missile launch assembly |
| **GPH** | gallons per hour |
| **GPM** | gallons per minute |
| **HATS** | hardened army tactical shelter |
| **HEMAT** | heavy expanded mobility ammunition trailer |
| **HMD** | high mobility downsized |
| **HMDA** | high mobility digital group multiplexer assemblage |
| **HMMH** | high mobility materiel handler |
| **H-HMMWV** | heavy high-mobility multipurpose wheeled vehicle |
| **HMMWV** | high-mobility multipurpose wheeled vehicle |
| **HMT** | high mobility trailers |
| **HSTRU** | hydraulic system test and repair unit |
| **HZ** | hertz |
| **IAS** | intelligence analysis system |
| **IEW** | intelligence and electronic warfare |
| **IFAV** | interim fast attack vehicle |
| **IMETS** | integrated meteorological systems |
| **ISO** | International Organization of Standardization |
| **JSTAR** | joint surveillance target attack radar |
| **JTIDS** | joint tactical information distribution system |
| **KW** | kilowatt(s) |
| **LAV** | light armored vehicle |
| **LCAC** | landing craft air cushioned |
| **LHGXA** | lightweight high gain x-band antenna |
| **LIK** | landing interface kit |
| **LIN** | line number |
| **LMS** | lightweight multipurpose shelter |
| **LMTV** | light medium tactical vehicle |
| **LTACFIRE** | lightweight tactical fire control system |
| **LTR** | light tactical floating raft bridge |
| **LVAD** | low velocity airdrop |
| **MASINT** | measurements and signature intelligence |
| **MGB** | medium girder bridge |

| | |
|---|---|
| **MHG** | meterological hydrogen generator |
| **MICLIC** | mine clearing line charge |
| **MILSTD** | military standard |
| **MLRS** | multiple launch rocket system |
| **mm** | millimeter |
| **MOSLS** | minimum operating strip lighting system |
| **MOST** | mobile oversnow transport |
| **MR** | mobile radio |
| **MRBS** | mobile radio broadcasting subsystem |
| **MSFDCS** | multiservice flight data collection sheet |
| **MT** | mobile television |
| **MTBS** | mobile television broadcasting subsystem |
| **MTMCTEA** | Military Traffic Management Command Transportation Engineering Agency |
| **MTS** | mobile-track system |
| **MTV** | medium tactical vehicle |
| **NABS** | NATO airbase satcom |
| **NATO** | North Atlantic Treaty Organization |
| **NAVAIR** | Naval Air Systems Command |
| **NCS-E(D)** | downsized net control system |
| **NRDEC** | Natick Research, Development, and Engineering Center |
| **NSN** | national stock number |
| **OC** | operations central |
| **OCG** | operational control group |
| **OGDM** | oxygen generation/distribution module |
| **OVE** | operator vehicle equipment |
| **PN** | part number |
| **POC** | platoon operations center |
| **PTO** | pioneer tool outfit |
| **QRSA** | quick reaction satellite antenna |
| **RIE** | required individual equipment |
| **RLST** | remote landing site tower |
| **ROPS** | roll-over protection system |
| **ROWPU** | reverse osmosis water purification unit |
| **RP/C** | rocket pod/container |
| **RT** | rough terrain |
| **SCAMP** | self-propelled crane for Army aircraft maintenance and positioning |
| **SCOTT** | single channel objective tactical terminal |
| **SDASS** | special diver's air support system |
| **SEE** | small emplacement excavator |
| **SICPS** | standardized integrated command post systems |
| **SIXCON** | six-compartment container |
| **SMART-T** | secure mobile anti-jam tactical terminal |
| **SMMS** | sensor mobile monitoring system |
| **SOMS-B** | special operations media system |
| **SPAM** | shop, portable aircraft maintenance |
| **SPEARR** | small portable expeditionary aeromedical rapid response |
| **SSC** | Soldier Systems Center |
| **SSS** | single shelter switch |
| **SUSV** | small unit support vehicle |
| **TAFDS** | tactical airfield fuel dispensing system |
| **TAMCN** | Table of Authorized Material Control Number |
| **TM** | technical manual |
| **TMS** | tactical messaging system |
| **TOW** | tube launched, optically tracked, wireguided |
| **TQG** | tactical quiet generator |
| **TRSS** | tactical remote sensor system |
| **TSS** | tracked suspension system |
| **TTCS** | tactical terminal control system |
| **US** | United States |
| **USA** | United States Army |
| **USMC** | United States Marine Corps |

# REFERENCES

## REQUIRED PUBLICATIONS

Required publications are sources that users must read in order to understand or to comply with this publication.

### MULTISERVICE PUBLICATION

AFJMAN 24-204/TM 38-250/NAVSUP PUB 505/MCO P 4030.19F/DLAM 4145.3, Packaging and Materials Handling: Preparing Hazardous Materials for Military Air Shipment. November 1994.

FM 10-450-3/MCRP4-23E, Vol I/NWP 3-04.11/AFJMAN 11-223, VOL I/COMDTINST M13482.2A
Multiservice Helicopter Sling Load: Basic Operations and Equipment. April 1997.

MIL STD 913 - Requirements for the Certification of Sling Loaded Equipment for External Transportation by Department of Defense Helicopters. February 1997.

TM 9-2320-285-24&P - Unit, Direct Support, and General Support Maintenance Repair Parts and Special Tools Lists, Truck, Tractor, Yard-type: 43,500 GVW, DED, 4 x 2 (Army Model M878A1). June 1992.

TM 9-1015-252-10 - Operator's Manual for Howitzer, Light, Towed: 105-MM, M119A1. October 1992.

TM 9-1425-2585-10-1 - System Description of M48A2 (Chaparral Air Defense Guided Missile System). June 1984.

TM 9-1430-588-10 - Operator's Manual for Radar Set, AN/MPQ-49 (Forward Area Alerting Radar System). February 1986.

By Order of the Secretary of the Army:

DENNIS J. REIMER
*General, United States Army*
*Chief of Staff*

Official:

JOEL B. HUDSON
*Administrative Assistant to the*
*Secretary of the Army*
04504

**DISTRIBUTION:**

**Active Army, Army National Guard, and U.S. Army Reserve: To be distributed in accordance with the initial distribution number 114616, requirements for FM 10-450-4.**

*U.S. Government Printing Office: 1998 - 628-027/80064