TM 5–855–4

TECHNICAL MANUAL

# HEATING, VENTILATION, AND AIR CONDITIONING OF HARDENED INSTALLATIONS

HEADQUARTERS, DEPARTMENT OF THE ARMY
NOVEMBER 1986

**REPRODUCTION AUTHORIZATION / RESTRICTIONS**

**This manual has been prepared by or for the Government and is public property and not subject to copyright.**

**Reprints or republications of this manual should include a credit substantially as follows: "Department of the Army, Technical Manual TM 5-855-4, Heating, Ventilation, and Air Conditioning of Hardened Installations."**

TECHNICAL MANUAL

NO. 5-855-4

HEADQUARTERS
DEPARTMENT OF THE ARMY
Washington, D.C. *28 November 1986*

# HEATING, VENTILATION, AND AIR CONDITIONING OF HARDENED INSTALLATION

TABLE OF CONTENTS


| | | Paragraph | Page |
|---|---|---|---|
| CHAPTER 1. | INTRODUCTION | | |
| | Purpose | 1–1 | 1–1 |
| | Scope | 1–2 | 1–1 |
| | Criteria | 1–3 | 1–1 |
| | Operating modes | 1–4 | 1–2 |
| | Hardened configurations | 1–5 | 1–3 |
| CHAPTER 2. | DESIGN CONSIDERATIONS | | |
| | General | 2–1 | 2–1 |
| | Makeup air | 2– | 2–1 |
| | Combustion air | 2–3 | 2–2 |
| | Vitiated air | 2–4 | 2–3 |
| | Temperature and humidity | 2–5 | 2–6 |
| | Internal loads | 2–6 | 2–8 |
| | External loads | 2–7 | 2–9 |
| | Moisture loads | 2–8 | 2–10 |
| | Air distribution and fire protection | 2–9 | 2–11 |
| | (CBR) protection | 2–10 | 2–12 |
| | Economic factors | 2–11 | 2–16 |
| | Survivability and reliability | 2–12 | 2–12 |
| CHAPTER 3. | UNDERGROUND HEAT TRANSFER | | |
| | Underground heat conduction fundamentals | 3–1 | 3–1 |
| | Underground conduction standard calculation method | 3–2 | 3–2 |
| | Underground conduction shortcut calculation method | 3–3 | 3–10 |
| | Tunnel intake air tempering | 3–4 | 3–15 |
| | Thermal properties of rock | 3–5 | 3–18 |
| | Thermal properties of materials and structures | 3–6 | 3–26 |
| | Conversion time duration | 3–7 | 3–26 |
| | Trend analysis | 3–8 | 3–26 |
| | Sample problems | 3–9 | 3–33 |
| CHAPTER 4. | HVAC EQUIPMENT | | |
| | General | 4–1 | 4–1 |
| | Air cleaners | 4–2 | 4–1 |
| | CBR filters | 4–3 | 4–3 |
| | Coils and piping | 4–4 | 4–7 |
| | Refrigeration equipment | 4–5 | 4–9 |
| | Fans | 4–6 | 4–9 |
| | Duct systems | 4–7 | 4–9 |
| | Humidity control systems | 4–8 | 4–10 |
| | Computer area cooling | 4–9 | 4–11 |
| | Boilers and heat recovery | 4–10 | 4–11 |


This manual supersedes TM 5-855-4 dated August 1965

| | | Paragraph | Page |
|---|---|---|---|
| CHAPTER 5. | WASTE HEAT DISPOSAL | | |
| | Heat sinks | 5–1 | 5–1 |
| | Once through and recirculated reservoirs | 5–2 | 5–1 |
| | Iced reservoirs | 5–3 | 5–3 |
| | Solid ice heat sinks | 5–4 | 5–4 |
| | Sample problems | 5–5 | 5–5 |
| | Cooling towers | 5–6 | 5–12 |
| | Radiators | 5–7 | 5–14 |
| CHAPTER 6. | DECONTAMINATION FACILITIES | | |
| | General | 6–1 | 6–1 |
| | Entrances | 6–2 | 6–2 |
| | Decontamination | 6–3 | 6–5 |
| | Ventilation | 6–4 | 6–9 |
| APPENDIX A. | REFERENCES | | A–1 |
| APPENDIX B. | UNITS, SYMBOLS, AND EQUATION | | B–1 |
| GLOSSARY | | | Glossary |

## LIST OF FIGURES

| | | |
|---|---|---|
| Figure 3-1. | Wall flux ratio of equivalent cylinder or sphere. | 3–5 |
| 3-2. | Thermal resistance factor, cylinder model, warm-up. | 3–6 |
| 3-3. | Thermal resistance factor, sphere model, warm-up. | 3–7 |
| 3-4. | Thermal conductance factor, cylinder model, holding. | 3–8 |
| 3-5. | Thermal conductance factor, sphere model, holding. | 3–9 |
| 3-6. | Underground cavity, typical isotherms. | 3–11 |
| 3-7. | Rock shell volume isometric. | 3–12 |
| 3-8. | Typical warm-up temperature profiles. | 3–13 |
| 3-9. | Volume averaged rock shell temperature ratio. | 3–14 |
| 3-10. | Tunnel air temperature, amplitude and lag factors. | 3–17 |
| 3-11. | Density and thermal conductivity of igneous rocks. | 3–21 |
| 3-12. | Unfrozen silt and clay soils conductivity. | 3–22 |
| 3-13. | Frozen silt and clay soils conductivity. | 3–23 |
| 3-14. | Unfrozen sandy soil conductivity. | 3–24 |
| 3-15. | Frozen sandy soil conductivity. | 3–25 |
| 3-16. | Warm-up heat flux for k = 1.2 and 25 ° F differential. | 3–29 |
| 3-17. | Warm-up heat flux for k = 1.7 and 27° F differential. | 3–30 |
| 3-18. | Holding heat flux for k = 1.2 and 25 ° F differential. | 3–31 |
| 3-19. | Holding heat flux for k = 1.7 and 25° F differential. | 3–32 |
| 4-1. | CB particulate and gas filter. | 4–4 |
| 4-2. | CB gas filter model FFU-17/E. | 4–5 |
| 4-3. | CB filter assembly. | 4–6 |
| 4-4. | Bladder-type attenuator for chilled water. | 4–8 |
| 5-1. | Typical hardened cooling water system. | 5–13 |
| 6-1. | Corridor type decontamination facility retrofit. | 6–3 |
| 6-2. | M2 permeable membrane door. | 6–4 |
| 6-3. | Dual decontamination facility. | 6–6 |
| 6-4. | Decontamination facility sized for 18 people per hour. | 6–7 |
| 6-5. | Contaminated clothes chute. | 6–8 |
| 6-6. | Air pressure regulator M-1. | 6–10 |
| 6-7. | Antiback-draft valve. | 6–11 |

## LIST OF TABLES

| | | |
|---|---|---|
| Table 2-1. | Typical personnel metabolic rates. | 2–4 |
| 2-2. | Properties of air regeneration chemicals. | 2–5 |
| 2-3. | Humidity tolerance of selected materials. | 2–6 |
| 2-4. | Particulate filters. | 2–15 |
| 2-5. | Gas filters. | 2–15 |
| 3-1. | Typical thermal properties of various materials. | 3–20 |
| 3-2. | Selected parameters for trend analysis. | 3–28 |
| 4-1. | Performance of dry media particulate filters. | 4–2 |
| 5-1. | Comparison of 10-day capacity heat sinks. | 5–7 |
| 5-2. | Reservoir length versus time at fixed 400 ft section | 5–9 |

# CHAPTER 1

# INTRODUCTION

## 1-1. Purpose.

*a*. This manual provides guidance for engineers in the planning and design of heating, ventilation, and air-conditioning (HVAC) for hardened military and strategic facilities at new or existing Army installations. The material presented includes data for auxiliary equipment systems with special reference to underground installations not normally covered in HVAC manuals.

*b*. The term "hardened' applies to facilities intentionally designed to be resistant to conventional explosive effects, nuclear weapons effects, chemical or biological attack, and intruder attack. This manual addresses the technology of HVAC systems as it pertains to hardened facilities without regard to a specific type of attack, unless specifically required for design purposes.

*c*. Because of continuing research in the offensive and defensive techniques of warfare, it is strongly recommended that close coordination be maintained with the Commander, U.S. Army Corps of Engineers, Attention: HQDA (DAEN-ECE-T) Washington, D.C. 20314-1000 and the U.S. Army Armament Munitions and Chemical Command (AMCCOM) Chemical Research and Development Center (CRDC), Attention: SMCCR-PPP, Aberdeen Proving Ground, Maryland 21010-5423.

## 1-2. Scope.

*a*. It is outside of the scope of this manual to cover explicitly all rules and procedures pertaining to HVAC design; however, the manual is written for HVAC engineers possessing state-of-the-art expertise in their discipline but who are unfamiliar with the requirements of hardened installations. Wherever possible reference is made to design data guidelines and information included in other references. Only design data that is not easily found elsewhere is included in the present manual.

*b*. Decontamination facilities and other HVAC protection against chemical and biological agents and radiological fallout are included in this manual, but the design of hardened facilities is covered in the references listed in appendix A. In particular, the TM 5-858 series of manuals pertains to "Designing of Facilities to Resist Nuclear Weapon Effects". In addition, TM 5-855-1 provides guidance for the design of facilities subject to non-nuclear attack, and TM 5-855-5 provides detailed guidance for protection from nuclear electromagnetic pulse.

## 1-3. Criteria.

*a*. After establishing the requirements for a hardened facility, concept criteria are developed based on environmental constraints, mission requirements, system configuration, and facility operational modes.

(1) In particular, the engagement or operational scenario defines the degree and time of isolation required, the length of warning time the facility commander will have prior to attack, the design weapon effects, and other operational conditions which are necessary for design and operational reliability of the facility.

(2) Complementing the scenario, associated design criteria are developed on local soil conditions; size and proximity of weapon detonation; type and quantity of fallout debris, dust, or ejecta;, and growth factors to be plugged in the sizing of equipment; as well as other design factors.

(3) From the scenario and associated criteria, the HVAC designers will extract conditions, time periods, and events which will dictate the configuration and design of the facility environmental and associated auxiliary systems. For example, the warning time, weapon effects, RFI protection, and degree of isolation will dictate the response time of the closure devices required to seal the outside air intakes and to isolate the facility from airborne chemical biological (CB) contaminants.

*b*. The HVAC criteria for temperature, humidity, and other air quality conditions required in hardened installations are similar to those maintained in conventional surface structures when the missions are similar. The conditions peculiar to underground use are emphasized in this manual, with some data and information applicable to general HVAC problems included for the sake of convenience.

*c.* The heating and air-conditioning system must maintain conditions suitable for personnel efficiency and for material preservation and operation of essential equipment during standby, normal-operating, and attack and post-attack periods. Rejuvenation of the air will also be considered for conditions of extreme emergency and disaster. Steady-state environmental requirements during peace time and war time will exist only in such facilities as unmanned and sealed-up material storage facilities. All other hardened facilities within the scope of this manual must be designed to function throughout a wide range of operating conditions influenced by season, manning levels, and mission. Facilities are classified by operational requirements in accordance with the following:

*(1) Continuous operation.* The HVAC designer will be required to develop environmental systems that will function throughout all operating conditions. Ventilation air must be filtered for space pressurization. Essential parts of the HVAC system must survive the threat, although some non-essential components may be sacrificed as long as the system as a whole continues to function. Command and communication centers, surveillance and intercept radar, and missile launch and control centers are indicative of this type of facility.

*(2) Button-up with active survival.,* Facilities of this type are designed to cease operations when attacked, to button-up and become isolated during the attack, and to resume operations after necessary repairs are made. The primary function of this type of installation is to protect personnel and equipment. Underground industrial plants, administrative agencies, and air raid shelters normally conform to this facility category.

(3) *Button-up with passive survival.* Facilities of this type will be designed as a protective structure with seal-up provisions only to prevent contamination of the protected material. Seal-up provisions will consist of closing doors and dampers upon notification of a threat and keeping them sealed until the threat is over. Underground facilities for storage of materials with high strategic or replacement value, such as archives and art objects, would be representative of this type of facility.

## 1-4. Operating modes.

*a. Overview.* The facilities under consideration must operate in peace, war, and under the threat of war. It is beyond the scope of this manual to set forth specific operational procedures required for each condition; however, operational and design assumptions must be made prior to design. The installation of equipment and operation of the structure is based on the following operating modes.

*b. Normal conditions.* A normal condition exists when" a structure is continually occupied and prepared for the accomplishments of a mission. Normal conditions will exist prior to button-up.

(1) Facility power will normally be provided by a commercial utility, though many facilities switch to emergency power when storms occur because of unreliable commercial power.

(2) HVAC systems will be operating with the design outside air passing through CB filters. Bypassing the CB filters will not be allowed unless facility mission is minor, and continuous protection against covert attack is not required by the operational scenario. Air from areas such as toilets, equipment rooms, and power plants will be exhausted to the outside.

(3) Waste heat will be rejected to the outside through normal cooling towers or radiators. Heat sinks will normally be filled and maintained at design temperature because the time required to lower the heat sink to its design temperature is greater than most warning periods.

*c. Alert conditions. An* alert condition exists during a real or practice exercise. In the alert mode, steps will be taken to improve the defense posture of the facility.

(1) The facility power plant will be put in operation and will either share the load with the public utilities or carry it all as prescribed in the operational scenario.

(2) No CB filter bypasses are permitted under any conditions. This must be the case because detectors will only indicate that gases or chemicals have been introduced into the system or broken through the filters, leaving no time to take preventive action. Combustion air will continue to be drawn through primary dust scrubbers. Personnel movement in the unoccupied facility areas unprotected by the CB filters will be curtailed.

(3) The button-up period normally commences with the alert alarm and continues until the seal-up period starts. Limited egress and ingress may be permitted. In shallow buried facilities, the prime movers are supplied from unhardened fuel storage, and the unhardened cooling towers remain in operation. All other systems are sealed from the outside except for air supply.

(4) Hardened heat rejection equipment will be utilized if attack is imminent and throughout the seal-up period covered in *d(2)* below.

*d. Attack conditions.* Attack conditions exists when weapons have been detonated in the area. The atmosphere may be contaminated and weapon effects may have rendered external cooling water equipment inoperative.

(1) In the attack mode, the facility is closed to protect filters, personnel, and pertinent equipment from blast pressure. The HVAC system is totally isolated from the outside. Ventilation and exhaust air is recirculated through carbon filters for odor removal. The prime mover combustion air is ducted through the primary dust separator and a scrubber for dust removal and temperature control. Contaminated dust slurry from the scrubber is piped to the outside. Facility operation is independent of commercial power.

(2) The seal-up period begins with attack warning and continues until the outside environment is tolerable. Fuel is supplies from hardened tanks, and cooling water is supplied from hardened heat sinks and cooling towers.

e. *Disaster conditions.* Under disaster conditions, the installation is inoperative due to damage or exhaustion of cooling water, fuel, or oxygen. To sustain life it may be necessary to utilize oxygen generation and carbon dioxide absorption equipment.

*f. Postattack conditions* After an all clear signal from an attack has been given, the facility can return to an alert condition The post-attack conditions end when the facility objectives are completed.

g. *Other conditions.* The period from button-up or weapon detonation to attack completion is also known as transattack and may range from minutes to days. Together with the postattack it is collectively referred to as the facility endurance period or simply facility endurance.

## 1-5. Hardened configuration.

*a.* The primary objective of a hardened structure is to withstand the effects of hostile weapons and complete the missions for which it was designed. Depending on the degree of hardening and the nature of this mission, hardened structures may be above or underground.

*b.* A structure is aboveground when all or a portion of the structure projects above the ground. Structures mounded over with slopes steeper than 1:4 are considered aboveground.

c. With respect to the ground surface, a structure is flush or partially buried when its rooftop is flush or buried less than half the structure diameter. Below these levels the structure is deep or shallow-buried depending on whether or not the buried depth enables it to absorb a direct overhead burst. Fortifications and air raid shelters are usually the shallow-buried type and equipped with blast doors, baffles, and labyrinth entrances to provide some blast attenuation.

*d.* A deep buried facility so defined is a structure buried deep enough that the direct induced ground motion effects govern design rather than air induced effects. Deep-buried installations can be made almost invulnerable and are generally used for protection of large one-of-a-kind facilities such as command and control centers, which cannot risk relying on redundancy or dispersion to ensure operability. Such important installations are invariable located in hard rock to use the strength of rock for protection and because rock is usually found at the depths of burial necessitated by nuclear weapons of the megaton class.

(1) Deep underground structures are the most costly and present the most operational problems. Deep-underground facilities typically can be several hundred or thousand feet below the surface. Deep-underground facilities must have survivable entrances, exits, communication links, etc., which will be shallow-buried *or* aboveground facilities. The designer must ensure that the appropriate weapon effects are considered for each component of the facility.

(2) Some features of the structural arrangement of a depe-underground installation affect the size and design of the air-conditioning system. Relevant definitions are as follows:

*(a) Bare chamber. An* underground chamber with no covering on the rock walls or ceiling that appreciable affects heat transfer. Walls painted to improve illumination of the chamber are considered bare from the heat-transfer standpoint A chamber with a concrete floor poured on the underlying rock is also considered a bare chamber.

*(b) Lined chamber.* An underground chamber with a wall covering of concrete or other material in contact with the rock walls and ceiling. Liners may consist of insulating or acoustical material and may contain a vapor barrier.

*(c) Internal structure.* A building or enclosure erected within an underground chamber to house equipment or facilities. The internal structure reduces the heat transfer from the occupied space to the rock and influences the dehumidification load.

*(d) Annular space.* The space around an internal structure, between the structure and the rock walls, floor, and ceiling of an underground chamber

*e.* Structurally, there is the greatest difference between the different types of hardened facilities just described, but from the HVAC viewpoint there is much less difference because of the necessity of providing openings to let air, personnel, equipment, and supplies in and out of the facility. This manual will focus attention on the main complicating factors underground, which are the heat and moisture transfer at the boundaries of the occupied space. Mathematical conventions used throughout this manual are listed in appendix B.

*f.* Occupant survival and ability to function is necessary for accomplishing the mission of practically all hardened facilities. Preventing entry of CB contaminants into the facility when attacked is vital in this respect. The HVAC design must be conservative to a degree consistent with the other elements of the facility. Long term mission, for instance, will require the facility to withstand multiple attacks and to continue to function with minor repairs and resupply. Coordination of these design objectives should be spelled out in the criteria. Design information to fulfill these objectives are discussed in the five remaining chapters with definitions of abbreviations and terms contained in the glossary.

# CHAPTER 2

# DESIGN CONSIDERATIONS

## 2-1. General.

*a*. To fulfill the basic objectives of the prime mission material/personnel (PMMP), the HVAC system must prevent CB contamination and ensure survival and operation of occupants and equipment in a degree consistent with the other elements of the facility as required by the PMMP or specified by facility designers or both. The methodology for integrating the HVAC design in the total design of an effective facilities is covered in TM 5-858-1 in the context of availability, survivability, endurance, performance, technical and cost effectiveness, trade offs and optimization, and functional and interface compatibility. HVAC includes both nonprotective and protective elements, such as hardened structures, reservoirs, tunnels, and penetrations.

*b*. In particular, the hardened air-entrainment subsystem (AES), which ensures the continuous or periodic transfer of air between the atmosphere and the facility, is covered in TM 5-858-5. The AES design includes ports, ducts and chambers, blast valves, dust removal devices, and booster blowers. The TM 5-858-5 also covers the design of fastener shock-resistant attachment/isolation of equipment/structures, penetration protection (access/egress or umbilical), hydraulic surge protection (circuits, reservoirs), and EMP protection.

*c*. TM 5-858-7 presents design guidelines for the facility support systems: power supply, waste-heat rejection, air quality control, utilities, and services. Each one of these has a direct impact on HVAC design which cannot be considered in total isolation but must be integrated in the total system-engineering approach.

(1) As an example, consider the total parasitic load which includes power for the coolant circulation pump, the refrigeration systems (largely compressors), and the air circulation fans. The parasitic load will often be dominated by fan power demand. As a result, at least a conceptual design of the HVAC is required to size the newer supply.

(2) The size of, the power supply in turn determines the power cycle heat rejection and the combustion air requirements. Both of these elements are part of the HVAC design, which must now be reevaluated to include these loads.

*d*. The air-conditioning (AC) of hardened 'structures aboveground is essentially designed like conventional AC to hold the interior temperature, relative humidity (RH), and air supply at levels and volumes suitable for the intended use of the space.

(1) Underground this holding phase is preceded by a so called conversion phase, due to the much longer time interval required to warm up or cool down the initial temperature and RH of the underground space to the desired levels. The process of conversion must include the simultaneous control of temperature and humidity. Neither the addition or extraction of heat alone, nor the use of ventilating air alone, will ordinarily be sufficient for conversion purposes within acceptable time frames.

(2) The latent dehumidification load is usually greater than the sensible load during conversion; however, the sensible heat rejected by the dehumidifiers will be reused to heat the space, except for refrigerated storage cool-down below initial temperature levels. During conversion the structure will not be used for either production or storage, except in cases of emergency.

*e*. In hardened structures, ventilation alone will not suffice since dissipating the heat with outside air quickly becomes impractical. Therefore, a minimum quantity of outside air will be introduced with provision for complete recirculation and some degree of AC to provide for a greater latitude in occupancy and operational loads. During the seal-up period, the recirculation and cooling of interior air will permit continued operation and occupancy that may otherwise be prohibited. AC systems will be kept simple and designed for minimum maintenance.

## 2-2. Makeup air.

*a*. The proper quantities of outside air required for personnel are determined by pressurization, air lock scavenging, occupant metabolism, and other special requirements, such as for smoke purge systems.

(1) Leakage of underground structures is inexistent, and above-ground a gastight enclosure is required to prevent air contaminants from infiltrating the facility under attack. Air lock scavenging requirements (discussed in chapter 6) are proportional to the time allocated to personnel ingress. Fresh air provisions for personnel support are to dilute body odors, tobacco smoke, cooking, and other products due to occupancy.

(2) The American Society of Heating, Refrigerating and Air Conditioning Engineers, Inc. (ASHRAE) Standard 62 lists minimum and recommended ventilation rates for various residential, commercial, industrial, and institutional structures. The normal allocation is 10 cubic feet per minute (cfm) per person for nonsmoking areas and 15 cfm per person for smoking areas. The lower limit for outside air ventilation is 5 cfm per person for maintaining proper carbon dioxide and oxygen levels.

*b.* In general it will be more effective to use an open ventilation system during the pre-attack time frame. The design of this system is similar to the ventilation systems found in conventional facilities, except that a hardened AES will be used to exchange air between the facility and the atmosphere. The AES is discussed in TM 5-858-5. Transattack/post-attack ventilation systems that communicate with the atmosphere must provide for the removal of insidious DB and other contaminants. This extremely difficult task will be avoided by using a closed ventilation system whenever possible.

*c.* Mechanical ventilation of underground installations is a necessity because natural ventilation is not practical for enclosed structures of facilities such as kitchens, dining areas, and lavatories. During normal periods of operation, there will be no recirculation of air supplied to kitchens, lavatories, toilet rooms, bathrooms, restrooms, and battery rooms. During seal-up, this air will be recirculated through carbon filters for odor removal. Recirculation of battery room air is permissible if batter charging operations are interrupted; otherwise hydrogen scrubbing will be provided. Air from decontamination areas will not be recirculated unless first passed through CB filters.

*d.* The ASHRAE recommendations for kitchens is at least 8 air changes per hour, but no less than 4 cfm per square foot of floor area. The quantities exhausted through hoods over ranges and other cooking devices will be sufficient to maintain a velocity of 60 to 75 feet per minute (fpm) through the projected area. For lavatories, toilet rooms, bathrooms, locker room, and restrooms, at least 4 air changes per hour but no less that 200 CFM, 7 cfm per locker, 25 cfm per water closet or urinal, 50 cfm per showerhead, or 2 cfm per square foot of floor area, whichever is greater.

*e.* Air supplied to offices and workrooms and exhausted via corridors will be used to ventilate toilets. For battery rooms, at least 1 cfm per charging ampere will be provided, but no less than 6 air changes per hour. Specific system applications covered in TM-5-810-1 are; administrative, community, storage, and computer facilities; research and development laboratories; and mechanical rooms.

## 2-3. Combustion air.

*a.* The proper quantities of outside air required for combustion processes are determined by the power supply and heat generators. Design guidelines for power supply are covered in TM-5-858-7. The diesel engine is the most likely prime mover for the power systems. Batteries and similar energy storage systems, which are bulky and have limited capacity, are practical only for the smaller shelters. Geothermal and nuclear-reactor-based power systems will only apply to the very largest facilities.

*b.* Space limitations and exorbitant combustion air requirements of coal and oil fired boiler plants for power generation all but eliminate these from consideration, especially in underground installations where combustion type boilers are excluded. For gasoline and diesel engine drives, air requirements per kilowatt (kW) are in the 4 to 7 cfm per kW range. For gas turbine drives, the range is from 9 to 13 cfm per kW.

*c.* Because outside air for personnel may be interrupted during the attack mode, combustion air for power generation must come from the structure itself or from an air intake structure separate from the air intake for personnel. Steam and hot water boilers may be used for heating and domestic hot water loads. These loads are usually expressed in British thermal units per hour (Btuh). For boiler combustion air estimating purposes, use 2.5 cfm per 10,000 Btuh. This combustion air requirement maybe combined with the personnel outside air requirements.

*d.* If a facility with an air-breathing power plant must be totally hardened, and if power production is required before, during, and after an attack, the air intake and exhaust equipment must remain operational at all times. The combustion air system will then include provisions to moderate the air inlet temperature and filter and scrub all dust and crater ejects from the prime mover combustion air.

(1) A typical installation would consist of a dry inertial dust separator to remove approximately 90 percent of dust particles 20 microns and larger, and a wet scrubber to remove 85 percent of dust particles 5 to 20 microns and to reduce the air inlet temperature in degrees Fahrenheit ( °F) to less that 150° F.

Normally, the engine will be equipped with a viscous impingement-type filter in the combustion air intake for normal operations.

(2) Design of hardened ports and combustion air duct work is covered in TM-5-858-5.

*e.* The location of combustion engines and other air-consuming equipment is also of primary importance. Such equipment will be provided with a closed system with its own filtered air, or so located within a structure that the filtered air required for personnel will exhaust through the equipment area and be used for combustion. In an occupied structure without benefit of fresh air, any equipment requiring air for combustion will soon create an untenable condition within the structure. Such equipment will be isolated and provided with its own air supply and exhaust.

## 2-4. Vitiated air.

*a.* A concentration of 0.5 percent carbon monoxide in the air can cause death after one hour. The gas from a high explosive bomb can contain from 60 to 70 percent carbon monoxide. The air intakes and exhausts of a facility under attack will be sealed to protect against any such weapon effects. The length of time a facility must remain sealed up in the attack mode without rejuvenation of air will be determined during criteria development. Limiting parameters are temperature and humidity rise, oxygen depletion, and carbon dioxide buildup. These factors reviewed below are further discussed in the ASHRAE Handbook, Application.

*b.* The temperature and humidity rise in occupied unventilated spaces may be estimated by the methods of chapter 3. The particular case of an underground facility isolated for one week is considered in problem 5, paragraph 3-9e, using sedentary personnel metabolic emission rates (shown in table 2-1) as the sole source of heat build up in the space. Depending on initial and boundary conditions it is estimated that during the isolation period personnel will be exposed to temperature of 80° F to 90° F with humidities approaching 100 percent. This is not beyond human endurance, but is beyond the range at which work with paper, instruments, or electronic equipment can be reliably accomplished.

*c.* The hourly oxygen depletion rate under perfect mixing conditions is the ratio of the individual oxygen consumption $V_{02}$ in cubic feet per hour (cfh) to the space volume per capita V in cubic feet. As a result, after t hours (h) of isolation, the oxygen volume fraction $[0_2]$ drops from the initial 21 percent normally present in the air to

$$[0_2] = 0.21 - t(V'_{02} / V_c) \qquad \text{(eq 2-1)}$$

*d.* The hourly carbon dioxide buildup rate under perfect mixing conditions is the ration of the individual carbon dioxide production V' in cfh to V. As a result, after t hours of isolation, the carbon dioxide volume fraction [CO] will rise from the initial 0.3 percent normally present in the air to

$$[CO_2] = .003 + t(V'_{02} / V_c) \qquad \text{(eq 2-2)}$$

*e.* Table 2-1 shows the various quantities of air, oxygen, and carbon dioxide used or given off under various conditions.

(1) Variation of oxygen levels between the normal 21 percent and 17 percent are acceptable, but carbon dioxide buildup is more serious because it acts on the human nervous system to maintain involuntary respiration. TM 5-858-7 indicates that hyperventilation and increased oxygen consumption will start above the 1 percent level and that carbon dioxide concentrations higher than about 4 percent are toxic.

(2) If in the problem of b above, $V_c$ = 1,500 cubic feet per seated occupant each releasing 0.67 cfh of carbon dioxide, then equation 2-2 shows that the 4 percent critical carbon dioxide level is reached after only 90 hours, at which point the oxygen consumed at the faster rate of 0.8 cfh has also dropped (equation 2-1 ) below the 17 percent acceptable oxygen level. In other words, the occupants of the shelter will die asphyxiated long before their scheduled rescue (after 192 hours of isolation) unless air-regeneration processes are used.

*f.* A number of materials for chemically rejuvenating the air are given in table 2-2. These materials are useful for relatively small capacity carbon dioxide removal requirements. These regeneration processes also liberate heat and moisture as indicated. Their contribution to the latent and sensible heat load will be taken into account in the design.

(1) As a rule oxygen will be provided under pressure in bottles, but small quantities of oxygen may be generated by burning special chlorate candles. Oxygen to be generated or released can be estimated based on 0.89 cfh per person.

(2) For large-capacity carbon dioxide removal, counter current wet scrubbing with a sodium hydroxide solution is recommended in TM5-858-7, on the basis of reactant and low heat of reaction.

(3) Further discussion of air quality control is also covered in of TM 5-858-7.

TABLE 2-1

Typical Personnel Metabolic Rates

| Physical Activity | Energy Expenditure, Btu/h | Oxygen Consumption, cfh | Carbon Dioxide Production, cfh | Rate of Breathing cfh |
|---|---|---|---|---|
| Prone, at rest | 300 | 0.60 | 0.50 | 15 |
| Seated, sedentary | 400 | 0.80 | 0.67 | 20 |
| Standing, strolling | 600 | 1.20 | 1.00 | 30 |
| Walking, 3 mph | 1000 | 2.00 | 1.67 | 50 |
| Heavy work | 1500 | 3.00 | 2.50 | 75 |

TABLE 2-2

Properties of Air Regeneration Chemicals

| Chemical[5] | Carbon Dioxide Absorbed $ft^3/lb$ | Oxygen Liberated $ft^3/lb$ | Water Vapor Freed lb/lb | Sensible Heat Load Btu/lb | Latent Heat Load Btu/lb | Chemical Use Per man hour[6] lb/mh |
|---|---|---|---|---|---|---|
| Lithium[1] Hydroxide | 6.74 | N/A | .375 | 1,011 | 482 | .124 |
| Cardoxide[2] (soda-lime) | 2.82 | N/A | .240 | 380 | 308 | .340 |
| Baralyme | 1.56 | N/A | .116 | 200 | 150 | .474 |
| Sodium Superoxide | 2.88 | 3.94 | N/A | 1,190 | N/A | .288 |
| Potassium[3] Tetroxide | 2.28 | 3.27 | N/A | 815 | N/A | .364 |
| Chlorate[4] Candle | N/A | 4.15 | N/A | 390 | N/A | .240 |

1. 21.6 lb canister with 80 cfm blower @ 2.5 in. wg will last 2 hours
2. Irritating dust
3. 15 lb canister requires 50 cfm blower and will last 1.5 hours
4. Cast block 4-3/4 in. dia. 10 in. long sodium chlorate, iron powder, glass fiber, and barium peroxide must last 1 hour
5. These chemicals, if used, should be handled and stored with special caution. In particular, sodium superoxide and potassium textroxide are strong oxidizing agents and can be fire hazards. This fact may preclude their use in some cases. Chlorate candles should come packaged specifically to avoid fire hazard.
6. Based on 1 cfh $O_2$ and 0.83 cfh $CO_2$ per capita and forced air flow through the scrubbing chemicals (except chlorate candle).
7. N/A = not applicable.

## 2-5. Temperature and humidity.

*a.* Temperature and humidity of an occupied space have a direct effect on the occupants. A comfortable environment is essential for personnel who perform duties which demand reliable judgement and mental or physical stamina. Psychological stresses are likely to be present in individuals stationed in an underground structure under attack or alert. Where personnel efficiency is the prime consideration, TM 5-858-7 recommends 73 °F ± 1 °F effective air temperature, 80 °F + 2 °F dry-bulb air temperature, and 50 percent RH (optimum for control of air-borne bacteria). For additional guidelines refer to TM 5-810-1, and ASHRAE Handbooks.

*b.* Where operating equipment is the important consideration (electric racks, gyroscopic and celestial navigation equipment, laser missile tracking devices, and other similar equipment) temperature, humidity, flow, pressure, cleanliness, and other cooling air requirements will be designed in accordance with the equipment manufacturer's recommendations.

*c.* Information on the relation between humidity and deterioration of stored materials is shown in table 2-3. The data indicated the necessity for a low humidity for the preservation of unprotected carbon steel. As a result of these tests and other consideration, a RH of 35 percent was chosen for the interior of many ships place in storage. The 35 percent figure is considerably below the demonstrated tolerance of many materials, but it affords a factor of safety against equipment failure and against sharp temperature changes that might cause condensation on some objects when the temperature is uncontrolled.

*d.* Excessive dryness is harmful to certain materials, such as commutator brushes in electric motors, paper, excelsior, straw, leather, hemp rope, wood furniture, and dry-cell batteries. Recommended air conditions for storage of propellants will not exceed 60 percent RH with dry bulb temperature kept between 50 "F and 600 F. The AC equipment for explosive storage chambers will be selected with reference to minimizing pipe and duct runs. Where human occupancy is infrequent, little or no ventilation will be required. Equipment capable only of dehumidifying and moderately heating such chambers may be adequate in such situations.

TABLE 2-3

Humidity Tolerance of Selected Materials

| Item | A | B | C | Nature of Damage |
|---|---|---|---|---|
| Mild steel, polished, unprotected | 15 | 30 | 65 | Rust |
| Steel (ball bearings, rust preventive applied by manufacturer) | -- | 65 | 90 | Rust |
| Steel (ball bearings, heavy polar composition) | -- | 65 | -- | |
| Alloy steel | -- | 90 | -- | |
| Galvanized steel | -- | 65 | 90 | Tarnish and rust |
| Brass and Bronze | 15+ | 90+ | -- | Tarnish |
| Aluminum and its alloys | -- | 90+ | -- | Tarnish |
| Rubber, plastic, rayon | -- | 90+ | -- | Mildew |
| Flax, wool, cotton, hair, leather, sponge, hemp, sisal, paper, wood | -- | 65 | 90 | Mildew |
| Soap, bars | -- | -- | 90 | Disintegration |
| Tinned cans (canned food) | -- | 45 | -- | |
| Cloth (life preserver) | -- | 65 | 90 | Rotting of cover |
| Paint brushes | -- | 65 | -- | |
| Small arms, lubricated | -- | 65 | 90 | Mildew and rust |
| Instruments (clocks, gages, voltmeters, telescope, etc.) | -- | 45 | -- | |

Deterioration at indicated percent RH and uncontrolled dry-bulb temperature after a 30-month period; A = imperceptible, B = Very slight, C = Intolerable

U.S. Naval Industrial Test Laboratory Report 3014A, Philadelphia Navy Yard (April 1949)

## 2-6. Internal loads.

*a. Electric motor driven equipment.* The heat equivalent of one horsepower (hp) is 2545 Btuh, and a machine rated at K brake horsepower (bhp) dissipated heat at the rate $q_e$ in Btuh.

$$q_e = 2545\,(K) \qquad \text{(eq 2-3)}$$

This power, delivered by the motor, is a fraction of the motor input. This fraction is by definition the full load efficiency E of the motor and the motor input equivalent $q_i$ in Btuh is then

$$q_i = 2545\,(K/E) \qquad \text{(eq 2-4)}$$

The heat dissipated by the motor alone is the balance between motor and shaft input $q_m = q_i - q_e$ and in Btuh.

$$q_m = 2545(K/E)\,(1-E) \qquad \text{(eq 2-5)}$$

The efficiency of fractional horsepower motors increases with the rated power from a low 35 percent to a maximum of 76 percent. For estimating purposes the heat emitted by fractional horsepower motors is:

$$q_m = 800(K)^{.31} \qquad \text{(eq 2-6)}$$

From 1 to 250 hp, the efficiency continues to improve to reach a maximum of 94 percent. The approximate heat emitted by motors in that range is:

$$q_m = 800(K)^{.78} \qquad \text{(eq 2-7)}$$

The heat emitted by the motor or the driven machine must be allocated to the spaces or air stream where they are respectively located. If the shaft goes through a partition, these spaces may not be the same. The preceding calculations are valid for continuous operation. For intermittent operation an appropriate usage factor should be used and preferable measured.

*b. Lights.* Energy from electric lights is converted into heat. The heat equivalent of a watt (W) is 3.41 Btuh. The instantaneous lamp heat emission is the product of the heat equivalent of the total lamp wattage and a use factor which is the ratio of the wattage in use to the wattage installed. To this must be added the heat radiated by the ballast, which is usually 20 percent of the lamp heat emission. It bears repeating that the heat emitted by the fixture and the ballast must be allocated to the respective space or air stream where the heat is actually radiated. These spaces are not the same in the case of a false ceiling or when the fixtures are recessed or used for air return, and only a portion of the lamp heat reached the room it lights. This information should be supplied by the fixture manufacturer.

*c. Occupant.* Personnel emit sensible and latent (moisture) heat in the room. The individual emission rates depend on clothing, activity level, sex, age, room temperature T, and other factors influencing the person's metabolism. On the average the sum total $q_t$ of the sensible and latent heat emission rate per capita is 400 Btuh for sedentary activities and 660 Btuh for light work. For design purposes the sensible heat rate $q_s$ is 320 Btuh up to 68 F ambient, zero above 100 F, and between these limits computed according to equation 2-8.

$$q_s = (10)\,(100-T) \qquad \text{(eq 2-8)}$$

TABLE 2-3

Humidity Tolerance of Selected Materials

| Item | A | B | C | Nature of Damage |
|---|---|---|---|---|
| Mild steel, polished, unprotected | 15 | 30 | 65 | Rust |
| Steel (ball bearings, rust preventive applied by manufacturer) | -- | 65 | 90 | Rust |
| Steel (ball bearings, heavy polar composition) | -- | 65 | -- | |
| Alloy steel | -- | 90 | -- | |
| Galvanized steel | -- | 65 | 90 | Tarnish and rust |
| Brass and Bronze | 15+ | 90+ | -- | Tarnish |
| Aluminum and its alloys | -- | 90+ | -- | Tarnish |
| Rubber, plastic, rayon | -- | 90+ | -- | Mildew |
| Flax, wool, cotton, hair, leather, sponge, hemp, sisal, paper, wood | -- | 65 | 90 | Mildew |
| Soap, bars | -- | -- | 90 | Disintegration |
| Tinned cans (canned food) | -- | 45 | -- | |
| Cloth (life preserver) | -- | 65 | 90 | Rotting of cover |
| Paint brushes | -- | 65 | -- | |
| Small arms, lubricated | -- | 65 | 90 | Mildew and rust |
| Instruments (clocks, gages, voltmeters, telescope, etc.) | -- | 45 | -- | |

Deterioration at indicated percent RH and uncontrolled dry-bulb temperature after a 30-month period; A = imperceptible, B = Very slight, C = Intolerable

U.S. Naval Industrial Test Laboratory Report 3014A, Philadelphia Navy Yard (April 1949)

## 2-8. Moisture loads.

*a.* Evaporation of water from damp surfaces or open pools into the air requires heat. At normal room conditions the latent heat of evaporation is approximately 1050 Btu per pound of evaporated water. The latent heat of evaporation is transferred by the resulting vapors from the wet interface to the place where the vapors recondense. Water vapor in the air will recondense on any exposed surface at a temperature below the air dewpoint.

*b. The* vapor pressure $P_w$ of the water, in pounds per square inch absolute (psia), increases rapidly with the temperature T in 1? according to the Tentens formula.

$$P_w = (,0886)\exp[(17.2694)(T-32)/(395.14+T)] \qquad \text{(eq 2-10)}$$

The saturated vapor pressure $P_s$ of air at dry-bulb temperature $T_a$ is computed by setting $T = T_a$ in equation 2-10. The actual vapor pressure Pa of the air is then computed from its known relative humidity which, by definition, is the ration of $P_a$ to $P_s$. The air dewpoint temperature $T_b$ is also computed from equation 2-10 by setting $P_w = P_a$ and using parameter $P^* = 1n\ (P_a/.0886)$ as follows:

$$T_b = (395.14)(1.3985+P^*)/(17.2694-P^*) \qquad \text{(eq 2-11)}$$

*c.* The driving force for evaporation from a wet surface is the saturation deficit ($P_s - P_a$), which is positive above the air dewpoint. Air movement is also a factor since it prevents vapor buildup and saturation of the air above the evaporating surface. For a surface L feet long with air flowing parallel to it at a velocity v in fpm, the average mass transfer coefficient in lb/h ft $^2$ per psi saturation deficit is approximately:

$$G_p = (v/1538) + (.22/L)\,[1 - \exp(-vL/135)] \qquad \text{(eq 2-12)}$$

The mass flux m in 1b/h ft $^2$ of water evaporated is then:

$$m = G_p\,(P_s - P_a) \qquad \text{(eq 2-13)}$$

The latent heat flux in Btuh/ft$^2$ corresponding to m is approximately:

$$q = 1050(m) \qquad \text{(eq 2-14)}$$

For more complicated interface geometries, $G_p$ is computed by analogy with the heat transfer coefficient h' in Btuh/ft $^2$F, using the Lewis relation for moist air at 14.7 psi absolute pressure, 0.24 Btu/lb F specific heat, and 0.622 water to air molecular weight ratio.

$$G_p = (.622/14.7)\,(h'/.24) = .18(h') \qquad \text{(eq 2-15)}$$

*d.* Underground, the computation of moisture loads will be based on site specific data. A site survey will determine the amount of water entering trough fissures, collected in pools, and the excess water to be drained or pumped away. Determining rock seepage and other hidden or intermittent sources will require extended observations. Moisture from equipment, materials, processes, personnel, fresh air, infiltration from uncontrolled areas, and other sources will be included in the design. Experience indicated that failure to account for these loads disrupts the entire humidity control process.

The latent heat rate $q_l$ is by definition the balance between the total and sensible heat rate above or:

$$q_l = q_t - q_s \quad \text{(eq 2-9)}$$

For other condition the ASHRAE Handbook, Fundamentals, must be consulted.

*d. Kitchen.* Cooking is responsible for both sensible and latent loads. Appliance surfaces contribute most of the heat in kitchens in the form of radiant energy. Appliance heat loads are detailed in ASHRAE, Fundamentals.

(1) If the appliance is under an exhaust hood, the maximum heat released to the kitchen due to radiation is estimated at 32 percent of the rated heat input. With a 50 percent factor for diversity and the effect of thermostatic controls, the average heat emission in the room is then 16 percent of nameplate rating in Btuh, and the balance or 34 percent goes to the hood exhaust stream.

(2) For direct fuel fired appliances, a correction factor must be applied because they require 60 percent more heat input than electric or stream equipment of the same type and size, and the heat radiated in the kitchen is only 10 percent of the rated Btuh input.

(3) For all cooking appliances not installed under an exhaust hood, the heat gain maybe estimated at 50 percent of the rated input regardless of the type of energy or fuel used. It may be assumed that 34 percent of the heat is latent and 66 percent is sensible.

*e. Engines.* For diesel and gasoline engines, the only heat gain to be considered as internal load is the radiated load, estimated at 370 to 400 Btuh per bhp. The heat transferred to the cooling water is covered in chapter 5. For boilers, the heat radiated intro the conditioned space will be dependent on the temperature difference between the interior of the boiler and the conditioned space, the overall coefficient of heat transfer of the boiler plate and insulation, and the surface area of the boiler. This heat gain will have to be calculated for the specific boiler selected. Proper selection of insulation can reduce this load to a minimal amount.

*f. Miscellaneous equipment.* Other equipment using power such as computers, radar, and communication equipment will also produce a heat gain based on its specific characteristics as indicated by the manufacturer.

## 2-7. External load.

*a.* The sensible and latent heat transfer between the space and its surroundings constitute the external load. Aboveground, the ambient air is the dominant factor. Solar radiation's influence is always indirect because of the absence of fenestration in hardened structure. In addition, the thickness of the walls will reduce considerably the propagation of the external daily temperature variations to the inside spaces.

*b.* Moisture seepage through boundaries aboveground will be eliminated just as it is for conventional structures; however, the designer should be aware that the thermal parameters of the overburden used in mounded-over structures, for instance, are sensitive to moisture content and therefore dependent on local precipitations, regardless of the drainage and moisture barrier provided.

*c.* Underground, the structure's environment will, by contrast, vary in texture, contain fissures or faults, and be subject to hidden hydrostatic and thermal influences. Heat transfer from this environment is covered in chapter 3. Temperature variations in the underground environment are relatively small over a period of time compared to the wide ranges of seasonal variations which affect an aboveground structure.

*d.* The intrusion of moisture into the underground structure is much more unpredictable and difficult either to measure or control than in the aboveground structure. Therefore, the design of the AC system for the underground structure will anticipate relatively constant temperature levels but varying moisture conditions. Each site will present a unique series of geologic and geographic conditions. No uniform design procedure can be applied universally to all sites.

*e.* The underground environment is exceptionally dominated by the movement of groundwater around the space; but the usual assumption is that this percolation will not eliminate conduction from consideration and that both transfer mechanisms can be evaluated separately.

when fresh filtered air cannot be supplied, this continued recirculation of air will extend the time of occupancy.

*c. Air motion.* Air motion in comfort air-conditioned spaces should be at a design rate of 50 fpm. In areas where people will be seated, such as in offices, control rooms, and personnel support areas, room air motion should be ,between 25 and 35 fpm.

*d. Fire protection.* The designer of HVAC systems for hardened structures will take special precautions to prevent the spread of fires through ducts and shafts.

(1) Fire dampers and smoke detectors will be installed in all duct systems in accordance with National Fire Protection Association (NFPA) publication 90A. In the event of a fire, flow of smoke from the fire zone will be inhibited from spreading to required interior ways of exit access, interior enclosed stirs and ramps, passageways, and designated refuge areas.

(2) Smoke control and purge systems will be included as an integral part of the HVAC systems. Such systems will involve HVAC systems alone or in combination with other systems such as emergency venting, pressurizing systems, and fire suppression systems and are covered in the ASHRAE Design of Smoke Control Systems for Buildings.

*e. Radio frequency interference (RFI) protection.*

(1) Supply and return air ducts serving rooms with sensitive electronic equipment will be equipped with RFI filters to prevent transmission of RFI into the electronic equipment room. This RFI protection requirement is usually included in the design criteria.

(2) To maintain the attenuation of the RFI shielded room at the prescribed level, a waveguide filter will be installed in the duct which will result in attenuation equal to the center area attenuation of the room. The air-duct wave guide filter will be specified in terms of the attenuation over a specified range of RFI frequencies and the allowable air pressure drop across the filter in accordance with TM 5-855-5 and TM 5-858-5.

*f. Internal structures.*

(1) To conserve space an internal structure will be cooled by utilizing the annular space between the structure and surrounding rock as a cold-air plenum held at or near the initial rock temperature. The cool air in the annular space plenum is distributed into the internal structure to maintain the desired interior conditions.

(2) Air from the internal structure, except for that exhausted, will be discharged directly into the annular space through a cooling coil that lowers the air temperature to that of the surrounding rock. Leakage of air between the plenum and access passageways will be prevented to avoid discharge of cold air into warm passageways.

## 2-10. Chemical, biological, and radiological (CBR) protection.

*a. General.* Protection against CB agents and radiological fallout will be provided if the facility is to continue to function regardless of attack. There are not varying degrees of CBR protection, and it will be continuous if the effects of covert attack are to be reduced.

(1) Air filtration, pressurization, and personnel decontamination are the three basic principles of CBR protection. Radiation shielding and CBR detection are not part of this manual. Entrances and decontamination facilities (covered in chapter 6) will permit egress and ingress without endangering the occupants of the facility.

(2) CBR agents may occur as gases, liquids, or solids and can be airborne, waterborne, or surface contaminants. Airborne agents are chemical toxic gases and CB aerosols. Surface contaminants are too heavy to remain suspended in the air. They can be either liquids or solid. Liquids may be chemical or biological agents. Solid contaminants may be biological or radiological agents.

*b. Pressurization.*

(1) Dependable exclusion of airborne agents is ensured by sealing possible leakage sources, providing pressurization, and filtering the makeup air. The internal overpressure P in inches of water (in. wg) needed to prevent infiltration from winds of velocity v in miles per hour (mph) is 110 percent of the velocity head equivalent of the wind or

$$P' = 0.85(v/40)^2 \qquad \text{(eq 2-16)}$$

(2) Air input needed to achieve the desired overpressure is determined by the exhaust and leakage rate of the installation and is independent of the size of the installation. Contaminants are effectively removed from air by passing them through a standard filter unit developed by AMCCOM-CRDC. After

*e.* Evaporation from damp rock affects the humidity in bare chambers. Initially, when the chamber is first warmed, the rock surface is below the air dewpoint. Moisture from the air condenses on the rock, adds to the existing seepage, and reduces the room latent load. The latent heat of condensation released adds to the sensible heat flux penetrating the rock. Upon continued heating, the rock surface temperature rises. When the surface temperature is above the air dewpoint, part of the air sensible heat is converted and used to evaporate some of the seepage at the rock surface, thus reducing the heat flux penetrating the rock. The moisture added to the air increases the room latent load.

*f.* Vapor barriers or thermal insulating materials in direct contact with rock surrounding underground spaces are not generally recommended.

(1) Hydrostatic pressures generated because of the depth of an underground chamber are greater than can be restrained by ordinary vapor barrier materials or even by moderately heavy concrete liners. Hydrostatic heads up to 43 psi could develop 100 feet below the water table depending on the over-burden permeability.

(2) Insulating material applied directly to rock walls or to concrete in contact with such walls is likely to become wet, either by condensation or from ground water or both, with possible damage to the insulating materials or to the fastenings.

(3) A concrete liner may be installed in an underground space to improve the appearance or to reduce the chances of spalling, but should not be considered effective either as thermal insulation or as a vapor barrier. The dehumidification load in such a space is the same as that for a bare chamber.

*g.* If the walls, ceiling, and floor of an internal structure are vapor proof, the water vapor to be removed is equal to that liberated by the equipment and personnel within the structure. Conditions in the annular space do not directly affect conditions within the structure. If the walls, ceiling, and floor of the internal structure are pervious, the water vapor to be removed is the sum of the water vapor liberated by personnel and equipment and that entering the internal structure through the walls, ceiling, and floor by permeation or by convection from the annular space.

## 2-9. Air distribution and fire protection.

*a. General configuratwn.*

(1) A central AC! system has the advantage of lower chilled and hot water piping first-cost and lower noise generation when the unit is remote from the conditioned spaces. Disadvantages are large, long ducts, inflexibility under moderate load, and the inherent unreliability of a single system when compared to installation of multiple units.

(2) On the other hand, using a large number of self-contained air-conditioners , one for each room or zone, simplifies the zoning and control problems, improves the overall reliability, and avoids the use of large, long insulated ducts. Noise may be a problem if such equipment is used because human occupants may be situated near the source of the noise. Self-contained air-conditioners include condensing units in pre-assembles cases. For underground use, these condensers will be water cooled.

(3) Fresh air will be ducted to the return side of the air-conditioner in proportion to the population in the room or zone being conditioned. This allows the air to be tempered or bypassed through a conditioning coil before entering the occupied space..

(4) Self-contained air-conditioners will be furnished with hot water or steam coils when heating is required or arranged to serve as heat pumps and, thus, warm as well as cool and dehumidify spaces when required. Most of the heat for warming a space with a heat pump arrangement is taken from the water used at other times to cool the condenser.

*b. Distribution.* Prior to design of the air distribution system, the designer of HVAC systems for multi-room structures will analyze the requirements for each room. Areas containing odors, toxic vapors, dust, and other contaminants will be designated as contaminant areas. All other areas will be designated as non-contaminant areas.

(1) Contaminant areas will be maintained at a lower pressure relative to adjacent rooms to ensure that contaminants generated within the area will not escape to other areas. To obtain the maximum utilization of ventilating air, exhausts from toilets, and kitchens (properly degreased) will be discharged into unoccupied equipment rooms.

(2) Filtered air will be distributed in a manner to give the most effective results in providing uniform air quality for occupants. Filtration requirements will be specified as a function of the location of the facility and the air quality required to accomplish its mission. A duct system will be used wherever feasible, except between areas or rooms where pressure differences are to be maintained.

(3) In structures not provided with central AC or air-handling equipment, circulation or recirculation of air can be obtained by the proper placement of floor or wall fans. During seal-up periods

hardened AES covered in TM 5-858-5. Any questions regarding the types of prefilters that should be used in a particular system will be referred to AMCCOM.

(5) The filter units will be installed in a readily accessible location and be provided with an overhead hoist for periodic removal and replacement. The filters will be located as close as possible to an exit and remote from the occupied portions of a structure. In structures not provided with blast protection, — the filter units will be located outside the structure in the vicinity of the main air intake.

(6) When filters are located outside a structure or in an otherwise contaminated area, the supply fan will be place on the influent side of the filters to preclude the infiltration of contamination in the event of system leakage. When filters are located inside a structure or in an otherwise clean or protected area, the supply fan will be place on the eflluent side of the filters. This arrangement will eliminate the infiltration of contamination since any leakage will be that of clean air.

(7) All intake air will be filtered continuously unless the total requirements necessary for normal operations of a structure make such filtration uneconomical. Automatic CBR detection devices cannot be relied upon to put the CB filters on the line when bypassing these filters is allowed; this operation will have to be accomplished manually at the start of the alert and in advance of pending attack.

(8) Normally, a standby system of filter units identical to the main units will be installed for occasions when the filters become contaminated and require replacement and when such replacement cannot be accomplished by shutting down the fresh-air supply. In certain important structures, such as deep buried ones, the standby filters will be on a completely separate system of supply fans and intake shafts in case one system becomes inoperable as a result of equipment failure or air-intake shaft damage. In other instances the standby filters may be stored in readiness for replacement rather than being initially installed in the duct system. The methods of providing standby filter units will depend on the importance of the mission to be accomplished within the structure as determined by the using agency.

g. *Filter equipment room.* A separate area or room will be provided for the air-filtering equipment, and when AC is required, portions of the AC equipment will also be placed in this room. This room will be pressurized with clean air, and the filter units and fans will be arranged so that any leakage into the room will be that of clean air. The refrigerant compressors and evaporative condensers of any AC system will be placed outside the pressurized area in order to reduce heat buildup, filtered-air requirements, and possible refrigerant leakage.

*h. Protective closures.*

(1) Protective closures are required at air intake and exhaust openings, plumbing vents, or other openings to the atmosphere to prevent a pressure buildup within the facility greater than 2 psi above atmosphere pressure. Blast closures, valves, ducts, attenuation chambers, debris traps, penetration protection, and hydraulic surge protection are covered in TM 5-858-5.

(2) In view of the complications involved in design and the variations in requirements for protective closures in a single given structure, it is strongly recommended that the entire system of air intakes and exhausts, soil vents, boiler stacks, engine combustion intakes, and exhausts be designed to reduce the number and types of closures required. This will be accomplished by consolidating a variety of exhausts or intakes into a common plenum having its own protective closure.

passing through the filter, the air is collected and distributed within the installation by means of a supply fan and a suitable duct system. Air distribution strategies given in the preceding paragraph will maximize its utilization.

(3) Control of exhaust air and sealing air leaks will provide a degree of pressurization. Exhaust air control is achieved by poppet valves or other valves calibrated to permit a fixed flow of air under pressure or by volume control dampers on exhaust fans. The valves will be located as far as practicable from the fresh air intake to provide a good circulation of air through the installation. Exhaust air control of entrances is discussed in chapter 6.

*c. Air scrubbing of openings.* Many CB contaminants will tend to concentrate in subsurface openings such as shafts and cut entrances. Such openings will be sealed off at or above ground level. For some kinds of openings, such sealing will be impossible. To prevent or reduce the build-up of contamination, provision should be made to scrub the openings with exhaust air from the tunnel or by other means. Scavenging air of decontamination facilities are discussed in chapter 6.

*d. Exclusion of solid and surface contaminants.*

(1) Surface contaminants can enter an underground installation either by falling into openings or, after they have been deposited on the ground, by being carried in accidentally by personnel or vehicles. Shielding over openings will prevent such contaminants from falling into the installation. Offsets in shafts are not enough protection against this danger, for they require that the contaminants be removed or decontaminated, and until decontamination there is danger that the contamination may be moved on into the installation.

(2) Dust removal devices are covered in TM 5-858-5, but ease of removal and disposal of contaminated media must be considered in the equipment selection. In this respect, dry type traveling curtain air filters are preferred to fabric-bag dust separators.

(3) Prevention of contamination by surface contaminants carried into the installation is a matter of detection and decontamination. Decontamination is covered in chapter 6.

*e. Air intakes.*

(1) At least two air intakes will be provided whenever possible and given a maximum separation to reduce the possibility of both intakes being destroyed by a single explosion. Each intake shaft will be capable of handling the total air requirement of the installation with a minimum friction loss and will extend above the structure or earth in such manner as to preclude areas of possible high concentration of contamination.

(2) Air intake cross sections will vary from 1 to 5 square feet with the larger shafts used also as normal air intake for ventilation and AC of occupied areas. For these areas, the incoming air must pass through chemical filters prior to entering the distribution or conditioning equipment. Bypass of these CB filters will not be allowed.

(3) Should it be necessary to duct contaminated air through protected areas within a structure, it is essential that the internal duct pressure be less than that of the area through which it runs. This condition will permit an inward flow of air into the duct in the event of a leak. Design of intake ports is covered in TM 5-858-5.

*f. CB filters.*

(1) The filter units developed by AMCCOM-CRDC, described herein are a development of Aberdeen Proving Ground, will be installed in all military structures that are to be provided with CBR protection. HVAC designer will specify component particulate and gas filters, only as listed in table 2-4 and 2-5. When properly installed, these filter units will provide maximum protection against CBR contaminants that may enter a structure through the ventilation air intake.

(2) The CB filters are composed of two units in series, one unit being a dense water-repellent paper for the retention of particulate matter, which is the basic carrier of biological and radiological contaminants. The second unit is an activated carbon unit for the adsorption, retention, and neutralization of chemical agents.

(3) As no neutralization of the biological and radiological contaminants can occur, the filter units may become a secondary hazard to personnel in the immediate vicinity of the filter units. The construction of the filters does not provide for the required radiation shielding. As a rule and for an airflow V' in cfm, the shield surface density in pounds per square foot (psf) will be within 20 percent of $(12.6\,(V')^{-3.})$. Shielding of the filters and the operating procedure to protect personnel when removing contaminated filters will be coordinated with AMCCOM.

(4) Provisions will be made to transfer contaminated filters to the outside without moving through protected areas. Proper location and installation of CB filters must be coordinated with the design of the

## 2-11. Economic factors.

*a. Space utilization.*

(1) The selection and operation of equipment within a hardened facility are governed primarily by requirements other than economy, especially underground. The economics of equipment selection and operation will be compromised where dictated by facility mission requirements. The HVAC designer will review the equipment configuration and space allocation to provide a familiarity with maximum utilization of excavated space, minimum consumption of energy, and optimum hardness design to ensure successful completion of the mission.

(2) Trade-offs must be made in efficiency and noise when using smaller ducts with higher velocities and small high capacity equipment such as fans, coils, and boilers. Noise will be kept within limits set by Occupational Safety and Health Administration (OSHA); however, for each space, and where necessary, such design consideration as grouping and isolation of equipment and noise attenuation will be provided for maximum utilization of space.

*b. Economy of operation.*

(1) Facilities designed for uninterrupted power have continuous operation prime movers. Waste heat from jacket water and engine exhaust will be recovered to heat the facility and domestic hot water. Lube oil heat recovery may also be practical. In a gas turbine cycle, the thermal efficiency is approximately 12 to 60 percent with the remainder of the fuel energy discharged in the exhaust or through radiation. A diesel engine rejects approximately 30 percent of the input fuel energy to the jacket water and 30 percent to the exhaust gases.

(2) Practically all the heat transferred to the engine jacket water can be utilized but exhaust heat recovery is limited to 300 F leaving gas temperature to prevent condensation of water vapor and acids in the exhaust piping. Depending on the initial gas temperature, approximately 50 to 60 percent of the available exhaust heat can be recovered. Heat recovery methods are covered in detail in the ASHRAE Handbook, Systems.

(3) In frigid and temperate climatic zones, air-to-air heat exchangers or heat pipes will be installed in outside air and return air ducts for sensible heat reclamation. Where conditions permit, duct-mounted rotary air desiccant wheels will be installed in air-conditioning exhaust and outside air ducts for latent and sensible heat recovery.

(4) Where facility hardness requirements and interior humidity design conditions permit, outside air will be used to cool the facility when ambient dry-bulb temperature is 640 F or lower.

(5) Where high-radiant, heat-producing equipment, such as ovens, furnaces, and infrared devices are to be installed, consideration will be given to isolating such equipment by the use of metal panels through which water at normal temperature is circulated to carry off this high heat, thus reducing the load on the air-conditioning system. Similarly, the selection of liquid coolant-type power units, having water jackets through which either water at normal temperatures or condenser water can be circulated, will reduce the load on the "air-conditioning system.

## 2-12. Survivability and reliability.

*a. General.* Survivability and reliability of hardened structures are discussed in TM 5-858-1. By way of illustration, some of the HVAC applications of these considerations are included in this manual. Heating and Air-conditioning equipment installed in hardened facilities will be of such design or otherwise protected to withstand the shock (ground motion) and overpressure effects of weapons. Experience with the ballistic missile programs has proven that standard air-conditioning equipment can be utilized in hardened facilities if properly designed and protected.

*b. Redundancy of equipment.*

(1) Systems requiring a high degree of reliability will include redundant units which will automatically start and maintain the load should the operating unit fail. The required degree of reliability is based on the function of the facility, allowable downtime for critical systems, type of facility operation (continuous or standby), type of system operation (remote or local), and degree of maintenance.

(2) Fans and pumps in critical HVAC systems will be installed in multiples of two or three. The degree of reliability will determine whether units will be installed in multiples of two with each unit designed to carry 100 percent of the load or in multiples of three with each unit designed to carry 50 percent of the load.

(3) Controls will be arranged to keep one of the units in near new condition, operating it only as required for maintenance. In some cases, bypasses for control valves will be required for AC reliability where single AC units are used. Remotely operated valves in critical fluid systems will require two valves in a series to ensure reliability of facility isolation during the button-up phase. Computer cooling

TABLE 2-4

Particulate Filters

| CRDC Model No. | Rated Capacity (cfm) | Dimensions H (in) | W (in) | L (in) | Net Weight (lb) | Pressure Drop (in. wg) | National Stock No. |
|---|---|---|---|---|---|---|---|
| C18R1 | 600 | 24 | 24 | 6-1/8 | 18 | 1.00 | 4240-901-8119 |
| C19R1 | 1200 | 24 | 24 | 11-1/2 | 40 | 1.75 | 4240-901-8118 |
| C30R1 | 2500 | 24 | 46-1/2 | 11-1/2 | 64 | 1.75 | 4240-901-8117 |
| C20R1 | 5000 | 48 | 48 | 11-1/2 | 120 | 1.75 | 4240-901-8116 |
| M20* | 1250 | 24 | 24 | 11-1/2 | 40 | 1.00 | 4240-892-5369 |

*Fire Resistant

TABLE 2-5

Gas Filters

| CRDC Model No. | Rated Capacity (cfm) | Dimensions H (in.) | W (in.) | L (in.) | Net Weight (lb) | Pressure Drop (in. wg) | National Stock No. |
|---|---|---|---|---|---|---|---|
| C22R1 | 600 | 25-1/2 | 25-1/2 | 29-1/4 | 275 | 1.25 | 4240-901-8115 |
| C32R1 | 1200 | 25-1/2 | 25-1/2 | 51-5/8 | 530 | 1.25 | 4240-901-8114 |
| C29R1 | 2500 | 25-1/2 | 48 | 51-5/8 | 1000 | 1.25 | 4240-901-8113 |
| C23R1 | 5000 | 48 | 48 | 50-3/4 | 2100 | 1.25 | 4240-901-8112 |
| FFU-17/E | 1000 | 24 | 24 | 18 | 245 | 1.80 | 4240-176-9992 |

# CHAPTER 3

# UNDERGROUND HEAT TRANSFER

## 3-1. Underground heat conduction fundamentals.

*a.* The essential difference between aboveground and underground spaces is the nature of the environment. Aboveground, the main consideration is the exposure to ambient air with little or no references to conduction through the ground. No credit is taken for summer cooling by the ground. For winter heat losses from walls and floors in contact with the ground but less than 3 feet below grade, ground temperatures are ignored and losses computed as proportional to ambient air to air temperature differentials and perimeter factors dependent on construction materials.

*b.* For heated basement walls and floors more than 3 feet below grade, the steady state heat loss is calculated along concentric circular paths centered on the intersection of the ground and the wall and continued under the floor by similar arcs centered on the intersection of the wall and the floor. This heat loss is proportional to the ground conductivity, the design temperature difference between the inside air and the ground at a depth of 4 inches, and the reciprocal of the path length.

*c.* The ASHRAE Handbook, Fundamentals recommends a typical soil conductivity of 0.8 Btuh/ft °F and ground design temperature from local meteorological records. Many designers prefer the older and simpler rule of thumb, which assumes a heat flux of 0.2 Btuh/ft$^2$ for each "F temperature difference between basement and ground water temperature. Ground thermal properties are discussed in paragraph 3-6.

*d.* Underground the situation is reversed with the heat exchange to or from the environment normally controlled by conduction through the materials surrounding the space, in the absence of significant water percolation.

(1) This constructive heat transfer is complicated by the complexity of this environment, which may include known or unknown discontinuities, such as stratification, faults, inclusions, and fissures. However, it will be assumed that a single homogeneous isotropic solid may be substituted to the concrete, rock, clay, sand, or other materials actually involved.

(2) The properties of this ideal solid, referenced herein as "rock," will be based on available data and engineering judgment, more weight being given to actual material properties close to the cavity walls than farther away.

*e.* Another characteristic of the underground environment is the variable or transient nature of the heat transfer. The air temperature in an occupied underground space is usually maintained above the initial temperature of the surrounding rock.

(1) During the initial warm-up period, the heat will diffuse in the rock faster than it can be transferred at the boundary, and the rock surface temperature slowly builds up under constant and maximum flux conditions.

(2) When the walls have reached the desired temperature, the warm-up or conversions period is completed and a thermostatted or holding period begins where the heat flux through the rock gradually decreases at constant wall temperature.

(3) This thermostatted heating period ends and a cooling period begins if and when the internal heat load exceeds the heat absorption capacity of the rock. At that point, the space temperature will rise again unless the excess heat is removed by other means of cooling, such as ventilation or air conditioning.

*f.* Finally, and depending on the burial depth, interaction with aboveground ambient conditions may have to be included. The steady state solutions to this problem are well known and covered in most textbooks for cavities of different shapes. The designer will still have to judge how much to retain of the transient deep burial solution to obtain a realistic representation.

*g.* Solutions to the fundamental problem of transient heat conduction from a single geometrically simple cavity in a uniform, isotropic, and infinite solid are available but involve infinite series or harmonic functions, such as the Bessel function. These functions are still beyond the reach of ordinary electronic calculators and would require tedious and nontrivial table look-ups to numerically evaluate each case.

(1) To overcome this problem, two approximate methods of calculation have been evolved. These methods are based on analytical numerical solutions evaluated by means of the digital computer facilities of the National Bureau of Standards (NBS).

(2) The first method is a graphical solution which, in this manual, was curve fitted to allow analytic representation with elementary functions covering the whole design range.

(3) The other method is a shortcut method based on the results of a series of tests also conducted by the NBS. Though less specific than the first method, this alternate is useful for preliminary calculations.

## 3-2. Underground conduction standard calculation method.

*a.* The standard calculation method is the recommended method for estimating heat transfer to rock. It is based on relating the radial heat transfer characteristics of a cylindrical or spherical cavity of the same sidewall area to the more complicated three-dimensional conduction around the rectangular space actually utilized.

(1) The term "rectangular space" is used in this chapter to describe the rectangular parallelepipeds of length L, width W, and height H commonly used for manmade underground rooms. For practical reasons, it will be assumed that H and W are respectively limited to 20 feet and 50 feet, and satisfy equation 3-1.

$$L \geq W \geq H \geq 10 \text{ ft} \qquad \text{(eq 3-1)}$$

(2) If the ceiling is arched, or if other major irregularities in shape exist, or if there are doors or partitions of significant size, the corresponding adjustments are obvious and will not be discussed. Projected areas can be used because irregularities left in walls, ceilings, or floors after blasting or excavation may safely be ignored.

*b.* The total exposed area of the rectangular space is

$$A = 2(LW + LH + WH) \qquad \text{(eq 3-2)}$$

When compared to a cylinder of length L and lateral area A, or to a sphere of total area A, the the heat transfer from this rectangular space always exceeds the radial heat transfer from either of the other two shapes. The shape that best approximated the rectangular space is the one with the highest wall flux ratio Y. For elongated spaces,

$$[\,(L - 48)/(H + W)\,] > 2.6 \qquad \text{(eq 3-3)}$$

the cylinder is the better fit with a radius $r_1$

$$r_1 = A/2\pi L \qquad \text{(eq 3-4)}$$

and wall flux ration $Y_1$ (figure 3-1) or

$$Y_1 = 1 - (1/3)\log[1 + (274/L)^{1.5}(1 = H/105)^{-1.5}] \qquad \text{(eq 3-5)}$$

For shorter spaces, the sphere is preferred with radius $r_2$

$$r2 = (A/4\pi)^{.5} \qquad \text{(eq 3-6)}$$

and wall flux ration $Y_2$ (figure 3-1) or

$$Y2 = .975 - (1/n)\log[1 + (.7516)^n(L/10)^n p] \quad \text{(eq 3-7)}$$

where

$$n = [.163 - (H/231)]^{-1} \quad \text{(eq 3-8)}$$

$$p = [3.47 = .625u - (.344)\exp(-1.3u^2)]^{-1} \quad \text{(eq 3-9)}$$

$$u = 0.1\,(W + H - 20) \quad \text{(eq 3-10)}$$

*c.* During the warm-up period of duration the steady rate of heat transfer $q_o$ to the rock required to raise its face temperature from initial $T_1$ to the final temperature $T_2$ depends, as shown by equation 3-11, and space radius r and dimensionless Fourier number $F = at/r^2$ implicit in the rock resistance factor f(F).

$$q_o - Ak(T_3 - T_1)\,[rf(F) = k/U]^{-1} \quad \text{(eq 3-11)}$$

For the cylinder $r = r_1$, $F = F_1 = at/r_1^2$, and f from figure 3-2 or

$$f(F_1) = 2.07\log[1 + (2F_1)^{.52817}] \quad \text{(eq 3-12)}$$

For the sphere $r = r_2$, $F = F_2 = at/r_2^2$, and f from figure 3-3 or

$$f(F_2) = -.2326\log[(1 + \sqrt{10F_2})^{-4} + (1/4518)] \quad \text{(eq 3-13)}$$

*d.* Duringthe holding period, the decreasing rate of heat transfer q to the rock that corresponds to steady temperature $T_3$ in the space is a function of heat flux ratio Y, Fourier number F, and Biot number B = rU/K implicit in the rock conductance factor f(F,B), as shown by equation 3-14

$$q = (AU/Y)(T_3 - T_1) f(F,B) \qquad \text{(eq 3-14)}$$

For the cylinder $Y = Y_1$, $F = F_1$, $B = r_1U/K$, and f from figure 3-4 or

$$f(F_1,B) = (6.5/B)^{.9136} \log[1.27 + (.25/F_1)^{.61}]^{.59} \qquad \text{(eq 3-15)}$$

For the sphere $Y = Y_2$, $F = F_2$, $B = r_2U/k$, and f from figure 3-5 or

$$f(F_2,B) = (10/B)^{.8275} \log[2.23 + (.93/F_2)^{.71}]^{.2724} \qquad \text{(eq 3-16)}$$

*e.* The subscript of the Fourier number is that of the equivalent radius of the shape selected to model the space. Conversely the model shape is a cylinder or a sphere depending on whether $F_1$ or $F_2$ is used in the equations. However, the relevant parameters must always be used to correctly calculate any dimensionless numbers such as F or B regardless of subscript.

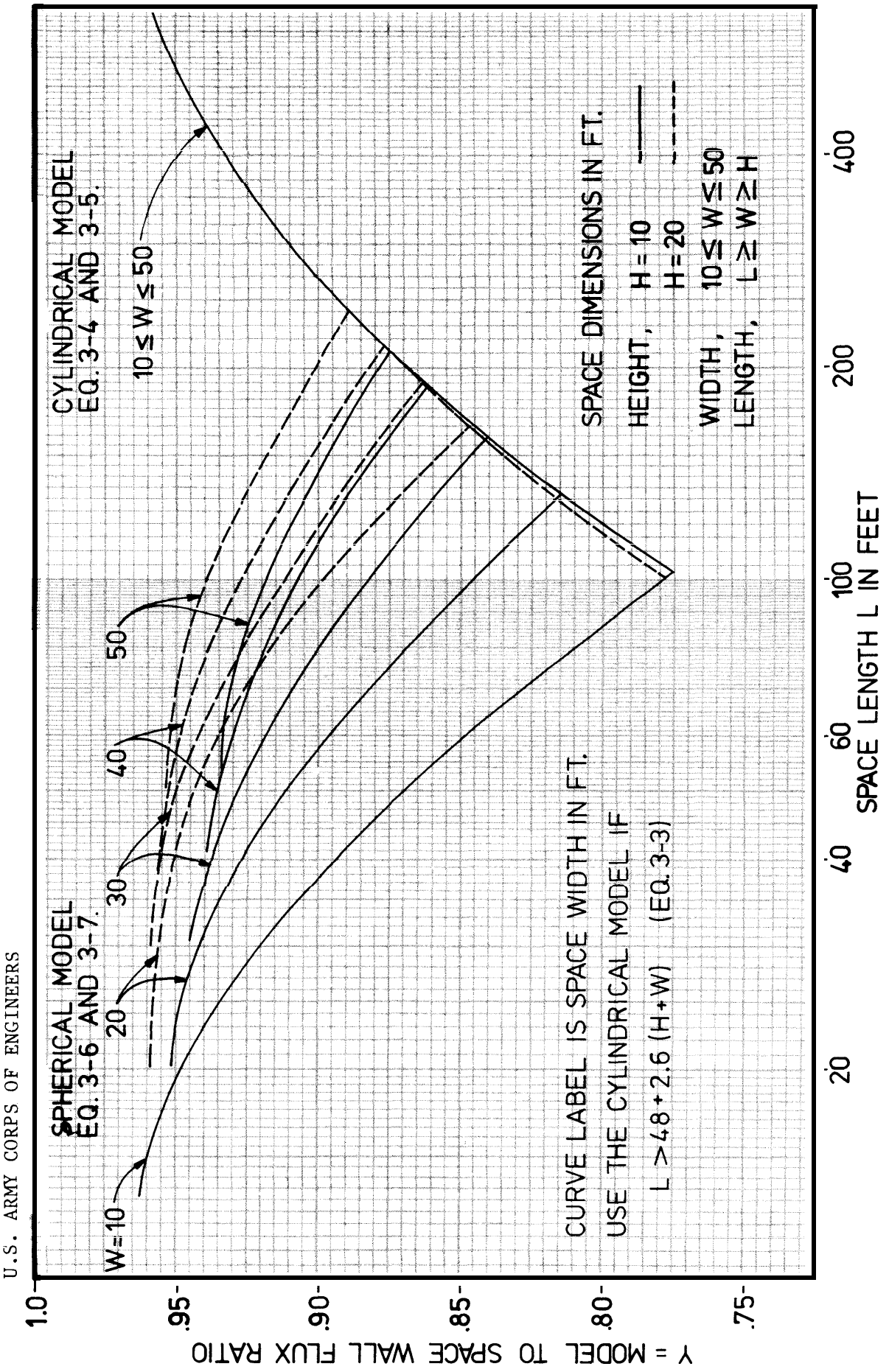


*Figure 3-1. Wall flux ratio of equivalent cylinder or sphere.*

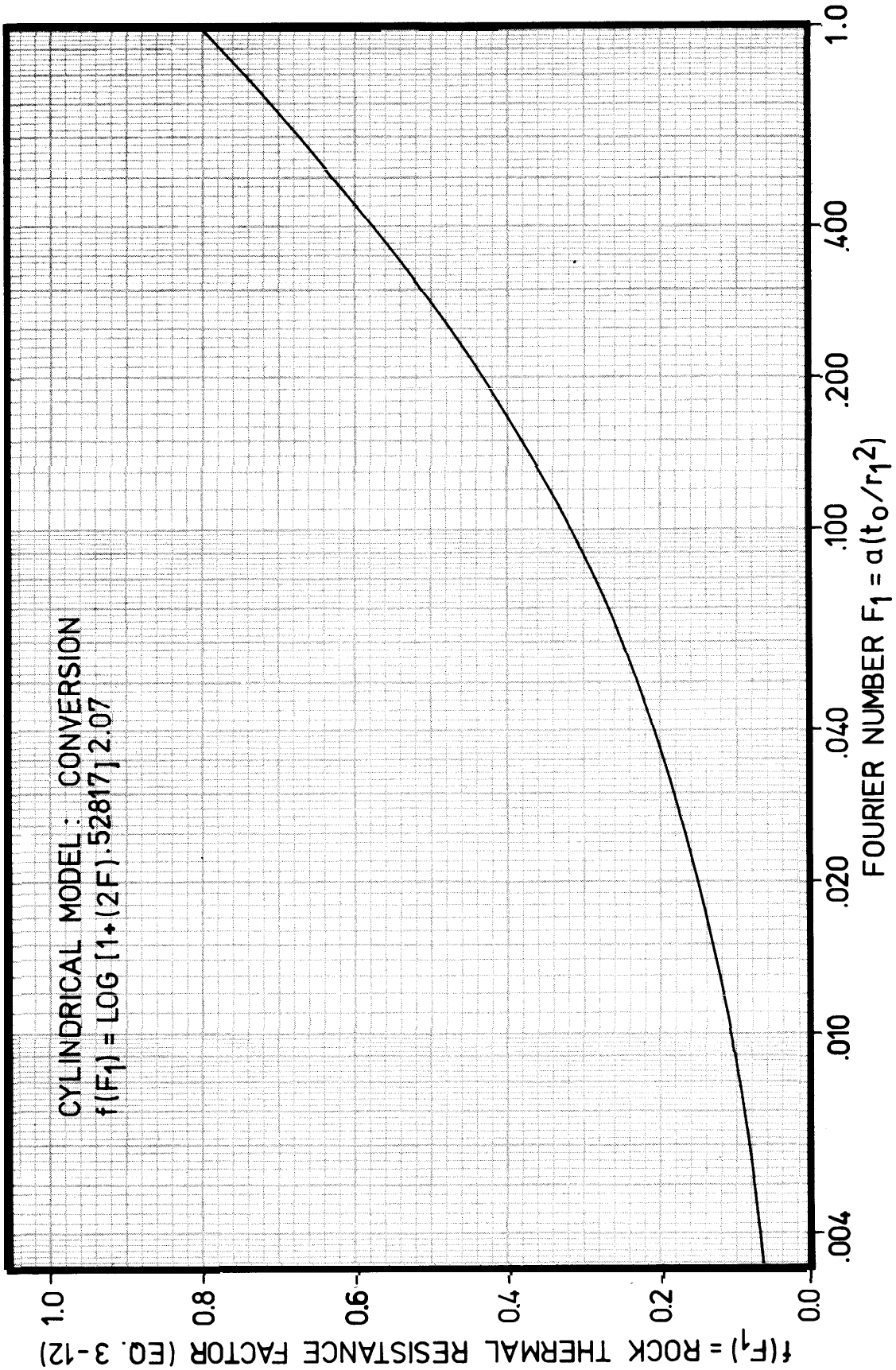


*Figure 3-2. Thermal resistance factor, cylinder model, warm-up.*

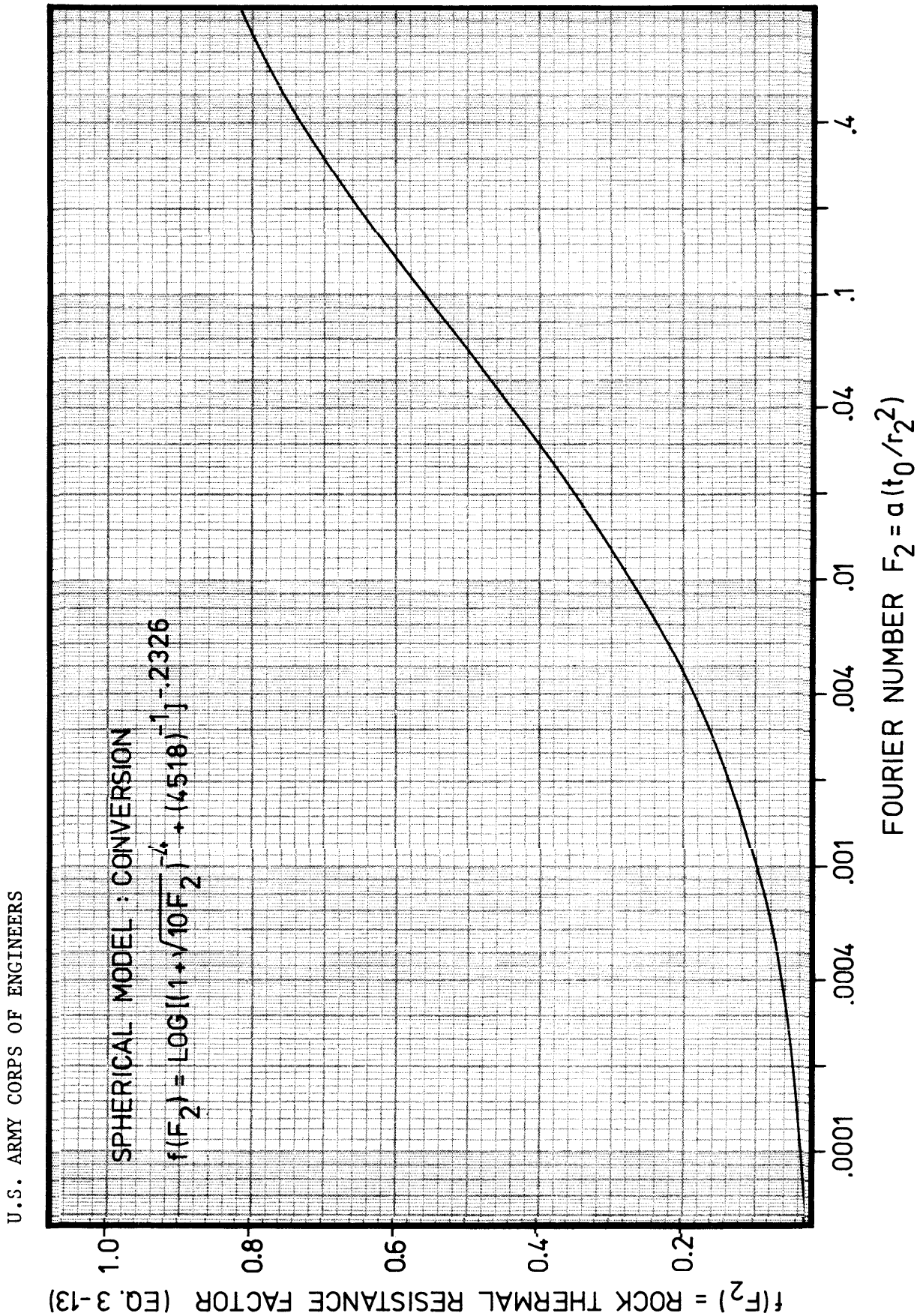


*Figure 3-3. Thermal resistance factor, sphere model, warm-up.*

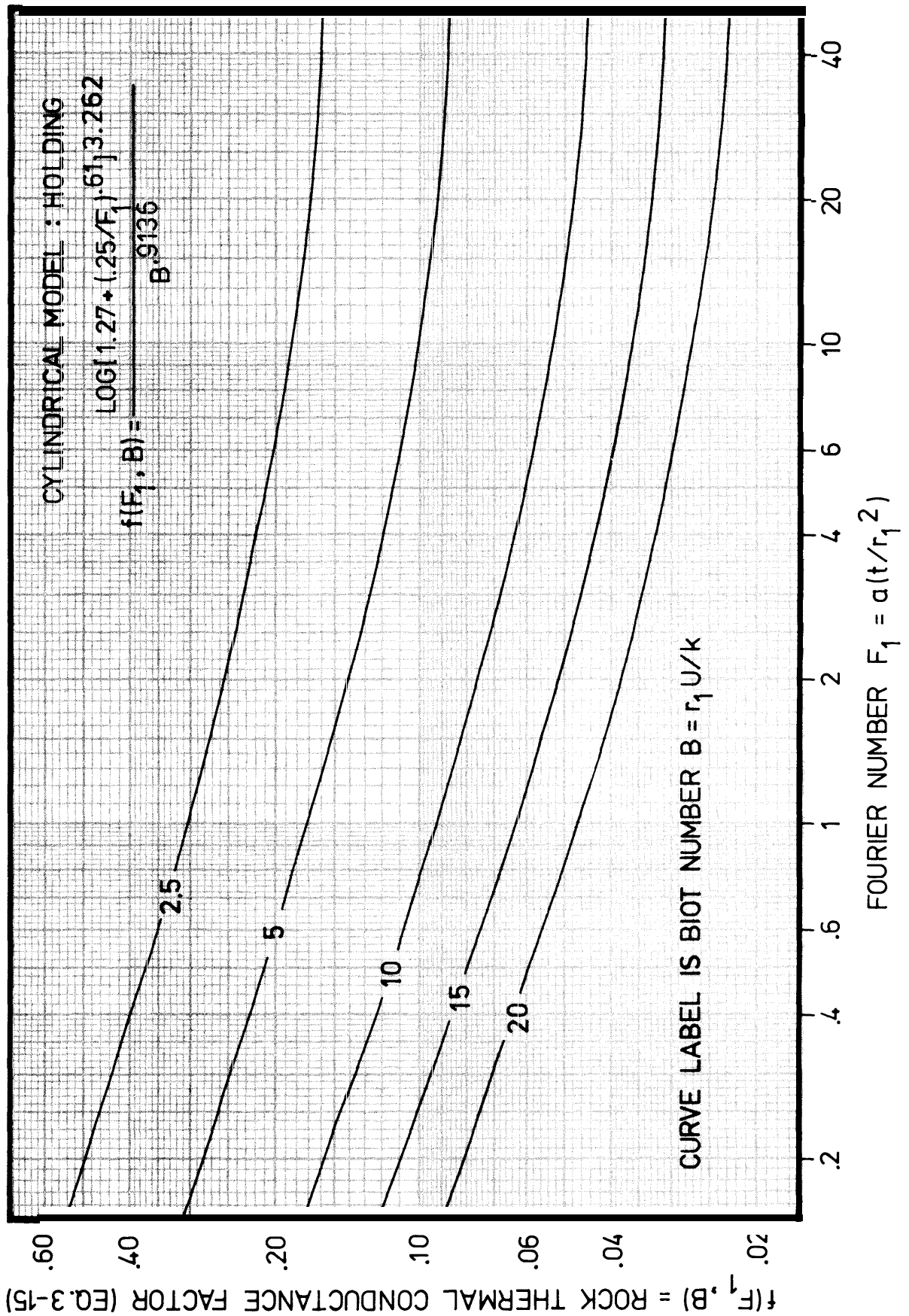


*Figure 3-4. Thermal conductance factor, cylinder model, holding.*

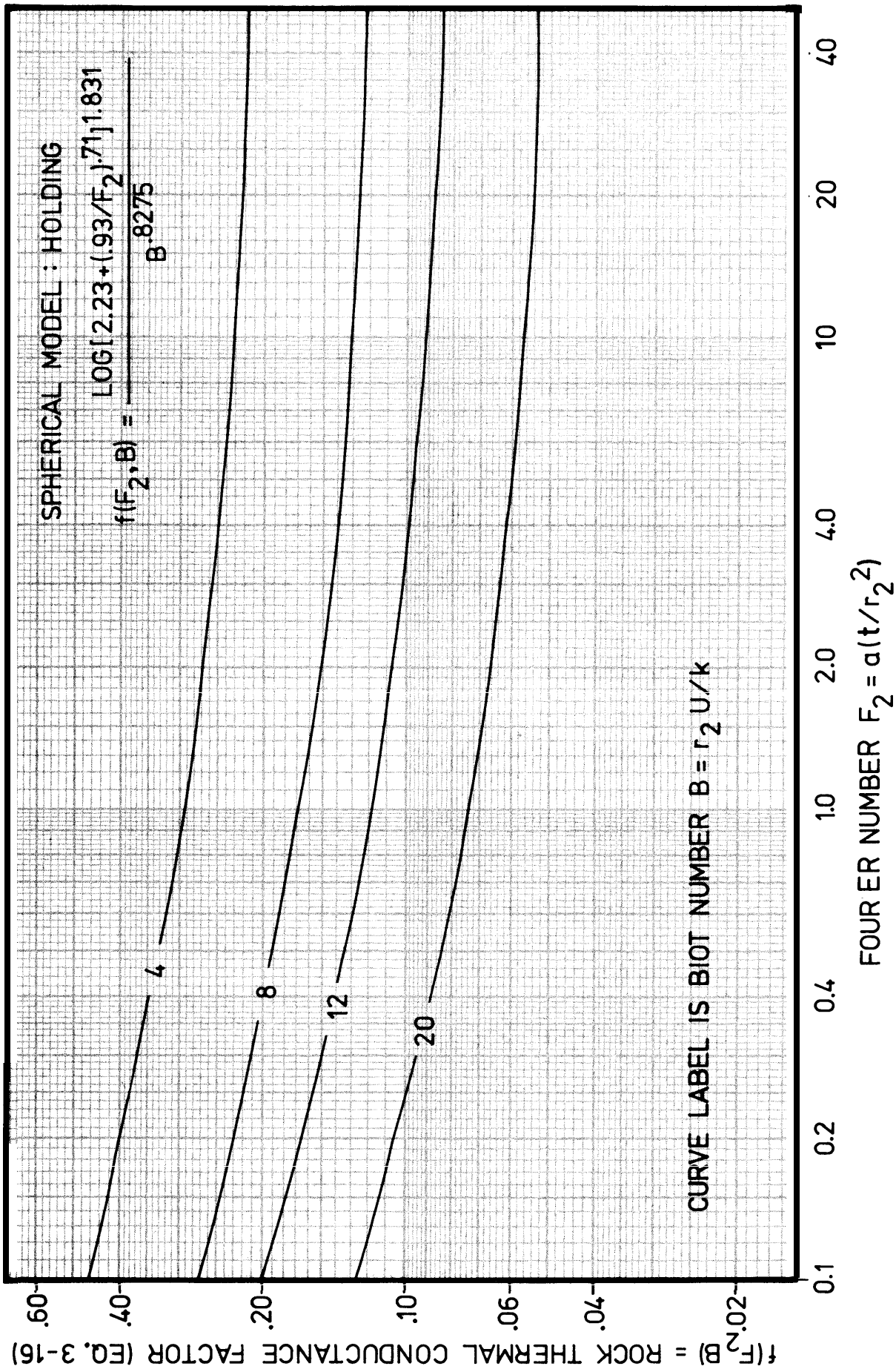


*Figure 3-5. Thermal conductance factor, sphere model, holding.*

## 3-3. Underground conduction shortcut calculation method.

*a*. This method is empirical and based on the lumped heat capacity of the rock around the space effectively involved in the heat transfer. The volume V of this rock shell is determined by the configuration of the isothermal surfaces around the underground cavity. Figure 3-6 shows the location of typical isotherms around a rectangular space.

(1) The outer isotherms tend to the cylindrical shape with hemispherical caps. In particular, heat does not penetrate the corners to the same depth as at the sides. As a result, the rock volume enclosed by these isotherms is approximately prismatic with beveled edges and pyramidal at the corners, as shown in figure 3-7.

(2) For a penetration depth D at the sides, the prismatic shell volume is the sum of three terms corresponding to the 6 faces, the 12 edges, and the 8 corners of the rectangular space, or

$$v = D[A+2(L+W+H)D+(4/3)D^2] \qquad \text{(eq 3-17)}$$

(3) The actual greenstone rock tested in the NBS experiment (report 2942) had a diffusivity of .0388 $ft^2/h$, and the temperature profiles corresponding to different warm-up duration to are shown in figure 3-8.

*b*. For any reasonable warm-up time in excess of 100 hours, the effective depth of penetration is about 10 feet which is the recommended value of D to consider in the calculation of the volume by equation 3-17.

(1) By integrating the temperature profiles for warmup time to over the penetration depth D, the average temperature increase N of the whole shell volume is expressed as a fraction of that at the face (figure 3-9) or

$$N = (5/D)(t_o/800)^{.45} \qquad \text{(eq 3-18)}$$

With correction for rock diffusivity different from that of greenstone, the total warm-up heat transfer is then

$$Q_o = N(kV/.0388)(T_2 - T_1) \qquad \text{(eq 3-19)}$$

(2) Similar tests under holding conditions show that the heat flow rate after t hours is approximately

$$q = 0.565(kV/D)(at)^{-.5}(T_2 - T_1) \qquad \text{(eq 3-20)}$$

By integration over time the total holding heat transfer is

$$Q \quad 1.13(kV/D)(t/a)^{0.5}(T_2 - T_1) \qquad \text{(eq 3-21)}$$

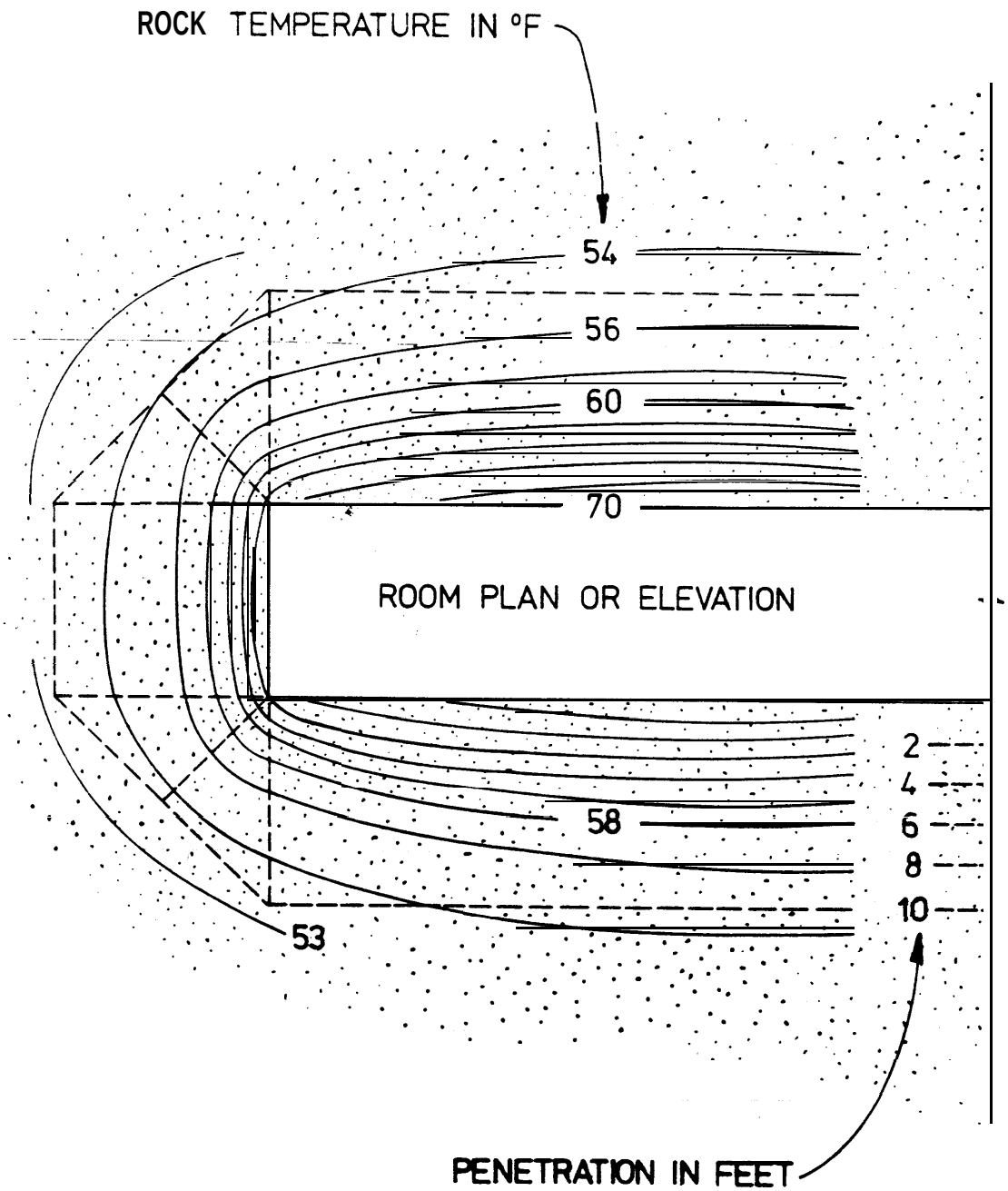


U.S. ARMY CORPS OF ENGINEERS

*Figure 3-6. Underground cavity, typical isotherms.*

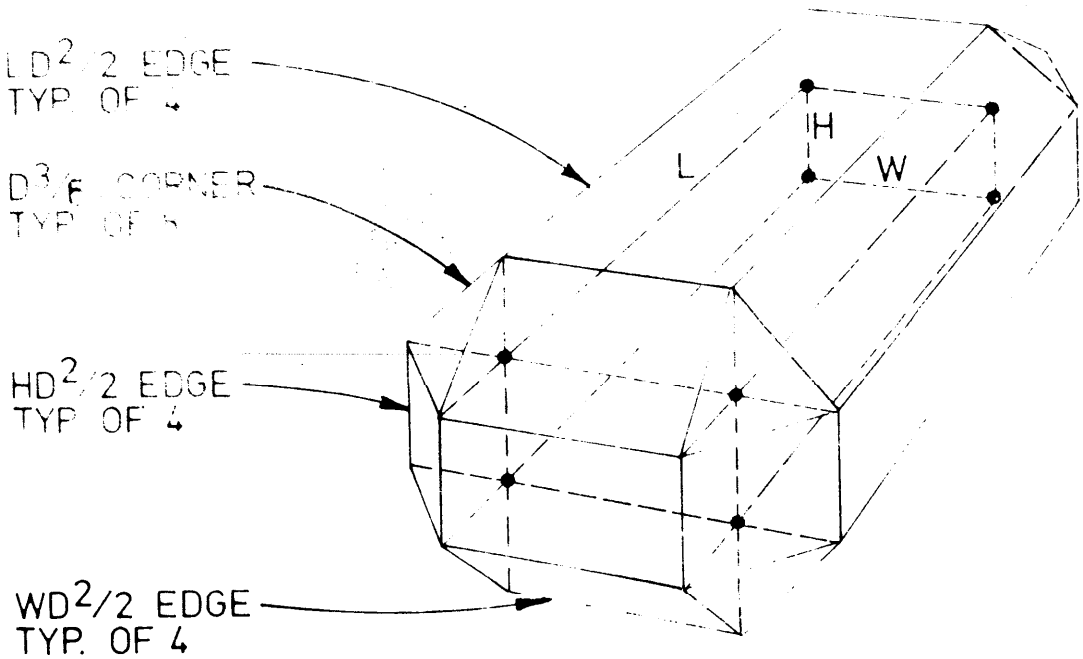


$$V = D[A + 2D(L + W + H) + 4D^2/3] \quad \text{(EQ. 3-17)}$$

U.S. ARMY CORPS OF ENGINEERS

*Figure 3-7. Rock shell volume* isometric.

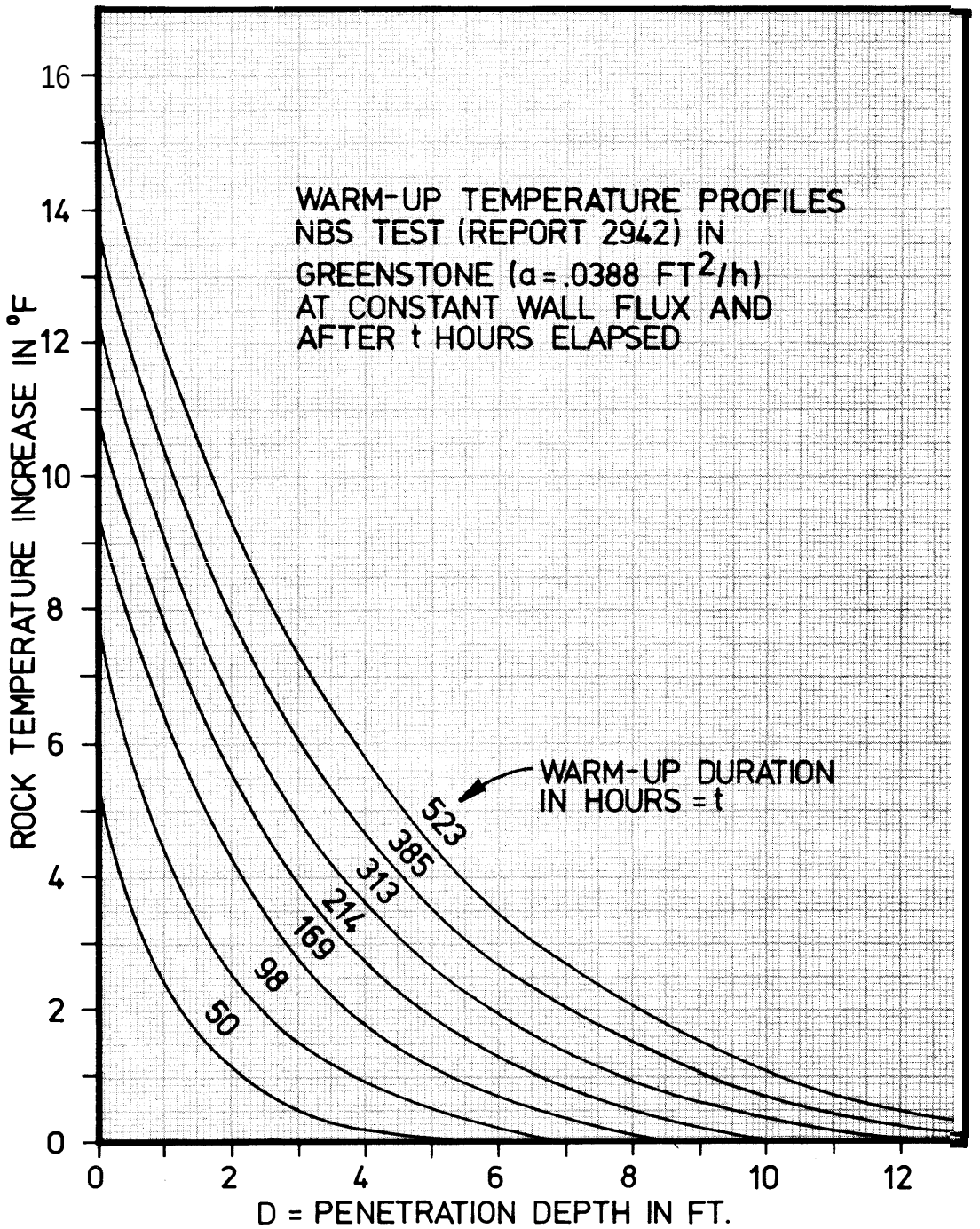


*Figure 3-8. Typical warm-up temperature profiles.*

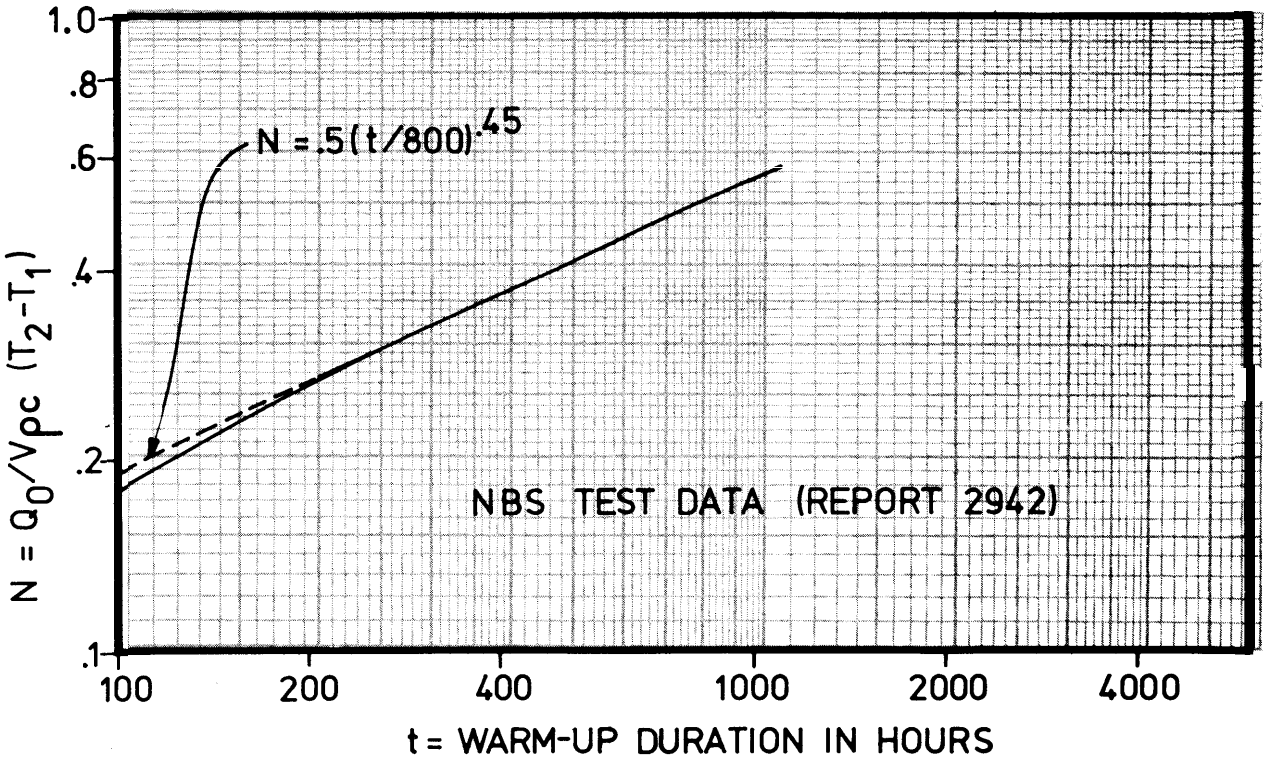


U.S. ARMY CORPS OF ENGINEERS

*Figure 3-9. Volume averaged rock shell temperature ratio.*

## 3-4. Tunnel intake air tempering.

*a.* Fresh or outside air needed for ventilation is often introduced to installations through shafts or nnels with bare walls. For a tunnel in continuous use, heat is transferred from the air to the rock in summer and from the rock to the air in winter. Savings are possible under both conditions, because the delivered air is warmed in winter and cooled and possibly somewhat dehumidified in summer, thus reducing the heating and cooling loads, respectively.

*b.* The temperature of the air at the exit $T_L$, like that at the entrance To, oscillates above and below the mean annual temperature $T_1$, but the temperature change $(T_L - T_1)$ is smaller at the exit. This problem is subject to analytical treatment if it is assumed that the average outside air temperature departures (To - $T_1$) depends on the product of time with the constant angular velocity $\omega$ of the annual cycle (2 radians per 8760 hours period) according to the basic harmonic equation 3-22:

$$(T_0 - T_1) = (T_2 - T_1)\cos(w\,t) \qquad \text{(eq 3-22)}$$

where the time t expressed in hours, is started at zero on 15 July, thus giving a maximum temperature $T_2$ on 15 July and a minimum temperature on 15 January.

*c.* The amplitude $(T_2 - T_1)$ is the maximum temperature departure of outside air from the mean annual air temperature. Because the variation of outdoor temperature is based on a single harmonic and not on diurnal changes, the amplitude $(T_2 - T_1)$ is assumed to be half of the annual range defined as the difference between the mean temperature of the warmest and the coldest month.

*d.* Assuming also that the rock temperature in the vicinity of the tunnel is the mean annual temperature $T_1$, it maybe shown that the temperature departure $(T_L - T_1)$ at distance L downstream from the tunnel inlet is also periodic.

$$T_L - T_1 = (T_2 - T_1)[\exp(-GG_1)]\,[\cos(\omega\,t - GG_2)] \qquad \text{(eq 3-23)}$$

where

$$G = kL/w'c' \qquad \text{(eq 3-24)}$$

$$G_1 = 1.5(1 + 4.67Z - Z^2) - 2Z\log[1 + (6/B)^2] \qquad \text{(eq 3-25)}$$

$$G_2 = .25 + G_3 Z - G_4 Z^2 \qquad \text{(eq 3-26)}$$

$$G_3 = \log(863B^{1.1}) - 3.8\exp(-.847B) \qquad \text{(eq 3-27)}$$

$$G_4 = .48 + .56/\exp[(B-3)/4]^2 \qquad \text{(eq 3-28)}$$

$$r_3 = 2S/P \qquad \text{(eq 3-29)}$$

$$0.1 \le Z = r_3 (w/a)^{.5} < 1.1 \qquad \text{(eq 3-30)}$$

$$2.0 \le B = r_3 (h'/k) \le 20 \qquad \text{(eq 3-21)}$$

*e.* The equivalent radius $r_3$, being twice the ratio of the tunnel cross-section S to its perimeter P, is by definition the tunnel hydraulic radius. The Biot number B is based on the tunnel wall surfs conductance h', and $Z^{-2}$ can be considered as the modified Fourier number for periodic heat trans, based on a time constant equal to the reciprocal of the angular velocity. Functions $G_1$ and $G_2$ of Z and B are shown in figure 3-10.

*f.* The amplitude or maximum air temperature departure at point L is the product of the two first factors in equation 3-23 and occurs when the time is equal to the phase lag $GG_2$ divided by the angular velocity.

*g.* If a tunnel or shaft is used only intermittently as an airway, the equations in this section do not apply. However, it is believed that these equations will give conservative values for heat exchange in that full utilization of the heat capacity of the surrounding rock is not realized for the intermittent operation.

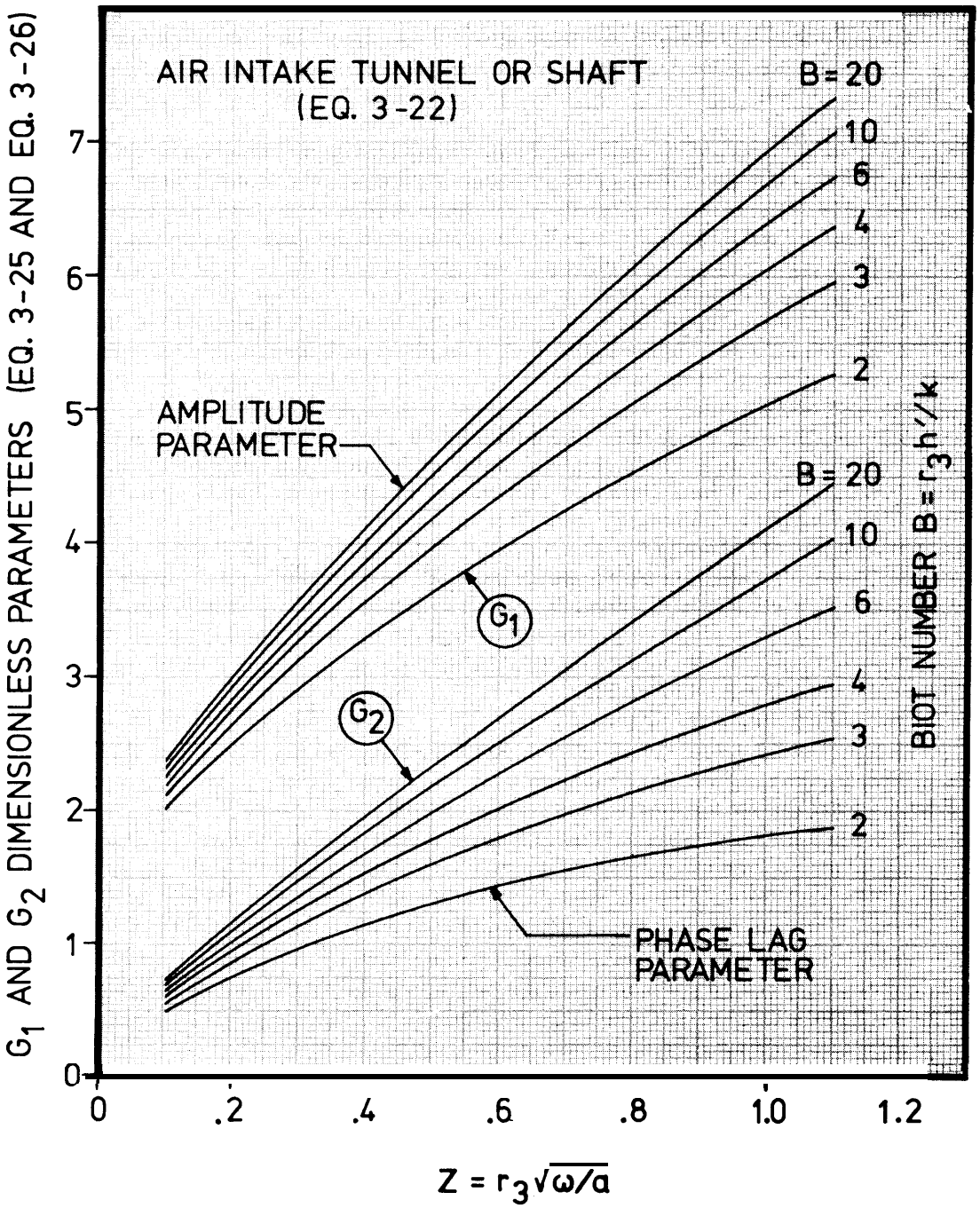


*Figure 3-10. Tunnel air temperature, amplitude and lag factors.*

## 3-5. Thermal properties of rock.

*a. General.*

(1) **Heat** transfer calculations for underground structures require values of the thermal properties of the rock or homogeneous solid assumed to represent the actual materials surrounding the structure. These parameters include conductivity, specific heat, density, diffusivity, temperature, and moisture content.

(2) In the calculations it was assumed that convective heat transfer associated with the percolation of water through the rock could be neglected when compared to the conduction due to the temperature gradients. However, moisture will generally increase conductivity, specific heat, and density and to a lesser extent thermal diffusivity. As a result, the influence of the moisture cannot be neglected, especially close to the ground surface, where depending on the permeability of the rock, dry and wet spells could occur as a reflection of aboveground precipitation or drainage.

(3) Unfortunately, the available data covering thermal properties are incomplete and in some degree discordant. This is one more reason that it is practically impossible to validate design for a given site without a geological examination, including sampling and testing of the thermal parameters and location of the water table.

(4) For estimating purposes, the designer is forced to exercise great care in selecting the appropriate range of thermal properties. To achieve this goal, data from different sources are shown in table 3-1 and discussed in the following. For more references on thermal properties, the designer is , refered to "Soil Thermal Properties; and Annotated Bibliography (Office of Civil Defense Research Report OCD-OS-62-58) AD 432-604."

*b.* Specific heat. For estimates, a specific heat of 0.2 Btu/lb°F is recommended for any rock and for use in the equations in this chapter, although rock specific heats as low as 0.16 Btu/lb°F have been reported. The specific heat value of most soils decreases with a decrease in temperature. The average at 0 °F is approximately 0.16 Btu/lb °F. Values at temperatures between zero and 140 °F can be estimated by linear interpolation between the two values given.

c. *Thermal conductivity and density.*

(1) Thermal conductivity of about 1.5 Btuh/ft °F and a density of 186 lb/ft$^3$ have been used for greenstone rock in demonstration problems and are regarded as good assumptions for preliminary estimates in many cases.

(2) A correlation for igneous rocks to known quartz, feldspar and mafic composition is shown in figure 3-11. To find the thermal conductivity, draw a line from the representative point, concurrent with two nearest thermal conductivity lines, and read the thermal conductivity at the intercept with the conductivity scale. To find the density, proceed similarity with the density lines and scale.

(3) Density of igneous and metamorphic rocks generally falls in the range from 150 to 190 lb/ft$^3$ and that of sedementary rocks in the range from 100 to 175 lb/ft$^3$. Thermal conductivity of igneous and metamorphic rocks falls in a range from 1.2 to 2.0 Btuh/ft °F. Granites are in the range of 20 to 40 percent quartz, 50 to 73 percent feldspar, and 5 to 12 percent mafic.

(4) The four figures 3-12 through 3-15 are presented to aid in the estimate of the thermal conductivity of silty clay and sandy soils in the frozen and unfrozen condition. It is expected that these charts will give conductivity values with a precision of 25 percent. The effect of density, moisture content, freezing, and texture is clearly illustrated on these graphs. Typical thermal properties of other materials are shown in table 3-1.

*d. Temperature.*

*(1)* At depths of 50 to 70 feet, the undisturbed temperature of earth or rock can be expected to be within a few degrees of the mean annual air temperature for the region, in the absence of disturbing factors such as underground fires or large subterranean streams. At greater depths, the temperature is found to be higher, increasing at the rate of about one 'F per 100 feet. Earth temperature thus determined are adequate for AC estimates for underground spaces, although a check of the figures is desirable during the survey of a proposed site.

(2) The analytical treatment of the steady periodic response of $T_D$ the ground temperature D feet below the surface to the fundamental harmonic variation of the annual surface temperature indicated that the attenuation or ratio of the amplitude diminishes exponentially as

$$(T_{Dmax} - T_1)/(T_2 - T_1) = \exp[-D(\omega/2a)^{.5}] \qquad \text{(eq 3-32)}$$

and that there is a progressive lag expressed in radians by

$$\phi = D(w/2a)^{.5} \qquad \text{(eq 3-33)}$$

in the phase of the temperature wave.

(3) Measuring either the attenuation or the lag is sufficient to determine the diffusivity of the rock. Such measurements were made by NBS. The data indicate an annual variation of about 8 °F, and a mean temperature of about 53 °F at a depth of 13 feet. The harmonic analysis of the air temperature indicates a fundamental annual variation of 41 "F, with the approximate maximum on July 5 and minimum on January 4. The minimum of the temperature 13 feet below ground occurs early in April or approximately 2,100 hours later. The diffusivity calculated from the attenuation (equation 3-32) is

$$a = (\pi/8760)\,[13/\ln(41/8)]^2 = 0.0227\ \text{ft}^2/\text{h}$$

The diffusivity calculated from the lag (equation 3-33) is

$$a = (8760/4\pi)\,(13/2100)^2 = 0.0267\ \text{ft}^2/\text{h}$$

The results are within 20 percent and indicate that the diffusivity is seldom known with greater accuracy. This fact should be remembered when the designer calculates the heat transfer to the rock.

(4) At a depth D1 of one wave length $\phi = 2\pi$ and from equation 3-32

$$D_1 = 2\pi\,(2a/\omega)^{.5} \qquad (3\text{-}34)$$

According to equation 3-32, the attenuation is exp $(-2\pi)$ = .0019. This very strong attenuation explains the virtual extinction of all but the slowest variation below a certain depth. As a result, daily surface temperature variation is insignificant below a depth of approximately one foot but the annual fundamental is measurable to depths exceeding 20 feet.

(5) The NBS has accumulated underground temperature data for selected stations in the contiguous United States (NBS Report 9493, January 1968) and beneath five different surfaces (NBS Report 10373, February 1971).

(6) The integrated monthly average earth temperature from the surface to a depth of 10 feet is insensitive to the thermal diffusivity as long as it is larger than 0.02 ft $^2$/h, a condition that is normally satisfied. The ASHRAE Handbook, Application tabulates the annual maximum and minimum of the rock temperature average of the top 10 feet below the surface for 47 stations throughout the United States.

(7) When the proximity of a nonthermal water table must be taken into account, the designer may estimate the water temperature of wells 30 to 60 feet below the surface at about 3 F above the mean annual air temperature aboveground. For wells deeper than 50 feet, add 1 ° F for each additional 64 feet of depth.

TABLE 3-1

Typical Thermal Properties of Various Materials

| Property | k (Btuh/ft °F) | a ($ft^2/h$) | ρ ($lb/ft^3$) | c (Btu/lb °F) |
|---|---|---|---|---|
| Dense Rock | 2.00 | .050 | 200 | .200 |
| Average Rock | 1.40 | .040 | 175 | .200 |
| Dense Concrete | 1.00 | .033 | 150 | .200 |
| Solid Masonry | .75 | .025 | 143 | .210 |
| Heavy Soil, Damp | .75 | .025 | 131 | .230 |
| Heavy Soil, Dry | .50 | .020 | 125 | .200 |
| Light Soil, Damp | .50 | .020 | 100 | .250 |
| Light Soil, Dry | .20 | .011 | 90 | .200 |
| Granite, minimum | 1.00 | .030 | 165 | .195 |
| Granite, maximum | 2.32 | .072 | -- | -- |
| Limestone, minimum | .30 | .009 | 155 | .224 |
| Limestone, maximum | .75 | .022 | -- | -- |
| Marble, minimum | 1.20 | .034 | 170 | .210 |
| Marble, maximum | 1.70 | .048 | -- | -- |
| Sandstone | 1.10 | .035 | 143 | .220 |
| Greenstone | 1.45 | .039 | 187 | .200 |

ESTIMATED IGNEOUS ROCK PROPERTIES

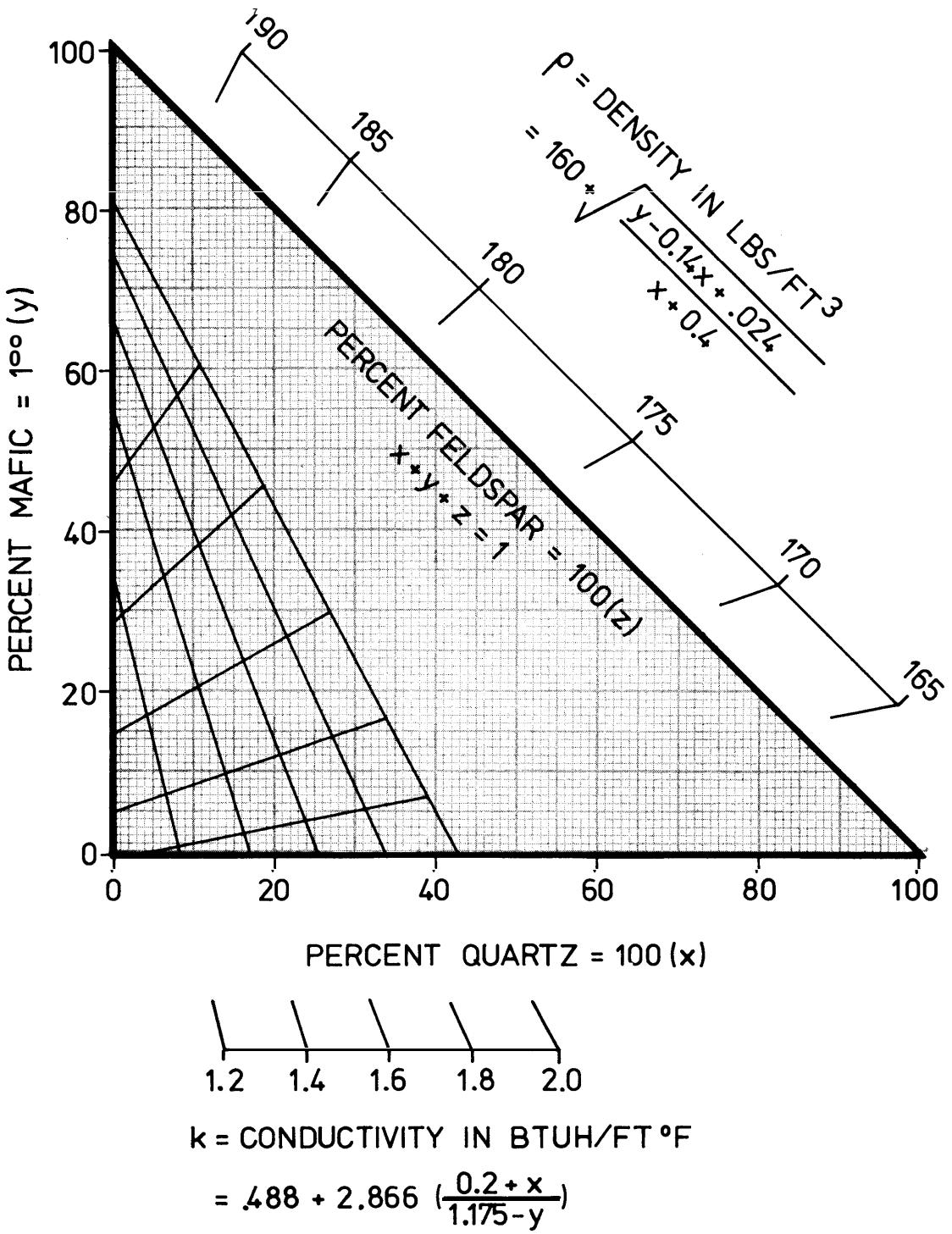


k = CONDUCTIVITY IN BTUH/FT °F

$$= .488 + 2.866 \left(\frac{0.2 + x}{1.175 - y}\right)$$

*Figure 3-11. Density and thermal conductivity of igneous rocks.*

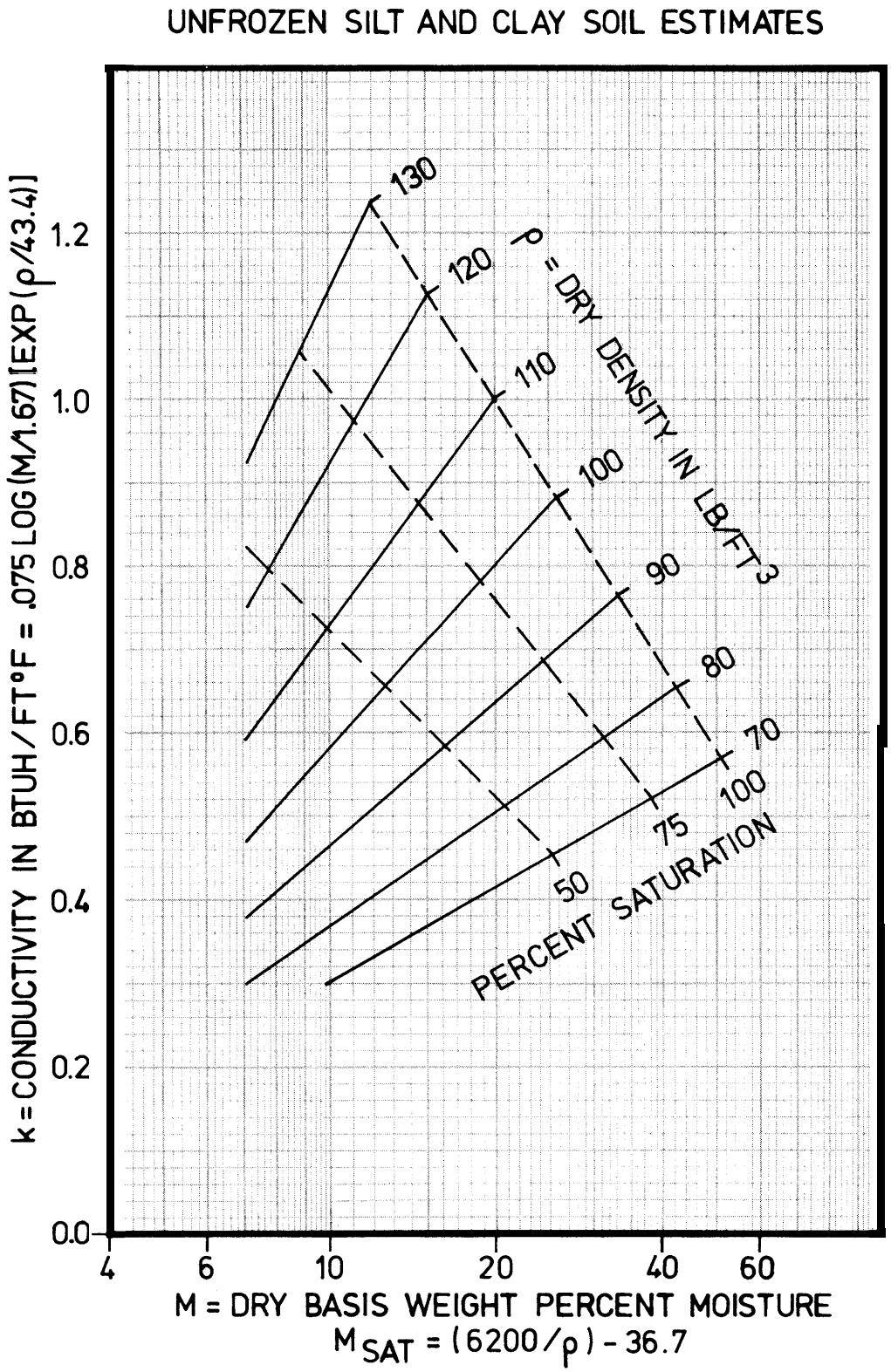


*Figure 3-12. Unfrozen silt and clay soils conductivity.*

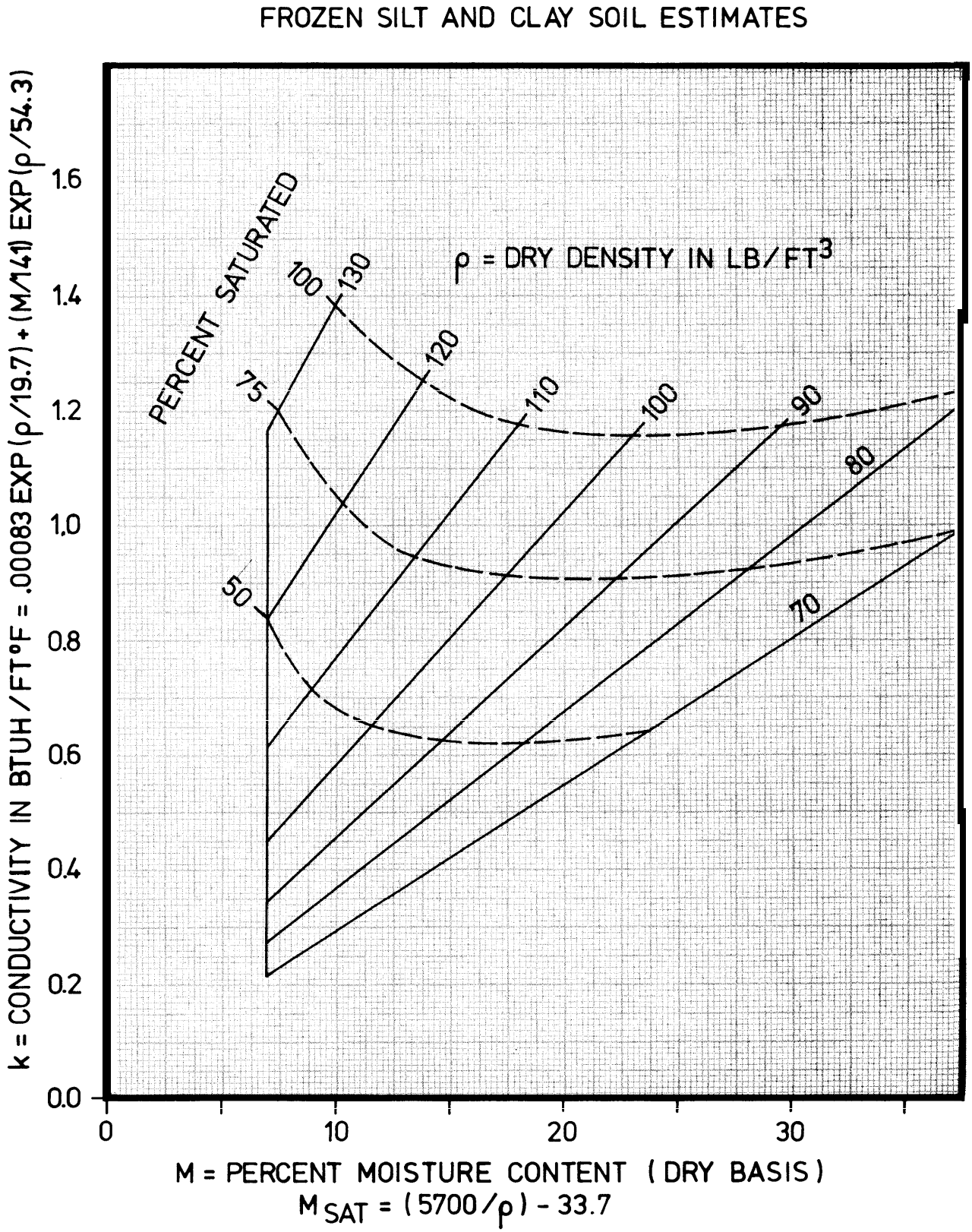


*Figure 3-13. Frozen silt and clay soils conductivity.*

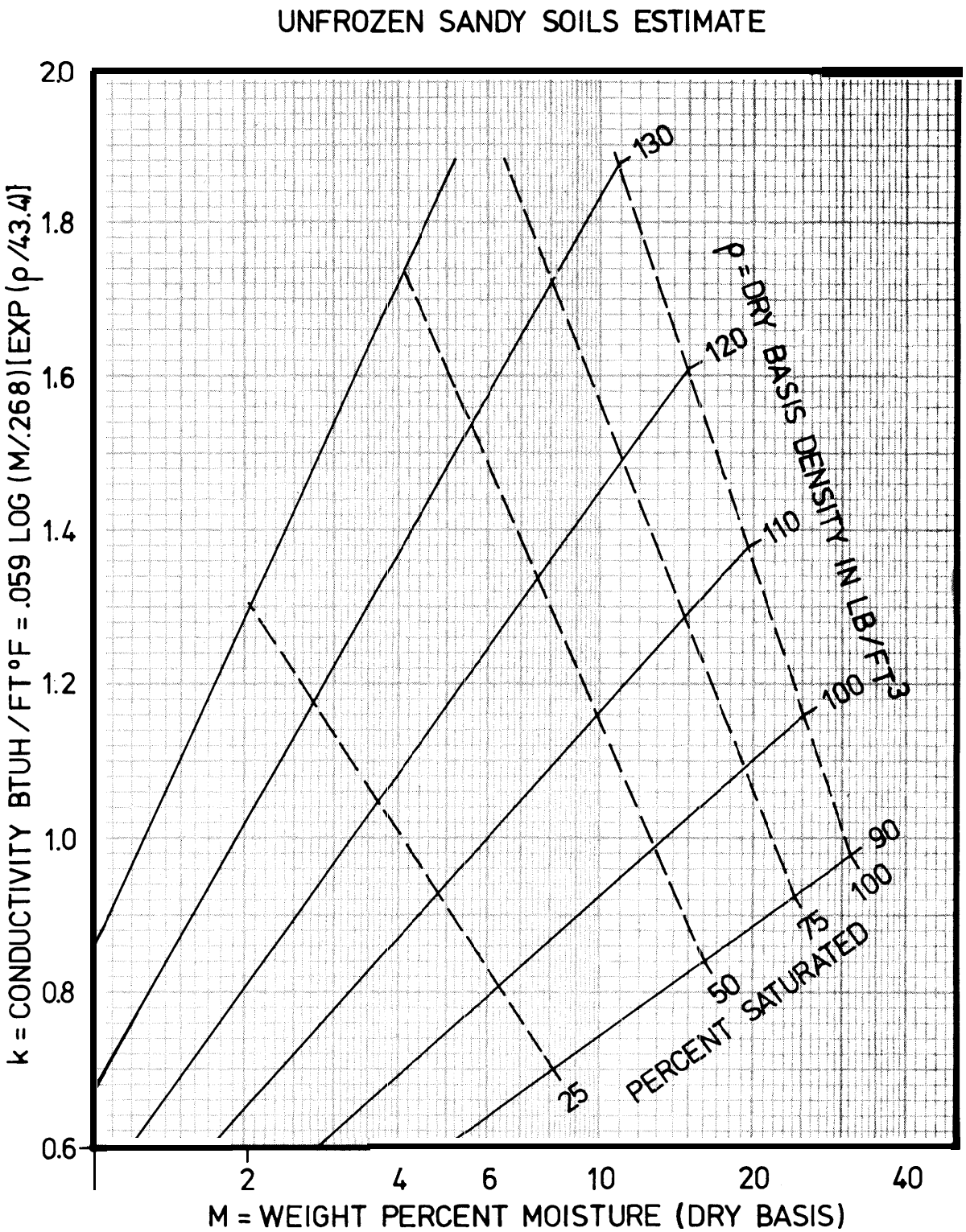


*Figure 3-14. Unfrozen sandy soil conductivity.*

FROZEN SANDY SOILS ESTIMATES

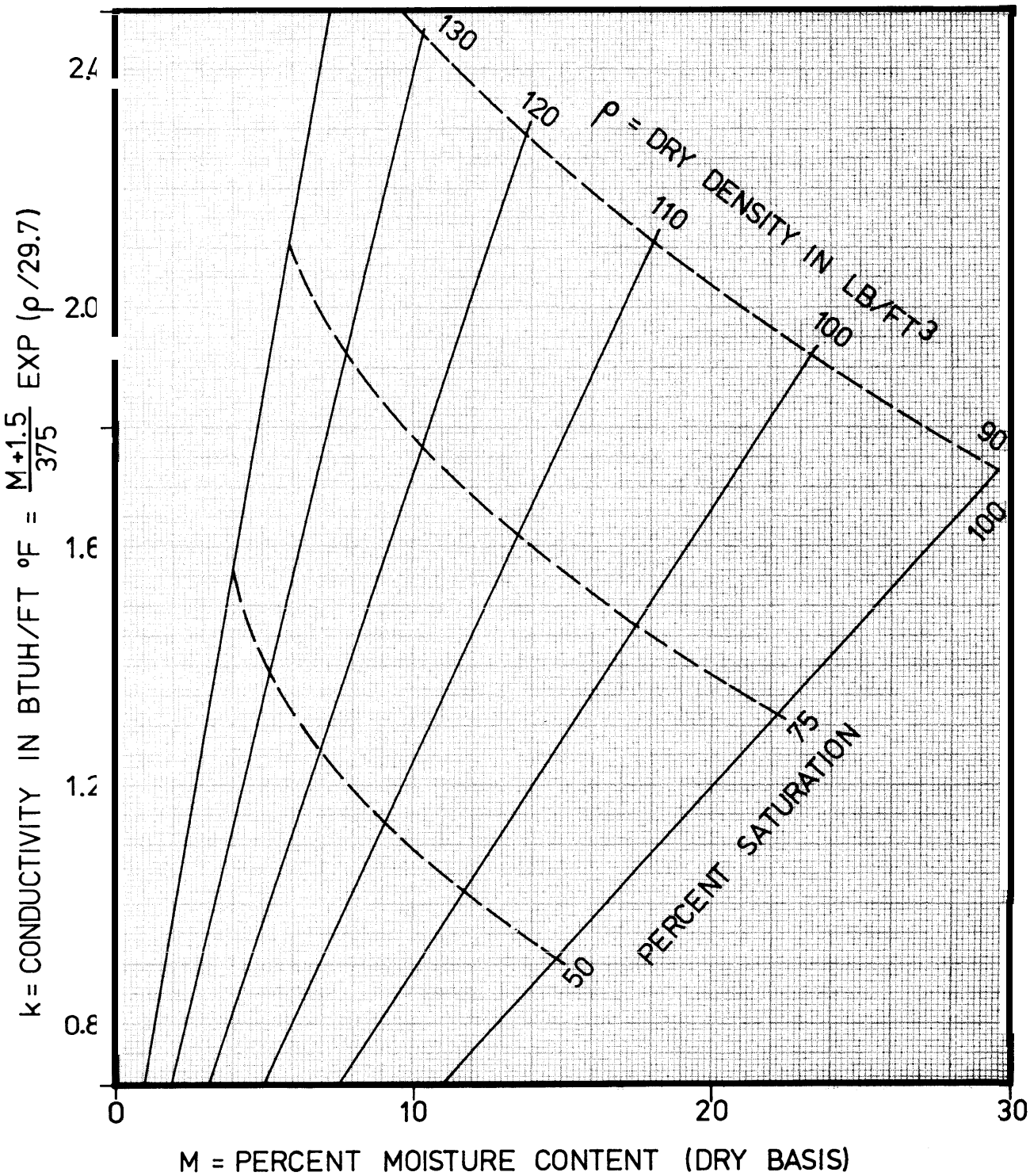


*Figure 3-15. Frozen sandy soil conductivity.*

## 3-6. Thermal properties of materials and structures.

*a.* Thermal conductance and other properties of materials listed in the ASHRAE Handbook, Fundamentals are applicable in connection with hardened structures. For estimating, the outside surface coefficients of exposed ceilings, walls, and floors of internal structures should have the same values as those ordinarily used for inside surface coefficients.

*b.* For natural convection in an empty underground chamber the air- to-rock heat transfer coefficient U, ranged from 1.4 to 1.0 Btuh/fi $^{20}$F.

*c.* Recommended values of the surface conductance h' are shown in the ASHRAE Handbook, Fundamentals. For forced convection on rough surfaces and air velocity v' in fph, a good approximation in Btuh/ft $^{20}$F is

$$h' = (v'/8{,}600)^{.8} \qquad \text{(eq 3-35)}$$

## 3-7. Conversion time duration.

*a.* The length of time required to bring the walls to the desired temperature depends on the thermal inertia of the space. Aboveground the question is seldom significant because thermostatted conditions can normally be established in less than 100 hours. For underground structures, this time is much longer and depends on the sensible and latent heat loads during conversion and during the thermostatted period, as well as the equipment available to carry these loads. Selection of the conversion duration will depend on correlating load, cost, and time factors.

*b.* Within practical limits, conversion time can be reduced by increasing equipment capacities. Available data indicates that both the removal of moisture from the surrounding rock mass and the stabilization of temperature are relatively slow processes and that a point of marginal return is reached beyond which the cost of acceleration, in terms of equipment capacities and power requirements, will be excessive. A point often overlooked is the latent load due to moisture transfer at the walls of the underground space, which will normally require some form of dehumidification to maintain acceptable conditions in the space much like in many residential basements.

*c.* In an actual case involving the conversion of an existing underground refrigerated space, closed cycle dehumidifiers were installed when it appeared that the space humidity would not come down to reasonable levels, even after rock temperatures had returned to their original levels. In the ensuing period of 630 days, 3,600,000 pounds of water were recondensed and 3,780 million (MBtu) returned to the space before a steady state was reached of 40 percent RH and the moisture emission gradually reduced to less than 3,000 gallons per week from an initial 16,000 gallons per week. This example reveals that a considerable amount of time may be required to prepare a given space for its intended function, a factor which precludes the utilization of many existing underground structures for immediate shelter.

## 3-8. Trend Analysis.

*a. General.* In order to show the influence of the different parameters such as space size and thermal properties on the heat transfer to the rock, cylindrical models were fitted to three spaces in various combinations of the parameters given in table 3-2 and the results shown graphically in figures 3-16 to 3-19.

(1) The cylindrical configuration is selected because most underground spaces are elongated and therefore best modelled by the cylinders. It could be shown that the spherical model would exhibit similar properties with respect to the parameters.

(2) Figures 3-16 and 3-17 show solutions for the constant flux during the warm-up period and are based on substituting f ($F_1$) from equation 3-12 into equation 3-11 to compute the warm-up flux.

$$q_o/A = k(T_3 - T_1)\,(2.07 r_1 \log[1 + (2at_o/r_1^2)^{.528}] + k/U)^{-1} \qquad \text{(eq 3-36)}$$

The last factor or denominator in the right side of this equation consists of two terms proportional to thermal' resistance or insulation. The first represents the insulation proper to the rock and the second that due to the surface air film and any other additional wall insulation features included.

*b. Temperature differential ($T_3$-$T_1$).* The figures are based on a differential of 25 $^0$F. The warm-up flux is directly proportional to this differential. The correction factor for the other differential is simply the ratio of the new differential to the 25 $^0$F base reference.

*c. Size.* The effect of the size of the chamber is reflected in the equivalent radius $r_1$ defined in equation 3-4 as a function of the three dimensions L, W, and H. of the space. The radius $r_1$ appears only in the first term of the denominator of the warm-up flux. This resistance term increases with $r_1$ but less than linearly due to the smaller argument of the logarithm. As a result, the warm-up flux decreases as the radius increases, a trend clearly shown in the figures.

*d. Rock conductivity k and diffusivity a.*

(1) The warm-up flux will increase with k in the numerator but less than linearly because of the simultaneous but slower increase of the thermal resistance shown in the denominator. The second term in the denominator is proportional to k, but the first increases only through the argument of the logarithm. This argument increases with the diffusivity, which in turn varies as the conductivity when the heat capacity, which is the product of the density and the specific heat, is constant.

(2) What is true of the conductivity is then also applicable to the diffusivity; an increase in the diffusivity of the rock will increase the amount of heat necessary to warm up a given space in a given time. This fact is clearly reflected in the higher fluxes of figure 3-17, which is based on the higher conductivity and diffusivity when compared to the corresponding points of figure 3-18.

*e. Heat transfer coefficient U.*

(1) This parameter is a measure of the surface conductance and is inversely proportional to the thermal resistance or insulation of the boundary. The 1.2 U value is that of bare rock while the 0.4 U value represents a certain amount of extra insulation between the rock and the space, such as would be provided by an internal structure.

(2) The warm-up flux decreases as the U value with the addition of insulation. However, the internal resistance of the rock represented by the first term in the denominator increases with the warm-up time, and for long warm-up periods the flux reduction is much less pronounced than for shorter ones. As a result, both sets of curves converge with time as shown on figures 3-16 and 3-18.

*f. Holding period.* Figures 3-18 and 3-19 show solutions for the decreasing flux during the holding period. They are based on substituting $f(F_1, B)$ from equation 3-15 and $Y_1$ from equation 3-5 into equation 3-14 to compute the thermostatted flux q as a function of time. The trend of the different parameters is qualitatively the same as those discussed above for the warm-up conditions.

TABLE 3-2

Selected Parameters for Trend Analysis

| Space Parameters | Case 1 | Case 2 | Case 3 |
|---|---|---|---|
| Length, ft | 200 | 200 | 200 |
| Height, ft | 10 | 10 | 30 |
| Width, ft | 17.4 | 35.3 | 39.4 |
| Area (equation 3-2), 1000 $ft^2$ | 11.3 | 18.8 | 30.1 |
| Equivalent radius (equation 3-4), ft | 9 | 15 | 24 |
| Temperature difference ($T_3$ - $T_1$), °F | 25 | 25 | 25 |
| Wall flux ratio (equation 3-5) | .875 | .875 | .875 |

| Rock thermal parameters | Fig. 3-16 or 3-18 | Fig. 3-17 or 3-19 |
|---|---|---|
| Conductivity, Btuh/ft °F | 1.2 | 1.7 |
| Density, lb/$ft^3$ | 179 | 165 |
| Specific heat, Btu/lb °F | .21 | .18 |
| Diffusivity, $ft^2$/h | .032 | .057 |

| Overall heat transfer coefficient | Fig. 3-16 to 3-19 |
|---|---|
| Bare room, Btuh/$ft^2$ °F | 1.2 |
| Internal structure, Btuh/$ft^2$ °F | 0.4 |

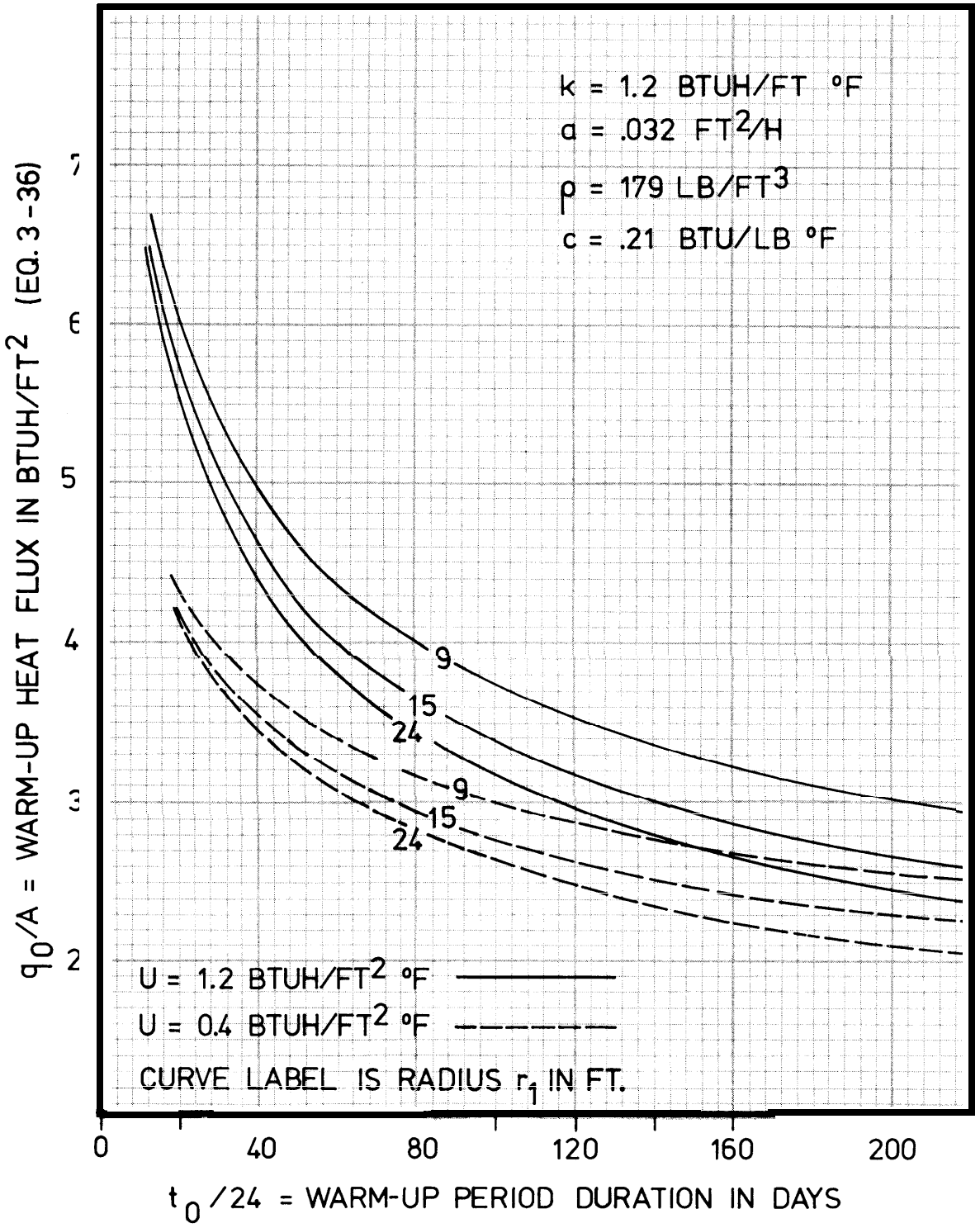


*Figure 3-16. Warm-up heat flux for k = 1.2 and 25 ° F differential.*

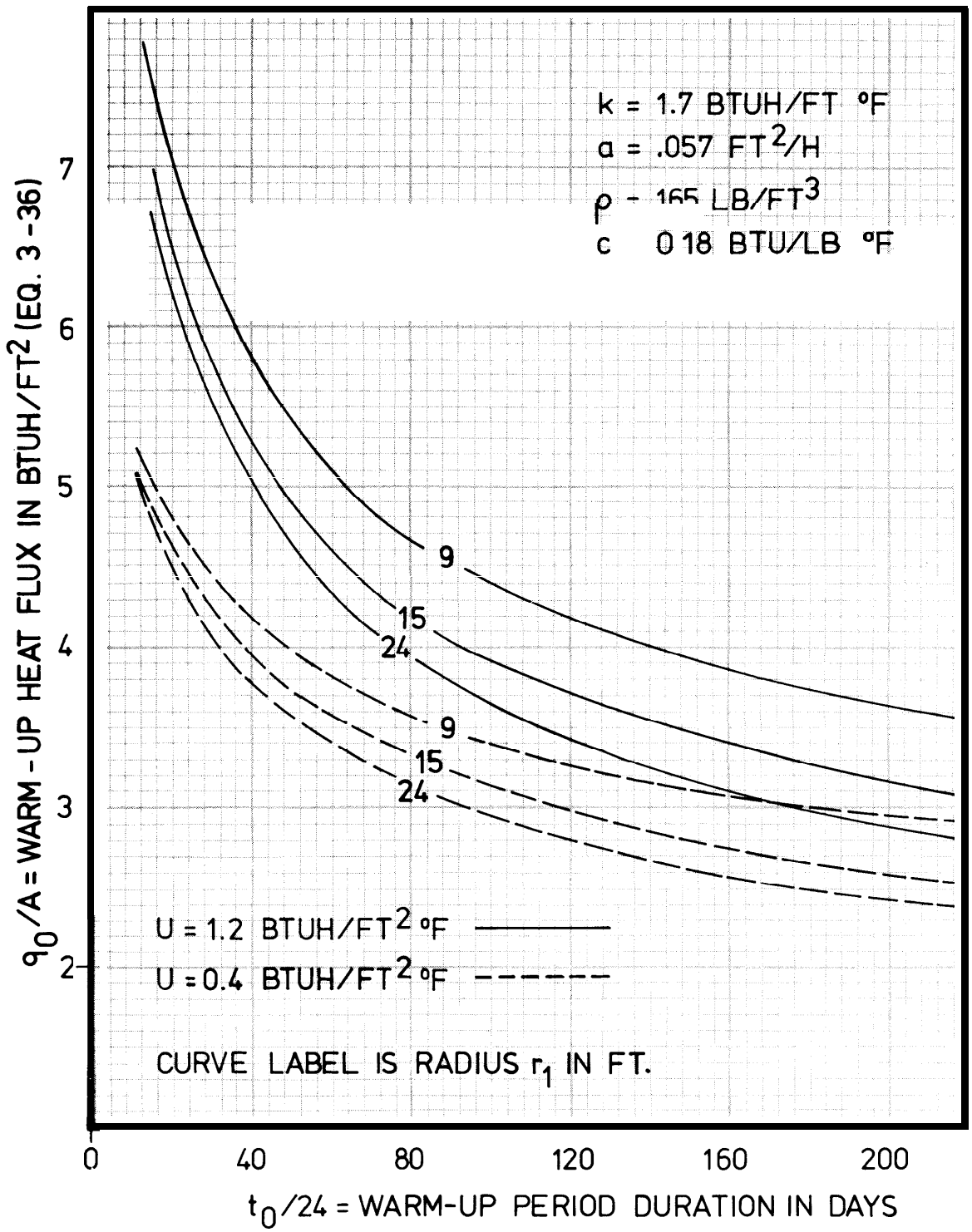


*Figure 3-17. Warm-up heat flux for k = 1.7 and 25 °F differential.*

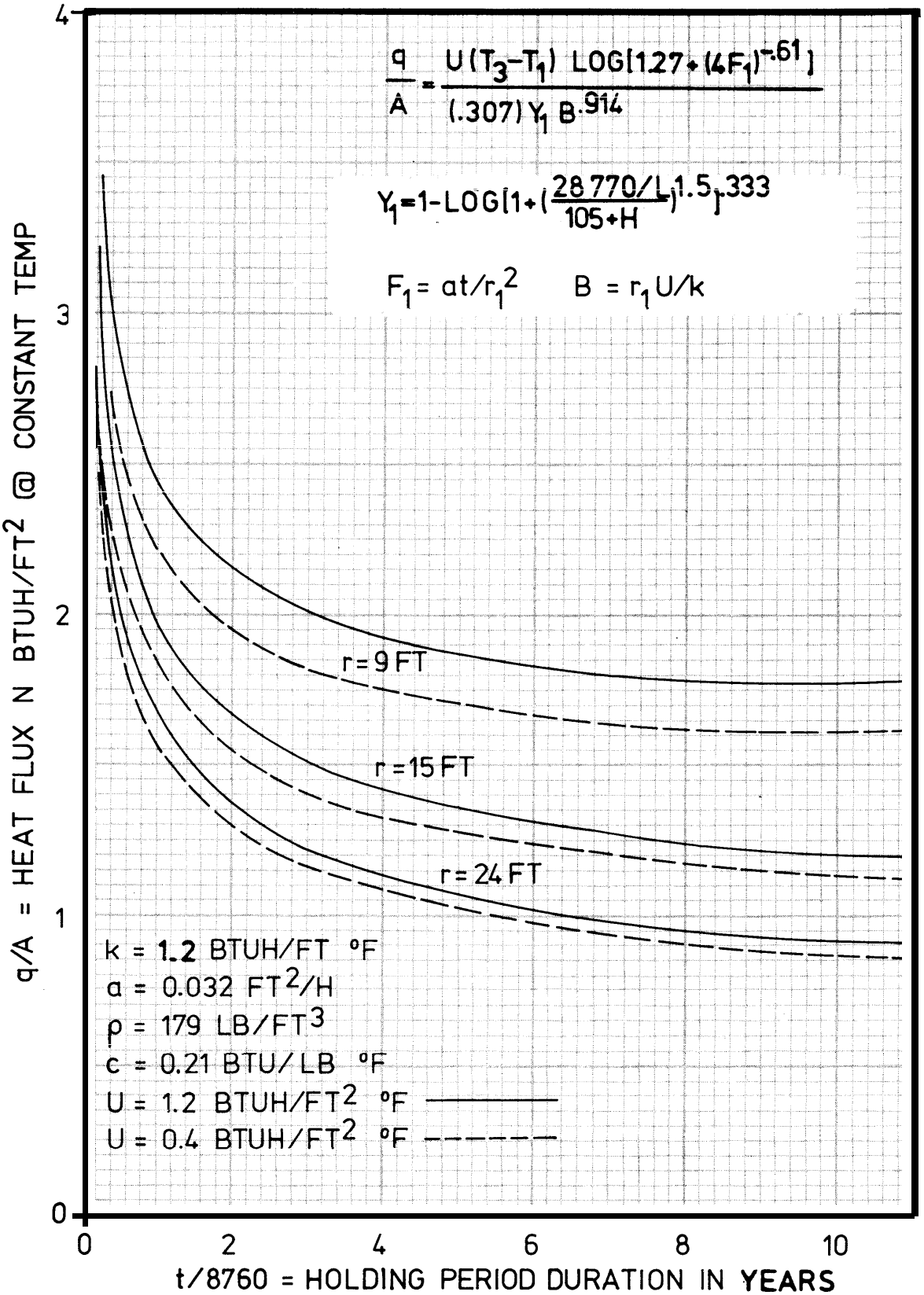


*Figure 3-18. Holding heat flux for k = 1.2 and 25 °F differential.*

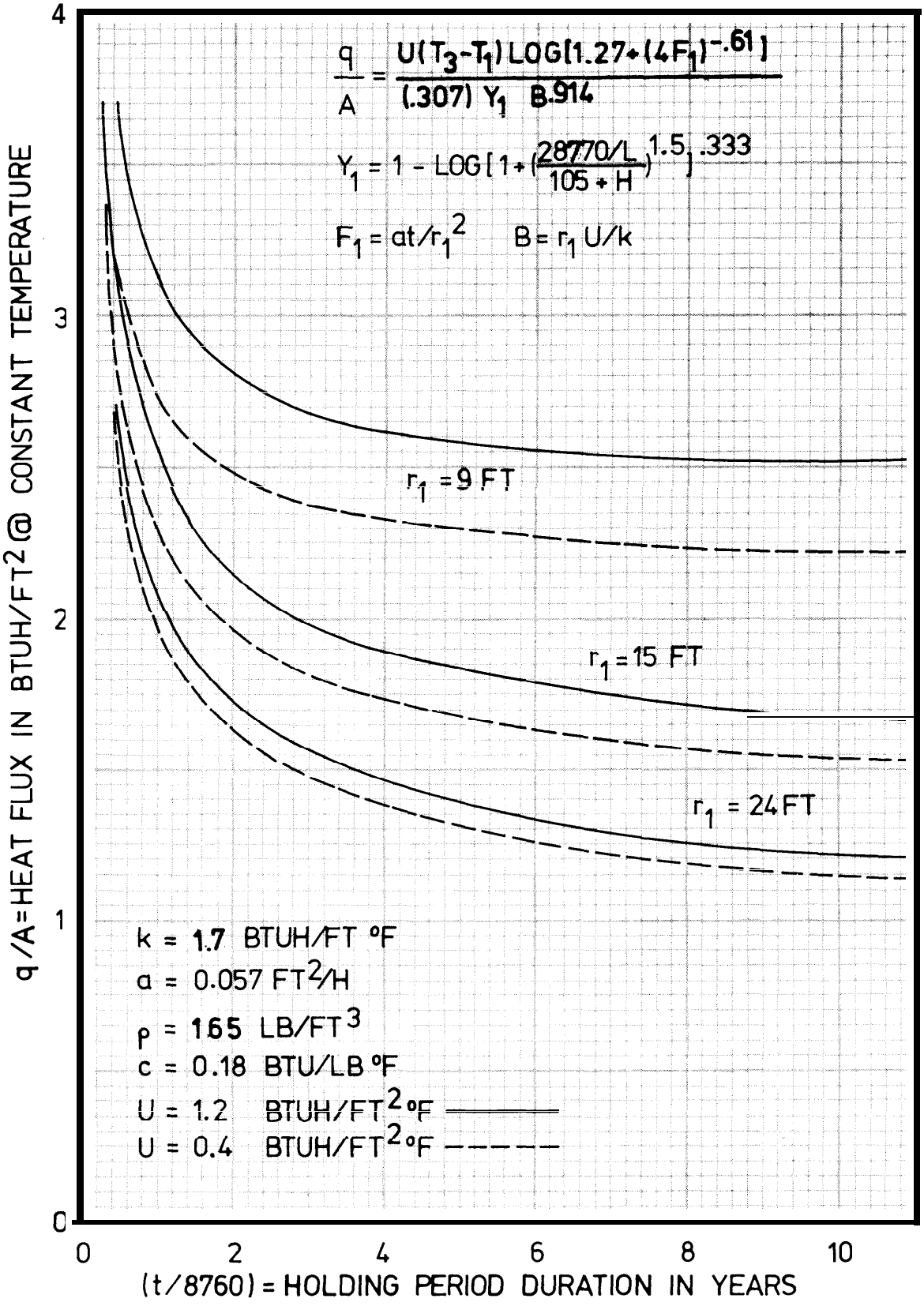


*Figure 3-19. Holding heat flux for k = 1.7 and 25 °F differential.*

## 3-9. Sample problems.

*a. Problem l.*

(1) This problem illustrated the construction of figures 3-16 and 3-18 by selecting from table 3-2 case 1 where $U = 1.2$ Btuh/ft$^2$ °F, $a = .032$ ft$^2$/h, $k = 1.2$ Btuh/ft °F, $L = 100$ ft, $W = 17.5$ ft, and $H = 10$ ft. Because $(L-48)/(W+H) = 152/27.4 = 5.55$ is greater then 2.6, the space is elongated and the cylindrical model is appropriate. From equation 3-2, the wall area is

$$A = 2\,[\,200\,(17.4) + 200\,(10) + 17.4\,(10)] = 11{,}308 \text{ ft}^2$$

From equation 3-4, the equivalent radius is

$$r_1 = 11{,}308 / [2\,(3.14)\,(200)\,] = 9.0 \text{ ft}$$

From equation 3-5, the wall flux ratio is

$$Y_1 = 1 - (1/3)\log[1 + (274/200)^{1.5}\,(1 + 10/105)^{-1.5}\,] = .873$$

(2) For a warm-up period of 20 days, $t_o = 480$ h and by definition

$$F_1 = at_o / r_1^2 = .032\,(480/9^2) = .189$$

From equation 3-12, the rock resistance factor is for $2F_1 = .378$

$$f(F_1) = 2.07 \log[1 + (.378)^{.528}\,] = .421$$

From equation 3-11, the wall flux is

$$q/A = 1.2\,(25) / [\,9\,(.421) + (1.2/1.2)\,] = 6.26 \text{ Btuh/ft}^2$$

(3) After holding one year, $t = 8{,}760$ h and by definition

$$F_1 = at/r_1^2 = .032\,(8{,}760/9^2) = 3.46$$

$$B = r_1\,U/k = 9\,(1.2/1.2) = 9$$

From equation 3-15, the rock conductance factor is

$$f(F_1, B) = (6.5/9)^{.9136} \log[\,1.27 + (.25/3.46)^{.61}\,]^{.59} = .073$$

From equation 3-14, the wall flux is

$$q/A = 1.2\,(25)\,(.073/.873) = 2.52 \text{ Btuh/ft}^2$$

*b. Problem 2.*

(1) The purpose of this problem is to illustrate the load calculation procedures, tunnel air tempering, and the shortcut method for holding operation. Assume there is an underground rectangular space of 1,000 feet long, 720 feet wide, 12.5 feet high, having bare walls, in which a communication center is installed and operated under normal conditions by 300 personnel engaged in light work. The structure is supported by 178 cylindrical pillars of original limestone averaging 550 square feet cross-section per pillar.

(2) Assume that 600 days (t= 14,400 h) have elapsed since the beginning of a holding period at 70° F and 50 percent RH. At this condition there is steady evaporation from the rock at 0.7 grains/ $ft^2$ h. The original rock temperature is 56 ° F, and the 4,500 cfm ventilating air is supplied through a bare rectangular 4 ft by 6 ft rock tunnel that is 4,500 ft long. The outside annual air amplitude is 40 °F. The internal heat load included lighting at 3 W/$ft^2$, 250 hp ventilation fan motors at 91 percent overall efficiency, and 6,000 kW maximum equipment load including the air-conditioning. From table 3-1, assume for the limestone k - .565 Btuh/ft ° F, c = .224 Btu/lb ° F, a = .0163 $ft^2$/h.

(3) Exposed areas, rounded to the nearest 1000 $ft^2$, are estimated as follows:

| | |
|---|---|
| Net ceiling area: 720 (1,000) - 178 (550) = | 622,000 $ft^2$ |
| Wall area: 2 (12.5) ( 1,000 = 720) = | 43,000 $ft^2$ |
| Net floor area: | 622,000 $ft^2$ |
| Subtotal | 1,287,000 $ft^2$ |
| Pillar lateral area: 2 (178) (12.5) (550 $\pi$ ) .5 = | 185,000 $ft^2$ |
| Total exposed area: | 1,472,000 $ft^2$ |

The volume, rounded to the nearest 1000 $ft^3$, of the rock shall for D = 10 ft and L + H + W + 1732.5 ft is by equation 3-17

| | |
|---|---|
| 10 [ 1,287,000 + 20( 1732.5) + (400/3) ] = | 13,218,000 $ft^3$ |
| Add extended pillars 178 (32.5) (550) = | 3,182,000 $ft^3$ |
| V = | 16,400,000 $ft^3$ |

From equation 3-20, the heat flow rate is for 14 ° F rise and D = 10 ft.

$$.565\,(.565)\,(16{,}400{,}000/10)\,(14)\,[\,.016\,(14{,}400)\,]^{-.5} = 482{,}867 \text{ Btuh}$$

With 1050 Btu/lb evaporated and 7,000 grains/lb, the evaporation load is

$$1{,}472{,}000\,(\,0.7/\,7{,}000)\,(1050) = 154{,}560 \text{ Btuh}$$

(4) The approximate outside air density is >075 lb/ft $^3$ or 4.5 lb/h per cfm, the air specific heat c' = 0.2 Btu/lb ° F, and the annual angular velocity fundamental is 360 degrees per year or .000717 radians per hour. The tunnel cross section S - 4 (6) - 24 ft $^2$ and the perimeter P = 2 (4+6) = 20 ft. The outside air flow w' = 4,500 (4.5) = 20,250 lb/h and the air velocity v' = 4,500/24 = 188 fpm or 11,250 fph. The rock-air heat transfer coefficient is according to equation 3-35

$$h' = (11{,}250/8{,}600)^{.8} = 1{,}24 \text{ Btuh/ft}^2 \ ^\circ F$$

Based on equations 3-24 through 3-31, the other constants are

$$G = (.565/20{,}250)\ (4{,}500/0.24) = .523$$

$$r_3 = 2\,(24/20) = 2.4 \text{ ft}$$

$$Z = 2.4\ (.000717/.0163)^{.5} = 0.5$$

$$B = 2.4\,(1.24\,/\,.565) = 5.27$$

$$G_1 = 1.5\,(1 + 4.67/2 - 1/4) - (2/2)\ \log[\,1 + 6/5.27\,)^2\,] = 4.2\,7$$

$$G_4 = .48 + .56/\exp\,(2.27/4)^2 = .886$$

$$G_3 = \log[863\,(5.27)^{1.1}\,\} - 3.8\exp[\,-.847\,(5.27)\,] = 3.69$$

$$G_2 = 0.25 + 3.69\,(.5) - .886\,(.5)^2 = 1.87$$

From equation 3-23 the lag $GG_2$ = .523 (1.87) = .98 radians or 57 days and the amplitude at the tunnel exit is $(T_0 - T_I)$ exp $(-GG_1)$ or

$$40\exp[\,-.523\,(4.27)\,] = 4.3 \ ^\circ F$$

This indicates that after passage through the tunnel the ventilation air is received at 56 °F at the end of December and the end of June, with a maximum of 60 F in early September and a minimum of 520 F in early March. For the purpose of this problem the air maybe assumed to enter the space at the average 56 °F and 95 percent RH, or an enthalpy of 23.19 Btu per lb, which is cooler but more humid than the desired room design conditions of 70 °F and 50 percent RH or an enthalpy of 25.49 Btu/lb. The resulting ventilation air load is then

| | |
|---|---|
| 4,500 (1.08) (70 - 56) = | 68,000 Btuh sensible loss |
| 4,500 (4.5) (25.49 - 23.19 = | 46,600 Btuh total loss |
| Balance | 21,400 Btuh latent gain |

(5) Personnel doing light work will emit 350 Btuh sensible and 310 Btuh latent heat, and the total for 300 people will be

$$300\ (350) = 105{,}000 \text{ Btuh sensible}$$

300 (310) = 93,000 Btuh latent

Lighting, using fluorescent type equipment with an assumed capacity of 3 W/ft $^2$ plus 20 percent ballast heat and 3.4 Btuh/watt, will add

622,000 (3) (1.2) (3.4) = 7,613,280 Btuh

Ventilation-fan motors at K = 250 hp and E = .91 will emit based on equation 2-3

250 (2545/0.91) = 699,176 Btuh

Other equipment load at 6,000 kW will contribute

6,000,000 (3.4) = 20,400 Btuh

The total space load, rounded to the nearest 1000 Btuh, is then

| | Gains | | Losses |
|---|---|---|---|
| *Load Type* | *Sensible* | *Latent* | *Sensible* |
| Conduction | | | 483,000 |
| Evaporation | | 155,000 | 155,000 |
| Ventilation air | | 21,000 | 68,000 |
| Occupants | 105,000 | 93,000 | |
| Lighting | 7,613,000 | | |
| Motor | 699,000 | | |
| Equipment | 20,400,000 | | |
| Subtotal | 28,817,000 | 269,000 | 706,000 |

The excess heat emitted in the space expressed in 1000 Btuh (MBtuh) is then

28,817,000 + 269,000 - 706,000 = 28,380,000 Btuh

This heat must be removed from the space to keep it at design conditions. With water chillers using R-12 refrigerant condensing at 105 ° F, the heat rejection at the condenser is approximately 140 percent of the cooling load or MBtuh. With 12 ° F temperature rise in the condenser water and 500 Btuh per gpm and per ° F rise, the condenser water flow is then approximately 6,666 gpm.

*c. Problem 3.*

(1) This problem considers the emergency operation of the space of problem 2, sheltering 6,000 people in a relatively inactive state with each emitting 300 Btuh sensible and 100 Btuh latent heat (equation 2-8 and 2-9 assuming T = 70 F). During the button-up period, outside power is cut off and ventilation reduced to 5 cfm per person requiring 20 hp at 87 percent overall efficiency to deliver the minimum necessary to support life. Assume that there are separate diesel-electric generators, chemical-type air purifiers for the removal of contaminants, water available from an outside source to supply the air-conditioner's water-cooled condensers and to cool the diesels at 370 Btuh/hp, and lighting levels reduced to 0.5 W/ft$^2$. Use 1 hp per ton (12,000 Btu) of refrigeration.

(2) The heat effects of the rock are the same as in problem 2, but people now emit

6,000 (300) = 1,800,000 Btuh sensible

$$6{,}000\ (100) = 600{,}000 \text{ Btuh latent}$$

The lighting load, using a factor of 1.2 for added ballast heat, is

$$622{,}000\ (0.5)(1.2)(3.4) = 1{,}268{,}880 \text{ Btuh}$$

The cooling done by supplying ventilation air for 6,000 occupants at 5 cfm per person and at 2.3 Btu/lb below the room enthalpy is

$$30{,}000\ (4.5)(2.3) = 310{,}500 \text{ Btuh}$$

From equation 2-4, vent fans at E = .87 and K = 20 hp total add

$$20\ (2545/.87) = 58{,}505 \text{ Btuh}$$

At this point the total load estimate rounded to the nearest 1000 Btuh is

| | *Gains* | | *Losses* |
|---|---|---|---|
| *Load Type* | *Sensible* | *Latent* | *Sensible* |
| Evaporation | | 155,000 | 155,000 |
| Conduction | | | 483,000 |
| Vent fans | 59,000 | | |
| Vent air | | | 311,000 |
| Occupants | 1,800,000 | 600,000 | |
| Lighting | 1,269,000 | | |
| | 3,128,000 | 755,000 | 949,000 |

Net load 3,128,000 + 755,000 - 949,000 = 2,934,000 Btuh or 245 tons exclusive of the parasitic load calculated below.

(3) At 1 hp/ton and .7457 KW/hp the chillers require

$$245\ (.7457) = 182 \text{ kW}$$

To this must be added the power required for lighting at 3.4 Btuh/W

$$1{,}268{,}880/3.4 = 373 \text{ kW}$$

and for ventilation

$$20\ (.7457) = 15 \text{ kW}$$

Total revised electric load is now

$$182 + 373 + 15 = 570 \text{ kW}$$

Additional diesel load based on 370 Btuh or 24 tons

This adds 24 hp to the air-conditioners and in turn 24 (370) = 8,880 Btuh extra diesel cooling load for a total additional 283,000 + 9,000 = 292,000 Btuh. The corrected loads, including the load added by the air-conditioning equipment and the power required to operate it, will be

$$2{,}934{,}000 + 292{,}000 = 3{,}226{,}000 \text{ Btuh or } 269 \text{ tons}$$

(4) The condenser water requirements are based on 10 ° F rise, 500 Btu/gpm ° F, and a 1.4 load factor on the condenser, or

$$(3{,}226{,}000/10)\,(1.4/500) = 903 \text{ gpm}$$

*d. Problem 4.*

(1) This problem illustrates the heat buildup in an underground shelter during emergency operation and without mechanical cooling. The shelter is an inner structure 195 feet long, 45 feet wide, and 17.5 feet high constructed in an underground space 200 feet long, 50 feet wide and 20 feet high, occupied by 200 persons, and cut off for a period of seven days from outside power, air, and coolant. The diesel generators are separate and cooled to the outside. Compressed oxygen is used with carbon dioxide absorption by lithium hydroxide at the rate of 0.124 lb/h per person and emission of 629 Btu/lb sensible and 482 Btu/lb latent heat. Inactive people will each contribute 220 Btuh sensible and 180 Btuh latent heat according to equation 2-8 and 2-9 if T = 78 ° F is assumed. Assume that there is low lighting at 0.25 W/ft$^2$ with a 1.2 factor for ballast and 30,000 Btuh for the vent fans.

The space sensible heat gains are thus

| | |
|---|---|
| Occupants: 200(220) = | 44,000 Btuh |
| Lights: 195 (45) (1.2) (0.25) 3.4) = | 8,950 Btuh |
| Carbon Dioxide Sorbtion: 200 (.124) (629) = | 15,600 Btuh |
| Vent Fans: | 30,000 Btuh |
| Total sensible | 98,550 Btuh |

The space latent heat gains are

| | |
|---|---|
| Occupants: 200 (180) = | 36,000 Btuh |
| Carbon Dioxide Sorbtion: 200 (.124) (482) = | 11,950 Btuh |
| Total latent | 47,950 Btuh |

Total heat gains:

$$Q_0 = 98{,}550 + 47{,}950 = 146{,}500 \text{ Btuh}$$

The air is circulated in the air space between the rock and the inner structure to transfer the room load to the rock.

(2) Disregarding the floor area, which will be covered by blankets and other insulators during the survival period, the modified exposed area will be

$$A = 200\,(50) + 2\,(200)\,(20) + 2\,(50)\,(20) = 20{,}000 \text{ ft}^2$$

The (D = 10) rock shell volume is then from equation 3-17

$$10\,[20{,}000 + 20\,(200 + 50 + 20) + (400/31)] = 255{,}000\ \text{ft}^3$$

The temperature rise factor after 24 hours (equations 3-18) is

$$N = (5/10)\ (24/800)^{.45} = .103$$

Equation 3-18 does overestimate N for t less than 100 h duration and the temperature rise based on N substituted in equation 3-19 will be under-estimated in the calculation below with ($k = 0.565$ and $T_1 = 56$ F).

$$T_2 - T_1 = Q_0\ (.0388)/kVN$$

$$T_2 - T_1 = (24/.103)\,(146{,}500/.565)\,(.0388/255{,}000) = 9.2\ \text{F}$$

$$T2 = 56 + 9.2 = 65\ ^\circ\text{F}\ \text{(underestimated as noted)}$$

(3) The temperature $T_2$ after seven days or $t = 168$ h is

$$N = (5/10)\,(168/800)^{.45} = .248$$

$$T_2 - T_1 = (168/.248)\,(146{,}500/255{,}000)\,(.0388/.565) = 27\ ^\circ\text{F}$$

$$T_2 = 56 + 27.0 = 83\ ^\circ\text{F}\ \text{(acceptable ambient temperature)}$$

*e. Problem 5.*

(1) This problem illustrated the temperature rise in occupied, unventilated underground spaces under disaster conditions (no lights, no power). Compute the temperature rise after 8 days using the standard methods and assume $r_1 = 15$ ft, $k = 1.45$ Btuh/ft °F, $a = .038$ ft$^2$/h, 100 ft$^2$ exposed rock surface per person, each emitting 400 Btuh total metabolic heat, and for 3 values of $U = 0.3$, 0.4, and 1.2 Btuh/ft$^2$ °F.

Under these conditions the constant rock wall heat flux is

$$(q_0/A = 400/100 = 4\ \text{Btuh/ft}^2$$

For $t_0 = 8\,(24) = 192$ h, $F_1 - at_0/r_1^2 = .038\,(192/15^2) = .032$ and from equation 3-36 the temperature rise in °F is given by

$$T_3 - T1 = (4/1.45)\,[\,2.07\,(15)\log(1 + .064^{.528}) + (1.45/U)]$$

$$= (4/1.45)\,[\,.19\,(15) + (1.45/U)\,]$$

$$= 7.86 = 4/U$$

$$= 11.2\ ^\circ\text{F for } U = 1.2$$

$= 17.9\ ^\circ F$ for $U = 0.4$

$= 21.2\ ^\circ F$ for $U = 0.3$

(2) The advantage of the bare shelter ($U = 1.2$) is obvious when compared to the much greater temperature rise of the other structures. This endurance advantage is due to the greater wall conductance of the bare shelter.

# CHAPTER 4

# HVAC EQUIPMENT

## 4-1. General

*a.* Conventional, commercially available HVAC equipment is general adaptable to use in hardened ,. facilities whether aboveground or underground. The equipment reviewed in this chapter is well known to the experienced designers. The comments included are therefore mostly limited to potential areas of application with suggested solutions to the design considerations of chapter 2.

*b.* In a typical system, fresh air is drawn via a tunnel or shaft through an air filter of the conventional type and a CB filter; then it is drawn through a tempering coil. If close control of humidity is required in temperate and aired areas, the air will be passed through an air washer *or* sprayed coil during the summer months. In most cases, such high maintenance devices are not necessary since cooling coils are sufficient for summer dehumidification and duct-type steam humidifiers for winter humidification.

*c.* The conditioned outside air is ducted to various rooms or zones where zone air handling units or built-up units containing heating and cooling coils, filter, and fans will ingest, mix and condition the fresh and return air prior to distribution to the conditioned spaces. Special purpose areas with low humidity and wide temperature range requirements, such as storage areas for machinery, may be conditioned with chemical or mechanical dehumidifiers.

## 4-2. Air cleaners.

*a. Criteria.* The criteria for air cleaners in a hardened facility will address the removal of airborne contaminants from outside air brought in for air breathing equipment, environmental air within the structure, and outside air brought in for human consumption. Each requirement is unique in that the contaminant characteristics and the required filter efficiencies vary for each application.

*b. Air washers.* Air washers are used primarily in industrial air-conditioning. A central station air washer is bulky and requires more space than conventional coils and chiller. For this reason, an air washer will not be cost effective if installed in hardened facilities which require excavation of rock. Air washer design is covered in ASHRAE Handbook, Equipment.

c. *Dust separators.* Dust separators will be utilized to remove normal airborne contaminants during standby operation. Usage under other circumstances is not recommended due to decontamination and disposal problems.

*d. Air filters.* ,

(1) Industrial ventilation will generally require only removal of the coarser air dust particles. Administrative areas and areas, containing equipment sensitive to dust buildup will require removal of the smaller components of atmospheric dust. Cost, space, pressure drop, and effectiveness determine filter and filter media selection. Electronic air cleaners or high efficiency dry filters will be used for small particle removal. For critical installation, such as deep buried facilities, redundant high efficiency filter banks will be provided with provisions to keep one filter bank on stream while the other is being serviced.

(2) To increase the useful life of the high efficiency filters, prefilters will be installed particularly in areas of high dust concentration. Prefilters will also be installed upstream of the tempering coils to eliminate dust buildup downstream. At rated flow, the pressure drop will not exceed 0.3 in. wg when the unit is clean. Special electrostatic or other types of self-cleaning filters are not recommended; conventional disposable units are preferred. Prefilter installation will permit easy removal and replacement of the prefilters without undue leakage. Filters having a 90 percent efficiency for the removal of 50-micron particles will suffice if fallout protection is the only consideration.

(3) Automatic filters of the moving-curtain or replenishable-media-type will be used for remote installations because of the small amount of attention they require. This type of filter will also be used as a prefilter or medium efficiency filter to save space, or for large airflows. For medium and high efficiency requirements replaceable cells of the dry media type will otherwise be used. Typical performances are summarized in table 4-1. Air filters are also covered in the ASHRAE Handbook, Equipment.

*e.* Air purifiers. Air purifiers will be installed on the return air system in hardened facilities to remove tobacco smoke and objectionable odors from areas such as toilets and kitchens when the facility is in a button-up condition. Normal odor control is by dilution of return air with fresh air. Activated carbon filters are normally installed in a bypass section of the return air ducts and are activated by means of motorized dampers when the button-up signal is received. The commercial carbon filters normally used in this application are not suitable for CB service because they do no contain carbon specifically treated to sorbe CB agents.

TABLE 4-1

Performance of Dry Media Particulate Filters

| Parameter | Classification | | |
|---|---|---|---|
| | Medium | High | Extreme |
| o Efficiency range, percent | | | |
| Typical atmospheric dust | 40-75 | 80-99 | 100 |
| 0.3 micron particles | 10-40 | 45-95 | 99.95 |
| 1.0 micron particles | 40-70 | 75-99 | 99.99 |
| 5.0 micron particles | 85-95 | 99.90 | 100 |
| 10 micron particles | 98.99 | 99.99 | 100 |
| o Pressure drop, in. wg | | | |
| minimum clean | .10 | .20 | 1.0 |
| minimum loaded | .25 | .50 | 2.0 |
| maximum clean | .25 | .45 | 1.5 |
| maximum loaded | .50 | .99 | 3.0 |
| o Dust capacity, lb/1000 cfm | | | |
| minimum | 1 | 1 | 2 |
| maximum | 2 | 5 | 10 |
| o Face velocity, fpm | | | |
| minimum | 250 | 250 | 150 |
| maximum | 625 | 625 | 300 |

## 4-3. CBR filters.

*a*. CBR filters are required in hardened structures to exclude DBR agents and particles from the conditioned spaces. The portion of outside air to be filtered at all times through CBR filters depends the requirements of the occupied areas that must be protected within the facility. This protection must be continuous and no CBR filter bypass will be allowed.

*b*. For installation in a permanent -type structure having air-conditioning or a simple recirculation system, specific filters will be procured instead of complete filter units with motor blowers to permit a more flexible and uniform design of the air-handling equipment, particularly when multiple filter units are required. Table 2-4 and 2-5 and figures 4-1, 4-2, and 4-3 describe these filters and their assembly in a typical package. The FFU-17/E, C22R1, or C32R1 gas filters and the M20 particulate filter are recommended. These sizes can be handled more easily by maintenance personnel.

c. Extra care must be taken to ensure good sealing of leaks at the entrance and exit ends of the filter. Special maintenance and testing requirement will be as required by AMCCOM.

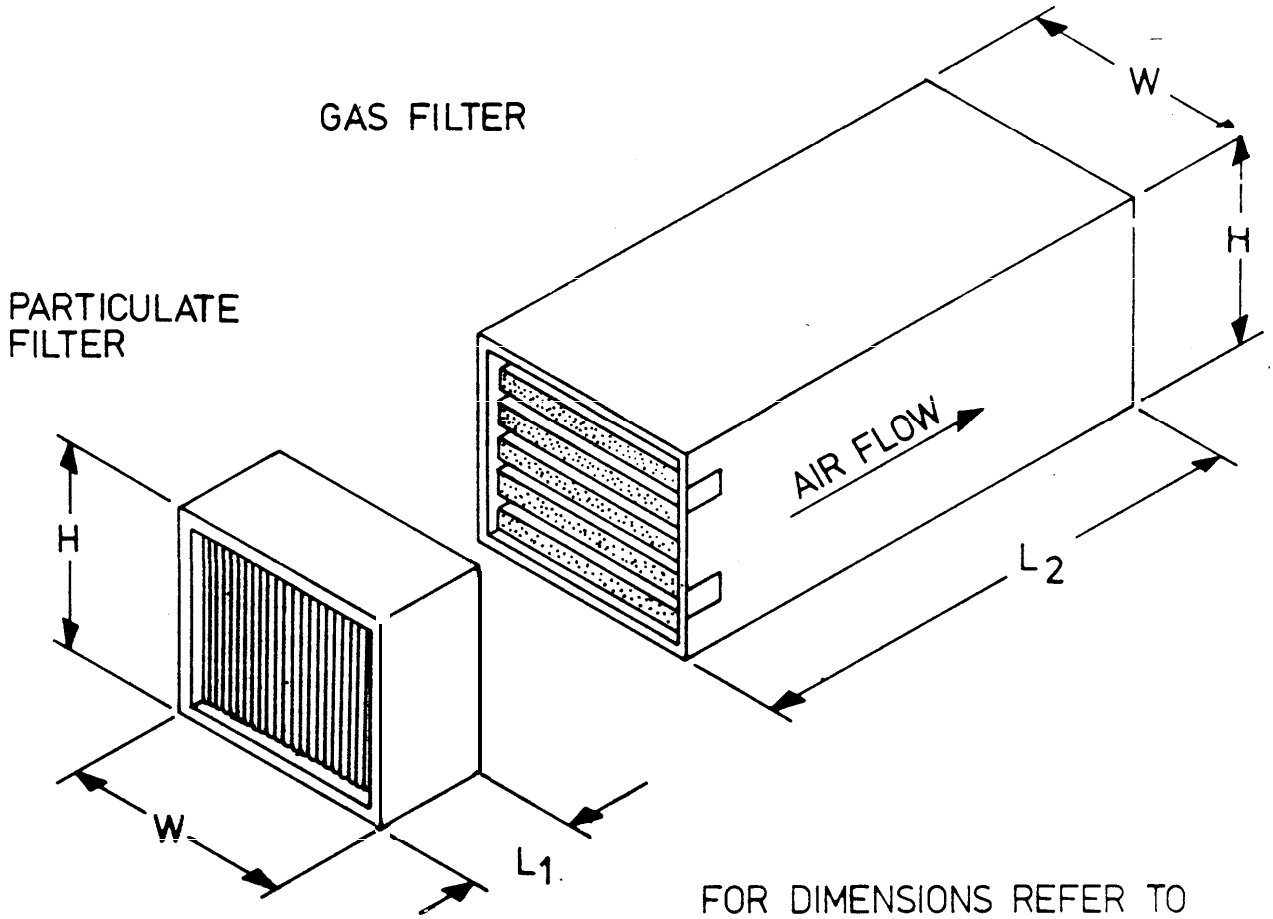


FOR DIMENSIONS REFER TO
TABLES 2-4 AND 2-5.

USE GASKETS AS REQUIRED
BETWEEN ELEMENTS FOR
GASTIGHT ASSEMBLY.

U.S. ARMY CORPS OF ENGINEERS

*Figure 4-1. CB particulate and gas filter.*

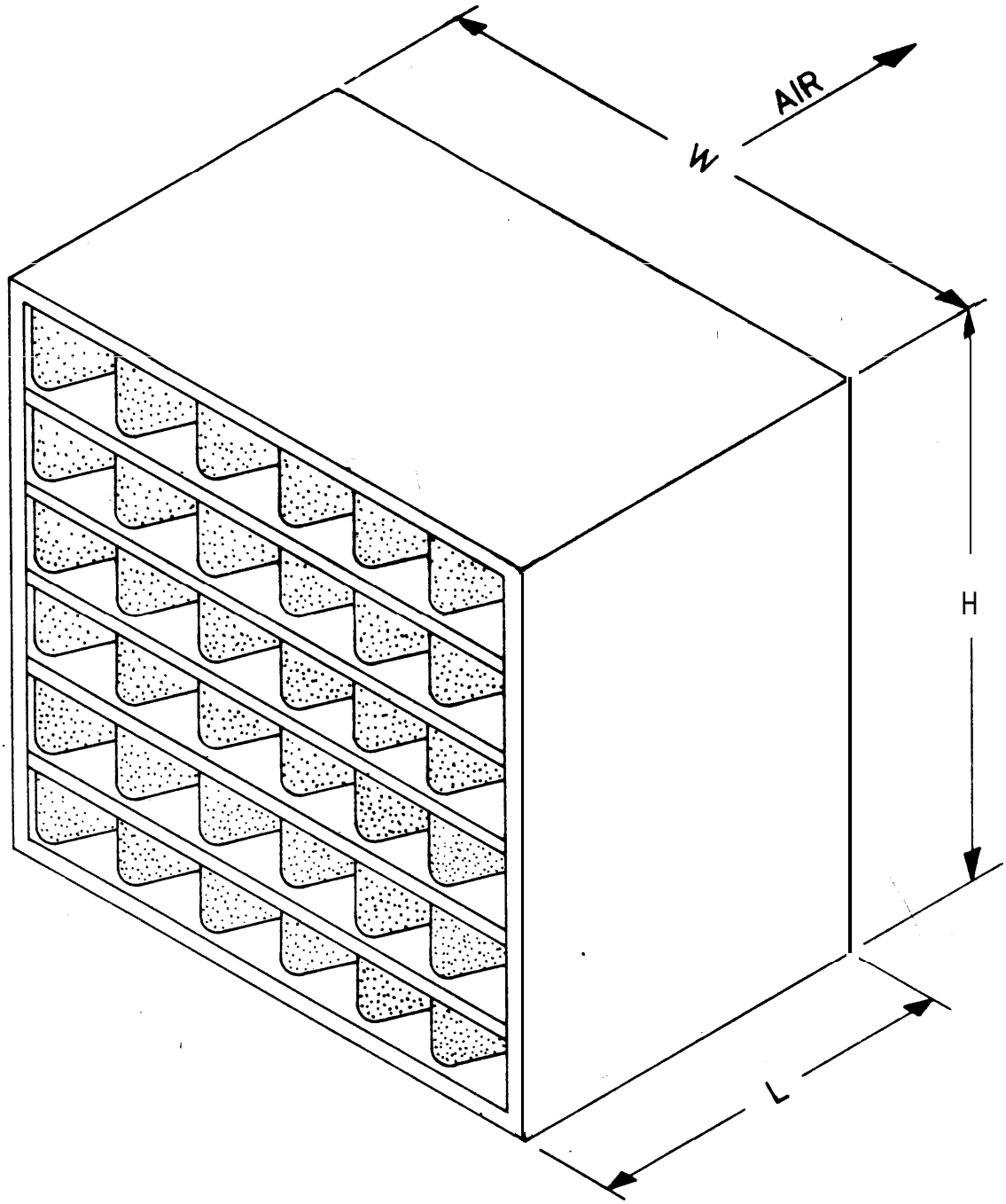


FOR DIMENSIONS REFER TO TABLE 2-5.

U.S. ARMY CORPS OF ENGINEERS

*Figure 4.2. CB gas filter model FFU-17/E.*

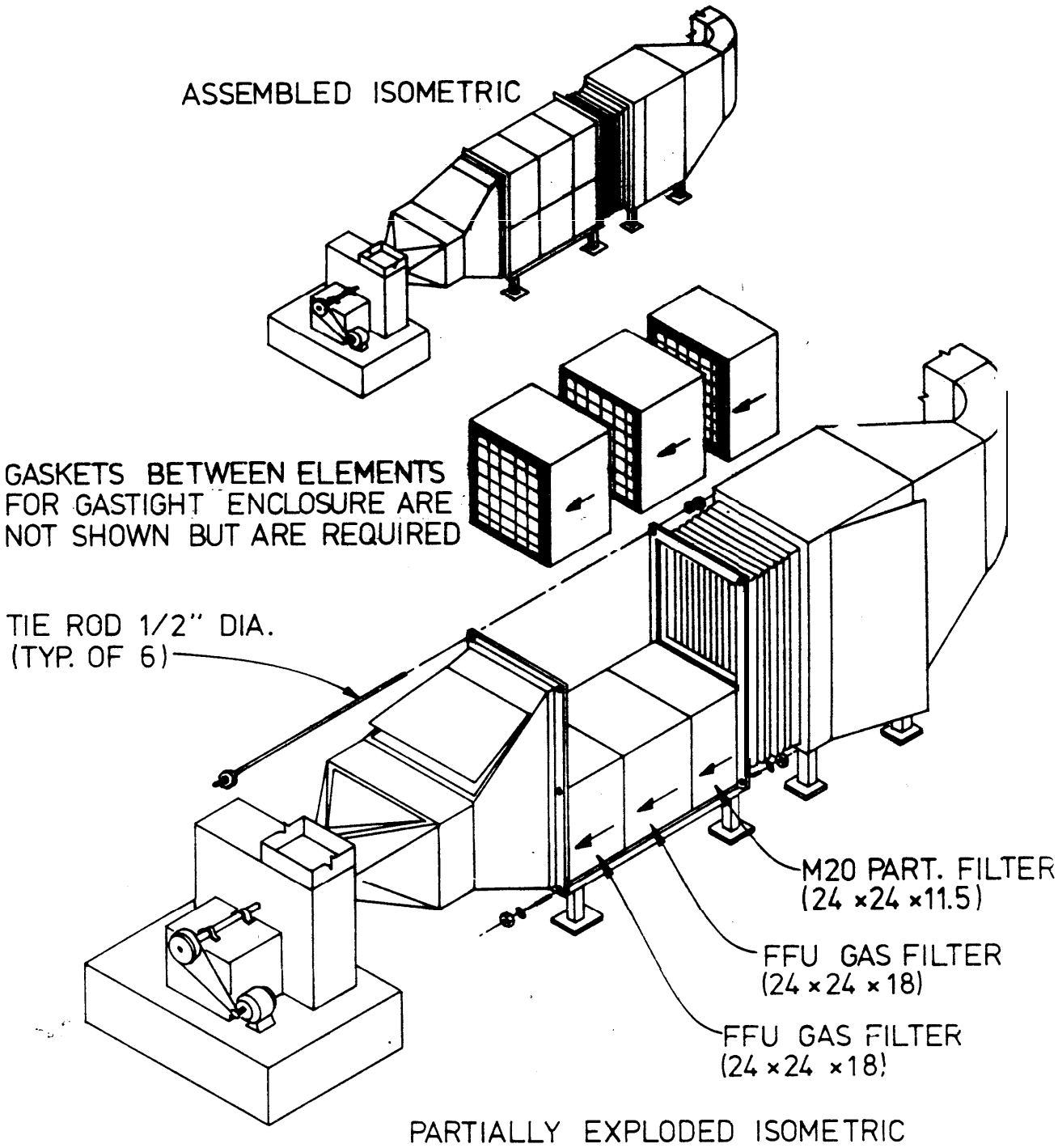


U.S. ARMY CORPS OF ENGINEERS

*Figure 4-3. CB filter assembly.*

## 4-4. Coils and piping.

*a. Tempering coils.*

(1) Tempering coils are normally installed in makeup air units. The tempering coils is used to heat the outside air in winter to prevent condensation on ducts and to prevent freeze-up of heating and cooling coils in downstream air handling units.

(2) Steam tempering coils require careful design to prevent freeze up of the coil. Design considerations will include large tubes of the steam distributing type, mounted vertically, with full steam pressure on the coils at all times. Face and bypass dampers controlled by a downstream duct-mounted thermostat, will be used for controlling the tempered air temperature. Controlling temperature with a modulating steam valve is not acceptable because of the danger of freeze-up.

(3) Hot water tempering coils, utilizing a heat exchanger to maintain water temperature, a coil pump to maintain flow, and thermostatically controlled face and bypass dampers can function successfully in extreme weather with proper controls and alarms. A mixture of water and antifreeze will be circulated through the coils to minimize the possibility of coil freeze-up should the controls or pump fail. The coil and the heat exchanger will be sized including the derating due to the added antifreeze component.

*b. Air heating and cooling coils.*

(1) Each hardened structure will be zoned and provided with at least one or more air-handling units for cooling and dehumidification. For underground facilities under conversion, the primary problem is one of dehumidification and reheat. During holding, the dehumidification load decreased, but the cooling load increases. Both the cooling and the reheat coils will therefore be provided in two sections. For cooling and dehumidification, one six-row section and one four-row section will be used, while for reheat a four-row section and a two-row section will be selected. In this way the air-handling units can meet the unusual load requirements for either dehumidification or cooling.

(2) Use of chilled water in unit-air-conditioners for individual rooms or zones has the advantage of simplicity and flexibility of control. Chilled-water lines that pass through spaces with high dewpoints or which are air-conditioned will be insulated to prevent condensation. Temperature control will be accomplished by starting and stopping the fans in the units, by means of dampers to control the airflow through the cooling coils, by regulating the flow or temperature of chilled water to the coils, or by a combination of these methods. Heating coils will be installed in the air-conditioning units along with the cooling coils, if desired.

(3) For central chilled water system and when. cooling is critical to the mission of the facility, a loop-type system of chilled water distribution will be provided with necessary valving to isolate loop segments in case of failure of a portion of the system.

*c. Piping.* The design of all piping systems and materials used in a hardened facility will conform with nationally recognized codes, standards, manuals, and recommended practices. Flexible connectors, vibration eliminators, and expansion joints will be utilized to connect piping to HVAC equipment which is subject to movement. Piping passing to and from RFI exclusion or containment areas will be designed to preclude transmission of the RFI waves. Hydraulic transient pressures are covered in TM 5-858-5. In-line-flow-through attenuators of the precharge-bladder-type are available in a wide range of sizes and pressures. Figure 4-4 shows the construction features of a typical flow-through, hydropneumatic, bladder-type attenuator.

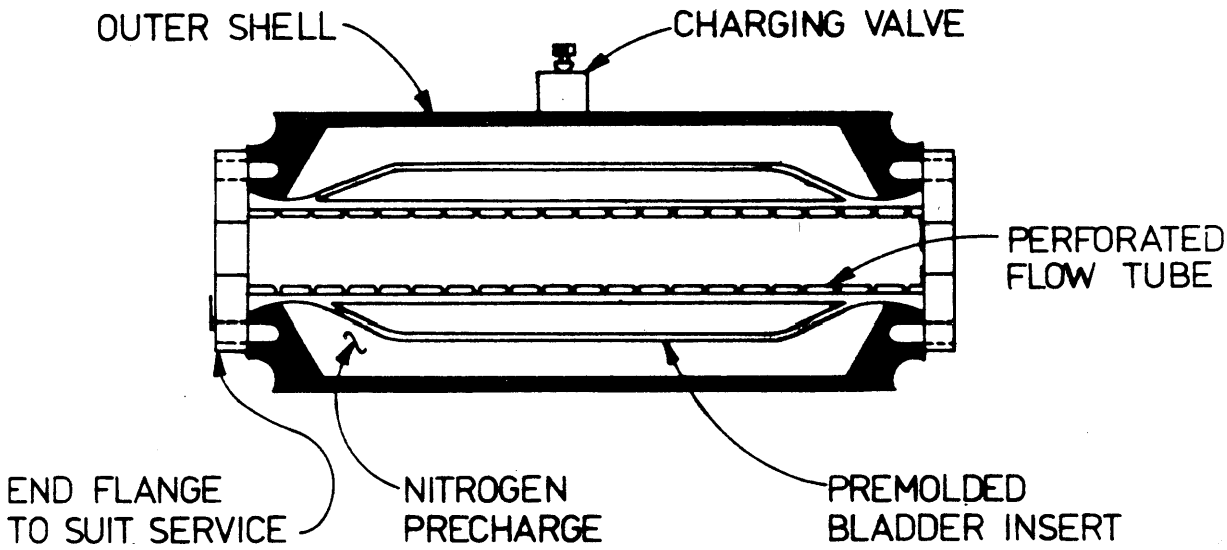


U.S. ARMY CORPS OF ENGINEERS

*Figure 4-4. Bladder-type attenuator for chilled water.*

## 4-5. Refrigeration equipment.

*a*. The refrigeration cycle can be used for both cooling and dehumidification by absorbing heat at the evaporator and for heating by rejecting heat at the condenser. A chilled-water system is preferable for underground installation because breaks or leaks in the distribution lines will not create a critical condition within the structure, either from the standpoint of the replacement of the coolant or the generation of potentially dangerous gases.

*b*. Provision will be made for at least one or more water chiller units complete with motor, compressor, condenser, and evaporator for each structural unit to be conditioned. Refrigerant compressors of the reciprocating type will have three stages of capacity reduction. Centrifugal type units will have a capacity control system providing for continuously variable capacities of from 10 to 100 percent. Absorption type units will have automatic steam generation and control Water chiller units of the same type will be interconnected to ensure maximum utilization of capacity control.

*c*. If the supply of condenser water is drawn from underground wells or reservoirs, the chemical content of this water must be analyzed to determine the fouling factor which must be considered in the condenser design and in determining the requirement for water treatment equipment in the system.

## 4-6. Fans.

*a*. Underground facility design requires a powered air moving device such as a fan for ventilation and exhaust. Standard fan designs are available for most fan requirements. Heavy-duty ventilating fans will be used for more severe conditions.

(1) Fan type selection depends on application. When space is not a factor centrifugal fans will backwardly curved and air foil shaped blades will be used for maximum efficiency. Vaneaxial fans are used when space is at a premium and nonturbulent inlet conditions can be obtained. The use of inlet vane straightness for this purpose is recommended. Propeller fans are generally limited to applications requiring 2 in. wg will be mounted on inertia blocks.

(2) In selecting the proper fan, consideration will be given to airflow, head pressure, noise, and available space. In the majority of protective structures, space will govern fan selection. However, space must be balanced against noise and efficiency of operation.

*b*. In selecting the proper fan, consideration will be given to airflow, head pressure, noise, and available space. In the majority of protective structures, space will govern fan selection. However, space must be balanced against noise and efficiency of operation.

(1) Head pressure requirements will be determined carefully, particularly with regard to seasonal variations of the air temperature, CB filters and such other items as blast-closure valves, prefilters, and structure pressurization. Because of the high efficiency of the CB filter, it is recommended that the higher resistance of 6 in. wg be used in determining fan capacities:

(2) Noise is of major importance in a closely occupied structure. Therefore, duct work and fan mounts will be carefully designed. Ducts will be connected to fan and filter inlets and outlets by means of butyl rubber or butyl coated nylon cloth material. Main supply fans will be remote from occupied areas and provided with resilient sound-absorbing bases. Noises due to high-velocity ducts, abrupt turns, and rigid connections to fans will all be considered. Where high-velocity minimum-size equipment must be used, an adequate acoustical and vibration treatment will be employed.

(3) ASHRAE Handbook, Equipment, will be consulted for fan sizing, selection, application, and control. Parallel start and operation of fans will be done in accordance with fan manufacturer's recommendation in particular when using pitch controlled vaneaxial fans.

## 4-7. Duct systems.

*a*. Ducts which may carry contaminated air or run through areas which may become contaminated will be gastight. Duct systems will be designed within prescribed limits of available space, friction loss, noise level, heat loss or gain, and pressure containment. Both high velocity and low velocity duct systems will be designed in accordance with ASHRAE Handbook Fundamentals. The aspect ratio R of rectangular ducts defined as the ratio of the longer to the shorter side of the cross-section is an important parameter in the optimization of duct systems.

*b*. The economic factors of first cost and operating cost will be evaluated in conjunction with available space to determine the best duct system. Each application is different and will be analyzed separately. Normally square or round ducts will be preferred to rectangular ducts of larger aspect ratio because they are less subject to heat pick up and more economical as shown below.

(1) L feet downstream the temperature pickup ($T_L - T_1$) of V' cfm of air flowing in a duct of aspect ration R (use R = 0 if round), conductance U in Btuh/ft$^2$ °F (use U = 1 if uninsulated and 0.5 if furred in), cross section S in ft$^2$, exposed to a space temperature $T_a$ is approximately

$$(T_L - T_1) = (T_a - T_1)(LUS^{.25})[1 + (R/10)](5V')^{-.68} \qquad \text{(eq 4-1)}$$

(2) The installed cost of a round duct of same cross-section is less than 70 percent of the corresponding square duct. For rectangular ducts of aspect ratio R, the incremental first cost fractions ($I_1$) and operating cost fraction ($I_0$), relative to a square duct at the same airflow, are given respectively by equation 4-2 and equation 4-3.

$$I_1 = .125(R-1) \qquad \text{(eq 4-2)}$$

$$I_0 = .0008(R-1)^2 \qquad \text{(eq 4-3)}$$

*c.* A low-velocity duct system using rectangular ductwork is practical in hardened industrial facilities where space is of secondary importance. Fan horsepower increases approximately as the square of the velocity and noise generation increases with the velocity; therefore, the velocity will be kept low for quiet and economical operation. Standard ducts will be constructed in accordance with Sheet Metal and Air Conditioning Contractor's National Association (SMACNA) Duct Construction Standards.

*d.* A high-velocity duct system is often most practical in a facility where space is at a premium. High-velocity systems have velocities in excess of 2,000 fpm and from 6 to 10 in. wg static pressures. The design of a high-velocity system involves a compromise between reduced duct sizes and higher fan horsepower. The reduced duct size and space requirements cut initial excavation costs but increased fan power means higher operating costs. High-velocity ducts can be used anywhere in an air-conditioning system as long as means are provided to control flow and attenuate sound at the air outlets. Ducts will be constructed in accordance with SMACNA Duct Construction Standards.

## 4-8. Humidity control systems.

*a. Criteria.* The selection and application of humidification and dehumidification equipment involves the evaluation and consideration of both the environmental criteria for the occupancy or process and the characteristics of the facility enclosure. These may not always be compatible in an underground structure and a compromise solution will be necessary.

*b. Humidifiers.*

(1) Process control and material storage humidity control conditions are usually specific and are related to the control of moisture, rate of chemical or biochemical reactions, rate of crystallization, product accuracy or uniformity, corrosion, and static electricity. Typical conditions of humidity for the storage of certain materials may be found in table 2-3.

(2) Industrial humidifiers for central air-handling systems usually incorporate a heated water pan or direct steam injection. Heated pan-type humidifiers offer a broad range of capacity and are heated by an electric element or steam or hot water coil. Controls and maintenance of humidifiers installed underground will conform to the standard practice for aboveground structures.

*c. Dehumidifiers.*

(1) Because of the difficulty of estimating accurately the total anticipated moisture loads, design of the moisture-removal systems will provide for two types of installation. A permanent system will be provided to handle loads imposed by the end-use requirements of the structure after the conversion period. A temporary or semi-permanent system will be provided to handle excess loads during conversion and to provide auxiliary capacities in case of breakdown.

(2) A mechanical dehumidifier consists of a refrigerating machine so arranged that air passes through a cooling coil and then through the condenser. The air, first cooled and dehumidified by the cooling coil, picks up the heat rejected by the condenser. In this process, moisture removed from the air by the cooling coil is drained away as' a liquid but the air is reheated by the heat equivalent of the power delivered to the machine. Machines of this type are very useful in spaces with considerable latent loads and in which moderate heating is either desireable or of no consequence. They have an advantage over chemical dehumidifiers in that the condensate is drained away as liquid through pipes, rather than exhausted as vapor in the air through ducts.

(3) The chemical-sorbent or dessicant-type dehumidifier is not ordinarily affected by temperature levels and will operate effectively over a wide range of temperatures. Solid dessicant units require only power hookups and exhaust outlets for discharging moisture vapors from the dessicant beds during the heating or regeneration cycle. Liquid dessicant-type equipment usually requires auxiliary steam for the treatment of the moisture-laden dessicant. Solid dessicant equipment generally returns more heat through the dried air stream to the occupied space than the liquid-dessicant-type. These and other equipment selection factors are covered in ASHRAE Handbook, Equipment.

## 4-9. Computer area cooling.

*a. Criteria.* Command centers, radar installations, missile launch facilities and similar areas will generally contain computers and ancillary equipment which are sensitive to extremes of temperature, humidity, and the presence of dust. The environmental criteria requirements for computers and for areas housing the machines will vary widely with the computer manufacturer and the computer cooling configuration.

*b. Air-cooled computers.*

(1) Air-cooled units will have either cooling air drawn from the room and circulated through the unit by an internal fan; air forced through the unit by fans from a remote central supply system; or self-contained computer room air-conditioner units within the computer room. The latter two systems utilize under-floor ducts or plenums to supply the computer units with cooling air. Vertical space is at a premium in underground facilities. This is reflected in the height of raised-floor plenums. Therefore, particular attention must be given to the following:

- Locating the computer room units preferably in center of room.
- Keeping cables and wire bundles from blocking the airflow.
- Large room underflow ducting for uniform air distribution.
- Controlling supply air dewpoint to prevent mildew and fungus.

(2) Remote central air supply systems will multiple fans for reliability are more adaptable for hardened facilities than unitary units. The requirements for complete redundant unitary units for reliability and the necessity of routing condenser water lines in the computer room for unitary units will influence the computer air-cooling system selection to favor a remote central air supply system. The necessity of repairing the unitary equipment in the computer area is an additional detriment.

(3) The ASHRAE Handbook, Applications lists the typical design conditions for computer room cooling systems; however, the equipment manufacturers' requirements will govern.

*c. Water-cooled computer equipment.*

(1) Some computer equipment on the market requires cooling water to remove a portion or all of the heat generated within the cabinets. The cooling water system configuration within the cabinets will vary, but in almost all cases, the cooling media circulating within the cabinets will be distilled or demineralized water. Computers may be furnished with integral closed-loop. cooling systems made up of water to water heat exchanger and pump, or the demineralized water may be pumped to the computer cabinets from central demineralized water/ chilled water heat exchangers.

(2) Some computer systems are cooled by circulating demineralized water from a central system through electronic racks at pressure below atmospheric pressure. The system is designed to ingest air into the cooling water circuits, should a leak occur, in lieu of leaking water onto the rack electronic components, as would be the case with a system operating at a positive pressure.

(3) Leak detection devices should be installed in the plenum beneath the computer floor to warn of leaks in the cooling water lines. All critical functions such as water flow, pressure, and temperature should be monitored locally and remotely for each computer cabinet.

## 4-10. Boilers and heat recovery.

*a.* The requirement for supplemental heating will be greatest when the facility is on standby. The major requirements for heating during normal operation will be heating fresh air to interior design conditions and for reheating.

(1) The greatest liabilities of combustion type boilers are space, combustion air, and flue gas requirements, which eliminate them from consideration for underground service. For aboveground facilities, fuel and ash handling requirements and the necessity to shut the boiler down and button-up on short notice render coal-fired boilers unsuitable but oil fired package boilers are acceptable for aboveground service.

(2) In industrial facilities where process steam is required, medium or high pressure steam boilers are recommended. Electrically-heated steam boilers are well suited for hardened facilities having a large demand for humidification steam in the wintertime.

*b.* As a rule, where diesel-engine jacket water waste heat is recovered in conjunction with waste heat recovery from the exhaust gases, a hot water boiler is the logical choice. It is estimated that heat recovery mufflers on the exhaust stack and jacket water heat exchangers can recover 20 to 30 percent of the input fuel energy which is rejected in exhaust gasses and jacket water. The recovered energy can be transferred to a hot water or low pressure steam system to heat domestic hot water and the facility. The quantity of low pressure steam powered by flash vaporization of the jacket water is equal to the heat recovered divided by the difference between the steam enthalpy and the enthalpy of the feedwater returned to the flash tank.

c. The combustion gas exhaust temperature must be kept above its acid dewpoint to prevent corrosion of surfaces in contact with it. Unless the fuel contains no sulfur, a 300 $^{0}$F acid dewpoint is usually assumed. Diesel engine jacket water design will not exceed 2500 F, 45 psi, and 150 F temperature rise to minimize thermal stresses on the engine. To avoid leaks and over pressure, the primary circulation loop of the jacket water will be limited to local heat exchangers to transfer the salvaged heat to separate secondary heating circuits. Another 5 percent of the total fuel input energy may be recovered from the lube oil system, but at lower temperature levels than the water jacket since the lube oil operating temperature cannot presently exceed 200 $^{0}$F while maintaining reasonable lube oil life.

# CHAPTER 5

# WASTE HEAT DISPOSAL

## 5-1. Heat sinks.

*a.* In a hardened installation, the designer will provide a means of transferring the waste heat from the equipment either to the atmosphere, via cooling towers, radiators, etc., during normal operations or to a hardened heat sink during the button-up period.

(1) The vulnerability to attack of surface cooling water sources such as a river, pond, or shallow aquifer will require a hardened facility to include cooling media storage that is available throughout the attack period.

(2) A number of research studies have been conducted to explore various methods of waste heat storage that are compatible with the overall requirements of the installation. These studies have considered the use of water, chilled water, chilled brine, rock, ice, and soil as heat sink materials. Water and water/glycol systems have been constructed and successfully tested in existing facilities.

(3) Spaces for underground water reservoirs in deep-buried facilities are usually dug in a long tunnel configuration for reasons of economy in excavation and to provide the necessary rock-surface area for heat transfer. In the calculations that follow, the tunnel shape is assumed and the cylindrical approximation is used.

*b.* When evaluating heat sinks, it is worthwhile to consider the use of hardened diesel fuel storage for extra heat sink capacity. The economics of installing extra equipment and controls in the fuel oil system will be balanced against increasing the size of the water-heat sink. Heating the diesel fuel will increase the efficiency of the prime mover, but there are some disadvantages.

(1) The specific heat of diesel fuel is approximately 0.5 Btu/lb $^{0}$F, which is half that of water. Diesel fuel weighs 7.0 to 7.5 lb/gal, while water weighs 8.34 lb/gal. Thus, a gallon of diesel fuel has less than half the heat absorbing capacity of a gallon of water.

(2) No. 2 diesel fuel has a flash point of approximately 125 ° F. As the fuel reached this temperature, some of the more volatile components of the fuel will vaporize and create a safety hazard. These safety considerations limit the temperature of diesel fuel sinks to a maximum temperature of 900 F to 1000 F.

*c.* For convenience, and unless otherwise noted, the coolant fluid will be termed “water” in the remainder of this chapter. In the equations, however, the density and the specific heat of the coolant will be indicated by the usual symbols but with an asterisk to permit calculations with other coolant fluids than water.

(1) The maximum allowable coolant temperature is a major consideration in the design of heat sinks. Condensers of refrigeration equipment allow an entering water temperature as high as 100 “F to 1100 F. Higher temperature will reduce efficiency and are damaging to the refrigeration equipment. Heat exchangers of prime movers such as diesel engines will allow entering water temperatures up to 160 $^{0}$F. or higher.

(2) Because of the difference in the allowable water temperature rises, separate reservoir systems will be designed to receive heat from the two separate heat sources. The two reservoirs will be proportioned in their respective loads, so that when the diesel reservoir is emptied, the engine can be cooled by water wasted from the AC compressor unit condensers, until this supply has also been exhausted.

## 5-2. Once through and recirculated reservoirs.

*a.* Waste heat from the power or weapon system equipment may be rejected by drawing water from the hardened heat sink reservoir, circulating it through the heat source one time, and then discharging the water to the outside. Normally, the water is stored at the ambient temperature of the surrounding rock; but stored chilled water may be kept in an insulated container with a small refrigeration unit to compensate for heat leak.

*b.* A full reservoir of volume V at temperature $T_0$ with allowable wasted water discharge temperature $T_1$ represents a total cooling capacity $q_0$ which, when spent at constant heat rejection rate $q_0$ until empty, will allow to hours of operation. Any one of these parameters may be computed from the following heat balances when the others are known:

$$Q_o = t_o q_o = V\rho^* c^* (T_1 - T_0) \qquad \text{(eq 5-1).}$$

*c.* If the water is recirculated from the reservoir to the engine jacket or condenser and back to the reservoir, the heat-absorbing capacity of the water is increased by the heat-absorbing capacity of the surrounding rock because the warmer water returning from the equipment increases the reservoir's temperature above that of the rock.

(1) To obtain the best effect from a reservoir used as a short-time heat sink, water will be taken from the lowest point in the reservoir and heated water discharged to the highest point. The warmest water will stratify in the upper levels, while the water taken from the bottom will be the coldest available for cooling purposes.

(2) When the water temperature reaches its maximum allowable temperature, the water of the reservoir is wasted outside the installation. The time to waste the water can be determined using equation 5-1.

(3) During the initial period when the effective capacity is enhanced by heat transfer to the rock, empirical equation 5-2 is used for the reservoir of length L, allowed to heat from $T_2$ to $T_3$ in a specified time $t_1$. The reservoir's constant effective heat absorption rate $q_1$ in Btuh during this period is then

$$q_1 = [kL/f(F_1, X)](T_3 - T_2) \qquad \text{(eq 5-2)}$$

where $f(F_1, X)$ acts as a thermal resistance factor. As in Chapter 3, this function of dimensionless parameters $F_1$ and X conceals the terms of the exact transient analysis, and is computed as follows

$$f(F_1, X) = .001 + (0.1)\log[1 + (F_1/F_0)^b] \qquad \text{(eq 5-3)}$$

$$F_0 = .055 + .225/X - .025\exp(-7/X) \qquad \text{(eq 5-4)}$$

$$b = 1.11 - .352\exp(-7.4/X) \qquad \text{(eq 5-5)}$$

$$X = 2\pi r_1^2 (1/S^*)(\rho c/\rho^* c^*) \qquad \text{(eq 5-6)}$$

$$r_1 = P/2\pi \qquad \text{(eq 5-7)}$$

In these equations, $F_1 - at_1/r_1^2$ is by definition the Fourier number based on $t_1$ in hours, X a dimensionless parameter proportional to the ratio of the heat capacitance of the rock and the reservoir, $r/_1$ the equivalent radius in ft based on sidewall area PL of the reservoir, and the S* the reservoir coolant cross section in $ft^2$.

*d.* It may be necessary to maintain a reservoir at a temperature below the initial rock temperature to provide additional heat-absorbing capacity for an emergency period.

(1) The rate of heat removal $q_2$ from the water necessary to first lower the reservoir's temperature from $T_4$ to $T_5$ in a given period of time $t_3$ is computed from equation 5-2 replacing the temperature rise $(T_3 - T_2)$ by the temperature drop $(T_4 - T_5)$ and $F_1$ by $F_3 = at_3/r_1^2$ based on $t_3$ as shown by equation 5-8.

$$q_2 = [kL/f(F_3, X)](T_4 - T_5) \qquad \text{(eq 5-8)}$$

(2) When the desired water temperature $T_5$ has been reached, further heat must be continually removed from the water to offset the heat gain from the surrounding rock while maintaining the reservoir at $T_5$. This heat gain $q_3$ is proportional to the design cool down temperature drop $(T_4 - T_5)$ and decreases with time as shown by equation 5-9.

$$q_3 = kL(400/F_4)^{.31}(T_4 - T_5) \qquad \text{(eq 5-9)}$$

where $F_4 = at_4/r_1^2$ is the familiar Fourier number based on the time $t_4$ elapsed since the beginning of the holding period at the design temperature $T_5$ of the cold reservoir.

## 5-3. Iced Reservoirs.

*a.* As the term implies, iced reservoirs are reservoirs cooled down to the point where ice can coexist with the water. The heat sink capacity of an iced reservoir is greatly increased by the ice accumulated in it.

(1) As mentioned previously, the difference in acceptable cooling water temperatures for refrigeration compressors and diesel engines practically demands two reservoir systems, either or both of which may be iced.

(2) At the start of use as heat sinks, either or both of the iced reservoirs can furnish chilled water directly to unit air-conditioner cooling coils until the reservoir temperature rises about 500 F. During that time the refrigeration equipment does not need to be operated and the heat rejected to the reservoir is thus reduced accordingly.

(3) The iced reservoir should not be used as a source of chilled water for the air-conditioning system during normal operating (non-emergency) conditions, because the ice-making equipment producing ice for a reservoir operates at lower temperature and efficiencies than conventional equipment for air-conditioning,

*b.* If the reservoir is filled, or partially filled, with a mixture of water and ice, the water temperature will remain at or near 320 F during the addition of heat until all the ice is melted. During this period of time, and neglecting the heat gains from the rock, the mass $W_1$ in lb of ice, having 144 Btu./lb latent heat of fusion, represents a total heat sink capacity $Q_i$ in Btu as follows

$$Q_i = 144\, w_1 \qquad \text{(eq 5-10)}$$

The heat gains from the rock may be neglected if the iced reservoir has been maintained at 32 "F for sufficiently long periods of time so that the heat transfer from the rock (equation 5-9) tends to zero.

*c.* After the ice has melted, heat will be transferred to the rock, due to the temperature rise of the water. The remaining heat sink capacity of the reservoir will be determined using equation 5-2, based on the water cross section when all the ice has melted. A reservoir filled with ice at one end only maintains an average water temperature of approximately 34 "F in the remaining length of reservoir and serves to provide an additional heat sink capacity due to sensible cooling of the water and surrounding rock below the initial temperature of the rock.

*d.* Ice introduced at one end of a horizontal reservoir floats, packs and jams but does not distribute itself along the length of the reservoir to a sufficient depth; therefore, some mechanical means must be made available for this purpose.

(1) The most satisfactory ice distribution method appears to be a helical-screw conveyor. This horizontal screw conveyor runs the full length of the reservoir above the maximum flotation level of the ice or a distance above the water level somewhat more than one-tenth of the depth of the water. As a result the top of the ice accumulating in any section of the reservoir will only reach the screw conveyor when underlying ice is no longer floating but is resting on the floor of the reservoir.

(2) Ice is dumped from ice making machines at one end of the reservoir. When the ice fed at the dumping point reaches the level of the screw conveyor, it is conveyed and dumped by the helical-screw into the next section, filling it to the bottom. Thus, the process repeats and the full ice front progresses in the direction of the far end.

(3) A simple pendant-level control at the far end of the reservoir that is moved by the ice front will automatically stop operation of the conveyor and ice-making equipment when the reservoir becomes completely filled.

(4) Melting of the ice front by heat transfer from the surrounding rock will allow the pendant-level control to fall to an operating position, causing more ice to be added to the reservoir. For inspection and maintenance of the screw conveyor, a walkway will be placed near the conveyor.

(5) Laboratory experiments have indicated that the best shape of ice for movement in a reservoir is cubical, spherical, or cylindrical, in pieces approximately one inch in size. Ice in crushed or flake form tends to cluster in compacted slushy masses that resist movement. Experiments have shown that the average ice volume in a water-and-ice mixture shaped in a hollow cylinder is from 40 to 50 percent, and it is probable that for non-hollow , small shapes, the ice volume percentage is materially greater.

## 5-4. Solid ice heat sinks.

*a.* When a concept is developed for an ice heat sink configuration, many relevant factors will be considered. The heat sink must be available for use when the button-up signal is given. Economy of space is a major factor in reducing the cost of deep underground excavations in rock.

(1) A block ice heat sink is available for immediate use if continuous water flow paths exist through voids between the ice blocks. However, the voids reduce volumetric utilization, Btu's stored per cubic foot of excavation.

(2) A solid ice cylinder heat sink provides for the maximum utilization of space; however, means must be provided to create an annulus of water between the ice cylinder and the sink wall. The solid cylinder must also be restrained and maintained concentric with the sink walls for proper water flow.

(3) Both types of sinks will have a spray header designed to evenly distribute incoming cooling water over the upper ice surface for uniformity of ice melting.

*b.* To illustrate the space economics of water, water and ice, and solid ice underground heat sinks, a comparison of Btu's that can be absorbed is made on a 100,000-gallon reservoir containing, respectively, water at approximately 8.34 lb/gal and stored at rock ambient temperature of 60 "F, a 50 percent ice/50 percent water sink, and a solid ice cylinder sink maintained at 32 F; all absorbing heat to 1600 F final temperatures, assuming ice at 7.61 lb/gal, 144 Btu/lb latent heat of fusion, and neglecting rock heat transfer.

(1) For water at 60 °F, the total capacity $Q_1$ is in $10^6$ Btu (MBtu)

$$Q_1 = (100{,}000)\ (8.34)\ (100) = 83.4 \text{ MBtu}$$

(2) For solid ice at 32 ° F and 128 ° F rise, the total capacity $Q_2$ is

$$Q_2 = (100{,}000)\ (7.51)\ (128 + 144) = 204 \text{ MBtu}$$

(3) For the 50/50 sink at 32 °F, the total capacity $Q_3$ is

$$Q_3 = (50{,}000)\ [\,(7.51)\ (272) = (8.34)\ (128)\,] = 155 \text{ MBtu}$$

(4) Although the above comparison shows that the heat storage volumetric efficiency of an ambient water sink is approximately one-half that of a 50/50 ice and water sink and approximately two-fifths that of a solid ice sink, other factors such as space and cost for refrigeration equipment, power cost for maintaining the low temperature, and time to re-establish ice sink to design conditions after an engagement will be evaluated when the heat sink configuration is selected.

## 5-5. Sample problems.

This paragraph illustrated by problems the use of equations for heat sinks and discusses the relative merits of the heat-absorbing capacity of the surrounding rock as a function of time and equivalent radius.

*a. Problem 1.*

(1) Assume the heat-rejection rate for an underground installation during an emergency period is 2 MBtuh and that the installation must be self-sustaining for a period of 10 days. The reservoir temperature is initially 520 F and the highest water temperature permissible is 1000 F. Determine the necessary lengths of reservoirs for the cross sections given in table 5-1 with water at 62.42 lb/ft$^3$ density, 1 Btu/lb F specific heat and rock having 1.45 Btuh/ft °F conductivity, 185 lb/ft$^3$ density, 0.2 Btu/lb ° F specific heat, and .0392 ft$^2$/h diffusivity.

(2) For case 1, H = W = 15 ft, and from equation 5-3 through 5-7

$$r_1 = (H + W) / 3.14 = 9.54 \text{ ft}$$

$$t_1 = 10 (24) = 240 \text{ h}$$

$$S_w = 15 (15) = 225 \text{ ft}^2$$

$$X = 2 (3.14) (9.54^2 /225) (185/62.42) (0.2/1) = 1.507$$

$$b = 1.11 - .352\exp (-7.4/1.507) = 1.107$$

$$F_0 = .055 + (.225/1.507) - .025\exp (-7/1.507) = .2041$$

$$F_1 = at_1 /r_1^2 = .0392 (240/9.54^2 ) = .1034$$

$$f(F_1 ,X) = .001 + (0.1) \log [ 1 + (.1034/ .2041)^{1.107} ] = .0178$$

Solving equation 5-2 for $L_1$ with a rise $T_3 - T_2 = 48$ F

$$L_1 = 2 (10^6 /1.45) (.0178/48) = 511 \text{ ft}$$

(3) The water heat pickup Q* is the product of temperature rise, specific heat, and water mass in the reservoir. It is deducted from the total heat rejected $Q_t$ to find the heat pickup of the rock $Q_r$. For case 1, t = 240h, S* = 15$^2$ ft$^2$, $L_1$ = 511 ft, and with coolant heat capacity p*c* = 62.42 Btu/ft$^3$ F and ($T_3 - T_2$) = 48 F rise.

$$Q_t = qt = (240) (2) = 480 \text{ MBtu}$$

$$Q^* = 62.42 (LS^*) (T_3 - T_2 ) = (62.42) (511) (15^2 ) (48) = 344 \text{ MBtu}$$

$$Q_r = Q_t - Q^* = 480 - 344 = 136 \text{ MBtu}$$

$$Q_r /Q_t = 1 - (Q^*/qt) = .282 \text{ or } 28\%$$

(4) The results of similar computation for cases 2 and case 3 are shown in table 5-1 with reservoir lengths computed as follows:

$$L_2 = 2(10^6 /1.45) (.01065/48) = 306 \text{ ft}$$

$$L_3 = 2(10^6 /1.45) (.00733/48) = 211 \text{ ft}$$

(5) Table 5-1 shows that for a reservoir of smaller cross-section and longer length, a greater fraction of the heat is absorbed in the surrounding rock, and this fraction is approximately proportional to

the surface area in contact with the water. Also, the volume of water or amount of excavation is less for the reservoir with the smallest cross-section.

(6) If a reservoir is to be used ultimately as a heat sink for the waste heat from a prime mover such as a diesel engine, the maximum water temperature can probably be higher than 1000 F. For case 2 with other conditions the same but with the maximum allowable water temperature equal to 1600 F instead of 1000 F, the length of the reservoir adjusted proportionally to the temperature differential would be

$$L = 306\,(48/108) = 136\ \text{ft}$$

The volume of reservoir reduces then to 54,400 $ft^3$, but the percentage of the total heat input absorbed by the rock does not vary. The reason is that this percentage is governed by the time available for heat absorption by the rock for a reservoir of a given equivalent radius.

TABLE 5-1

Comparison of 10 Day Capacity Heat Sinks

| Parameter, Symbol | Unit | Case 1 | Case 2 | Case 3 |
|---|---|---|---|---|
| Width of Reservoir, W | ft | 15 | 20 | 20 |
| Height of Reservoir, H | ft | 15 | 20 | 30 |
| Equivalent Radius, r | ft | 9.54 | 12.73 | 15.91 |
| Operating Time, t | h | 240 | 240 | 240 |
| Cross-section, $S^*$ | $ft^2$ | 225 | 400 | 600 |
| Equation 5-6, X | -- | 1.507 | 1.509 | 1.572 |
| Equation 5-5, b | -- | 1.107 | 1.107 | 1.107 |
| Equation 5-4, $F_0$ | -- | .2041 | .2038 | .1978 |
| Fourier Number, $F_1$ | -- | .1034 | .0581 | .0371 |
| Resistance Factor, $f(F_1,X)$ | -- | .0178 | .0106 | .0073 |
| Length of Reservoir, L | ft | 511 | 306 | 211 |
| Total Heat Rejected, $Q_t$ | MMBtu | 480 | 480 | 480 |
| Water Heat Pickup, $Q_w$ | MMBtu | 344 | 367 | 379 |
| Rock Heat Pickup, $Q_r$ | MMBtu | 136 | 113 | 101 |
| Ratio $Q_r/Q_t$ | -- | .282 | .236 | .210 |
| Sidewalls, A | $ft^2$ | 30,660 | 24,480 | 21,100 |
| Water Volume, V | $ft^3$ | 115,000 | 122,000 | 126,000 |

*b. Problem 2.*

(1) To illustrate the influence of the available time, recompute case 2 of problem 1 for 6, 8, 10, 12, and 14 days of operation. The result of the computations is shown in table 5-2 for $X = 1.509$, $S^* = 400\ ft^2$, $r_1 = 12.73$ ft, $q_1 = 2{,}000{,}000$ Btuh, $K = 1.45$ Btuh/ft °F, $a = .0392\ ft^2\ h$, and 48 °F temperature rise, or from equation 5-3 and 5-4

$$F_0 = .055 + (.225/1.509) - .025\exp(-7/1.509) = .2038$$

$$F_1 = at/r_1^2 = .0392(t/12.73^2) = t/4134$$

$$f(F_1, X) = .001 + (0.1)\log[1 + F_1/F_0)^{1.107}]$$

$$= .001 + (0.1)\log[1 + (t/842)]^{1.107}]$$

From equation 5-2 solved for L

$$L = (q_1/48\ k)[f(F_1, X)]$$

$$= (2/48)(10^6/1.45)(.001 = (0.1)\log[1 + (t/842)^{1.107}])$$

$$= 28.7 + 2874\log[1 + (t/842)^{1.107}]$$

From $Q^* = 62.42\ (LS^*)(T_3 - T_2)$, $Q_t = q_1\ t$, and $Q_r = Q_t - Q^*$

$$Q_r/Q_t = 1 - (48/10^6)(62.42/2)(400\ L/t) = 1 - .6(L/t)$$

(2) It has been noted that the percentages of total heat absorbed by rock in table 5-2 increase as the duration of heat input increases. This shows the influence of time when the reservoir size is adjusted to yield the same temperature rise for different durations of heat input.

TABLE 5-2

Reservoirs length versus time at fixed 400 $ft^2$ section

| Symbol | Units | Case 1 | Case 2 | Case 3 | Case 4 | Case 5 |
|---|---|---|---|---|---|---|
| | days | 5 | 8 | 10 | 12 | 14 |
| t | hours | 144 | 192 | 240 | 288 | 336 |
| $F_1$ | - | .0348 | .0464 | .0581 | .0697 | .0813 |
| $f(F_1,X)$ | - | .0067 | .0087 | .0106 | .0126 | .0144 |
| L | ft | 194 | 251 | 306 | 361 | 414 |
| V | $ft^3$ | 77,600 | 100,400 | 122,400 | 144,400 | 165,600 |
| $Q_t$ | MMBtu | 288.0 | 384.0 | 480.0 | 576.0 | 672.0 |
| $Q_w$ | MMBtu | 232.4 | 300.7 | 366.6 | 432.5 | 496.0 |
| $Q_r$ | MMBtu | 55.6 | 83.3 | 113.4 | 143.5 | 176.0 |
| $Q_r/Q_t$ | | .193 | .217 | .236 | .249 | .262 |

c. *Problem 3.*

(1) To illustrate the advantages of reducing the heat rejection rate to the minimum, use the 194-foot reservoir of problem 2 at half the heat rejection rate or 1 MBtuh. Determine for the same temperature rise of 48 °F the operating time, the total heat capacity, and the fraction of heat absorbed by the rock.

(2) Solving equation 5-2 for time gives with $s = (T_3 - T_2)(q_1)^{-1}$

$$t = (r^2/a)(F_0)(-1 + \exp[10kLs - .01)\ln 10])^{1/b} \qquad \text{(eq 5-11)}$$

(3) For this problem $s = 48/10^6$ °F/Btuh, $F_0 = .2038$, $L = 194$ ft, $k = 1.45$ Btuh/ft °F, $r = 12.73$ ft, $b = 1.107$, $a = .0392$ ft$^2$/h, and the operating time based on equation 5-11 is

$$t = (842.5)(-1 + \exp[(.135 - .01)2.3])^{.903} = 313\text{ h}$$

(4) As a result, the total heat rejection is 313 MBtu, and the heat absorbed by the water is 232.4 MBtu. This gives a balance for the rock heat pickup of 80.6 MBtu or 25.8 percent of the total. Hence, reducing the heat rejection rate increased the total heat capacity by 8.6 percent, the rock heat pickup by 45 percent, and the available time by 116 percent.

*d. Problem 4.*

(1) Using the parameters of problem 1 and case 2, compute the refrigeration capacity required to cool down this reservoir from 52 °F to 40 ° F in 25 days, and determine the refrigeration necessary after 60, 240, 365, and 1,095 days of holding the water at 40 °F.

(2) For the cool down, $X = 1{,}509$, $F_0 = .2038$, $a = .0392$ ft$^2$/h, and $b = 1.107$ remain unchanged. But $F_3$ must be computed for 25 days or 600 h instead of the 10 days of problem 1, so that based on $r_1 = 12.73$ and $L = 306$ ft from Table 5-1,

$$F_3 = .0392(600/12.73^2) = .145$$

From equations 5-3 and $F_3$ substituted to F,

$$f(F_3, X) = .001 + (0.1)\log[1 + (.145/.2038)^{1.107}] = .0237$$

From equation 5-8 and a drop of 52-40 = 12 °F

$$q_2 = (1.45/.0237)(306)(12) = 224{,}660 \text{ Btuh}$$

At 12,000 Btuh per ton of refrigeration, this represents a demand of 18.72 tons.

(3) For the successive holding times with the reservoir kept at 40 °F, equation 5-9 is applied. For instance, after 60 days or 1,440 h

$$F4 = .0392(1440/12.73^2) = .348$$

$$q_3 = 1.45(306)(400/.348)^{.31}(12) = 47{,}317 \text{ Btuh or } 3.94 \text{ tons}$$

(4) For holding times $t_i$ in days, different from 60 days, the corresponding Fourier number $F_i$ is by definition or proportional to time and, compared to $F_4$ above, $F_i = F_4(t_i/60)$. Compared to $q_3$ above the holding load $q_i$ is then based on equation 5-9, approximately proportional to the reciprocal of the cube root of $t_i$ as shown below

$$\begin{aligned} q_i &= q_3(F_4/F_i)^{.31} \\ &= (3.94)(60/t_i)^{.31} \\ &= 14/t_i^{.31} \text{ tons} \\ &= 2.55 \text{ tons for } t = 240 \text{ days (4 months)} \\ &= 2.25 \text{ tons for } t = 365 \text{ days (one year)} \\ &= 1.60 \text{ tons for } t = 1{,}095 \text{ days (3 years)} \end{aligned}$$

*e. Problem 5.*

(1) This problem illustrates the case of the reservoir of problem 4, but in this case it contains 40 percent ice by volume. Below 50 °F water from the reservoir is used as chilled water in the system. From 50 °F to 100 °F this water is used as condenser water for the refrigeration equipment. The heat rejected to the sink is 2 MBtuh with the refrigeration equipment operating, 20 percent of which corresponds to the energy input required to drive this equipment. The heat rejection is 1.6 MBtuh as long as the sink temperature does not exceed the 50 °F temperature level. Determine how long the iced reservoir can be utilized under these conditions.

(2) For an ice density of 57.5 lb/ft$^3$ the ice melting latent heat capacity is

$$Q_i = 20\,(20)\,(306)\,(0.4)\,(57.5)\,(144) = 405.4 \text{ MBtuh}$$

At 1.6 mmBtuh heat input rate the time $t_i$ it takes to melt the ice is

$$ti = 405.4/1.6 = 250 \text{ h}$$

(3) The ice density is only 92 percent that of water. After all the ice is melted the volume filled by water in the reservoir will increase by 0.92 (.40) or 36.9 percent or a total of 96.9 percent. The water cross-section is then 400(.969) = 387.5ft$^2$ and X adjusted for less than full is

$$X = 1.507\,(400/387.5) = 1.556$$

(4) Then $F_0$ = .1993 from equation 5-4 and b = 1.107 (equation 5-5) for 32 °F to 50 °F or 18 °F rise, q = 1.6 MBtuh, k = 1.45 Btuh/ft °F, L = 306 ft, r and a are unchanged, s = $(T_3 - T_2)q^{-1}$ = 11.25/10$^6$, and the operating time calculated using equation 5-11 with (10kLs - 0.01) = .0399 and $F_0 r^2/a$ = 823.9 is

$$t_1 = 823.9\,[-1 + \exp(.0399 \ln 10)]^{.903} = 99 \text{ h}$$

(5) From 50 °F to 100 °F the rise is 50 °F, q = 2 MBtuh, and s = (50/2) 10$^{-6}$. With (10kLs - .01) = .1009 and by equation 5-11 the operating time is then

$$t_2 = (823.9)\,[-1 \exp(.1009 \ln 10)]^{.903} = 245 \text{ h}$$

(6) Wasting the [ (62.4) (387.5) (306) ] lb of 100 °F water in the reservoir at 110 °F discharge temperature, or a 10 °F rise at q = 2 MBtuh extends the operating time (equation 5-1) by

$$t_3 = (62.4)\,(387.5)\,(306/2)\,(10/10^6) = 37 \text{ h}$$

(7) The total utilization time is then

$$t = 250 + 99 + 245 + 37 = 631 \text{ h}$$

(8) For the same reservoir but full of water $F_0$ = .2038 instead of .1993, S* = 400 ft$^2$ instead of 387.5ft$^2$, and from 32 °F to 50 °F the operating time is by comparison with (4) above

$$t_1 = 99(2038/1993) = 101 \text{ h}$$

Similarly, from 50 °F to 100 °F and by comparison with (5) above

$$t_2 = 245(2038/1993 = 251 \text{ h}$$

and above 100 °F by comparison with (6) above

$$t_3 = 37(400/387.5) = 38 \text{ h}$$

(9) The total utilization time is then t = 251 + 38 = 289 h if initially at 50 “F and 289 + 101 = 390 h if initially at 32 “F. This shows that the operating time of a 40/60 iced reservoir is increased by 342 h and increased by 241 h or 62 percent when compared to a water reservoir initially at a temperature of 32 “F that has no ice.

## 5-6. Cooling towers.

*a. General*

(1) The cooling tower circulating water systems for hardened facilities will generally be of a closed-loop design utilizing cooling towers, storage tanks, basins, pumps, filters, heat exchangers? and water treatment facilities. The tower construction, heat sink storage tank size, and system configuration will be determined by the facility tactical operating scenario.

(2) Figure 5-1 depicts a hardened facility cooling water system with both hardened and unhardened towers. Air for cooling towers located within areas protected by blast doors and blast valves will be separate from air used in primary protected areas. The towers will be separate from air used in primary protected areas. The towers will be surface mounted or protected below grade to escape the blast wave. The towers will have sufficient elevations above the settling basin to permit gravity flow of cooling water from the tower to the hardened basin.

(3) During normal operations, circulating water will be delivered from the cooling towers to the settling basin and pumped through the various heat exchangers in the facility.

(4) During the attack period, cooling tower fans will be shut down. Valving will be arranged to provide cooling water on a recirculation basis from the hardened heat sink storage tank with return back to the heat sink storage tank. This will provide cooling water that is independent of the cooling towers to meet attack mode heat rejection requirements.

(5) Prior to cooling tower startup following the attack period, towers and drain piping will be flushed with water from the heat sink storage tank to remove major quantities of dust and dirt to prevent plugging the system. All flushing water will flow into the dust disposal basin where it will be pumped by sand pumps to a disposal area outside the power plant. The water discharged from the disposal basin will be monitored by density meters. When the density reaches a predetermined level, the cooling towers will be returned to service.

(6) The cooling tower circulating water discharge will then be diverted through 2 micron polishing filters to remove excess dust and prevent fouling the heat exchangers. The dust removed by the filters will be backwashes to the disposal basin and will be discharged by sand pumps to the disposal area.

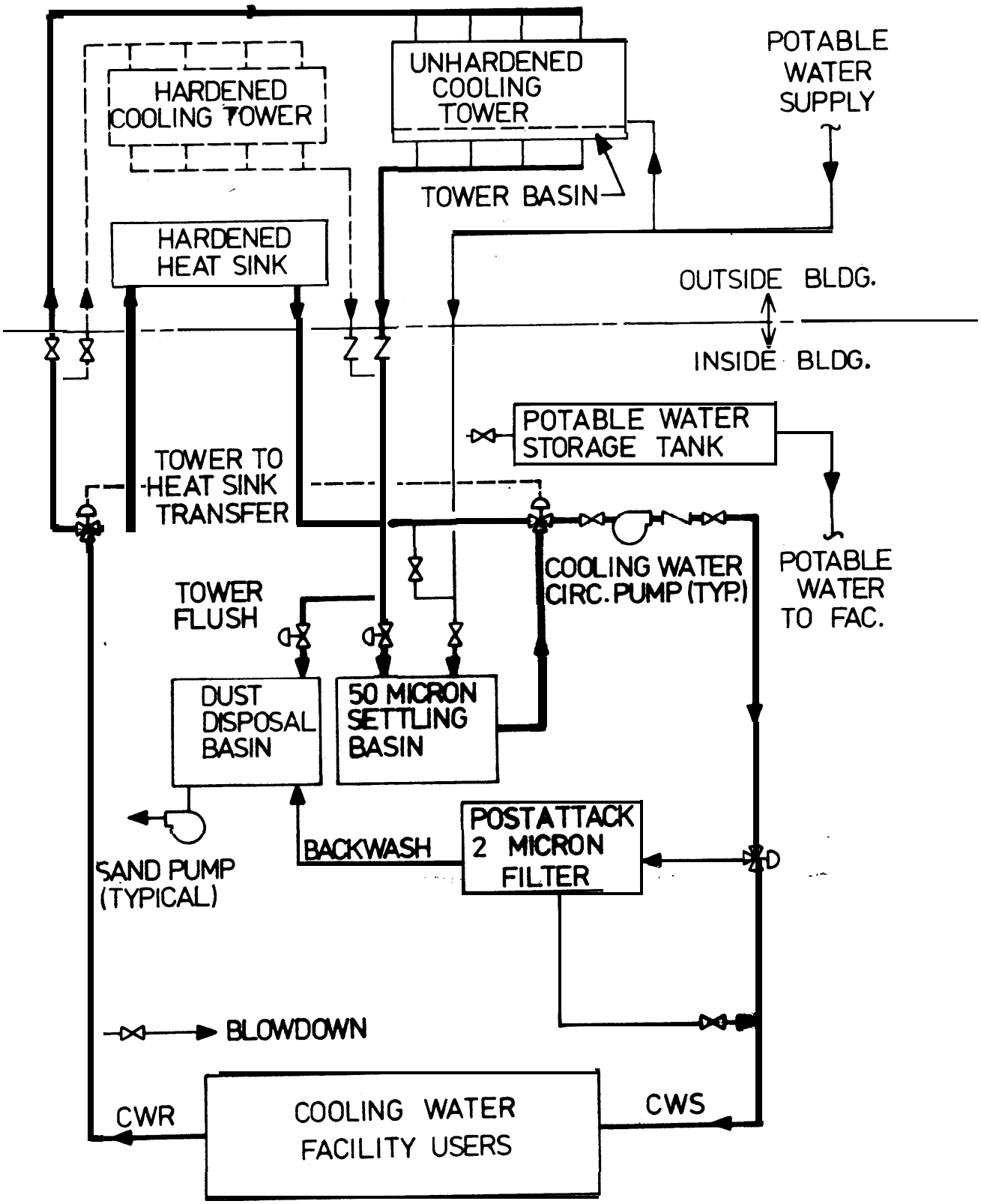


U.S. ARMY CORPS OF ENGINEERS

*Figure 5-1. Typical hardened cooling water system.*

*b. Cooling towers.*

(1) Cooling towers till be of the counterflow or crossflow, spray-filled type, desired to withstand the effects of an attack. Towers will generally be cylindrical and constructed of reinforced concrete to resist severe shock loading on the aboveground tower structure, including all internals of the tower, and fan overspeeding due to weapon effects such as the blast wave. Towers exposed to direct thermal radiation will have critical parts of the system shielded from this effect.

(2) Sufficient water will be stored in heat sink storage tanks to provide for cooling tower makeup for the entire post-attack period, to provide water to flush dust from combustion air dust collectors, and to provide cooling while towers are shut down.

(3) Consideration will be given to using hardened wells, rather than hardened storage tanks, to provide for cooling tower makeup and domestic water requirements for the entire post-attack period. Wells will be used if aquifers with adequate flow capacity are available. Wells must remain a dependable source of water under all weapons effects. Where possible, two or more aquifers with flow from different directions, and separated as much as practicable will be tapped to preclude complete loss of water if one aquifer is damaged during attack. Makeup water used during normal operation will be from domestic supply or wells located on the site.

(4) Where cooling towers are required to operate in extreme winter conditions, provisions will be made to prevent freezing and ice buildup on the tower. Hardened facilities will generally have an indoor collection basin as part of the heat sink/cooling tower configuration. Additional freeze protection features, such as thermostatic cycling of the cooling tower fans controlled by leaving water temperature and reversal of the fans' direction to melt ice buildup on the tower fill, will be evaluated and incorporated into the design where necessary.

(5) Cooling towers will have fire protection system designed in accordance with NFPA 214.

c. *Basins.* Hardened concrete basins include the tower basin, settling basin, and disposal basin.

(1) The tower basin will be sized and have a flow pattern such that dirt, dust, and fallout will not settle within it during flushing of the spray towers. Flushing valves will be installed between the tower basin and the settling and disposal basins. Valves will be positive shutoff type, capable of being automatically positioned to divert water flow to the disposal basin. Valves will be constructed of materials that will not corrode or foul from the dust and dirt of a weapons blast.

(2) The settling basin will have sufficient storage capacity above the minimum suction level of the circulating pumps to provide system flow requirements for a minimum of five minutes. The basin will be of a size, design, and flow pattern to permit settlement of all dust and dirt particles having a specific gravity of 2.5 and having a size of 50 microns or larger.

(3) The disposal basin will have sufficient capacity to permit intermittent operation of the sand pumps.

*d. Pumps.*

(1) All pumps installed in the cooling tower circulating water system will be inherently capable of withstanding ground shock or will be dynamically mounted to reduce the shock to an acceptable level. Where possible, commercial pumps will be used if they have demonstrated resistance to the required input shock spectra. Pumps that are dynamically mounted for shock isolation will have expansion joints capable of accepting the full differential movement.

(2) Particular attention will be given to design of the pump frame, mountings, base-plates, and casings and to hold-down bolts and their proper torque specifications. Barrels of vertical pumps will be as short as possible. The use of vertical-frame pumps with excessive cantilevering in frame design will be avoided.

e. Cooling water filters. Filters used for post-attack and post-blast removal of dust and fallout from cooling tower water will be capable of removing all particulate matter larger than 2 microns and will be suitable for operation with chemically treated cooling water. Filter assemblies will be constructed of steel; cast-iron will not be used.

## 5-7. Radiators.

*a.* A finned-coil heat exchanger (radiator or air cooled condenser) exposed directly to the ambient air may be used above-ground or in a buried chamber to dissipate heat generated by prime movers, chillers, etc., in underground facilities.

(1) An underground radiator or air cooled condenser that utilizes auxiliary fans to draw (or force) cooling air from the outside through the coil and exhaust the rejected heat to the outside offers a greater degree of protection against the elements (dust or sandstorms) and weapon effects but requires more fan

horse-power for air movement. Blast closure devices, debris shields, and dirt traps in the supply and exhaust ducts will increase the level of protection.

(2) Underground radiator vaults will have provisions to wash down the radiators and pump out material deposited on the coil surfaces. The material poses no contamination problem for the cooling liquid but does reduce thermal efficiency of the radiator coils.

(3) An average air velocity of 1,500 fpm through the core, as measured by an anemometer in front of the core, is recommended. This air velocity causes a slight hum or noise, but the noise is not objectionable.

*b. The* fan will be operated at the speed necessary to obtain the recommended 1,500 fpm air velocity but will never be operated at more than 12,500 fpm speed when using a centrifugal type.

(1) For larger fan sizes the fan speed will fall below 1,150 rpm, the lowest recommended speed for directly connecting the fan to the motor. Fan speeds below 1,150 rpm will require provisions for reducing the electric motor shaft speed to the desired fan speed. For small installations using centrifugal type fans, the fan will be directly connected to the motor. Specifically designed propeller-type fans will be operated at higher speeds and direct-connected to electric motors running at 1,750 or 1,150 rpm.

(2) A centrifugal fan operating at a peripheral speed of 10,000 fpm is a source of noise. Sound pressure levels will not exceed 85 dBA in occupied areas. If they do, the noise will be reduced by lowering the fan speed, isolating the fan, or using inlet and outlet silencers. An average air velocity of 1,500 fpm can be obtained using relatively large fans running at lower than 10,000 peripheral fpm. A large fan running at a low speed is more practical than a small fan running at a high speed.

(3) Propeller-type fans require less power than centrifugal types. For best results they will be used as a blower-type fan and will be located from 6 inches to 10 inches in back of the core and have a shroud. Their cost, including installation, is generally greater.

(4) Forced draft produces more turbulence than induced draft, thus increasing the heat transfer rate. Induced draft provides more uniform airflow and less turbulence, handles hot air, and requires from 1 to 8 percent more fan horsepower.

(5) Values for the average power required to drive engine radiator fans are given below as a percent of the engine hp. These values are considered reasonable but may vary with coolant temperatures and ambient air temperature.

| *Engine HP* | *Percent Engine HP* |
|---|---|
| 100 or less | 5.0 |
| 100 to 500 | 4.0 |
| 500 to 1,000 | 3.0 |
| 1,000 to 1,500 | 2.0 |
| 1,500 to 2,000 | 1.5 |
| 2,000 to 3,000 | 1.3 |
| 3,000 or more | 1.0 |

(6) Two-speed motor drives are frequently used to save fan power when the maximum cooling effect is not required, because power requirements decrease faster than the degree of cooling. At half-speed, fans will produce 50 percent or more of total cooling capacity but will require only 20 percent of the power needed for full-speed operation. Control of airflow is another method of modulating the cooling affect. Use of two-speed motors is preferable if the heat dissipation requirements frequently vary.

# CHAPTER 6

# DECONTAMINATION FACILITIES

## 6-1. General.

*a.* Decontamination facilities are required for the safe entry of personnel into a hardened structure from a contaminated area. Decontamination facilities will be provided in communications and control centers, command posts, or other hardened structures in which a mission must be accomplished throughout an enemy attack or where the prolonged operations of such facilities are dependent upon the availability of outside utilities.

*b.* Decontamination facilities may be omitted or reduced to a minimum size in hardened structures that are primarily shelters in which no specific mission is accomplished and no need exists for the movement of personnel between the outside and inside of the structure during a contaminating event.

*c.* Decontamination facilities covered in this manual are limited to the corridor type suitable to process those few people who may be required to make outside surveys or repairs. The required decontamination capacity will be determined by the facility system engineering.

*d.* In structures where uninterrupted operations must be maintained and personnel are placed on a shift basis for "around-the-clock" duty, provisions will be made for the emergency housing and messing of all required personnel within that structure. This eliminates the need for large decontamination facilities and the requirement for additional protected structures for housing and messing. It also simplifies the problem of transporting personnel through the contaminated areas between various buildings.

*e.* In the exceptional case when a large number of people must be transported through or from contaminated areas to hardened installations, collapsible self-storing decontamination facilities designed by CRDC to process up to 320 persons per hour may be obtained from AMCCOM.

## 6-2. Entrances.

*a.* Entrances that do not incorporate decontamination. facilities (covered in TM 5-858-5) are provided with an airtight door behind a pair of blastproof exterior doors resulting in two contiguous chambers; a blast lock and a vestibule.

(1) The blast lock between the blast doors allows opening of one blast door at a time. This permits ingress and egress without loss of interior air pressure, interruption of the blast protection, or direct entry of air into the facility.

(2) Mounted above the exterior blast door is a blast closure and above the inner blast door an antibackdraft valve. These fittings are connected in series by a blast proof ceiling cavity above the blast lock. This allows continuous exhaust of air from the vestibule under a controlled pressure differential independently from the use of the blast lock.

(3) The vestibule between the blast door and the airtight door is a pressurized and ventilated air lock which allows for dilution and exhaust of any outside air introduced in the vestibule by the movement of personnel through the inner blast door.

(4) Mounted above the airtight door separating the vestibule from the rest of the facility is an air pressure regulator to supply no less than 300 cfm of scavenging air to the vestibule under a controlled pressure differential.

*b.* The addition of decontamination facilities accessible from the vestibule of such entrances, as shown" in figure 6-1, will extend their use to contaminating events. Scavenging air is supplied through the permeable shower doors. As a result the air pressure regulator above the airtight door to the vestibule is eliminated. During contaminating events the vestibule will become contaminated as soon as entries are made, but further contamination of the installation is prevented if the contaminated personnel are diverted through the decontamination facility instead of proceeding through the airtight door used under normal conditions. This will eliminate the everyday use of the decontamination facilities and the requirement of a dedicated entrance.

*c*. Doors will be provided with locks controlled from inside to prevent inadvertent opening from the contaminated side. Airtight doors that will be used for normal egress and ingress will be Provided with butyl rubber seals fitted in nonferrous metal strips that are readily adjustable and replaceable with the door closed. Doors will swing into the higher pressure area to ensure better sealing. Mechanical closing of pedestrian doors is not recommended. Mechanical operation will be limited to doors of excessive size and weight, and mechanical controls will be located at the door. Remote audible and visual devices indicating the position of doors will be used on all doors if necessary. Blastproof doors are covered in TM 5-858-5.

*d*. *The* M2 permeable membrane door (NSN 4240-00-891-4276) Shown in figure 6-2 is obtained from AMCCOM for use in decontamination facilities. The membrane consists of two vertical panels or flaps of permeable elastic material stretched on a tubular hoop-frame assembly fitting the door frame. In the center the flaps overlap but because of their elasticity can be momentarily separated by entering personnel without much turbulence and without appreciable loss of interior pressure. At rest the permeable panels will permit an airflow of 400 cfm at a pressure differential 0.1 in. wg as tested by AMCCOM. See figures 6-1, 5-3, and 6-4 for M2 door location at inlet and exit of shower area.

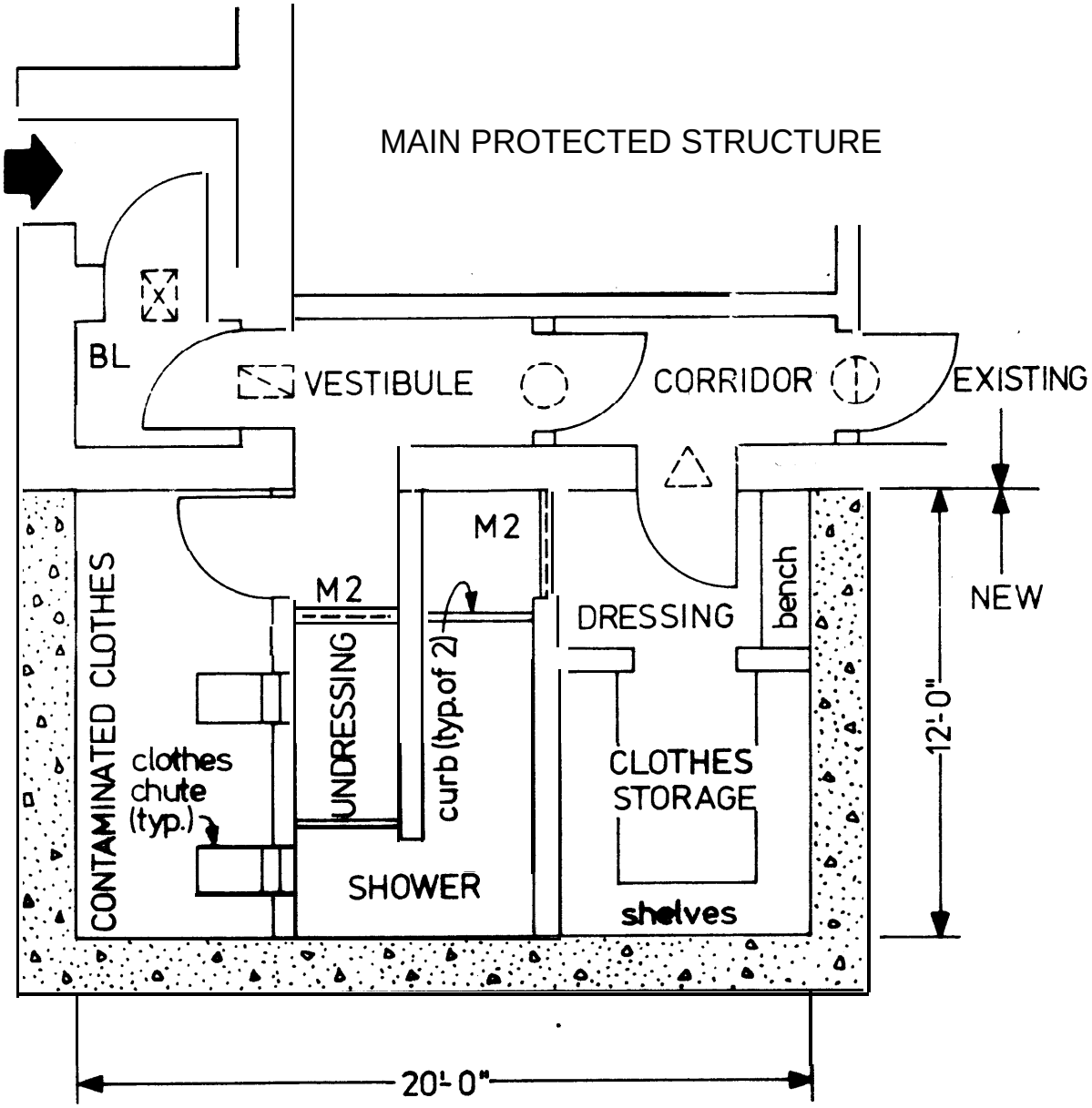


BL = BLAST LOCK WITH BLAST PROOF CEILING PLENUM

M2 = PERMEABLE MEMBRANE DOORS (FIG. 6-2)

= BLAST DOOR WITH BLAST VALVE OVERHEAD

= BLAST DOOR WITH ANTI BACK-DRAFT VALVE OVERHEAD

= AIRTIGHT DOOR (AIR PRESSURE REGULATOR REMOVED)

= AIRTIGHT DOOR WITH AIR PRESSURE REGULATOR OVERHEAD

= LOUVERED DOOR

U.S. ARMY CORPS OF ENGINEERS

*Figure 6-1. Corridor type decontamination facility retrofit.*

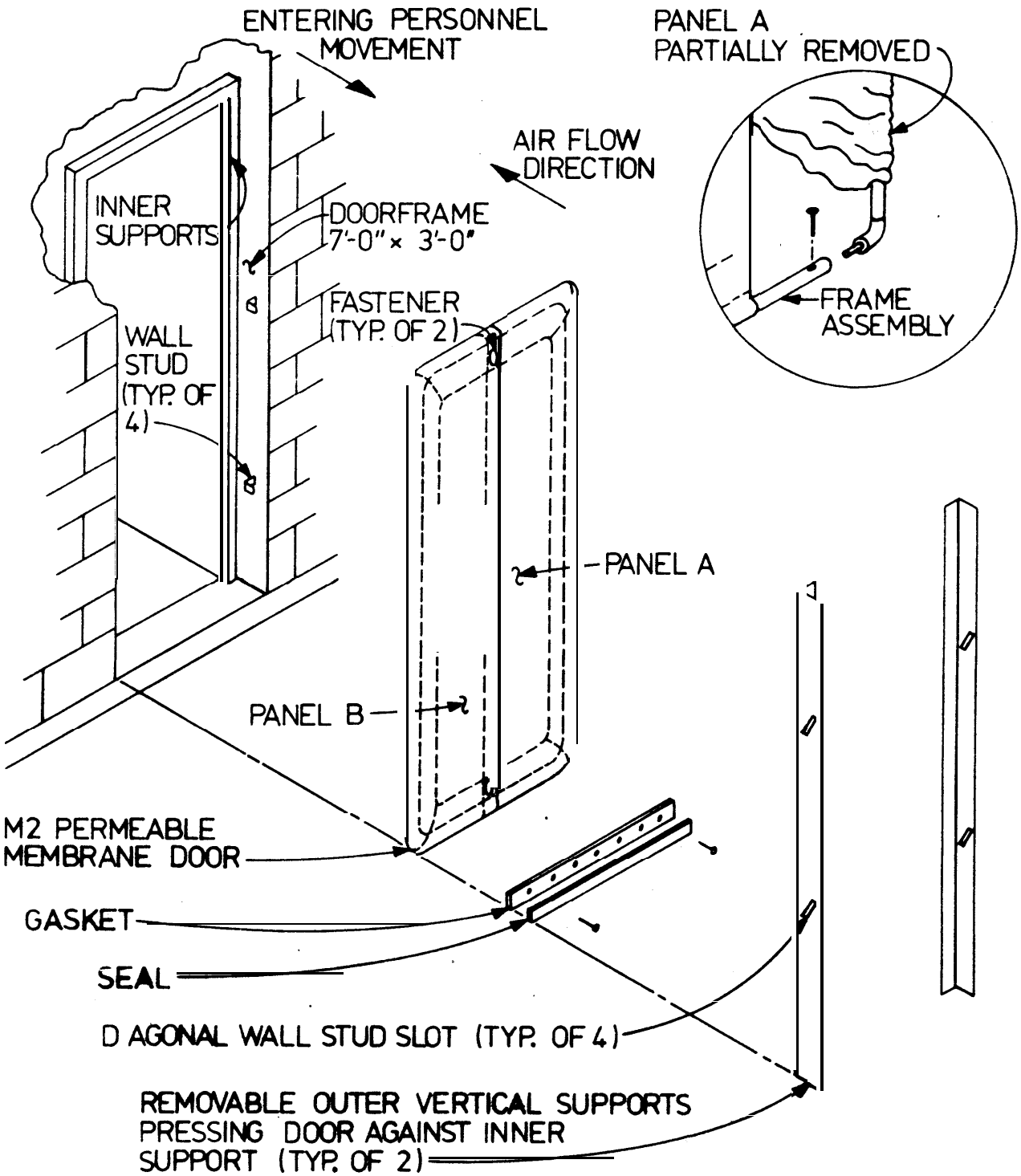


U.S. ARMY CORPS OF ENGINEERS

*Figure 6-2. M2 permeable membrane door.*

## 6-3. Decontamination.

*a. Procedure.* Personnel subjected to contamination must enter a protective structure through a blast lock and a series of chambers having a continuous outward flow of scavenging air including vestibule, space for undressing and disposal of contaminated clothing, facilities for showering, and space for dressing with clean clothing kept in storage.

(1) Upon entering the undressing area persons remove all protective garments and clothing with the exception of the gas mask. All such clothing is disposed of through specially designed chutes into a separate isolated room.

(2) The person then proceeds to the shower area where he removes and disposes of his gas mask after obtaining a thorough rinsing. The mask is disposed of through a second chute located in the shower area. After washing with soap and water, he proceeds to a dressing area where he obtains towel and wearing apparel.

*b. Duration.* The established time for showering is 3 minutes, which means that a person can obtain safe decontamination of biological contaminants in approximately 9 minutes if an assumption is made that undressing and redressing can each be accomplished in 3 minutes. The time for undressing and redressing will depend upon the amount of clothing worn and issued as well as personal toiletry. It is only the biological contaminants that cannot be immediately detected that necessitate a fixed time and procedure for safe decontamination and entry.

*c. System configuration.* The physical size of the decontamination facilities and the requirement for duplication will be dependent 'upon the type of structure, the mission to be accomplished, and the number of persons that may utilize the facilities during any one period.

(1) It may be necessary in certain hardened structures to provide duplicate decontamination facilities to accommodate both male and female occupants, as shown in figure 6-3. However, this should be the exception and not the rule when considering such facilities.

(2) Tests have established the size of the undressing and shower areas as they relate to air quantities for scavenging and personnel activities. Therefore, no change in cross-sectional dimensions of the undressing and shower areas or air quantities will be made without first consulting AMCCOM, Attn: SMCCR-PPP. The standard corridor type decontamination facility is 3 feet wide and 7 feet high with scavenging air at 20 fpm or 400 cfm total air flow.

(3) Each person requires 9 square feet for undressing and 9 square feet for showering, thus determining the length of these areas as a function of capacity. For instance, the entry of three persons every 9 minutes will require an undressing area 3 feet wide by 9 feet long (exclusive of door space and shower curbs) and shower area of the same size. When this entry system is operated on a continuous basis, 18 persons per hour can enter the protected area of a structure. Such an entry system is illustrated in figure 6-4.

(4) Each shower position will be provided with one shower head installed directly overhead. Each shower head will have a flow rate of 3 to 5 gallons per minute at design pressure. Water temperatures, need not exceed 95 °F, and total water storage can be figured on the basis of 3-hour operation a day for a period of 12 days.

(5) For dressing rooms air scavenging is not essential, and floor areas of 12 square feet per person will be used as a basis for design. Where possible dressing rooms will be incorporated in the toilet facilities of the structure by providing for the shelf storage of clothing and towels in the toilet area. See figure 6-4.

(6) Shelf space for the storage of towels and clothing will be provided in the dressing area for self-servicing or in a separate room serviced by issuing personnel. Such a separate room may have both male and female apparel and be arranged so that it may service duplicate entry systems as shown in figure 6-3. Shelf space may be determined on the basis of one square foot per person with vertical spacing of 10 inches between shelves.

(7) The contaminated clothing chute designed by AMCCOM is shown in figure 6-5. Clothing is pushed through a vertically hung flap door and placed on a horizontal flap door that prevents exposure of personnel to the outdoors or to previously discarded clothing. The horizontal flap door drops the clothing to the *floor* or into a container after the vertical door closes. The clothes chutes must be placed inside the protected area in a room provided for the collection of contaminated clothing.

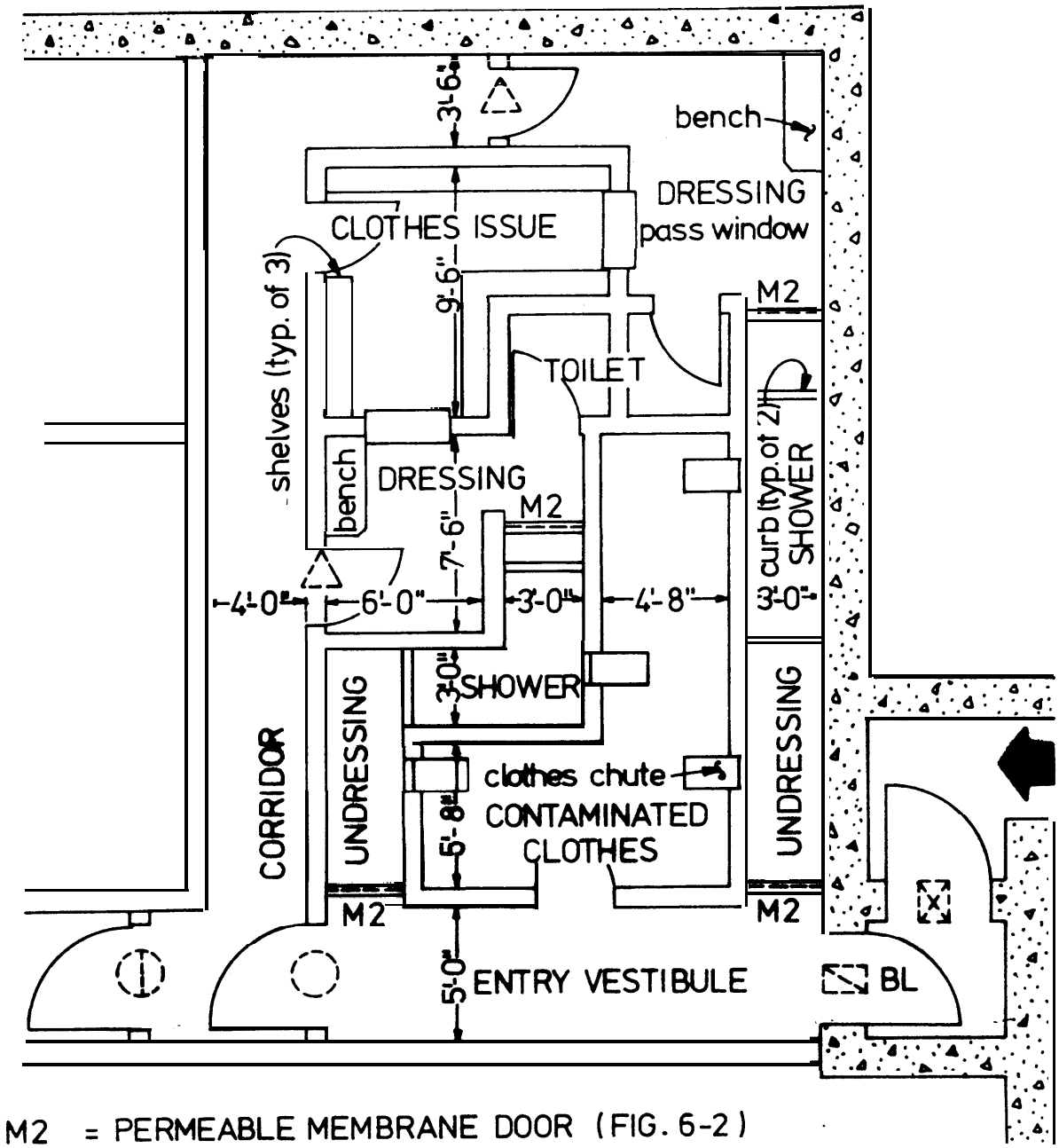


M2 = PERMEABLE MEMBRANE DOOR (FIG. 6-2)

= BLAST DOOR WITH BLAST VALVE OVERHEAD

= BLAST DOOR WITH ANTIBACK-DRAFT VALVE OVERHEAD

BL = BLAST LOCK WITH BLAST PROOF CEILING PLENUM

= AIRTIGHT DOOR WITH AIR PRESSURE REGULATOR OVERHEAD

= AIRTIGHT DOOR

= LOUVERED DOOR

U.S. ARMY CORPS OF ENGINEERS

*Figure 6-3. Dual decontamination facility.*

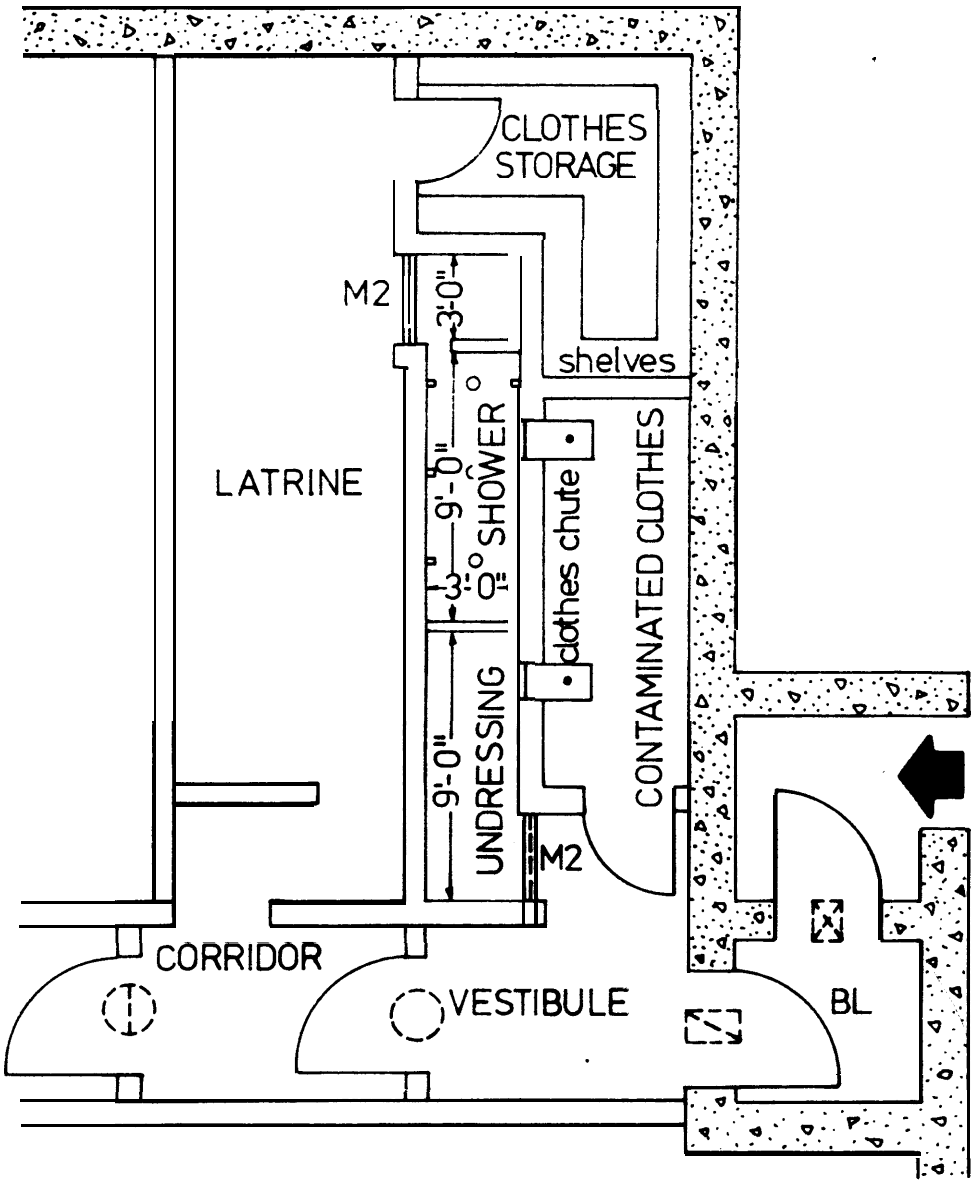


BL = BLAST LOCK WITH BLAST PROOF CEILING PLENUM

M2 = PERMEABLE MEMBRANE DOOR (FIG. 6-2)

= BLAST DOOR WITH BLAST VALVE OVERHEAD

= BLAST DOOR WITH ANTIBACK-DRAFT VALVE OVERHEAD

AIRTIGHT DOOR WITH AIR PRESSURE REGULATOR OVERHEAD

AIRTIGHT DOOR

U.S. ARMY CORPS OF ENGINEERS

*Figure 6-4. Decontamination facility sized for 18 people per hour.*

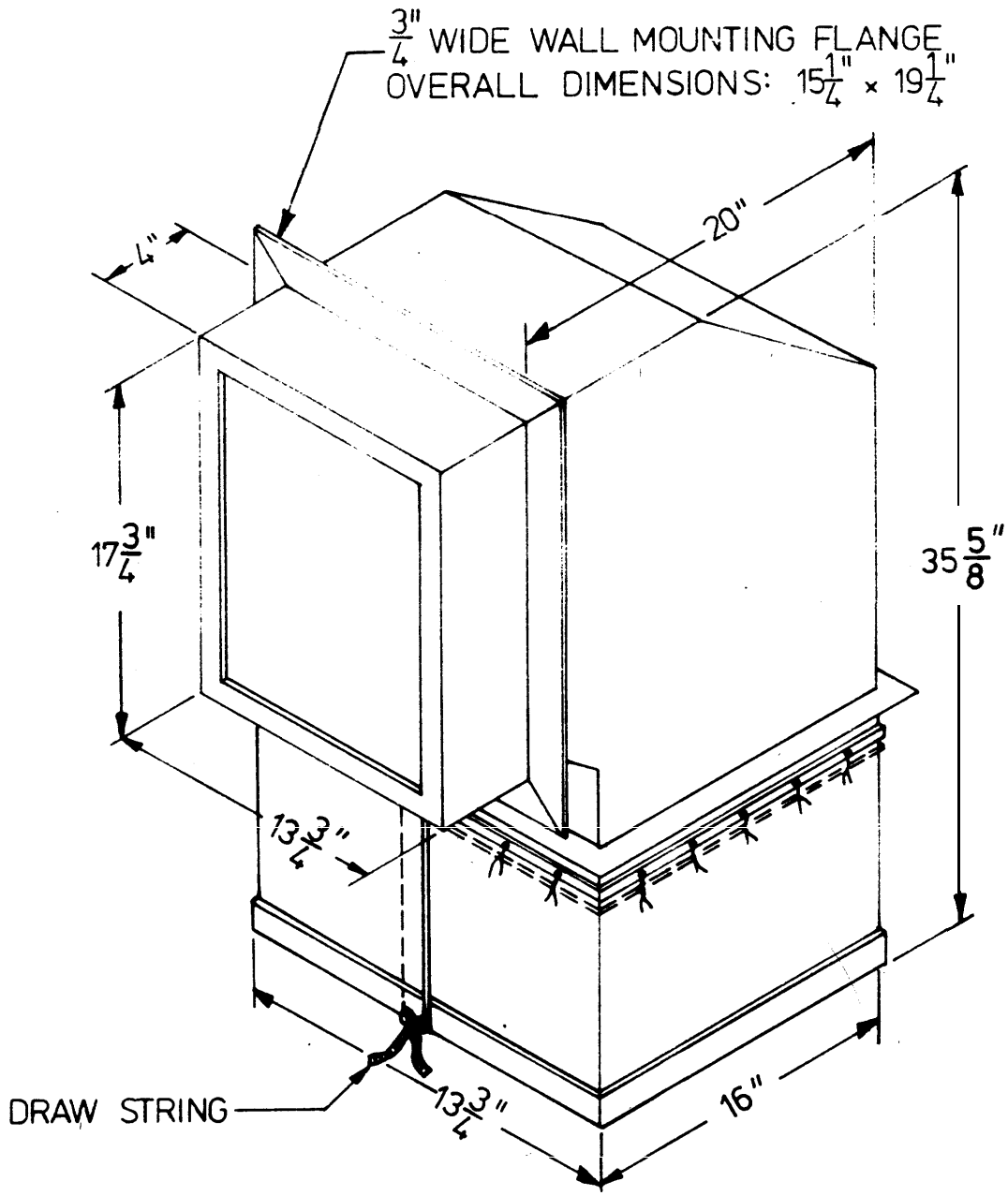


INTERNAL VERTICAL AND HORIZONTAL DOORS NOT SHOWN

USE MASONRY WALL OPENING 18 1/4" x 14 1/4"

U.S. ARMY CORPS OF ENGINEERS

*Figure 6-5. Contaminated clothes chute.*

## 6-4. Ventilation.

*a*. To prevent contaminated air infiltration and to obtain scavenging airflow through the decontamination area, the hardened structure will be pressurized at all times. A vestibule pressure of 0.3 in. wg behind the blast lock will provide adequate protection against infiltration with winds of 25 mph (eq 2-16). The pressure drop through the corridor type decontamination facilities is that of the two M2 doors in series or 0.2 in. wg at 400 cfm scavenging air flow. The total pressure is then 0.5 in. wg in the remainder of the structure.

*b*. Blast locks and vestibules, discussed in paragraph 6-2, each have a minimum area of the square feet and are provided with blast doors that are not gastight. Depending on the leakage rate of these doors, the blast lock is ventilated at some pressure intermediate between that of the vestibule and the outside. The blast plenum above the blast lock acts as a surge volume to attenuate the overpressure transmitted inwards during the time it takes for the blast valve to seat, thereby reducing the impact of these blow-by effects to tolerable levels. Blast plenum design is covered in TM 5-858-5.

(1) A blast valve will be installed in the air supply duct at the penetration point into the blast lock if additional ventilation air is required.

(2) Moving the antibackdraft valve to the vestibule side and ducting it to an additional blast valve above the inner blast door eliminates the blast plenum and provides a fully ventilated blast lock at ambient zero pressure. However, when the inner blast door is opened the vestibule pressurization is lost and that of the rest of the facility may be compromised by the sudden increase in air loss. As a result this alternate arrangement is not recommended.

*c*. Air pressure regulator M-1 shown in figure 6-6 is a slide valve designed for installation in a wall between two areas of a hardened structure where airflow and pressure differentials are desired when no permeable door is provided. Such a valve would be installed in the inside wall between the main occupied area of a structure and the vestibule or between any other areas requiring free airflow and pressure differentials.

*d*. Antiback-draft valve M-2 shown in figure 6-7 will not withstand the forces generated by a strong blast and will be installed upstream from a blast closure. It is used for exhausting air without danger of reversal of airflows in the event that structure pressurization is lost or sudden outside pressure increases as a result of high winds. These valves will be located in the outermost inside wall of a hardened structure as shown on figures 6-1 through 6-4. Similar wall or ceiling mounted, counterbalanced or spring type adjustable, heavy duty backdraft dampers, serviceable from either side, are commercially available.

*e*. To ensure that the required pressures are obtained and maintained, a manometer with necessary outlets to the outside, the vestibule, the decontamination area, and the main structure will be installed at a convenient control point.

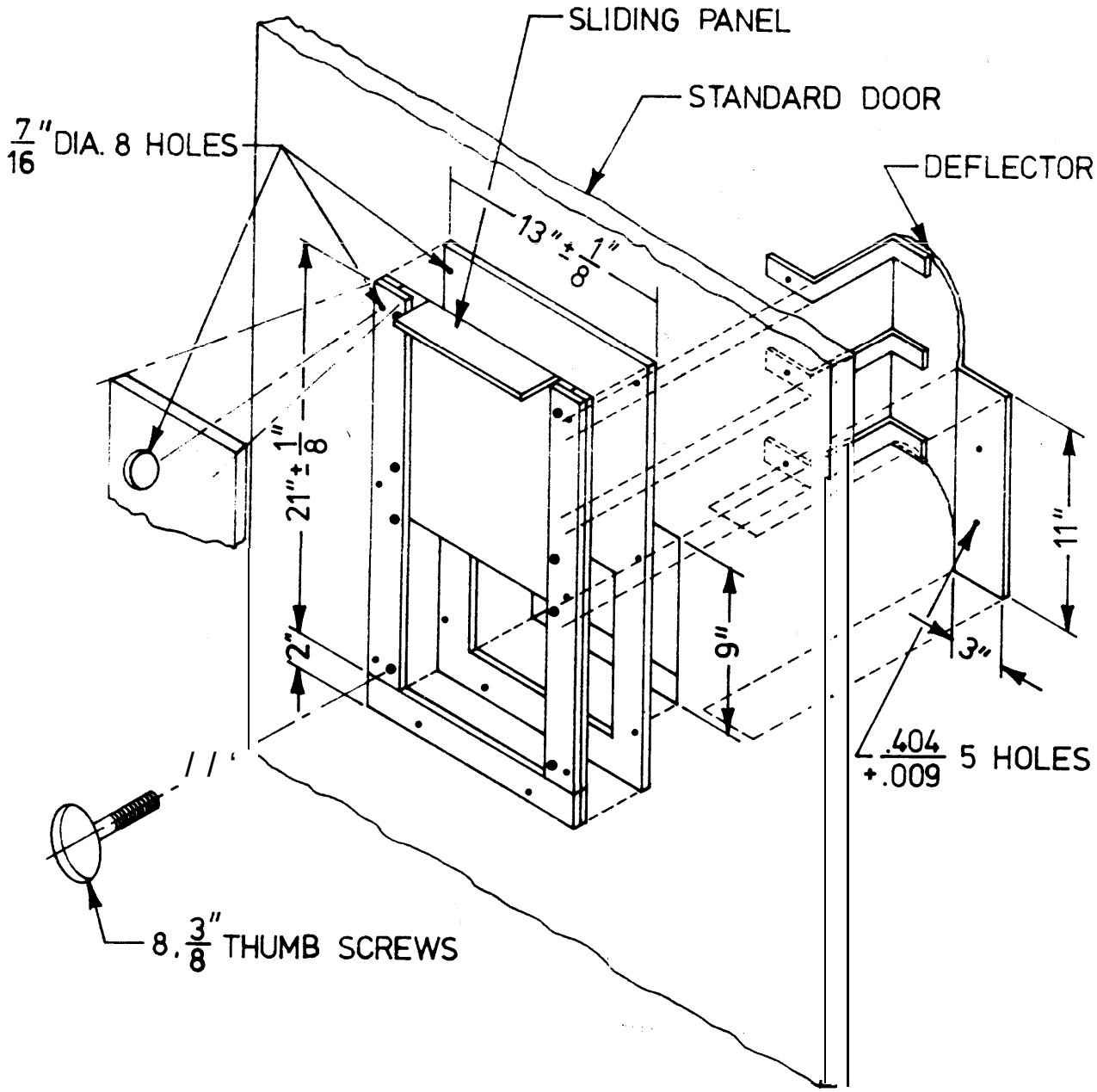


U.S. ARMY CORPS OF ENGINEERS

*Figure 6-6. Air pressure regulator M-1.*

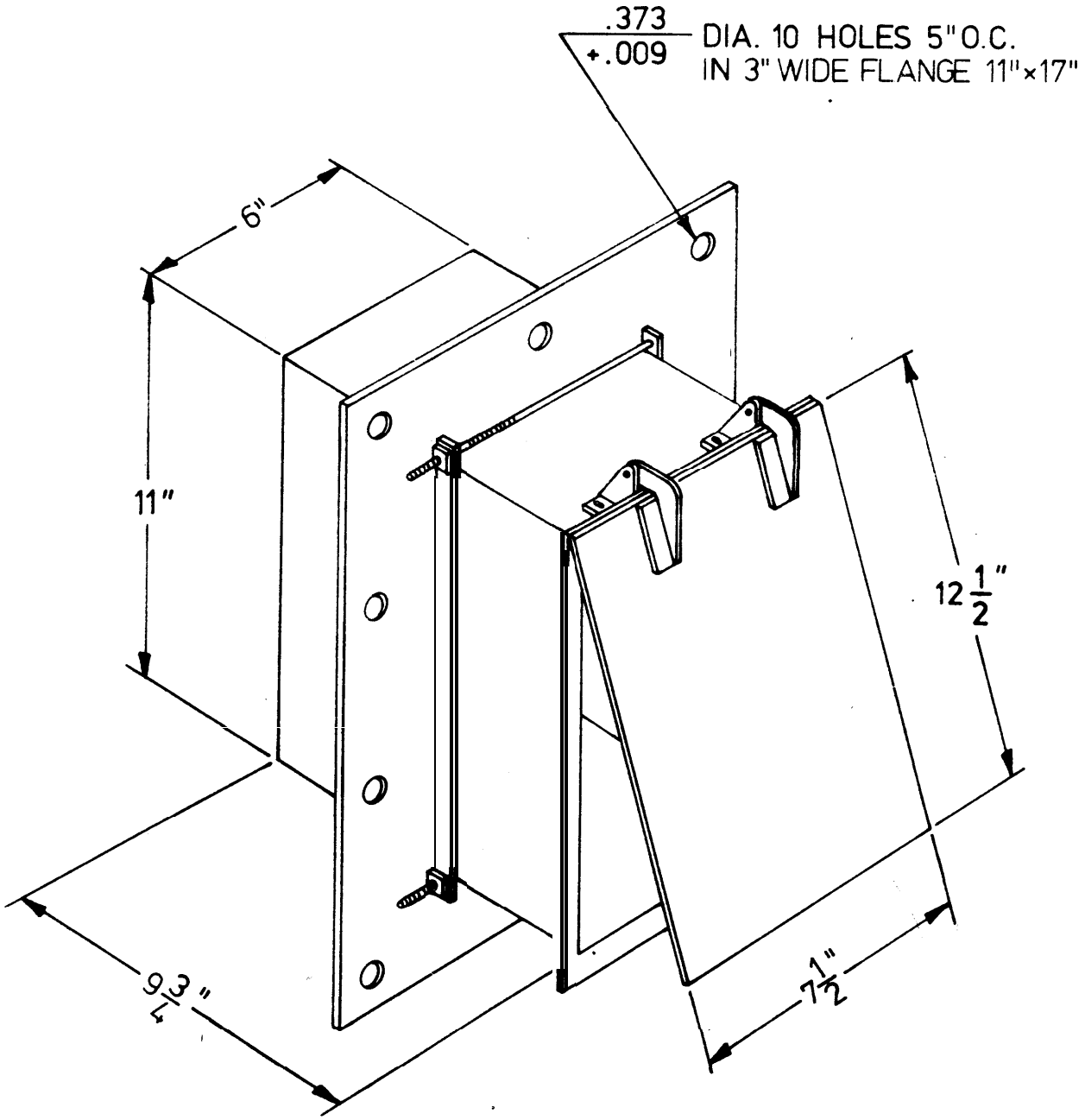


U.S. ARMY CORPS OF ENGINEERS

*Figure 6-7. Antiback-draft valve.*

# APPENDIX A

# REFERENCES

## Government Publications

### Department of the Army

| | |
|---|---|
| TM 5-810-1 | Mechanical Design: Heating, Ventilating, and Air Conditioning |
| TM 5-855-1 | Fundamentals of Protective Design (Non-Nuclear) |
| TM 5-855-5 | Nuclear Electromagnetic Pulse Protection |
| TM 5-858-1 | Facilities System Engineering |
| TM 5-858-2 | Weapons Effects |
| TM 5-858-3 | Structures |
| TM 5-858-4 | Shock Isolation Systems |
| TM 5-858-5 | Air Entrainment, Fasteners, Penetration Protection, Hydraulic Surge Protective Devices, EMP Protective Devices |
| TM 5-858-6 | Hardness Verification |
| TM 5-858-7 | Facility Support Systems |
| TM 5-858-8 | Illustrative Examples |

**National Bureau of Standards (NBS),** National Technical Information Service,5285 Port Royal Road, Springfield, VA 22161

NBS Report 9493 (January, 1968)

NBS Report 10373 (February, 1971)
office of Civil Defense Research Report 0CD-OS-62-58AD431 -046
Soil Thermal Properties, an Annotated Bibliography.

## Non-Government Publications

American Society of Heating, Refrigeration and Air-Conditioning Engineers, Inc. (ASHRAE), Publication Sales Department, 1791 Tullie Circle, N. E., Atlanta, Georgia 30329

- Handbook, Applications (1982 and Errata)
- Handbook, Equipment (1983 and Errata)
- Handbook, Fundamentals (1985)
- Handbook and Product Directory, Systems (1984 and Errata)
- Design of Smoke Control Systems for Buildings (1983)
- 62-81 Ventilation for Acceptable Indoor Air Quality

National Fire Protection Association (NFPA), Publications Dept., 60 Batterymarch St., Boston, MA 02110

- 90A-1985 Installation of Air Conditioning and Ventilating Systems
- 214-1983 Water Cooling Towers

Sheet Metal and Air Conditioning Contractors National Association, Inc., (SMACNA), 8224 Old Courthouse Rd., Vienna, VA 22180

HVAC Duct Construction' Standards-Metal and Flexible (lst Ed., 1985)

# APPENDIX B

# UNITS, SYMBOLS, AND EQUATIONS

## B-1. Units.

*a.* Customary English Units and their abbreviations after first occurrence are used throughout this manual.

amp = Ampere
Btu = British thermal unit
bhp = Brake horsepower
°F = Degree Fahrenheit
ft = Foot
h = Hour
hp = Horsepower
in. = Inch
in. wg = Inch of water gage
kW = kilowatt
lb = Pound
MBtu = One million Btu
W = Watt

*b.* Composite units such as Btu per lb per °F are written as a fraction with a blank space between consecutive factors (Btu/lb °F) unless a simpler customary abbreviation exists.

Btuh = Btu per hour
cfh = cubic feet per hour
cfm = cubic feet per minute
$ft^2$ = square feet
$ft^3$ = cubic feet
fph = feet per hour
fpm = feet per minute
g = 32.174 feet per second squared
gpm = gallons per minute
mph = miles per hour
psf = pounds per square foot
psi = pounds per square inch
psia = pounds per square inch absolute

## B-2. Symbols

A = Area, $ft^2$
a = Thermal diffusivity, $ft^2$ /h = h/ c
B = Dimensionless Biot number = rU/k
c = Specific heat Btu/lb °F
CO = Carbon monoxide
$CO_2$ = Carbon dioxide
D = Depth, ft
E = Full load motor efficiency
e = Base of natural logarithm
F = Dimensionless Fourier number = $at/r^2$
G = Dimensionless Graetz number = kL/w'c'
Gp = Mass transfer coefficient, lb/$ft^2$ h psi
H = Height, ft
h' = Air film heat transfer coefficient Btuh/$ft^2$ °F
I = Cost ration of rectangular to square duct having same cross section area
K = Driven equipment brake horsepower, bhp

$k$ = Thermal conductivity, Btuh/ ft °F
$L$ = Length, ft
$M$ = Dry basis weight percent of moisture
$\dot{m}$ = Mass flux, lb/ft$^2$
$N$ = Ration of the average temperature increase of rock volume to that of the rock well
$O_2$ = Oxygen
$P$ = Perimeter, ft
$P'$ = Room ambient air pressure, in. wg
$P_a$ = Actual water vapor pressure in air, psai
$P_s$ = Saturated water vapor pressure in air, psia
$P_w$ = Equilibrium water vapor pressure, psia
$Q$ = Total heat transfer, Btu
$q$ = Rate of heat transfer, Btuh
$q_e$ = Driven equipment input power, Btuh
$q_i$ = Electric motor input power, Btuh
$q_l$ = Latent heat load, Btuh
$q_m$ = Electric motor heat loss, Btuh
$q_s$ = Sensible heat load, Btuh
$q_t$ = Total heat load, Btuh
$R$ = Rectangular duct aspect ratio
$r$ = Equivalent radius, ft
$RH$ = Relative Humidity = $(P_a / P_s)$
$S$ = Cross section, ft$^2$
$T$ = Temperature, °F
$T_a$ = Air dry bulb temperature, °F
$T_b$ = Air dew point temperature, °F
$T_L$ = Air temperature L feet from inlet
$T_{Dmax}$ = Maximum ground temperature D feet below the surface
$t$ = Time, h
$U$ = Overall heat transfer coefficient, Btuh/ft$^2$·°F
$v$ = Velocity, fph
$V$ = Volume, ft$^3$
$V'$ = Airflow, cfm
$V_c$ = Room volume per capita, ft$^3$
$V'_{C02}$ = Carbon dioxide production rate, cfh
$V'_{02}$ = Oxygen consumption rate, cfh
$W$ = Width, ft
$w$ = Mass flow rate, lb/h
$w_i$ = Mass of ice, lb
$X$ = Double of the heat capacity ratio of excavated rock to reservoir coolant volume
$Y$ = Wall flux ratio of the radial cylindrical or spherical heat flow relative to the normal heat flow of the rectangular space of equal area it represents.
$Z$ = $r\sqrt{\omega/a}$
$\pi$ = Ratio of perimeter to diameter of a circle
$\rho$ = Density, lb/ft$^3$
$\phi$ = Phase lag, radian
$\omega$ = Angular velocity, radian/h

Prime and asterisk superscripts are added respectively to air and liquid coolant properties to avoid confusion with the properties of other materials. Numerical subscripts are used to identify specific variables in a given equation, but have otherwise no general symbolic value. Brackets around the chemical symbol indicated the concentration or volume fraction of that component in the air.

## B-3. Equation

*a.* Equations are written based on the following convention:

log (u) = Common logarithm (base 10) of u
ln (u) = Natural logarithm (base e) of u
exp(u) = Exponential function, $e^u$
f (u) = Function of argument u
2rf(u) = 2 times r times function of u

*b.* Auxiliary expressions such as b, $G_1$, $G_2$, $G_3$, $G_4$, n, p, P*, s, and u (defined in the text or by separate equations) are used to reduce the complexity of the main equations to a format suitable for computer programming. Negative exponents are used where the slash bar indicating division is not practical.

c. Brackets and parenthesis are used to enclose arguments of functions or indicate factors. The argument of a function is limited to the enclosed terms immediately following the function sign. Brackets and parenthesis are alternated in nested expressions. Within each set of parenthesis operations and functions are performed in the normal algebraic order:

(1) math functions (cos etc.)
(2) exponentiation and roots
(3) multiplication and division
(4) addition and subtraction

# GLOSSARY

## Abbreviations

AC = Air-Conditioning
AES = Air Entrainment Subsystem
AMCCOM = U.S. Army Armament Munitions and Chemical Command
ASHRAE = American Society of Heating, Refrigerating and Air-Conditioning Engineers
CB = Chemical and Biological
CBR = Chemical, Biological, and Radiological
CRDC = Chemical Research and Development Center
EMP = Electromagnetic Pulse
HVAC = Heating, Ventilation, and Air-Conditioning
NBS = National Bureau of Standards
NFPA = National Fire Protection Association
NSN = National Stock Number
OSHA = Occupational Safety and Health Administration
PMMP = Prime Mission Materiel/Personnel
RFI = Radio Frequency Interference
SMACNA = Sheet Metal and Air-Conditioning Contractor's National Association

## Explanation of Terms

| | |
|---|---|
| Air Entrainment System: | Accomplishes a continuous or a periodic transfer of air (gas) between the atmosphere and the facility; abbreviated AES. |
| Blast Valve: | Prevents entry of airblast over-pressure into hardened facilities. |
| Conversion: | Warm-up or cool-down required to bring the underground space temperature from initial to design levels. |
| Deeply-Buried Facility: | Facility buried deeply enough in the earth so that the prime-mission materiel/personnel will physically survive when weapons of the anticipated threat are delivered with great accuracy and detonated overhead. |
| EMP: | Electromagnetic pulse, associated primarily with the high intensity radiation and conduction fields induced by nuclear explosions, can produce extremely high currents in conducting elements, disrupting or destroying electronic components. |
| Endurance: | Combined transattack and postattack time frames in which the facility must fulfill its function. |
| Facility: | The structures and equipment required to house, support, and protect the prime-mission materiel/personnel. |
| Facilities Systems- | The iterative process of definition, synthesis, |
| Engineering: | design, analysis, test, and evaluation used to translate the imposed facility design requirements to an effective facility design. |

| | |
|---|---|
| Hardened: | Designed to resist an attack and protect the prime mission materiel/personnel from weapon effects. |
| Hard Mounted: | Equipment attached directly to its supports without the use of shock isolation. |
| Heat Sink: | A medium used to absorb the waste heat rejected by power generation or air-conditioning systems. Ice or water in cavities is generally used for hardened systems. |
| Holding: | Maintaining constant (thermostatted) air temperature conditions in the room. |
| Hydraulic Surge: | Water Hammer. |
| Operating Reliability: | Probability that an operating asset will perform its function for a specified time interval. |
| Port: | Atmospheric entrance (exit) detail of a duct. |
| Postattack: | The time frame beginning after the last burst. |
| Preattack: | The time frame prior to first burst or to button-up. |
| Prime Mission: | Primary mission of the system to which the facility is a subsidiary element. |
| Protective Subsystem: | Facility subsystem that protects the prime-mission materiel/personnel and other facility subsystems from the weapon effects. |
| Rectangular Space: | Underground cavity that approximates the geometry of a rectangular parallelepiped. |
| Rock Shell: | Approximate volume of rock affected by the heat transfer around a rectangular space. |
| Survivability: | The probability that' a facility- subsystem/ component failure-mode will physically survive an attack and retain its physical integrity during the specified endurance period. |
| Transattack: | The time frame between the first burst (or button-up) and the last burst. |
| Unreliability: | Less than perfect reliability but -not necessarily unacceptable. |
| Waveguide: | Hollow metallic tube that acts as a high-pass filter to electromagnetic energy. |



☆U.S. GOVERNMENT PRINTING OFFICE: 1988 - 201-421-71230