TM 5-811-14

TECHNICAL MANUAL

COORDINATED POWER SYSTEMS PROTECTION

APPROVED FOR PUBLIC RELEASE; DISTRIBUTION IS UNLIMITED

HEADQUARTERS, DEPARTMENT OF THE ARMY

FEBRUARY 1991

REPRODUCTION AUTHORIZATION/RESTRICTIONS

This manual has been prepared by or for the Government and, except to the extent indicated below, and is public property and not subject to copyright.

Copyrighted material included in the manual has been used with the knowledge and permission of the proprietors and is acknowledged as such at point of use. Anyone wishing to make further use of any copyrighted material, *by itself and apart from this text,* should seek necessary permission directly from the proprietors.

Reprints or republications of this manual should include a credit substantially as follows: "Department of the Army, TM 5-811-14, Coordinated Power System Protection."

If the reprint or republication included *copyrighted* material, the credit should also state: "Anyone wishing to make further use of copyrighted material, *by itself apart from the text,* should seek necessary permission directly from the proprietor."

TECHNICAL MANUAL
No. 5-811-14

HEADQUARTERS
DEPARTMENT OF THE ARMY
Washington, DC, *25 February 1991*

COORDINATED POWER SYSTEM PROTECTION

			Paragraph	Page
CHAPTER	1.	GENERAL REQUIREMENTS		
		Purpose	1-1	1-1
		Scope	1-2	1-1
		References	1-3	1-1
		Electrical power systems	1-4	1-1
		Design procedures	1-5	1-1
CHAPTER	2.	ELECTRICAL POWER SYSTEM OVERCURRENTS		
		General	2-1	2-1
		Normal current	2-2	2-1
		Overload current	2-3	2-1
		Short-circuit current	2-4	2-1
		Ground-fault current	2-5	2-1
		Sources of short-circuit current	2-6	2-2
		Time variation of short-circuit current	2-7	2-3
		Symmetrical and asymmetrical short-circuit current	2-8	2-5
CHAPTER	3.	OVERCURRENT PROTECTIVE DEVICES		
		General	3-1	3-1
		Motor overload relays	3-2	3-1
		Fuses	3-3	3-1
		Motor short-circuit protectors (MSCP)	3-4	3-3
		Circuit breakers	3-5	3-3
		Protective relays	3-6	3-9
		Automatic reclosing devices	3-7	3-10
CHAPTER	4.	PROTECTIVE DEVICES COORDINATION		
		General	4-1	4-1
		The coordination study	4-2	4-1
		Primary and medium-voltage coordination	4-3	4-3
		Low-voltage coordination	4-4	4-5
		Ground-fault coordination	4-5	4-5
		Coordination requirements	4-6	4-6
		Maintenance, testing, and calibration	4-7	4-7
		Example of phase coordination	4-8	4-7
		Example of ground-fault protection	4-9	4-23
CHAPTER	5.	ELECTRICAL SYSTEM PROTECTION TECHNIQUES		
		Generator protection	5-1	5-1
		Transformer protection	5-2	5-6
		Conductor protection	5-3	5-15
		Motor protection	5-4	5-20
		Bus and switchgear protection	5-5	5-29
		Ground-fault protection	5-6	5-34
		Miscellaneous equipment protection	5-7	5-44
Appendix	A.	REFERENCES		A-1
Appendix	B.	TYPICAL PROTECTIVE DEVICE SETTINGS		B-1
Appendix	C.	TYPICAL TIME-CURRENT CHARACTERISTIC CURVES		C-1
Appendix	D.	TYPICAL DEVICE AND EQUIPMENT RATINGS		D-1
Appendix	E.	PARTIAL RELAY DEVICE NUMBERS LIST		E-I
Appendix	F.	REPRESENTATIVE PROTECTIVE DEVICE OPERATING TIMES		F-1
Appendix	G.	COORDINATION EXAMPLES		G-1
Appendix	H.	COMPUTER SOFTWARE APPLICATIONS		H-1
BIBLIOGRAPHY				Bibliography-1
GLOSSARY				Glossary-1

APPROVED FOR PUBLIC RELEASE: DISTRIBUTIONS IS UNLIMITED

LIST OF FIGURES

Figure No.	Title	Page
2-1.	Short-circuit waveforms	2-4
2-2.	Symmetrical and asymmetrical current	2-6
3-1.	Solid-state circuit breaker characteristics	3-4
3-2.	Solid-state ground-fault characteristics	3-5
4-1.	Army ammunition plant single-line diagram	4-4
4-2.	Ground-fault protection	4-6
4-3.	Single-line diagram	4-8
4-4.	Key protection points	4-10
4-5.	LC feeder protection	4-12
4-6.	IC MAIN protection	4-14
4-7.	Switchgear feeder protection	4-16
4-8.	Switchgear main protection	4-18
4-9.	Composite time-current curve	4-20
4-10.	Composite time-current curve using solid-state devices	4-22
4-11.	Low-voltage ground-fault protection	4-24
5-1.	Single-isolated low-voltage generator	5-2
5-2.	Multi-isolated medium-voltage generator	5-3
5-3.	Medium industrial generators (up to 12.5MVA)	5-4
5-4.	Large industrial generators (greater than 12.5MVA)	5-5
5-5.	Through-fault protection curve for liquid-immersed category I transformers (5kVA to 500kVA single-phase, 15kVA to 500kVA three-phase)	5-8
5-6.	Through-fault protection curves for liquid-immersed category II transformers (501kVA to 1667kVA single-phase, 501kVA to 5000kVA three-phase)	5-9
5-7.	Through-fault protection curves for liquid-immersed category Ill transformers (1668kVA to 10,000kVA single-phase, 5001kVA to 10,000kVA single-phase, 5001kVA to 30,000kVA three-phase)	5-10
5-8.	Through-fault protection curve for liquid-immersed category IV transformers (above 10,000kVA single-phase, above 30,000kVA three-phase)	5-11
5-9.	Transformer overcurrent protection	5-13
5-10.	Phase differential relaying	5-15
5-11.	Maximum short-circuit current for insulated copper conductors; initial temperature 75 degrees C; final temperature 200 degrees C	5-17
5-12.	Emergency overload current percent of continuous rating EPR-XLP insulated 40 degrees C ambient	5-19
5-13.	Motor circuit requirements	5-21
5-14.	Minimum protection for induction motor less than 1500 Hp	5-23
5-15.	Minimum protection for induction motor 1500 HP and larger	5-24
5-16.	Minimum protection for MV, brushless synchronous motor less than 1500 Hp	5-25
5-17.	Minimum protection for MV, brushless synchronous motor 1500 Hp and larger	5-26
5-18.	Motor self-balance differential protection	5-28
5-19.	Single bus scheme with bus differential relaying	5-30
5-20.	Sectionalized bus scheme with bus differential relaying	5-31
5-21.	Double bus scheme with bus differential relaying	5-32
5-22.	Synchronizing bus scheme with bus differential relaying	5-33
5-23.	Residual or common relay	5-35
5-24.	Zero-sequence relay	5-36
5-25.	Ground return relay	5-37
5-26.	Ground differential relay	5-38
5-27.	Standard overcurrent protection	5-40
5-28.	Main-only ground-fault protection	5-41
5-29.	Improved ground-fault protection and coordination	5-42
5-30.	Main and feeder ground-fault protection	5-43
C-1.	Time-current characteristic curves for typical motor overload relay	C-2
C-2.	Time-current characteristic curve for typical solid state circuit breaker	C-3
C-3.	Time-current characteristic curve for typical ground fault attachment	C-4
C-4.	Time-current characteristic curve for typical protective relay (50/51)	C-5
C-5.	Time-current characteristic curve for typical medium-voltage fuse	C-6
C-6.	NEMA damage curves (through 1200A)	C-7
C-7.	NEMA damage curves (through 5000A)	C-S
G-1.	Example electrical system	G-2
G-2.	14kV switchgear feeder No.4	G-3
G-3.	15kV switchgear feeder No.7	G-4

LIST OF FIGURES — Continued

Figure No.	Title	Page
G-4.	M1 starting, overload, and CB short-circuit protection curves	G-7
G-5.	M2 starting, overload, and CB short-circuit protection curves	G-8
G-6.	M3 starting, overload, and CB short-circuit protection curves	G-9
G-7.	M4 starting, overload, and CB short-circuit protection curves	G-10
G-8.	Composite time-current curves for Example 1	G-11
G-9.	M1 starting, overload, and MCP short-circuit protection curves	G-14
G-10.	M2 starting, overload, and MCP short-circuit protection curves	G-15
G-11.	MS starting, overload, and MCP short-circuit protection curves	G-16
G-12.	M4 starting, overload, and MCP short-circuit protection curves	G-17
G-13.	Composite time-current curves for Example 2	G-18
G-14.	M1 starting, overload, and fuse short-circuit protection curves	G-20
G-15.	M2 starting, overload, and fuse short-circuit protection curves	G-21
G-16.	M3 starting, overload, and fuse short-circuit protection curves	G-22
G-17.	M4 starting, overload, and fuse short-circuit protection curves	G-25
G-18.	Ground-fault protection at main only (nonselective, single-zone)	G-25
G-19.	Ground-fault protection at main feeder, and branch (selective, time coordinated)	G-26
G-20.	Impedance diagram	G-28
G-21.	Per unit diagram	G-29
G-22.	M5 staffing, overload and fuse short-circuit curves	G-31
G-23.	Protective relays 1, 2, 3, 5, 6	G-33
G-24.	Protective relays 1, 2, 3, 4, 7	G-35

LIST OF TABLES

Table No.	Title	Page
3-1.	UL fuse classifications	3-2
3-2.	Circuit breaker trip ratings	3-6
3-3.	Circuit breaker application comparision	3-9
4-1.	Maximum overcurrent protection (in percent) per NFPA 70	4-7
4-2.	Summary of initial protective device settings	4-23
4-3.	Summary of new settings using solid-state devices	4-23
D-1.	Low voltage fuse ratings	D-1
D-2.	Distribution fuse cutouts	D-2
D-3.	Expulsion-type power fuses	D-2
D-4.	Boric acid type power fuses	D-2
D-5.	Current-limiting power fuses	D-2
D-6.	Typical tap ranges and settings of time-overcurrent relays	D-2
D-7.	Typical reactances of three-phases synchronous machines	D-2
F-1.	Relayed circuit breakers, 2.4-13.8kV	F-1
F-2.	Power air circuit breakers, below 600V	F-1
F-3.	Molded-case circuit breakers, below 600V	F-1
F-4.	Medium-and high-voltage fuses	F-1
F-5.	Low-voltage fuses	F-1
G-1.	Summary of device settings for figure G-23	G-32
G-2.	Summary of device settings for figure G-24	G-34

CHAPTER 1

ELECTRICAL POWER SYSTEM OVERCURRENTS

1-1. Purpose

This manual establishes the criteria for design, coordination, and construction of power systems for military projects. A secondary purpose is to acquaint designers with the general applications, philosophies, and purposes for the selection, calibration, setting, and testing of protective devices.

1-2. Scope

This manual describes protection techniques for electrical power supply and distribution systems. Guidance is included for coordination techniques and selection of protective devices.

1-3. References

Appendix A contains a list of references used in this document.

1-4. Electrical power systems

Electric power systems consist of four major categories: generating stations, transmission lines, distribution lines, and utilization systems. The electric power system industry converts and transports energy for utilization by numerous industrial, commercial, and residential customers. One of the largest users of electric energy in the United States is the U.S. Government.

a. Generation. The majority of electrical power produced in the United States is generated by steam-turbine plants. Hydro-electric generation accounts for only a small percentage because most available water sources have already been placed into service. Gas-turbines are used primarily for peaking during short periods of high demand. Fuel for steam-turbine plants is, for the most part, coal or nuclear.

b. Transmission lines. The voltage rating of large generators employed at primary generating stations ranges from 13.8kV to 24kV. Generator voltage is stepped up to transmission voltage level using transformers. Transmission voltage levels in the United States range from 115kV to 765kV. Standard voltages are 115kV, 138kV, 230kv, 345kV, 500kV, and 765kV.

c. Distribution lines. Transmission line voltage is stepped down to lower levels at main substations. These lower voltage levels range from about 34.5kV to 138kV. Distribution substations further step the voltage down to distribution voltage level which is in the range of 5kV to 34.5kV. Popular standard voltages at the distribution level are 4.16kV 12.47kV, 13.2kV, 13.8kV, and 34.5kV.

d. Utilization. Distribution transformers are used to step the distribution voltage down to utilization levels, usually at 600V. Standard utilization voltages include 480Y/277V, 460V, 208Y/120V, 240V, and 120V. Higher-level voltages, such as 6.9kv and 4.16kV, are popular standard voltages for supplying large industrial motor loads.

1-5. Design procedures

Utility features should be designed concurrently with the planning of the new installation. The selection and design of the power supply and distribution systems will depend on the availability, capacity, and reliability of the existing and new systems.

a. Mission. The plant and its mission must be given priority in establishing coordination requirements, and in selecting features such as dual feeders, or back-up power generation. Where several designs are feasible, the selection will be based on an economic study.

b. New installations. Assistance from local electric utility companies and cooperatives may be sought during preliminary design, but no commitment should be made to obligate the Government to procure electrical power or engage in contract negotiations. Contact with the local supplier should be limited to obtaining information on sources of electricity, their connection point location in regard to the site, conditions of service, utility capacity, and protective device ratings and settings. The electric supply and distribution systems should conform to prevailing practices of the utility service area insofar as they do not conflict with criteria in this manual.

c. Existing installations. Coordinate planning with the Directorate of Engineering and Housing, Base Civil Engineer, or official in charge to ensure that enough power will be available and that the design is compatible with the master plan for the installation. This may require anticipating what the master plan should be.

CHAPTER 2

ELECTRICAL POWER SYSTEM OVERCURRENTS

2-1. General

Electrical power systems must be designed to serve a variety of loads safely and reliably. Effective control of short-circuit current, or fault current as it is commonly called, is a major consideration when designing coordinated power system protection. In order to fully understand the nature of fault current as it is applied to electrical power system design, it is necessary to make distinctions among the various types of current available, normal as well as abnormal. It is also important to differentiate between the paths which the various types of current will take. Both current type and current path, as well as current magnitude, will affect the selection and application of overcurrent protective devices.

2-2. Normal current

Normal, or load, current may be defined as the current specifically designed to be drawn by a load under normal, operating conditions. Depending upon the nature of the load, the value of normal current may vary from a low level to a full-load level. Motors offer a good example. Normal motor current varies from low values (under light loading) to medium values (under medium loading) to maximum values (under maximum loading). Maximum load current is called full load current and is included on the motor nameplate as FLA (Full-Load Amperes). Normal current, therefore, may vary from low values to FLA values. Additionally, normal current flows only in the normal circuit path. The normal circuit path includes the phase and neutral conductors. It does not include equipment grounding conductors.

2-3. Overload current

Overload current is greater in magnitude than full-load current and flows only in the normal circuit path. It is commonly caused by overloaded equipment, single-phasing, or low line voltage, and thus is considered to be an abnormal current. Some overload currents, such as motor starting currents, are only temporary, however, and are treated as normal currents. Motor starting current is a function of the motor design and may be as much as twenty times full-load current in extreme cases. Motor starting current is called locked-rotor current and is included on the motor nameplate as LRA (Locked-Rotor Amperes). Overload current, then, is greater in magnitude than full-load amperes but less than locked-rotor amperes and flows only in the normal circuit path.

2-4. Short-circuit current

Short-circuit current is greater than locked-rotor current and may range upwards of thousands of amperes. The maximum value is limited by the maximum short-circuit current available on the system at the fault point. Short-circuit current may be further classified as bolted or arcing.

a. Bolted short-circuit current. Bolted short-circuit current results from phase conductors becoming solidly connected together. This may occur from improper connections or metal objects becoming lodged between phases. Obviously, large amounts of short-circuit current will flow into a bolted fault.

b. Arcing short-circuit current. Arcing short-circuit current results from phase conductors making less than solid contact. This condition may result from loose connections or insulation failure. When this happens, an arc is necessary to sustain current flow through the loose connection. Since the arc presents an impedance to the flow of current, smaller amounts of current will flow into an arcing fault than will flow into a bolted fault.

c. Failure classifications. Short-circuit currents, whether bolted or arcing, will involve two or more phase conductors. Line-to-line faults involve two-phase conductors (A-B, B-C, C-A) while three-phase faults involve all three phases (A-B-C). Although three-phase bolted short-circuits rarely occur in practice, short-circuit studies have traditionally been based upon the calculation of three-phase, bolted short-circuit current. Modern personal computers and associated software have made the calculation of all types of fault currents easier to accomplish.

2-5. Ground-fault current

Ground-fault current consists of any current which flows outside the normal circuit path. A ground-fault condition then, results in current flow in the equipment grounding conductor for low-voltage systems. In medium- and high-voltage systems, ground-fault current may return to the source through the earth. Ground-fault protection of medium-voltage and high-voltage systems has been applied successfully for years using ground current relays. Ground-fault protection of low-voltage systems is a considerable problem because of the pres-

ence and nature of low-level arcing ground faults. Ground-fault current on low-voltage systems may be classified as leakage, bolted, or arcing.

a. Leakage ground-fault current. Leakage ground-fault current is the low magnitude current (milliampere range) associated with portable tools and appliances. It is caused by insulation failure, and is a serious shock hazard. Personnel protection is accomplished by using ground-fault circuit interrupters (GFCI) in the form of GFCI-receptacles or GFCI-circuit-breakers.

b. Bolted ground-fault current. Bolted ground-fault current results when phase conductors become solidly connected to ground (i.e., the equipment grounding conductor or to a grounded metallic object). Bolted ground-fault current may equal or even exceed three-phase, bolted short-circuit current if the system is solidly grounded. Equipment protection is accomplished by using standard phase and ground overcurrent devices depending upon system voltage levels.

c. Arcing ground-fault current. Arcing ground-fault current results from a less than solid connection between phase conductors and ground. Because an arc is necessary to sustain current flow through the connection, the magnitude of arcing ground-fault current will be less than that of bolted ground-fault current. Depending upon the arc impedance, arcing ground-fault current may be as low as several amperes (low-level) or as high as 20-38 percent of three-phase, bolted short-circuit current (high level) on a 480V system. Considerable research has been conducted in the area of arcing ground-fault current magnitudes on low voltage systems. Some designers use the 38 percent value while others use the 20 percent figure. NEMA PB2.2 applies ground-fault damage curves instead of performing a calculation. Equipment protection is accomplished by using ground-fault protective (GFP) devices. Due to ionization of the air, arcing ground faults may escalate into phase-to-phase or three-phase faults.

2-6. Sources of short-circuit current

All sources of short-circuit current and the impedances of these sources must be considered when designing coordinated power system protection.

a. Synchronous generators . When a short-circuit occurs downstream of a synchronous generator, the generator may continue to produce output voltage and current if the field excitation is maintained and the prime mover continues turning the generator at synchronous speed. The flow of short-circuit current from the generator into the fault is limited only by the generator impedance and downstream circuit impedances. The magnitude of generator fault current depends on the armature and field characteristics, the time duration of the fault, and the load on the generator. The ability of a generator to supply current during a fault is a function of the excitation system.

(1) Some generator excitation systems do not have the ability to sustain short-circuit current. The magnitude of fault current is determined by the generator reactance, and, for such systems, can be essentially zero in 1.0 to 1.5 seconds.

(2) Static exciters derive excitation voltage from the generator terminals. Since static exciters do not sustain short-circuit current, protective devices on the system will not operate properly, or at all. Static exciters, therefore, are not recommended. Static exciters with current boost should be specified for applications requiring static excitation.

(3) Round-rotor generators with brushless exciters, typically above 10 MVA, can sustain short-circuit current for several seconds. Salient-pole generators less than 10 MVA, also with brushless exciters, will typically sustain short-circuit current at 300 percent of generator full load amperes.

b. Synchronous motors. When a short-circuit occurs upstream of a synchronous motor, the system voltage goes to zero, and the motor begins losing speed. As the motor slows down, the inertia of the load is actually turning the motor and causing it to act like a generator. The synchronous motor has a dc field winding, like a generator, and actually delivers short-circuit current into the fault until the motor completely stops. As with a generator, the short-circuit current is limited only by the synchronous motor impedance and the circuit impedance between the motor and the fault.

c. Induction motors. With one slight difference, a short-circuit upstream of an induction motor produces the same effect as with a synchronous motor. Since the induction motor has no dc field winding, there is no sustained field current in the rotor to provide flux as is the case with a synchronous machine. Consequently, the short-circuit current decays very quickly.

d. Supply transformers. Supply transformers are not sources of short-circuit current. Transformers merely deliver short-circuit current from the utility generators to the fault point. In the process, transformers change the voltage and current magnitudes. Transformer impedances will also limit the amount of short-circuit current from the utility generators. Standard tolerance on impedance is plus or minus 7.5 percent for two-winding transformers and plus or minus 10 percent for three-winding transformers. The minus tolerance should be used for short circuit studies and the plus tolerance for load flow and voltage regulation studies.

2-7. Time variation of short-circuit current

The short-circuit current from various sources is illustrated in figure 2-1. Since short-circuit current from rotating machines varies with time, it is convenient to express machine impedance (inductive reactance) as a variable value. This variable reactance will allow calculation of short-circuit current from a rotating machine at any instant in time. For the purpose of simplification, three values of reactance are assigned to rotating machines for the purpose of calculating short-circuit current at three specified times following the occurrence of a fault. These three values are called subtransient, transient, and synchronous reactances.

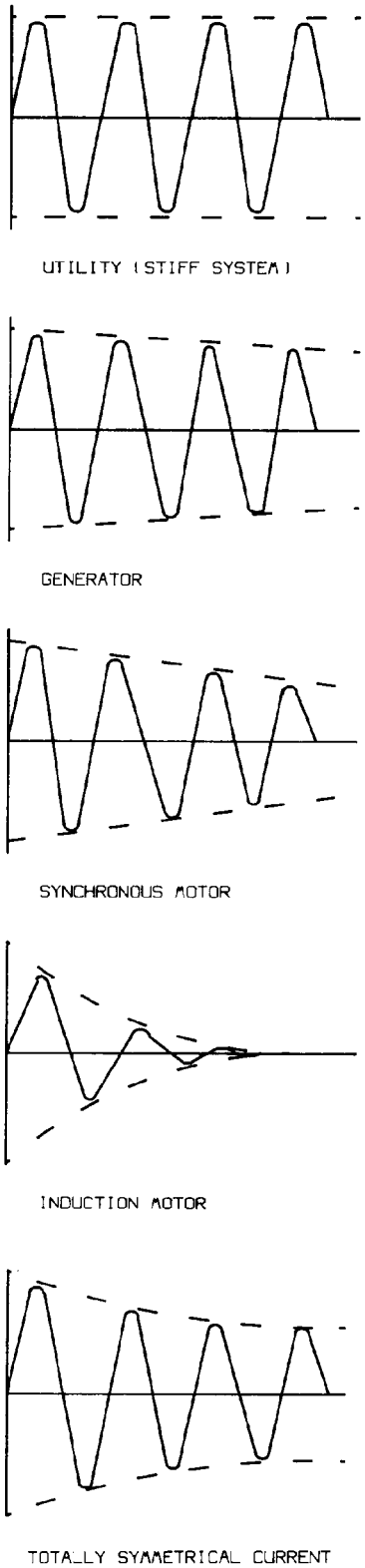

REPRINTED WITH PERMISSION FROM ANSI/IEEE STD 242-1986, IEEE RECOMMENDED PRACTICE FOR PROTECTION AND COORDINATION OF INDUSTRIAL AND COMMERCIAL POWER SYSTEMS, COPYRIGHT 1986 BY IEEE

Figure 2-1. Short circuit waveforms.

a. Subtransient reactance (Xd”). Subtransient reactance *is* a value used to determine the short-circuit current during the first few cycles after a short-circuit occurs. This is the short-circuit current value to be used in all short-circuit studies.

b. Transient reactance (Xd’). Transient reactance *is* a value used to determine the short-circuit current from the first few cycles up to about 30 cycles after the short-circuit occurs (depending upon the design of the machine). This value is often used in voltage regulation studies.

c. Synchronous reactance (Xd). Synchronous reactance is a value used to determine the short-circuit current when the steady state condition has been reached. Steady state is reached several seconds after the short-circuit occurs. This value is often used to determine the setting of generator backup overcurrent relays.

2-8. Symmetrical and asymmetrical short-circuit currents

As shown in figure 2-2, "symmetrical" and "asymmetrical” are terms used to describe the symmetry of the short-circuit current waveform around the zero axis. If a short-circuit occurs in an inductive reactive circuit at the peak of the voltage waveform, the resulting short-circuit current will be totally symmetrical. If a short-circuit, in the same circuit, occurs at the zero of the voltage waveform, the resulting short-circuit current will be totally asymmetrical. If a short-circuit, in the same circuit, occurs at some time between the zero and peak of the voltage waveform, the resulting short-circuit current will be partially asymmetrical. The amount of offset or asymmetry depends on the point when the fault occurs. In circuits containing both resistance and inductive reactance, the amount of asymmetry will vary between the same limits as before. However, the X/R ratio (ratio of inductive reactance to resistance looking upstream from the fault point) will determine the rate of decay of the DC component. As X/R increases, the rate of decay decreases. Interrupting current ratings may have to be derated for high X/R values. Practically speaking, most all short-circuit currents are partially asymmetrical during the first few cycles after a short-circuit occurs. Modern personal computers can now be used to easily calculate symmetrical and asymmetrical current values at various times after a fault. Low-voltage protective devices are rated on a symmetrical basis but tested on an asymmetrical basis. Medium-voltage switchgear has a momentary and an interrupting rating. The momentary rating is the short-circuit duty during the first cycle after a fault, and de- fines the equipment's ability to close and latch against worst-case mechanical stresses. The interrupting rating is the short-circuit duty as the equipment contacts part, and is expressed in symmetrical amperes or MVA. Medium-voltage fuses have interrupting ratings expressed in symmetrical amperes.

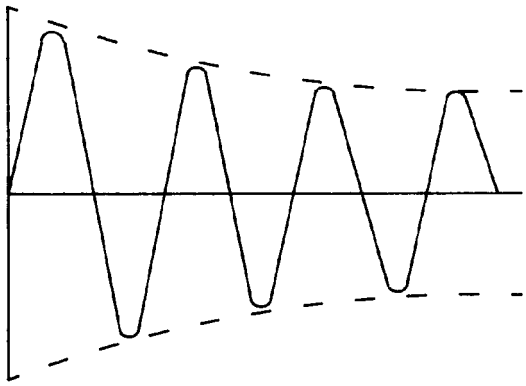

TOTALLY SYMMETRICAL CURRENT

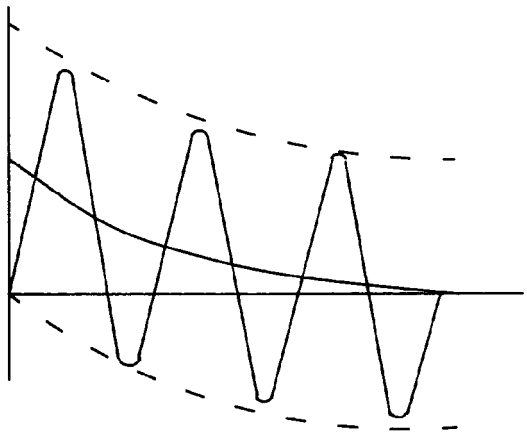

TOTALLY ASYMMETRICAL CURRENT

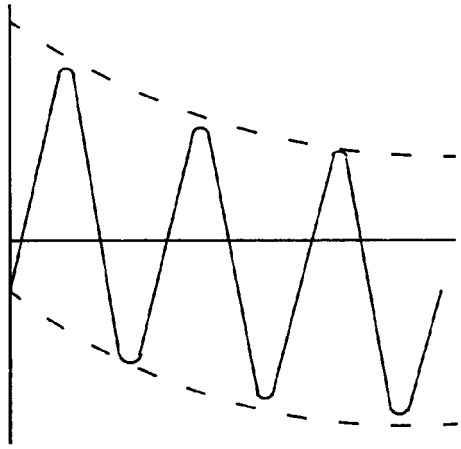

PARTIALLY ASYMMETRICAL CURRENT

US ARMY CORPS OF ENGINEERS

Figure 2–2. Symmetrical and asymmetrical current.

CHAPTER 3

OVERCURRENT PROTECTIVE DEVICES

3-1. General

Design of power system protection requires the proper application motor of overload relays, fuses, circuit breakers, protective relays, and other special purpose overcurrent protective devices. This chapter provides detailed information about various protective devices, illustrates their time-current characteristics, and identifies information required to design coordinated power system protection.

3-2. Motor overload relays

a. Thermal overload relays. The most common overcurrent protective device is the thermal overload relay associated with motor starting contactors. In both low-voltage and medium-voltage motor circuits, thermal overload relays detect motor overcurrents by converting the current to heat via a resistive element. Thermal overload relays are simple, rugged, inexpensive, and provide very effective motor running overcurrent protection. Also, if the motor and overload element are located in the same ambient, the thermal overload relay is responsive to changes in ambient temperature. The relay trip current is reduced in a high ambient and increased in a low ambient. Typical time-current characteristic curves for thermal overload relays are shown in appendix C. The curves level off at about 10 to 20 times full-load current, since an upstream short-circuit device, such as a fuse or circuit breaker, will protect the motor circuit above these magnitudes of current. The thermal overload relay, therefore, combines with the short-circuit device to provide total overcurrent protection (overload and short-circuit) for the motor circuit.

(1) Melting alloy type overload relays, as the name implies, upon the circuit when heat is sufficient to melt a metallic alloy. These devices may be reset manually after a few minutes is allowed for the motor to cool and the alloy to solidify.

(2) Bimetallic type overload relays open the circuit when heat is sufficient to cause a bimetallic element to bend out of shape, thus parting a set of contacts. Bimetallic relays are normally used on automatic reset, although they can be used either manually or automatically.

(3) Standard, slow, and quick-trip (fast) relays are available. Standard units should be used for motor starting times up to about 7 seconds. Slow units should be used for motor starting times in the 8-12 second range, and fast units should be used on special-purpose motors, such as hermetically sealed and submersible pump motors which have very fast starting times.

(4) Ambient temperature — compensated overload relays should be used when the motor is located in a nearly-constant ambient and the thermal overload device is located in a varying ambient.

b. Magnetic current overload relays. Basically, magnetic current relays are solenoids. These relays operate magnetically in response to an overcurrent. When the relay operates, a plunger is pulled upward into the coil until it is stopped by an insulated trip pin which operates a set of contacts. Magnetic relays are unaffected by changes in ambient temperature. Magnetic current relays may be used to protect motors with long starting times or unusual duty cycles, but are not an alternative for thermal relays.

c. Information required for coordination. The following motor and relay information is required for a coordination study.

(1) Motor full-load ampers rating from the motor nameplate.

(2) Overload relay ampere rating selected in accordance with NFPA 70.

(3) Overload relay time-current characteristic curves.

(4) Motor locked rotor amperes and starting time.

(5) Locked rotor ampere damage time for medium-voltage motors.

3-3. Fuses

A fuse is a non-adjustable, direct acting, single-phase device that responds to both the magnitude and duration of current flowing through it. Fuses may be time delay or non-time delay, current-limiting or non-current-limiting, low-voltage or high-voltage. Fuse terminology and definitions are listed in the glossary. Underwriter's Laboratories (UL) further classifies low-voltage fuses as shown in table 3-1.

Table 3-1. UL fuse classifications

LOW-VOLTAGE FUSES (0-600V)	
Noncurrent Limiting	*Current Limiting*
PLUG FUSES	CLASS CC
CLASS H (Renewable)	CLASS T
CLASS H (Nonrenewable)	CLASS K (K-1, K-5)
	CLASS G
	CLASS J
	CLASS L
	CLASS R (RK-1, RK-5)

a. Nontime delay fuses. The Nontime delay fuse consists of a single type of fusible element, called a short-circuit element. Normal overloads and current surges often cause nuisance openings of this type of fuse. For this reason, substantial oversizing of these fuses is required when used in motor circuits. Therefore, Nontime delay fuses should be used only in circuits with noninductive loads such as service entrances and circuit breaker back-up protection.

b. Time delay fuses. The time delay fuse is constructed with two different types of fusible elements: overload and short-circuit. These elements are somewhat similar in operation to the thermal and magnetic elements of an inverse-time circuit breaker. The overload element will interrupt all overload currents, and the short-circuit element will open in response to short-circuit currents. The time delay fuse can be applied in circuits subject to normal overloads and current surges (e.g., motors, transformers, solenoids, etc.) without nuisance opening. Significant oversizing is not necessary.

c. UL classification. As shown in table 3-1, UL has established distinct classifications for low-voltage fuses. These classifications define certain operating characteristics associated with a particular fuse class. However, the fact that a fuse is classified, for example, as UL RK-5 does not mean that all of its operating characteristics are identical with those of other manufacturers' Class RK-5 fuses. Both time delay and Nontime delay fuses are classified as RK-5. Therefore, each type of RK-5 fuse will require different application procedures. UL classifications and time delay characteristics should always be specified along with current and voltage ratings for low-voltage fuses. This will eliminate any confusion on the Contractor's part and insure that the correct fuse is always provided. UL Class H fuses are tested for short-circuit ratings at 10,000 amperes symmetrical, and are, therefore, not current-limiting. UL Class K fuses are tested at 50,000, 100,000, or 200,000 amperes symmetrical, and are, therefore, current-limiting. However, Class K fuses are not labeled as current-limiting, because Class K fuses are interchangeable with UL Class H and NEMA Class H fuses. Therefore, Class H and Class K fuses should be avoided in favor of Class RK and Class L fuses. Rejection-type fuses and fuse holders prevent underrated fuses from inadvertently being installed.

d. Time-current characteristic curves. Fuse curves are available from various manufacturers. 'Typical fuse time-current characteristic curves are shown in appendix C. Medium-voltage and high-voltage fuses show an operating "band" while low-voltage fuses show an operating "line." The band associated with medium-voltage and high-voltage fuses graphically displays minimum melting time and total (or maximum) clearing time as a function of current magnitude.

e. Current-limitation. Current-limiting fuses are so fast acting that they are able to open the circuit and remove the short-circuit current well before it reaches peak value. Current-limiting fuses "limit" the peak short-circuit current to a value less than that available at the fault point and open in less than one-half cycle. To be effective, however, such fuses must be operated in their current-limiting range. Peak let-through charts, also called current-limiting effect curves, should be used to determine the effectiveness or degree of protection offered by current-limiting fuses. These curves plot instantaneous peak let-through current as a function of available RMS symmetrical short- circuit current.

f. Medium-voltage fuses. Medium-voltage fuses are either (1) distribution fuse cutouts or (2) power fuses. Distribution fuse cutouts are designed for pole or crossarm mounting and should be used primarily on distribution feeders and circuits. Power fuses have a higher dielectric strength than distribution fuse cutouts and should be used primarily in substations. The majority of medium-voltage fuses are used for applications within buildings, vaults, or enclosures. They are boric acid type fuses rated 4160—34.5kV or current-limiting fuses rated 2400V—34.5kV.

g. High-voltage fuses. Some medium-voltage fuses and all high-voltage fuses are rated for outdoor use only. These devices are boric acid type fuses rated 4160V—138kV, fiberlined expulsion fuses rated 7200V—l6lkV, or distribution fuse cutouts rated 4800V—138kV.

h. Current-limiting power fuses. Current-limiting power fuses include E-rated, C-rated, and R-rated fuses. E-rated, current-limiting, power fuses rated 100E and below open in 300 seconds at currents between 200 percent and 240 percent of their E-rating. Fuses rated greater than 100E open in 600

seconds at currents between 220 percent and 264 percent of their E-rating. C-rated, current-limiting power fuses open in 1000 seconds at currents between 170 percent and 240 percent of their C-rating. R-rated, current-limiting power fuses are suitable for use on medium-voltage motor controllers only. Generally, R-rated fuses open in 20 seconds at 100 times the R-rating.

I. Information required for coordination. The following fuse information is required for a coordination study:

(1) Fuse continuous current rating.

(2) Fuse time-current characteristic curves.

(3) Fuse interrupting-current rating.

(4) UL classification and time delay characteristics.

j. Fuse ratings. Standard voltage and current ratings for fuses can be found in appendix D.

3-4. Motor short-circuit protectors (MSCP)

Motor short-circuit protectors are current-limiting, fuse-like devices designed specifically for use in switch-type, combination motor controllers. UL considers MSCPs to be components of motor controllers rather than fuses. Therefore, MSCPs are marked by letter designations (A-Y) instead of ampere ratings and may not be used as fuses. MSCPs may be used in motor circuits provided the MSCP is part of a combination motor controller with overload relays and is sized not greater than 1,300 percent of motor FLA (NFPA 70). This relatively new arrangement (first recognized by NFPA 70-1971), provides short-circuit protection, overload protection, motor control, and disconnecting means all in one assembly. MSCPs provide excellent short-circuit protection for motor circuits as well as ease of selection. However, the limited number of manufacturers that can supply MSCPs has so far prohibited their use by the Government except for sole-source applications.

3-5. Circuit breakers

A circuit breaker is a device that allows automatic opening of a circuit in response to overcurrent, and also manual opening and closing of a circuit. Circuit breaker terminology and definitions are listed in the glossary. Low-voltage power circuit breakers have, for years, been equipped with electromechanical trip devices. Modern, solid-state devices, however, are rapidly replacing electromechanical trips. Solid-state trips are more accessible, easier to calibrate, and are virtually unaffected by vibration, temperature, altitude, and duty-cycle. Furthermore, solid-state devices are easy to coordinate, and provide closer, more improved protection over electromechanical units. Still, electromechanical units have their applications. Industrial plants with harsh environments, such as steel mills and ammunition plants, may demand the more rugged electromechanical devices. Today, molded-case circuit breakers are being equipped with solid-state trip units to obtain more complex tripping characteristics. Surface-mount, or integrated-circuit, technology is allowing very sophisticated molded-case circuit breakers to be constructed in small frame sizes. Most low-voltage power circuit breakers are also being equipped with solid-state trip units. New microprocessor-based circuit breakers are now available that offer true RMS current sensing. The increased use of switching-mode power supplies for computer systems and other harmonic-generating, non-linear loads created the need for true RMS sensing, which is a major advantage over peak-sensing trip units.

a. Low-voltage circuit breakers. Low-voltage circuit breakers are classified as molded-case circuit breakers or power circuit breakers. A molded-case circuit breaker is an integral unit enclosed in an insulated housing. A power circuit breaker is designed for use on circuits rated 1000 Vac and 3000 Vdc and below, excluding molded-case circuit breakers.

(1) Low-voltage circuit breaker trip units may be of the electromechanical (thermal-magnetic or mechanical dashpot) or solid-state electronic type. Low-voltage circuit breakers may include a number of trip unit characteristics. These characteristics are listed below and illustrated in figures 3-1 and 3-2. Typical circuit breaker time-current characteristic curves may be found in appendix C. Circuit breaker curves are represented as "bands." The bands indicate minimum and maximum operating times for specific overcurrents.

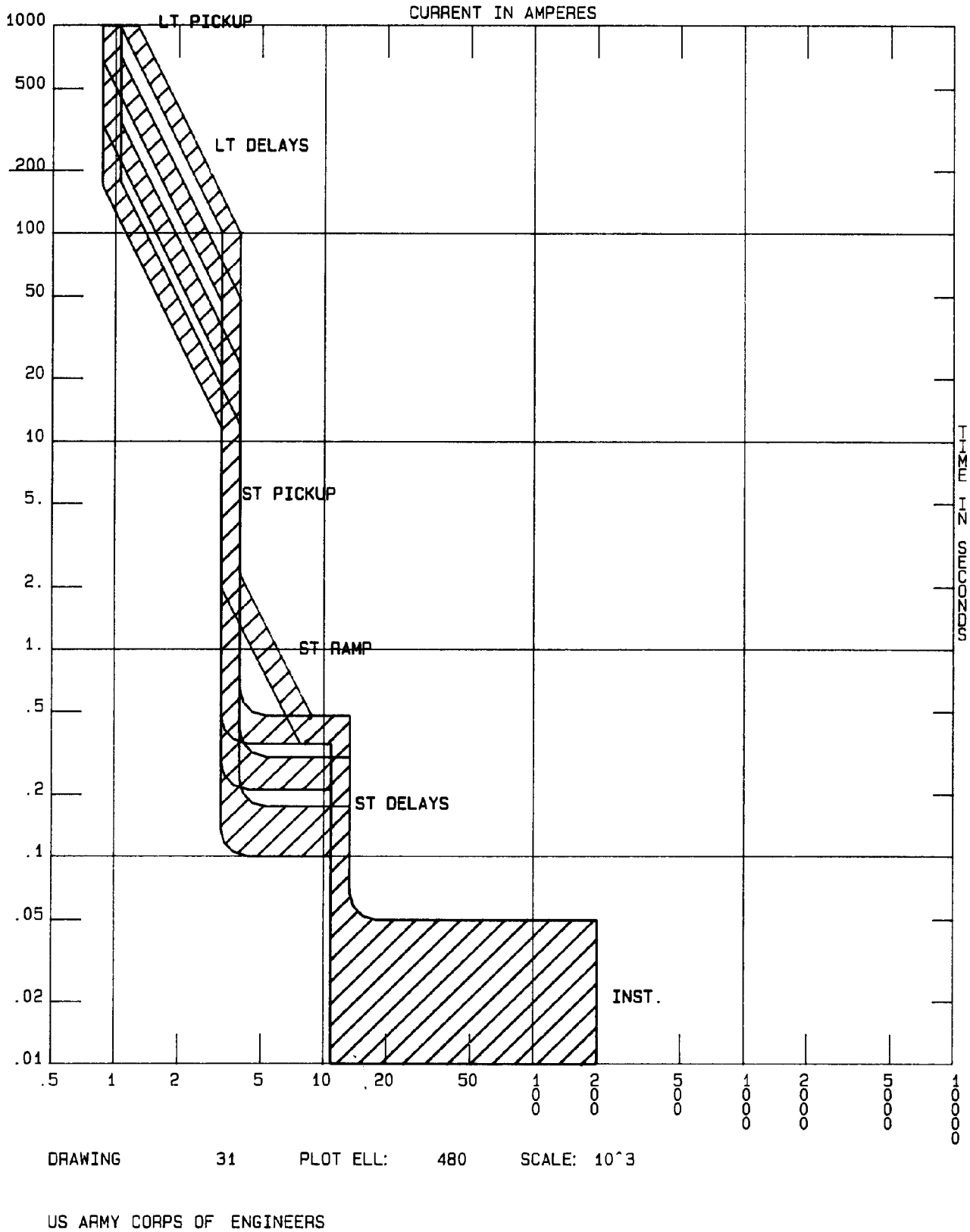

Figure 3-1. Solid-state circuit breaker characteristics.

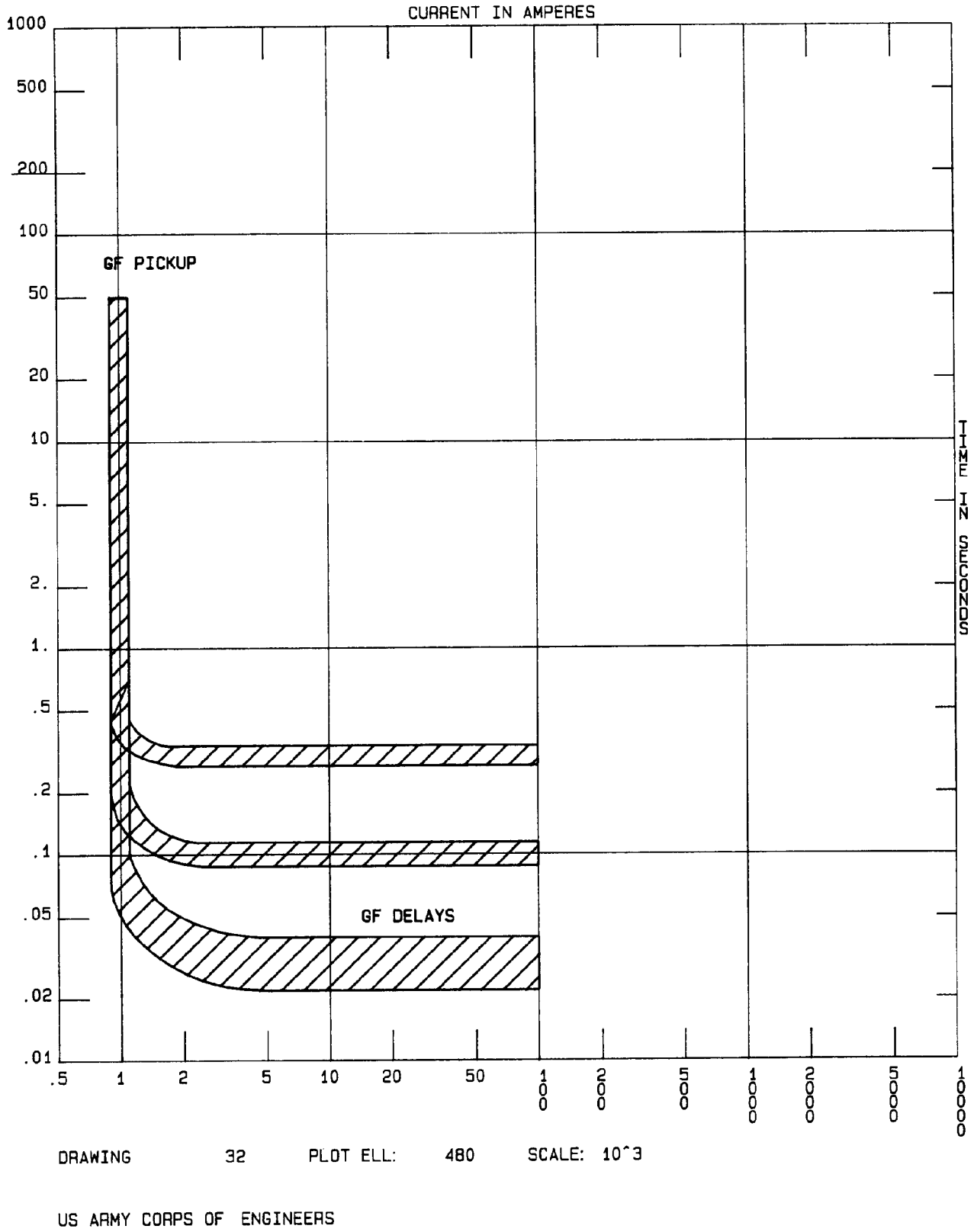

Figure 3-2. Solid state ground-fault characteristics.

(a) Long-time pick-up allows fine tuning of the continuous current rating. Typical settings range from 50 percent-100 percent of circuit breaker sensor current rating.

(b) Long-time delay varies the tripping time under sustained overcurrent and allows momentary overloads. Three to six bands are typically available.

(c) Short-time pick-up controls the amount of high-level current that can be carried for short periods of time without tripping and allows downstream devices to clear faults without tripping upstream devices. Typical settings range from 1.5 to 9 times long-time pick-up setting.

(d) Short-time delay is used with short-time pick-up to improve selectivity. It provides time delay to allow the circuit breaker to trip at the selected short-time pick-up current. Three bands (minimum, intermediate, and maximum) are typically available.

(e) Short-time I^2t switch introduces a ramp function into the short-time characteristic curve to improve coordination with downstream devices whose characteristic curves overlap the circuit breaker characteristic curve.

(f) Instantaneous pick-up establishes the tripping current level with no intentional time delay. Typical settings range from 1.5 to 9 times Long-time pick-up setting.

(g) Ground-fault pick-up establishes ground fault tripping current level and may incorporate the I^2t function. Ground-fault pick-up is typically adjustable from 20 percent to 100 percent of sensor rating. Ground-fault pick-up should never be set above 1200 A in accordance with NFPA 70.

(h) Ground-fault delay incorporates time delay for coordination. Three to six time delay bands are typically available. Ground-fault delay should not exceed one second for ground-fault currents greater than 3000 A in accordance with NFPA 70.

(2) Specifications should detail only those functions that are necessary on a particular project.

(a) The continuous current rating may be fixed or adjustable.

(b) Molded-case breakers with solid-state trips and power breakers normally have adjustable long-time and short-time functions.

(c) Power breakers may or may not have the instantaneous function.

(d) Most molded-case circuit breakers, especially in the smaller sizes, are not provided with long-time adjustments, short-time functions, or ground-fault functions.

(3) The inverse-time (or thermal-magnetic) circuit breaker contains a thermal and a magnetic element in series and is similar in operation to time delay fuses. This circuit breaker will trip thermally in response to overload currents and magnetically in response to short-circuit currents. Magnetic tripping is instantaneous while thermal tripping exhibits an inverse-time characteristic (i.e., the circuit breaker operating characteristics of time and current are inversely proportional). Inverse-time circuit breakers have three basic current ratings: trip rating, frame rating, and interrupting rating. Trip rating is the minimum continuous current magnitude required to trip the circuit breaker thermally. The frame rating identifies a particular group of circuit breakers and corresponds to the largest trip rating within the group. Each group consists of physically interchangeable circuit breakers with different trip ratings, as shown in table 3-2. Although NEMA recognizes other frame ratings in addition to those listed in table 3-2, these are the most common ones supplied by manufacturers. The interrupting rating describes the short-circuit withstand capability of a circuit breaker.

Table 3-2. Circuit breaker trip ratings

Frame rating (AF) (amperes)	*Trip ratings (AT) (amperes)*
100 AF	15–100 AT
225 AF	125–225 AT
400 AF	250–400 AT
1,000 AF	500–1,000 AT
2,000 AF	1,200–2,000 AT

(4) The instantaneous-trip circuit breaker is nothing more than an inverse-time circuit breaker with the thermal element removed and is similar in operation to the non-time delay fuse. This circuit breaker is often referred to by other names, such as, magnetic circuit breaker, magnetic-only circuit breaker, or motor circuit breaker. Instantaneous-trip circuit breakers may be used in motor circuits, but only if adjustable, and if part of a circuit breaker type, combination motor controller with overload relays. Such an arrangement is called a Motor Circuit Protector (MCP) and provides short-circuit protection (circuit breaker magnetic element), overload protection (overload relays), motor control, and disconnecting means all in one assembly. Instantaneous-trip circuit breakers have frame and interrupting ratings but do not have trip ratings. They do have an instantaneous current rating which, for motor circuits, must be adjustable

and not exceed 1,300 percent of the motor FLA (NFPA 70). MCPs provide excellent motor circuit protection and ease of specification, and should be considered for installations with numerous motors where MCCs would be specified.

(5) A current-limiting circuit breaker does not employ a fusible element. When operating within its current-limiting range, a current-limiting circuit breaker limits the let-through I^2t to a value less than the I^2t of the quarter cycle of the symmetrical current. Current-limiting circuit breakers employ single and double break contact arrangements as well as commutation systems to limit the let-through current to satisfy the fundamental definition of current-limitation without the use of the fuses. Current-limiting circuit breakers can be reset and service restored in the same manner as conventional circuit breakers even after clearing maximum level fault currents. Manufacturers of current-limiting circuit breakers publish peak let-through current (I_p) and energy (I^2t curves. The manufacturer should be contacted for specific application information.

(6) Integrally fused circuit breakers employ current limiters which are similar to conventional current-limiting fuses but are designed for specific performance with the circuit breaker. Integrally fused circuit breakers also include overload and low level fault protection. This protection is coordinated so that, unless a severe fault occurs, the current limiter is not affected and replacement is not required. Current limiters are generally located within the molded case circuit breaker frame. An interlock is provided which ensures the opening of the circuit breaker contacts before the limiter cover can be removed. Single phasing is eliminated by the simultaneous opening of all circuit breaker poles. Many circuit breakers employ mechanical interlocks to prohibit the circuit breaker from closing with a missing current limiter. The continuous ampere rating of integrally fused circuit breakers is selected in the same manner as for conventional circuit breakers. The selection of the individual limiters should be made in strict accordance with the manufacturer's published literature to achieve the desired level of circuit protection.

(7) A molded-case circuit breaker can be applied in a system where fault current may exceed its rating if it is connected in series on the load side of an acceptable molded-case circuit breaker. Such an application is called cascade system operation. The upstream breaker must be rated for maximum available fault current and both breakers must be tested and UL certified for a series rating. Cascade operation depends upon both breakers opening at the same time, and upon the fact that the upstream breaker will always open. Since molded-case circuit breaker contacts are designed to "blow open" on high short-circuit currents, failure of the upstream breaker to operate is not a concern. Since low-voltage power breakers are not designed to "blow open," power breakers should not be applied in cascade. Individual components within a cascade system should not be replaced since the entire system is UL approved. Individual components are not UL approved. Additionally, individual components should be from the same manufacturer as the cascade system. By virtue of the design, this approach does not pro- vide a coordinated system.

b. Medium-voltage circuit breakers. ANSI defines medium-voltage as 1000V or more, but less than 100kV. Switching a medium-voltage circuit involves either opening or closing a set of contacts mechanically. When closing the contacts, the applied mechanical force must be greater than the forces which oppose the closing action. An arc is created when the contacts are opened, which must be extinguished. Medium-voltage circuit breakers are classified according to the medium (oil, air, vacuum, or SF_6) in which their contacts are immersed. Normally, metal clad, drawout switchgear is used at medium-voltages up to 15kV. Air-magnetic, vacuum, and SF_6-filled-interrupter circuit breakers are available in drawout switchgear. Oil circuit breakers are used outdoors, as individual units, and thus are not available in drawout switchgear mounting.

(1) Medium-voltage air circuit breakers are either of the air-magnetic type or of the air-blast type. Due to cost and size restrictions, air-blast breakers are not normally used in medium-voltage drawout switchgear construction. In recent years, most medium-voltage drawout switchgear employed air-magnetic breakers. However, due to cost, size, and noise limitations, vacuum and SF_6 circuit breakers are replacing air circuit breakers in medium-voltage drawout switchgear.

(2) The contacts of vacuum circuit breakers are hermetically-sealed in a vacuum chamber or “bottle”. The vacuum in a new bottle should be about 10^{-8} Torr, and should be at least 10^{-4} Torr for proper operation. One Torr equals 760 millimeters of mercury. Vacuum interrupters are much smaller and quieter than air circuit breakers, and require no arc chutes. Vacuum circuit breakers in drawout switchgear mounting are available in a variety of continuous current and MVA ratings at 5kV to 15kV.

(3) Sulfur hexaflouride, SF_6, is a nonflammable, nontoxic, colorless, and odorless gas, which has long been used in high-voltage circuit breakers. Now, SF_6-filled-interrupter circuit breakers are

available in drawout switchgear for 5kV and 15kV applications. Like vacuum interrupters, the circuit breaker contacts are immersed in a hermetically-sealed bottle filled with SF_6 gas. SF_6 circuit breakers in drawout switchgear mounting are available in a variety of continuous current and MVA ratings.

c. EMI/RFI considerations. With today's increasing use of sensitive, solid-state devices, the effects of Electro-Magnetic Interference (EMI) and Radio-Frequency Interference (RFI) must be considered. Solid-state devices, due to their many advantages, are rapidly replacing the rugged electromechanical devices previously used. One disadvantage of solid-state devices, however, is their sensitivity to power source anomalies and electrostatic and electromagnetic fields. Recent developments in the design and packaging of solid-state devices have incorporated effective shielding techniques. However, the designer must still evaluate the environment and ensure that additional shielding is not required. Equipment and devices must comply with MIL-STD-461.

d. In formation needed for coordination. The following circuit breaker information is required for a coordination study:

(1) Circuit breaker continuous current and frame rating.

(2) Circuit breaker interrupting rating.

(3) Circuit breaker time-current characteristic curves.

e. Circuit breaker ratings. Standard voltage and current ratings for circuit breakers may be found in appendix D. To meet UL requirements, molded case circuit breakers are designed, built and calibrated for use in a 40 degrees C (104 degrees F) ambient temperature. Time-current characteristic trip curves are drawn from actual test data. When applied at ambient temperatures other than 40 degrees C, frequencies other than 60 Hz, or other extreme conditions, the circuit performance characteristics of the breaker may be affected. In these cases, the current carrying capacity and/or trip characteristics of the breaker may vary. Therefore, the breaker must be rerated.

(1) Since thermal-magnetic circuit breakers are temperature sensitive devices, their rated continuous current carrying capacity is based on a UL specified 40 degrees C (104 degrees F) calibration temperature. When applied at temperatures other than 40 degrees C it is necessary to determine the breaker's actual current carrying capacity under those conditions. By properly applying manufacturer' s ambient rerating curves, a circuit breaker’s current carrying capacity at various temperatures can be predicted.

(2) Application of thermal-magnetic circuit breakers at frequencies above 60 Hz requires that special consideration be given to the effects of high frequency on the circuit breaker characteristics. Thermal and magnetic operation must be treated separately.

(a) At frequencies below 60 Hz the thermal rerating of thermal-magnetic circuit breakers is negligible. However, at frequencies above 60 Hz, thermal rerating may be required. One of the most common higher frequency applications is at 400 Hz. Manufacturer's rerating curves are available.

(b) At frequencies above 60 Hz, tests indicate that it takes more current to magnetically trip a circuit breaker than is required at 60 Hz. At frequencies above 60 Hz, the interrupting capacity of thermal-magnetic breakers is less than the 60 Hz interrupting capacity.

(3) When applying thermal-magnetic circuit breakers at high altitudes, both current and voltage adjustments are required. Current rerating is required because of the reduced cooling effects of the thinner air present in high altitude applications. Voltage rerating is necessary because of the reduced dielectric strength of the air. Refer to ANSI C37-13 and ANSI C37-14 for specific rerating factors to be applied at various altitudes.

(4) Trip curves provide complete time-current characteristics of circuit breakers when applied on an ac systems only. When applying thermal-magnetic circuit breakers on dc systems, the circuit breaker's thermal characteristics normally remain unchanged, but the manufacturer should be consulted to be certain. The magnetic portion of the curve, on the other hand, requires a multiplier to determine an equivalent dc trip range. This is necessary because time-current curves are drawn using RMS values of ac current, while dc current is measured in peak amperes. Additionally, the X/R ratio of the system as seen by the circuit breaker will affect its dc rating. When a circuit breaker opens a dc circuit, the inductance in the system will try to make the current continue to flow across the open circuit breaker contacts. This action results in the circuit breaker having to be derated. Furthermore, some circuit breakers require the ac waveform to pass through a current zero to open the circuit. Since dc does not have current zeros, the circuit breaker must be derated. For dc applications the manufacturer should be contacted for derating requirements.

f. System X/R ratio. Normally, the system X/R ratio need not be considered when applying circuit

breakers. Circuit breakers are tested to cover most applications. There are several specific applications, however, where high system X/R ratios may push short-circuit currents to 80 percent of the short-circuit current rating of standard circuit breakers. These applications are listed below.

(1) Local generation greater than 500kVA at circuit breaker voltage.

(2) Dry-type transformers, 1.0 MVA and above.

(3) All transformer types, 2.5 MVA and above.

(4) Network systems.

(5) Transformers with impedances greater than values listed in the ANSI C57 series.

(6) Current-limiting reactors in source circuits at circuit breaker voltage.

(7) Current-limiting busway in source circuits at circuit breaker voltage.

If the system X/R ratio is known, multiplying factors from various references can be used to determine the circuit breaker short-circuit current rating. If the system X/R ratio is unknown, the maximum X/R ratio of 20 may be assumed and the appropriate multiplying factor used.

g. Circuit breaker application. Molded-case circuit breakers, power circuit breakers, and insulated-case circuit breakers should be applied as follows:

(1) Molded-case circuit breakers have traditionally been used in panelboards or loadcenters where they were fixed-mounted and accessible. Low-voltage power circuit breakers, on the other hand, were traditionally used in industrial plants and installed in metal-enclosed assemblies. All power circuit breakers are now of the drawout-type construction, mounted in metalclad switch-gear. Therefore, molded-case breakers should be used in fixed mountings, and power breakers should be used where drawout mountings are employed.

(2) Since power breakers were traditionally used in metal-enclosed assemblies, they were rated for 100 percent continuous duty within the assembly. On the other hand, molded case breakers were traditionally used in open air. When used in a metal enclosure, molded-case breakers had to be derated to 80 percent of continuous rating. Molded-case breakers are now available at 100 percent rating when installed in an enclosure.

(3) Power breakers have traditionally been applied where selectivity was very important, thus requiring high short-time ratings to allow downstream devices to clear the fault. Molded-case breakers were, instead, designed for very fast operations. Fast opening contacts under high short-circuit current conditions resulted in molded-case breakers having higher interrupting ratings than power breakers.

(4) An insulated-case circuit breaker is somewhat of a hybrid circuit breaker which incorporates advantages of both the molded-case and power circuit breaker. However, an insulated-case breaker is not a power breaker, and should not be applied as such. Insulated-case breakers are not designed and tested to the same standards as power breakers. An insulated-case breaker is essentially a higher capability molded-case breaker. All commercially available insulated-case breakers are 100 percent rated.

(5) Molded-case or insulated-case breakers should be used in noncritical, small load applications with high interrupting requirements. Power breakers should be used in critical applications where continuity of service is a requirement. For overlapping applications, designer judgment should be based on factors discussed in this TM. Refer to table 3-3 * for circuit breaker application comparisons.

Table 3-3. Circuit breaker application comparisons

	Low voltage power circuit breaker	*Molded-case circuit breaker*
Critical loads	X	
Noncritical loads		X
Selectivity critical	X	
Selectivity not critical		X
Repetitive duty	X	
Nonrepetitive duty		X
Extended life critical	X	
Extended life not critical		X
Interrupting rating at 480 V		
Up to 65kA without fuses	X	X
Up to 150kA without fuses		X
Up to 200kA with integral fuses.	X	
Systems with large X/R ratio	X	
High short-time capability	X	
High current inrush applications.	X	

3-6. Protective relays

Protective relays are classified according to their function, and there are a wide variety of protective relays available. The overcurrent relay, for example, monitors current and operates when the current magnitude exceeds a preset value.

*Adapted from Application Considerations from Circuit Breakers-Choosing the Right Type for Specific Applications by S.H. Telander, Consulting-Specifying Engineer Magazine, July, 1987.

a. Overcurrent relay. The most common relay for short-circuit protection is the overcurrent relay. These relays are much more sophisticated than the simple thermal overload relays discussed previously for motor applications, and have a wide range of adjustments available. Electromagnetic attraction relays may be ac or dc devices and are used for instantaneous tripping. Electromagnetic induction relays are ac only devices. Electromagnetic attraction and induction relays, like all electromechanical devices, are simple, rugged, reliable, and have been used successfully for years. However, solid-state electronic relays are rapidly replacing the electromechanical types. Solid-state relays require less panel space and exhibit better dynamic performance and seismic-withstand capability. Additionally, solid-state overcurrent relays are faster, have more precisely-defined operating characteristics, and exhibit no significant overtravel. As in the case of circuit breakers, electromechanical relays will continue to find applications in harsh environments. Overcurrent relays have a variety of tap and time dial settings. Typical relay ratings are shown in appendix D, and typical over-current relay time-current characteristic curves are shown in appendix C.

b. Relay device function numbers. Protective relays have been assigned function numbers by IEEE that are used extensively to specify protective relays. A partial list of relay function numbers is included in appendix E.

c. Instrument transformers. Protective relays will always be associated with medium-voltage and high-voltage circuits, involving large current magnitudes. Therefore, current transformers (CT) are required to isolate the relay from line voltages and to transform the line current to a level matching the relay rating. CTs are normally rated 5A on the secondary with a primary rating corresponding to the requirements of the system. Potential or voltage transformers (VT) are single-phase devices, usually rated 120V on the secondary with primary rating matched to the system voltage.

(1) CT burden is the load connected to the secondary terminals. Burden may be expressed as volt-amperes and power factor at a specified current, or it may be expressed as impedance. The burden differentiates the CT load from the primary circuit load.

(2) Residually-connected CTs and core-balanced CTs are illustrated in chapter 5. Residually-connected CTs are widely used in medium-voltage systems, while core-balanced CT's form the basis of several low-voltage ground-fault protective schemes. Relays connected to core-balance CTs can be made very sensitive. However, core-balanced CTs are subject to saturation from unbalanced inrush currents or through faults not involving ground. High magnitude short-circuit currents may also saturate core-balance CTs thus preventing relay operation.

d. EMI/RFI With today's increasing use of sensitive, solid-state devices, the effects of Electro-Magnetic Interference (EMI) and Radio-Frequency Interference (RFI) must be considered. Solid-state devices, due to their many advantages, are rapidly replacing the rugged electromechanical devices previously used. One disadvantage of solid-state devices, however, is their sensitivity to power source anomalies and electrostatic and electromagnetic fields. Recent developments in the design and packaging of solid-state devices have incorporated effective shielding techniques. However, the designer must still evaluate the environment and ensure that additional shielding is not required. Equipment and devices must comply with MIL-STD-461.

e. New developments. Microprocessor-based relays are also becoming available which provide multiple relay functions as well as metering, fault event recording, and self-testing in a single enclosure. This system requires fewer connections and less panel space than individual relays and associated peripherals.

3-7 Automatic reclosing devices

Automatic reclosing schemes should not be applied where the load being protected is a transformer or cable, since faults in these types of loads are usually not transient in nature. Automatic reclosing schemes applied to permanent faults in transformer or cable loads may result in equipment damage and personnel hazards. Additionally, automatic reclosing schemes should be guarded against in motor circuits. If the system voltage is restored out of phase, the motor windings, shaft, and drive couplings may be damaged. Furthermore, reclosers should be applied only on aerial distribution systems.

CHAPTER 4

PROTECTIVE DEVICES COORDINATION

4-1. General

Where there are two or more series protective devices between the fault point and the power supply, these devices must be coordinated to insure that the device nearest the fault point will operate first. The other upstream devices must be designed to operate in sequence to provide back-up protection, if any device fails to respond. This is called selective coordination. To meet this requirement, protective devices must be rated or set to operate on minimum overcurrent, in minimum time, and still be selective with other devices on the system. When the above objectives are fulfilled, maximum protection to equipment, production, and personnel will be accomplished. As will be seen later in this chapter, protection and coordination are often in direct opposition with each other. Protection may have to be sacrificed for coordination, and vice versa. It is the responsibility of the electrical engineer to design for optimum coordination and protection. This is sometimes more art than science.

4-2. The coordination study

A coordination study consists of the selection or setting of all series protective devices from the load upstream to the power supply. In selecting or setting these protective devices, a comparison is made of the operating times of all the devices in response to various levels of overcurrent. The objective, of course, is to design a selectively coordinated electrical power system. A new or revised coordination study should be made when the available short-circuit current from the power supply is increased; when new large loads are added or existing equipment is replaced with larger equipment; when a fault shuts down a large part of the system; or when protective devices are upgraded.

a. Time-current characteristic curves. Time is plotted on the vertical axis and current is plotted on the horizontal axis of all time-current characteristic curves. Log-log type graph paper is used to cover a wide range of times and currents. Characteristic curves are arranged so that the area below and to the left of the curves indicate points of "no operation," and the area above and to the right of the curves indicate points of "operation." The procedure involved in applying characteristic curves to a coordination study is to select or set the various protective devices so that the characteristic curves of series devices from the load to the source are located on a composite time-current graph from left to right with no overlapping of curves. The result is a set of coordinated curves on one composite time-current graph.

b. Data required for the coordination study. The following data is required for a coordination study.

(1) Single-line diagram of the system under study.

(2) System voltage levels.

(3) Incoming power supply data.

(a) Impedance and MVA data.

(b) X/R ratio.

(c) Existing protection including relay device numbers and settings, CT ratios, and time-current characteristic curves.

(d) Generator ratings and impedance data.

(e) Transformer ratings and impedance data.

(4) Data on system under study.

(a) Transformer ratings and impedance data.

(b) Motor ratings and impedance data.

(c) Protective devices ratings including momentary and interrupting duty as applicable.

(d) Time-current characteristic curves for protective devices.

(e) CT ratios, excitation curves, and winding resistance.

(f) Thermal (I^2t) curves for cables and rotating machines.

(g) Conductor sizes and approximate lengths.

(5) Short-circuit and load current data.

(a) Maximum and minimum momentary (first cycle) short-circuit currents at major buses.

(b) Maximum and minimum interrupting duty (5 cycles and above) short-circuit currents at major buses. The exact value of ground-fault current (especially arcing ground-fault current) is impossible to calculate. Methods are available for estimating ground-fault current. The application of NEMA damage curves for ground-fault current is illustrated in appendix G.

(c) Estimated maximum and minimum arcing and bolted ground-fault currents at major buses.

(d) Maximum load currents.

(e) Motor starting currents and starting times.

(f) Transformer protection points.

c. Coordination procedure. The following procedure should be followed when conducting a coordination study:

(1) Select a convenient voltage base and convert all ampere values to this common base. Normally, the lowest system voltage will be chosen, but this may not always be the case.

(2) Indicate short-circuit currents on the horizontal axis of the log-log graph.

(3) Indicate largest (or worst case) load ampaities on the horizontal axis. This is usually a motor and should include FLA and LRA values.

(4) Specify protection points. These include magnetizing inrush point and NFPA 70 limits for certain large transformers.

(5) Indicate protective relay pick-up ranges.

(6) Starting with the largest (or worst case) load at the lowest voltage level, plot the curve for this device on the extreme left side of the log-log graph. Although the maximum short-circuit current on the system will establish the upper limit of curves plotted to the right of the first and succeeding devices, the number of curves plotted on a single sheet should be limited to about five to avoid confusion.

(7) Using the overlay principle, trace the curves for all protective devices on a composite graph, selecting ratings or settings that will provide overcurrent protection and ensure no overlapping of curves.

d. Coordination time intervals. * When plotting coordination curves, certain time intervals must be maintained between the curves of various protective devices in order to ensure correct sequential operation of the devices. These intervals are required because relays have overtravel and curve tolerances, certain fuses have damage characteristics, and circuit breakers have certain speeds of operation. Sometimes these intervals are called margins.

(1) Coordination can be easily achieved with low voltage current-limiting fuses that have fast response times. Manufacturer's time current curves and selectivity ratio guides are used for both overload and short-circuit conditions, precluding the need for calculating time intervals.

(2) When coordinating inverse time overcurrent relays, the time interval is usually 0.3-0.4 seconds. This interval is measured between relays in series either at the instantaneous setting of the load side feeder circuit breaker relay or the maximum short-circuit current, which can flow through both devices simultaneously, whichever is the lower value of current. The interval consists of the following components:

(a) Circuit breaker opening time (5 cycles).	0.08 seconds
(b) Relay overtravel	0.10 seconds
(c) Safety factor for CT saturation, setting errors, contact gap, etc.	0.22 seconds

(3) This safety factor may be decreased by field testing relays to eliminate setting errors. This involves calibrating the relays to the coordination curves and adjusting time dials to achieve specific operating times. A 0.355 margin is widely used in field-tested systems employing very inverse and extremely inverse time overcurrent relays.

(4) When solid-state relays are used, overtravel is eliminated and the time may be reduced by the amount included for overtravel. For systems using induction disk relays, a decrease of the time interval may be made by employing an overcurrent relay with a special high-dropout instantaneous element set at approximately the same pickup as the time element with its contact wired in series with the main relay contact. This eliminates over-travel in the relay so equipped. The time interval often used on carefully calibrated systems with high-dropout instantaneous relays is 0.25 seconds.

(5) When coordinating relays with downstream fuses, the circuit opening time does not exist for the fuse and the interval may be reduced accordingly. The total clearing time of the fuse should be used for coordination purposes. The time margin between the fuse total clearing curve and the upstream relay curve could be as low as 0.1 second where clearing times below 1 second are involved.

(6) When low-voltage circuit breakers equipped with direct-acting trip units are coordinated with relayed circuit breakers, the coordination time interval is usually regarded as 0.3 seconds. This interval may be decreased to a shorter time as explained previously for relay-to-relay coordination.

(7) When coordinating circuit breakers equipped with direct-acting trip units, the characteristics curves should not overlap. In general only

---

* Reprinted with permission from ANSI/IEEE Standard 242-1986, IEEE Recommended Practice for Protection and Coordination of Industrial and Commercial Power Systems, copyright 1986 by IEEE.

a slight separation is planned between the different characteristics curves. This lack of a specified time margin is explained by the incorporation of all the variables plus the circuit breaker operating times for these devices within the band of the device characteristic curve.

(8) Delta-wye transformers. When protecting a delta-wye transformer, an additional 16 percent current margin over margins mentioned previously should be used between the primary and secondary protective device characteristic curves. This helps maintain selectivity for secondary phase-to-phase faults since the per-unit primary current in one phase for this type of fault is 16 percent greater than the per-unit secondary current which flows for a secondary three-phase fault.

4-3. Primary and medium-voltage coordination

Figure 4-1 shows a single-line diagram (modified for simplicity) of the electrical distribution system at an Army Ammunition Plant. Two 115kV utility lines supply the double-ended, main substation, which transforms the voltage down to 13.8kV for distribution throughout the facility. The utility company should participate in the selection of relay protection for the incoming 115kV lines in the event of a fault in the 115kV bus or the main transformers. The 15kV switchgear is designed primarily for supplying the 480V substations, although medium and large-size motors could also be served. Primary and medium-voltage protection is covered in detail by the coordination examples in appendix G.

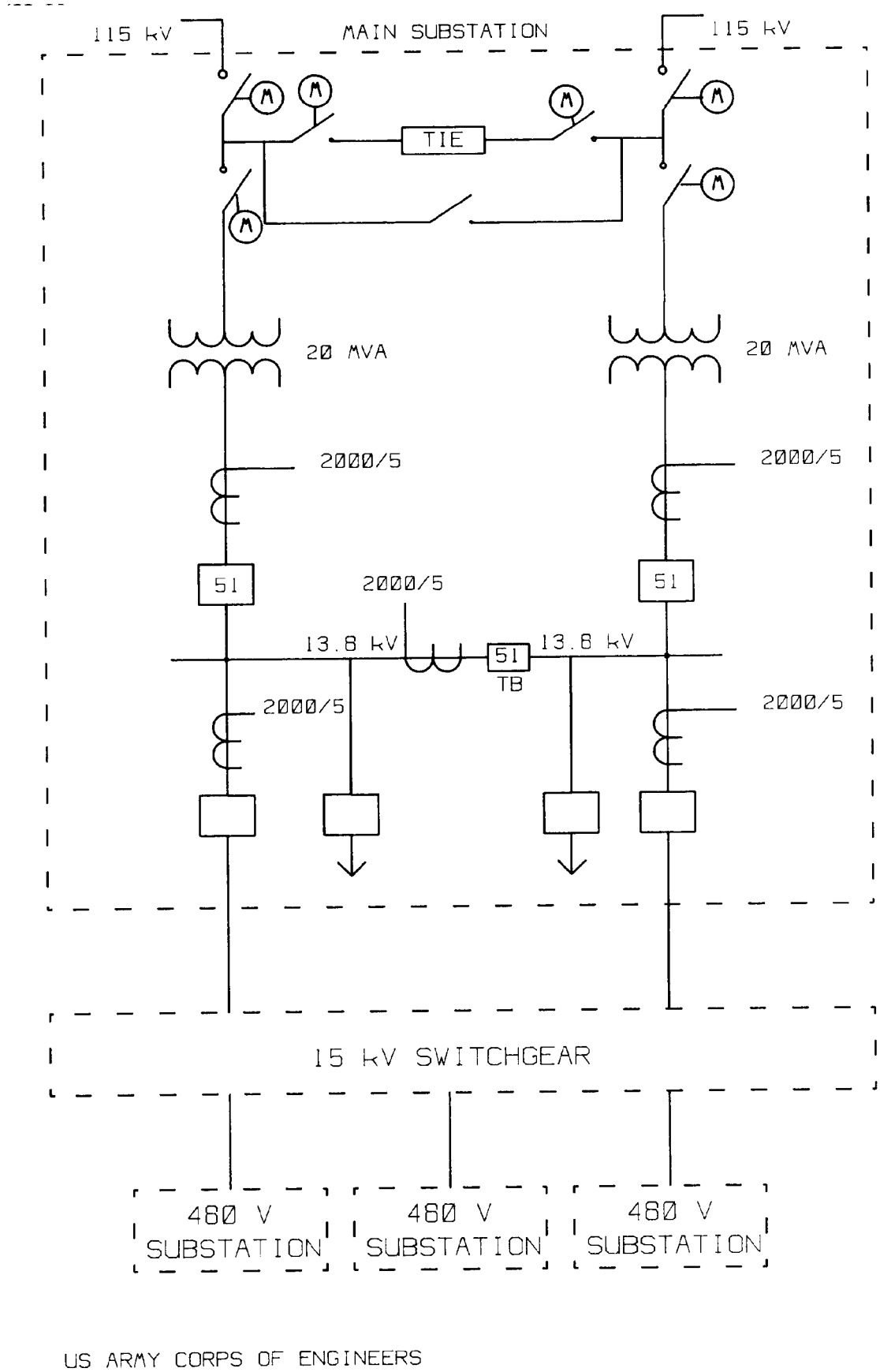

Figure 4-1. Army ammunition plant single-line diagram.

4-4. Low-voltage coordination

Low-voltage coordination involves selecting feeder-breaker, tie-breaker, main-breaker, and transformer fuse ratings and settings that provide optimum protection of equipment while maintaining selective coordination among the low-voltage, protective devices. Total system coordination with upstream medium-voltage and primary protective devices must also be incorporated. Low-voltage protection is covered in detail by the coordination examples in appendix G.

4-5. Ground-fault coordination

Most of the concern about ground-fault protection and coordination, today, centers on low-voltage systems where low-level arcing faults are a considerable problem. The phenomena of arcing faults began in the 1950's with the advent of large capacity 480Y/277V solidly-grounded systems. Medium- and high-voltage grounded systems don't experience the arcing ground fault problem common to low-voltage systems, and have employed ground current relays for years. Currently, there are three methods for achieving low-voltage arcing ground-fault protection.

a. Method 1. The non-selective, single-zone method, shown in figure 4-2a, applies ground-fault protection only at the main service disconnect. This is minimum protection as required by NFPA 70, and is required only on 480Y/277V services rated 1000A or more. Non-selective, single-zone ground-fault protection may be difficult to coordinate with downstream standard overcurrent de- vices, and additional ground-fault protection at downstream levels may have to be considered even though not required by NFPA 70.

b. Method 2. The selective, time-coordinated method, shown in figure 4-2b, applies ground-fault protection at additional levels downstream of the main service disconnect. Coordination is achieved by intentional time-delays to separate the various levels. This method achieves the coordination that Method 1 does not, but protection is sacrificed by inclusion of the time-delays. Additionally, Method 2 costs more than Method 1.

c. Method 3. The selective, zone-coordinated method, shown in figure 4-2c, applies ground-fault protection at downstream levels like Method 2 does, but includes a restraining signal which can override the time-delay. Coordination and protection are both maximized by the application of this system of restraining signals by allowing each level to communicate with other levels. This method, of course, costs more than the other methods, and should be considered only for special purpose applications.

d. Government facilities. Except for special installations requiring precise ground-fault protection and coordination, government facilities should incorporate ground-fault protection in accordance with NFPA 70 only. Where coordination is not possible with downstream feeders, main GFP devices and feeder protective devices should he set to optimize coordination as much as possible.

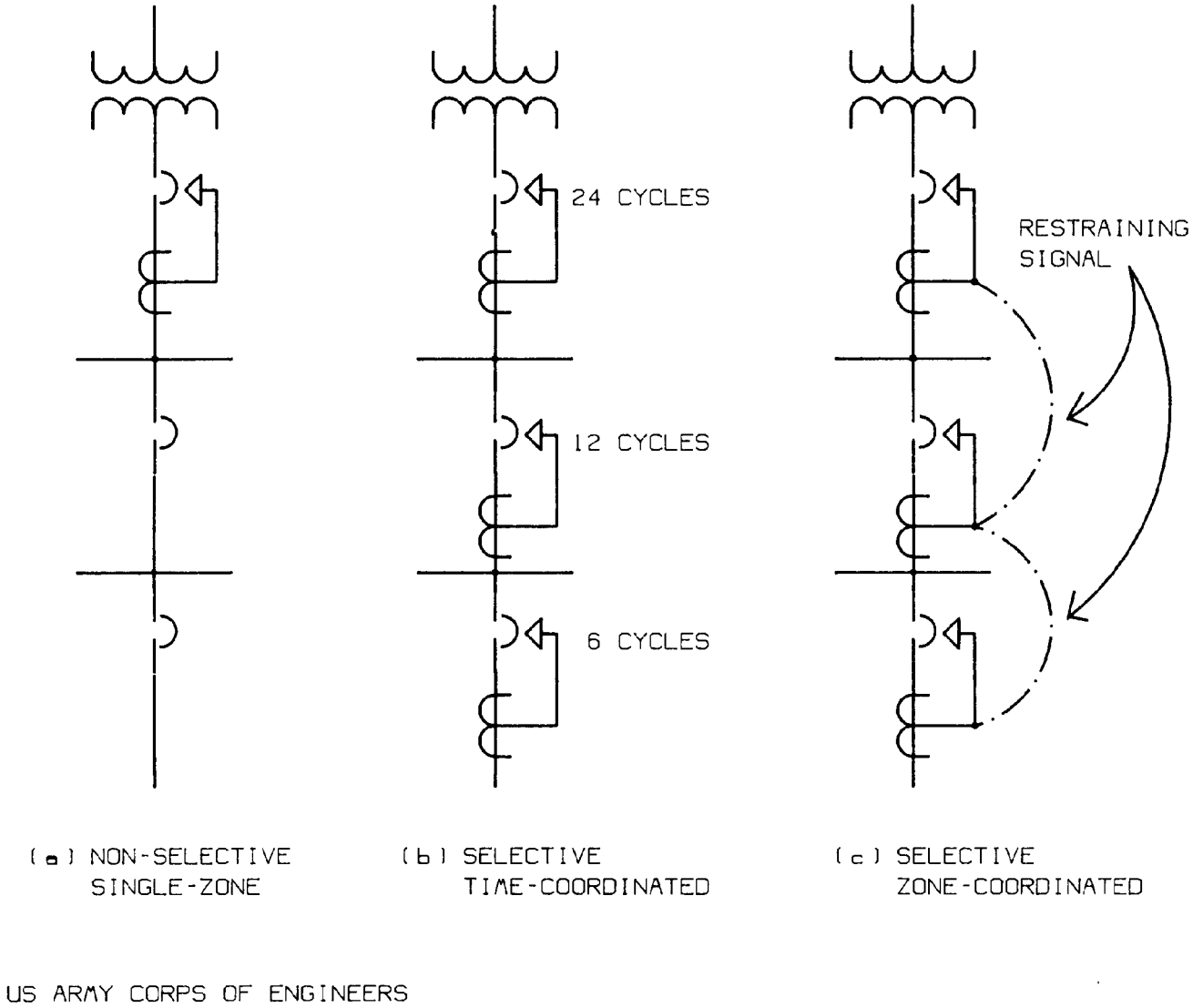

Figure 4-2. Ground-fault protection.

4-6. Coordination requirements

The primary purpose of the coordination procedure is to select the proper ratings and settings for the protective devices on an electrical distribution system. These ratings and settings should be selected so that pick-up currents and time delays allow the system to ignore transient overloads, but operate the protective device closest to the fault when a fault does occur. Proper selection of ratings and settings of protective devices requires knowledge of NFPA 70 requirements for protection of motors, transformers, and cables as well as knowledge of ANSI C57.12 requirements for transformer withstand limits. Application of the protection requirements listed in this paragraph is covered in detail by the coordination examples in appendix G.

a. NFPA 70 transformer limits. NFPA 70 specifies the maximum overcurrent setting for transformer protective devices. Table 4-1 summarizes the NFPA 70 requirements for transformers over 600V. Fuse ratings are permitted to be lower than circuit breaker ratings due to the differences in operating characteristics in the overload region.

*Table 4-1. Maximum overcurrent protection (in percent) per NFPA 70**

Transformers with Primary and Secondary Protection					
Transformer Impedance	Primary		Secondary		
	Over 600V		Over 600V		600V or Below
	Circuit Breaker	Fuse	Circuit Breaker	Fuse	Circuit Breaker or Fuse
Less than or equal to .06 per unit	600	300	300	250	125**
Greater than .06 but less than or equal to .1 per unit	400	300	250	225	125**

*Reprinted with permission from NFPA 70–1990, *National Electrical Code,* Copyright, 1990, National Fire Protection Association, Quincy, MA. This reprinted material is not the complete and official position of the NFPA on the referenced subject which is represented only by the standard in its entirety.
**Supervised locations may be 250 percent.

b. ANSI C57.12 withstand point. At current levels greater than 600 percent of full-load, transformer withstand can be approximated by I^2t through-fault curves which have replaced the old, familiar ANSI C57.12 withstand point.

c. Magnetizing inrush. Transformer primary protective devices must be rated or set below the withstand limit but above the magnetizing- and load-inrush currents that occur during transformer energization. In-rush current magnitudes and durations vary among transformer manufacturers, but 8 to 12 times full-load current for 0.1 second are commonly used for coordination purposes.

4-7. Maintenance, testing, and calibration

Preventive maintenance should not be confused with breakdown maintenance, which is not maintenance at all, but is really repair. Preventive maintenance involves a scheduled program for cleaning, tightening, lubricating, inspecting, and testing devices and equipment. The purpose is to identify and correct problem areas before troubles arise. Maintenance, testing, and calibration procedures vary with the type of equipment, the environment, frequency of operation, and other factors. While procedures may vary, certain initial field tests and inspection areas should always be addressed. Control power and control circuits should be tested for correct operation. Protective devices should be inspected, calibrated, and proper settings incorporated. Grounding connections should be verified, instrument transformers should be tested for proper polarity and operation, and ground-fault protection systems should be performance tested.

4-8. Example of phase coordination

This paragraph, in conjunction with the referenced figures, outlines a step-by-step procedure for conducting a phase coordination study. The example includes primary protection (34.5kV), medium-voltage protection (13.8kV), low-voltage overcurrent protection (480V), and low-voltage ground-fault protection. The procedures developed in this example may be applied to any electrical distribution system regardless of the complexity or simplicity. Although both manual and computer plotting procedures are described, computer plotting was used to develop the time current curves in this TM. The use of a computer coordination plotting program will make the coordination procedure more accurate and less time consuming, and is recommended. Short-circuit current calculating procedures are not covered.

a. Single-line diagram. Draw the single-line diagram of the system under study. Include voltage levels, incoming power supply data, and other information as outlined in this chapter. Figure 4-3 shows the single-line diagram for the electrical system considered by this example.

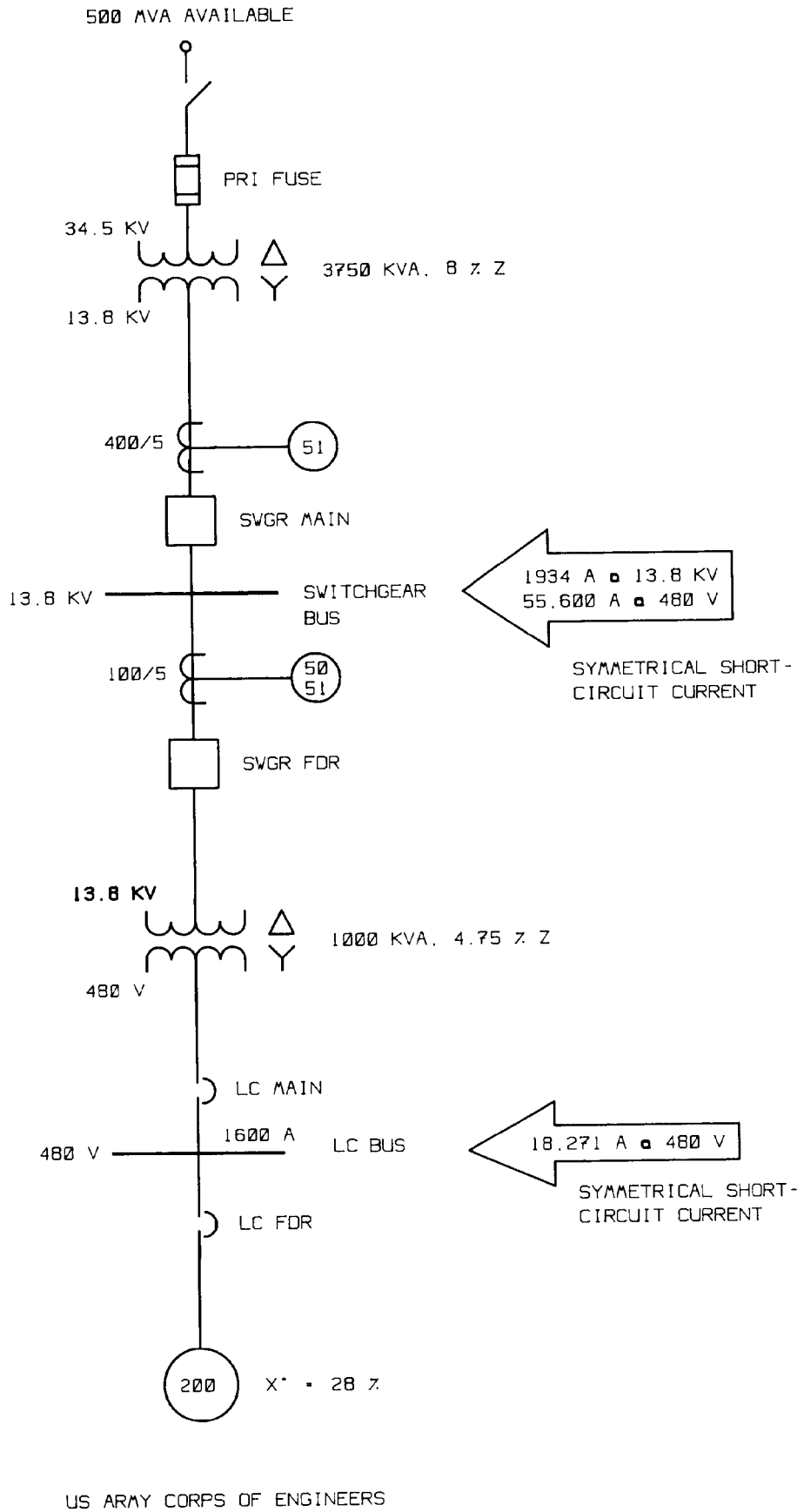

Figure 4-3. Single-line diagram.

b. Short-circuit and load currents. Short-circuit and load currents must be determined and included on the appropriate time-current coordination curves or entered into the computer plotting pro-gram.

(1) Assume that motor kVA is approximately equal to motor horsepower. This is a widely used and valid assumption for large motors. Also, for simplicity assume motor voltage is 480V, although it may actually be 460V. Motor examples using 460V ratings are covered in other examples. Calculate motor full load amperes (FLA) and motor locked-rotor amperes (LRA) as shown in equations 4-1, 4-2, and 4-3.

$$\text{Motor}_{FLA} = (\text{kVA})/(1.73)(\text{kV} = (200)/(1.73)(.480) = 241\text{A}. \quad \text{(eq 4–1)}$$

$$\text{Motor}_{LRA(SYM)} = (\text{FLA})/\text{Xd}'' = (241)/.28 = 861\text{A}. \quad \text{(eq 4–2)}$$

$$\text{Motor}_{LRA(ASYM)} = (\text{Motor}_{LRA(SYM)}) (1.6) = (861)(1.6) = 1378\text{A}. \quad \text{(eq 4–3)}$$

(2) Determine maximum and minimum short-circuit currents and express the currents on a common base voltage. The base voltage for this example was selected to be 480V. Symmetrical and asymetrical short-circuit current values were calculated to be

I_{sym} at LC Bus = 18,271A
I_{sym} at LC Bus = 27,691A
I_{sym} at SWGR Bus = 55,600A
I_{sym} at SWGR Bus = 88,960A

Asymmetrical current is important because all instantaneous devices see the asymmetrical current. If the coordination study is being completed manually, short-circuit current values are normally shown on the current axis to remind the designer about the short-circuit current limits. For computer plotting programs, short-circuit current values, along with other data, are entered directly into the computer. The computer keeps track of all current limits, thereby simplifying the coordination procedures.

(3) Select a convenient current scale that will permit about five devices to be shown on the time-current characteristic curve. Locate the load device (motor) as far to the left as possible. Plot the motor starting curve as illustrated in figure 4-4. The motor current at time zero is LRA(asym). At about 3 cycles, it changes to LRA(sym). The transition from LRA(sym) to FLA is assumed to be made at about 10 seconds, although the exact time will depend on the actual starting time of the motor used. For simplicity, only the LRA(asym) values will be shown on the time-current curves.

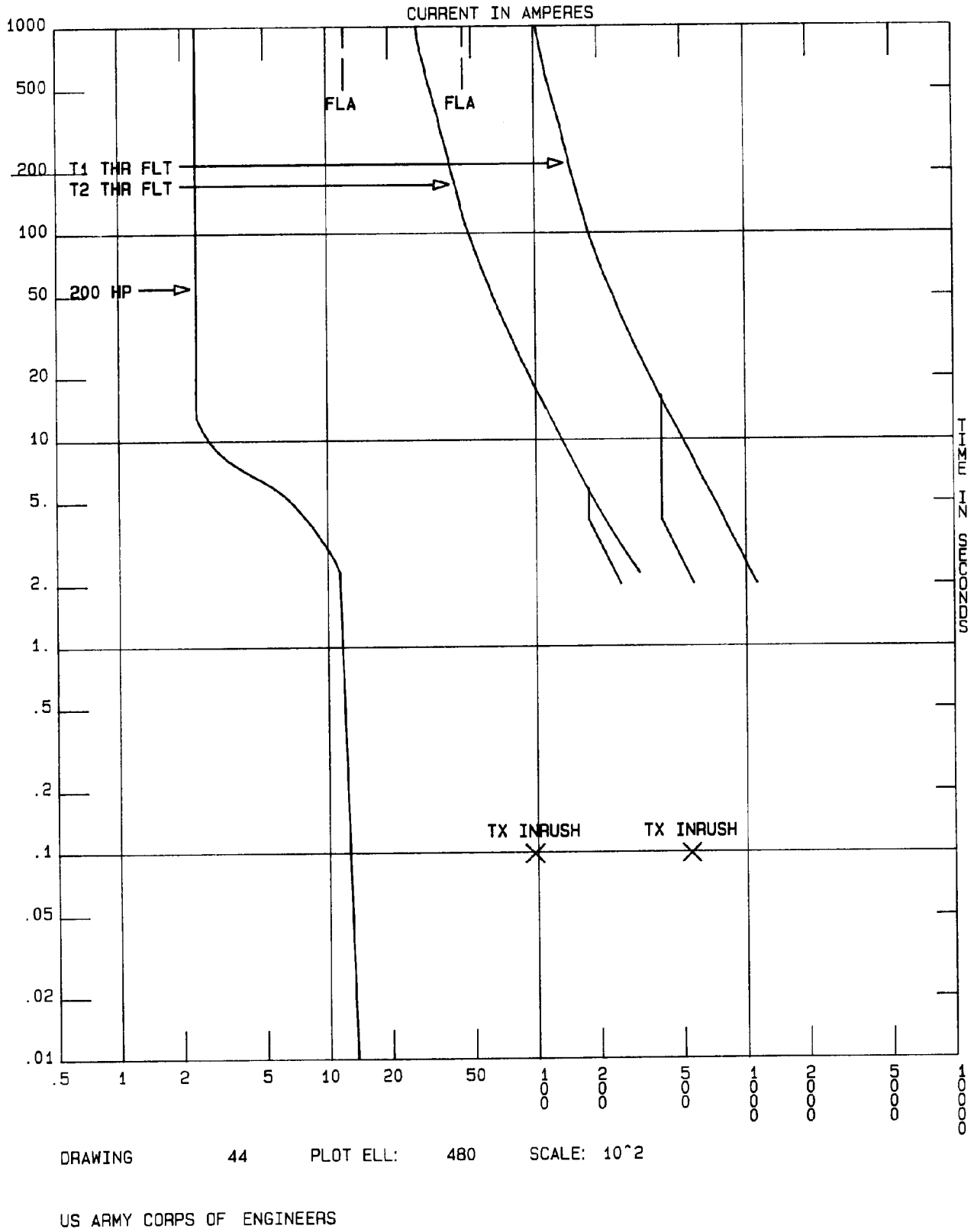

Figure 4-4. Key protection points.

c. Protection points. Determine NFPA 70 limits from table 4-1 and transformer inrush points for transformers T1 and T2. Equations 4-4 through 4-9 illustrate the required calculations.

(1) $T1_{FLA}=(kVA)/(1.73)(kV)=(3750)/(1.73)(.480)=4511A.$ (eq 4-4)

$T1_{3X}=(T1_{FLA})(3)=13{,}533A$ ..... (eq 4-5)

$T2_{FLA}=(kVA)/(1.73)(kV)=(1000)/(1.73)(.480)=1203A.$ (eq 4-6)

$T2_{6X}=(T2_{FLA})(6)=7218A.$ ..... (eq 4-7)

(2) $T1_{INRUSH}=(12)(T1_{FLA})=(12)(4511)=54{,}132A$ for 0.1 second. (eq 4-8)

$T2_{INRUSH}=(8)(T2_{FLA})=(8)(1203)=9624A$ for 0.1 second. (eq 4-9)

(3) Plot the transformer through-fault protection curves and inrush points on the time-current curves as shown in figure 4-4. Transformer primary protection should always be below the through-fault curve to protect the transformer, but above the inrush point to prevent operating the protective device when the transformer is energized. Long-time rating or setting of the transformer primary protective device should he above FLA but less than the NFPA 70 limit.

d. Load center (LC) feeder circuit breaker characteristics. For manual coordination, tape the time-current characteristic curve of the first upstream device (LC FDR) to a light table, and place figure 4-4 over this curve. Select the appropriate settings for the LC FDR circuit breaker by positioning the overlays and trace the resulting curve, as shown in figure 4-5. Although NFPA 70 will allow the LC FDR device to be set at 250 percent of FLA, or 600A, it is obvious from the characteristic curves that a lower setting, and thus better protection, can be used. Computer plotting programs allow the designer to interactively select, compare, and reselect (if necessary) curves of a wide range of protective devices. The settings shown below were selected for this example.

(1) Long-time pick-up=400A.

(2) Instantaneous pick-up=10X or 4000A. The instantaneous curve is truncated at the maximum short-circuit current seen at this point in the system (27,691A). The 10X value was selected because it is representative of commercially-available circuit breakers. As will be seen from the time-current curves, instantaneous and other settings are flexible and dependent upon many circuit variables.

(3) Separate overload protection not greater than 125 percent of motor nameplate amperes in accordance with NFPA 70.

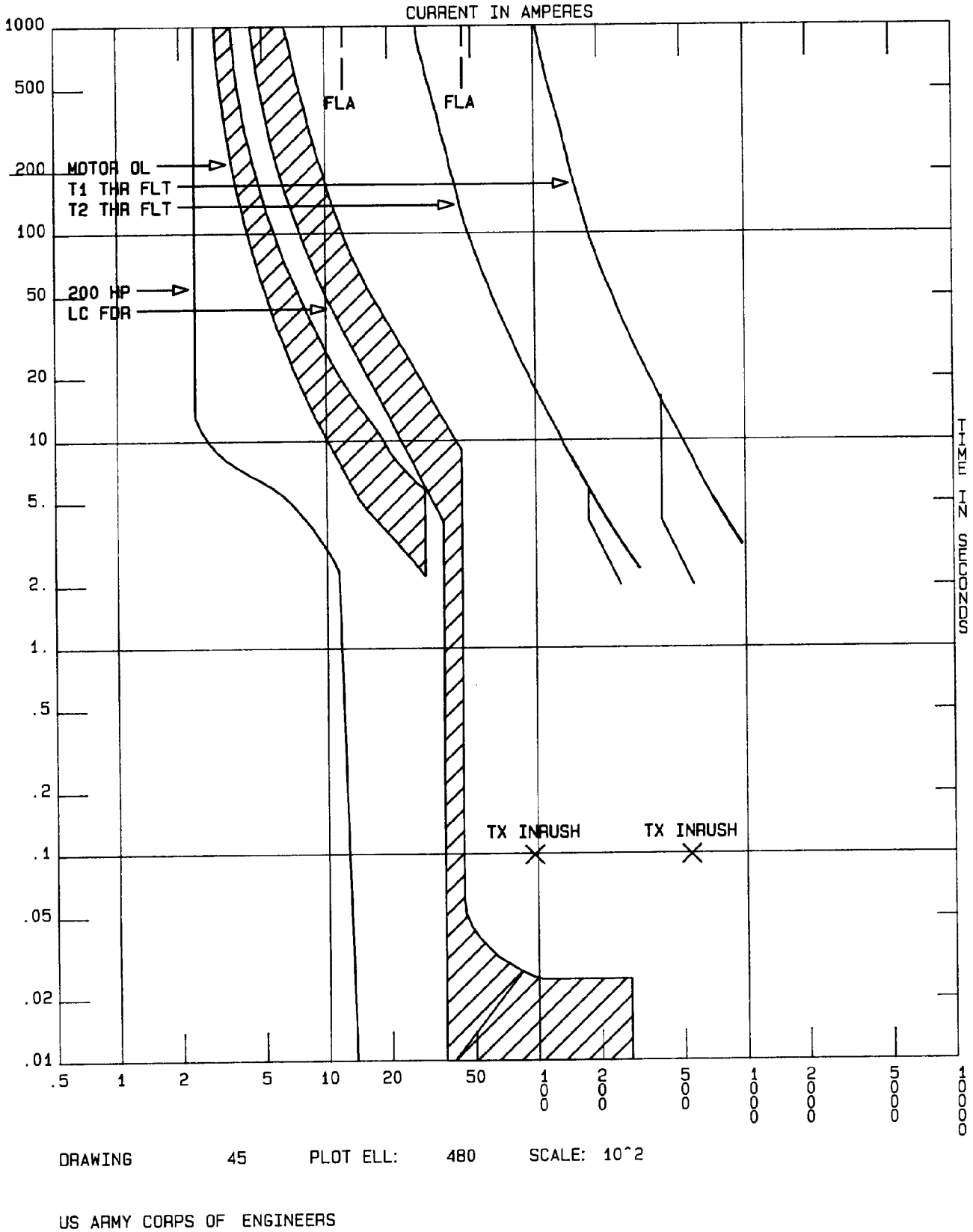

Figure 4-5. LC feeder protection.

e. LC MAIN circuit breaker characteristics. For manual coordination, tape the time-current characteristic curve of the next upstream device (LC MAIN) to the light table and place figure 4-5 over this curve. Select the appropriate settings for the LC MAIN as was done for the LC FDR. See figure 4-6. The long-time pick-up was set at 1600A to obtain full capacity from the 1600A LC bus. The LC MAIN can be set as high as 250 percent of the full-load amperes of T2 since T2 has both primary and secondary protection. See table 4-1. The following settings were selected for the Lc MAIN:

(1) Long-time pick-up = 1600A.

(2) Long-time delay=minimum.

(3) Short-time pick-up=7X or 11,200A

(4) Short-time delay=minimum. The short-time curve is truncated at the maximum short-circuit current seen at this point in the system (18,271A).

(5) Instantaneous pick-up=NONE, since it is impossible to coordinate the instantaneous curves for the two series devices, LC MAIN and LC FDR. If LC MAIN has an instantaneous element, it should be set high to coordinate with the LC FDR as much as possible.

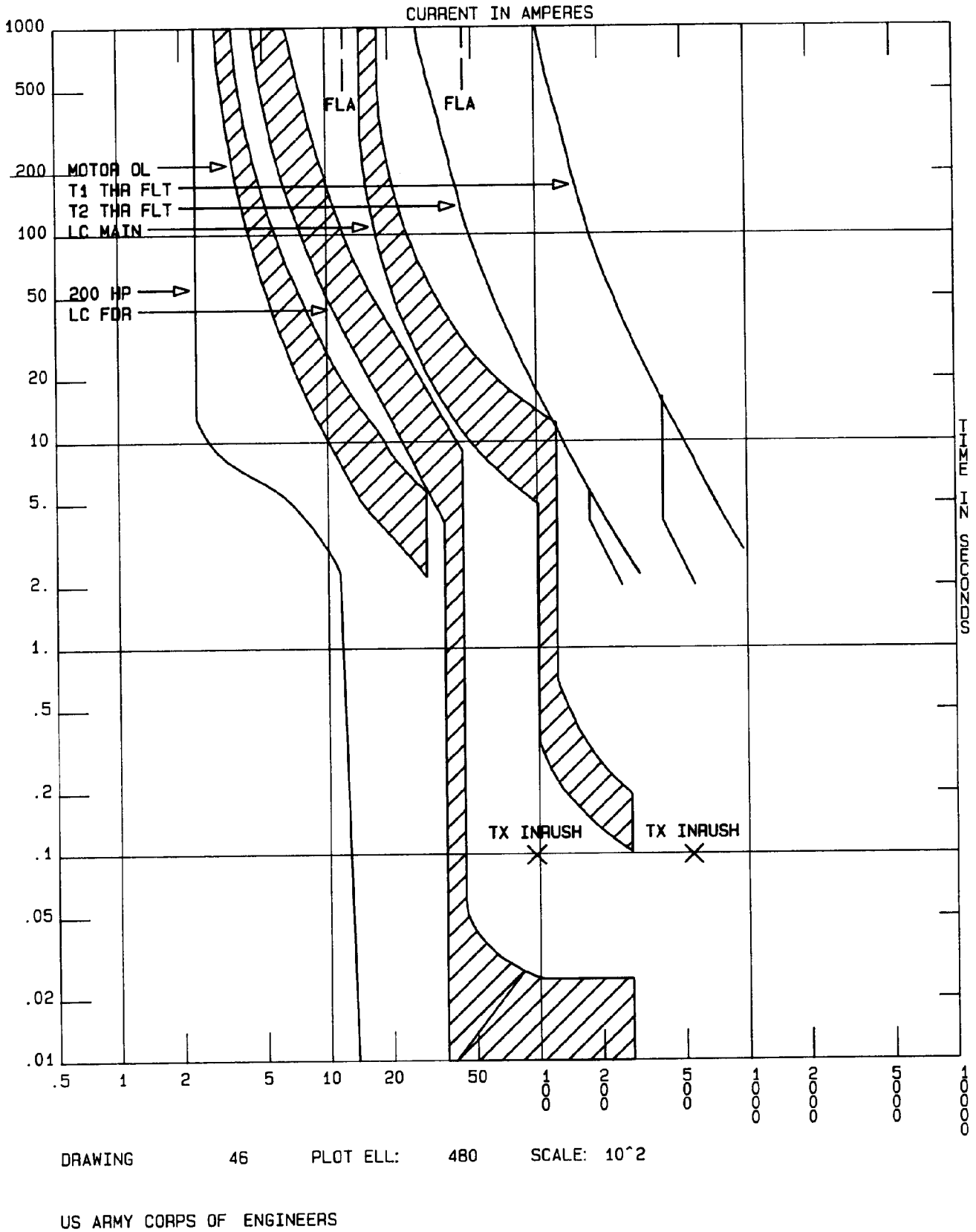

Figure 4-6. LC MAIN protection.

f. Switchgear feeder circuit breaker and relay characteristics. In this example, a 100/5A current transformer is used. On a 480V base a relay tap setting of lA will result in a primary current value of—

$$(1A)\frac{100A}{5A}\frac{13{,}800V}{480V}=(1A)(20)(28.75)=575A. \qquad \text{(eq 4-10)}$$

Other tap settings will result in the following primary currents:

$$(2A)(20)(28.75)=1150A \qquad \text{(eq 4-11)}$$
$$(3A)(20)(28.75)=1725A \qquad \text{(eq 4-12)}$$
$$(4A)(20)(28.75)=2300A \qquad \text{(eq 4-13)}$$
$$(5A)(20)(28.75)=2875A \qquad \text{(eq 4-14)}$$
$$(6A)(20)(28.75)=3450A \qquad \text{(eq 4-15)}$$
$$(7A)(20)(28.75)=4025A \qquad \text{(eq 4-16)}$$
$$(8A)(20)(28.75)=4600A \qquad \text{(eq 4-17)}$$
$$(9A)(20)(28.75)=5175A \qquad \text{(eq 4-18)}$$
$$(10A)(20)(28.75)=5750A \qquad \text{(eq 4-19)}$$
$$(12A)(20)(28.75)=6900A \qquad \text{(eq 4-20)}$$

....

The relay tap setting must be higher than the LC MAIN or 1600A, but less than the T2 NFPA 70 limit (6X), or 7200A. Sketch the usable tap settings (3A-12A) at the top of the time-current characteristic curve if the coordination study is being completed manually. Allowing an additional 16 percent current margin in addition to standard margins between the primary and secondary protective devices of the delta-wye transformer, select an appropriate pick-up (tap setting) for the SWGR FDR relay. Tape the time-current characteristic curve for the relay to the light table and place figure 4-6 over this curve as before. Line up the relay "1" vertical line with the selected tap setting previously sketched at the top of the curves. Select both tap and time-dial settings which result in the optimum protection and coordination. Remember that the relay curve must be below the T2 through-fault protection curve in addition to complying with the inrush point and NFPA 70 limits. For computer plotting programs each tap and time dial setting can be viewed on the CRT workstation screen and the optimum setting selected. The settings listed below and illustrated in figure 4-7 were selected for the SWGR FDR relay.

(1) Tap (pick-up)=8A.

(2) Time dial = 3.

(3) Instantaneous 60X or 34,500A on a 480V base, which is less than the symmetrical short-circuit current at the SWGR bus. Maximum short-circuit current seen by the instantaneous device will be I_{asym} or 88,960A. Asymmetrical current must be considered since all instantaneous devices will see asymmetrical current.

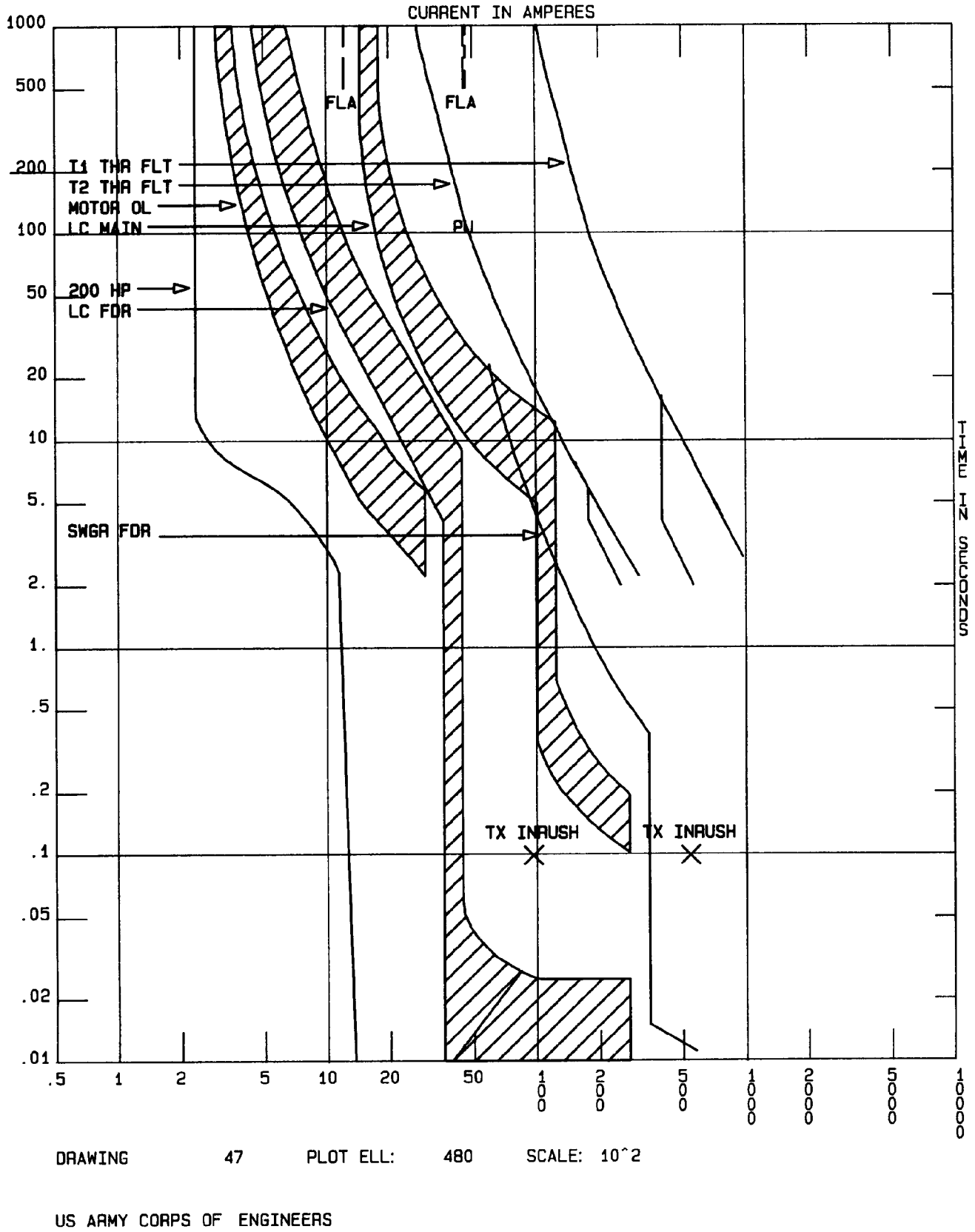

Figure 4-7. Switchgear feeder protection.

g. Switchgear main circuit breaker and relay characteristics. Allowing a convenient margin between the SWGR FDR and the SWGR MAIN, select appropriate tap and time dial settings for the SWGR MAIN relay. The following settings which are illustrated in figure 4-8 were selected:

(1) Tap (pick-up)=2.

(2) Time dial=6.

(3) Instantaneous=NONE, since instantaneous curves for the SWGR MAIN and SWGR FDR will not coordinate. Maximum short-circuit current seen at this point in the system will be I_{sym} or 55,600A.

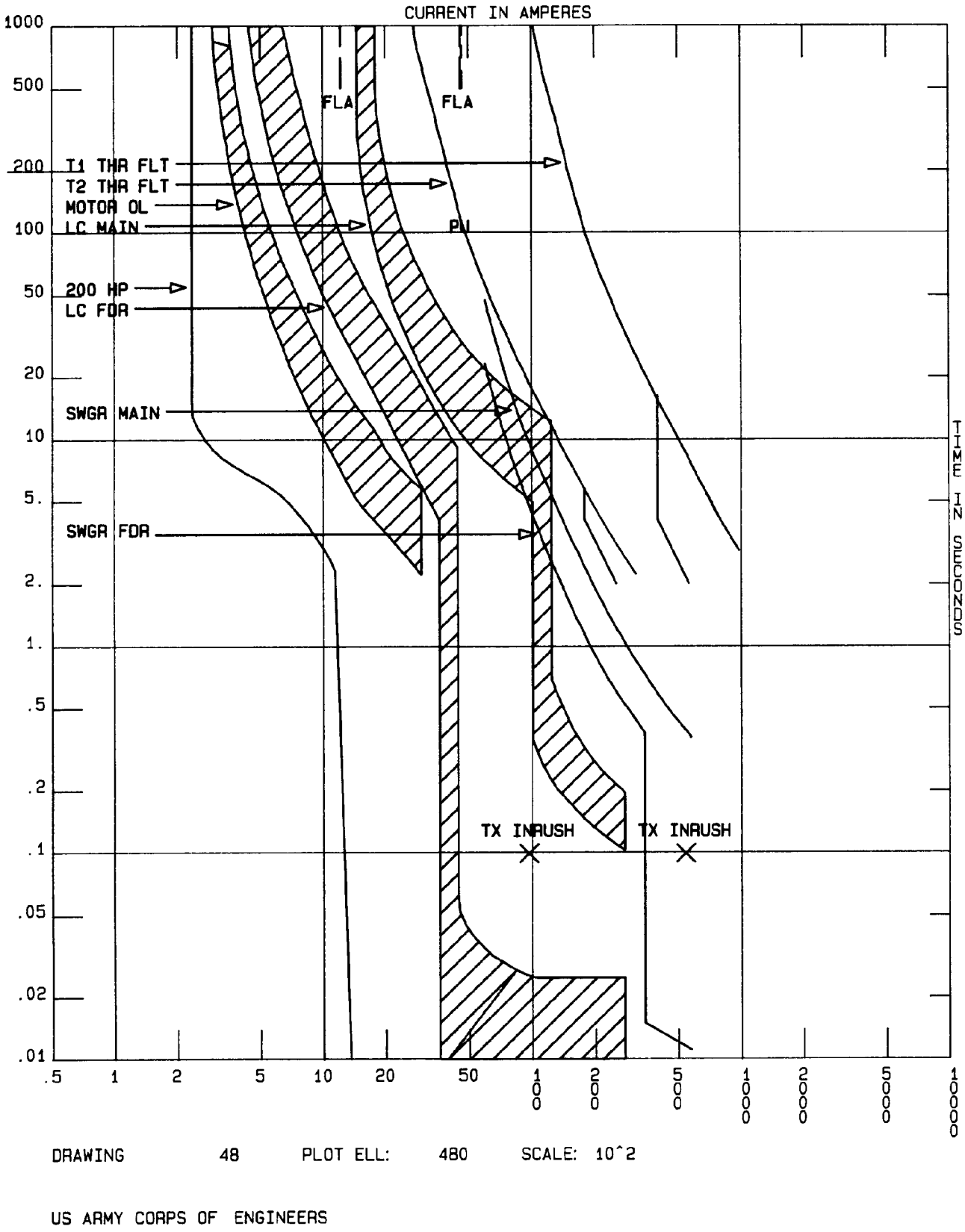

Figure 4-8. Switchgear main protection.

h. Primary fuse characteristics. Tape the characteristic curve of the primary fuse to the light table, place figure 4-8 over the curve, and sketch the fuse time-current curve. See figure 4-9. Although a standard speed, 100E fuse will protect the transformer, a slow speed, 100E fuse is selected to improve coordination with downstream de- vices.

I. Composite time-current curve. Figure 4-9 and table 4-2 show the completed, composite time-current characteristic curves for the electrical distribution system represented by this example. As you can see, protective devices coordination is often more art than science. There are no right or wrong settings, necessarily, within normal limits. There *are* optimum settings. As the system changes, through plant expansion or layaway, the settings may have to be changed. The coordination study is unique for each system, and must be a "fluid" document. That is, it changes as the electrical system itself changes. The time and current settings should be the minimum consistent with the system operating at its rating and maintaining selective coordination.

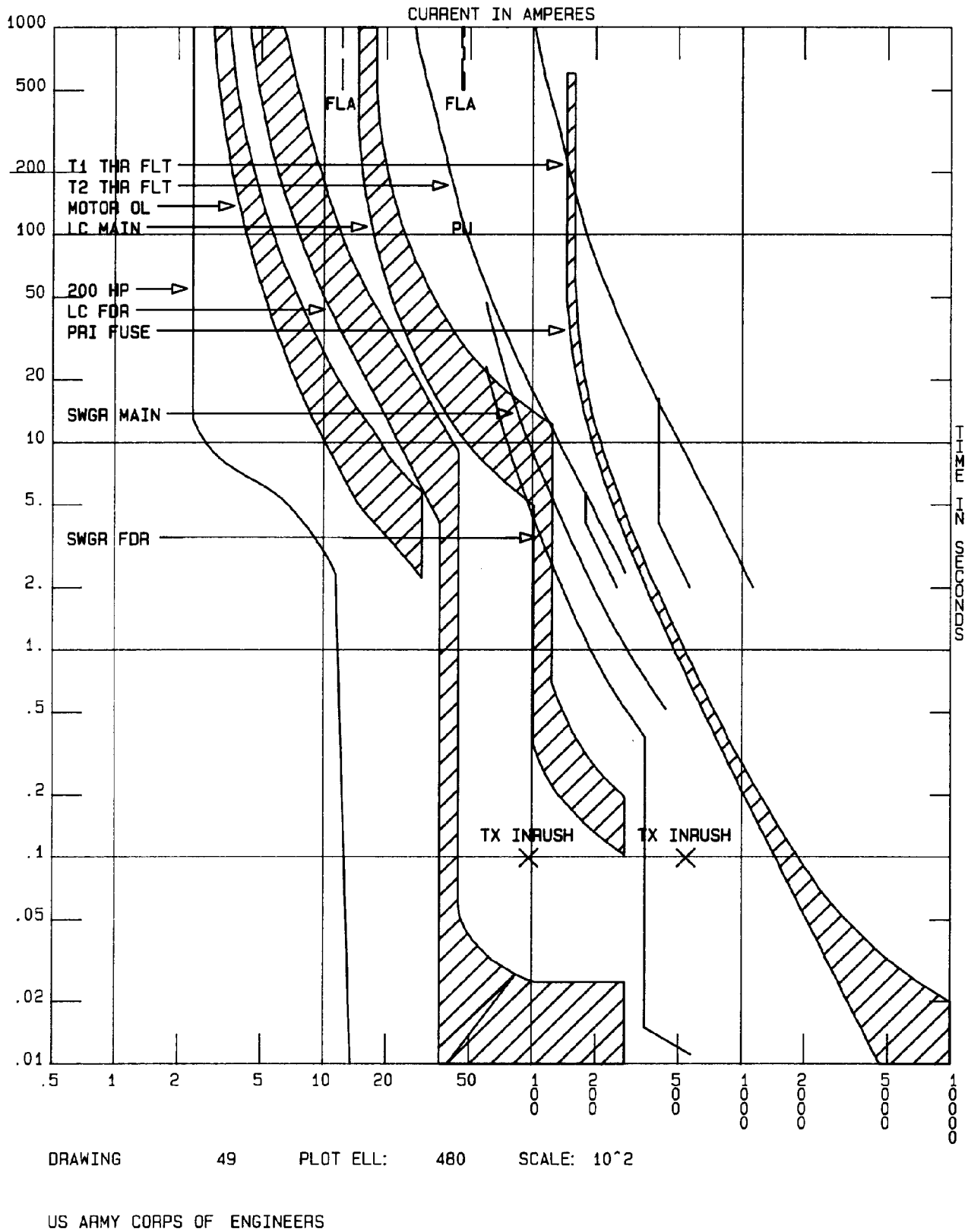

Figure 4-9. Composite time-current curve.

j. Coordination problems. Close examination of figure 4-9 reveals the following coordination problems:

(1) The SWGR FDR, which is also the primary protection for *transformer* T2, intersects with the T2 Thru-Fault curve. The settings for this device should he reduced while meeting the criteria in (a) and (b) below. The LC MAIN and IC FDR settings must also be reduced to maintain coordination.

(a) SWGR FDR relay curve is set above FLA and magnetizing inrush of T2.

(b) SWGR FDR relay curve is set below 6X FLA of T2 and below the T2 Thru-fault curve.

(2) The rating of the primary fuse should he reduced while meeting the criteria in (a) and (b) below. The setting of the SWGR MAIN may also have to be reduced or a different relay characteristic used to maintain coordination. In the final analysis, complete coordination may not be achievable. Figure 4-10 and table 4-8 illustrate improved coordination using reduced settings and solid state circuit breakers.

(a) Fuse curve is above FLA and magnetizing inrush of T1.

(b) Fuse curve is below 3X FLA of T1 and below the T1 Thru-Fault curve.

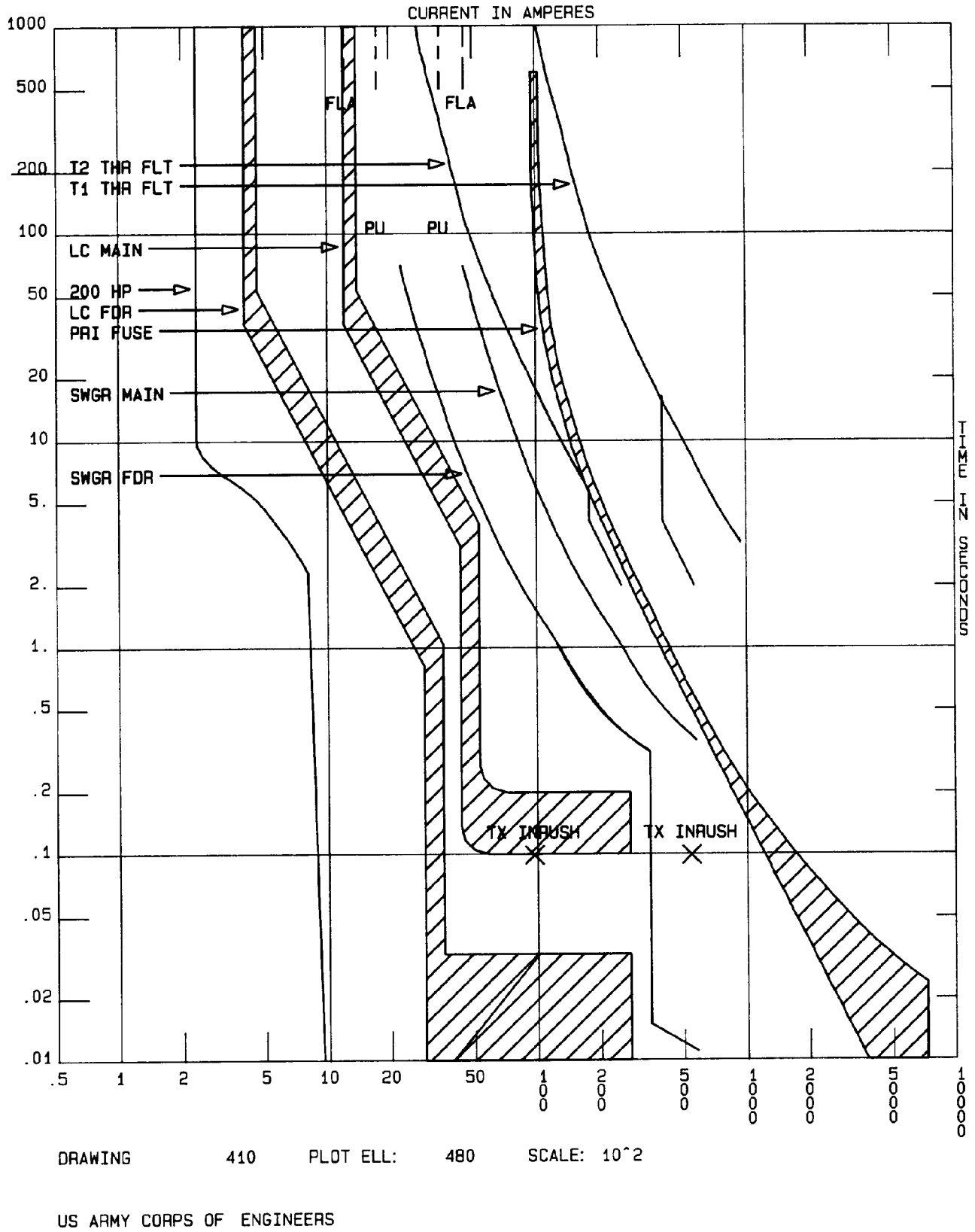

Figure 4-10. Composite time-current curve using solid-state devices.

Table 4-2. Summary of initial protective device settings

Device	ID	Setting
PRI FUSE	F1-1	100A SLOW (34.5kV)
SWGR MAIN	B3-1	Tap=2, TD=6 (400/5 CT)
SWGR FDR	B3-2	Tap=8, TD=3, INST=60 (100/5 CT)
LC MAIN	B5-1	LT=1600A, LTD=MIN, ST=7.0, STD=MIN
LC FDR	B5-2	400A, INST=10.0

Table 4-3. Summary of new settings using solid-state devices

Device	ID	Settings
PRI FUSE	F1-1	65A VERY SLOW (34.5kV)
SWGR MAIN	B3-1	Tap=1.5, TD=8 (400/5 CT)
SWGR FDR	B3-2	Tap=3, TD=8, INST=60 (100/5 CT)
LC MAIN	B5-1	LT=1200A, LTD=2.2 SEC, ST=4.0, STD=0.2 SEC

Table 4-3. Summary of new settings using solid-state devices— Continued

Device	ID	Settings
LC FDR	B5-2	LT=400A, LTD=2.2 SEC, INST=8

4-9. Example of ground-fault protection

Figure 4-11 illustrates possible settings for low-voltage ground-fault protection for the system of this example. The IC MAIN GFP can be set no higher than 1200A pick-up and one second time delay for ground-fault currents greater than 3000A. However, as discussed earlier, such a setting provides limited protection and may not coordinate with downstream standard overcurrent devices. Therefore, separate ground-fault protection at the IC MAIN and IC FDR is shown. The IC MAIN is set at 400A pick-up and 0.1 second time delay, while the LC FDR is set at 300A pickup and 0.08 second time delay.

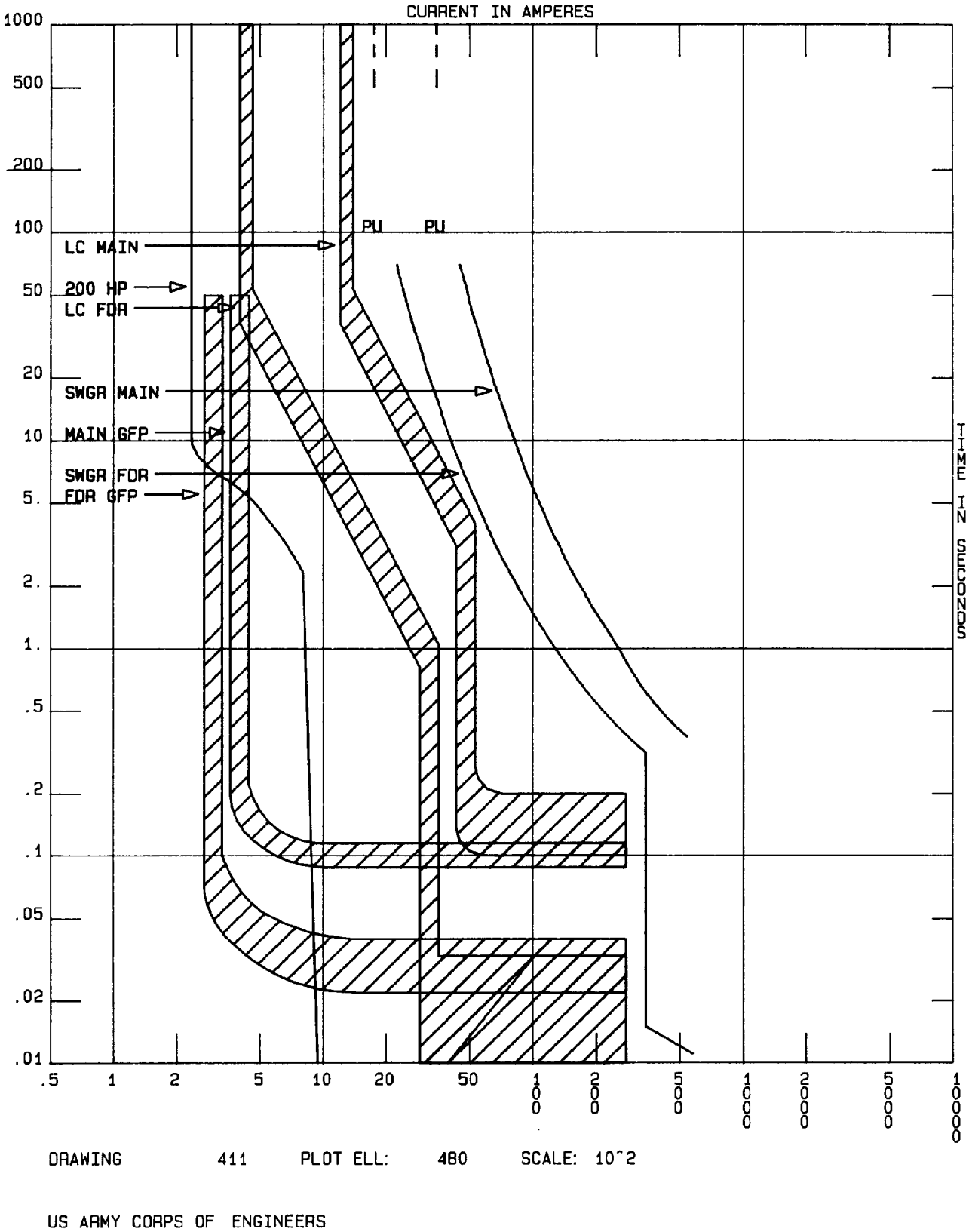

Figure 4-11. Low-voltage ground-fault protection.

CHAPTER 5

ELECTRICAL SYSTEM PROTECTION TECHNIQUES

5-1. Generator protection

Electrical power systems may include generators as alternate power sources or as emergency power sources. This paragraph will address the protection of single isolated generators, multiple isolated generators, and industrial generators.

a. Single isolated generators. Single isolated generators are normally operated in a standby mode and supply only emergency power. As such, they are usually connected to the electrical power system through an automatic transfer switch and are not operated in parallel with the main power supply. Hence, the name “isolated” generators. Minimum protection for a single isolated generator is shown in figure 5-1.

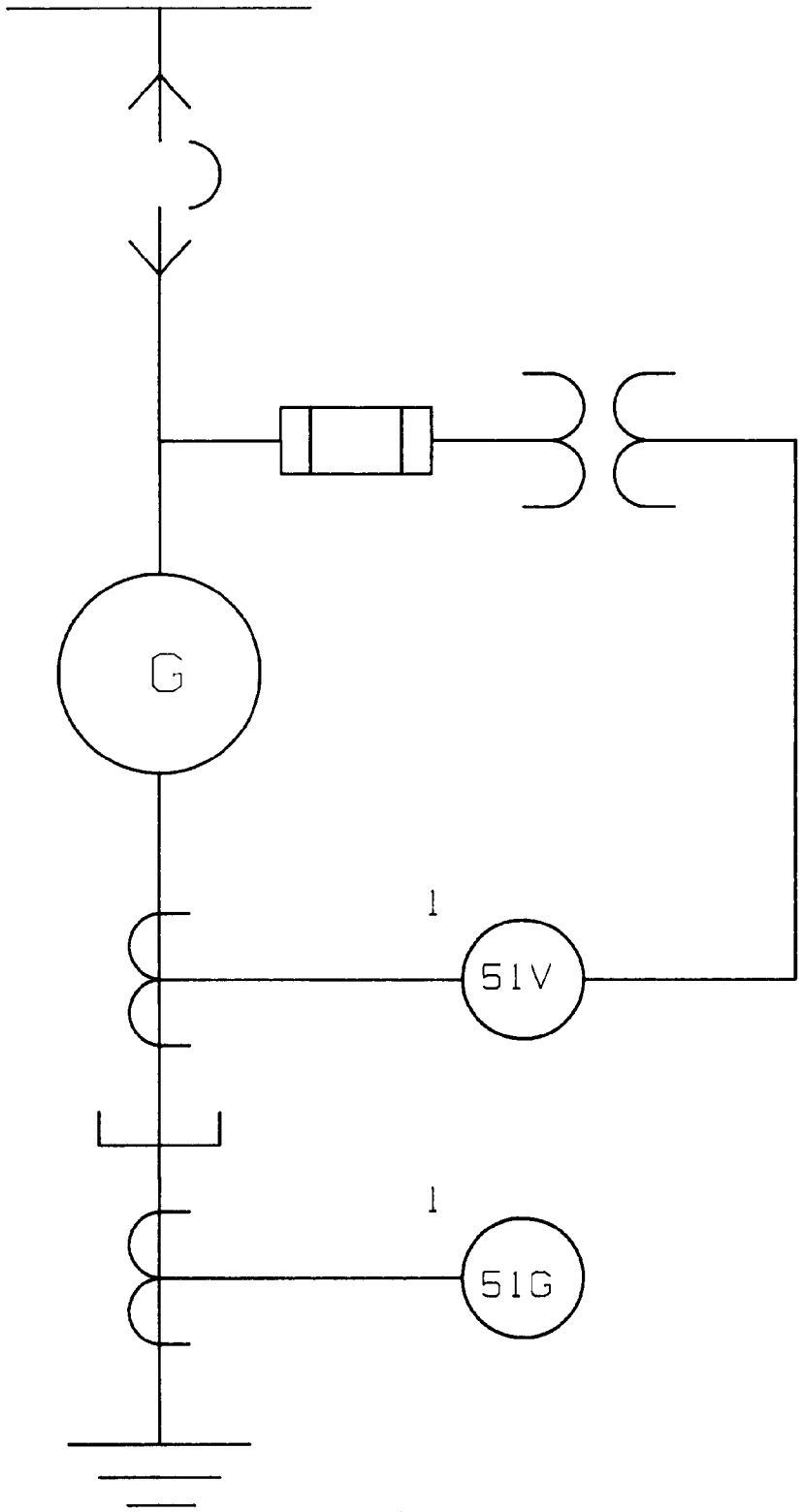

REPRINTED WITH PERMISSION FROM ANSI/IEEE STD 242-1986. IEEE RECOMMENDED PRACTICE FOR PROTECTION AND COORDINATION OF INDUSTRIAL AND COMMERCIAL POWER SYSTEMS. COPYRIGHT 1986 BY IEEE.

Figure 5-1. Single-isolated low-voltage generator.

b. Multiple isolated generators. Multiple isolated generators are normally used at large commercial or industrial facilities. Generally, several generators will be operated in parallel to provide a total energy system not connected to the main power supply. Hence, the name "multiple-isolated" generators. Minimum protection for multiple isolated generators is shown in figure 5-2.

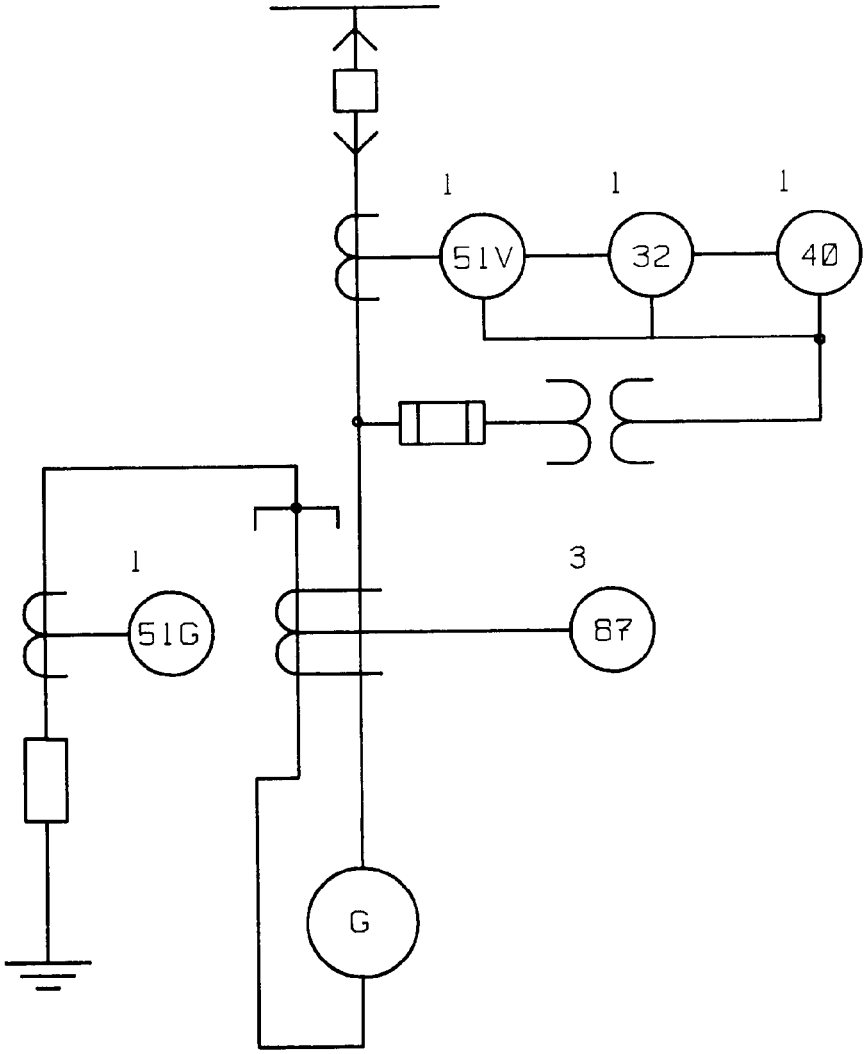

REPRINTED WITH PERMISSION FROM ANSI/IEEE STD 242-1986. IEEE RECOMMENDED PRACTICE FOR PROTECTION AND COORDINATION OF INDUSTRIAL AND COMMERCIAL POWER SYSTEMS. COPYRIGHT 1986 BY IEEE.

Figure 5-2. Multiple-isolated medium-voltage generator.

c. Industrial generators. Industrial generators may range from 10-50MVA and operate continuously in parallel with the main power supply. Minimum protection for medium industrial generators (up to 12.5MVA) is shown in figure 5-3, and minimum protection for large industrial generators (greater than 12.5MVA) is shown in figure 5-4. With a CT in the neutral, the 51V device is effective immediately while the generator is running. With a CT at the breaker, the 51V device is operational only after the generator is on-line. Utilities will require special relaying to protect their system from generator contribution to utility faults.

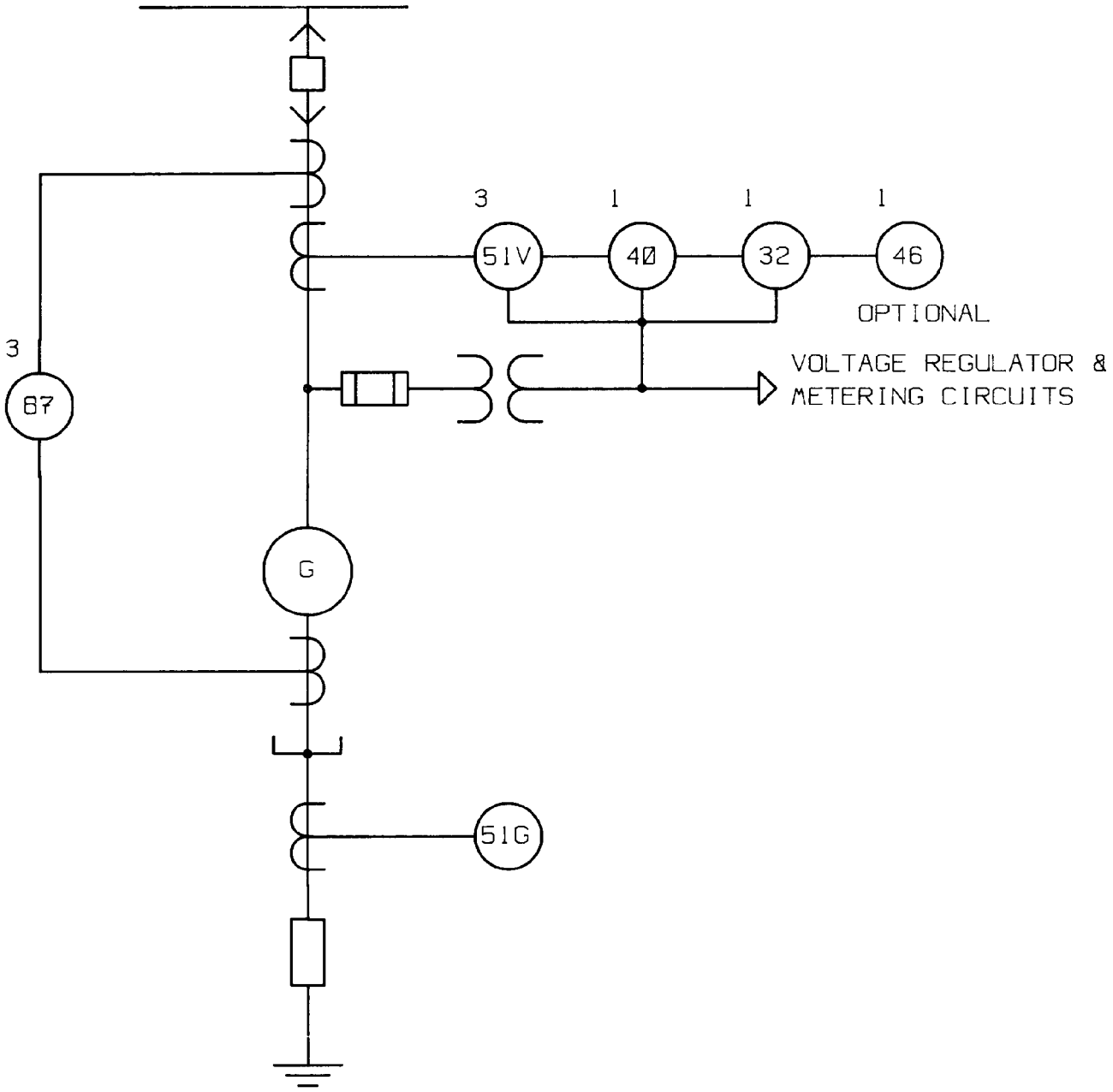

REPRINTED WITH PERMISSION FROM ANSI/IEEE STD 242-1986, IEEE RECOMMENDED PRACTICE FOR PROTECTION AND COORDINATION OF INDUSTRIAL AND COMMERCIAL POWER SYSTEMS. COPYRIGHT 1986 BY IEEE.

Figure 5-3. Medium industrial generators (up to 12.5MVA).

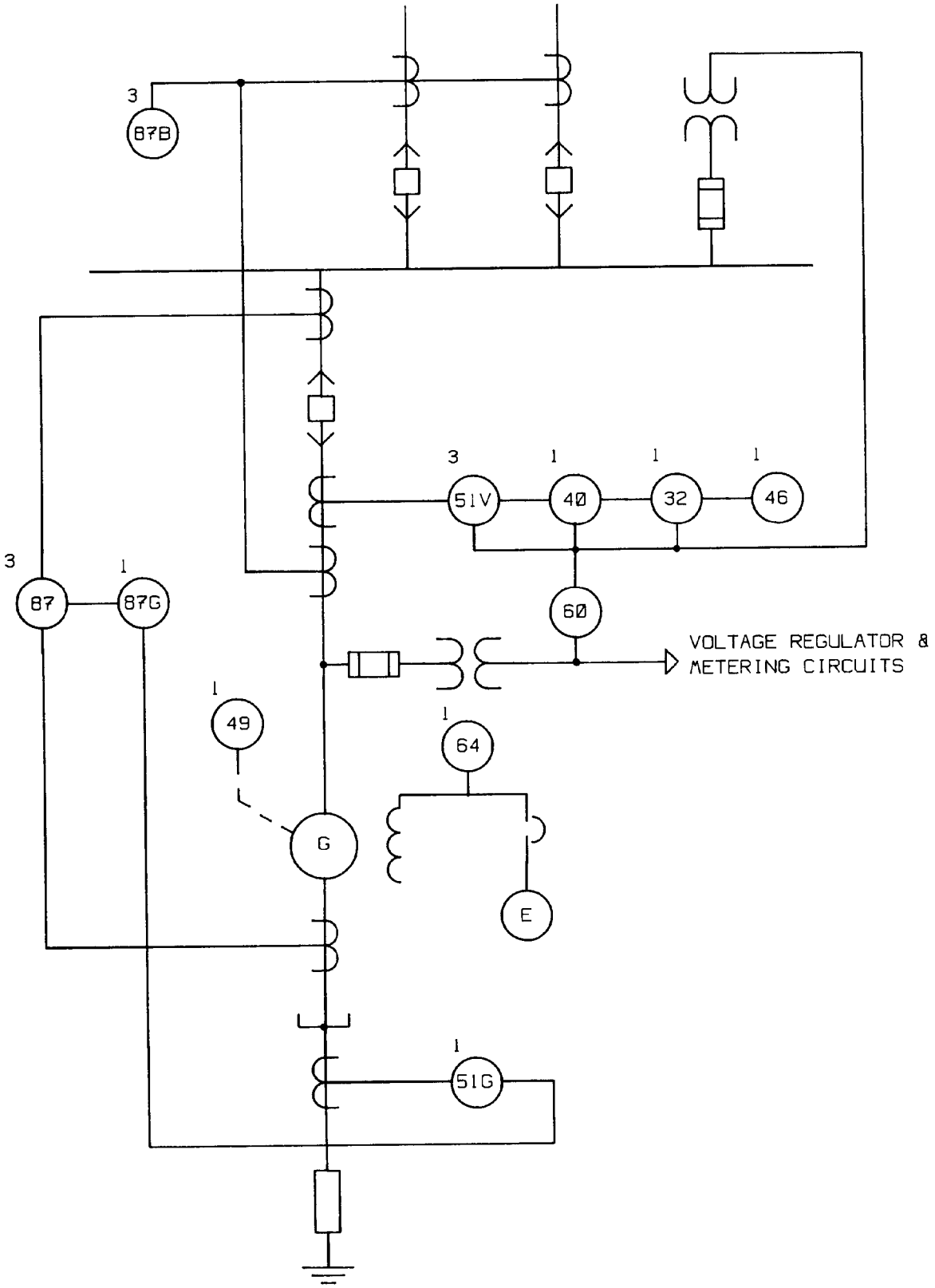

REPRINTED WITH PERMISSION FROM ANSI/IEEE STD. 242-1986. IEEE RECOMMENDED PRACTICE FOR PROTECTION AND COORDINATION OF INDUSTRIAL AND COMMERCIAL POWER SYSTEMS. COPYRIGHT 1986 BY IEEE.

Figure 5-4. Large industrial generators (greater than 12.5MVA).

d. Generator protective devices.

(1) Backup overcurrent protection *is* intended *to* protect the generator if a fault *is* not cleared by the primary protective devices. If the generator output bus is connected to equipment using overcurrent devices, device 51V is used. Application of overcurrent protection to generators is very sensitive since standard overcurrent relays may trip undesirably at large loads. As a result, special generator overcurrent relays are used. Voltage restraint and voltage controlled overcurrent relays provide operating characteristics that are a function of voltage as well as current, thus minimizing nuisance tripping. A 4 to 1 current pick-up range proportional to 100 percent to 0 percent of rated voltage are typical values.

(2) Backup ground overcurrent protection is provided by device 51G. Considerable time delay must often be set into this device in order to coordinate with all other ground relays on the system at the generator voltage level. The 51G device should also be set high enough to avoid pickup on normal harmonic currents flowing in the generator neutral. If the generator neutral is grounded through a resistance, device 59N may be connected in parallel with the neutral resistor to detect the voltage rise across the neutral resistor during a ground fault. A frequency sensitive overvoltage relay is required to differentiate between voltage produced by the fundamental and third harmonic currents.

(3) Differential relay protection is accomplished using device 87, and is similar to transformer differential protection described in this chapter.

(4) If the prime mover should lose its input, the generator will act like a motor and draw power from the downstream electrical distribution system. Therefore, a reverse power relay, device 32, must be applied which actually provides protection for the prime mover.

(5) other relays that can be used for generator applications include—

(a) Device 40 — Loss of field protection.
(b) Device 27 — Undervoltage relay.
(c) Device 49 — Overvoltage relay.
(d) Device 64F — Generator field protection.
(e) Overtemperature relays.

e. Generator shutdown. Total generator protection must include procedures for shutting down the prime mover in addition to disconnecting the generator from the electrical distribution system. Therefore, the generator manufacturer should be consulted to incorporate shutdown procedures into the coordination process. Basically, the shutdown procedure includes the following:

(1) Trip the generator circuit breaker.
(2) Trip the generator field circuit breaker.
(3) Remove prime mover input.
(4) Initiate alarms.

5-2. Transformer protection

This paragraph will address the proper protection methods for primary and secondary substation transformers. Primary substation transformers are generally rated 1 to 12MVA with secondary voltage of 15kV nominal. Secondary substation transformers are generally rated 300 to 2500kVA with secondary voltage of 600V nominal.

a. Primary overcurrent protection. An overcurrent protective device on the primary side of a transformer is intended to protect the transformer against internal faults (failure internal to the transformer) and through faults (abnormalities downstream of the transformer). The interrupting rating of the primary protective device should be rated for the maximum short-circuit current at the transformer primary. The primary protective device coordination curve should be below the through fault protection point but greater than the inrush excitation current. Additionally, NFPA 70 limits must be incorporated. Captive transformers, i.e., transformers supplied from a dedicated circuit breaker, do not require primary fusing but may require a disconnecting means. Where multiple transformers are supplied from a single circuit breaker, transformer primary protection may include fuses. On low-resistance grounded systems, transformer primary protection should incorporate a circuit breaker, not fuses. Low-resistance grounded systems are designed for ground-fault current to be approximately equal to full load amperes of the transformer. Ground-fault protection can, therefore, be applied easily with a circuit breaker arranged to trip from a neutral ground overcurrent relay.

(1) Overload protection. Transformers have a certain life expectancy based upon temperature ratings. Generally, a transformer is designed for a particular temperature rise above a certain ambient temperature. Overloading a transformer, whether accidentally or intentionally, will increase the temperature rise above the design limit, deteriorate the insulation, and reduce the transformer life expectancy. Transformer protection should consist of load limitation, overtemperature detection, and overcurrent protection.

(a) Load limitation may be accomplished by implementing manual or automatic load shedding

schemes. The same effect may be accomplished by oversizing the transformer kVA rating or undersizing the transformer temperature rise rating. Both methods, although expensive, will give extra transformer capacity. Cooling fans are a less expensive means of increasing transformer capacity.

(b) Monitoring devices mounted directly on or within the transformer itself can be used to detect overtemperature conditions. Such devices include liquid temperature indicators, thermostats, and thermal relays.

(c) Fuses, circuit breakers and overcurrent relays should be rated or set to provide maximum transformer protection. Therefore, the manufacturer' s recommendations should always be consulted. If specific manufacturer's information is not available, overcurrent protection should be set below short-time loading limits. These limits are defined by the transformer through fault curves shown in figures 5-5 through 5-8. As can be seen from the figures, curves are provided for both frequently and infrequently occurring faults. This is because transformer damage is cumulative. Since transformer damage is cumulative, the number of through faults that a transformer can tolerate is a function of its application. For example, transformers with secondary-side conductors protected in conduit will experience fewer through faults than transformers with exposed secondary-side conductors. The frequent- or infrequent-fault-incidence curve should be selected as appropriate for the application. The through fault protection curves may be used directly for wye-wye and delta-delta connected transformers. For delta-wye transformer connections, the through fault curves must be reduced by 58 percent.

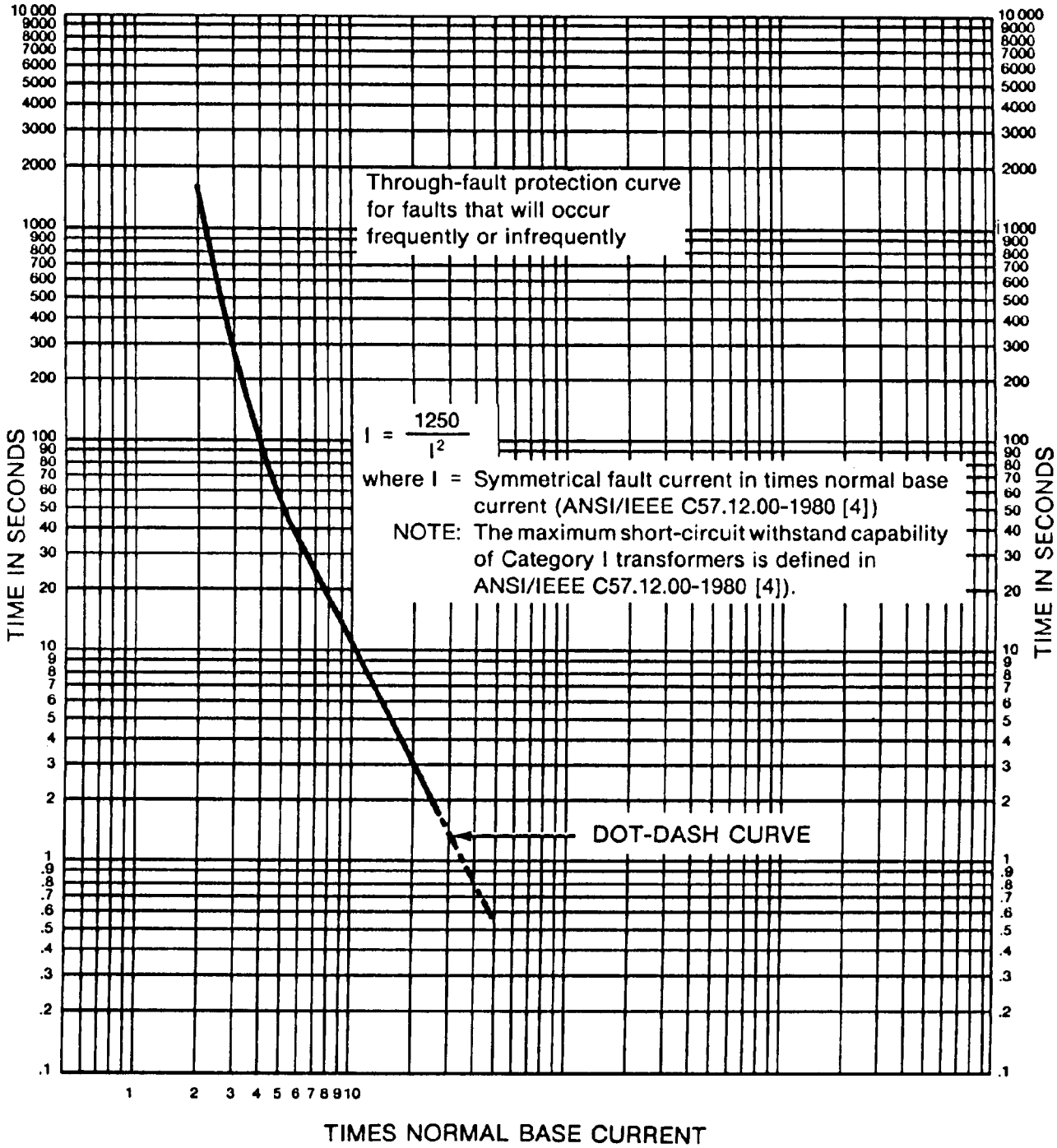

Reprinted with permission from ANSI/IEEE Std. 242-1986, IEEE Recommended Practice for Protection and Coordination of Industrial and Commercial Power Systems, copyright 1986 by IEEE.

Figure 5–5. Through-fault protection curves for liquid-immersed category I transformers (5kVA to 500kVA single-phase, 15kVA to 500kVA three-phase).

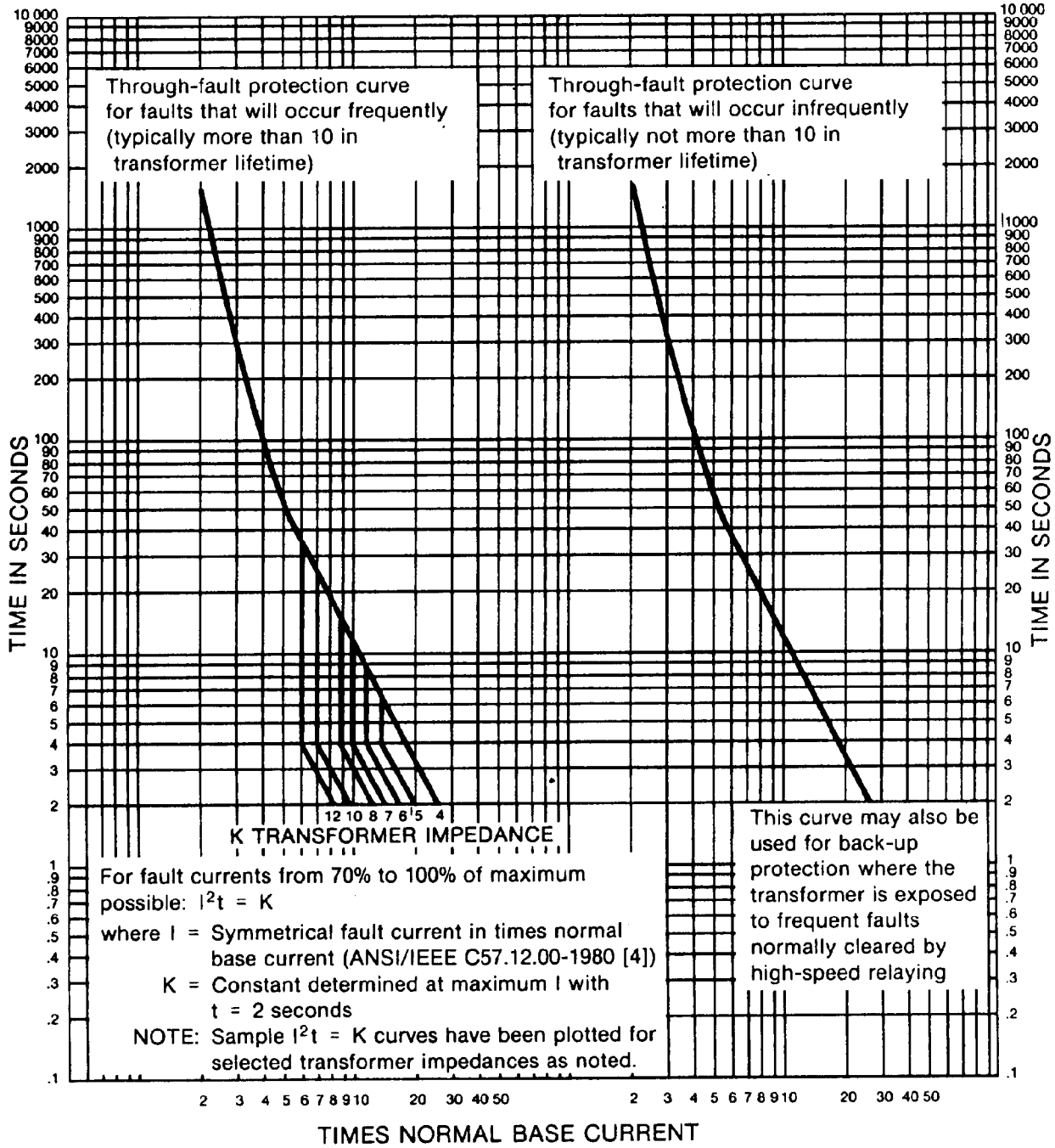

Reprinted with permission from ANSI/IEEE Std. 242-1986, IEEE Recommended Practice for Protection and Coordination of Industrial and Commercial Power Systems, copyright 1986 by IEEE.

Figure 5-6. Through-fault protection curves for liquid-immersed category II transformers (501kVA to 1667kVA single-phase, 501kVA to 5000kVA three-phase).

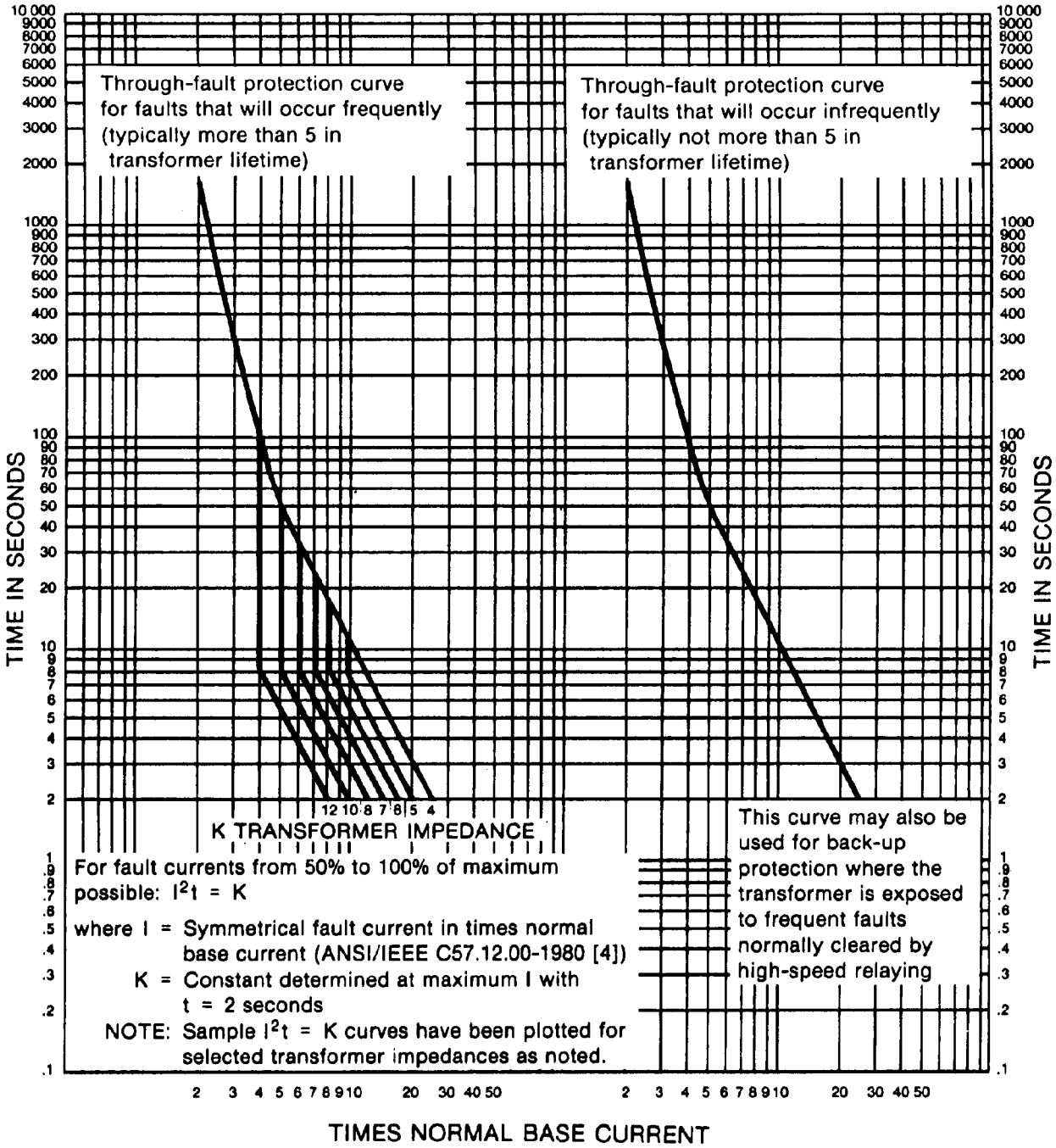

Reprinted with permission from ANSI/IEEE Std. 242-1986, IEEE Recommended Practice for Protection and Coordination of Industrial and Commercial Power Systems, copyright 1986 by IEEE

Figure 5-7. Through-fault protection curves for liquid-immersed category III transformers (1668kVA to 10,000kVA single-phase, 5001kVA to 30,000kVA three-phase).

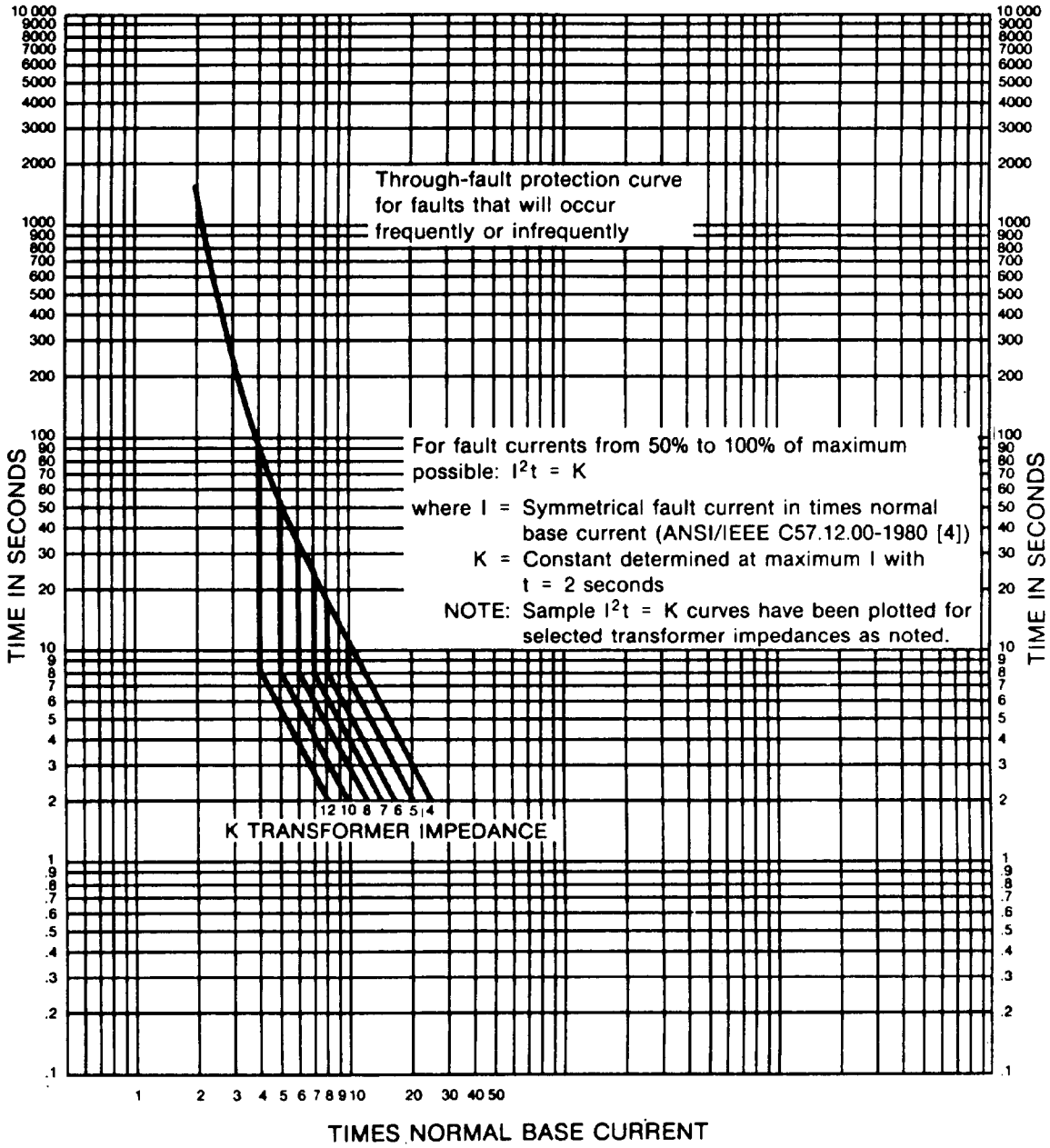

Reprinted with permission from ANSI/IEEE Std. 242-1986, IEEE Recommended Practice for Protection and Coordination of Industrial and Commercial Power Systems, copyright 1986 by IEEE.

Figure 5–8. Through-fault protection curves for liquid-immersed category IV transformers (above 10,000kVA single-phase, above 30,000kVA three-phase).

(2) Internal and external short-circuits can subject transformers to extreme magnetic forces, high temperature rise, and extreme arcing energy. Since the transformer impedance is often the only limiter of short-circuit currents from downstream faults, low-impedance transformers may be subjected to extremely high short-circuit currents. Short-circuit protection may be accomplished by detecting the magnitude of short-circuit current or by detecting gases that may be present within the transformer as a result of an internal fault.

(a) Gas detection devices include pressure-relief valves, gas-detector relays, and high pressure relays.

(b) Short-circuit current detection devices include fuses, circuit breakers, and relays. These devices, like overload protective devices, should be rated or set to provide maximum protection and be rated to withstand and interrupt the maximum short-circuit current available at the fault point. Selective coordination, as described by the coordination examples in appendix G, may allow for some reduction.

b. Secondary overcurrent protection. Chapter 4 described the NFPA 70 limits for transformers with primary protection only, and for transformers with both primary and secondary protection. These guidelines must be followed in addition to the through fault protection curves described in this chapter. The location of the overcurrent protective devices must be considered in addition to the through fault incidence. Figure 5-9 shows two transformer applications. The transformer in figure 5-9(a) is subjected to frequent through; faults, while the transformer in figure 5-9(b) is subjected to infrequent through faults. Since the secondary feeder protection (devices A, B, and C in figure 5-9(a)) is the first-line of defense against through faults, these devices should be rated or set based on the frequent-fault curve. Furthermore, since the transformer primary and secondary protective devices (W and X in figure 5-9(a)) are intended to provide transformer protection and backup feeder protection, these devices may be rated or set based on the infrequent-fault curve. Now, consider figure 5-9(b). All devices (D, E, F, Y, and Z) should be rated or set based on the infrequent- fault curve.

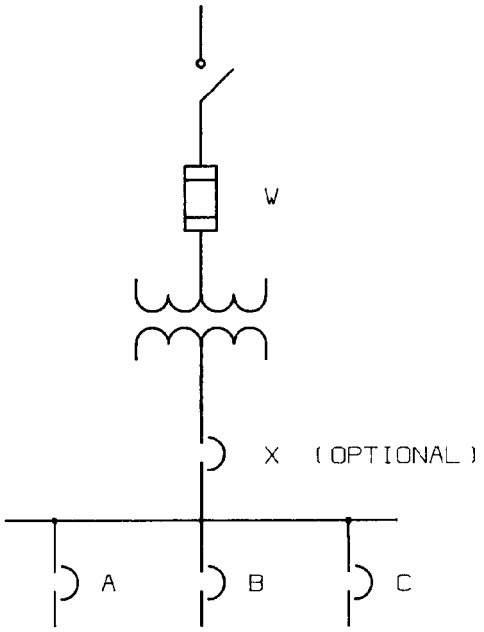

(a) FREQUENT FAULTS

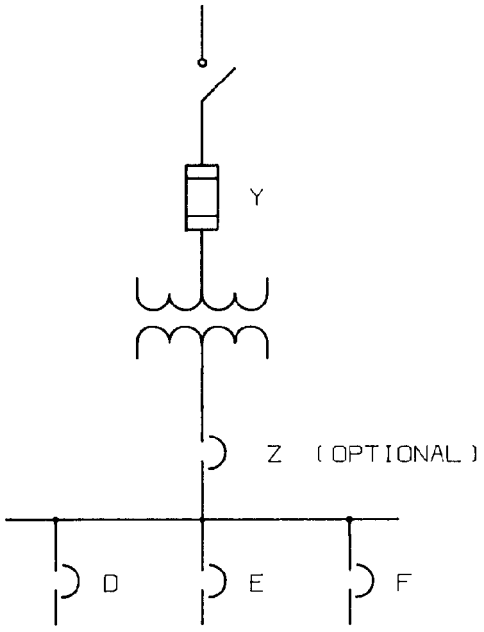

(b) INFREQUENT FAULTS

US ARMY CORPS OF ENGINEERS

Figure 5-9. Transformer overcurrent protection.

c. Differential relaying. Larger transformers should be protected by differential relays in addition to primary and secondary overcurrent protection, and overtemperature and overpressure detection. Phase differential relaying, illustrated in figure 5-10, compares the current entering the protected zone with the current leaving the protected zone. Operation of transformer differential relays is based on a percentage of entering current to through current, which is referred to as the relay slope. If the difference between the current entering and leaving the protected zone exceeds the relay slope, a fault is indicated and a relay operates the transformer primary device. Remote protective devices may be operated through pilot wire schemes. Modern pilot wire schemes are beginning to incorporate fibre optic technology. Phase differential relays should be supplemented with secondary ground differential relays on resistance-grounded transformers.

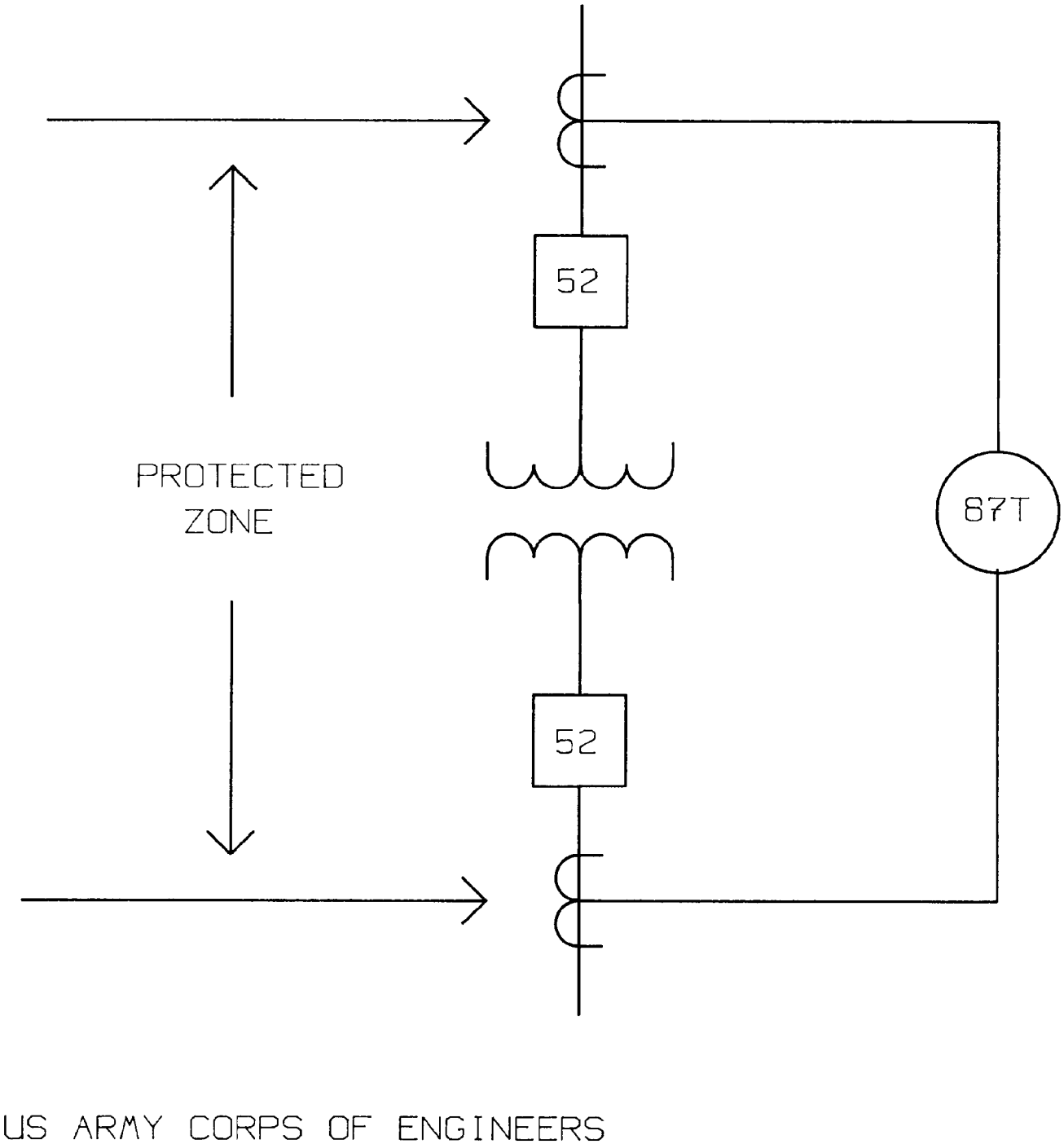

Figure 5-10. Phase differential relaying.

5-3. Conductor protection

As with transformers, high conductor temperatures can result in shortened conductor life expectancy, or even failure. High conductor temperatures are caused by current flowing through conductor resistance (I^2R losses), excessive ambient temperature, or both. This paragraph will address the proper protection methods for conductors and busways. Conductors require overload, short-circuit, and physical protection, while busways require only overload and short-circuit protection. The derating of conductors and busways will be

covered in addition to the proper rating and setting of protective devices.

a. Conductor ratings. In addition to voltage and current ratings, modern conductors possess a percent insulation level (IL) rating. Time delays associated with overcurrent protective devices should be coordinated with these ratings as follows:

(1) 100 percent IL—Not required to operate longer than one minute under ground fault.

(2) 133 percent IL—Not required to operate longer than one hour under ground fault.

(3) 173 percent IL—Required to operate longer than one hour continuously under single line-to-ground fault.

b. System grounding The method of system grounding can affect the magnitude of overvoltages to which the system may be subjected. The magnitude of overvoltages, in turn, has an effect on the conductor insulation level rating. The line-to-ground voltage in an effectively grounded system will not exceed the line-to-neutral value under ground-fault conditions. The line-to-ground voltage in an ungrounded or high resistance grounded system may equal line-to-line voltage under bolted ground-fault conditions. Under arcing ground fault conditions or resonant conditions, line-to-ground voltage may be several times normal.

c. Short-circuit protection. Under short-circuit conditions, conductor temperatures should not be allowed to increase to the point of damage to conductor insulation. Since short-circuits are designed to be cleared very quickly, heat generated from conductor I^2R losses is almost completely confined to the conductor metal. The heat has no time to be transferred to the conductor covering, raceway, or final surroundings. On that basis the temperature rise is a function of the cross-sectional area of the metallic conductor, the magnitude of the short-circuit current, and the time that the current is allowed to persist. Engineering curves based on this time-temperature-current relationship have been developed for conveniently selecting proper conductor sizes. Figure 5-11 shows typical curves for copper conductors from 75-200 degrees C. Protective devices should be selected by plotting the short-circuit time current curves of the protected conductors on the composite graph along with the time-current characteristic curve of the protective device.

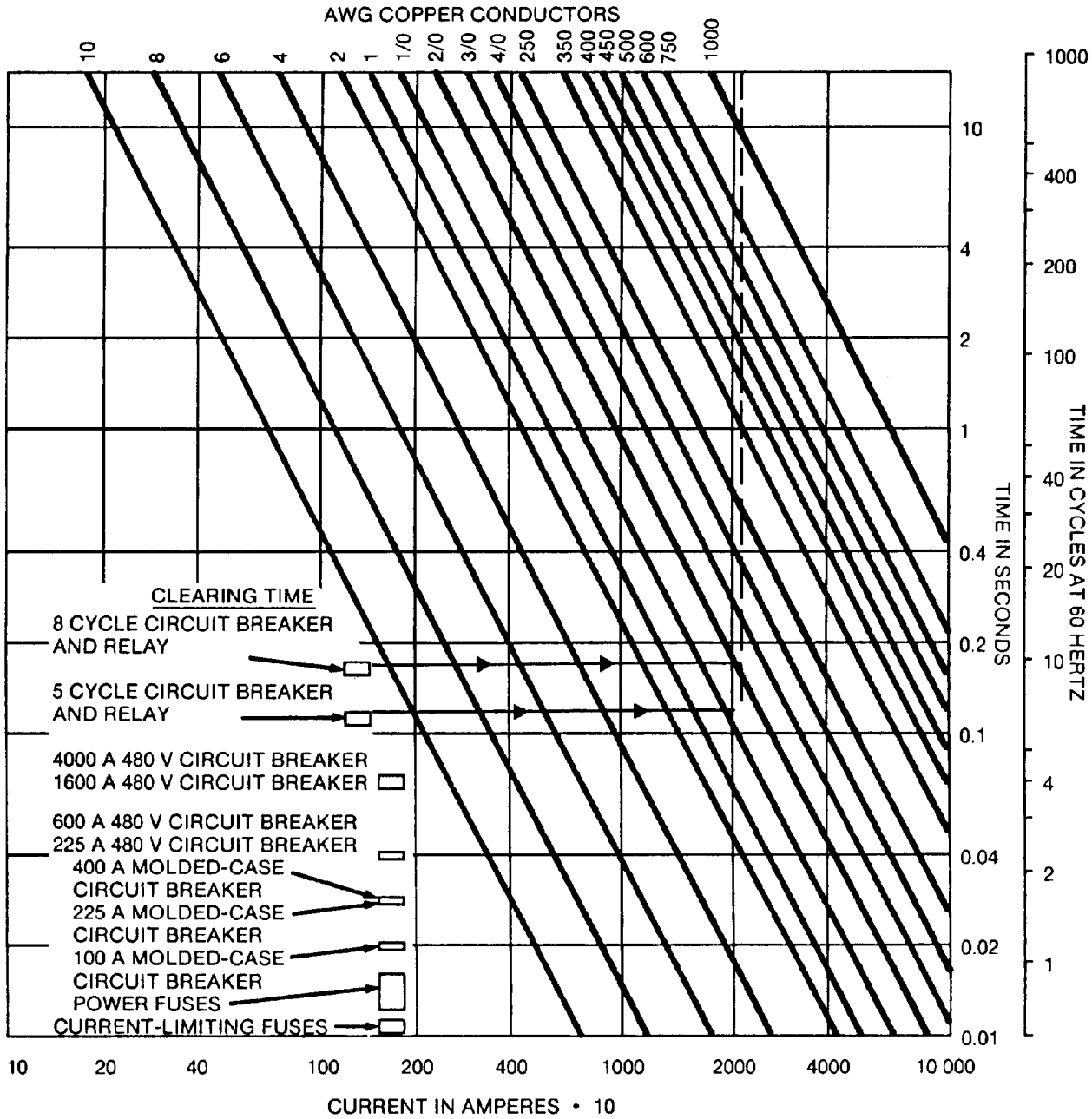

Reprinted with permission from ANSI/IEEE Std. 242-1986, IEEE Recommended Practice for Protection and Coordination of Industrial and Commercial Power Systems, copyright 1986 by IEEE.

Figure 5–11. Maximum short-circuit current for insulated copper conductors; initial temperature 75 degrees C; final temperature 200 degrees C.

d. Overload protection. As stated previously, temperature rise in conductors is a result of I^2R losses. Conductor selection, then, is essentially a heat transfer problem. The heat must be transferred from the metallic conductor through the conductor insulation, surrounding air, raceway, and the final surroundings. The thermal resistance of the conductor insulation can be readily estimated, but

the thermal insulation of the other items depends on a number of factors including raceway size, number of ducts, and number of cables. Protective devices should be selected and conductors sized by plotting the overload time-current curves of the protected conductors on the composite graph along with the time-current characteristic curve of the protective device. Overload time-current curves for typical conductors are shown in figure 5-12.

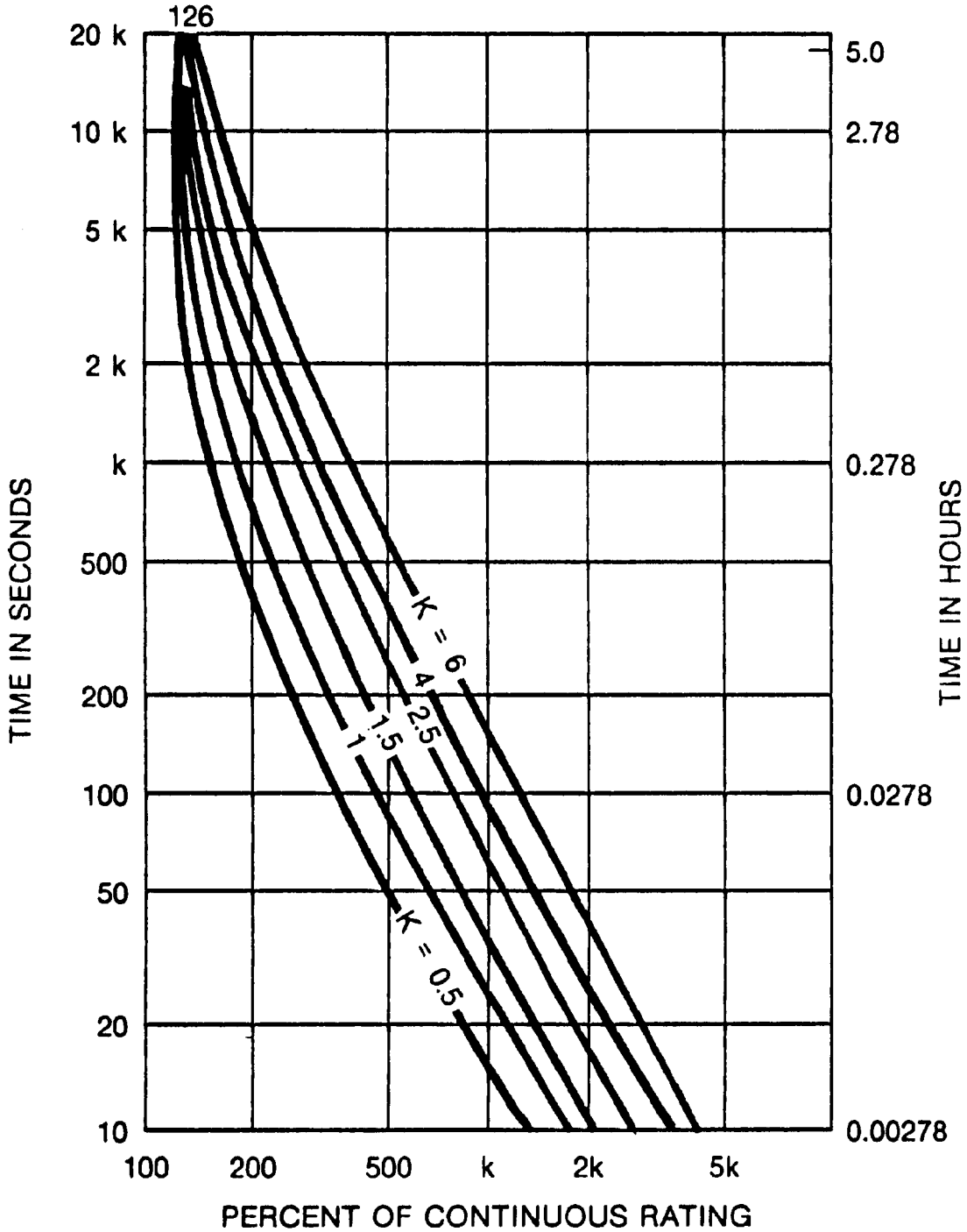

Reprinted with permission from ANSI/IEEE Std. 242-1986, IEEE Recommended Practice for Protection and Coordination of Industrial and Commercial Power Systems, copyright 1986 by IEEE.

Figure 5-12. Emergency overload current percent of continuous rating EPR—XLP insulated 40 degrees C ambient.

(1) Ampacity is defined as the current in amperes a conductor can carry continuously under the conditions of use without exceeding its temperature rating. NFPA 70 publishes ampacity tables, and guidelines for the proper selection of conductors. Ampacities of conductors not under the jurisdiction of NFPA 70 are published by the Insulated Cable Engineers Association (ICEA).

(2) NFPA 70 provides specific guidelines for derating conductors installed in areas with excessive ambient temperatures and for more than three current-carrying conductors in a single raceway. New NFPA 70 guidelines now cover derating of conductors installed in underground ductbanks and directly buried. Fill limits instead of derating factors for low-voltage cables installed in cable trays are also covered.

5-4. Motor protection

There are many variables involved in motor and motor circuit protection. These variables include motor characteristics, starting conditions, ambient and environmental conditions, motor loading, and the electrical distribution system itself. This paragraph will address protection for low-voltage and medium-voltage motors.

a. Low-voltage motor& NFPA 70 provides specific guidelines for low-voltage motor circuit protection. Two NFPA 70 articles make specific reference to motor circuit applications. Article 430 covers motors, motor circuits, and controllers in general, while Article 440 applies specifically to motor-driven air conditioning and refrigerating equipment.

(1) Figure 5-13 shows the basic motor circuit components which must be specified. Although all components are shown separately, NFPA 70 will, in certain instances, allow a single motor circuit component to serve multiple functions. For example, a switch or circuit breaker may serve as both disconnecting means and motor controller, based on certain NFPA 70 requirements.

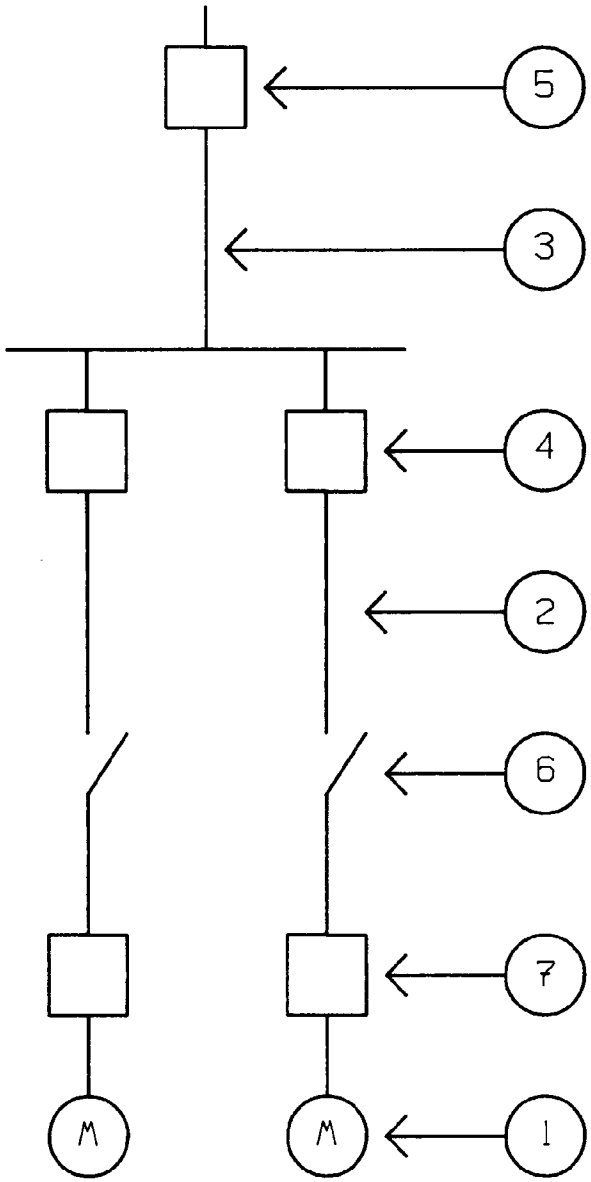

US ARMY CORPS OF ENGINEERS

STEP	REQUIREMENT	PROCEDURE
1	DETERMINE MOTOR PARAMETERS	FLA * LRA * NPA *
2	SELECT BRANCH CONDUCTORS	(1.25)(FLA)
3	SELECT FEEDER CONDUCTORS	(1.25)(LARGEST FLA) +(REMAINING FLA)
4	SELECT BRANCH CIRCUIT SHORT-CIRCUIT PROTECTION	NFPA 70
5	SELECT FEEDER SHORT-CIRCUIT PROTECTION	(LARGEST DEVICE) +(REMAINING FLA)
6	SELECT DISCONNECTING MEANS	(1.15)(FLA)
7	SELECT OVERLOAD PROTECTION	USE NPA

* FLA = FULL LOAD AMPERES
* LRA = LOCKED ROTOR AMPERES
* NPA = NAMEPLATE AMPERES

Figure 5-13. Motor circuit requirements.

(2) Overload protection (step 7, figure 5-13) for the motor, controller, disconnecting means, and circuit conductors may be provided by fuses, circuit breakers, overload relays, or motor integral thermal protectors. Article 430 of NFPA 70 establishes requirements for motor circuit overload protection.

(3) Short-circuit protection (steps 4 and 5, figure 5-13) may be provided by fuses or circuit breakers. These devices protect the motor, controller, disconnecting means, and circuit conductors against short-circuit currents. Article 430 of NFPA 70 covers the requirements for short-circuit protection.

(4) In practice, bolted short-circuits rarely occur. Most faults involve ground and are usually of the arcing type. Low-level, arcing ground faults, which usually fall below the protective range of standard overcurrent protective devices, can cause extensive damage in motor circuits. Furthermore, separate ground-fault protection designed specifically to respond to arcing ground-faults is not required for motor circuits. Ground-fault protection is required only at 480Y/277V services, and a maximum sensitivity limit of 1,200 amp is specified.

(5) Although the phrase "ground-fault protection" is also used in Article 430 of NFPA 70, it is not intended to require separate ground-fault protection for motor circuits in the same sense that it does for services. Standard overcurrent protective devices provide good protection against bolted ground-faults and limited protection against high level, arcing ground-faults. Therefore, these devices are referred to as "short-circuit and ground-fault protective devices" by NFPA 70.

(6) Low-voltage motor circuit protection techniques are covered in detail by the coordination examples in appendix G.

b. Medium-voltage motors. Medium-voltage motors generally range from above 1,000V to about 15kV. In addition to overload, short-circuit, and ground-fault protection, medium-voltage motors may also include undervoltage protection, phase unbalance protection, phase current differential protection, and winding overtemperature protection.

(1) Overload, short-circuit, and ground-fault protection are not motor-specific, and are applied to all components of the electrical distribution system described in this manual. Overload, short-circuit, and ground-fault protection for motors and other components are illustrated in detail by the coordination examples in appendix G. Figures 5-14 through 5-17 show minimum protection for medium-voltage induction and synchronous motors.

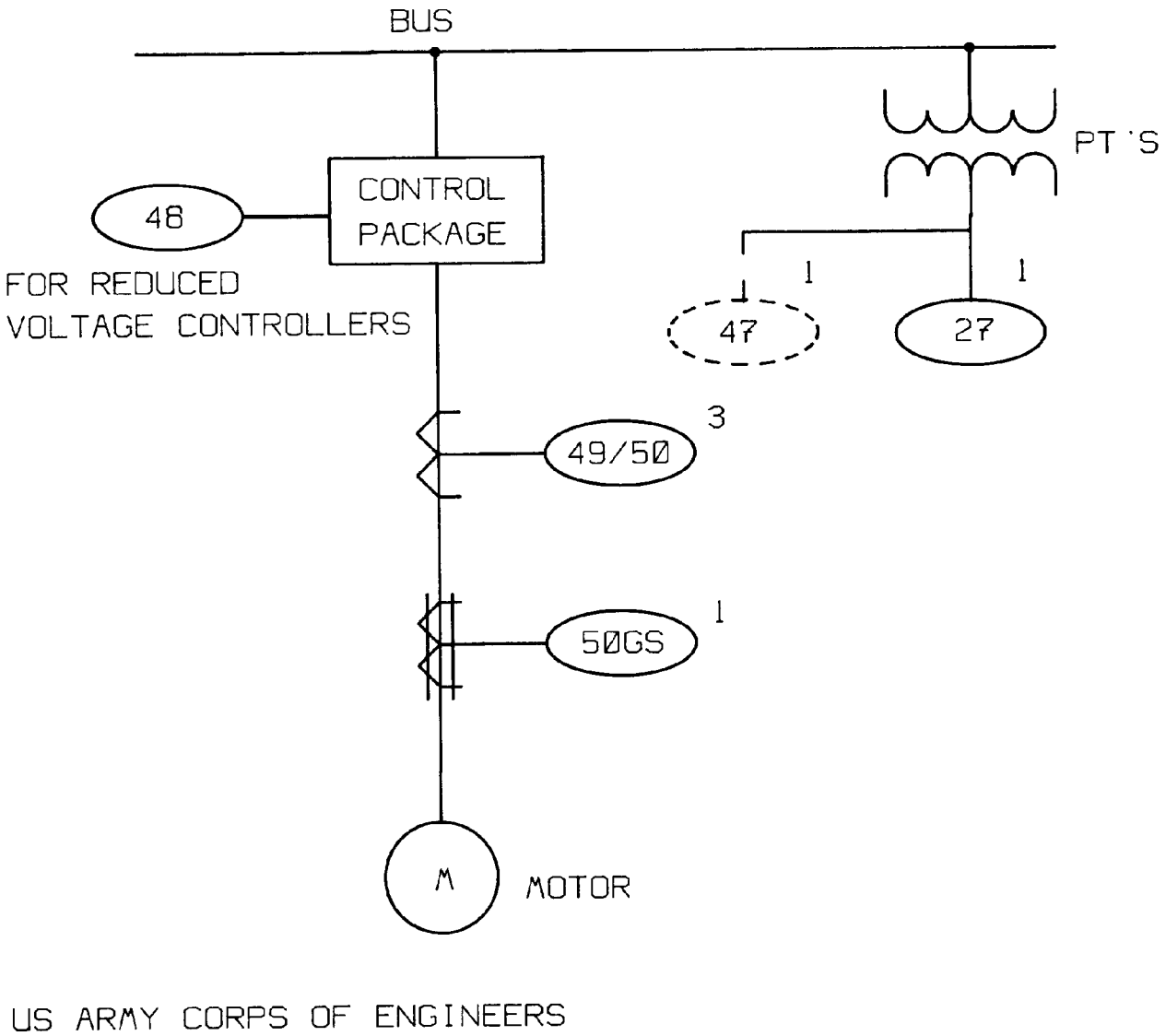

Figure 5-14. Minimum protection for induction motor less than 1500 Hp.

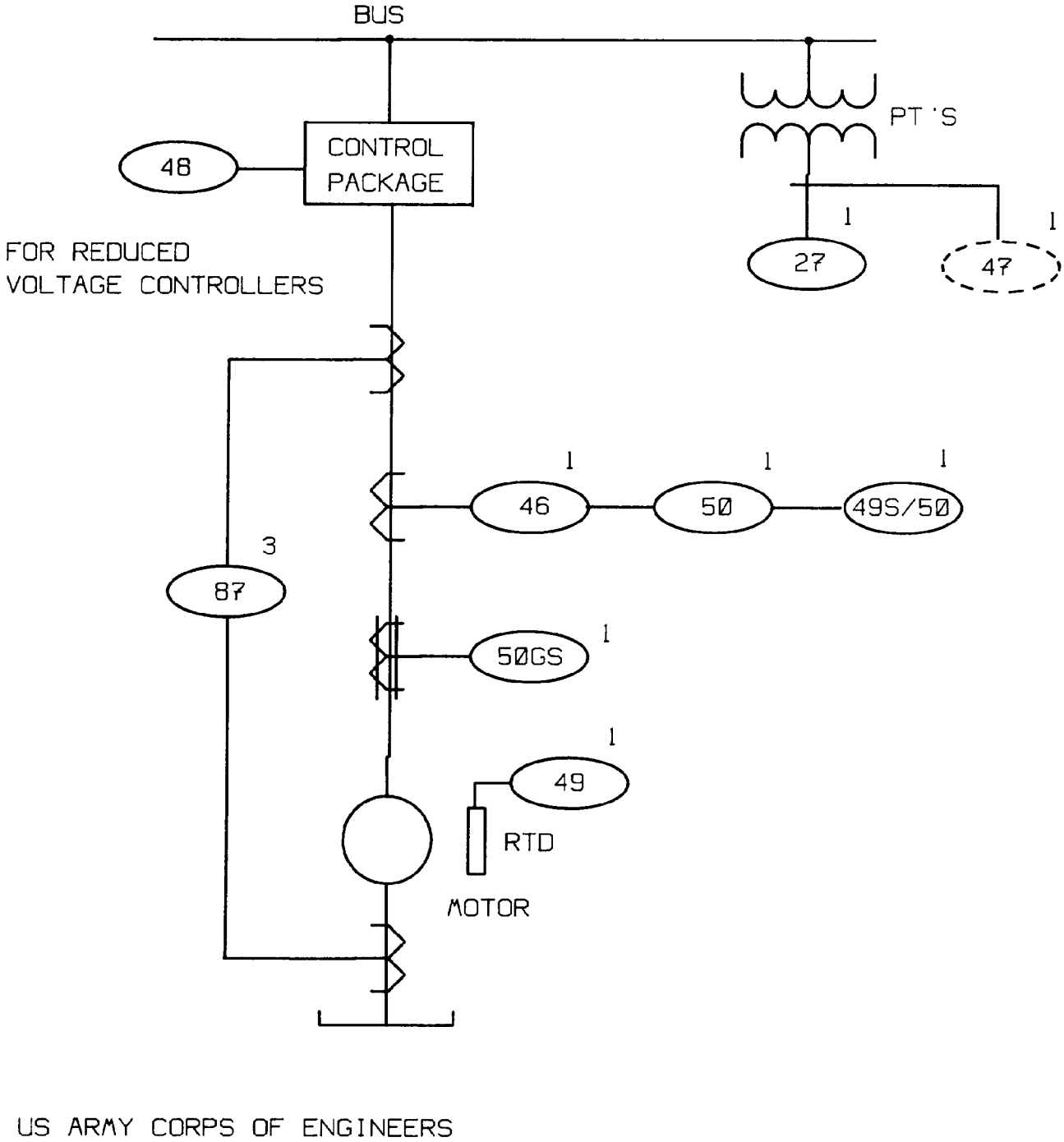

Figure 5-15. Minimum protection for induction motor 1500 Hp and larger.

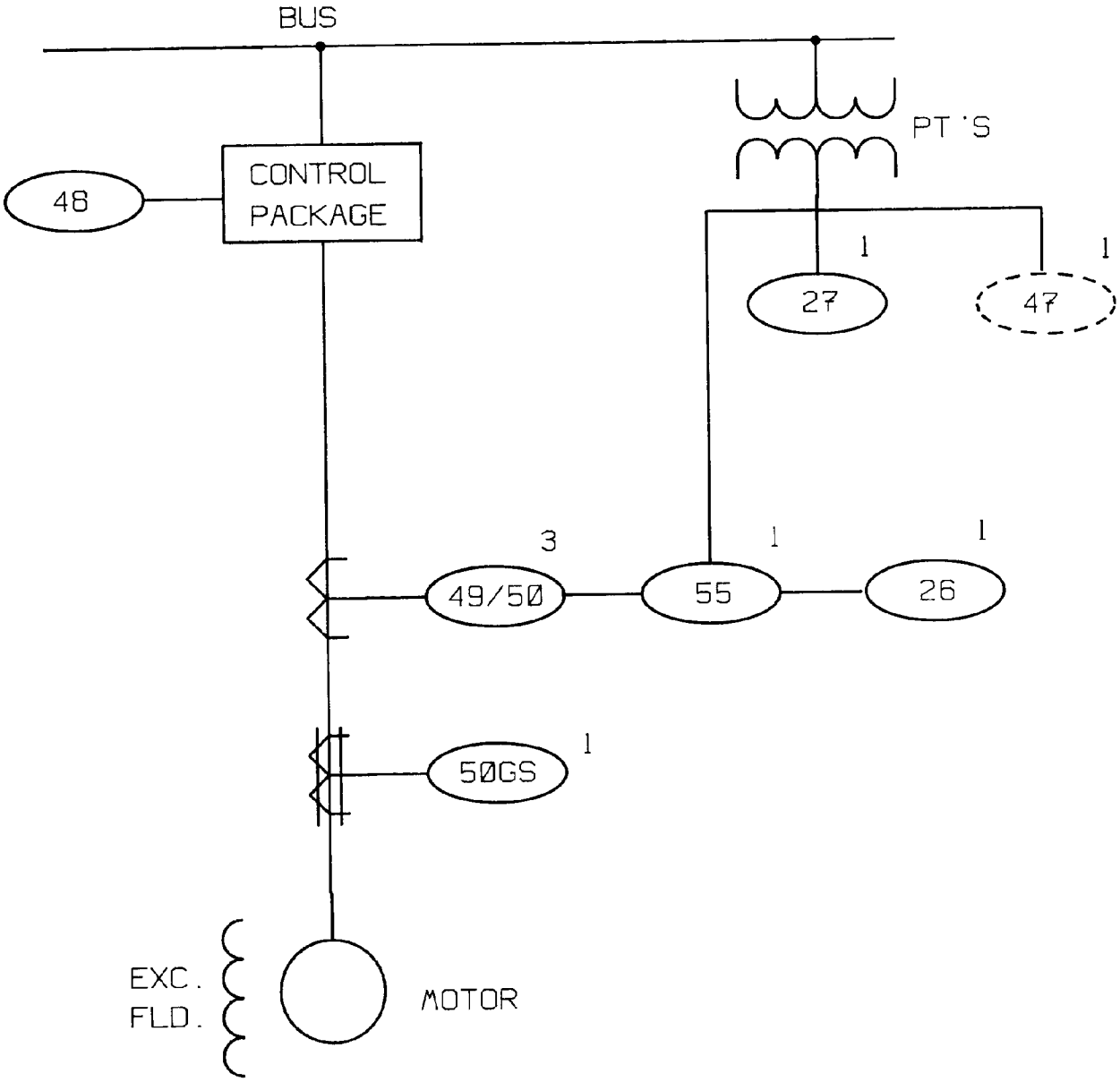

US ARMY CORPS OF ENGINEERS

Figure 5-16. Minimum protection for MV, brushless synchronous motor less than 1500 Hp.

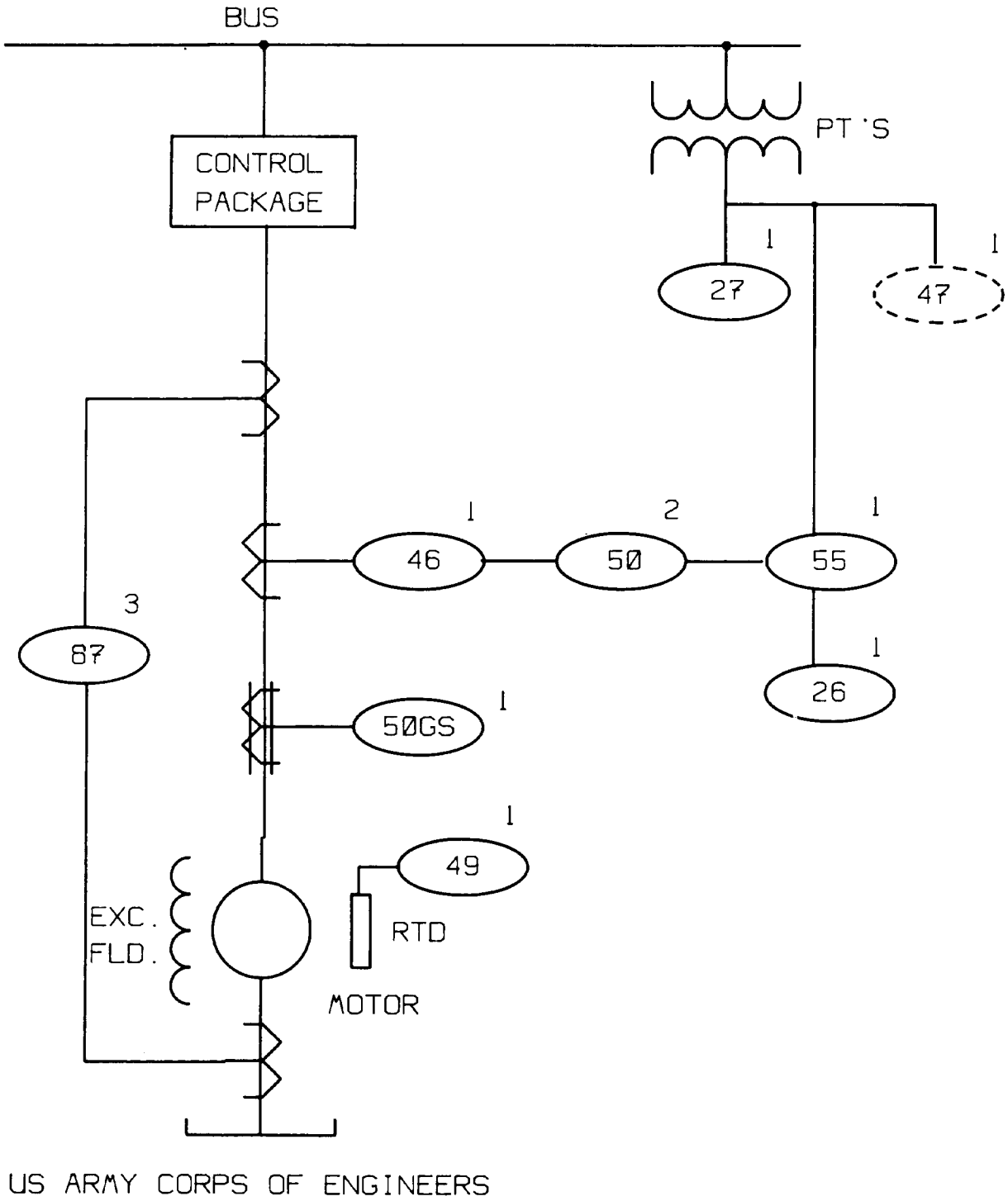

Figure 5-17. Minimum protection for MV, brushless synchronous motor 1500 Hp and larger.

(2) Undervoltage protection may he applied to motor circuits to prevent motor restarting when the system voltage is returned after a power interruption. Instantaneous and time-delay undervoltage relays are available depending upon the application.

(3) Phase unbalance protection for motors is necessary to prevent the motor from being damaged from overheating. When an unbalanced condition exists (single-phasing is an extreme example), increased phase currents result as the motor tries to deliver rated horsepower with the unbalanced

voltages. Phase unbalance protection should be applied where single-phasing is a distinct possibility, such as with upstream fuses or overhead lines. Phase unbalance protection is recommended for all motors rated 1,000 Hp and larger. For smaller motors, cost and the specific installation will dictate whether phase unbalance protection is included.

(4) Phase current differential protection is used to quickly detect abnormal fault conditions. Self-balancing differential protection is illustrated in figure 5-18. Three window-type CTs are normally installed at the motor. Line and neutral conductors of each phase winding are passed through a CT in such a way that the line and neutral currents of each phase winding cancel each other. A fault in one of the windings will result in a CT output and operate the associated relay.

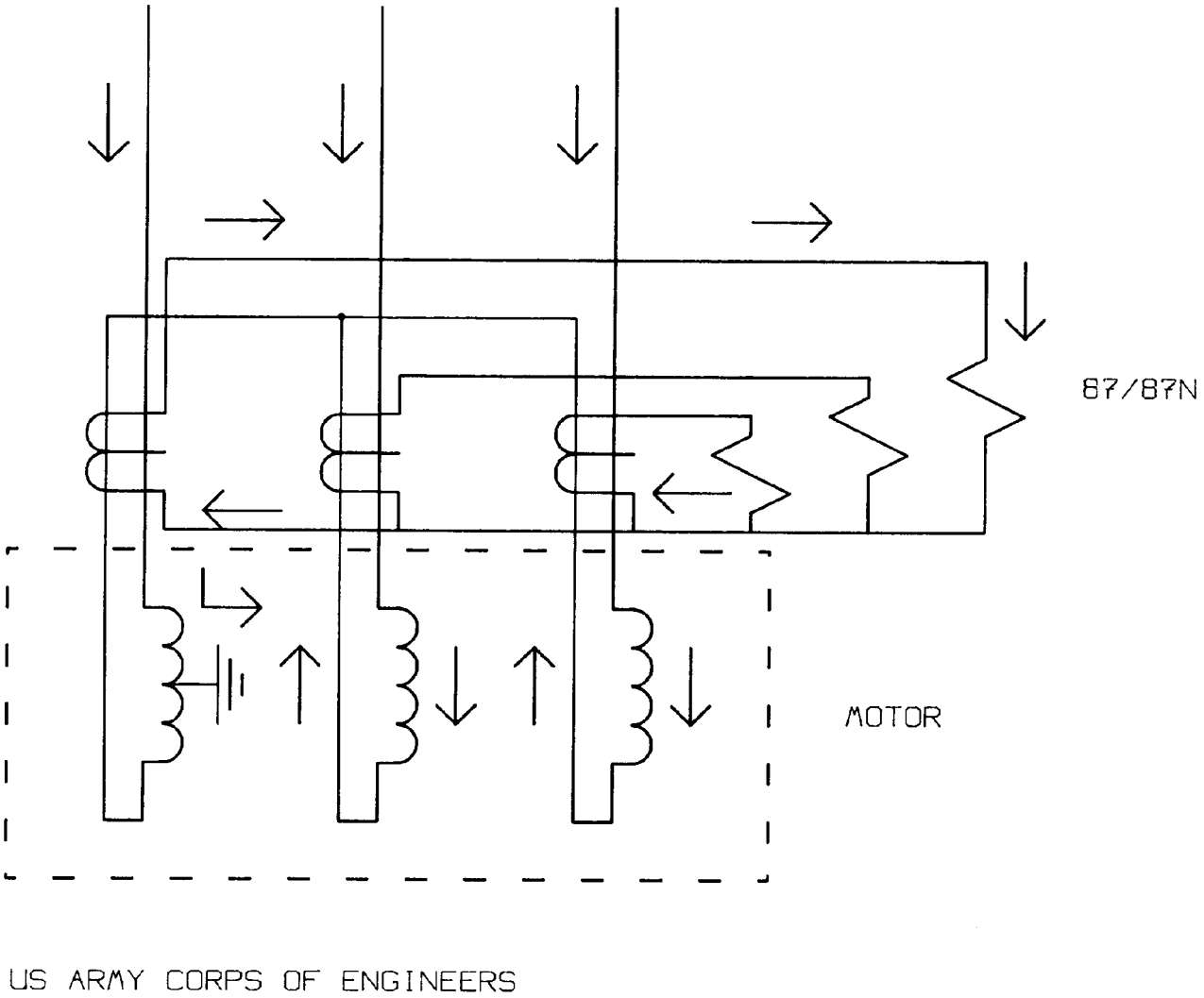

Figure 5-18. Motor self-balance differential protection.

(5) Winding overtemperature protection can be applied to stator windings. Rotor winding overtemperature protection can be applied in close proximity to wind rotor induction motor starting resistors. The purpose of overtemperature protection is to detect excessive stator or rotor winding temperatures. Protection should be designed to alarm only on overtemperature since large motor installations are normally supervised. If supervision is

limited, two temperature settings can he specified, primary set to alarm, and back-up set to trip.

(6) Controllers for medium-voltage motors are designed as complete, self-contained units. Ratings are based on the maximum horsepower rating of the induction, synchronous, or multi-speed motor load using full- or reduced-voltage starting methods. Magnetic-fused-type controllers employ current-limiting power fuses and magnetic, air-break contactors. Medium-voltage controllers offer considerable cost advantages over switchgear and pro- vide more reliable short circuit protection on low current circuits. Combination motor controller/ switchgear assemblies are available.

(7) Single-phasing is one of the most common causes of motor failure. During single-phasing, the motor voltages, currents, and phase angles are severely unbalanced, and there is considerable harmonic content present. Single-phasing protection should be specified for motor protection which employs fuses.

5-5. Bus and switchgear protection

When protective devices are applied to the substation bus and switchgear components of an electrical distribution system, it must operate on bus and switchgear faults only. Modern bus and switchgear equipment is very reliable. Although bus faults are very rare, they can produce disastrous results when they do occur. Therefore, sensitive, high-speed protection can be applied.

a. Differential protection. Typical bus configurations employing differential relaying are shown in figures 5-19 through 5-22. Differential relaying is high-speed, sensitive, and can he overlapped with other relaying on the system. It can be used on 5kV to 15kV systems, but should not be used on Low-voltage systems. Differential relaying should supplement standard overcurrent protection, and should he applied where extra protection is needed such as:

(1) Open-type, outdoor busses.

(2) Installations where long, down-time periods cannot be tolerated.

(3) Where system coordination is difficult to achieve.

(4) Busses supplied by a local generator.

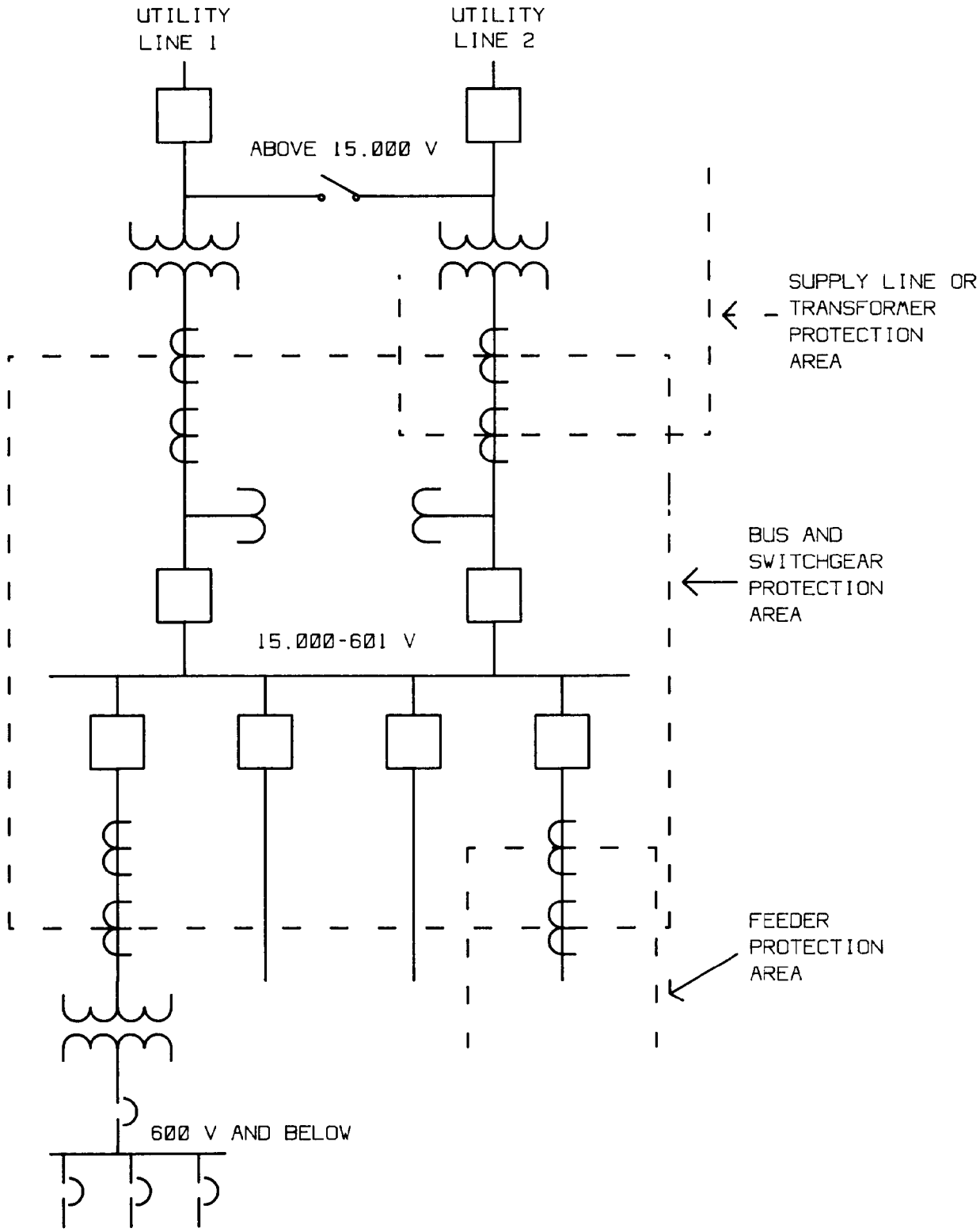

REPRINTED WITH PERMISSION FROM ANSI/IEEE STD 242-1986. IEEE RECOMMENDED PRACTICE FOR PROTECTION AND COORDINATION OF INDUSTRIAL AND COMMERCIAL POWER SYSTEMS. COPYRIGHT 1986 BY IEEE.

Figure 5–19. Single bus scheme with bus differential relaying.

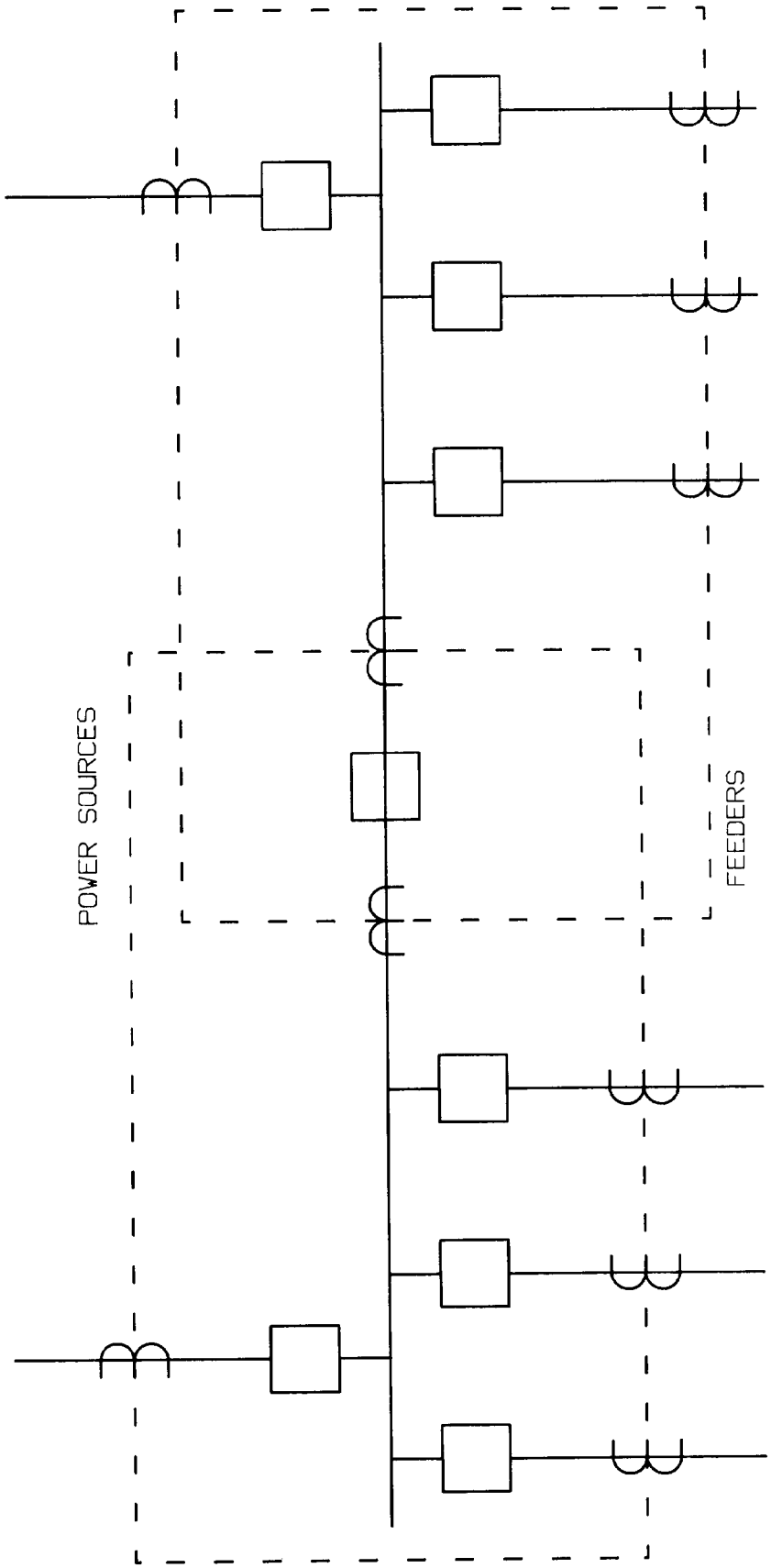

REPRINTED WITH PERMISSION FROM ANSI/IEEE STD 242-1986. IEEE RECOMMENDED PRACTICE FOR PROTECTION AND COORDINATION OF INDUSTRIAL AND COMMERCIAL POWER SYSTEMS. COPYRIGHT 1986.

Figure 5-20. Sectionalized bus scheme with bus differential relaying.

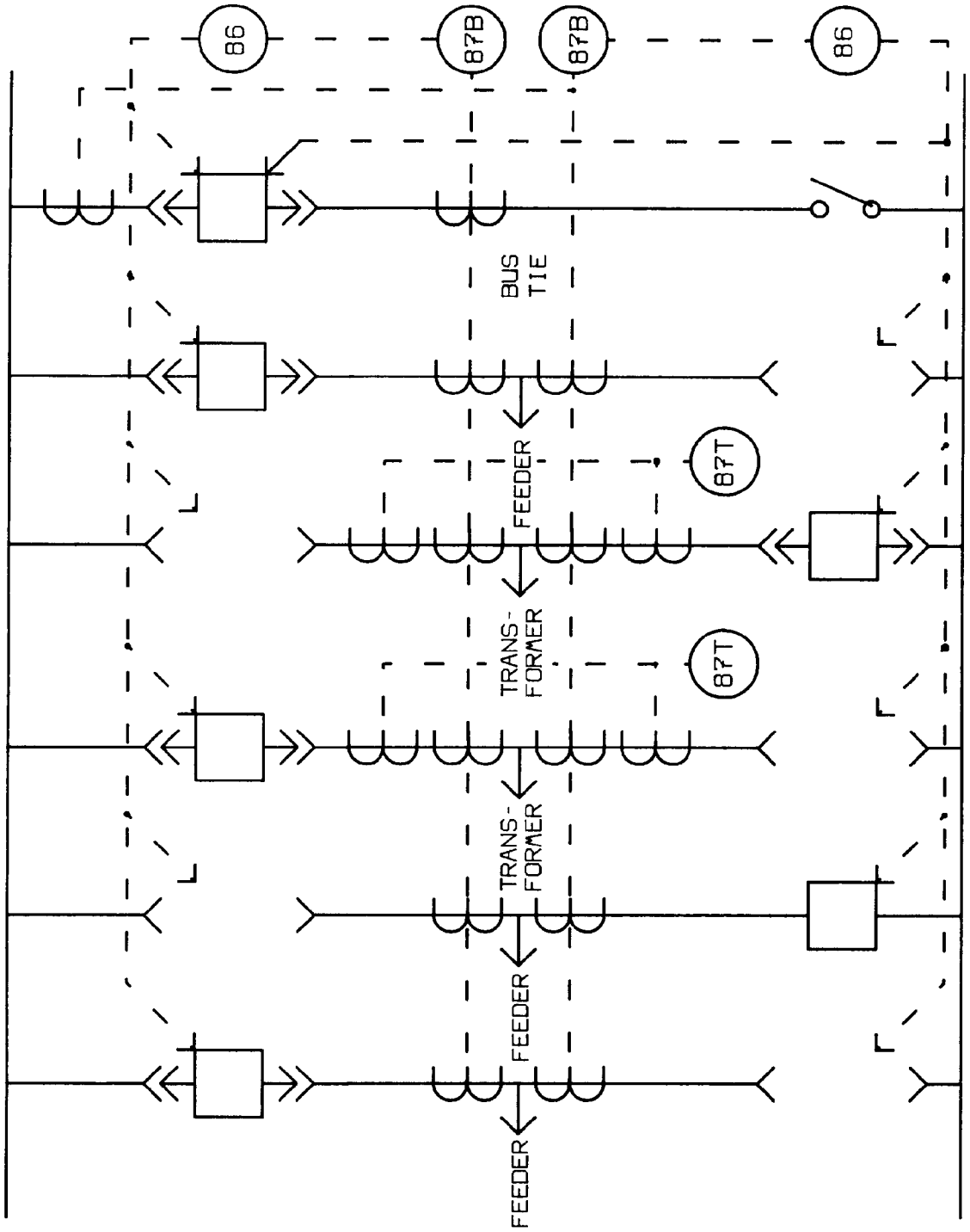

REPRINTED WITH PERMISSION FROM ANSI/IEEE STD 242-1986. IEEE RECOMMENDED PRACTICE FOR PROTECTION AND COORDINATION OF INDUSTRIAL AND COMMERCIAL POWER SYSTEMS. COPYRIGHT 1986

Figure 5-21. Double bus scheme with bus differential relaying.

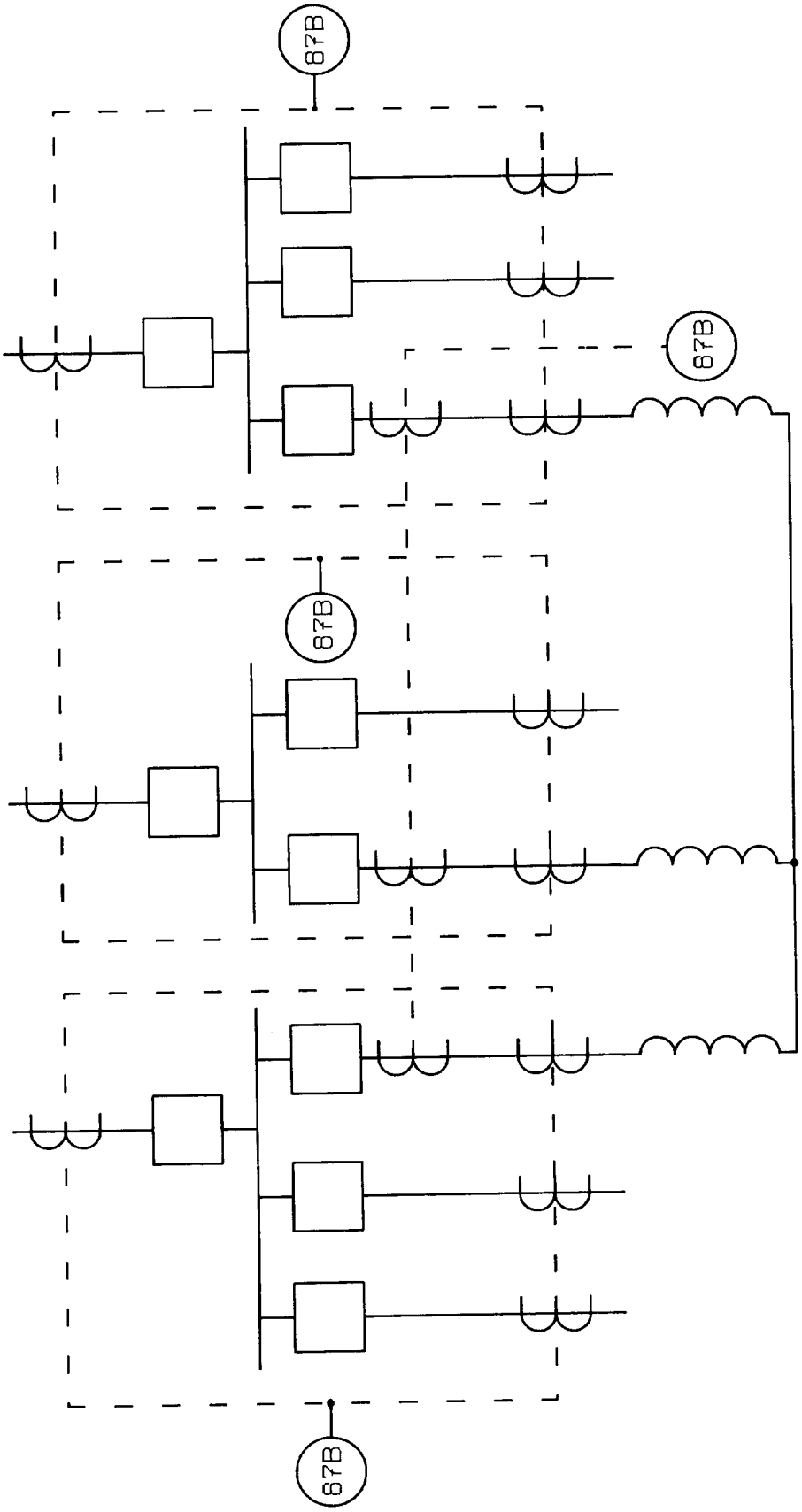

REPRINTED WITH PERMISSION FROM ANSI/IEEE STD 242-1986. IEEE RECOMMENDED PRACTICE FOR PROTECTION AND COORDINATION OF INDUSTRIAL AND COMMERCIAL POWER SYSTEMS. COPYRIGHT 1986.

Figure 5-22. Synchronizing bus scheme with bus differential relaying.

b. Overcurrent protection. On medium-voltage systems, fuses or overcurrent relays should be used. On low-voltage systems, fuses or circuit breakers should be used. Low-voltage switchgear cannot accommodate the CTs required for relay protection.

5-6. Ground-fault protection

Ground-fault protection of medium-voltage and high-voltage systems has been applied successfully for years using ground current relays (device 51G). Ground-fault protection of low-voltage systems is a considerable problem because of the presence and nature of low-level arcing ground faults. Chapter 2 classified ground-fault currents as leakage, arcing, and bolted. Leakage ground-fault current is low magnitude current (milliampere range) generally associated with portable tools and appliances. Leakage ground-fault current presents a hazard to personnel. Personnel protection from leakage ground-fault current is provided by ground-fault circuit interrupters (GFCI) and are required by the NFPA 70 in certain locations. Arcing and bolted ground-fault currents are higher magnitude currents, and are associated with equipment damage rather than personnel hazard. That doesn't mean that arcing and bolted ground-fault currents don't present a personnel hazard. They do. But, the primary concern is with the equipment hazard since arcing and bolted ground-fault currents usually occur only on supervised commercial and industrial electrical systems. Equipment protection from arcing and bolted ground-fault currents is provided by ground-fault protection (GFP) devices. NFPA 70 differentiates between ground-fault protection of personnel and ground-fault protection of equipment.

a. The ground-fault current mechanism. When a short-circuit occurs between line and ground, ground-fault current will flow in the line, through the ground-fault connection (arc), and through the equipment grounding conductor back to the source transformer. The impedance of the Ground-fault current path may be high or low depending on many factors, such as conductor length, arc impedance, materials, and environment. The ground-fault current, therefore, may be high or low.

b. Nature of arcing ground-faults. The arc impedance is by far the most important variable in determining ground-fault current magnitude. As the arc impedance changes, so does the ground-fault current. The arc impedance itself is controlled by many variables. These include the physical length of the arc, arc elongation and blow-out, arc self-clearing and restrike, terminal shifts due to metal flow during the fault, and many others. As a result, ground-fault current may even go up and down as the fault persists. It is very difficult, then, if not impossible, to accurately calculate expected ground-fault current.

c. Tolerable damage curves. Although arcing ground-fault current magnitudes are difficult to determine, it is the arc, not the current, that causes the damage. As stated previously, arcing ground-fault current magnitudes may be below the setting of standard overcurrent devices. However, as the currents go undetected, the arc is releasing large amounts of thermal energy and causing severe equipment damage and perhaps presenting a personnel hazard. It is not really necessary to know the magnitude of arcing ground-fault current to coordinate protective devices. The arcing ground-fault problem becomes one of providing protection against any arcing ground-fault that is likely to occur. Therefore, some damage must be tolerated. NEMA PB2.2 assumes tolerable damage curves are shown in appendix C. These curves can be traced onto the composite time-current characteristic curve of the system under study and made a part of the coordination procedure. Ground-fault protection and coordination are covered in detail by the examples in appendix G.

d. GFP techniques. While numerous variations of ground-fault protection exist, all methods are really just variations of the following:

(1) Residual overcurrent relays are illustrated in figure 5-23. This method is used widely on medium-voltage systems.

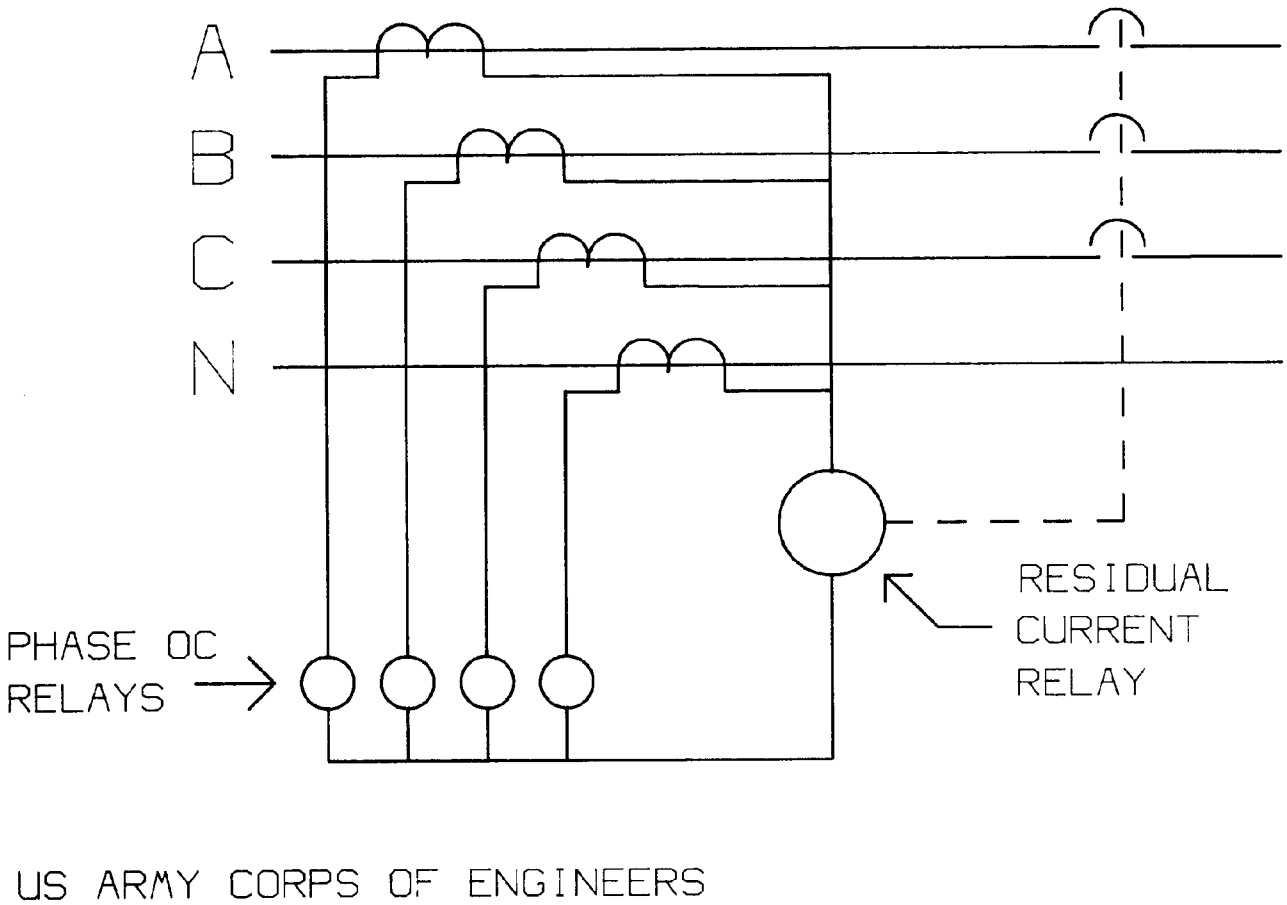

Figure 5-23. Residual or common relay.

(2) The zero-sequence method is illustrated in figure 5-24. This method is widely used on low-voltage systems. The current-carrying conductors are passed through a common current transformer. The equipment grounding conductor must not be included. Under normal conditions, all current flowing to the load must equal all current returning to the source, and the CT is balanced and will not operate the relay. When a ground-fault occurs, some of the outgoing current returns on the equipment grounding conductor outside the CT, thus producing an unbalanced condition and operating the relay. The zero-sequence CT is also called "core-balance CT," "window CT," or "donut CT."

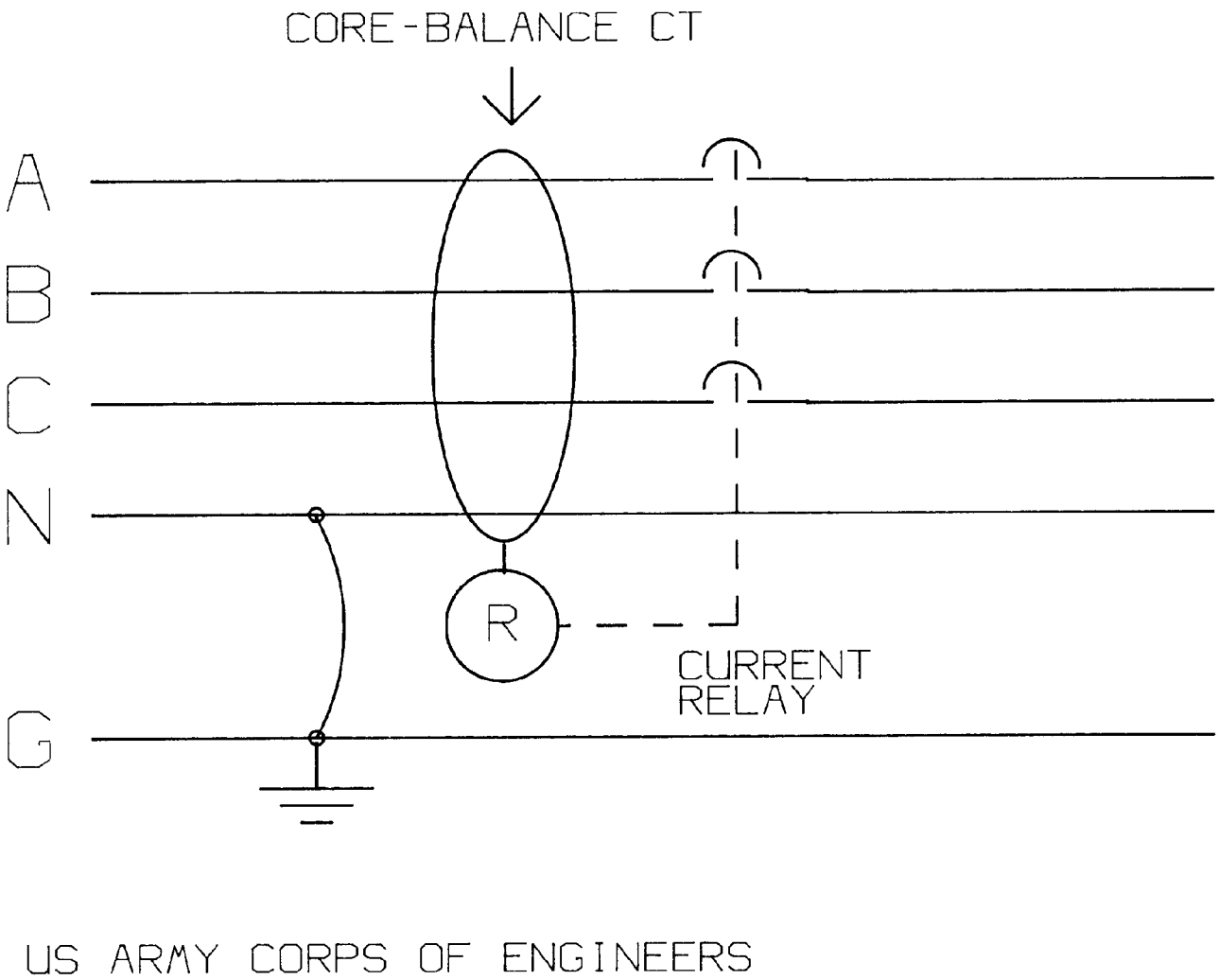

Figure 5-24. Zero-sequence relay.

(3) Ground-return relays are illustrated in figure 5-25. Since all ground-fault current must return to the source via the main bonding jumper (or grounding strap), this is a very convenient place to detect ground-fault current. However, this method is not recommended because multiple paths exist for the return of ground-fault current to the source.

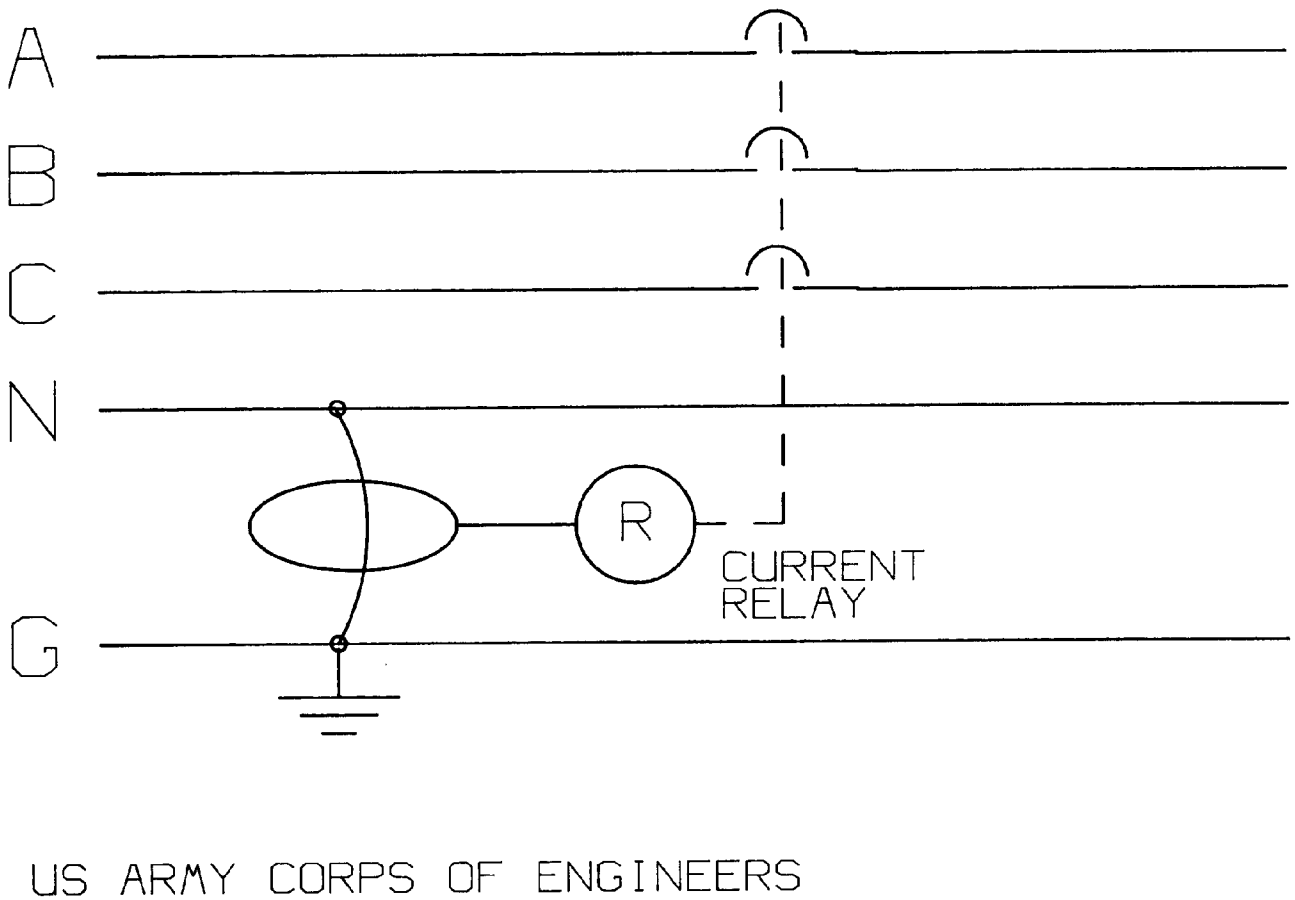

Figure 5-25. Ground return relay.

(4) Differential ground-fault relaying is illustrated in figure 5-26. This method is very effective for main bus protection because of inherent selectivity. The CTs must be closely matched to prevent undesirable tripping for high-level faults downstream of the protected zone.

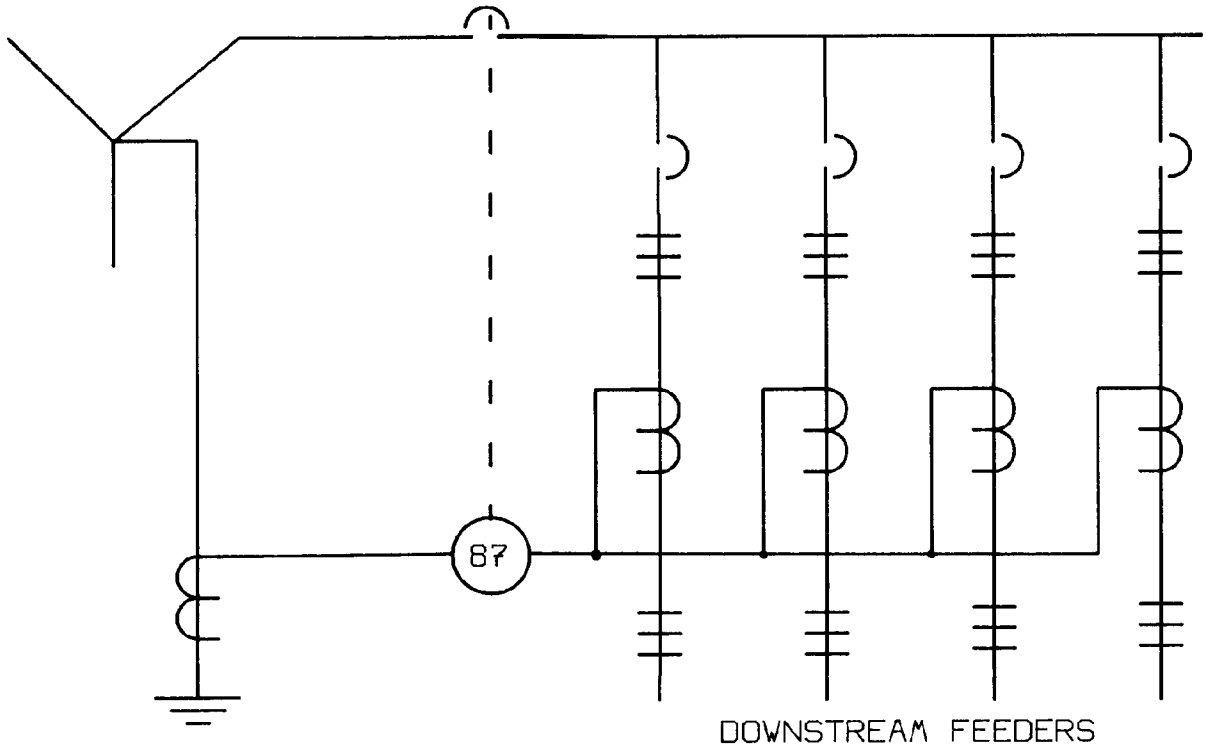

REPRINTED WITH PERMISSION FROM ANSI/IEEE STD 242-1986. IEEE RECOMMENDED PRACTICE FOR PROTECTION AND COORDINATION OF INDUSTRIAL AND COMMERCIAL POWER SYSTEMS. COPYRIGHT 1986 BY IEEE

Figure 5-26. Ground differential relay.

e. Double-ended substations. Three-phase, four-wire, double-ended substations are widely used on low-voltage systems. The application of ground-fault protection to double-ended substations is not without problems. NFPA 70 permits single-point grounding for double-ended substations. In accordance with NFPA 70, the substation transformers must be grounded only at the neutral tie point. Main ground-fault sensors are applied on the neutral of each transformer. All neutral loads associated with either transformer must be connected on the source side of the related ground-fault sensor. The ground-fault sensor for the tie circuit breaker is located directly on the grounding conductor between the neutral tie point and the grounding electrode. Zero-sequence sensing is used on the feeders. When the system is operated with the tie circuit breaker closed, supplementary interlocking is required to compensate for neutral currents in the main sensors. Due to the problems associated with applying ground-fault protection to three- phase, four-wire substations, it is recommended that the manufacturer always be contacted. It is further recommended that only three-phase, three- wire substations be used if at all possible. This will eliminate the ground-fault sensing problems discussed above. A step-down transformer can be used to supply line-to-neutral loads.

f. NEMA damage example. As discussed in this chapter, NEMA PB2.2 damage curves may be used as an alternative to calculating low-voltage arcing ground-fault current values. The NEMA PB2.2 damage curves are included in appendix C. Figure 5-27 shows the time-current characteristic curves of four, series-connected, standard circuit breakers used on a typical low-voltage system. The MAIN CB is rated 2000 amperes, the FDR CB is rated 800 amperes, the SUBFDR CB is rated 225 amperes, and the BRANCH CB is rated 100 amperes. NEMA PB2.2 damage curves for each level are also shown. NFPA 70 requires arcing ground-fault protection only at the service

disconnect (2000A Main CB). Figure 5-28 shows the addition of ground-fault protection at the main only, and adjusted to the maximum setting permitted by NFPA 70 (1200A, 1 second time delay). For bolted ground-faults above about 7000A, the selected setting exceeds the 2000A NEMA damage curve. Also, the GFP setting will not coordinate with the downstream 800A FDR CB. A 2500A or less ground-fault on the 800A FDR CB will trip the main GFP device and shut down the entire system. Figure 5-29 shows improved protection by reducing the instantaneous setting of the 225A SUBFDR CB and the 100A BRANCH CB. Both devices are now below their respective NEMA damage curves, thus providing both short-circuit and ground-fault protection. Figure 5-30 shows further improved protection and coordination by reducing the MAIN GFP current and time settings. Ground-fault protection has also been added to the 800A feeder.

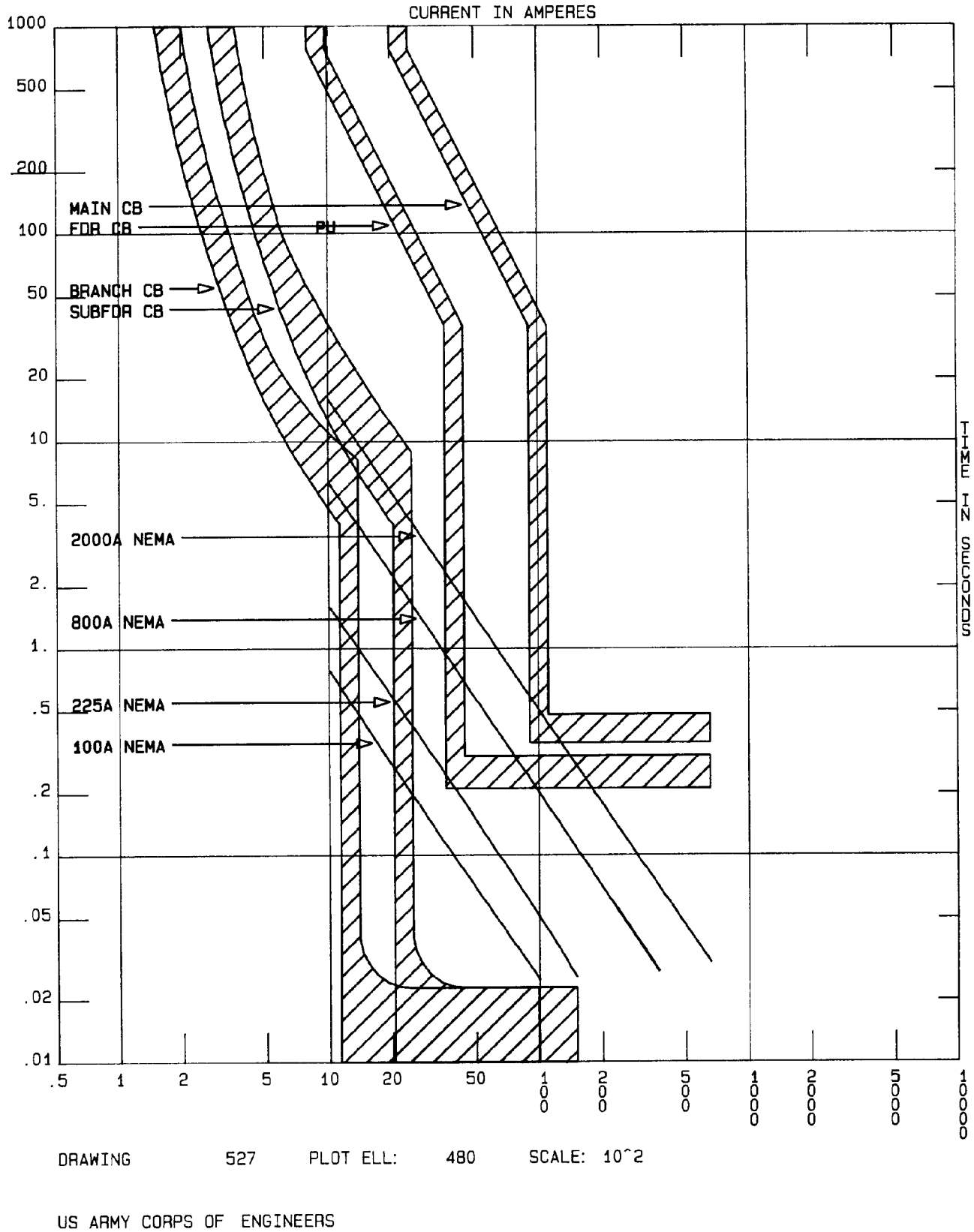

Figure 5-27. Standard overcurrent protection.

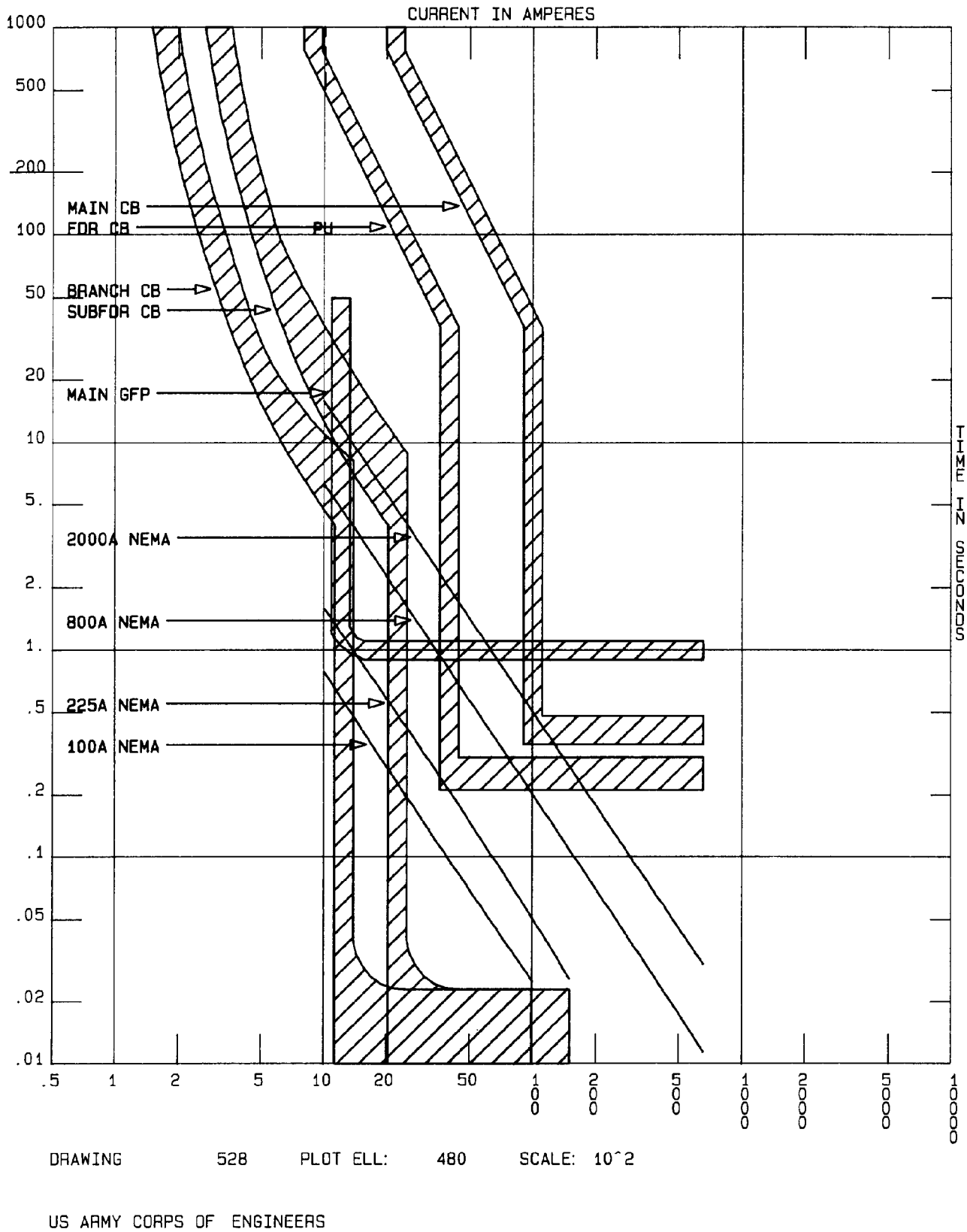

Figure 5-28. Main-only ground-fault protection.

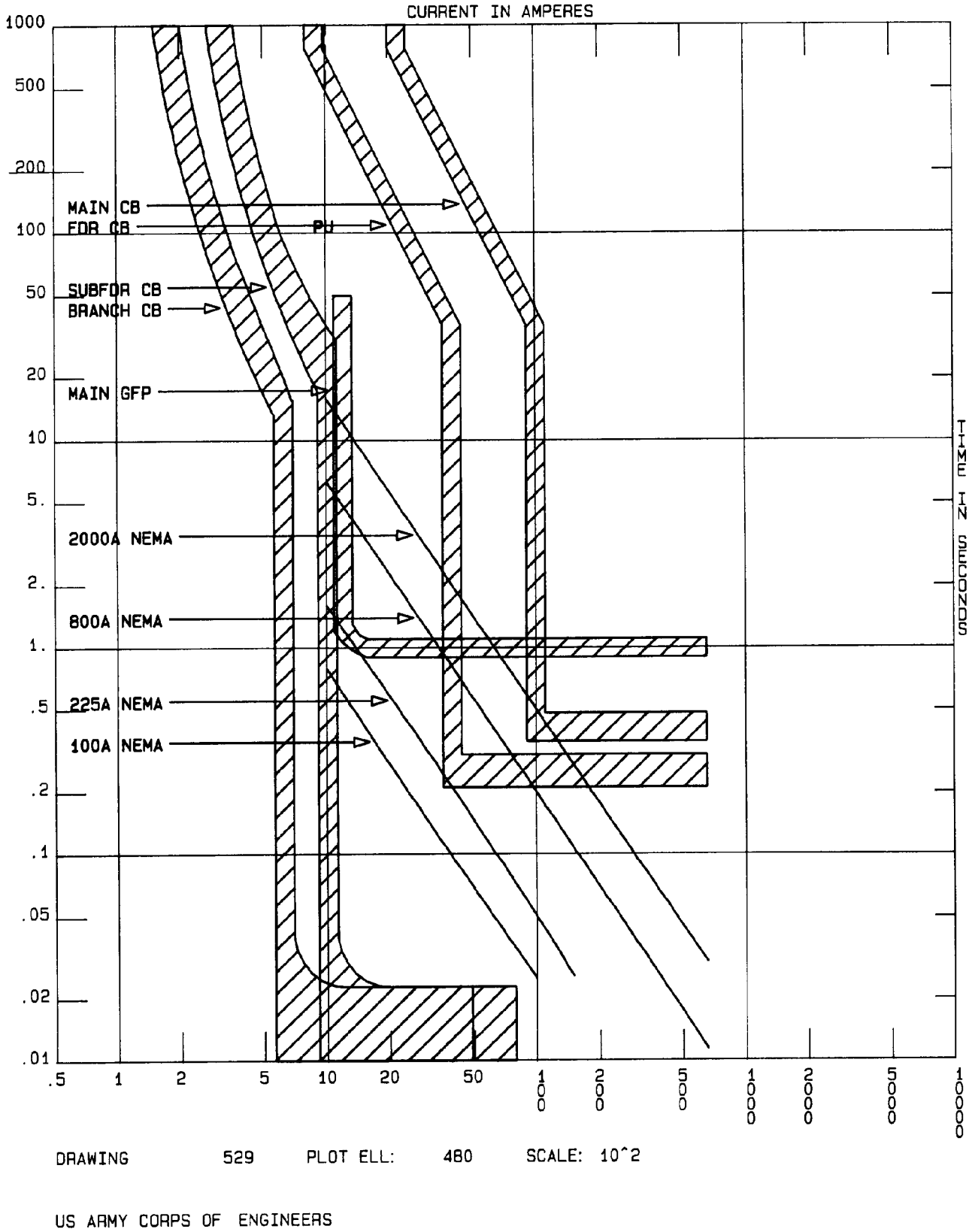

Figure 5-29. Improved ground-fault protection and coordination.

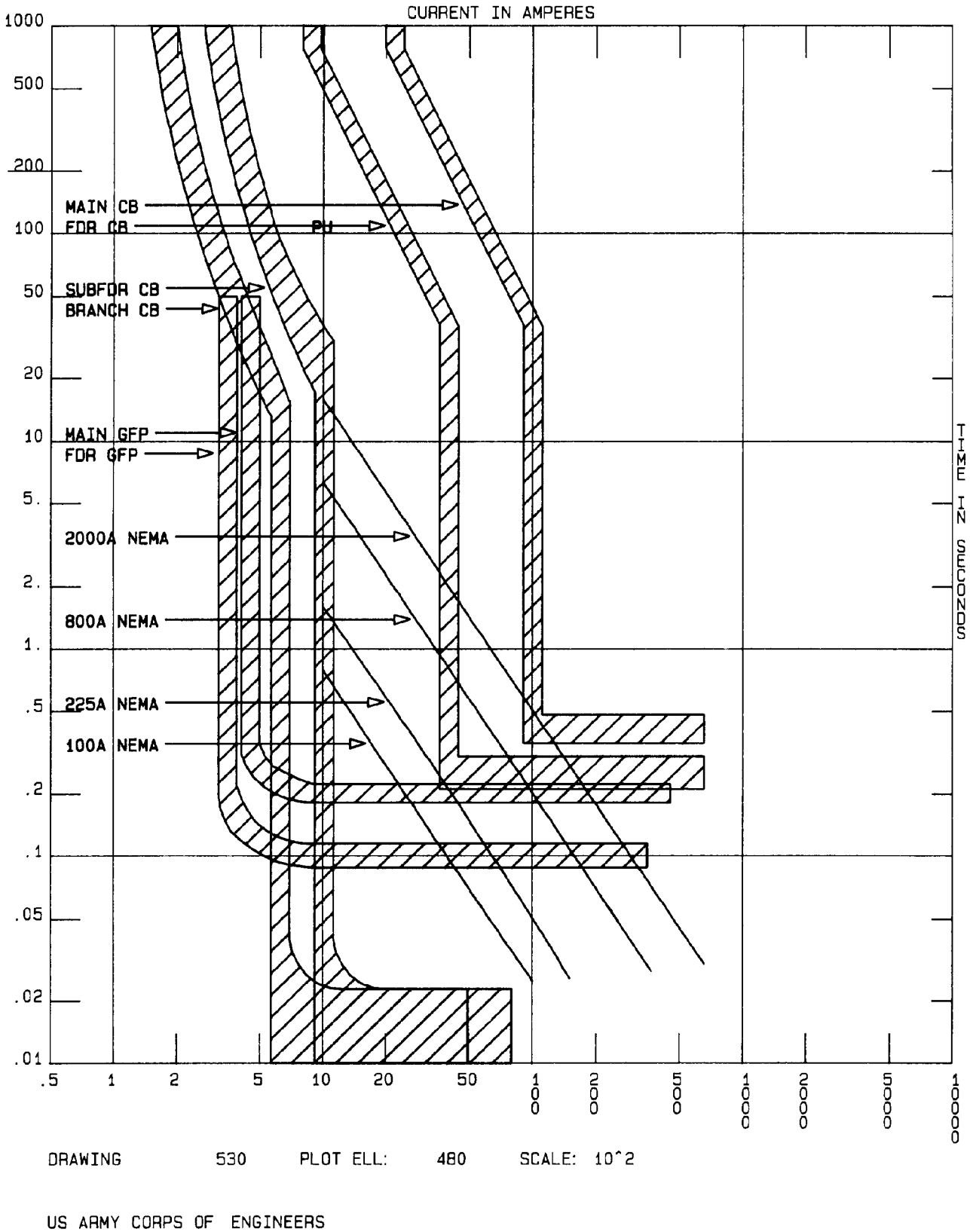

Figure 5–30. Main and feeder ground-fault protection.

5-7. Miscellaneous equipment protection

Miscellaneous electrical equipment, such as lighting fixtures, heaters, convenience outlets, and panelboards must include both overload and short-circuit protection. Such protection is provided by fuses or circuit breakers. High-level arcing and bolted ground-fault protection will normally be provided by the standard overcurrent protective devices (fuse and circuit breakers) on the system. Low-level arcing ground-faults will not be detected by the standard overcurrent devices, however. Although separate arcing ground-fault protection is required only at 480Y/277V services of 1000A and larger by NFPA 70, such protection should be evaluated on a project basis. Ground-fault protection on feeders as well as on the main service disconnect may be the only way to achieving a coordinated system. Ground-fault protection on the main only may be difficult to coordinate with downstream standard devices.

APPENDIX A

REFERENCES

Government Publications

Military Standard.

MIL-STD-461	Requirements for Commercial, Electrical and Electromechanical Equipment (Class C3).

Nongovernment Publications

American National Standards' Institute (ANSI), 1430 Broadway, New York, NY 10018

ANSI/IEEE C37.13	Standard for Low-Voltage Power AC Circuit Breakers, (IEEE, 1981).
ANSI/IEEE C37.14	Standard for Low-Voltage Power DC Circuit Breakers, (IEEE, 1981).
ANSI/IEEE C57.12.00	IEEE Standard General Requirements for Liquid-Immersed Distribution, Power and Regulating Transformers.
ANSI/IEEE C57.12.01	IEEE Standard General Requirements for Dry-Type Distribution and Power Transformers.
ANSI/IEEE C57.91	IEEE Guide for Loading Mineral-Oil-Immersed Overhead and Pad-Mounted Distribution Transformers Rated 500 kVA and Less with 65 ºC or 55 ºC Average Winding Rise.
ANSI/IEEE C57.92	IEEE Guide for Loading Mineral-Oil-Immersed Power Transformers Up to and Including 100 MVA with 55 ºC or 65 ºC Winding Rise.
ANSI/IEEE C57.94	IEEE Recommended Practice for Installation, Application, Operation and Maintenance of Dry-Type General Purpose Distribution and Power Transformers.
ANSI/IEEE C57.109	IEEE Guide for Transformer Through-Fault-Current Duration.
NEMA PB2.2	Application Guide for Ground Fault Protective Devices for Equipment, NEMA, Washington DC, 1983.

APPENDIX B
1
TYPICAL PROTECTIVE DEVICE SETTINGS

B-1. Motor circuits

a. Long time pick-up.

(1) 1.15 times motor FLA times motor service factor for applications encountering 90 percent voltage dip on motor starting.

(2) 1.25 times motor FLA times motor service factor for applications encountering 80 percent voltage dip on motor starting.

b. Long time delay.

(1) Greater than motor starting time at 100 percent voltage and the minimum system voltage.

(2) Less than locked rotor damage time at 100 percent voltage and the minimum system voltage.

(3) On high inertia drives it is not uncommon for the start time to be greater than the locked rotor damage time. Under these circumstances, set the time to permit the motor to start. Supplemental protection should be added for locked rotor protection. One example of this is a speed switch set at 25 percent of rated speed tripping through a timer to trip if the desired speed has not been reached in a predetermined time.

c. Instantaneous pick-up.

(1) Not less than 1.7 times motor LRA for medium-voltage motors.

(2) Not less than 2.0 times motor LRA for low-voltage motors.

d. Ground-fault protection.

(1) Minimum pick-up and minimum time delay for static trip units.

(2) Core-balance CT and 50 relay set at minimum for medium-voltage, low-resistance grounded systems.

(3) Residually connected CT and 50/51 relay for medium-voltage, solidly-grounded systems. Minimum tap and time dial equals 1 for 51 relay. Minimum tap (not less than SA) for 50 relay.

B-2. Load center (LC) feeders breakers with static trip units

a. Long time pick-up set at 1.25 times LC full-load rating.

b. Long time delay set greater than duration of cold load inrush or motor starting time. (Typically 20 seconds at four times long time delay).

c. Short time pick-up set 1.25 times largest downstream protective device.

d. Short time delay set at minimum.

B-3. Load center (LC) tie breakers with static trip units

a. Long time pick-up set at 100 percent of transformer FLA.

b. Long time delay set to coordinate with largest feeder breaker and cold load inrush.

c. Short time pick-up set 1.25 times largest feeder short time or instantaneous setting or cold load inrush.

d. Short time delay set at intermediate.

B-4. Load center (LC) main breakers

a. Single-ended substations. Set same as tie breaker but with long time pick-up set at 1.25 times transformer FLA.

b. Three-wire, double-ended substations with static trip units.

(1) Long time pick-up set at 1.25 times transformer FLA.

(2) Long time delay set to coordinate with tie breaker.

(3) Short time pick-up set at 1.25 times tie breaker short time pick-up.

(4) Short time delay set at maximum.

(5) Neutral ground current transformer relay long inverse time plus high drop out instantaneous working into a timer.

(6) Ground-fault long time pick-up set at 1.25 times largest feeder standard long time device, but not greater than 1200A.

(7) Ground-fault long time delay set to coordinate with longest feeder standard long time device.

(8) Ground-fault short time pick-up set at 1.25 times largest feeder standard short time device but not greater than 3000A.

(9) Ground-fault short time delay set 0.3 seconds longer than main breaker short time delay but not greater than 1 second.

c. Four-wire, double-ended substations with static trip units.

(1) Standard neutral ground relay and static trip unit ground relay will not operate correctly. Usually the magnitude of 277V load is so small that it can be provided from a small 480-480Y/ 277V isolation transformer fed from a load center.

(2) It is strongly recommended that double-ended four-wire systems not be used due to the complications and special ground relaying techniques required.

B-5. Medium-voltage load center (LC) feeder breakers

a. Relay.

(1) Long time pick-up set at 1.25 times the reflected current setting of main low side static trip units.

(2) Long time delay set to coordinate with the reflected main low side static trip units.

(3) High drop out instantaneous pick-up set at 1.25 times main low side static trip short time pick-up reflected current.

(4) High drop out time set 0.3 seconds longer than main low side static trip short time delay.

(5) Instantaneous set at 1.7 times maximum 1£ transformer let through fault current.

(6) Ground relaying same as motor circuits.

b. Medium-voltage main and tie breaker are set with the same philosophy as load center main and tie breakers. Relays are the same as the load center feeders without an instantaneous element. Short time pick-up should be 1.15 times the largest feeder instantaneous element with a time delay of 0.3 seconds on the tie breaker. The main breakers will he set to coordinate with the tie. Ground relaying will be from residually connected 51N relays.

APPENDIX C

TYPICAL TIME-CURRENT CHARACTERISTIC CURVES

C-1. Time-current characteristic curves

This appendix contains time-current characterstic curves of overcurrent protective devices typically used on electrical distribution systems. Figures C-1 through C-5 illustrate motor overload relay, circuit breaker, ground-fault, protective relay, and fuse curves.

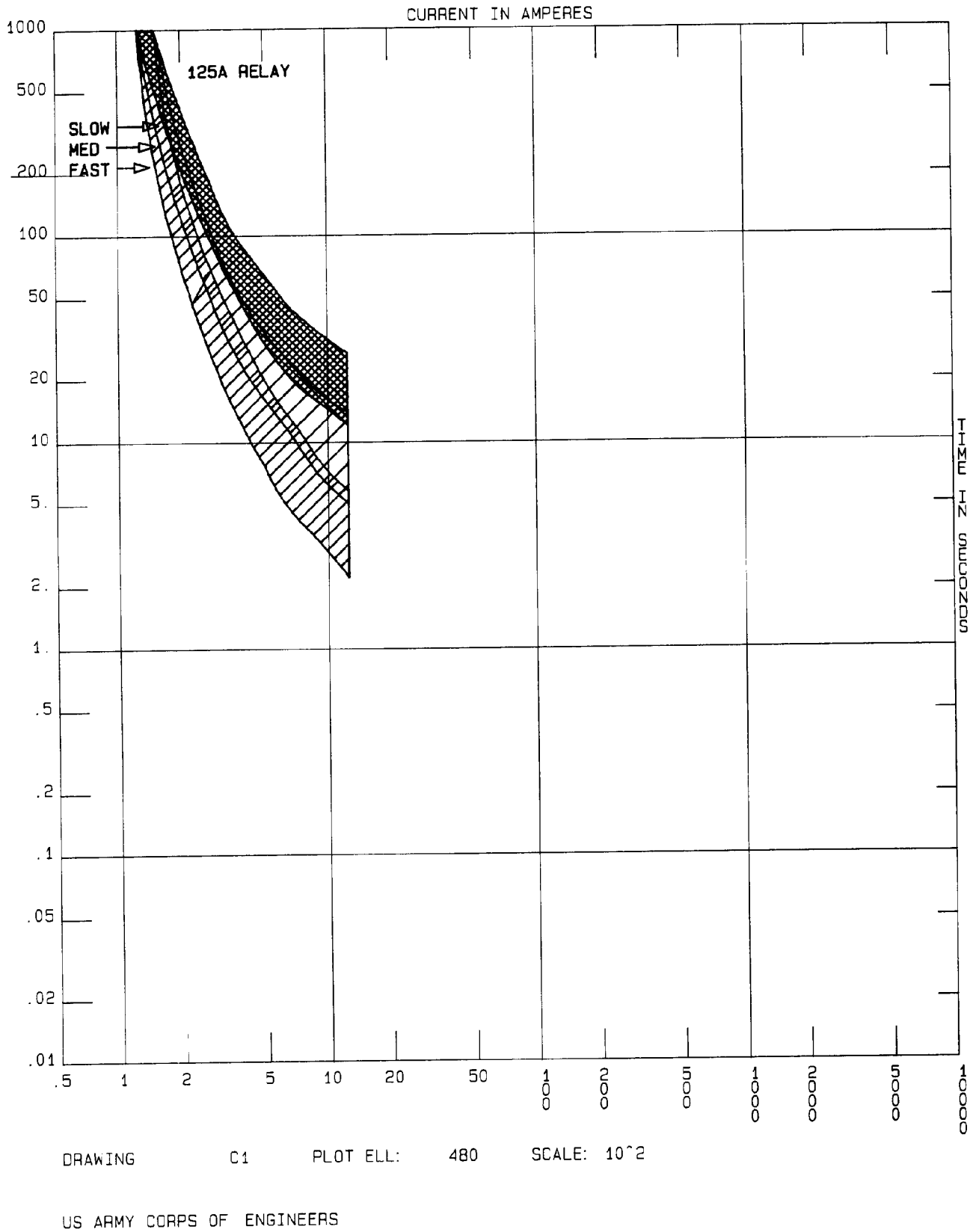

Figure C–1. Time-current characteristic curves for typical motor overload relay.

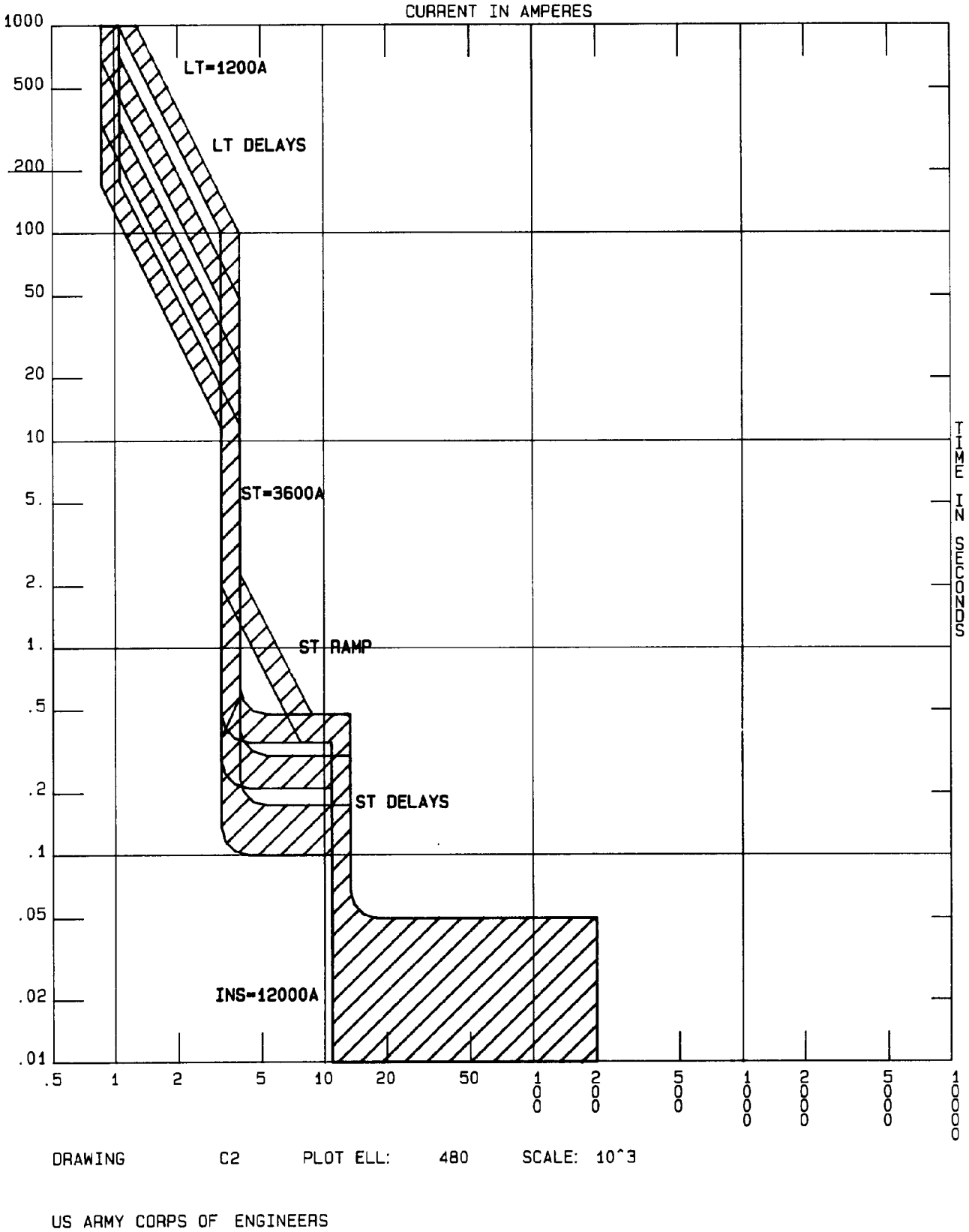

Figure C-2. Time-current characteristic curve for typical solid state circuit breaker.

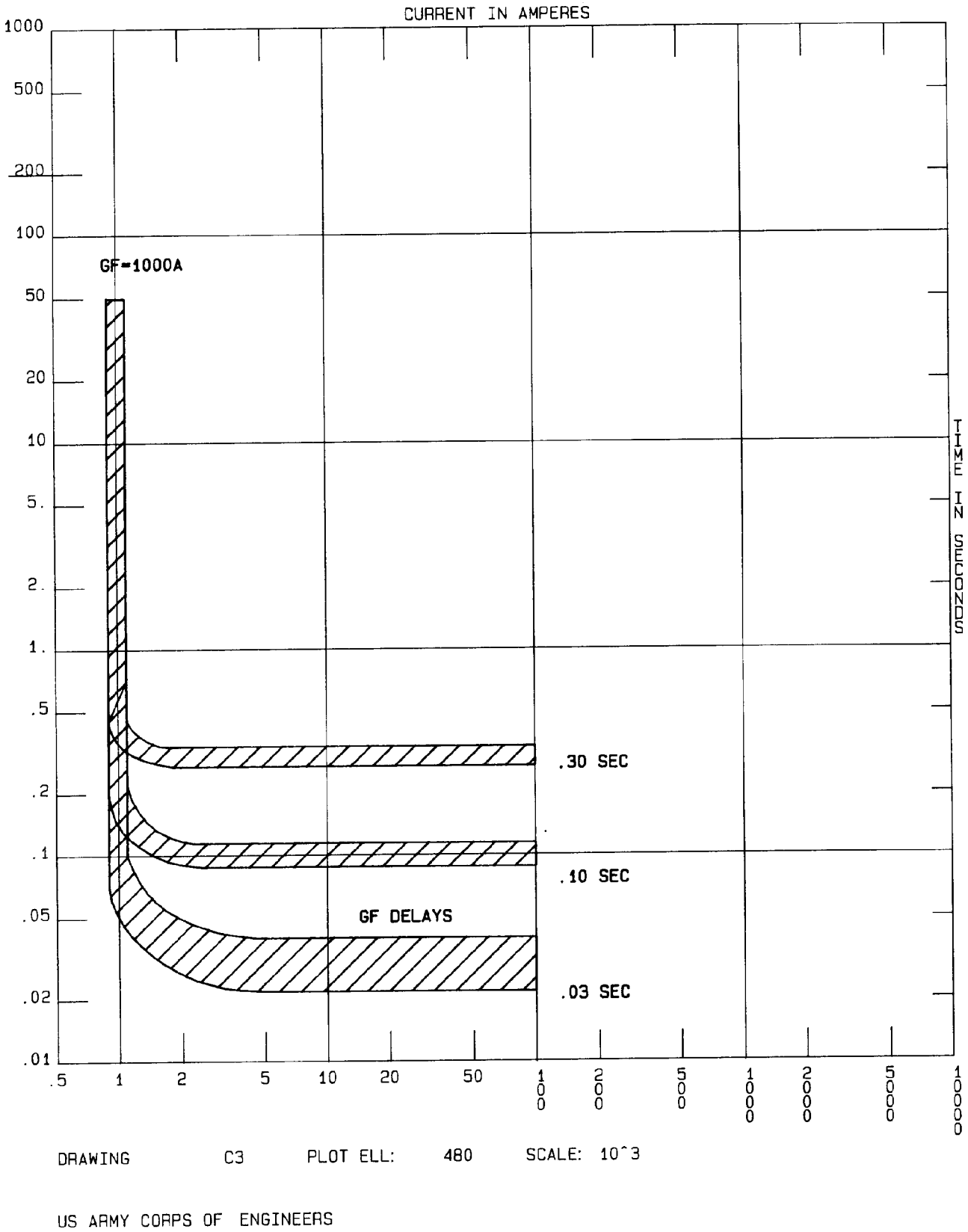

Figure C-3. Time-current characteristic curve for typical ground fault attachment.

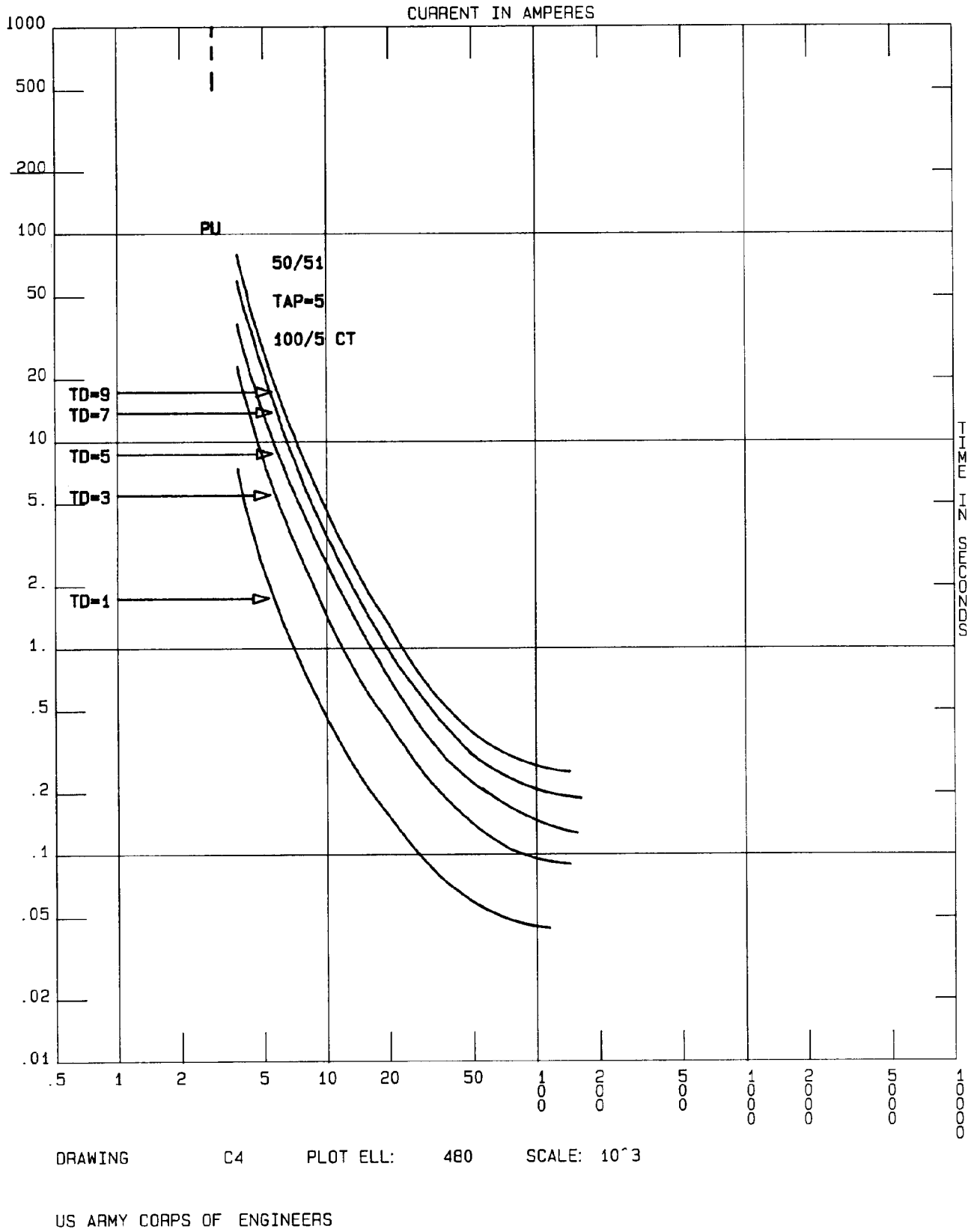

Figure C-4. Time-current characteristic curve for typical protective relay (50/51).

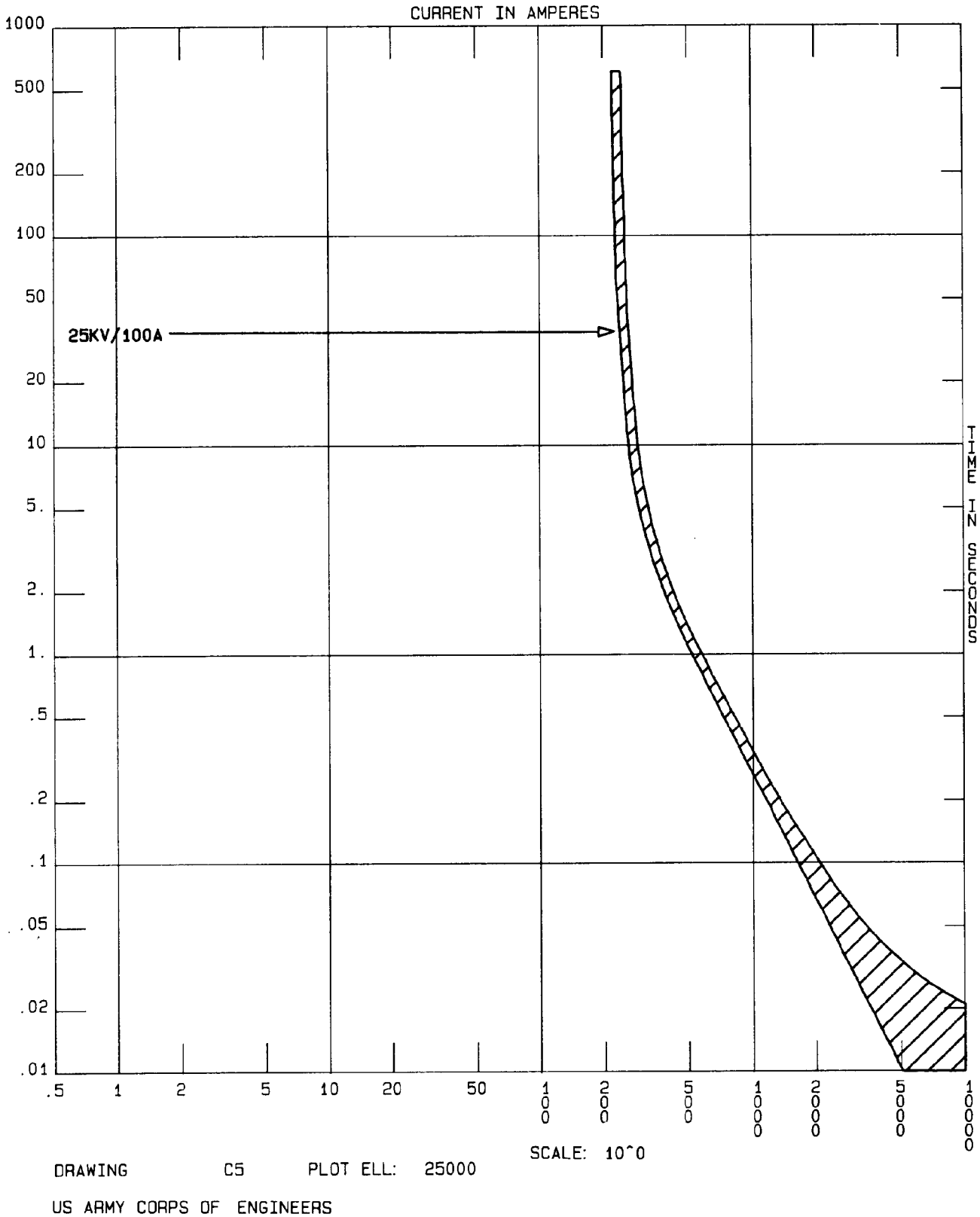

Figure C-5. Time-current characteristic curve for typical medium voltage fuse.

C-2. NEMA PB2.2 damage curves

Figures 0-6 and 0-7 illustrate ground-fault damage curves recommended by NEMA PB2.2.

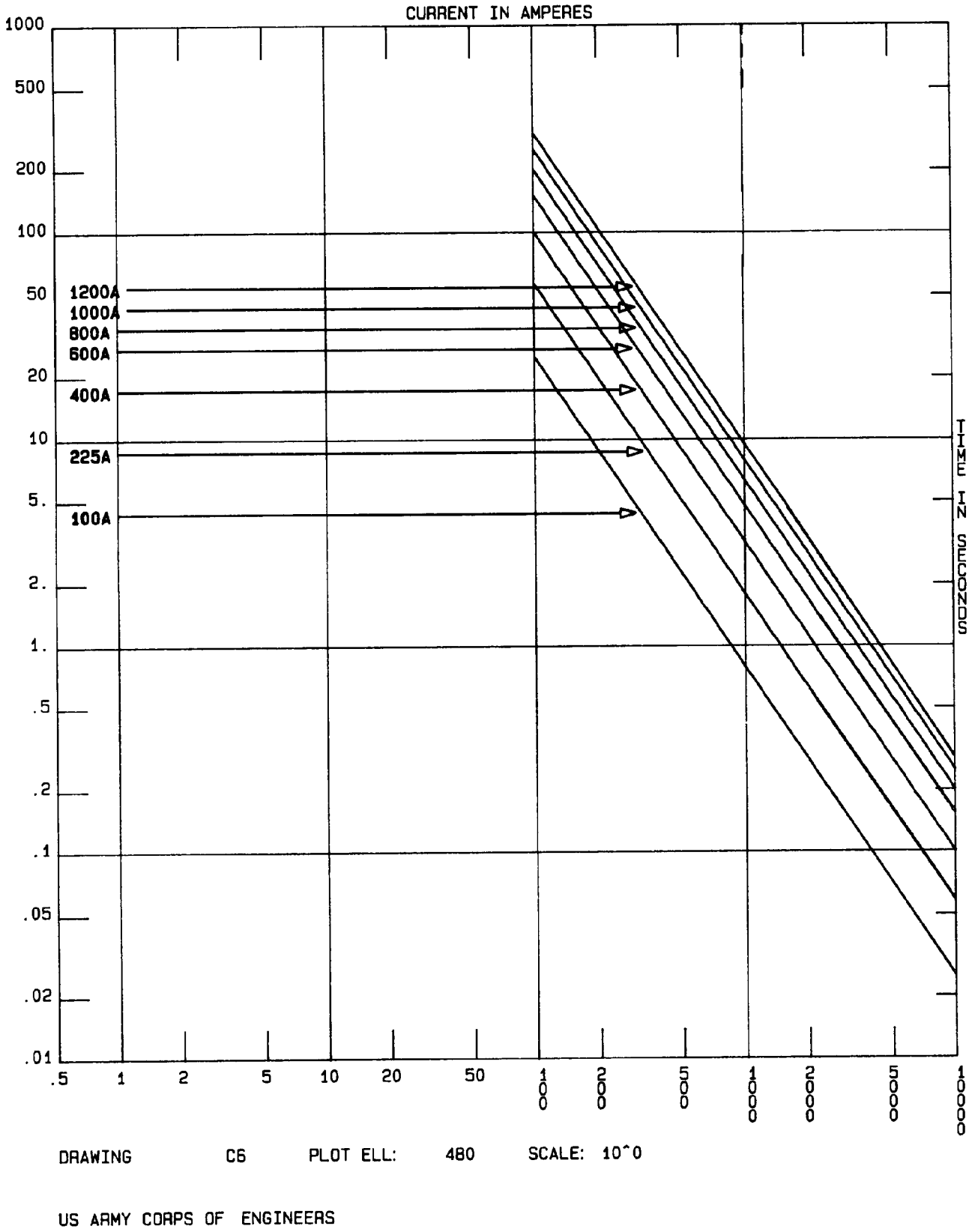

Figure C-6. NEMA damage curves (through 1200A).

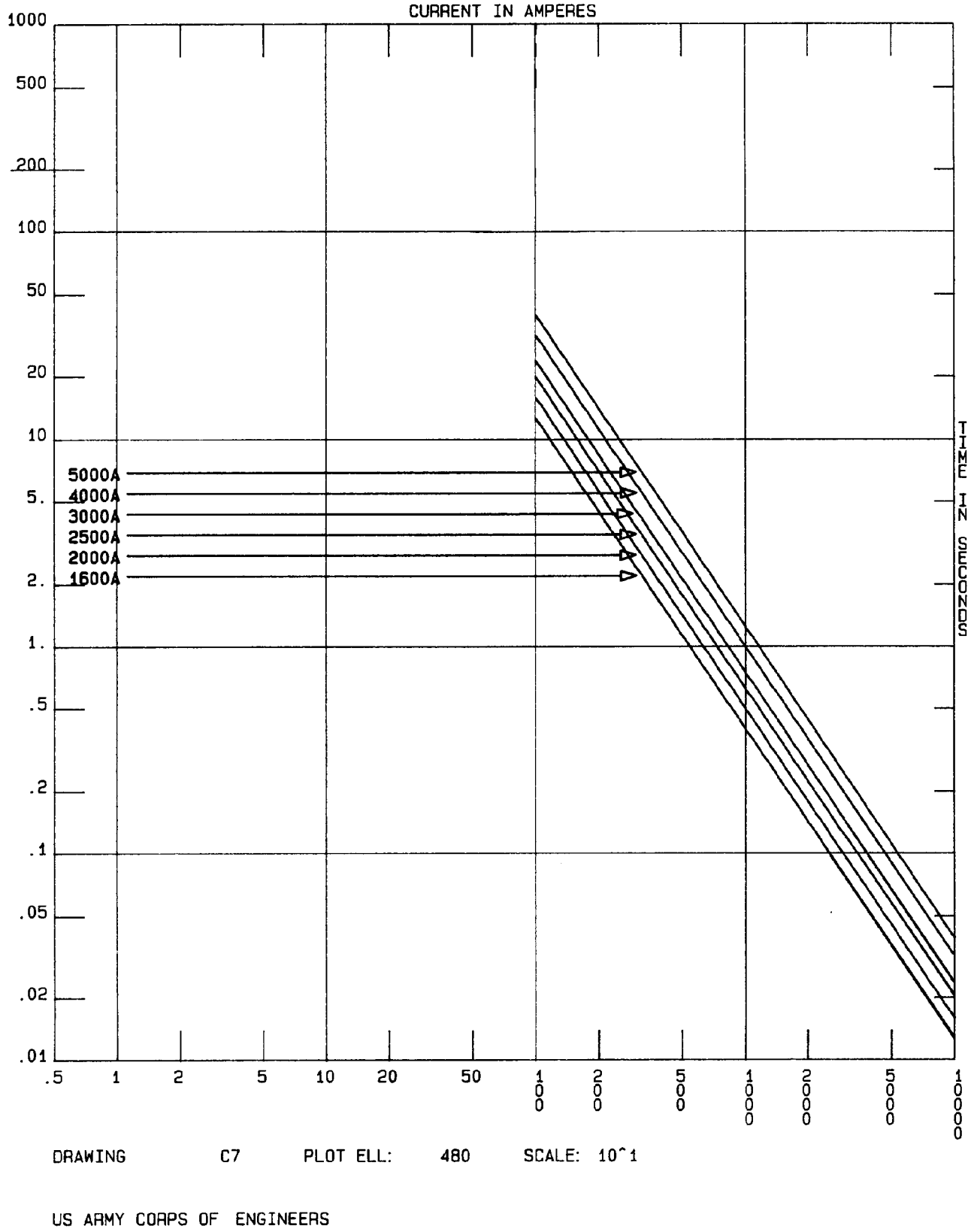

Figure C-7. NEMA damage curves (through 5000A).

APPENDIX D

TYPICAL DEVICE AND EQUIPMENT RATINGS

D-1. Molded Case Circuit Breaker Ratings

a. Ampere ratings. Standard ampere ratings for inverse time circuit breakers are included in NFPA 70 as follows: 15, 20, 25, 30, 35, 40, 45, 50, 60, 70, 80, 90, 100, 110,125, 150, 175, 200, 225, 250, 300, 350, 400, 450, 500, 600, 700, 800, 1000, 1200, 1600, 2000, 2500, 3000, 4000, 5000, and 6000 amperes.

b. Voltage ratings. For ac distribution systems, molded case circuit breakers are available with one or more of the following voltage ratings: 120, 120/240, 240, 277, 480Y/277, 480, and 600 volts. For specific applications, voltage ratings to 1000 volts ac are available.

(1) For dc application, molded-case circuit breakers are available with one or more of the following voltage ratings: 125, 125/250, 250, 500, or 600 volts dc.

(2) For specific application or other voltage ratings, consult the manufacturer.

c. Interrupting ratings. Typical ac molded-case circuit breaker interrupting ratings in rms symmetrical amperes are as follows:

5,000	22,000	50,000	125,000
7,500	25,000	60,000	150,000
10,000	80,000	65,000	200,000
14,000	35,000	70,000	
18,000	42,000	85,000	
20,000	45,000	100,000	

(1) Typical dc interrupting ratings are 5,000, 10,000, and 20,000 amperes.

(2) The use of two-pole circuit breakers in three-phase, corner-grounded delta applications requires special considerations. Unless the breaker is marked and rated for this application, consult the manufacturer.

Table D-1. Low Voltage Fuse Ratings

UL Class	*Voltage*	*Current*	*Time Delay*	*Current Limitting*	*Interrupting Rating*	*Application*
L	600V	601-6000A	NTD	Yes	200kA	1
J	600V	0-600A	NTD	Yes	200kA	High Interrupting capacity in small package.
K1	600V	0-600A	TD	High	50kA	2
	250V		NTD		100kA	
					200kA	
K5	600V	0-600A	TD	Moderate	50kA	2
	250V		NTD		100kA	
					200kA	
RK1	600V	0-600A	TD	High	200kA	
	250V		NTD			
RK5	600V	0-600A	TD	Moderate	200kA	
	250V		NTD			
H	600V	0-600A	NTD	No	10kA	Residential use only. Inadequate for industrial or commercial.
	V250V					

[1] Coordination with upstream devices is complicated by the fact that some manufacturers offer time delay Class L fuses (10 seconds at 500 percent). If time delay fuse is used for service or main feeder protection, coordination with utility transformer primary fuse is almost impossible.

[2] Class K fuses cannot be labeled as current limiting because they are interchangeable with Class H fuses.

Table D-2. Distribution Fuse Cutouts

Voltage, kV	Current, A	Interrupting, kA (sym)
4.8	100, 200	12.5
7.2	100, 200	15.0
14.4	100, 200	13.2
25.0	100	8.0
34.5	100	5.0

Table D-3. Expulsion-Type Power Fuses

Voltage, kA	Current, A	Interrupting, kA (sym)
8.3	100, 200, 300, 400	12.5
15.5	100, 200, 300, 400	16.0
25.8	100, 200, 300, 400	20.0
38.0	100, 200, 300, 400	20.0
48.3	100, 200, 300, 400	25.0
72.5	100, 200, 300, 400	20.0
121.0	100, 200	16.0
145.0	100, 200	12.5
169.0	100, 200	12.5

Table D-4. Boric Acid-Type Power Fuses

Voltage, kV	Current, A	Interrupting, kA (sym)
17.0	200	14.0
27.0	200	12.5
38.0	100, 200, 300	6.7, 17.5, 33.5

Table D-4. Boric Acid-Type Power Fuses—Continued

Voltage, kV	Current, A	Interrupting, kA (sym)
48.3	100, 200, 300	5.0, 13.1, 31.5
72.5	100, 200, 300	3.35, 10.0, 25.0
121.0	100, 250	5.0, 10.5
145.0	100, 250	4.2, 8.75

Table D-5. Current-Limiting Power Fuses

Voltage, kV	Current, A	Interrupting, kA (sym)
2.75	225, 450, 750, 1350	50.0, 50.0, 40.0, 40.0
2.75/4.76	450	50.0
5.5	225, 400, 750, 1350	50.0, 62.5, 40.0, 40.0
8.3	150, 250	50.0, 50.0
15.5	65, 100, 125, 200	85.0, 50.0, 85.0, 50.0
25.8	50, 100	35.0, 35.0
38.0	50, 100	35.0, 35.0

Table D-6. Typical Tap Ranges and Settings of Time-Overcurrent Relays

Tap Range	Tap Settings
0.5–2.5 (OR 0.5–2)	0.5, 0.6, 0.8, 1.0, 1.2, 1.5, 2.0, 2.5
0.5–4	0.5, 0.6, 0.7, 0.8, 1.0, 1.2, 1.5, 2.0, 2.5, 3.0, 4.0
1.5–6 (OR 2–6)	1.5, 2, 2.5, 3, 3.5, 4, 5, 6
4–16 (OR 4–12)	4, 5, 6, 7, 8, 10, 12, 16
1–12	1.0, 1.2, 1.5, 2.0, 2.5, 3.0, 3.5, 4, 5, 6, 7, 8, 10, 12

Table D-7. Typical Reactances of Three-Phase Synchronous Machines

	Turbine-generators					
	2-pole		4-pole		Salient-pole generators	
	Conventional cooled	Conductor cooled	Conventional cooled	Conductor cooled	With dampers	Without dampers
Xd	1.76	1.95	1.38	1.87	1	1
Xd'	0.21	0.33	0.26	0.41	0.32	0.32
Xd"	0.13	0.28	0.19	0.29	0.2	0.30

APPENDIX E

PARTIAL RELAY DEVICES NUMBERS LIST

Number	*Relay Functions*
2	Time-delay starting or closing relay
3	Checking or interlocking relay
6	Starting circuit breaker
8	Control power-disconnecting device
12	Overspeed device
14	Underspeed device
15	Speed- or frequency-matching device
18	Accelerating or decelerating device
19	Starting-to-running transition contactor
21	Distance relay
23	Temperature-control device
25	Synchronizing or synchronism-check device
27	Undervoltage relay
30	Annunciator relay
32	Directional power relay
36	Polarity device
37	Undercurrent or underpower relay
40	Field relay
41	Field circuit breaker
42	Running circuit breaker
43	Manual transfer or selector device
46	Reverse-phase or phase-balance current relay
47	Phase-sequence voltage relay
48	Incomplete-sequence relay
49	Machine or transformer thermal relay
50	Instantaneous overcurrent or rate-of-rise relay
51	AC time overcurrent relay
52	AC circuit breaker
55	Power-application relay
56	Field-application relay
59	Overvoltage relay
60	Voltage- or current-balance relay
62	Time-delay stopping or opening relay
64	Ground protective relay
67	AC directional overcurrent relay
68	Blocking relay
69	Permissive control device
72	DC circuit breaker
74	Alarm relay
76	DC overcurrent relay
78	Phase-angle measuring or out-of-step protective relay
79	AC reclosing relay
81	Frequency relay
82	DC reclosing relay
85	Carrier or pilot-wire receiver relay
86	Locking-out relay
87	Differential protective relay
91	Voltage directional relay
92	Voltage and power directional relay
94	Tripping or trip-free relay

APPENDIX F

REPRESENTATIVE PROTECTIVE DEVICE OPERATING TIMES

ESTIMATED CLEARING TIMES OF PROTECTIVE DEVICES *

Table F-1. Relayed Circuit Breakers, 2.4-13.8kV

	Plunger, Instantaneous	*Induction Instantaneous*	*Induction Inverse-Time*
Relay times, cycles	0.25–1	0.5–2	6–6000
Circuit breaker interrupting time, cycles	3–8	3–8	3–8
Total time, cycles	3.25–9	3.5–10	9–6000

Table F-2. Power Air Circuit Breakers, Below 600V

	Frame Size	*225–600A* / *1600–4000A*
Instantaneous, cycles	2–3	3
Short time, cycles	10–30	10–30
Long time, seconds	over 100	.....
Ground fault, cycles	10–30	10–30

* Reprinted with permission from ANSI/IEEE Standard 242-1986, IEEE Recommended Practice for Protection and Coordination of Industrial and Commercial Power Systems, copyright 1986 by IEEE.

Table F-3. Molded-Case Circuit Breakers, Below 600V

	Frame Size	
	100A	*225–1200A*
Instantaneous, cycles	1.1	1.5
Long time, seconds	over 100	

Table F-4. Medium- and High-voltage Fuses

High current	0.25 cycles (for current-limiting fuses operating in their current-limiting range) 1.0 cycle (for power fuses at maximum current)
Low current	600 s (for E-rated fuses operating at 2X nominal rating: other ratings are available with different times at 2X nominal rating)

Table F-5. Low-Voltage Fuses

High current	0.25 cycles (in current-limiting range)
Low current	1000 seconds (at 1.35 to 1.5 times nominal rating)

APPENDIX G

COORDINATION EXAMPLES

G-1. General

This appendix contains nine coordination exampies. Figure G-1 shows the general arrangement of the electrical system examined by these examples. As shown in figure G-1, a 115kV double-ended commercial power substation transforms the incoming 115kV down to 12.47kV. Two, three-phase, 12.47kV aerial distribution lines supply 480V industrial facility loads through distribution transformers connected delta primary and solidly-grounded wye secondary. Two, impedance-grounded, on-site generators, rated 1250kVA at 12.47kV, are connected to the 15kV switchgear bus. A wye-delta, 12.47kV-4.l6kV transformer is shown supplying a 500Hp, 4000V motor using reduced-voltage motor control. Figure G-2 shows a detailed view of the various loads supplied by 15kV switchgear feeder number 4. Figure G-3 shows a detailed view of the various loads supplied by 15kV switchgear feeder number 7. A wide variety of protective equipment types is shown to illustrate the diversity of protective device applications and coordination requirements. Such a combination of protective devices might not normally be found in practice. Figure G-2 illustrates the application of low-voltage fuses, medium-voltage fuses, and motor circuit protectors. Figures G-3 illustrates the application of low-voltage circuit breakers and medium-voltage fuses. Other examples, using figure G-1, illustrate the application of medium-voltage motor protection, medium-voltage generator protection, and medium-voltage system protection using circuit breakers and relays. The following list summarizes the examples included in this appendix:

Example 1— Low-voltage motor protection using inverse-time circuit breakers.

Example 2 — Low-voltage motor protecting using motor circuit protectors (MCP).

Example 3 — Low-voltage motor protection using fused switches.

Example 4 — Low-voltage ground-fault protection.

Example 5 — Impedance diagram and short-circuit calculations.

Example 6 — Medium-voltage transformer protection using fuses.

Example 7 — Medium-voltage motor protection using reduced-voltage motor control.

Example 8 — Medium-voltage generator protection.

Example 9 — Phase overcurrent protection using protective relays.

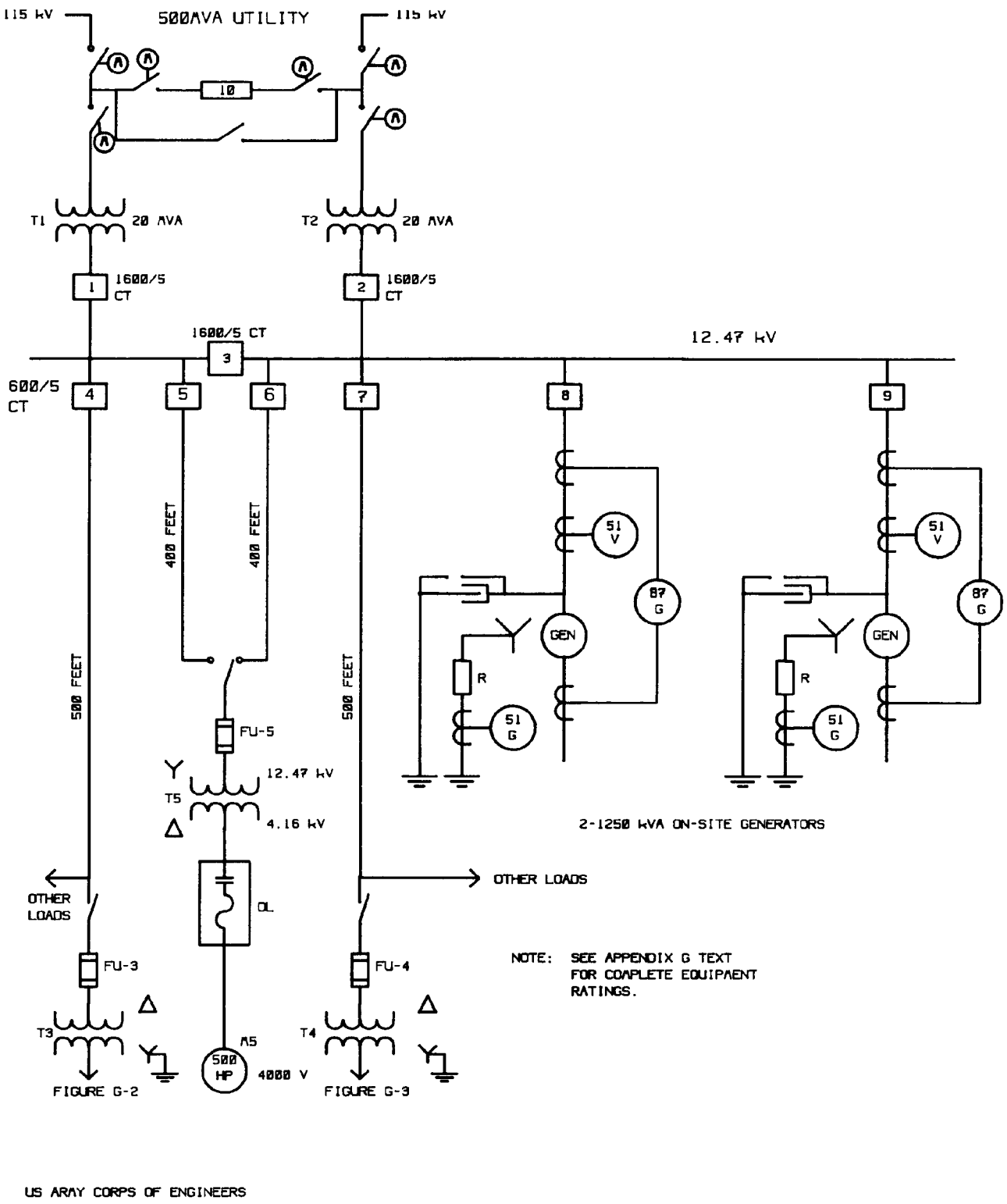

Figure G-1. Example electrical system.

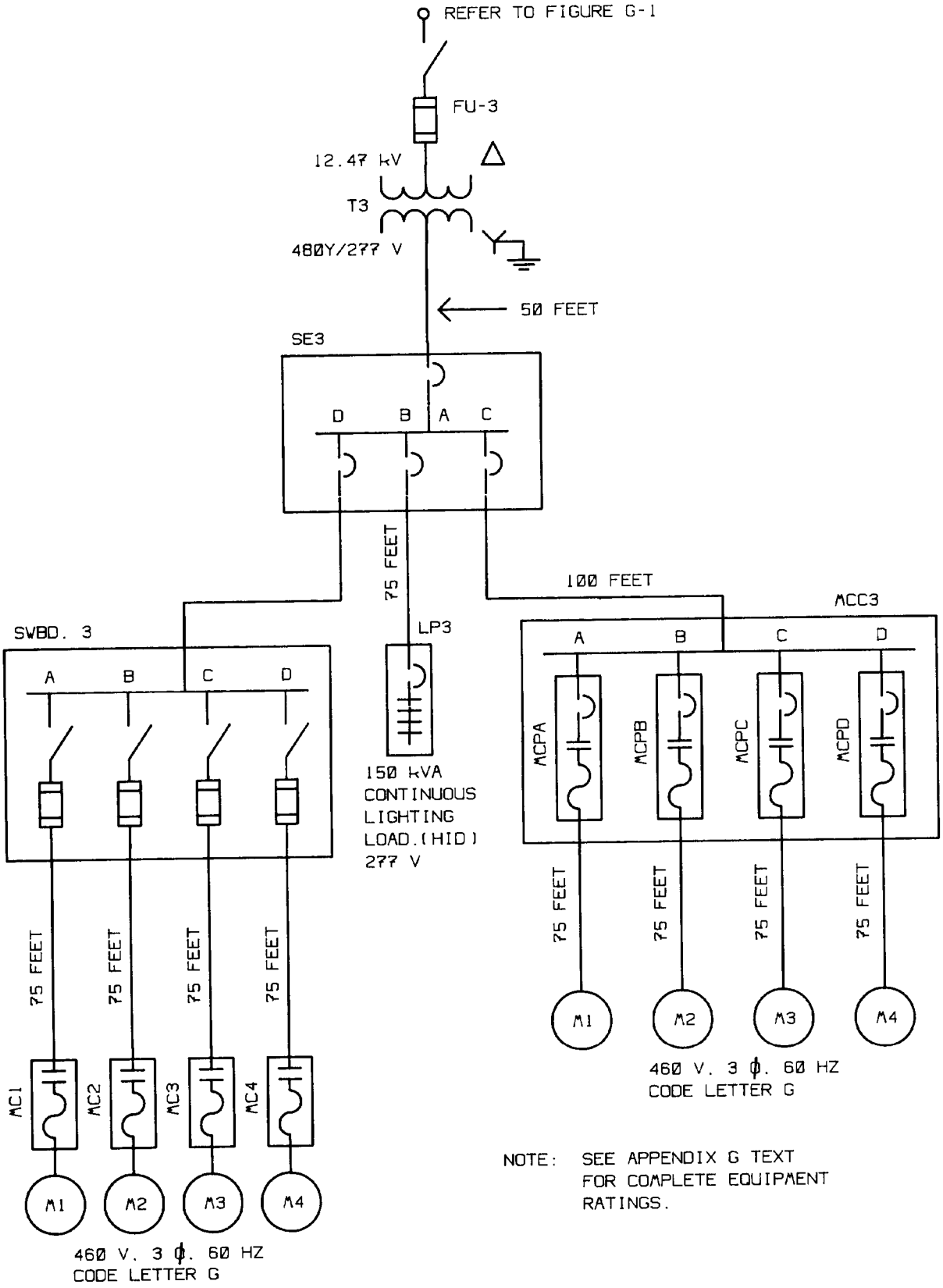

US ARMY CORPS OF ENGINEERS

Figure G-2. 15kV switchgear feeder No. 4.

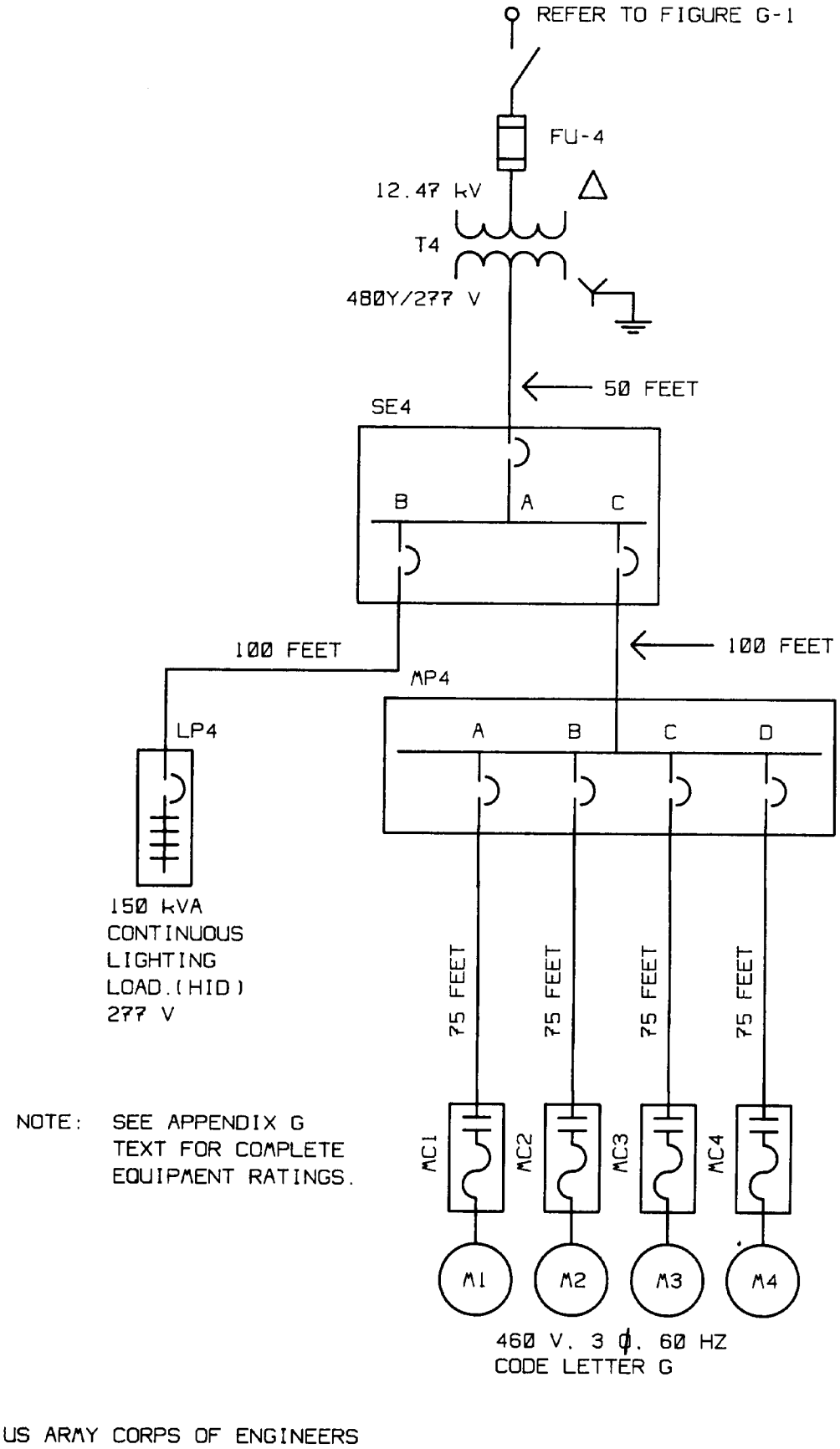

Figure G-3. 15kV switchgear feeder No. 7.

G-2. Equipment ratings

The following list summarizes the various equipment ratings used in figures G-1, G-2, and G-3:

M1— 15-HP Squirrel-cage induction motor (SCIM), 30, 60Hz, 460V, Code letter G.
M2 — 25-HP SCIM, 30, 60Hz, 460V, Code letter G.
M3 — 30-HP Wound-rotor induction motor (WRIM), 30, 60Hz, 460V, Code letter G.
M4 — 50-HP SCIM, 30, 60Hz, 460V, Code letter G.
MS — 500-HP SCIM, X”=20%, X’=50%, X= 125%.
T1 — 20MVA, 8% impedance.
T2 — 20MVA, 8% impedance.
T3 — 750kVA, 5% impedance.
T4 — 500kVA, 4% impedance.
T5 — 500kVA, 4% impedance.
G1 — 1250kVA, 1000kW, 0.8 power factor, 12.47kV. Xd”=20%, Xd’=35%, Xd=100%.
G2 — 1250kVA, 1000kW, 0.8 power factor, 12.47kV. Xd”=20%, Xd’=35%, Xd= 100%.

G-3. Example 1—Low-voltage motor protection using thermal-magnetic circuit breakers

a. Refer to figure G-3 for circuit diagram.

b. Using figure 5-13, the following step-by-step procedure for designing motor circuit protection can be developed:

(1) Step 1. Determine full load amps (FLA), locked rotor amps (LRA), and nameplate amps (NPA) for each motor, M1 through M4.

(a) $M1_{FLA}$= 21A (from NFPA 70)
$M2_{FLA}$= 34A (from NFPA 70)
$M3_{FLA}$= 40A (from NFPA 70)
$M4_{FLA}$= 65A (from NFPA 70)

(b) Locked-rotor kVA per horsepower for a code letter G motor is 6.29 (per NFPA 70). Equations G-1 through G-4 show how to calculate LRA for each motor M1 through M4.

$M1_{LRA}$=(LR kVA)/(1.73)(kV) . (eq G-1)
$M1_{LRA}$=(6.29)(15)/ (eq G-1)
(1.73)(.460= 119A.
$M2_{LRA}$=198A . . . . . (eq G-2)
$M3_{LRA}$ = 237A . . . . . (eq G-3)
$M4_{LRA}$=395A . . . . . (eq G-4)

(c) Nameplate amperes must be determined directly from the motor nameplate. Since this information is not normally available early in the design stages, motor overload protection cannot be determined at this time. Motor overload protection cannot be determined until the motors are actually delivered to the site.

(2) Step 2 Select branch circuit conductors. Conductor ampacity = (1.25)(FLA). The following AWG sizes were selected subject to voltage drop and through-fault withstand.

Circuit MP4-A: (21A)(1 .25) 26.25A. Use #10 AWG.

Circuit MP4-B: (34A)(1.25)=42.5A. Use #6 AWG.

Circuit MP4-C: (40A)(1.25)=50.0A. Use #6 AWG.

Circuit MP4-D: (65A)(1 .25) 81 .25A. Use #3AWG.

(3) Step 3. Select feeder circuit conductors. Conductor ampacity = (1.25) (Largest FLA) + (Remaining FLAs). Of course, circuit conductors should be selected to match bus ratings to obtain optimum system capacity.

SE4-C: (65A)(1.25) + 40A + 34A + 21A = 176.25A. Use 250 MCM minimum since feeder circuit breaker will be set at 250A.

(4) Step 4. Select branch circuit short-circuit protection. Maximum setting is (2.50)(FLA) for squirrel-cage induction motors and (1.50)(FLA) for wound-rotor induction motors per NFPA 70.

Circuit MP4-A: (21A)(2.50) = 52.5A. Use 60A maximum.

Circuit MP4-B: (34A)(2.50) 85.0A. Use 90A maximum.

Circuit MP4-C: (40A)(1.50) = 60.OA. Use 60A maximum.

Circuit MP4-D: (65A)(2.50) = 162.5A. Use 175A maximum.

(5) Step 5. Select feeder circuit short-circuit protection. Maximum setting is (Largest branch circuit device setting) + (Remaining FLAs).

SEA-C, 175A + 40A + 34A + 21A = 270A. Therefore, use 250A maximum unless future capacity is designed into the feeder circuit.

(6) Step 6. Select disconnecting means in accordance with NFPA 70.

(7) Step 7. Using NPA, select overload protection in accordance with NFPA 70. For these motors, overload protection should not exceed (1.25)(NPA).

c. Figures G-4 through G-7 show motor starting curve, motor overload curve, and motor short-cir-

cuit protection curve for each motor. As can be seen from the coordination curves, the NFPA 70 settings that were selected are maximum settings and, in many cases, largely oversized. The trip rating of each circuit breaker can be reduced as long as the respective characteristic curves do not overlap with the respective motor starting curves. If adjustable magnetic (instantaneous) trips are available on the circuit breakers, then overcurrent protection can be "fine-tuned," with this adjustment, by overlaying the time-current characteristic curves.

d. Lighting circuit. FLA for the continuous lighting load of the LP4 lighting panel is calculated as shown in equation G-5. Overcurrent protection for LP4 and SEC4-B is shown below:

$LP4_{FLA}$ = (kVA)/(1.73)(kV) = (150)/(1.73)(.480)=180A (eq G-5)

Circuit LP4: (180AX1.25)=225A.

Circuit 5E4-B: Use 225A circuit breaker and #4/0 AWG feeder circuit conductors.

e. Main transformer and service entrance equipment. For 5E4-A, 175A + 40A + 34A + 21A + (125)(180A)=495A. Therefore, use 450A circuit breaker unless future capacity is designed into the system. Use 2-#4/0 AWG in parallel for service conductors. For transformer T4, (450A)(.480kV)(1.73) = 374kVA. Therefore, use 500kVA.

f. Figure G-8 shows the composite, time-current curves for this system. For simplicity, the starting curve, overload protection curve, and short-circuit protection curve for motor M4 only is shown. As discussed in the TM, these device ratings are NFPA 70 maximums. The time-current curves show that lower values can be used. Remember, the objective is to select optimum time and current settings, not to comply with NFPA 70 maximums. Refer to example 6 for procedures for selecting FU-4.

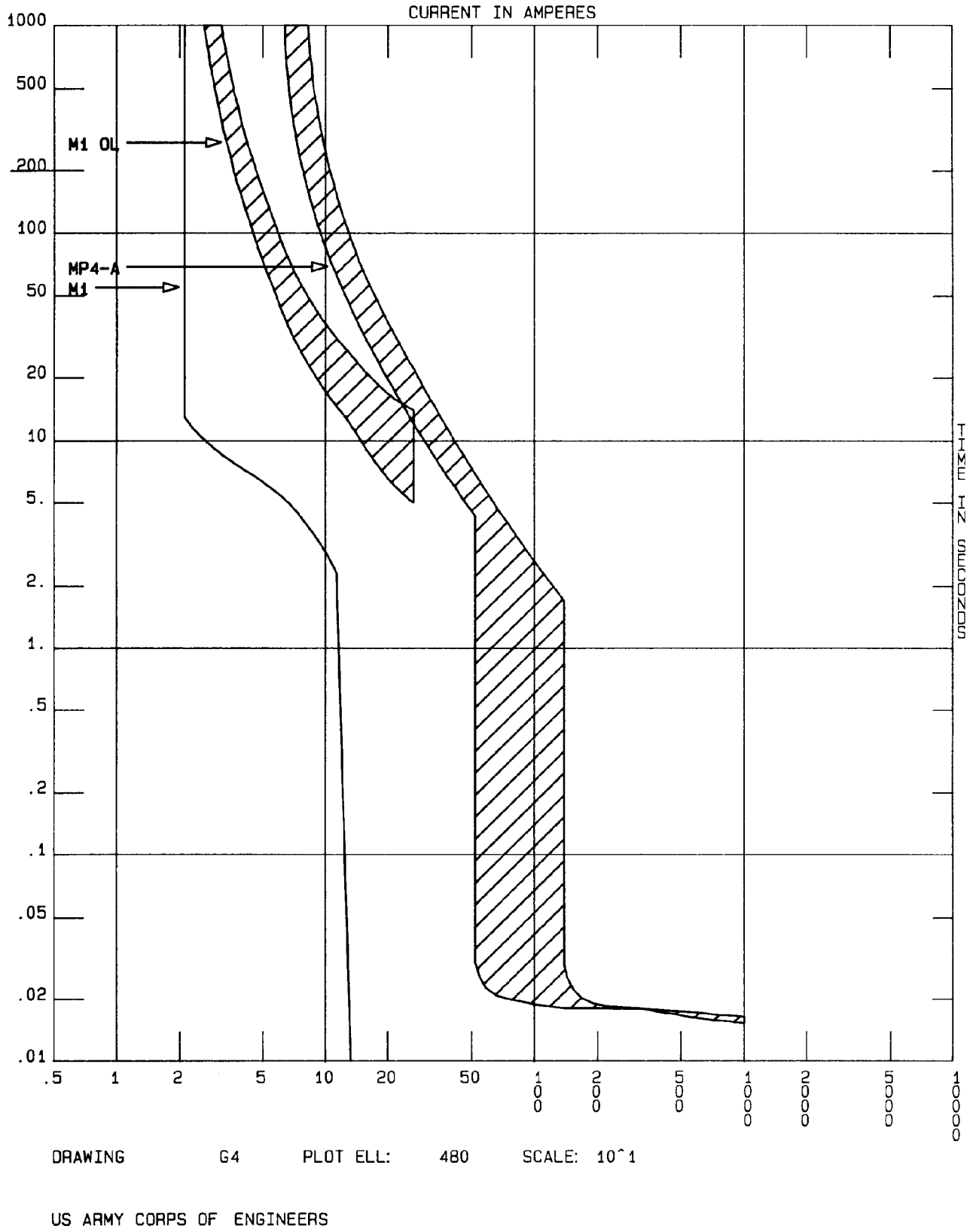

Figure G-4. M1 starting, overload, and CB short-circuit protection curves.

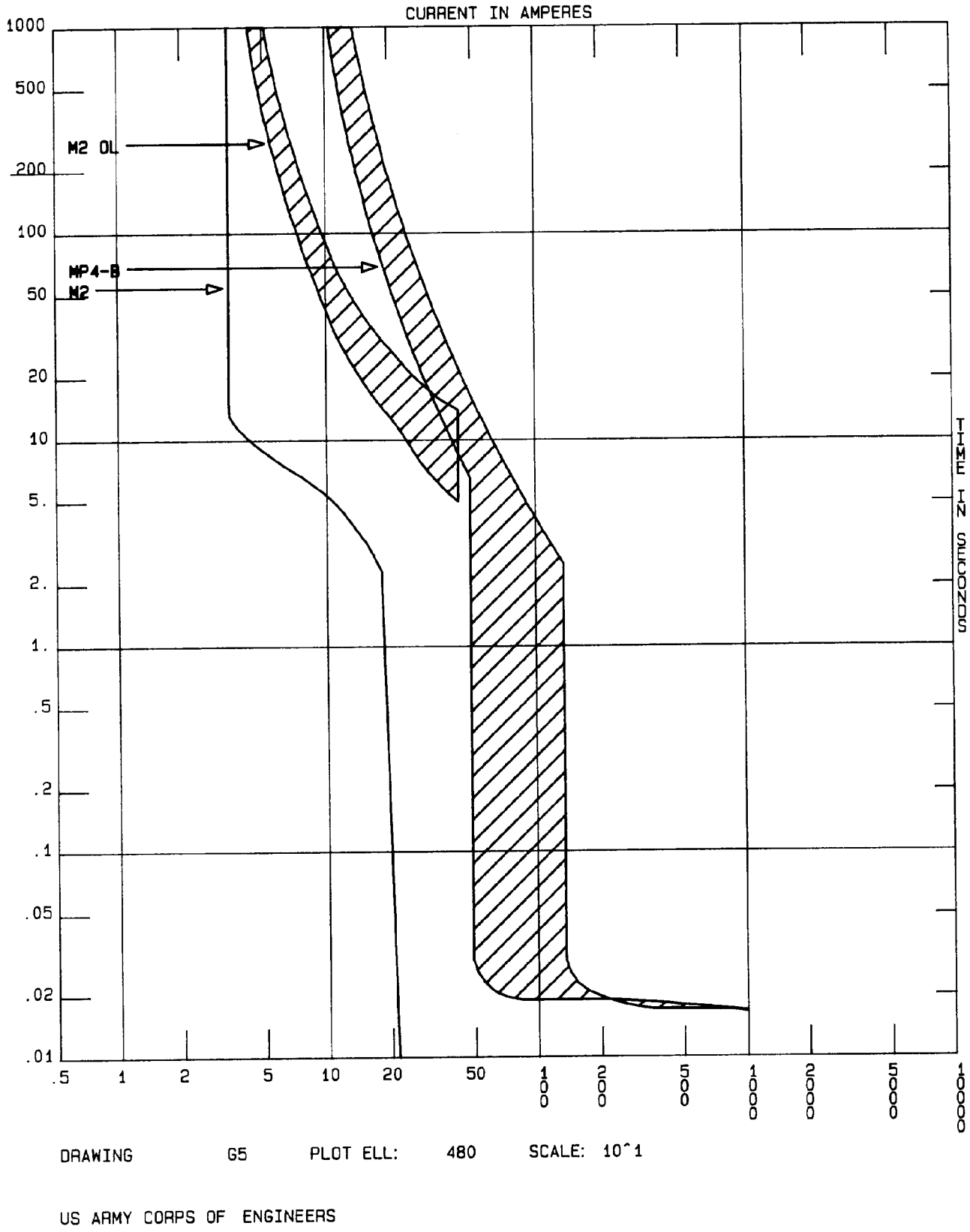

Figure G-5. M2 starting, overload, and CB short-circuit protection curves.

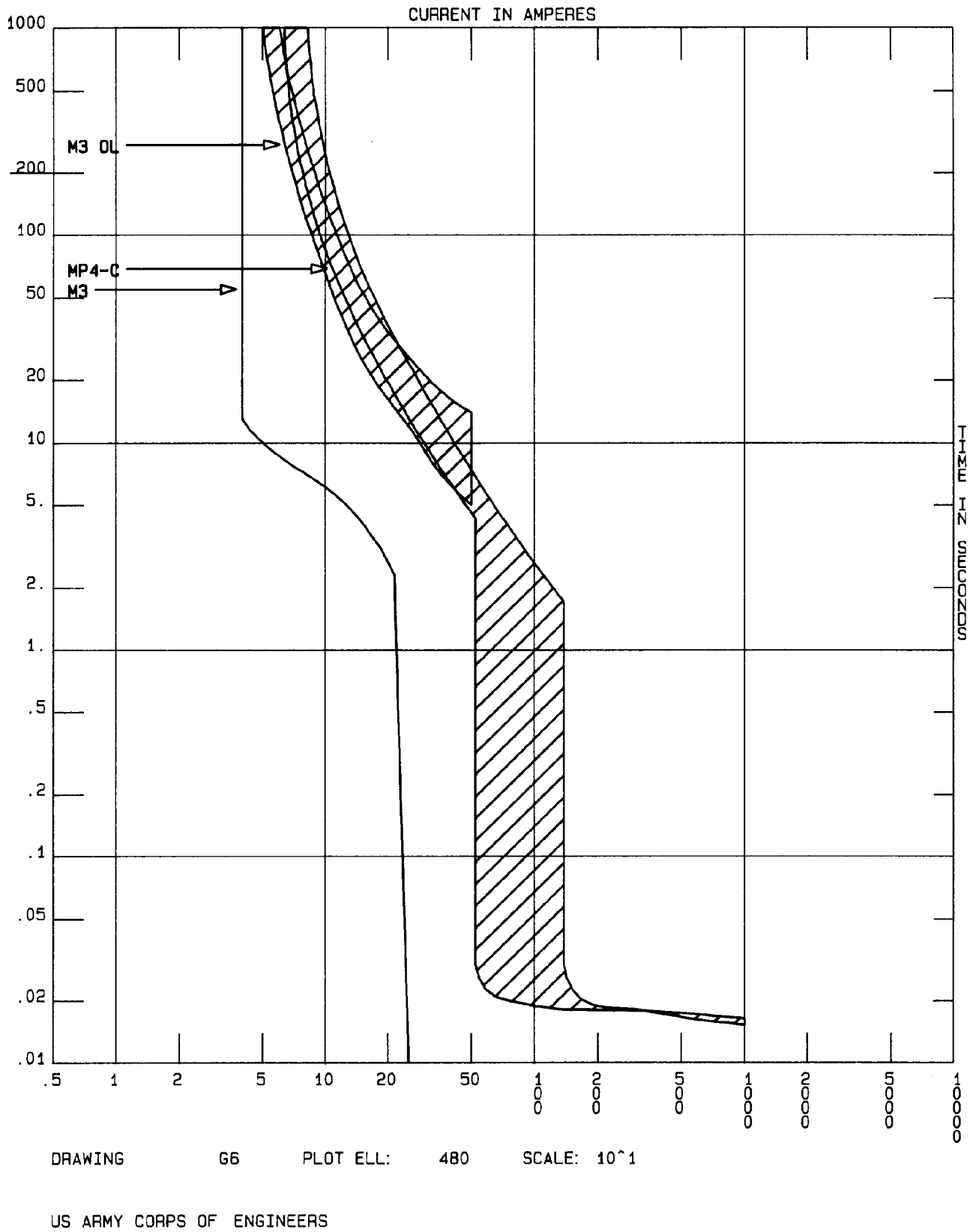

Figure G–6. M3 starting, overload, and CB short-circuit protection curves.

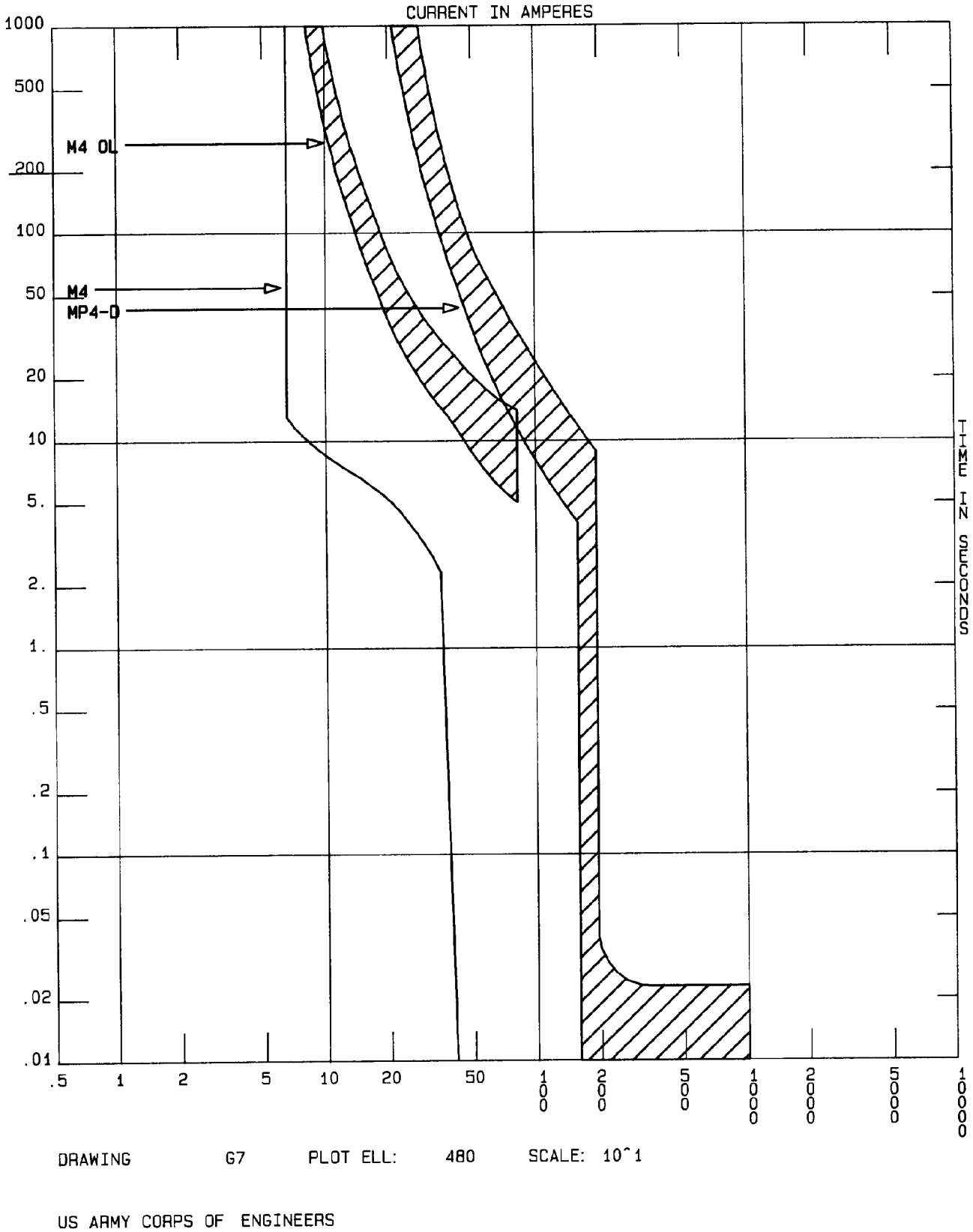

Figure G-7. M4 starting, overload, and CB short-circuit protection curves.

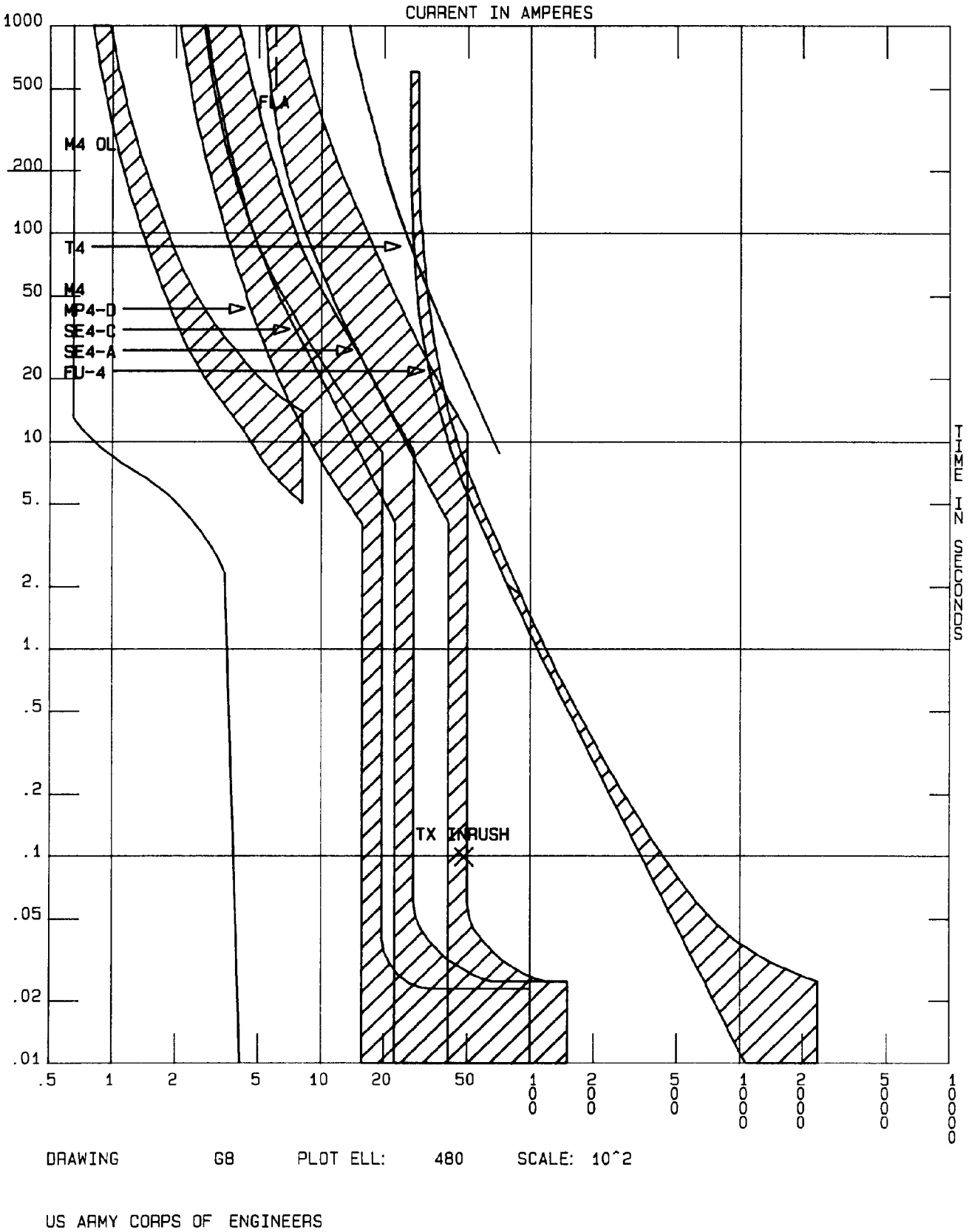

G–8. Composite time-current curves for Example 1.

G-4. Example 2—Low-voltage motor protection using motor circuit protectors.

a. Refer to figure G-2 for circuit diagram.

b. Using figure 5-13, the following step-by-step procedure for selecting motor circuit protection can be developed:

(1) Step 1. Determine full-load amps (FLA), locked rotor amps, and nameplate amps (NPA) for each motor, M1 through M4.

(a) $M1_{FLA}$ = 21A (from NFPA 70).
$M2_{FLA}$ =34A (from NFPA 70).
$M3_{FLA}$ = 40A (from NFPA 70).
$M4_{FLA}$ = 65A (from NFPA 70).

(b) Locked-rotor kVA per horsepower for a code letter G motor is 6.29 (per NFPA 70). Equations G-6 through G-9 show how to calculate LRA for each motor M1 through M4.

$M1_{LRA}$ = (LRkVA)/(1.73)(kv) (eq G-6)
$M1_{LRA}$ = (6.29)/(15/ (1.73)(.460)=119A (eq G-6)
$M2_{LRA}$ = 198A (eq G-7)
$M3_{LRA}$ = 237A (eq G-8)
$M4_{LRA}$ = 395A (eq G-9)

(c) Nameplate amperes must be determined directly from the motor nameplate. Since this information is not normally available early in the design stages, motor overload protection cannot be determined at this time. Motor overload protection cannot be determined until the motors are actually delivered to the site.

(2) Step 2. Select branch circuit conductors. Conductor ampacity = (1.25)(FLA). The following AWG sizes were selected subject to voltage drop and through-fault withstand:

Circuit MCC3-A: (21A)(1 .25) = 26.25A. Use #10 AWG.

Circuit MCC3-B: (34A)(1.25)=42.5A. Use #6 AWG.

Circuit MCC3-C: (40A)(l.25)=50.0A. Use #6 AWG.

Circuit MCC3-D: (65AX1 .25) = 81.25A. Use #3 AWG.

(3) Step 3. Select feeder circuit conductors. Conductor ampacity=(1.25)(Largest FLA) + (Remaining FLAs). For 5E4-C, (65A)(1.25%) + 40A + 34A + 21A = 176.25A. Therefore, use 25 MCM minimum since feeder circuit breaker will be set at 250A.

(4) Steps 4, 6, and 7. Motor circuit protectors (MCP) must be large enough (frame rating) to qualify as a motor disconnecting means. Therefore, frame rating requirements for each motor will be as follows:

M1: (1.15X21A)=24.15A. Use l00A frame.
M2: (1.15)(34A)=39.01A. Use l00A frame.
M3: (1.15)(40A)=46.0A. Use 100A frame.
M4: (1.15)(65A)=74.75A. Use l00A frame.

(5) Each pole of the MCP contains a current sensing element to trip the circuit breaker instantaneously when this current setting is exceeded. It is recommended that the MCP be set not less than two times the motor locked rotor amperes (LRA). NFPA 70 limits the maximum setting of the MCP to not greater than 13 times the motor full-load amperes (FLA). Therefore, MCP settings for each motor will be as follows:

Circuit MCC3-A: (119A)(2.0)=238A. Std. setting 240A.

Circuit MCC3-B: (198A)(2.0) = 396A. Std. setting 390A.

Circuit MCC3-C: (237A)(2.0)=474A. Std. setting 420A.

Circuit MCC3-D: (395A)(2.0)=790A. Std. setting 804A.

(6) The MCP must include motor overload protection and short-circuit protection in the same enclosure. Overload protection for these motors should not exceed 125 percent of motor nameplate amperes (NPA).

(7) Step 5. Select feeder short-circuit protection. Maximum setting should not exceed that calculated in step 5, example 1. Use 250A maximum unless future capacity is designed into the system.

c. Figures G-9 through G-12 show motor starting curve, motor overload curve, and MCP short-circuit protection curve for each motor.

d. Main transformer and service entrance equipment. Main circuit breaker, 5E3-A, must supply the four motors at SWBD3, the four motors at MCC3, and the 150kVA lighting load. The largest fuse in SWBD3 is 200A (SWBD3-D). Refer to example 3. For 5E3-A, 200A+65A+2(40A)+2(34 A) + 2(21A) + (l.25)(180A) = 680A. Therefore, use 600A circuit breaker unless future capacity is designed into the system. For transformer T3, (600A)(.480kV)(1 .73) = 518.4kVA. Therefore, use 750 kVA.

e. Figure G-13 shows the composite, time-current curves for this system using MCPs. For simplicity, only motor M4 is shown. As discussed in the TM, these device ratings are NFPA 70 maximums. The time-current curves show that lower values can be used. Remember, the objective is to select optimum time and current settings, not to comply with NFPA 70 maximums. Refer to Example 6 for procedures for selecting FU-3.

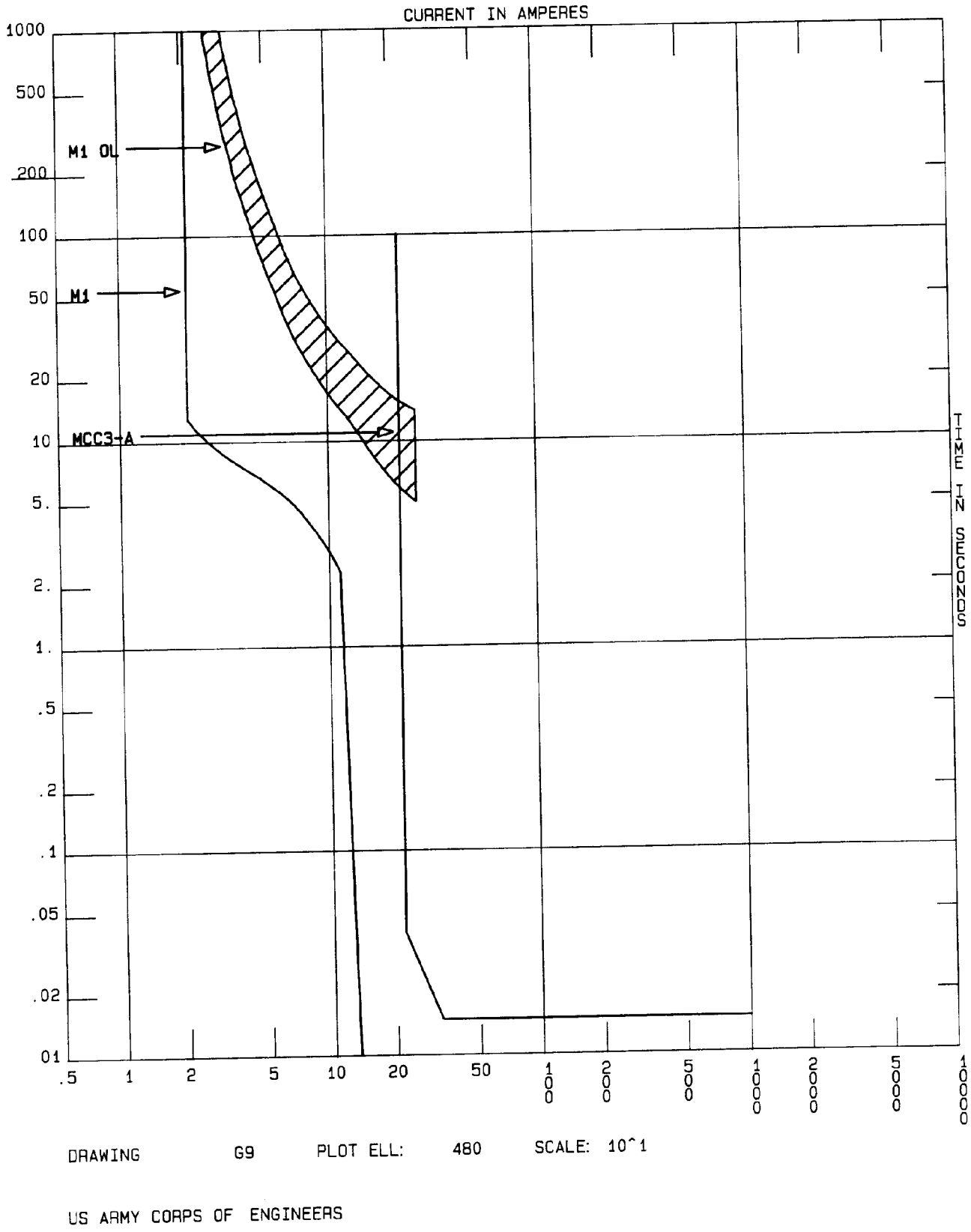

Figure G-9. M1 starting, overload, and MCP short-circuit protection curves.

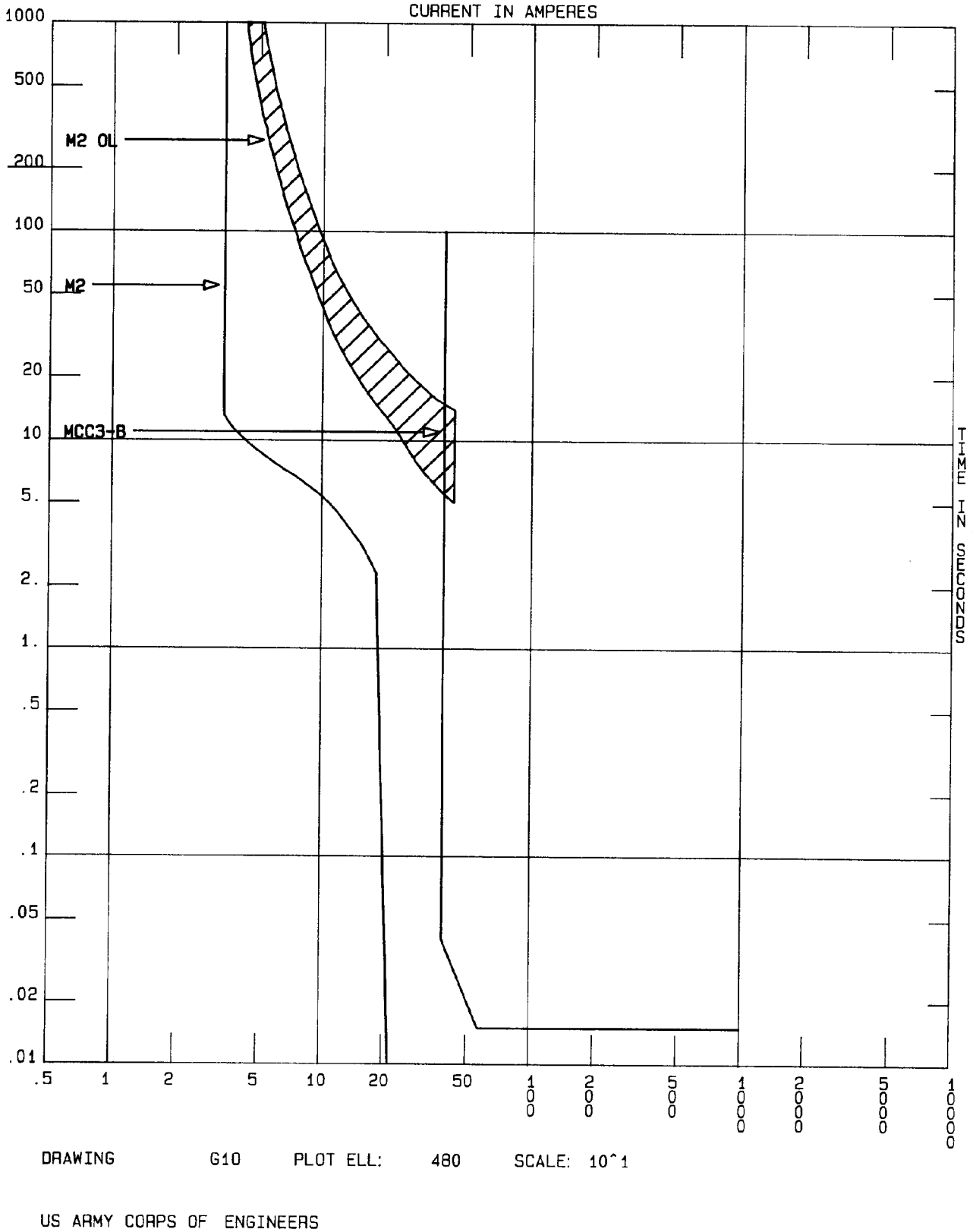

Figure G–10. M2 starting, overload, and MCP short-circuit protection curves.

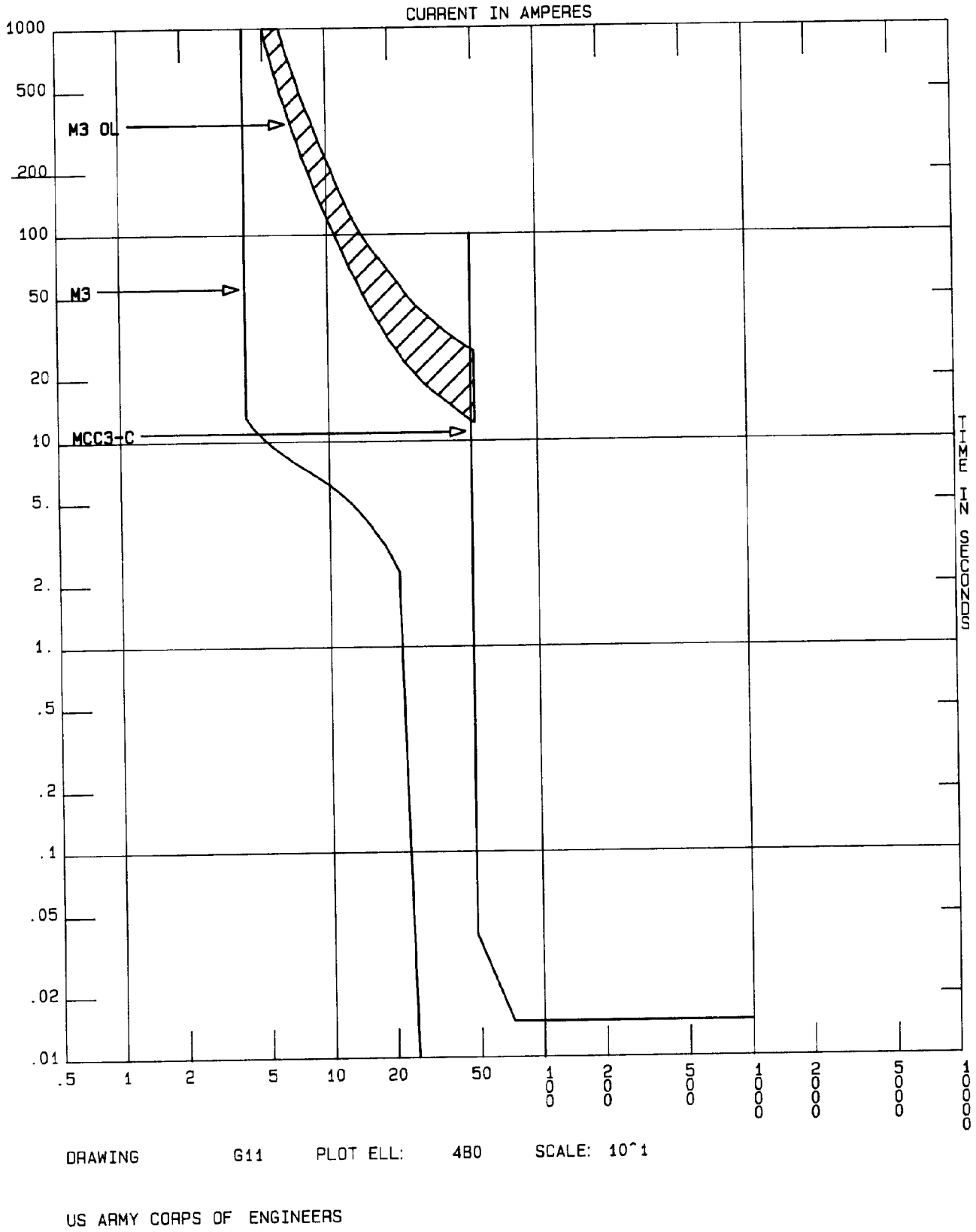

Figure G–11. M3 starting, overload, and MCP short-circuit protection curves.

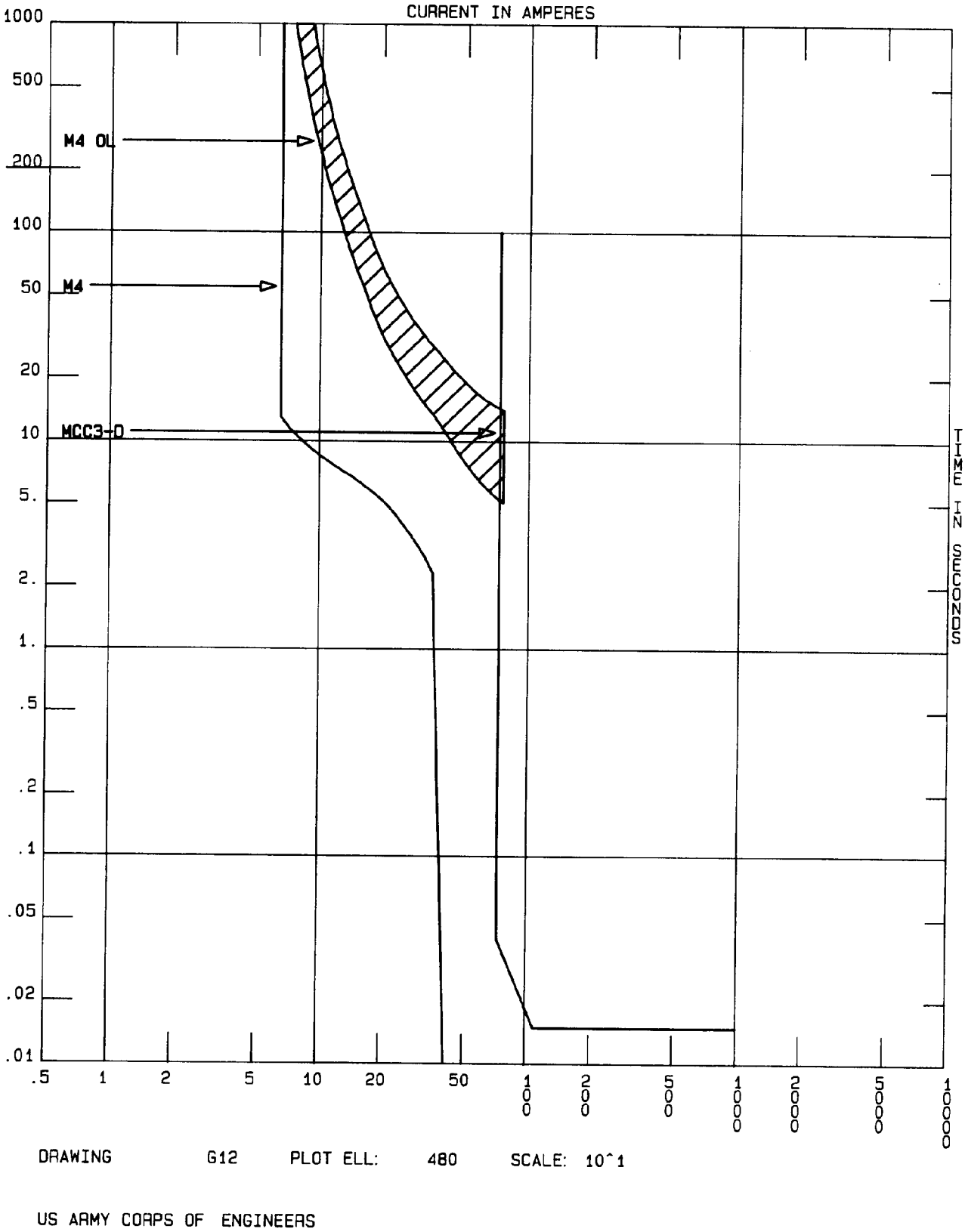

Figure G–12. M4 starting, overload, and MCP short-circuit protection curves.

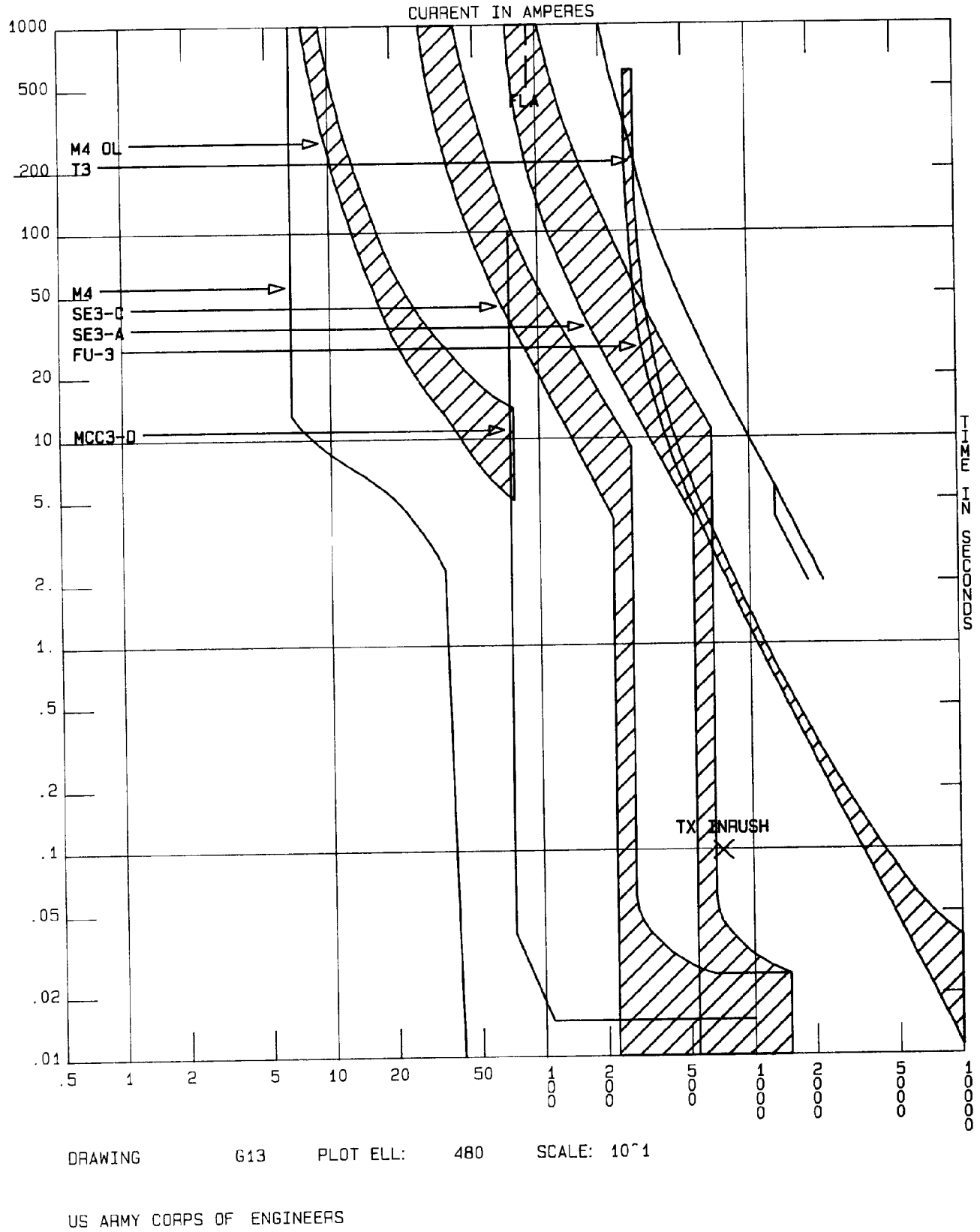

Figure G–13. Composite time-current curves for Example 2.

G-5. Example 3—Low-voltage motor protection using fused switches

a. Refer to figure G-2 for the circuit diagram.

b. Using figure 5-13, the following step-by-step procedure for selecting motor circuit protection can be developed:

(1) Step 1. Determine full load amps (FLA), locked rotor amps (LRA), and name plate amps (NPA) for each motor, M1 through M4.

(a) $M1_{FLA}$ = 21A (from NFPA 70).
$M2_{FLA}$ =34A (from NFPA 70).
$M3_{FLA}$ = 40A (from NFPA 70).
$M4_{FLA}$ = 65A (from NFPA 70).

(b) Locked-rotor kVA per horsepower for a code letter G motor is 6.29 (per NFPA 70). Equations G-10 through G-13 show how to calculate LRA for each motor M1 through M4.

$M1_{LRA}$ = (LRkVA)/(1.73)(kv) (eq G-10)
$M1_{LRA}$ = (6.29)/(15/ (1.73)(.460)=119A (eq G-10)
$M2_{LRA}$ = 198A (eq G-11)
$M3_{LRA}$ = 237A (eq G-12)
$M4_{LRA}$ = 395A (eq G-13)

(c) Nameplate amperes must be determined directly from the motor nameplate. Since this information is not normally available early in the design stages, motor overload protection cannot be determined at this time. Motor overload protection cannot be determined until the motors are actually delivered to the site.

(2) Step 2. Select branch circuit conductors. Conductor ampacity = (1 .25)(FLA). The following AWG values were selected subject to voltage drop and through-fault withstand:

Circuit SWBD3-A: (21A)(1 .25) = 26.25A Use #10 AWG.

Circuit SWBD3-B: (34A)(1 .25) = 42.5A Use #6 AWG.

Circuit SWBD3-C: (40A)(1.25) = 50.0A Use #6 AWG.

Circuit SWBD3-D: (65A)(1 .25) = 81.25A Use #3 AWG.

(3) Step 3. Select feeder circuit conductors. Conductor ampacity = (1.25) (Largest FLA) + (Remaining FLAs). For SE3-D, (65A)(1.25) + 40A + 34A + 21A = 176.25A. Therefore, use 250 MCM minimum since feeder circuit breaker will be set at 250A.

(4) Step 4. Select branch circuit short-circuit protection. Maximum setting is (3.00)(FLA) for non-time delay fuses and (1.75)(FLA) for time-delay fuse per NFPA 70. Since NFPA 70 recognizes both time delay and non-time delay fuses for low--voltage motor circuit protection, both types are included in this example. However, it is recommended that only time-delay fuses be used for motor, transformer, and other inductive loads. The disadvantages of non-time delay fuses were discussed in this TM and will be readily obvious from this example.

SWBD 3-A: Use Class RK-5, time delay fuses.

(21A)(1.75)=36.75A. Use 40A fuses and 60A switch.

SWBD 3-B: Use Class RK-5, time delay fuses.

(34A)(1.75)=59.5A. Use 60A fuses and 60A switch.

SWBD 3-C: Use Class RK-5, non-time delay fuses.

(40A)(3.00) = 120A. Use 125A fuses and 200A switch.

SWBD 3-D: Use Class RK-5, non-time delay fuses.

(65A)(3.00)= 195A. Use 200A fuses and 200A switch.

(5) Step 5. Select feeder circuit short-circuit protection. Maximum setting is (Largest branch circuit device setting) + (Remaining FLAs). For 5E3-D, 200A + 40A + 34A + 21A = 295A. Therefore, use 250A unless future capacity is designed into the system.

(6) Step 6. Select disconnecting means in accordance with NFPA 70.

(7) *Step* 7. Using NPA, select overload protection in accordance with NFPA 70. For these motors, overload protection should not exceed (1.25)(NPA).

c. Due to the fact that the non-time delay fuses must be oversized by 300 percent, larger switches are required to accommodate the oversized fuses. For this and other reasons discussed in this TM, time delay fuses should be specified for motor, transformer, and other inductive loads.

d. Figures G-14 through G-17 show the motor starting curve, motor overload curve, and fuse short-circuit protection curves for each motor:

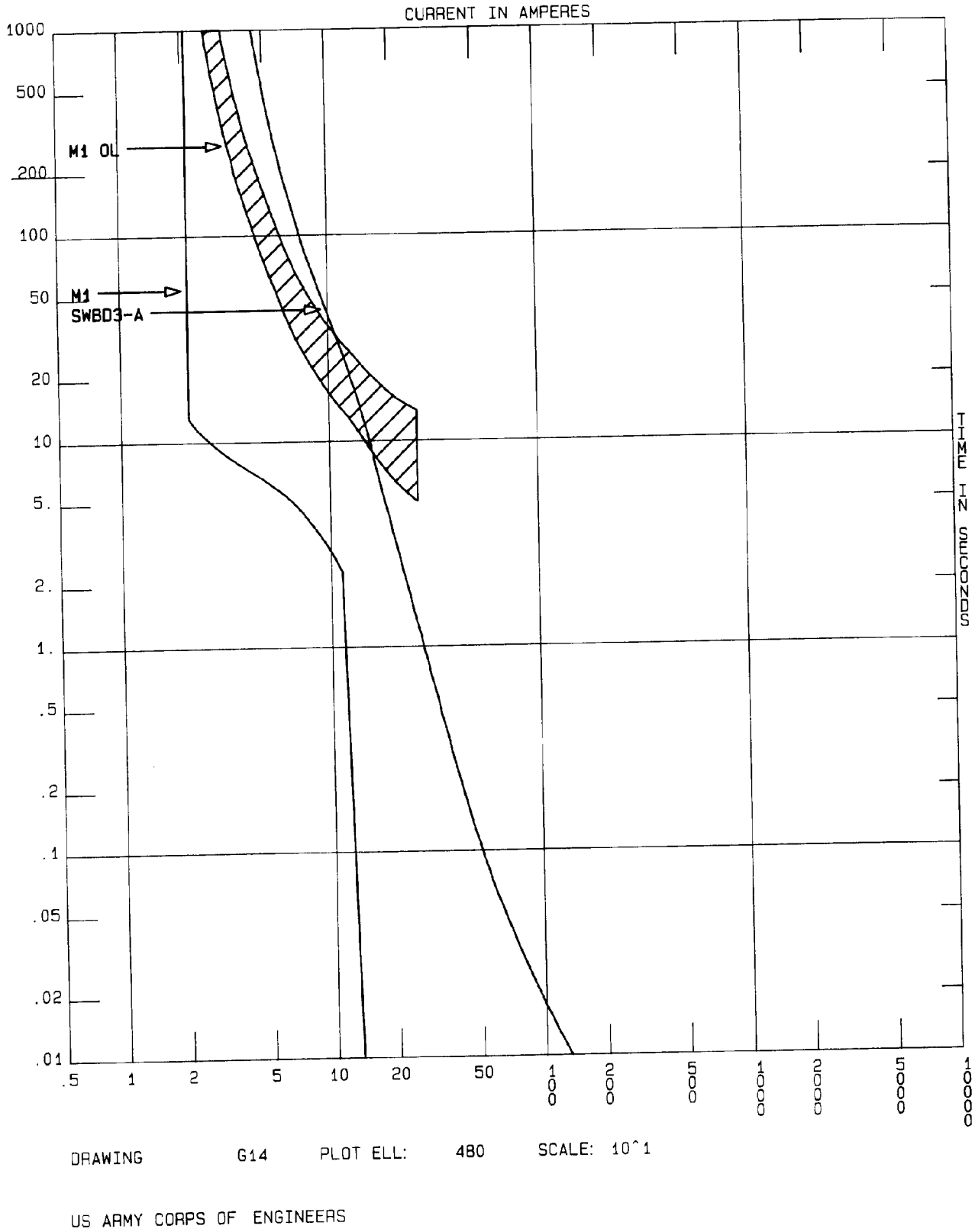

Figure G-14. M1 starting, overload, and fuse short-circuit protection curves.

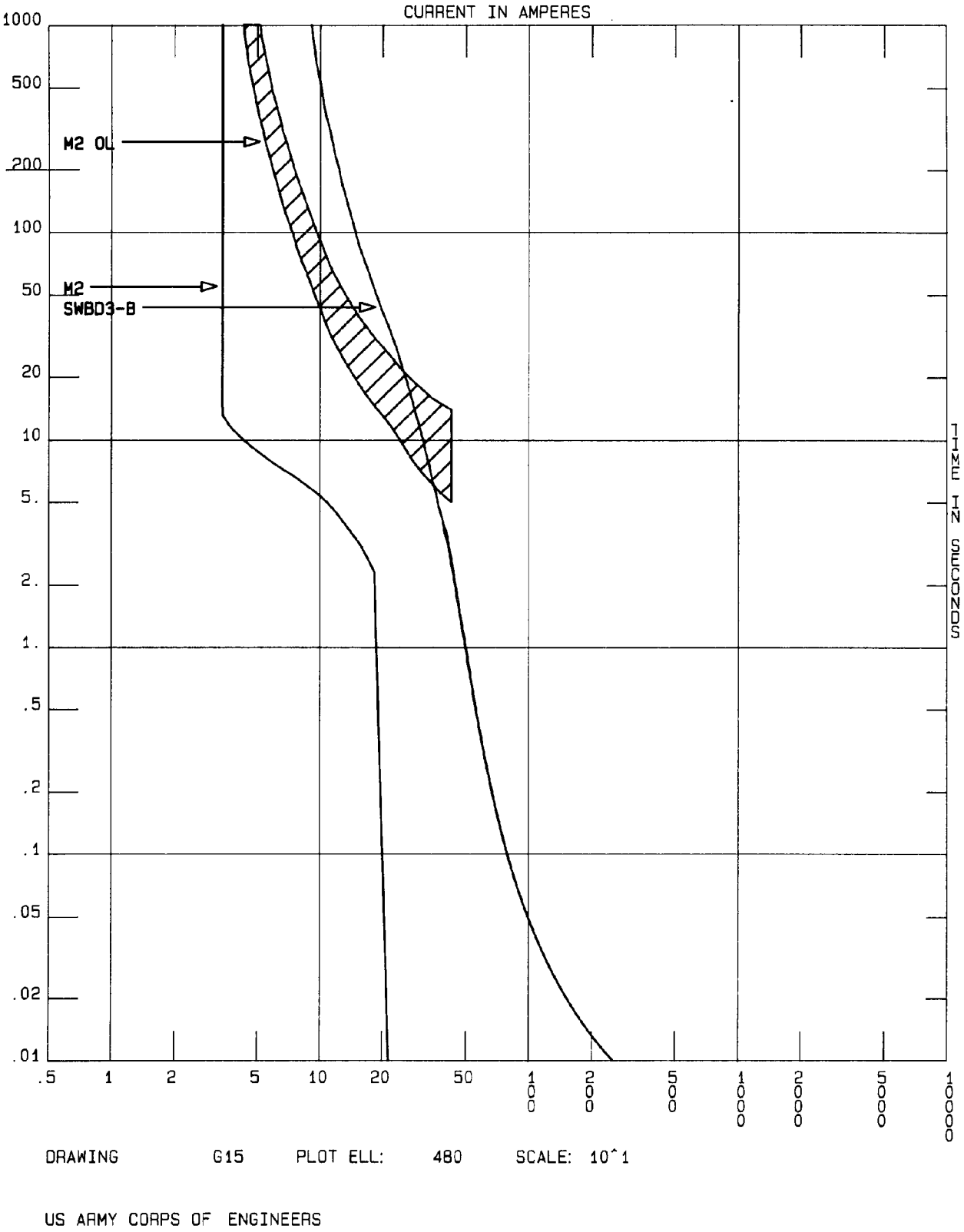

Figure G-15. M2 starting, overload, and fuse short-circuit protection curves.

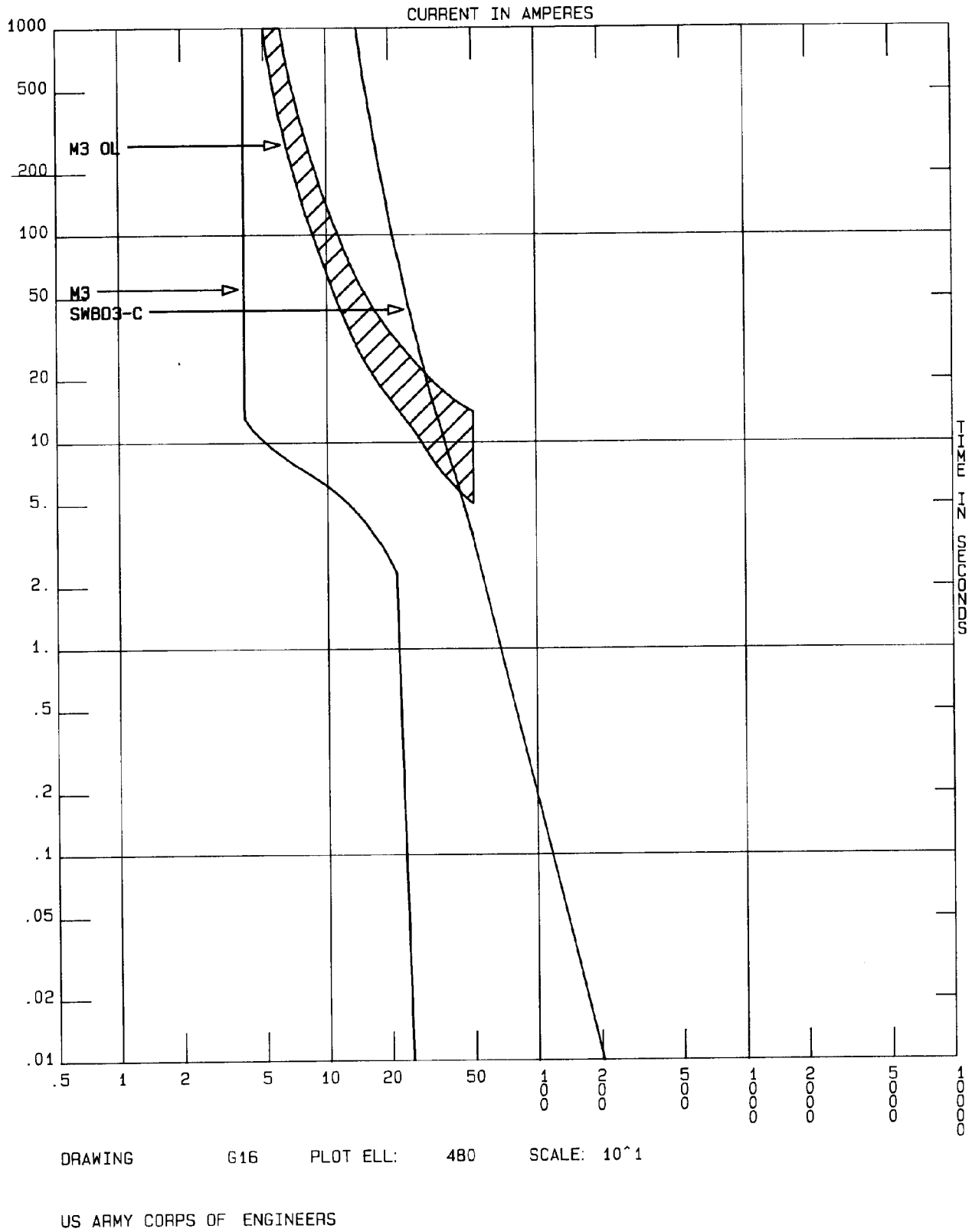

Figure G-16. M3 Starting, overload, and fuse short-circuit protection curves.

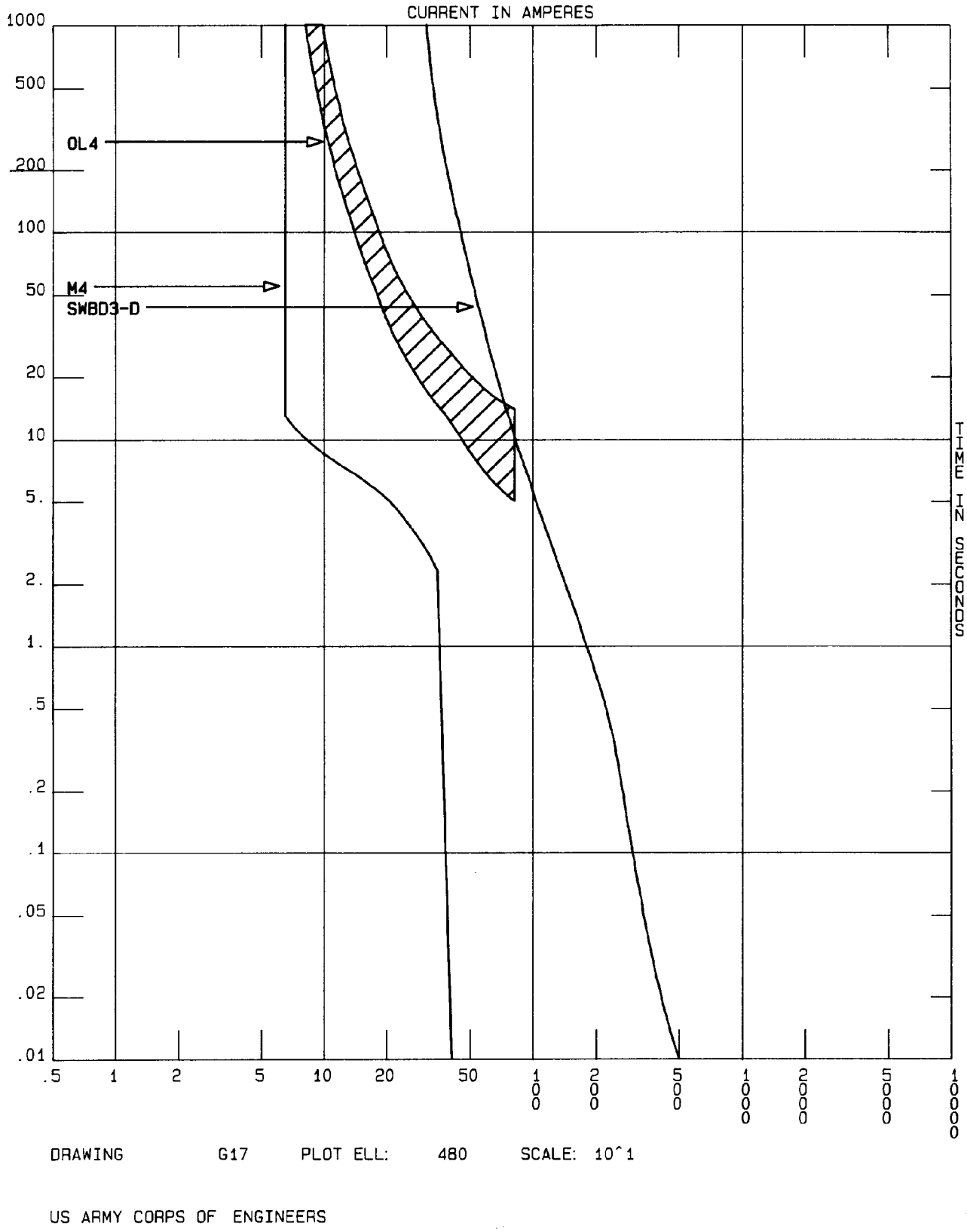

Figure G–17. M4 starting, overload, and fuse short-circuit protection curves.

G-6. Example 4—Low-voltage ground-fault protection

a. Refer to figure G-3 for the circuit diagram.

b. Since the main circuit breaker, SE4-A, is rated at only 450A, separate ground-fault protection is not required by NFPA 70. Recall that NFPA 70 requires separate ground-fault protection on 480Y/277V services rated 1000A or more. However, this example illustrates the application of ground-fault protection at services in general. Figure G18 shows time-current curves for ground-fault protection at the main only. The ground-fault protection is shown with three different time-current values: GFP1, GFP2, and GFP3. GFP1 is the maximum ground-fault setting permitted by NFPA 70 (i.e., 1200A pick-up and one second time delay for ground-fault currents greater than 3000A). However, the GFP1 setting is not coordinated with the motor feeder (SE4-C) or the motor branch circuit (MP4-D) standard protection de- vices. A 1500A ground-fault, for example, at motor M4 terminals will trip the main circuit breaker on ground-fault, shutting down the entire system. If a ground-fault occurs in the service equipment, extensive damage may occur before the GFP1 trips the main. In order to improve coordination, the ground-fault protection can be reduced to either GFP2 or GFP3. Figure G-19 shows time-current curves for coordinated ground-fault protection at the main (SE4-A), feeder (SE4-C), and branch (MP4-D).

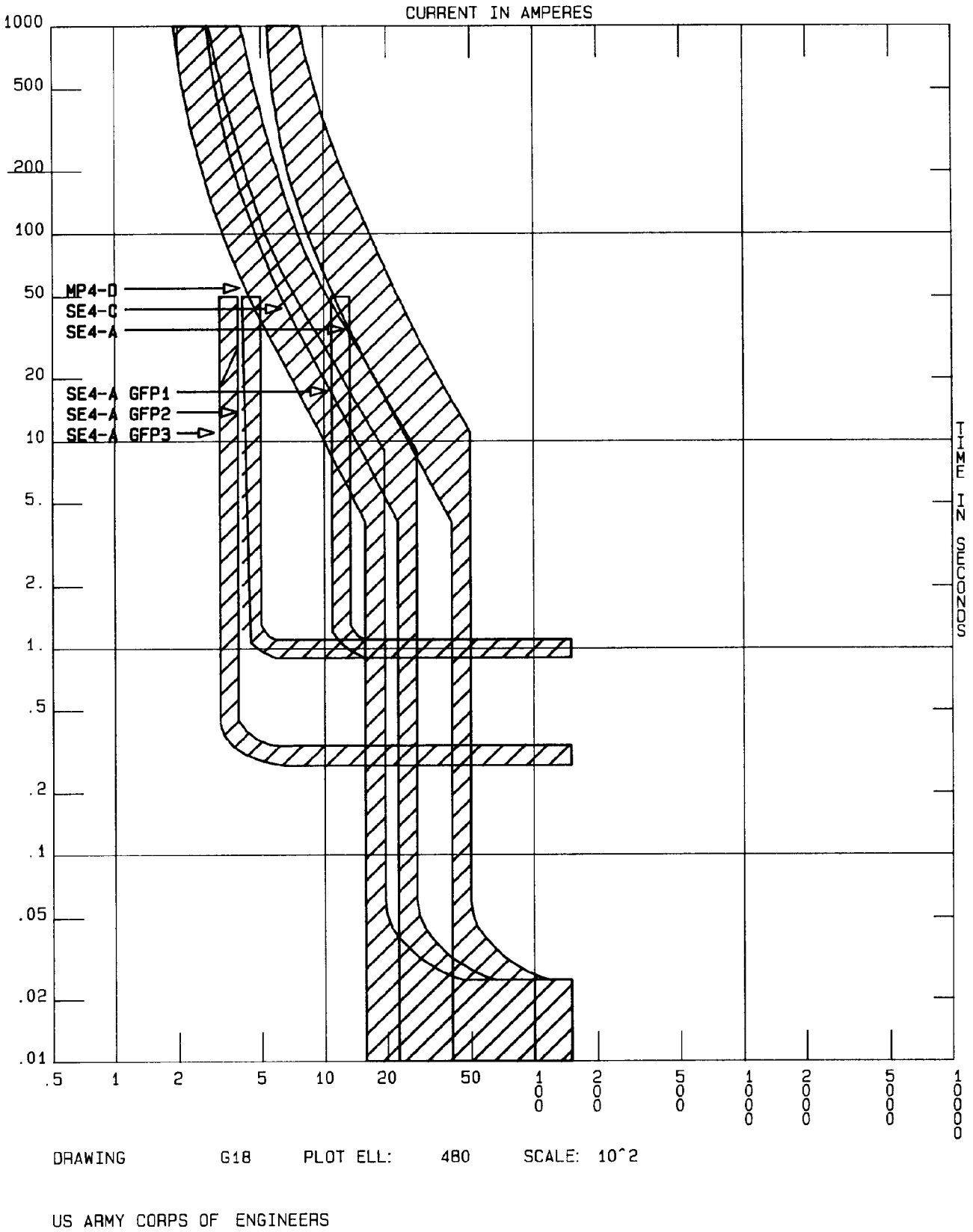

Figure G–18. Ground-fault protection at main only (nonselective, single-zone).

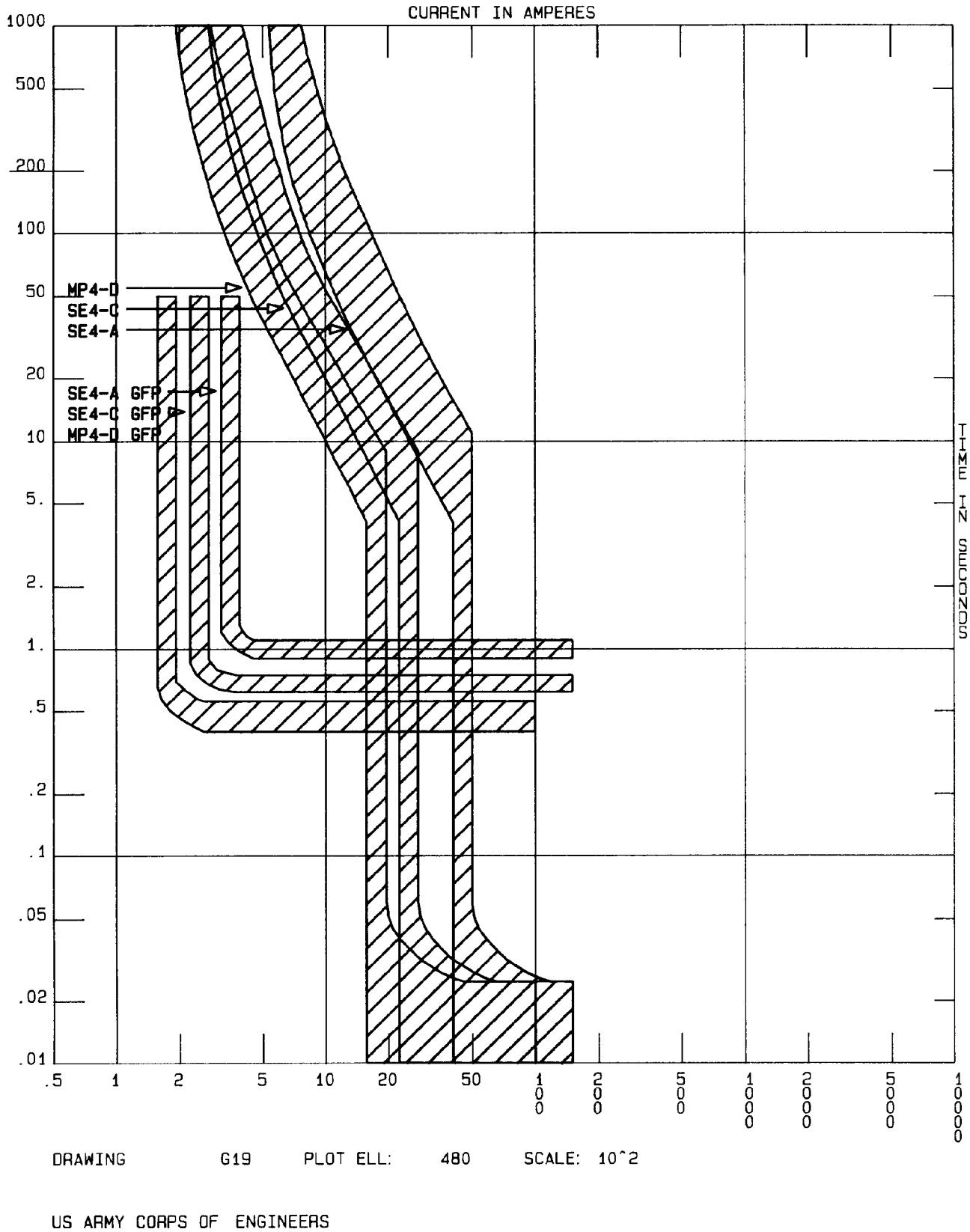

Figure G–19. Ground-fault protection at main, feeder, and branch (selective, time-coordinated).

G-7. Example 5—Impedance diagram and short-circuit calculation

a. Refer to figure G-20 for the overall system impedance diagram of figure G-1.

b. Only items with significant impedance values are considered in this example. They are the utility, transformer, generators, and conductors. The impedances of switches, circuit breakers, busses, and similar items were excluded. Xd' represents machine subtransient reactance (first few cycles following short circuit), Xd" represents machine transient reactance (up to about 30 cycles after short circuit), and Xd represents the machine synchronous reactance (steady state short-circuit current).

c. Standard per unit equations.

X utility=Xu=Base kVA/Utility kVA. (eq G-14)

X new=(X old) (Base kVA new) (kV old)^2/(Base kVA old) (kV new)$^{2.}$ (eq G-15)

X pu=(X ohms)Base kVA)^2/1000 (Base kV)$^{2.}$ (eq G-16)

d. Impedance Calculations.

(1) Assume Base kVA=2000kVA.

(2) Assume Base kV=12.47kV;4.16kV;480V.

$X_{u1}=X_{u2}$=2000kVA/500,000kVA=.004 pu. (eq G-17)

$X''_{G1}=X''_{G2}$=(.2)(2000)/1250=.32p u. (eq G-18)

$X'_{G1}=X'_{G2}$=(.35)(2000)/1250=.56p u. (eq G-19)

$X_{G1}=X_{G2}$=(1)(2000)/12.50=1.6 p u. (eq G-20)

$X_{T1}=X_{T2}$=(.08)(2000)/20,000=.008p u. (eq G-21)

X_{T3}=(.05)(2000)/50=.133 pu . (eq G-22)

X_{T4}=(.04)(2000)/50=.16 pu . . (eq G-23)

X_{T5}=(.04)(2000)/50=.16 pu . . (eq G-24)

X'_{m5}=(.2)(2000)/(4160)^2(500)(4000)^2=.866p u. (eq G-25)

X'_{m5}=(.5)(2000)/(4160)^2(500)(4000)^2=2.165p u. (eq G-26)

X'_{m5}=(1.25)(2000)/(4160)^2(500)(4000)^2=5.41p u. (eq G-27)

X'_{m4}=(.25)(2000)/(480)^2(50)(460)^2=10.89p u. (eq G-28)

X'_{m3}=(.25)(2000)/(480)^2(30)(460)^2=18.15p u. (eq G-29)

X'_{m2}=(.25)(2000)/(480)^2(25)(460)^2=21.78p u. (eq G-30)

X'_{m1}=(.25)(2000)/(480)^2(15)(460)^2=36.29p u. (eq G-31)

$X'_{L4}=X_{L7}$=(.5)(.2)(2000)/(12.47)^2(1000)=.0012p u. (eq G-32)

$X'_{L5}=X_{L6}$=(.4)(.2)(2000)/(12.47)^2(1000)=.00103p u. (eq G-33)

X_{SE3-A}=0 . . . . . (eq G-34)

X_{SE4-A}=0 . . . . . (eq G-35)

X_{SE3-B}=(.1)(.0355)(2000)/(.480)^2(1000)=.031 pu. (eq G-36)

X_{SE3-Dd}=(.15)(.0355)(2000)/(.480)^2(1000)=.046 pu. (eq G-37)

X_{LA}=(.075)(1.2)(2000)/(.480)^2(1000)=.78 pu. (eq G-38)

X_{LB}=(.075)(.52)(2000)/(.480)^2(1000)=.34 pu. (eq G-39)

X_{Lc}=.34 pu (eq G-40)

X_{LD}=(.075)(.28)(2000)/(.480)^2(1000)=.18 pu. (eq G-41)

$X_{SE4-C}=X_{SE3-B}$=.031 pu (eq G-42)

e. Figure G-21 shows the reduced impedance diagram. This diagram can be used to calculate short-circuit current at any point within the system. I"sc represents the current during the first few cycles following a short-circuit. I'sc represents the current up to about 30 cycles, and Isc represents the steady-state short-circuit current.

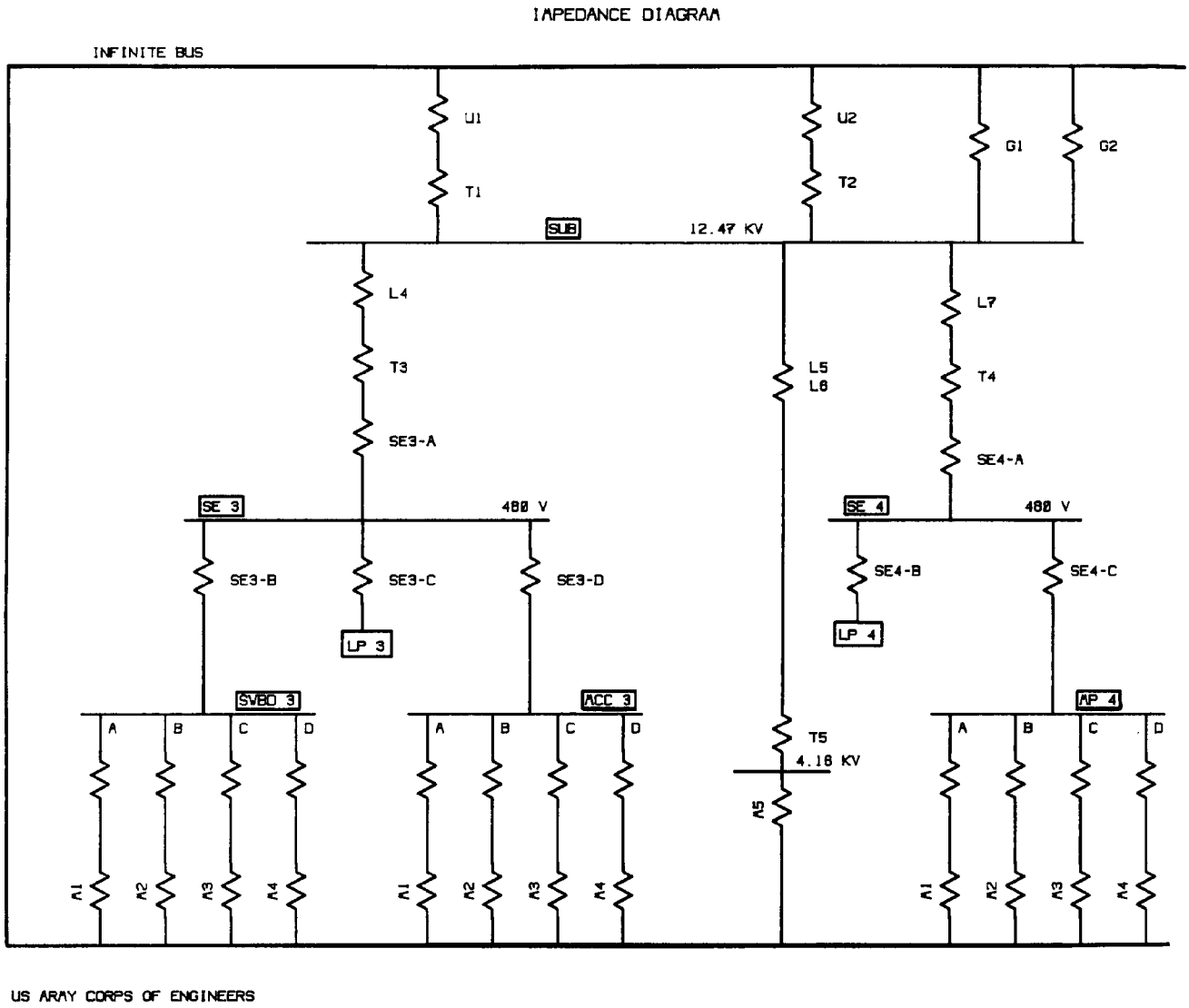

US ARMY CORPS OF ENGINEERS

Figure G–20. Impedance diagram.

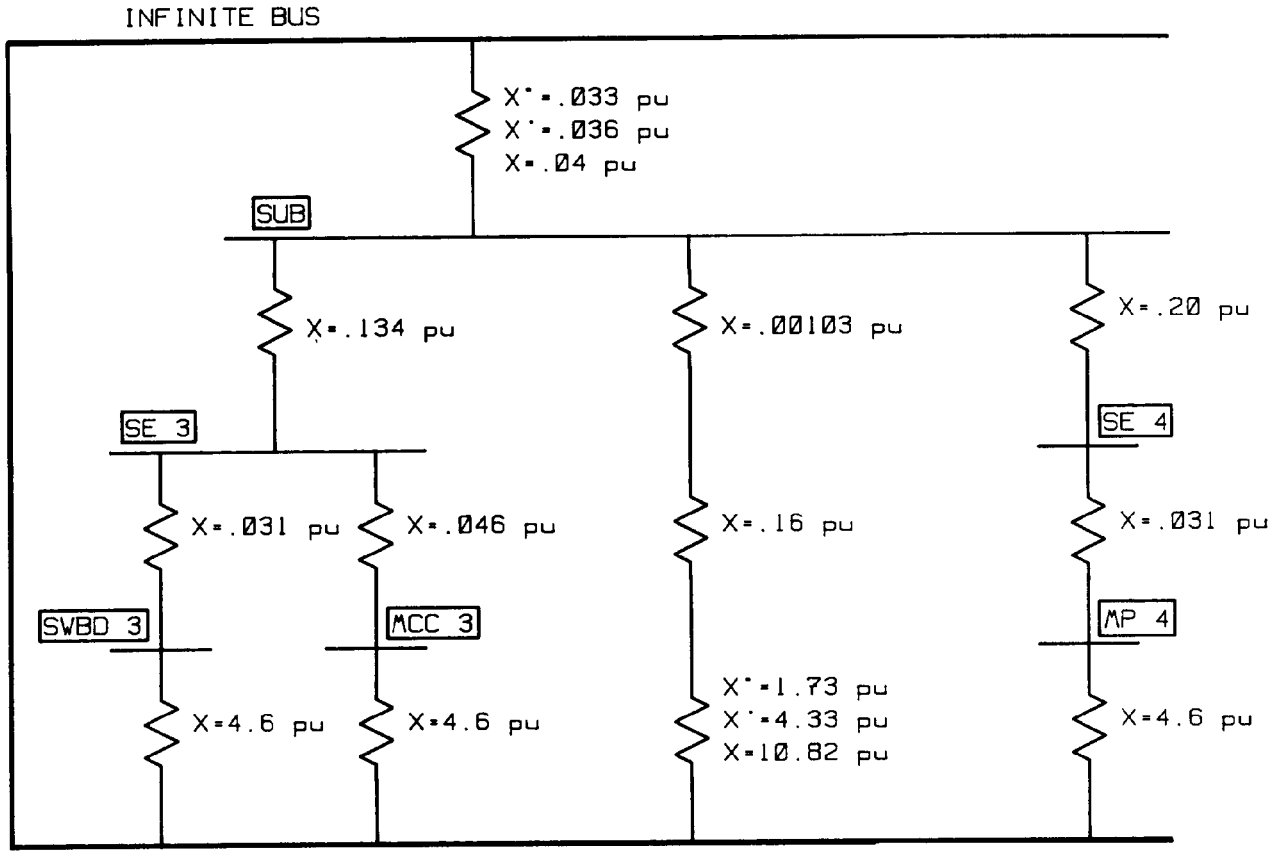

CONSIDER A FAULT AT MP 4 BUS.

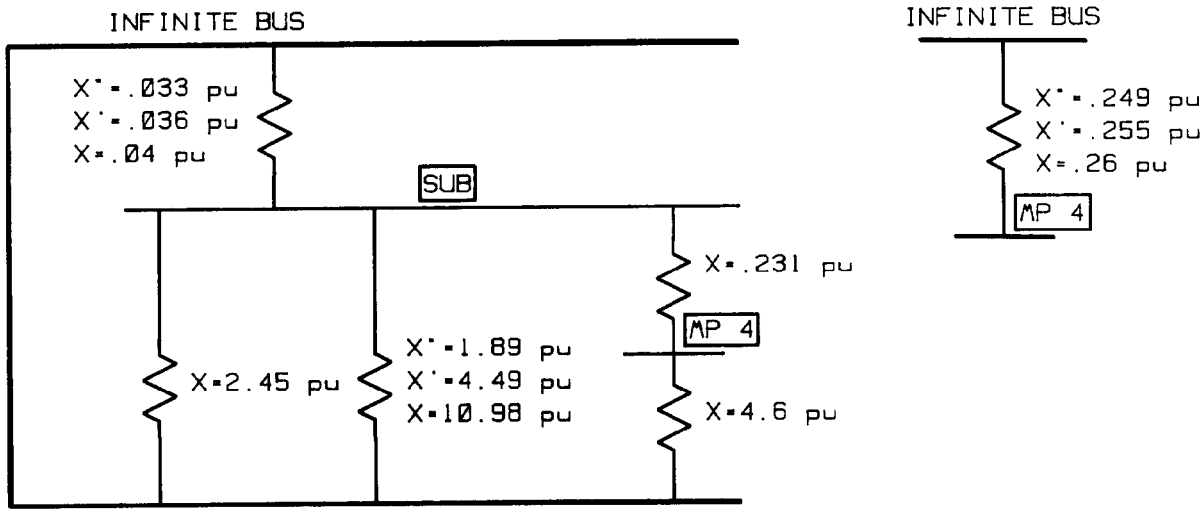

I_{BASE} = 2405.6 A

I''_{SC} = 2405.6/.249 = 9661 A

I'_{SC} = 2405.6/.255 = 9434 A

I_{SC} = 2405.6/.26 = 9252 A

US ARMY CORPS OF ENGINEERS

Figure G-21. Per unit diagram.

G-8. Example 6 — Medium-voltage (MV) fuse protection for transformers T3 and T4. See figures G-I, G-2, and G-3

a. General. For the single transformer installa--tions of T3 (figure G-2) and T4 (figure G-3), fuse manufacturers may supply recommended fuse ratings. To insure adequate fuse ratings, always select the smallest continuous current rating that will carry the load and tolerate temporary overloads without fuse damage. Figure G-8 shows the composite time-current curves for Example 1. This illustration also includes the curve for the transformer T4 primary fuse (FU-4). Figure G-13 shows the composite time-current curves for Example 2. This illustration also includes the curve for the transformer T3 primary fuse (FU-3). Since FU-3 and FU-4 protect their associated transformers, each fuse must be selected so that the rating is above and to the right of the transformer inrush point, and below and to the left of the transformer through-fault curves. Additionally, the fuse continuous current ratings must comply with the limits of NFPA 70. Referring to table 4-1, FU-3 and FU4 must not exceed 3.00 times transformer full-load amperes (FLA), since the transformers also have secondary protection. Although the primary voltage rating of transformers T3 and T4 is 12.4kV, the primary FLA is calculated on a 480V base. This value must be used because figures G-8 and G-13 are plotted using a 480V base.

$T3_{FLA} = (kVA)/(1.73)(kV) = (750)/(1.73)(.480) = 902.1A.$ (eq G-43)

$T3_{6X} = (T3_{FLA})(3) = 2706.3A$ ..... (eq G-44)

$T4_{FLA} = (kVA/(1.73)(kV) = (500)/(1.73)(.480) = 601.4A.$ (eq G-45)

$T4_{3X} = (T4_{FLA})(3) = 1804.2A$ ..... (eq G-46)

Locate the above NFPA 70 limits at the top of the appropriate time-current curves as shown in figures G-8 and G-13. The primary fuses time-cur-rent characteristic curves must conform to the following:

(1) Be greater than transformer FLA at 1000 seconds (steady-state).

(2) Not exceed (3.00)(FLA) at 1000 seconds.

(3) Be above and to the right of the transformer inrush point.

(4) Be below and to the left of the transformer through-fault curve.

(5) Coordinate with downstream devices.

b. As can be seen from the time-current curves of figures G-8 and G-13, meeting all the above requirements is difficult or sometimes impossible. Figures G-8 and G-13 show some overlap with the transformer secondary circuit breaker protection curves. Also, the fuse curves exceed the NFPA 70 limits and the through-fault protection curves. To satisfy protection and coordination requirements, the circuit breaker ratings should be reduced and smaller primary fuses should be specified.

G-9. Example 7 — Medium-voltage (MV) motor-circuit protection with reduced-voltage motor controller (RVMC). See figure G-1

a. General. It is assumed that a wye-delta type reduced voltage motor controller is used. Closed-circuit transition is recommended to minimize inrush voltage disturbances.

b. Starting current is 33.3 percent of the starting current using full-voltage starting. For large motors—

$M5_{FLA} = (kVA)/(1.73)(kV) = (500)/(1.73)(4.16) = 69.4A.$ (eq G-47)

$M5_{LRA} = M5_{FLA}/Xd'' = 69.4/.2 = 347A.$ (eq G-48)

$T5_{FLA} = (kVA)/(1.73)(kV)$ ..... (eq G-49)

$T5_{FLA} = (1000)/(1.73)(4.16) = 138.79A$ .. (eq G-49)

$T5_{3X} = (T5_{FLA})(3) = 416.37A$..... (eq G-50)

c. Figure G-22 shows composite time-current curves for the medium-voltage motor circuit supplied by transformer T5.

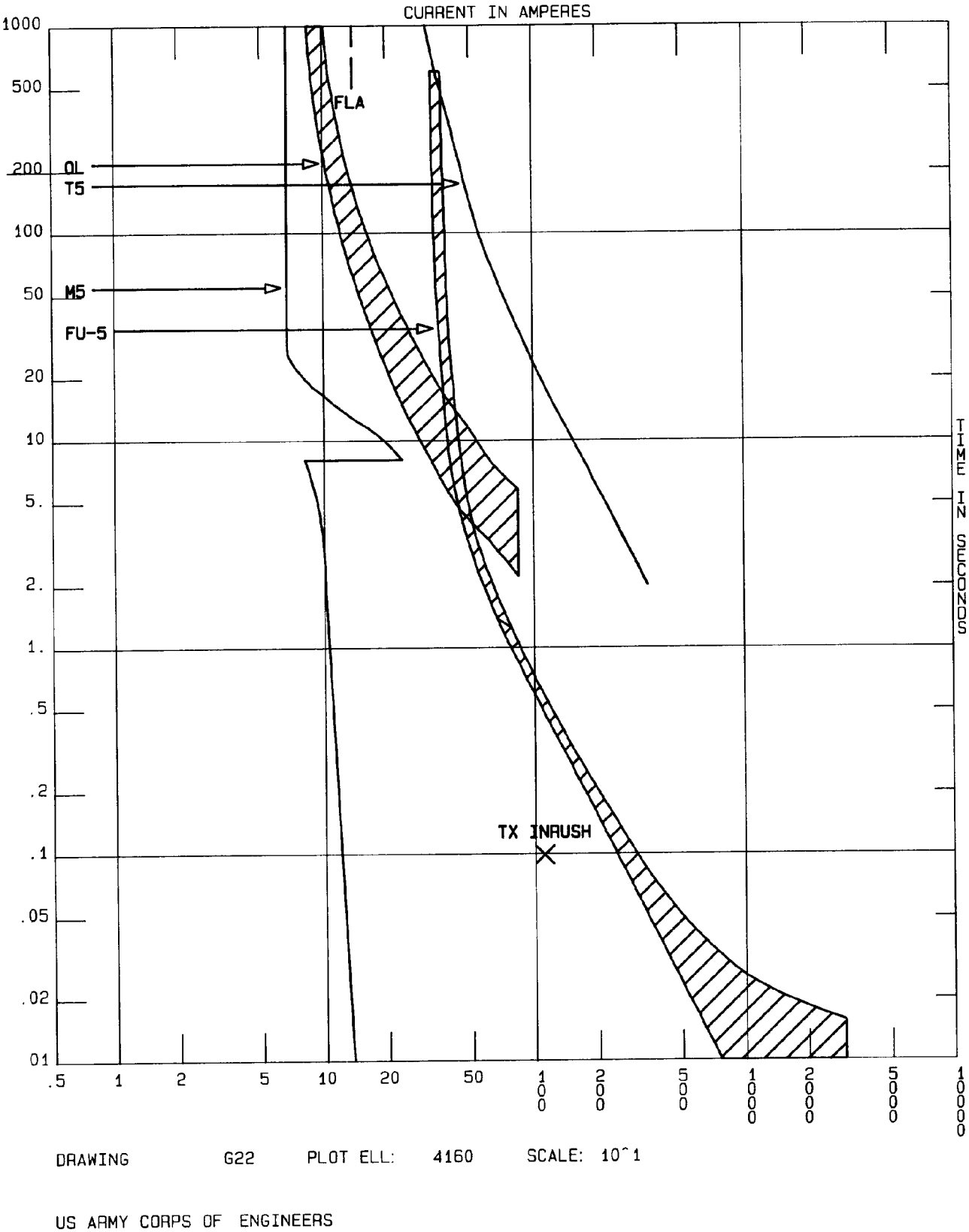

Figure G-22. M5 starting, overload, and fuse short-circuit curves.

G-10. Example 8—Medium-voltage (MV) generator protection

a. As shown in figure G-1, the example incorporates two 1250kVA, 13.8kV, on-site generators. These generators would be classified as multiple isolated generators as described in chapter 5 of this TM. The basic minimum protection is listed below.

b. Device 51V, voltage-controlled or voltage-restrained backup overcurrent relay. Short-circuits on generators usually result in low voltage. Thus when overcurrents are accompanied by low volt-age, the relay will operate. If overcurrent is not accompanied by low voltage, the condition is probably an overload and the generator remains connected since the relay will not operate. This allows the relay to be set lower than generator FLA.

c. Device 51G, backup ground time-overcurrent relay. Since the generator is grounded, a time overcurrent relay in the neutral circuit can be used in much the same manner as a transformer neutral ground relay. Care should be exercised in selecting line-to-line voltage rating on the potential transformers used for protection and synchronizing. Furthermore, a voltage relay would be used for ground detection on a high resistance grounded neutral. Where necessary, surge protection should be provided in the generator.

d. Device 87 and 87G, differential relays.

e. Device 32, reverse power relay for antimotoring protection.

f. Device 40, impedance relay, offset mho type for loss of field protection.

g. Device 81, under frequency relays can be used to drop load or sectionalize buses in order to keep remaining generation and load in operation during disturbances.

G-11. Example 9—Phase Overcurrent Protection Using Protective Relays

a. Figure G-22 shows the time-current curves for the medium-voltage motor circuit. As shown in figure G-1, this circuit is supplied by 15kV switchgear feeders number 5 and 6. Circuit breakers 5 and 6 in the 15kV switch-gear must be set above the rating of FU-5 to achieve coordination. Additionally, the tie-breaker and the main circuit breakers must coordinate with the feeder breakers. Since the tie-breaker and the main breakers are equally rated, relay tap and time dial settings can be adjusted to achieve coordination. Figure G23 shows the curves for FU-5, feeder breakers 5 and 6, tie-breaker 3, and main breaker 1 and 2. Selected settings are shown in table G-1.

Table G–1. Summary of device settings for figure G–23

Device	*Setting*
FU–5	100E
⅝	CT=200/5, tap=5.0, time dial=5.0, Inst=maximum
3	CT=1600/5, tap=3.0, time dial=3.0
½	CT=1600/5, tap=5.0, time dial=5.0

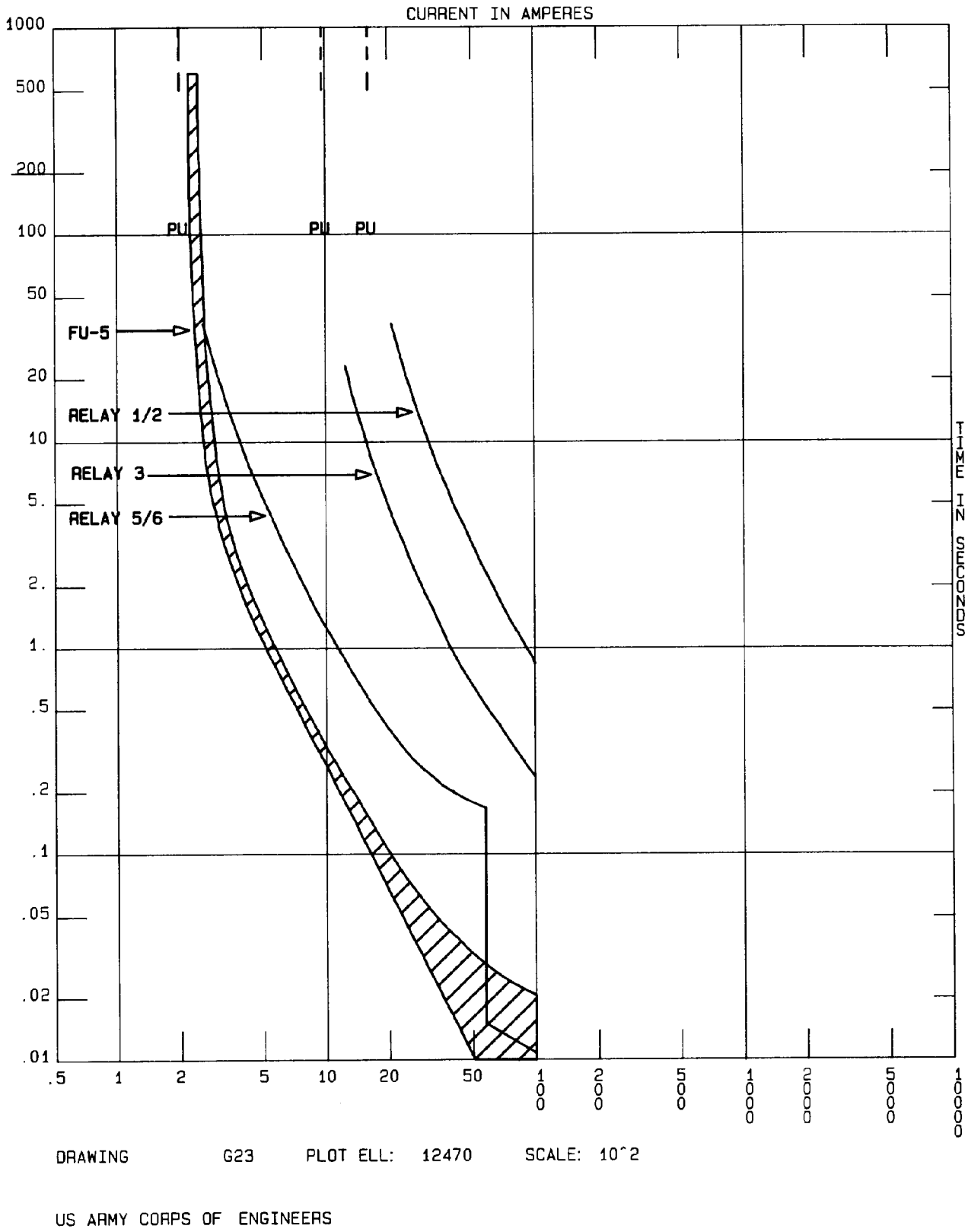

Figure G-23. Protective relays 1, 2, 3, 5, 6.

b. Figure G-24 shows the curves for main breakers 1 and 2, tie-breaker 3, and feeder breakers 4 and 7. Selected settings are shown in table G-2.

Table G-2. Summary of device settings for figure G-24

Device	*Setting*
4/7	CT=600/5, tap=3.0, time dial=3.0, inst=60.0
3	CT=1600/5, tap=3.0, time dial=3.0
½	CT=2000/5, tap=5.0, time dial=5.0

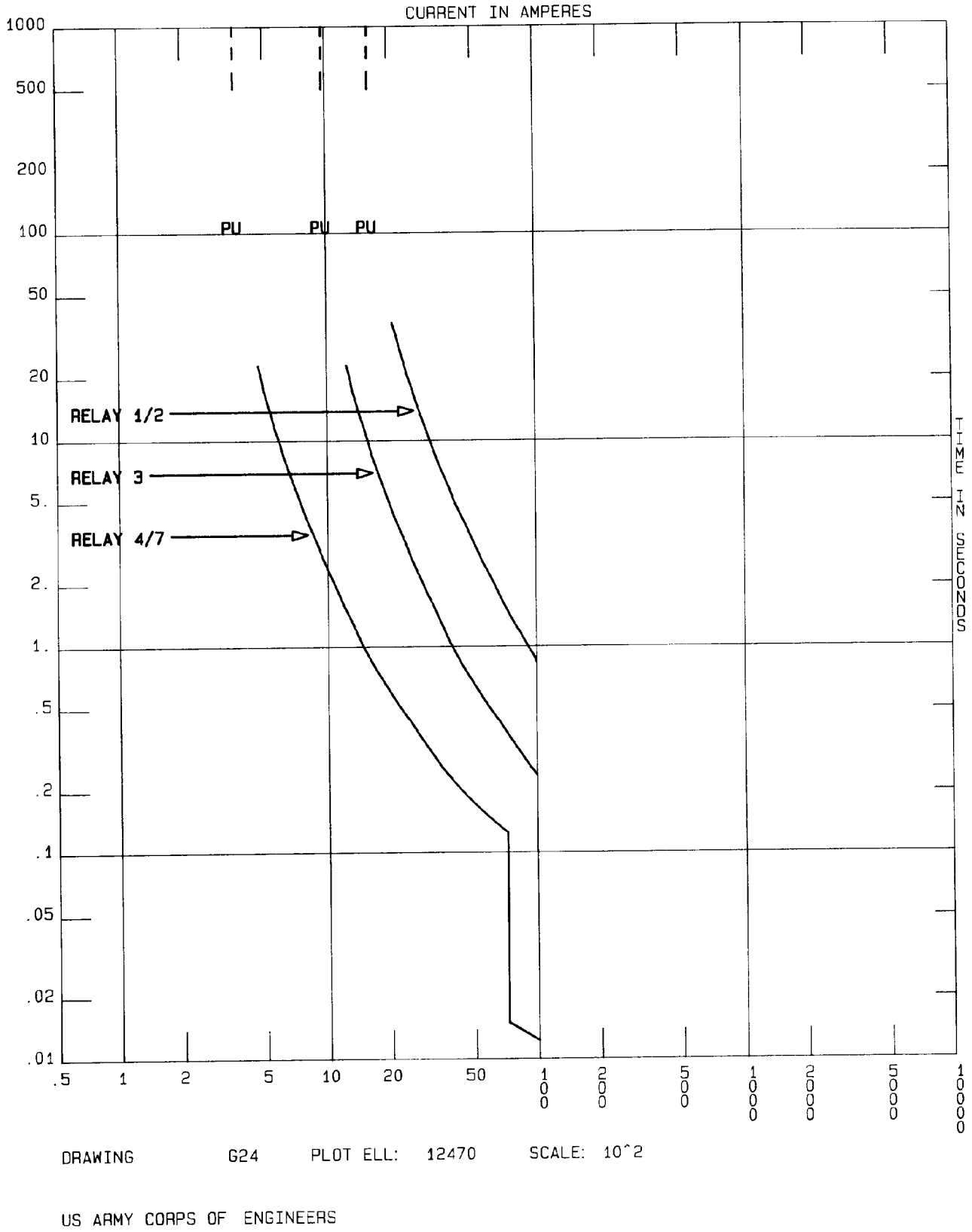

Figure G-24. Protective relays 1, 2, 3, 4, 7.

APPENDIX H

COMPUTER SOFTWARE APPLICATIONS

H-1. General

During the last decade, great advances have been made with the personal computer. From a hardware standpoint, memory capacities have increased, operating speeds have decreased, and costs have continued to decline. From a software standpoint, new programs continue to be developed. This new technology has become a very valuable tool to the electrical engineer.

H-2. Applications

Personal computer applications for the electrical engineer include computer-aided drafting and design (CADD), load analysis, lighting calculations, device scheduling, short-circuit calculations, and protective devices coordination. The personal computer is rapidly becoming a necessary engineering tool by extending the engineer's capabilities, improving the reliability of engineering designs, and reducing the time spent on a given project.

H-3. Costs

The cost of a personal computer and associated peripherals continues to decline. The cost is so low that any organization can now afford a personal computer. Software, however, can be very expensive, and a personal computer without software is of no value. Inexpensive engineering software programs are available, but are of little value.

H-4. Benefits

The benefits of a personal computer and sophisticated engineering software far outweigh the costs. In the past, electrical engineers were limited by the tedious, repetitive nature of engineering calculations. The personal computer has changed all that. Calculations that formerly took hours, or even days, to perform manually, now take only minutes. Not only can engineering calculations be completed in less time with the personal computer, but also with more accuracy. Advantages offered by the personal computer include:

a. Improved engineering capabilities.
b. Improved design reliability.
c. Reduced project time and manhour costs.
d. Improved accuracy.
e. Vastly improved documentation.
f. Improved project revision capabilities.

H-5. Future trends

The future will continue to offer faster computers, with larger memories, and more sophisticated engineering software. Manual or calculator-based engineering calculations are now obsolete. In the future, large electrical projects may be able to be designed completely by interfaced computer systems, with the final product generated by CADD technology. Engineers will never be replaced by computers, but computers will enable engineers to devote more of their time and energy to more creative projects, and less time to repetitive and tedious activities.

H-6. Protective devices coordination

There are many protective devices coordination programs available in the marketplace. These programs allow the designer to interactively coordinate protective devices at a personal computer workstation. With vast libraries of manufacturer's time-current characteristic curves and the flexibility and speed of a personal computer, the coordination problem can be solved more quickly and effectively than if done by hand. Most programs are capable of accepting user data for protective devices, and when used with a multi-colored pen plotter, the output from coordination software pro- duces excellent documentation. The time-current characteristic curves included in this TM were prepared using protective devices coordination software. Furthermore, most software programs also plot a single-line diagram along with the final output. Since we are still in the developing stages of this emerging technology, some software programs still have "glitches" which can give erroneous results. Engineers should be aware of this fact and manually check output plots until they have confidence in the software package. Refinement of software packages is an ongoing effort of software manufacturers, which will eventually eliminate all the "glitches." Most manufacturers are very receptive to user-supplied changes and suggestions.

BIBLIOGRAPHY

ANSI C37.100-1981, *Standard Definitions for Power Switchgear.*

DeWitt, William E., *Designing Low Voltage Motor Circuits, Parts 1 and* 2. SPECIFYING ENGINEER MAGAZINE, April and May, 1984.

Freund, Arthur, *Medium Voltage Switchgear—Air; Vacuum, or SF_6?,* E C & M MAGAZINE, October, 1985.

Ground-Fault Protection for Solidly-Grounded Low- Voltage Systems, General Electric Bulletin EESG 11-AP-7, December, 1974.

IEEE Std. 141-1986, Recommended Practice for Electric Power Distribution for Industrial Plants, IEEE, New York, 1986.

IEEE Std. 242-1986, Recommended Practice for Protection and Coordination of Industrial and Commercial Power Systems, IEEE, New York, 1986.

Industrial Power Systems Coordination Student Text E-9, General Electric Company, Training Division, Atlanta, GA., December, 1977.

Protective Relay Application & Seminar, General Electric Company, Philadelphia, PA.

Magnetic Current Relays, Thermal Overload Relays and External Reset Mechanisms, Square D Company, Bulletin 9055.

NEMA AB3-1984, Molded-case Circuit Breakers and Their Application, NEMA, Washington, DC, 1984.

NEMA 5G2-1986, High Voltage Fuses, NEMA, Washington, DC, 1986.

NEMA 5G3-1981, Low Voltage Power Circuit Breakers, NEMA Washington, DC, 1981.

Stevenson, William D., Jr., *Elements of Power System Analysis,* McGraw-Hill, New York, 1982.

Telander, S. H., *Circuit Breakers — Choosing The Right Type for Specific Applications.* CONSULTING-SPECIFYING ENGINEER MAGAZINE, (July, 1987).

GLOSSARY

Ampere rating

That current that the fuse will carry continuously without deterioration and without exceeding temperature rise limits specified for that fuse.

Arcing time

The arcing time of a fuse is the time elapsing from the melting of the current-responsive element (such as the link) to the final interruption of the circuit.

Class H fuses

Cartridge fuses were formerly known as "NEC dimensioned fuses." Class H fuses are tested and listed by Underwriters Laboratories, Inc., under their standard ANSI/UL 198B-1982 in 250 and 600 V ratings with interrupting capabilities of 10,000 A. Class H fuses are not marked as current limiting. UL standards for Class H fuses have a time-delay requirement of at least 10 s opening time at five times rating in order to have the words "time delay" on the label.

Class J fuses

These fuses are rated to interrupt 200,000 A ac and meet the standards of Underwriters Laboratories, Inc., for Class J fuses. They are UL-labeled as "current limiting," are rated only for 600 V (or less) ac, and are of dimensions not interchangeable with other classes. Class J fuses that have a time delay of at least 10 s opening time at five times rated current may have the words "time delay" on the label.

Class K fuses

These fuses meet ANSI/UL 198D-1982 of Underwriters Laboratories, Inc., for Class K as either K-1, K-S, or K-9. These standards have prescribed values for maximum peak let-through currents and I^2t for each subclass, with K-1 having the lowest (most restrictive) values and Class K-9 having the highest (least restrictive) values. Dimensionally the same as Class H fuses, these fuses have no UL-recognized "rejection feature." Their ac interrupting rating appears on their labels as 50,000,100,000, or 200,000 A. They are not labeled as “current limiting." The words "time delay," "dual element," letter "D," or phrase of similar significance on the label will indicate the manufacturer has met UL's optional testing for this feature. The use of Class K fuses permits equipment and circuits to be applied on systems having potential fault currents in excess of 10,000 A. Some hazards may exist in that they can be replaced with Class H fuses by uninformed personnel under present standards.

Class L fuses

These fuses meet ANSI/UL 198C-1981 of Underwriters Laboratories, Inc., for Class L fuses, have ratings in the range of 601-6000 A, are rated to interrupt 200,000 A ac, are rated only for 600 V or less ac, and are of specified dimensions larger than those of other fuses rated 600 V (or less). They are intended to be bolted to bus bars and are not used in clips. UP has no definition of time delay for Class L fuses; however, many Class L fuses have substantial overload time-current carrying capability. Class L fuse standards do not include 250 V ratings, dc testing, or dc ratings.

Class R fuses

These fused meet ANSI/UL 198E-1982 of Underwriters Laboratories, Inc., for Class R as either RK1 or RK5. Their interrupting ratings are 200,000 A ac. The standard has prescribed values for maximum peak let-through currents, I^2t and threshold current, with subclass RK1 having the lowest (most restrictive) values as compared to subclass RK5. These fuses have dimensions that provide a one-way physical rejection feature, that is, no other class of fuse will fit into equipment designed to employ Class R fuses; however, Class R fuses can be installed in older Class H or Class K equipment as replacement to upgrade these systems to the maximum allowed by other devices in the system. Class R fuses are available with or without time delay. If marked "time delay" or similar phrase, they are required to have a minimum opening time of 10 s when subjected to a load of five times rated current.

Continuous current

Standard molded-case circuit breakers are calibrated to carry 100% of their current rating in open air at a given ambient temperature (usually 25 or 40 degrees C). In accordance with the NEC, these breakers, as installed in their enclosures, should not be continuously loaded over 80% of their current

[1] Reprinted with permission from ANSI/IEEE Std. 242-1986, IEEE Recommended Practice for Protection and Coordination of Industrial and Commercial Power Systems, copyright 1986 by IEEE.

[2] Data courtesy of the National Electrical Manufacturers Association from NEMA Standards Publication AB 3-1984, copyright 1984 by NEMA.

rating. Low-voltage power circuit breakers and certain molded-case circuit breakers are specifically approved for 100% continuously duty. These breakers can be continuously loaded to 100% of their current rating in a 40 degree C ambient when installed in their proper enclosures.

Control voltage
This is the ac or dc voltage designated to be applied to control devices intended to open or close a circuit breaker. These devices can normally be supplied with a voltage rating needed to meet a particular control system.

Current limiter
A device intended to function only on fault currents of high magnitude and that may not successfully open on lesser overcurrents regardless of time. Such a device should always be used in series with a fuse, contactor, or circuit breaker to protect against overloads and low-level short circuits. Current limiters are typically added to molded-case circuit breakers, power circuit breakers, or instantaneous circuit protectors.

Current-limiting breaker
A circuit breaker that does not employ a fusible element and that when operating within its current range, limits the let-through I^2t to a value less than the I^2t of a ½ cycle wave of the symmetrical prospective current.

Current-limiting fuse
A fuse that will interrupt all available currents above its threshold current and below its maximum interrupting rating, limit the clearing time at rated voltage to an interval equal to or less than the first major or symmetrical loop duration, and limit peak let-through current to a value less than the peak current that would be possible with the fuse replaced by a solid conductor of the same impedance. Note that current-limiting action only becomes effective at a specific value of current. (See threshold current.) UL only recognizes and permits labeling of Classes G, J, L, R, CC, and T as current limiting, although Class K fuses are, in fact, current limiting.

Delay
This term is usually applied to the opening time of a fuse when in excess of one cycle, where the time may vary considerably between types and makes and still be within established standards. This word, in itself, has no specific meaning other than in manufacturers' claims (see time delay) unless published standards specify delay characteristics.

Dual-element fuse
A cartridge fuse having two or more current-responsive elements of different fusing characteristics in series in a single cartridge. This is a construction/design technique frequently used to obtain a time-delay response characteristic. Labeling a fuse as dual element means this fuse meets UL time-delay requirements (can carry five times rated current for a minimum of 10 s for Class H, K, J, and R fuses) and in this case defines a time-current repsonse characteristic and not necessarily a dual-element construction technique.

Dual magnetic
(Dashpot)(Hydraulic) On overload, the device operates on an inverse time principle by utilizing a magnetic coil surrounding a plunger which is restrained by air or liquid. As the magnetic field increases due to increased currents, the plunger increases its speed to unlatch the mechanism and open or trip the breaker in a shorter time. Short-circuit and high-level ground fault protection by dual magnetic breakers is the same as that provided by a thermal-magnetic breaker.

Ferrule
The cylindrical-shaped fuse terminal that also encloses the end of the fuse. In low-voltage fuses, the design is only used in fuses rated up to and including 60 A. The ferrule may be made of brass or copper, and may be plated with various materials.

Fuse-link
In British terminology only, a complete enclosed cartridge fuse; in such cases the addition of the carrier, or holder, completes the fuse. (See link.) In the US, a renewable fusible element for fuse cutouts.

Heating, air conditioning and refrigeration breaker (HACR)
The NEC permits the use of inverse-time circuit breakers to protect multimotor and combination-load installations involved in heating, air conditioning, and refrigerating (HACR) equipment provided the breakers have been approved for group installation. Circuit breakers complying with UP requirements for this type of application will be marked "Listed HACR Type."

High capacity breaker
The principle of operation is the same as the standard thermal-magnetic or solid-state breaker, but its current interrupting capability is much higher.

HRC
In British and Canadian terminology, high rupturing capacity, equivalent to US high interrupting capacity and generally indicating capability of interruption of at least 100,000 rms A for low-voltage fuses.

I^2t
The measure of heat energy developed within a circuit during the fuse's melting or clearing. Generally stated as melting I^2t or clearing I^2t.

Instantaneous only breaker (motor circuit protector or circuit interrupter)
Provides short-circuit protection only, with no overload protection. Since external overload protection must be used with these breakers, they cannot be used for branch circuit protection. These breakers are used primarily as components in motor circuits in combination with motor starters in motor control centers and individual combination motor starters. They are also used in welding equipment for short-circuit protection only.

Integrally-fused circuit breaker
A combination of a thermal-magnetic breaker with current-limiting fuses contained within the same molded housing. The fuse prevents the development of the maximum prospective short-circuit current in the circuit. With this combination, much higher interrupting ratings are possible than those for standard thermal-magnetic and high capacity breakers.

Interrupting rating-circuit breaker
The interrupting rating (or short-circuit current rating, as it is referred to for a low-voltage power circuit breaker) is commonly expressed in rms symmetrical amperes. It may vary with the ap- plied voltage and is established by testing per UL or ANSI standards.

Interrupting rating—fuse
A rating based upon the highest rms alternating current that the fuse is required to interrupt under the conditions specified. The interrupting ratings, in itself, has no direct bearing on any current-limiting effect of the fuse.

Link
The current-responsive element in a fuse that is designed to melt under overcurrent conditions and so interrupt the circuit. A renewal link is one intended for use in Class H low-voltage renewable fuses.

Melting time
The time required to melt the current-responsive element on a specified overcurrent. Where the fuse is current limiting in less than half-cycle, the melting time may be approximately half or less of the clearing time. (Sometimes referred to as pre-arcing.)

Molded case circuit breaker
A device, assembled as an integral unit in a supporting and enclosing housing of insulating material, designed to open and close a circuit by nonautomatic means, and to open the circuit automatically on a predetermined overcurrent, without injury to itself when properly applied within its rating.

Molded case switch
A device assembled as an integral unit in a supporting and enclosing housing of insulating material designed to open and close circuit by nonautomatic means.

NEC dimensions
Dimensions once stated in the National Electrical Code, but now found in ANSI/UL 198B-1982 and in ANSI/UL 198D-1982. These dimensions are common to Class H and K fuses and provide interchangeability between manufacturers for fuses and fusible equipment of a given ampere and voltage range.

One-time fuse
Strictly speaking, any nonrenewable fuse, but generally accepted and used to describe any Class H nonrenewable cartridge fuse, with a single (as opposed to dual) fusing element and intended to interrupt not over 10,000 A.

Overload
Generally used in reference to an overcurrent that is not of sufficient magnitude to be termed a short circuit. An overload is normally that overcurrent value from 100% of fuse rating up to ten times fuse rating. (See short circuit.)

Plug fuses
Plug fuses are rated 125 V and are available with current ratings up to 30 A. Their use is limited to circuits rated 125 V or less. However, they may also be used in circuits supplied from a system having a grounded neutral, and in which no conductor operates at more than 150 V to ground. The NEC requires type S fuses in all new installations of plug fuses because they are tamper resistant and size limiting, thus making it difficult to overfuse.

Peak let-through current
The maximum instantaneous current through a current-limiting fuse during the total clearing time. Since this is an instantaneous value, it may well exceed the rms available current, but will be less than the peak current available without a fuse in the circuit if the fault level is high enough for it to operate in its current-limiting mode.

Pre-arcing time
See melting time.

Renewable fuse
A fuse in which the element, usually a zinc link, may be replaced after the fuse has opened. Once a very popular item, this fuse is gradually losing popularity due to the possibility of using higher ampere-rated links or multiple links in the field, which can present a hazard.

Short-circuit current
An overcurrent usually defined as being in excess of ten times normal continuous rating. (See overload.)

Short-time rating
The short-time current rating specifies the maximum capability of a circuit breaker to withstand the effects of short-circuit current flow for a stated period, typically 30 cycles or less, without opening. This provides time for downstream protective devices closer to the fault to operate and isolate the circuit.

Solid-state (electronic)
On overload, the device operates on the inverse time principle. Current transformers or sensors are utilized in each pole of the breaker to sense the current. The solid-state circuitry measures and times the output from the current transformers. On overloads, short-circuits, or high-level ground faults, or both, the solid-state circuitry initiates an output to a delatching system. Also, this type of device can usually provide low-level ground fault protection.

Switching duty breaker (SWD)
Circuit breakers rated 15 or 20 amperes and intended to switch 277 volts or less fluorescent lighting loads on a regular basis. These breakers are marked "SWD".

Thermal-magnetic
The device provides overload, short-circuit and high-level ground fault protection. Overload sensing and tripping is obtained through the use of a bimetal, which is heated by the load current. During an overload condition, the bimetal deflects sufficiently to cause the breaker to trip or open mechanically. The larger the overload, the faster the tripping of the breaker; the smaller the overload, the longer it takes the breaker to trip. This is commonly called an inverse time principle. Short-circuit or high-level ground fault protection, or both, is obtained through electromagnetic action. If the fault current reaches a predetermined value, the breaker trips instantaneously; that is without any intentional time delay.

Threshold current
The magnitude of current at which a fuse becomes current limiting, specifically, the symmetrical rms available current at the threshold of the current-limiting range, where the fuse total clearing time is less than half-cycle at rated voltage and rated frequency, for symmetrical closing, and a power factor of less than 20%. Refer to various peak let-through current curves for each type of fuse. The threshold ratio is the relationship of the threshold current to the fuse’s continuous-current rating.

Time delay
Meaningless unless defined. This term is now used by NEMA, ANSI, and UL to mean, in Classes H, K, J, and R cartridge fuses, a minimum opening time of 10 s on an overload current five times the ampere rating of the fuse. Such a delay is particularly useful in allowing the fuse to pass the momentary starting overcurrent of a motor, yet not hindering the opening of the fuse should the overload persist. In Class G, CC, and plug fuses, the phrase "time delay” is required by UL to be a minimum opening time of 12 s on an overload of twice the fuse's ampere rating. The time-delay characteristic does not affect the fuse's short-circuit current clearing ability.

Total clearing time
The total time between the beginning of the specified overcurrent and the final interruption of the circuit, at rated voltage. It is the sum of the minimum melting time plus tolerance and the arcing time. For clearing times in excess of half-cycle, the clearing time is substantially the maximum melting time for low-voltage fuses.

Tube
The cylindrical enclosure of a fuse. Such a tube may be made of laminated paper, special fiber, melamine impregnanted glass cloth, bakelite, ceramic, glass, plastic, or other materials.

Voltage rating
The rms alternating current (or the direct current) voltage at which the fuse is designed to operate. All low-voltage fuses will function on any lower voltage, but use on higher voltages than rated is hazardous. For high short-circuit currents, the magnitude of applied voltage will affect the arcing and clearing times and increase the clearing I^2t values.

The proponent agency of this publication is the Office of the Chief of Engineers, United States Army. Users are invited to send comments and suggested improvements on DA Form 2028 (Recommended Changes to Publications and Blank Forms) direct to HQUSACE (CEMP-ET), WASH DC 20314-1000.

By Order of the Secretary of the Army:

CARL E. VUONO
General, United States Army
Chief of Staff

Official:
JOHN A. FULMER
Colonel, United States Army
Acting The Adjutant General

DISTRIBUTION:
To be distributed in accordance with DA Form 12-34E, block 4532 requirements for TM 5-811-14.

☆U.S. GOVERNMENT PRINTING OFFICE: 1991 287-780/40118

PIN: 046223-000